3724

CONTRACT NAS5–32500

Earth Observing System

EOS–AM SPACECRAFT PDR DATA PACKAGE

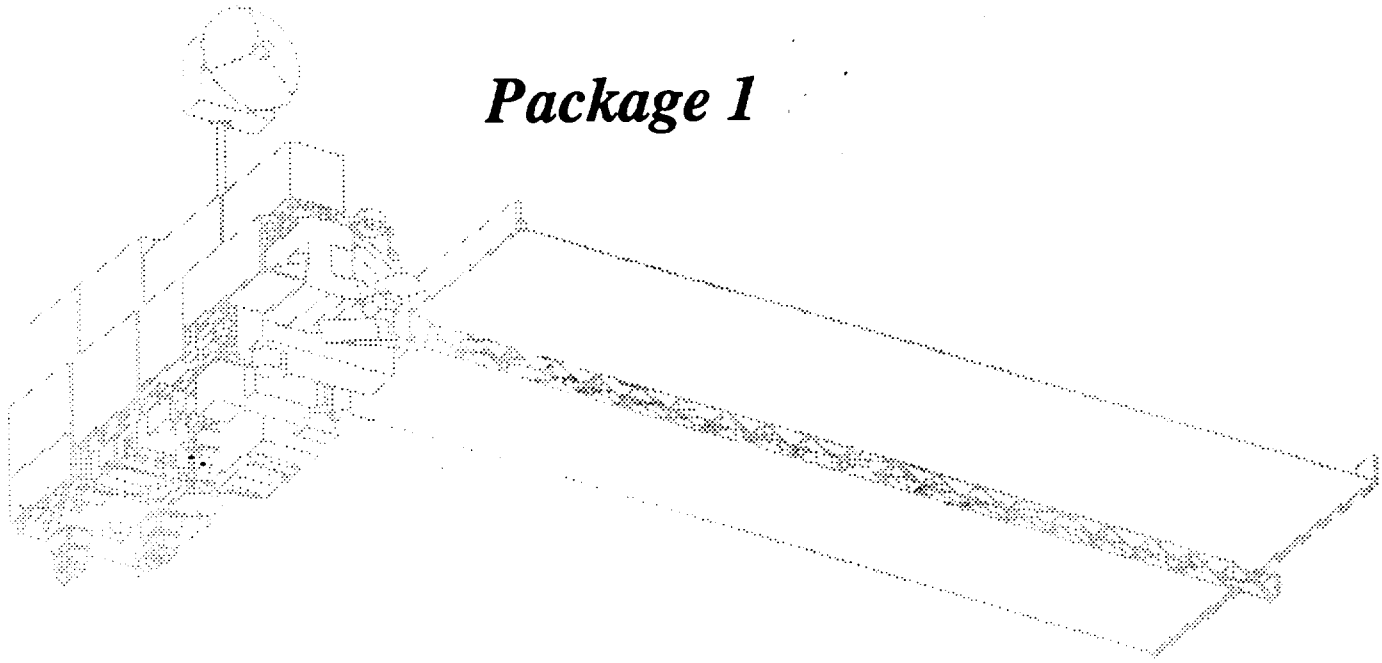

Package 1

28 APRIL 1993

MD-121: EOS-AM SPACECRAFT PDR DATA PACKAGE

DR/DN	TYPE	TITLE	REV	DOCUMENT	DATE
PACKAGE NO. 1				30 APRIL 1993	
SEP-101	1	Contract End Item (CEI) Specification for the EOS-AM Spacecraft	-	PS20005396	4/15/93
ICD-103	1	EOS-AM Spacecraft to Launch Vehicle Interface Reqrmnts Document	Prelim	IS20008503	4/30/93
ICD-104	1	Radio Frequency ICD Between EOS-AM S/C and STDN	-	IS20008504	3/31/93
PACKAGE NO. 2				8 JULY 1993	
EOS-DN	-	Baseline Description Document (BDD) for the EOS-AM S/C (Preliminary)	I	SE&I-010	6/10/93
EOS-DN	-	System Operating Modes	B	SE&I-001	5/21/93
SP-301	2	Performance Spec. Command & Data Handling S/S for EOS-AM S/C	-	PS20008567	6/28/93
SP-401	2	Performance Spec. Communications S/S for EOS-AM S/C	-	PS20008580	6/30/93
SP-501	2	Performance Spec. Electrical Power S/S for EOS-AM S/C	-	PS20004749	6/28/93
SP-741	2	Performance Spec. Electrical Accommodations S/S for EOS-AM S/C	-	PS20008636	7/6/93
SP-861	2	Critical Item Devlpmt. Spec. High Gain Antenna Assembly for EOS-AM S/C	-	PS20008513	10/16/92
SP-871	2	Critical Item Devlpmt. Spec. Solar Array Assembly for EOS-AM S/C	-	PS20008514	5/7/93
SEP-106	2	Electromaagnetic Compatibility (EMC) Control Plan for EOS-AMS/C	A	PN20005869	6/28/93
ICD-106	1	Interface Control Document (ICD) Data Format Control Book for EOS-AM S/C	Prelim	IS20008658	6/8/93
SD-110	2	EOS-AM S/C Flight Software System Requirements Specification	-	20008662	5/6/93
VRD-100	2	Verification Plan for the EOS-AM S/C	-	PN20005404	5/5/93

MD-121: EOS-AM SPACECRAFT PDR DATA PACKAGE (CONT.)

DR/DN	TYPE	TITLE	REV	DOCUMENT	DATE
Package No. 3				22 JULY 1993	
SP-101	2	Performance Spec. Structures & Mechanism S/S for EOS-AM S/C	-	PS20001415	7/16/93
SP-201	2	Performance Spec. Thermal Control S/S for EOS-AM S/C	-	PS20008549	7/20/93
SP-601	2	Performance Spec. Guidance, Navigation & Control S/S for EOS-AM S/C	-	PS20004937	7/21/93
EOS-DN	-	Housekeeping EM Layout Drawings	A	CNF-017	6/18/93
* EOS-DN	-	Launch/On-orbit Deployed Configuration Layout	A	CNF-018	7/8/93
* EOS-DN	-	Primary Structure Layouts	-	CNF-019	6/18/93
EOS-DN	-	Propulsion Module Layouts	-	CNF-020	7/7/93
* EOS-DN	-	Flight Operations Management Plan	-	FO-001	6/30/93

* Received previously

MARTIN MARIETTA

ASTRO-SPACE DIVISION
EAST WINDSOR, NJ

EOS-AM SPACECRAFT (S/C) CONTRACT DOCUMENT TRANSMITTAL

TO: National Aeronautics & Space Administration Goddard Space Flight Center - Bldg.16W-; Room N70 Care Of: R. Dorsey , Documentation Lib. Tech. (code 421) Greenbelt, MD 20771 Attn: EOS-AM S/C (GSFC) C.O. & EOS/GSFC Library (code 420)	EOS-AM S/C Program CONTRACT: NAS5-32500	IN REPLY REFER TO: EOSC- 0868 DATE: April 28, 1993

APPROVAL REQUIREMENTS: ☐ Type 1 requires approval of Technical Manager prior to implementation Approval Due Date _____ ☐ Type 2 time-limited right of disapproval (45 days after receipt) Approval Due Date _____ ☒ Type 3 Information Only	DR NO. MD-121 TITLE: *Spacecraft PDR Data Package (Package 1)* *Martin Marietta Document Number:* References: # of copies: 12

GSFC Distribution :

EOS Contracting Officer
J. King, Code 284.4: (letter only)

EOS GSFC Library, Code 420: 12 copies

REMARKS:

Outgoing GSFC Correspondence
OGC No: 93- 0293
Transmit Date: 4/29/93

Martin Marietta USE: Originator: Internal Distribution: EOS Document Center (2) Cover Sheet Only: Program Control/C. Gyursco Configuration Management/G. Rauscher	FROM: *Martin Marietta* Astro-Space Division/Nassau Park P. O. Box 800 Princeton, NJ 08543-0800 SIGNATURE: D. Supow D. Supow, Contract Manager

EOS Form 009-02/04/1993

MD-121: EOS-AM SPACECRAFT PDR DATA PACKAGE

DR/DN	TYPE	TITLE	REV	DOCUMENT	DATE
PACKAGE NO. 1				30 APRIL 1993	
SEP-101	1	Contract End Item (CEI) Specification for the EOS-AM Spacecraft	-	PS20005396	4/15/93
ICD-103	1	EOS-AM Spacecraft to Launch Vehicle Interface Reqrmnts Document	Prelim	IS20008503	4/30/93
ICD-104	1	Radio Frequency ICD Between EOS-AM S/C and STDN	-	IS20008504	3/31/93

PS20005396
CAGE No. 49671
15 April 1993

Contract End Item (CEI) Specification for the EOS AM Spacecraft (SEP–101)

Prepared under:
Contract NAS5–32500
NASA Goddard Space Flight Center
Greenbelt, Maryland 20771

Prepared by:
Martin Marietta Corporation
Astro Space
P.O. Box 800
Princeton, New Jersey 08543–0800

DCC041393

(This page intentionally left blank.)

Contract End Item (CEI) Specification for the EOS AM Spacecraft (SEP–101)

Prepared under:
Contract number NAS5–32500
NASA Goddard Space Flight Center
Greenbelt, Maryland 20771

Prepared by: _____
B. Erika Kohl
Systems Engineering and Integration

Approved by: _____
Scott Carey, Manager
Systems Engineering and Integration

Approved by: _____
Phil Guistino
EOS Program Manager

Approved by: _____
EOS Project GSFC

Prepared by:
Martin Marietta Corporation
Astro Space
P.O. Box 800
Princeton, New Jersey 08543–0800

(This page intentionally left blank.)

REVISION LOG

This log identifies those portions of this document which have been revised since the original issue. Revised portions of each page, for the current revision only, are identified by marginal striping.

Revision	Paragraph Number(s) Affected	Rev. Date	Approval
Initial Issue		April 15, 1993	CM/GSR

TABLE OF CONTENTS

SECTION / PARAGRAPH	TITLE	PAGE
1	INTRODUCTION	1
1.1	Scope	1
1.2	Background	1
2	APPLICABLE DOCUMENTS	3
2.1	EOS AM Project Documents	3
2.2	Other NASA Documents	4
2.3	Other Government Documents	4
2.4	Spacecraft Contractor Program Documents	5
2.5	Other Documents	5
3	DESCRIPTION AND REQUIREMENTS	7
3.1	Spacecraft Description	7
3.1.1	Mission Description	7
3.1.1.1	EOS Overview	7
3.1.1.2	AM Science Mission Definition	7
3.1.2	Spacecraft Description	9
3.1.2.1	Spacecraft Mission Profile	9
3.1.2.2	Major Spacecraft Characteristics	9
3.1.3	Instrument Set Description (Government Furnished Equipment)	11
3.1.3.1	Advanced Spaceborne Thermal Emission and Reflection Radiometer (ASTER)	11
3.1.3.2	Clouds and the Earth's Radiant Energy System (CERES)	11
3.1.3.3	Multiangle Imaging Spectro–Radiometer (MISR)	11
3.1.3.4	Moderate Resolution Imaging Spectroradiometer (MODIS)	11
3.1.3.5	Measurement of Pollution in the Troposphere (MOPITT)	11
3.1.4	Mission Operation	11
3.1.4.1	Mission Phases	13
3.1.4.2	System Operating Modes	15
3.1.4.3	Probability of Mission Success	18

TABLE OF CONTENTS (Continued)

SECTION / PARAGRAPH	TITLE	PAGE
3.1.5	Interface Requirements	19
3.1.5.1	Instrument Interfaces	19
3.1.5.2	EOS Data and Information System (EOSDIS) Interfaces	23
3.1.5.3	Tracking and Data Relay Satellite System (TDRSS) Interfaces	24
3.1.5.4	Ground Network (GN)	24
3.1.5.5	Direct Access System (DAS) User Ground Station Interfaces	24
3.1.5.6	Launch Vehicle Interfaces	24
3.1.5.7	Spacecraft Processing Interfaces	24
3.1.5.8	EOS Ground System Test Support	24
3.1.6	Spacecraft Bus Functional Partitioning	24
3.1.6.1	Spacecraft Bus Subsystem Descriptions	25
3.1.6.2	Spacecraft Bus Major Assemblies	29
3.2	Spacecraft Bus Requirements	31
3.2.1	Functional Requirements	31
3.2.1.1	Instrument Interface Requirements	31
3.2.1.2	Science Data Handling	32
3.2.1.3	Operability	33
3.2.1.4	Navigation	35
3.2.1.5	Guidance and Orbit Control	36
3.2.1.6	Attitude Determination and Control	37
3.2.1.7	Communications	38
3.2.1.8	Command and Data Handling	43
3.2.1.9	Reserved	44
3.2.1.10	Reserved	44
3.2.1.11	Reserved	44
3.2.1.12	Structure	44
3.2.1.13	Failure Detection/Correction	45
3.2.1.14	Software	47
3.2.2	Physical Characteristics	48
3.2.2.1	Mass Properties	48

TABLE OF CONTENTS (Continued)

SECTION / PARAGRAPH	TITLE	PAGE
3.2.2.2	Spacecraft Coordinate System	48
3.2.3	Reliability	48
3.2.3.1	Mission Success	48
3.2.3.2	Reserved	49
3.2.3.3	PAR Compliance	49
3.2.4	I&T Accommodations	49
3.2.4.1	General	49
3.2.4.2	Susceptibility	49
3.2.4.3	Maintenance Equipment	50
3.2.4.4	Component Maintainability	51
3.2.5	Environment Conditions	51
3.2.5.1	Environments	51
3.2.5.2	Reserved	51
3.2.5.3	Electromagnetic Radiation	52
3.2.5.4	Operational Constraints	52
3.2.6	Transportability	52
3.2.6.1	Transportation Environment	52
3.2.6.2	Handling Features	52
3.3	Design and Construction	52
3.3.1	Materials, Processes, and Parts	52
3.3.1.1	Material Selection Documentation	52
3.3.1.2	Material Selection Criteria	53
3.3.1.3	Reserved	53
3.3.1.4	Reserved	53
3.3.1.5	Reserved	53
3.3.2	Nameplates and Product Marking	53
3.3.2.1	Non–Flight Equipment Marking	53
3.3.2.2	Component Labeling Visibility	53
3.3.2.3	Identifiability of Wires, Cable, and Fluid Lines	53
3.3.2.4	Labeling of Test and Adjustment Points	53

TABLE OF CONTENTS (Continued)

SECTION / PARAGRAPH	TITLE	PAGE
3.3.2.5	Design/Marking for Orientation	53
3.3.3	Interchangeability	53
3.3.4	Fracture Control	54
3.3.5	Safety	54
3.3.5.1	General	54
3.3.5.2	Hazard Control	54
3.3.5.3	Material Safety	55
3.3.5.4	Component Safety	55
3.3.6	Human Performance/Human Engineering	55
3.3.6.1	Workmanship	55
3.4	Precedence	56
3.4.1	Precedence of Design Criteria	56
3.5	Reserved	56
3.6	Reserved	56
3.7	Subsystem and Major Assembly Requirements	56
3.7.1	Subsystem Requirements	56
3.7.1.1	General Subsystem Requirements	56
3.7.1.2	Electrical Power Subsystem (EPS)	65
3.7.1.3	Thermal Control Subsystem (TCS)	67
3.7.1.4	Guidance, Navigation, and Control Subsystem (GN&CS)	69
3.7.1.5	Communications Subsystem (COMS)	72
3.7.1.6	Command and Data Handling Subsystem (C&DHS)	74
3.7.1.7	Structure and Mechanisms Subsystem (SMS)	78
3.7.1.8	Propulsion Subsystem (PROPS)	81
3.7.1.9	Electrical Accommodations Subsystem (EAS)	82
3.7.1.10	Flight Software System (FSWS)	84
3.7.2	Major Assembly Requirements	85
3.7.2.1	General	85
3.7.2.2	Spacecraft Core	86
3.7.2.3	Propulsion Module	86

TABLE OF CONTENTS (Continued)

SECTION / PARAGRAPH	TITLE	PAGE
3.7.2.4	Solar Array	88
3.7.2.5	HGA	89
3.7.2.6	Power Module	90
3.7.2.7	GN&C Sensor Module	90
3.7.2.8	RWA Module	90
3.7.2.9	Communications/C&DH Module	90
3.7.2.10	Recorder Module	91
3.7.2.11	Direct Access Service (DAS) Panel	91
3.7.2.12	Battery Panel	91
4	QUALITY ASSURANCE PROVISIONS	93
5	NOTES	95
5.1	Acronym List	95

LIST OF FIGURES

FIGURE	TITLE	PAGE
1	EOS AM Spacecraft Specification Tree	2
2	Instrument Contribution to the Science Mission Objectives	8
3	EOS Spacecraft On–Orbit Configuration	10
4	EOS Mission Phase Flow Diagram	12
5	Mission Profile	14
6	Phase and Mode Transitions	16
7	Spacecraft Bus Relationship to EOS Program Elements	20
8	Spacecraft Interfaces with Other Space/Ground Operating Elements	21
9	System Functional Interface Diagram	26
10	EOS AM Spacecraft – Major Assemblies	87

LIST OF TABLES

TABLE	TITLE	PAGE
I	EOS Operating Modes	13
II	Subsystems Reliability	19
III	EOS AM Mission Instruments	20
IV	Navigation/Tracking Links	36
V	Forward (Command) Links	39
VI	Return (Telemetry and Science) Links	39
VII	Science Data Downlink Service Allocations	41
VIII	Flight Software Maximum Utilization	48
IX	Flight Firmware Maximum Utilization	48
X	Subsystem Mass Allocations	57
XI	Subsystem Power Allocations	58
XII	HGA Pointing Error Allocations	59
XIII	Pointing Knowledge Allocations at Instrument Interface	60
XIV	Pointing Accuracy Allocations at Instrument Interface	61
XV	Short-Term Pointing Stability/Jitter Allocations	62
XVI	Long-Term Pointing Stability/Jitter Allocations	63
XVII	Major Assembly Mass Allocations	88
XVIII	Major Assembly Power Allocations (One-Orbit-Averaged/EOL)	89

TBD LOG

ITEM	SECTION	PAGE	SUBJECT	RESP.	DUE
TBD–1	2.1	4	Contract Date for CERES UIID	GSFC	30 Apr 93
TBD–2	2.1	4	Contract Date for MISR UIID	GSFC	30 Apr 93
TBD–3	2.1	4	Contract Date for MOPITT UIID	GSFC	30 Apr 93
TBD–4	3.2.1.1.2.4	31	Spacecraft Bus Stability and Jitter	GSFC	S/C PDR
TBD–5	Table IX	58	Instrument Power Allocations by mode	GSFC	30 Jun 93
TBD–6	Table IX	58	S/C Total Power Allocations by mode	H. Bond	15 Nov 93

TBR LOG

ITEM	SECTION	PAGE	SUBJECT	RESP.	DUE
TBR–1	3.2.1.1.2.3	31	Age of ancillary data at delivery	GSFC	June 93
TBR–2	3.2.1.2.3	32	Required Storage Capacity for Recorder	GSFC	
TBR–3	3.2.1.2.5	33	Update RD to $2x10^{-7}$ BER	GSFC	June 93
TBR–4	3.2.1.5.1.1	37	Inject. Orbit Parameters (LV dependent)	GSFC	June 94
TBR–5	3.2.1.7.3.2	40	Omni Receive Link Margin	T. Milbourne	COMS CDR
TBR–6	Table X	57	Update RD req for Mgr Reserve	GSFC	June 93
TBR–7	Table XI	58	TCS Power Allocations by mode	H. Bond	15 Nov 93

1 INTRODUCTION

1.1 Scope

This specification establishes the functional, performance, and interface requirements for the Spacecraft Bus which hosts the Instrument set of the Earth Observing System AM (EOS AM) mission. Instrument performance requirements are not within the scope of this document.

1.2 Background

Spacecraft Bus requirements defined herein are intended to provide the first level requirements for EOS AM. This Contract End Item (CEI) Specification also allocates these requirements to subsystems and major assemblies. As such, this CEI Specification is supported by a hierarchy of lower–level specifications allocating the requirements defined herein to equipment modules, major assemblies, and components. This hierarchy is shown in Figure 1.

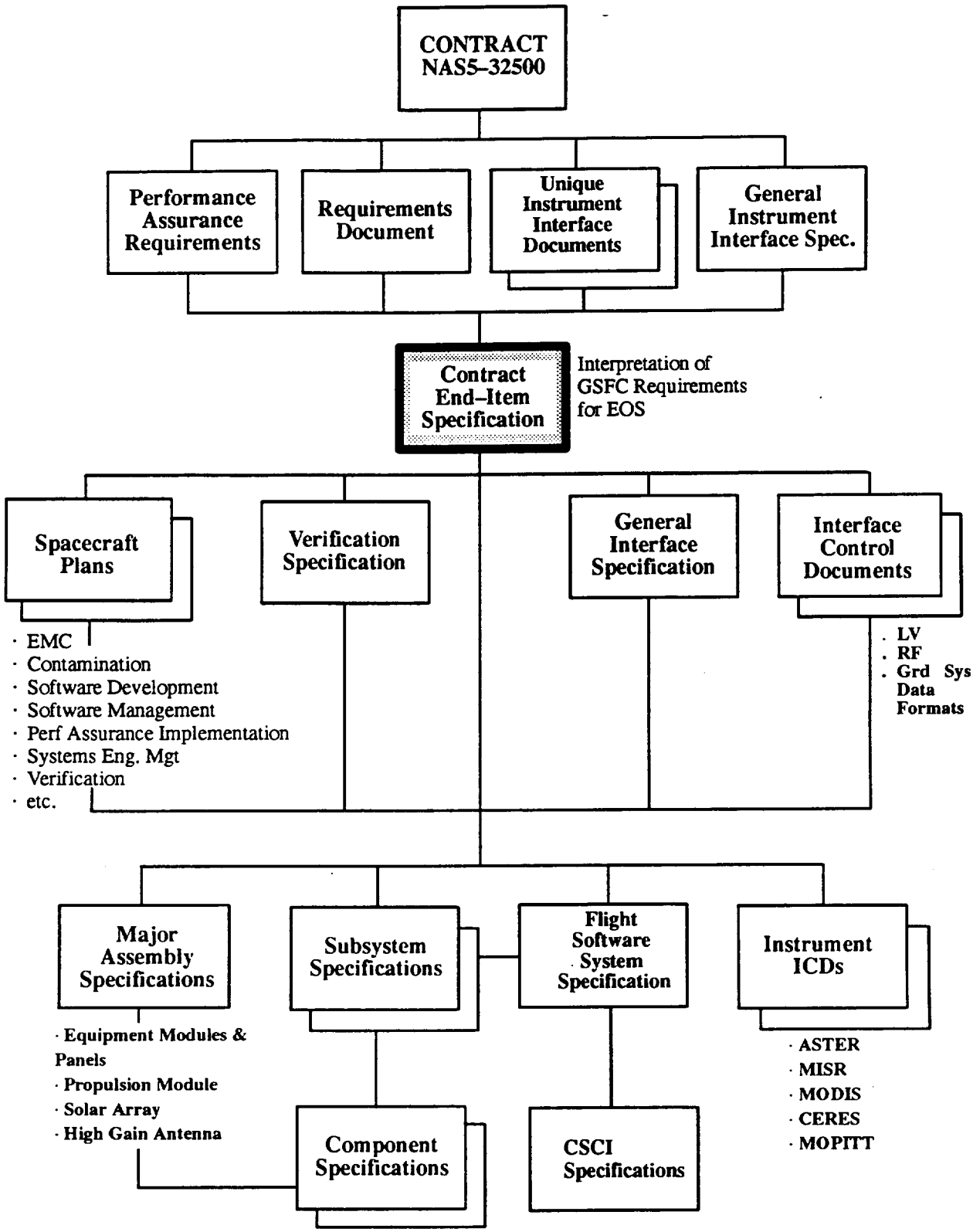

Figure 1. EOS AM Spacecraft Specification Tree

2 APPLICABLE DOCUMENTS

The following documents of the exact issue shown form a part of this document to the extent specified herein. If conflicts arise between documents, the superceding design requirements are those stated in the document nearest the top of the following list:

a. Requirements Document for the EOS AM Spacecraft (RD)

b. Performance Assurance Requirements for the EOS Observatories (PAR)

c. Unique Instrument Interface Documents

d. General Instrument Interface Specification (GIIS)

e. Contract End Item (CEI) Specification

f. External Interface Control Documents (ICDs) (e.g., EOS to Launch Vehicle, EOS to TDRSS, etc)

g. Subsystem and Major Assembly Specifications

h. Component Specifications

The General Interface Specification (GIS) is applicable only as invoked herein and in any subordinate specifications.

2.1 EOS AM Project Documents

420–03–02 1 December 1992	General Instrument Interface Specification (GIIS),
420–05–02 13 November 1992	Earth Observing System (EOS) Performance Assurance Requirements for the EOS AM–1 Spacecraft, Change CH–01
421–10–01 30 October 1992	Requirements Document for the EOS AM Spacecraft, Change 1
421–10–03 6 April 1992	EOS AM Project Spacecraft Bus Software Management Plan
421–12–11–01 29 January 1993	Unique Instrument Interface Document for the Advanced Spaceborne Thermal Emission and Reflection Radiometer (ASTER)
421–12–04–01 6 November 1992	Unique Instrument Interface Document for the Moderate–Resolution Imaging Spectroradiometer (MODIS) – Rev A

421–12–12–02 **(TBD–1)**	Unique Instrument Interface Document for the Clouds and the Earth's Radiant Energy System (CERES)
421–12–03–02 **(TBD–2)**	Unique Instrument Interface Document for the Multi–Angle Imaging Spectro–Radiometer (MISR)
421–12–15–02 **(TBD–3)**	Unique Instrument Interface Document for the Measurement of Pollution in the Troposphere (MOPITT)

2.2 Other NASA Documents

531–TR–001 October 1991	Users Spacecraft Clock Calibration System (USCCS) User's Guide
GSFC–731–0005–83, Rev. B	General Fracture Control Plan for Payloads Using the Space Transportation System (STS)
NASA–STD–2100–91 November 1991	NASA Software Documentation Standard
NHB 5300.4 (3A–1) December 1976	Requirements for Soldered Electrical Connections, Change 1
NHB 5300.4 (3G) April 1985	Requirements for Interconnecting Cables, Harnesses, and Wiring
NHB 5300.4 (3H) May 1984	Requirements for Crimping and Wire Wrap
NHB 5300.4 (3I) May 1984	Requirements for Printed Wiring Boards
NHB 5300.4 (3J) April 1985	Requirements for Conformal Coating and Staking of Printed Wiring Boards and Electronic Assemblies
NHB 5300.4 (3K) Jan. 1986	Requirements for Rigid Printed Wiring Boards and Assemblies
SMAP February 1989	NASA Software Acquisition Life Cycle, Version 4.0
STDN 101.2, Rev. 6 September 1988	Space Network (SN) User's Guide

2.3 Other Government Documents

ANSI/MIL–STD–1815A January 1983	Military Standard, Ada Programming Language

MIL–HDBK–5	Military Handbook, Metallic Materials and Elements for Aerospace Vehicle Structure, Rev. E, Change Notice 2
MIL–HDBK–17	Military Handbook, Polymer Matrix Composites, Vol. 1: Guidelines, Rev. B, Change Notice 1
MIL–STD–1522A	Standard General Requirements for Safe Design and Operation of Pressurized Missile and Space Systems
WSMCR 127–1 December 1989	Western Space and Missile Center Range Safety Specification
N/A	Joint Eastern/Western Space and Missile Center (ESMC/WSMC) Policy for Ground Transportation/ Handling of Hazardous Materials and Pressurized Vessels used on Missiles and Space Vehicles
N/A	Joint Eastern/Western Space and Missile Center (ESMC/WSMC) Policy for Encapsulated Payloads

2.4 Spacecraft Contractor Program Documents

PN20005397 18 March 1991	Performance Assurance Implementation Plan
PN20005869 15 January 1993	Electromagnetic Compatibility (EMC) Control Plan for the EOS–AM Spacecraft, SEP–106
IS20008501 30 December 1992	General Interface Specification (GIS) for the EOS AM Spacecraft, ICD–101
IS20008503 2 November 1992	EOS AM Spacecraft to Launch Vehicle Interface Requirements Document
IS20008504 31 March 93	Radio Frequency Interface Control Document between the EOS AM Spacecraft and the Spaceflight Tracking and Data Network
IS20008658 26 August 92	EOS–AM Spacecraft Data Format Control Book Interface Control Document

2.5 Other Documents

N/A April 1992	Mission Planners Guide for the Atlas Launch Vehicle Family, Revision 3
Source:	General Dynamics Commercial Launch Services, Inc. 9444 Balboa Ave, Suite 200 San Diego, CA 92123

MCR–86–2541 August 1990	Titan IV Users Handbook, Rev. A
Source:	Martin Marietta Astronautics Group P.O. Box 179 Denver, Colorado 80201
CCSDS 201.0–B–1 January 1987	Recommendations for Telecommand, Part 1, Channel Service
CCSDS 202.0–B–1 January 1987	Recommendations for Telecommand, Part 2, Data Routing Service
CCSDS 203.0–B–1 January 1987	Recommendations for Telecommand, Part 3, Data Management Service
CCSDS 301.0–B–1 January 1987	Recommendations for Time Code Formats
CCSDS 701.00–B–1 Issue 1, October 1989	Recommendations for Advanced Orbiting Systems, Networks and Data Links
Source:	CCSDS Secretariat Communications and Data Systems Div. (Code–TS) National Aeronautics and Space Administration Washington, DC 20546

3 DESCRIPTION AND REQUIREMENTS

3.1 Spacecraft Description

Except in section 3.1.5, where it imposes interface requirements, section 3.1 is descriptive and does not levy requirements on the Spacecraft.

This section provides an overview of the EOS AM mission, Spacecraft Bus, and Instruments, defines the various phases of the mission and modes of the Spacecraft, and identifies the various interfaces between the Spacecraft Bus and other EOS elements. This establishes the context for the requirements specified in this document and in lower–tier documents.

3.1.1 Mission Description

3.1.1.1 EOS Overview

The Earth Observing System (EOS) Project is part of the US Global Change Research Program (USGCRP), which is itself part of an internationally coordinated Global Change Research Program. The goal of the international program is to advance the scientific knowledge of the entire Earth system through development of a deeper understanding of the system components and the interactions among them relative to the changing Earth system. More specifically, the goal of the USGCRP is to study climate and hydrological systems, biogeochemical dynamics, ecological systems and dynamics, solid Earth processes, and solar influences. The EOS AM mission goals are a subset of these.

3.1.1.2 AM Science Mission Definition

A key element of the EOS Project is the EOS AM Spacecraft. Each EOS AM Spacecraft will collect data for a five–year period. The EOS AM Spacecraft supports the study of the physical climate system, including the Earth's radiation balance, atmospheric structure and circulation, mass and surface processes. It also supports study of the dynamics of terrestrial and marine ecosystems, their coupling to the physical climate system, and their influence upon the chemistry of the atmosphere.

Each AM Set Instrument contributes to the science mission goals. Figure 2 shows the relationship of the USGCRP objectives to the measurements to be taken by the EOS Program Instruments. The boxes which are not shaded represent those Instruments, measurements and goals applicable to the EOS AM mission. The Advanced Spaceborne Thermal Emission and Reflection Radiometer (ASTER) provides data on surface mineralogy, soil properties, surface temperature, and geothermal activity. The Clouds and the Earth's Radiant Energy System (CERES) measures the Earth's radiation budget and atmospheric radiation from the top of the atmosphere to the Earth's surface. The Moderate Resolution Imaging Spectroradiometer (MODIS) measures biological and physical processes for the study of terrestrial, oceanic, and atmospheric phenomena. The Multiangle Imaging Spectro–Radiometer (MISR) provides data on climatically–significant cloud covers, surface angular reflectance, spectral planetary and surface hemispherical albedo, aerosol and vegetative

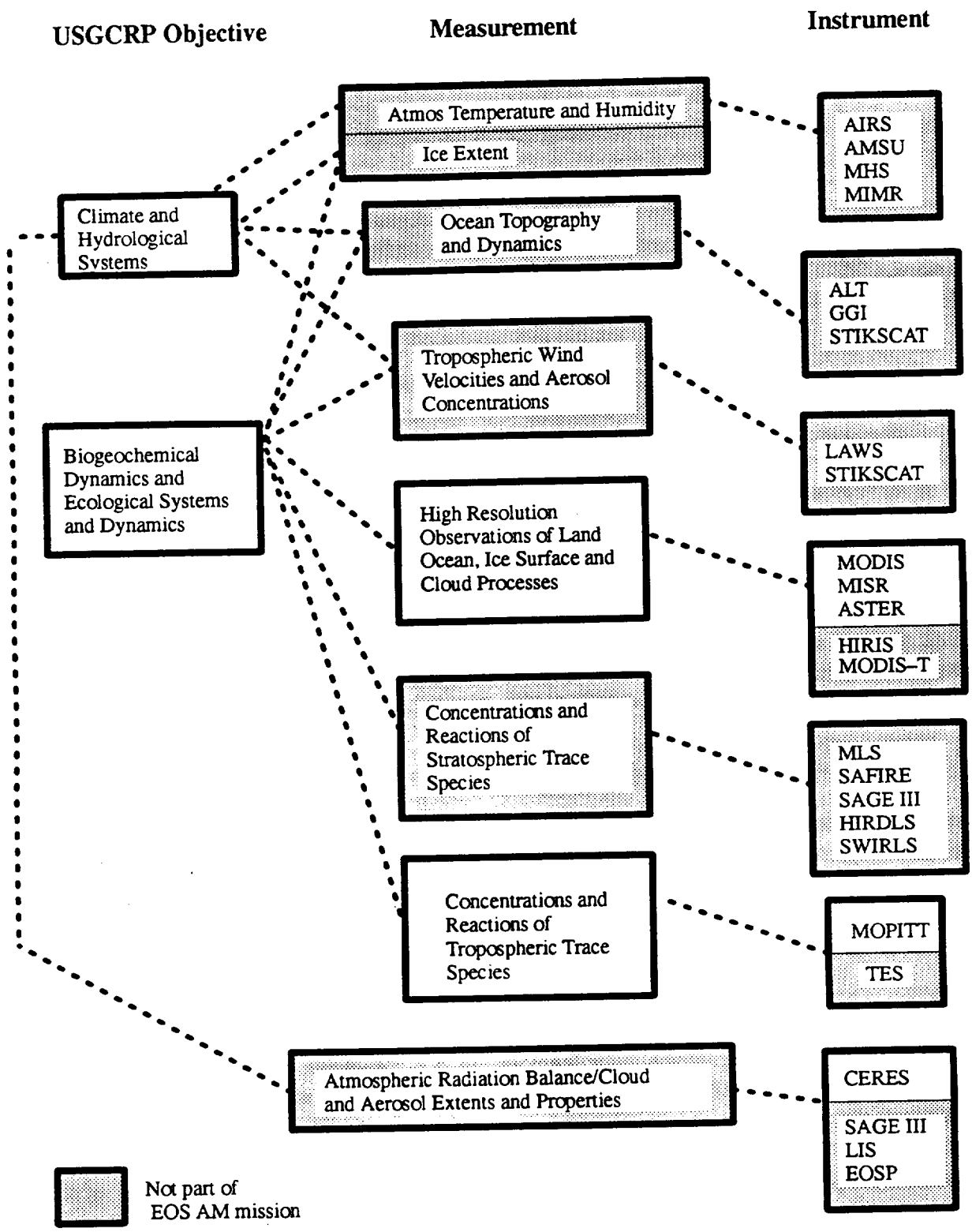

Figure 2. Instrument Contribution to the Science Mission Objectives

properties, and data needed to validate MODIS data and correct MODIS images for atmospheric effects. The Measurement of Pollution in the Troposphere (MOPITT) provides atmospheric profiles which will be used to determine how the lower atmosphere interacts with surface, ocean, and biomass systems.

3.1.2 Spacecraft Description

EOS AM is a fully integrated Spacecraft comprising several scientific Instruments and a Spacecraft Bus. The Instruments together collect all measurement data required to accomplish the EOS AM science mission. The Spacecraft Bus will provide the fields of view, pointing, structure, and stability required by the Instruments, together with the power, thermal, data handling, and communications resources required for their operation.

3.1.2.1 Spacecraft Mission Profile

The Spacecraft will be launched from Vandenberg AFB by an Intermediate Class launch vehicle which, for requirements definition purposes, is assumed to be an Atlas IIAS. The Spacecraft will, under ground control, utilize its own propulsion system to achieve the operational mission orbit from this injection orbit.

The mission orbit is maintained, through occasional ground-planned propulsive maneuvers, near-polar and nearly circular. The orbit is sun-synchronous with a nominal descending-node time of 10:30 AM. This provides the Instruments with the opportunity to observe any portion of the Earth on a periodic basis under nearly equivalent solar illumination conditions.

Instrument and Spacecraft Bus science operations are conducted autonomously by the Spacecraft in accordance with a scheduled uplink, nominally once per day, from the ground via the Tracking and Data Relay Satellite System (TDRSS). Collected science data is stored on board for downlink to the ground via TDRSS during pre-planned contacts. Uplink operations are normally performed concurrently with these science data downlinks. As a backup, the Spacecraft also supports real-time command operations and real-time downlink of science and housekeeping data via TDRSS, as well as command uplink, housekeeping data downlink, and science data downlink capabilities which are independent of TDRSS.

3.1.2.2 Major Spacecraft Characteristics

Figure 3 depicts the on-orbit configuration of the Spacecraft. The Spacecraft is constructed around a truss-like primary structure built of graphite-epoxy tubular members with titanium fittings. This lightweight structure provides the strength and stiffness needed to support the Spacecraft through the various mission phases, and to maintain accurate and stable alignment among various Spacecraft components. The Instruments are mounted on the nadir-pointing side so that they can view earth. Instrument temperatures are controlled either through local radiators or a capillary pumped heat transport system (CPHTS) which transports the heat from a coldplate mounted to the Instrument to radiators mounted on the cold space side of the Spacecraft. The zenith face of the Spacecraft is populated with Equipment Modules housing various Spacecraft Bus components. The Equipment

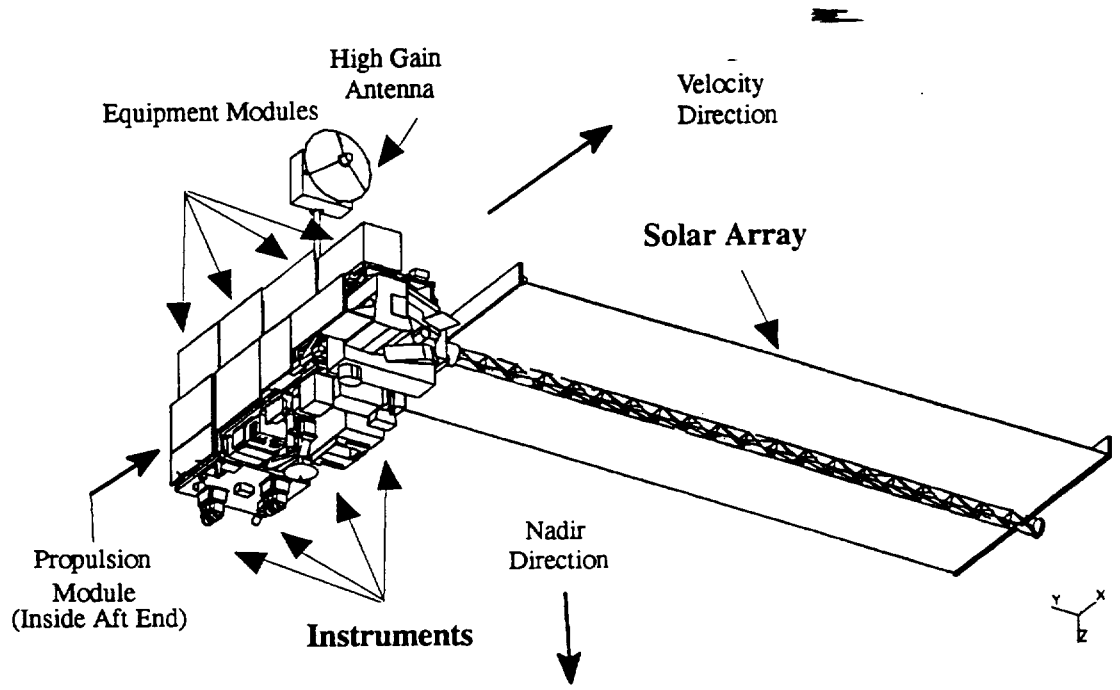

Figure 3. EOS Spacecraft On–Orbit Configuration

Modules are sized and partitioned to facilitate the pre-launch integration and test of the Spacecraft, and are generally covered with radiators and/or thermal blanketing to support management of the internal equipment temperatures.

A large single-wing solar array is deployed on the the sunlit side of the Spacecraft. This provides electrical power for Spacecraft operation while maximizing the cold-space FOVs available to the Instrument and Equipment Module radiators. Many of these radiators are located on the side of the Spacecraft opposite the solar array for maximum heat rejection efficiency.

The propulsion equipment is located inside the aft end of the Spacecraft, where it is installed as a unit.

A steerable dual–band (S and Ku) High-Gain-Antenna (HGA) and Ku–band electronics are mounted on a deployed boom extending from the zenith side of the Spacecraft. This maximizes the amount of time available for TDRSS communications via this antenna without obstruction by other parts of the Spacecraft. S–band omni–directional antennas extend from both the zenith and nadir sides of the Spacecraft. These hemispherical–pattern antennas ensure high–availability, all–attitude accessibility to the contingency and emergency communications links. An X–band Earth–coverage antenna is mounted on the nadir side to support direct–to–ground transmission.

3.1.3 Instrument Set Description (Government Furnished Equipment)

3.1.3.1 Advanced Spaceborne Thermal Emission and Reflection Radiometer (ASTER)

ASTER is an imaging radiometer operating from visible to thermal infrared regions. It includes three radiometer assemblies, called the Visible and Near Infrared (VNIR) Scanning Radiometer (VSR), the Short Wavelength Infrared Radiometer (SWIR), and the Thermal Infrared Radiometer (TIR). Also included are three support assemblies, the VNIR Electronics (VEL), Common Signal Processor (CSP), and Master Power Supply (MPS).

3.1.3.2 Clouds and the Earth's Radiant Energy System (CERES)

CERES consists of two identical broadband scanning radiometers, each in a separate assembly. One radiometer operates in the cross–track mode for limb–to–limb spatial coverage, and the other operates with a rotating scan plane to provide angular sampling.

3.1.3.3 Multiangle Imaging Spectro–Radiometer (MISR)

MISR is a pushbroom imager with charge–coupled device–based cameras, configured in a single assembly, looking forward, nadir, and aft along the Spacecraft ground path.

3.1.3.4 Moderate Resolution Imaging Spectroradiometer (MODIS)

MODIS is an imaging spectroradiometer, configured as a single assembly. It scans a cross–track swath, and senses spectral bands.

3.1.3.5 Measurement of Pollution in the Troposphere (MOPITT)

MOPITT is a scanning radiometer which senses upwelling infrared radiation in several CO and CH_4 bands. It is housed in a single assembly.

3.1.4 Mission Operation

The Spacecraft Bus will meet the requirements of all phases of the Spacecraft mission as defined in this document. Transitions between the phases depicted in Figure 4 will be conducted after the occurrence of each of the indicated phase transition criteria. Within each phase, the Spacecraft Bus will support the Spacecraft operating modes applicable to that phase as defined herein and as summarized in Table I.

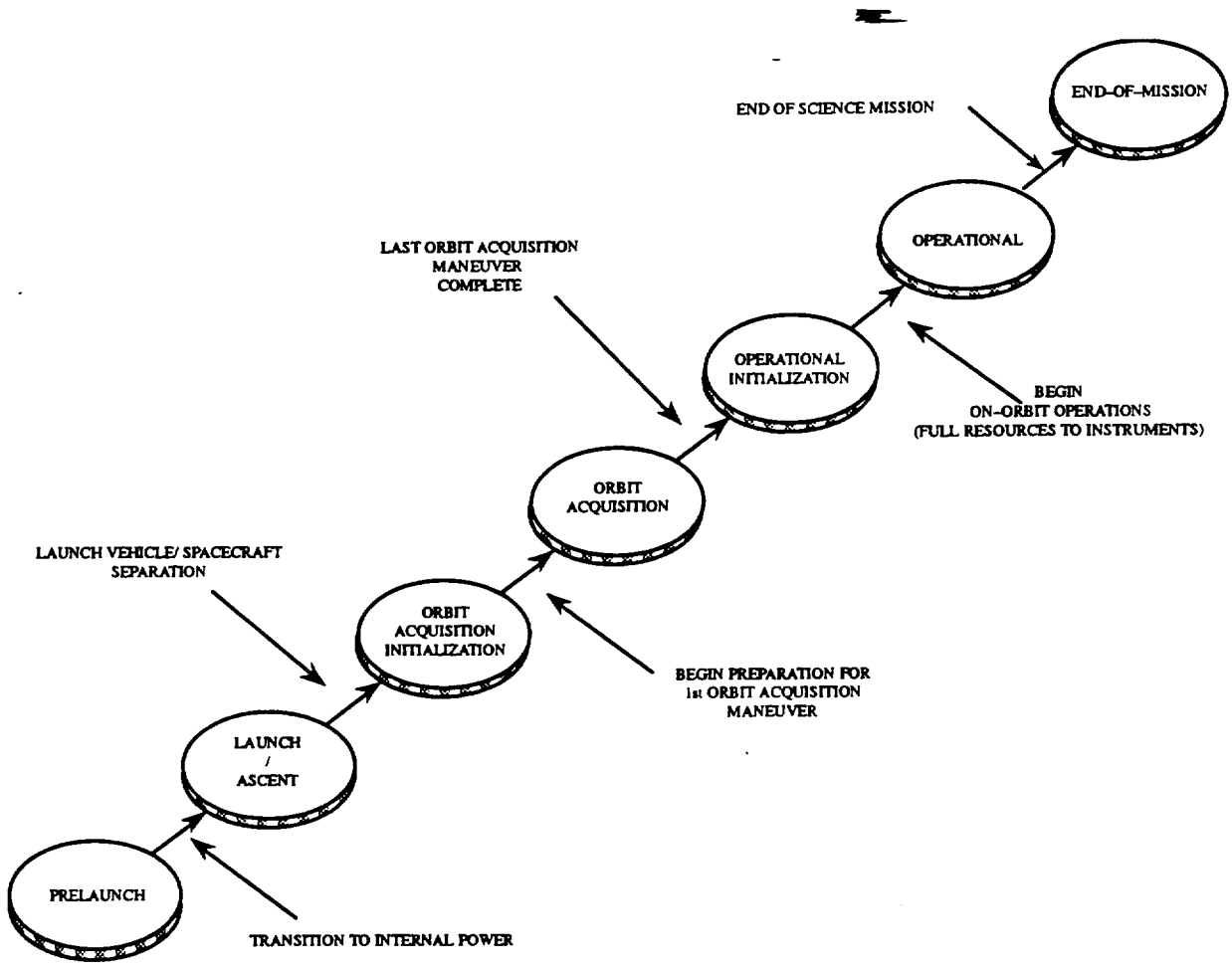

Figure 4. EOS Mission Phase Flow Diagram

Table I. EOS Operating Modes

Mission Phase	Primary Operating Modes	Backup Operating Modes
Prelaunch	Ground Test	
Launch/Ascent	Launch	Safe
		Ground Test
Orbit Acquisition Initialization	Launch	Safe
	Stand–by	Survival
Orbit Acquisition	Standby	Safe
	Delta–V	Survival
Operational Initialization	Standby	Survival
	Delta–V	Safe
	Science	
Operational	Science	Survival
	Delta–V	Safe
		Standby
End–of–Mission	Survival	Safe

3.1.4.1 Mission Phases

The primary events occurring in each phase are summarized in Figure 5.

3.1.4.1.1 Prelaunch Phase

The Prelaunch Mission Phase starts with the integration of the Spacecraft with the launch vehicle and ends with the transition to internal power. This mission phase includes all final countdown activities to prepare the flight vehicle system for launch/ascent.

3.1.4.1.2 Launch/Ascent Phase

The Launch/Ascent Mission Phase starts with the transition to internal power and ends when the Spacecraft separates from the launch vehicle in the injection orbit. This mission phase includes all activities needed to transfer the Spacecraft to the injection orbit, and to separate the Spacecraft from the launch vehicle.

3.1.4.1.3 Orbit Acquisition Initialization Phase

The Orbit Acquisition Initialization Mission Phase starts immediately after the Spacecraft separates from the launch vehicle and ends upon ground initiation of preparation for the first delta–V maneuver. This mission phase includes activities to acquire and maintain a power/thermal safe

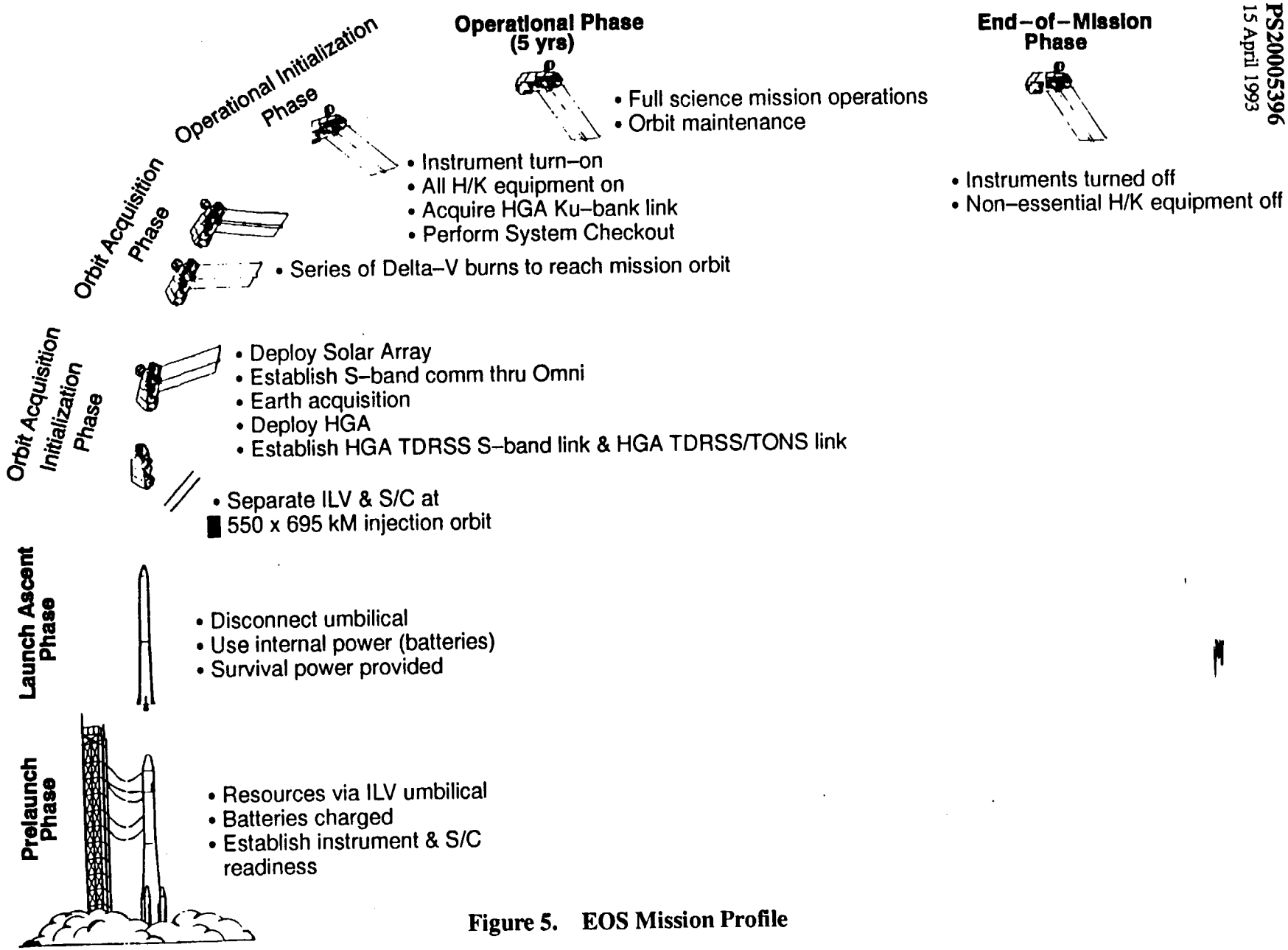

Figure 5. EOS Mission Profile

Earth–referenced stable attitude, to establish a positive energy balance, to establish S–band communications links, to support any initial check–out activities deemed necessary, and to obtain on–board orbit and attitude state vector estimates.

3.1.4.1.4 Orbit Acquisition Phase

The Orbit Acquisition Mission Phase starts upon ground initiation of the Spacecraft preparations for the first delta–V maneuver and ends at the completion of the final orbit acquisition delta–V maneuver. This mission phase includes activities to maintain a power/thermal safe Earth–referenced stable attitude, to perform orbit acquisition delta–V maneuvers, and to maintain both a positive energy balance and S–band communications links.

3.1.4.1.5 Operational Initialization Phase

The Operational Initialization Mission Phase starts at the completion of the final orbit acquisition hydrazine engine delta–V maneuver and ends when the Spacecraft attains the operational orbit, begins providing full resources to Instruments, and completes successful Instrument checkout. This mission phase includes activities to maintain a power/thermal safe Earth–referenced attitude, to perform orbit trim maneuvers, to perform Spacecraft Bus and Instrument checkout functions, to acquire the TDRSS K–band link, and to bring the Spacecraft to the full operational configuration.

3.1.4.1.6 Operational Phase

The Operational Mission Phase starts when the Spacecraft Bus begins providing full resources to Instruments and completes successful Instrument checkout and ends with the decision to terminate the Operational Phase. This mission phase includes activities to maintain an Earth–referenced operational attitude, to maintain the operational orbit, to acquire and maintain communications links, to provide an Earth–referenced safing capability, to support system checkout functions and to provide full resources to Instruments.

3.1.4.1.7 End–of–Mission Phase

The End–of–Mission Phase begins with the decision to terminate the Operational Mission Phase. No activities are required in this phase. The Spacecraft will be commanded into a survival state.

3.1.4.2 System Operating Modes

Figure 6 depicts the Spacecraft states and mode transitions in the various mission phases.

3.1.4.2.1 Ground Test Mode

In this mode the Spacecraft is essentially in a "check–out" state, receiving power via the Launch Vehicle T–0 umbilical. In this mode, the batteries are being charged, and equipment is powered as required for low rate commanding and telemetry. Telemetry is provided to the GSE via the T–0 umbilical. This mode is entered by ground command, following integration of the Spacecraft with

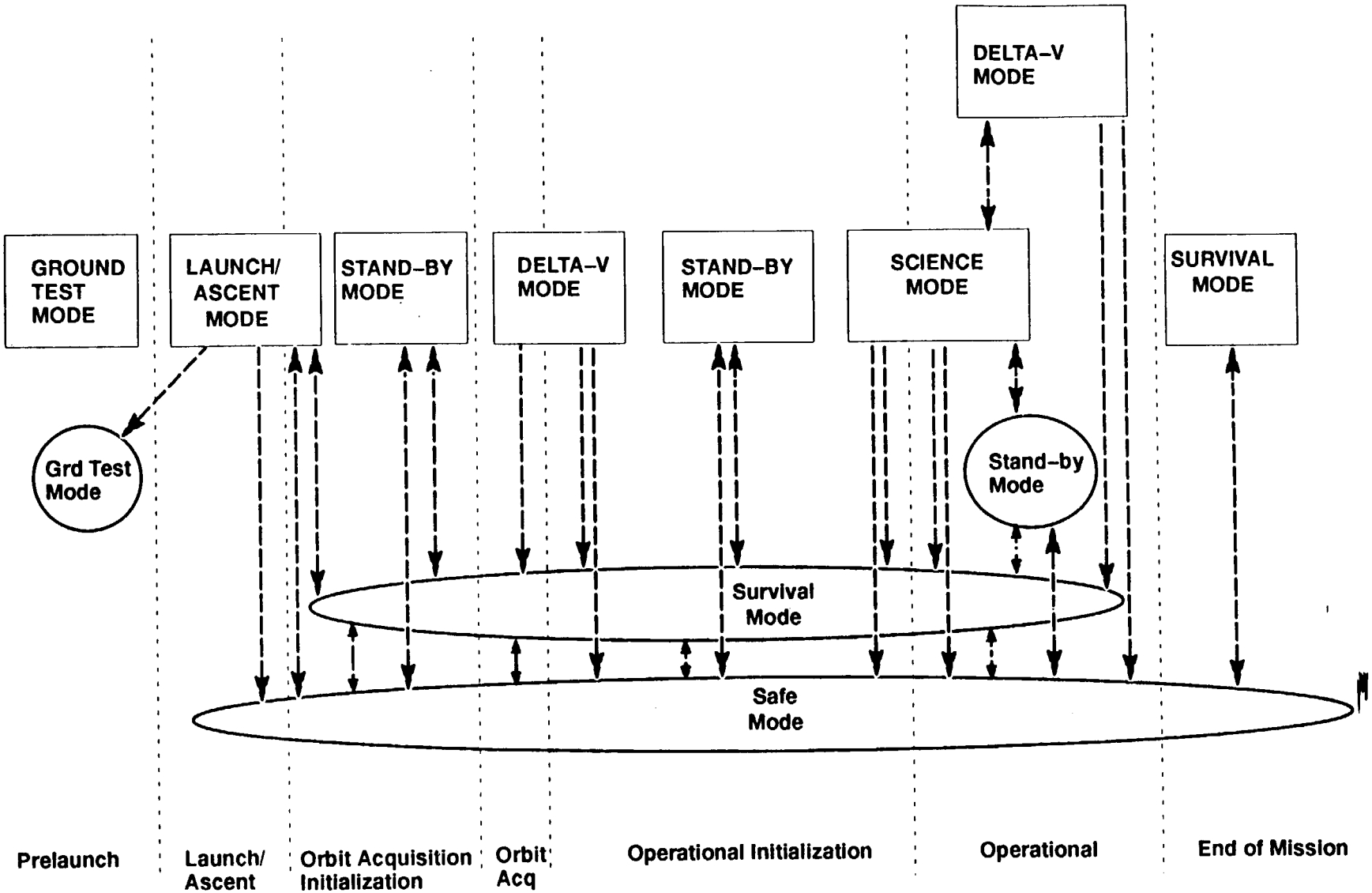

Figure 6. Phase and Mode Transitions

the launch vehicle. Entry into Ground Test Mode can also occur from Launch Mode in the contingency situation where the launch is aborted or delayed. In this unique situation, the T–0 umbilical may be reactivated, in which case the mission phase would transition from Launch/Ascent back to pre–launch. Exit from this mode will occur upon removal of umbilical power (and transition to Launch Mode in the Launch/Ascent Phase), approximately five minutes before lift–off.

3.1.4.2.2 Launch Mode

Launch mode is used during the launch/ascent and orbit acquisition initialization phases of the mission. The Spacecraft enters Launch mode upon removal of umbilical power at the pad. In this mode the Spacecraft experiences launch, acquires earth after separation from the launch vehicle, deploys the solar array and HGA, and attains energy balance. Once all these events have occurred, the Spacecraft transitions to Standby mode, ready for any initial checkout deemed necessary. As always, transition to Safe Mode may occur at any time conditions dictate.

3.1.4.2.3 Survival Mode

The Survival Mode is a power critical mode in which only essential Spacecraft functions (e.g., low rate commanding/telemetry) will be supported. Upon transition into the Survival Mode, non–essential housekeeping equipment and Instruments will power–down. The primary flight computer will maintain full control of the Spacecraft while in the Survival Mode. Exit from the Survival Mode to all other modes is by ground command only, with the exception of Safe Mode, which can be entered autonomously upon loss of the primary flight computer "I'm OK" signal or due to an attitude error detected by GN&C FDIR.

3.1.4.2.4 Delta–V Mode

The Delta–V Mode is a "propulsive" mode used both to raise altitude from the injection orbit altitude to mission operational altitude, and to provide periodic correction to the mission orbit inclination and altitude. The amount of resources available is a function of mission phase and of the Spacecraft system mode immediately prior to the transition to Delta–V Mode. All transitions to the Delta–V Mode will be ground commanded. Nominal exit from the Delta–V Mode will be by ground command, following completion of the delta–v maneuver. The only non–ground commanded exit occurs when a loss of the primary flight computer "I'm OK" signal or an attitude anomaly beyond a given threshold causes autonomous entry into Safe Mode.

3.1.4.2.5 Standby Mode

The Standby Mode is a "non–science" mode that is used during subsystems check–out, or quiescent periods, or as back–up to the Science Mode. Although Instrument science is not supported in this mode, Instrument housekeeping functions can remain operational. During the Operational Initialization Phase, the Spacecraft will be ground commanded into the Standby Mode and will remain in this mode during system/subsystem check–out. During the Operational Mission phase, the Spacecraft may be ground commanded into the Standby Mode. Autonomous transition to Standby Mode may be made following a system type failure that prevents or hinders science operation, but does not require significant shedding of Spacecraft loads. The Standby Mode may be utilized during the transition from Survival Mode or Safe Mode back to a higher operating state.

3.1.4.2.6 Science Mode

The Science Mode is the primary mode used during the Operational Mission Phase. During the Operational Initialization Phase, it is one of several primary modes. The Spacecraft Bus will provide the full complement of resources necessary to meet science mission objectives during this mode. Science Mode is used for Instrument check–out activities during the latter portion of the Operational Initialization Phase because full resources, including high–rate data handling, are required for this activity. Entry into the Science Mode will be by ground command following acceptable attitude and environmental conditions. Ground commanded entry into all other backup modes is also possible. Autonomous entry into backup modes is also possible when commanded by flight software.

3.1.4.2.7 Safe Mode

The Safe Mode is a state in which the Spacecraft is capable of operating partially or completely independent of the primary flight computer depending on the problem which caused the entry into Safe Mode. Specifically, the Spacecraft will be considered operating in the Safe Mode as long as the safe mode controller performs the attitude control processing functions. There are a total of nine sub–levels of Safe Mode, depending upon Spacecraft Bus capability. The Spacecraft may be in either a full power state or a shed load configuration. The attitude, while controlled by the safe–mode controller, may be either Earth or Sun oriented. Instrument science may or may not be supported. The lowest level of Safe Mode (level–0) involves a shed power load, no primary flight computer (safe–mode controller only), no Delta–V maneuvers, a sun attitude, and no science data support. The highest level (level–8) involves a full Power Load (on), Computer (safe–mode controller/primary flight computer) , Delta–V (no), Attitude (earth) and Science Data (yes). The sub–mode which the Spacecraft will autonomously enter depends upon the fault and the previous mode from which the Spacecraft came.

The Safe Mode is a back–up mode that may be used during the Orbit Acquisition Initialization, Orbit Acquisition, Operational Initialization, Operational Mission, and End–of–Mission Phases.

Autonomous entry into Safe Mode can only occur under two circumstances. The first is the loss of the primary flight computer "I'm OK" signal and the second is due to an attitude error detected by GN&C FDIR. The Spacecraft can be ground commanded into Safe Mode from any initial mode. At all other times, the transition from Survival to Safe Mode is permissible. Additionally, there is no guarantee as to the Spacecraft attitude during the transition to Safe Mode.

Exit from the Safe Mode into either Survival, Standby, or Science Mode is made by ground command following verification that the primary flight computer is functional and capable of controlling the Spacecraft and/or that the safe mode controller is no longer needed for attitude control.

3.1.4.3 Probability of Mission Success

The probability of mission success of the Spacecraft Bus will, as a goal, not be less than 0.75 for a mission life of five years when operating continuously in the orbital environment specified. To meet the system requirement, each subsystem will, as a goal, meet or exceed its allocated probability of success. Nominal values for these subsystem allocations are indicated in Table II below.

Table II. Subsystems Reliability

Subsystem	Probability of Success (5 years) Allocation
GN&CS	0.96
TCS	0.998
SMS	0.999
COMS	0.98
C&DHS	0.843
PROPS	0.99
EPS	0.97
EAS	–
Total Allocated	0.761
Goal	0.75
Margin	0.011

3.1.5 Interface Requirements

Figure 7 depicts the relationship between the Spacecraft Bus and other operational elements of the EOS. Figure 8 depicts the relationships between the Spacecraft and other Space/Ground Operating Elements.

3.1.5.1 Instrument Interfaces

3.1.5.1.1 General Instrument Interfaces

The Spacecraft Bus shall comply with the Instrument interface requirements specified in the General Instrument Interface Specification (GIIS), GSFC 420–03–02.

3.1.5.1.2 Unique Instrument Interfaces

The Spacecraft Bus shall comply with the interface requirements of the EOS AM Instrument set listed in Table III, as described in the Unique Instrument Interface Documents (UIIDs).

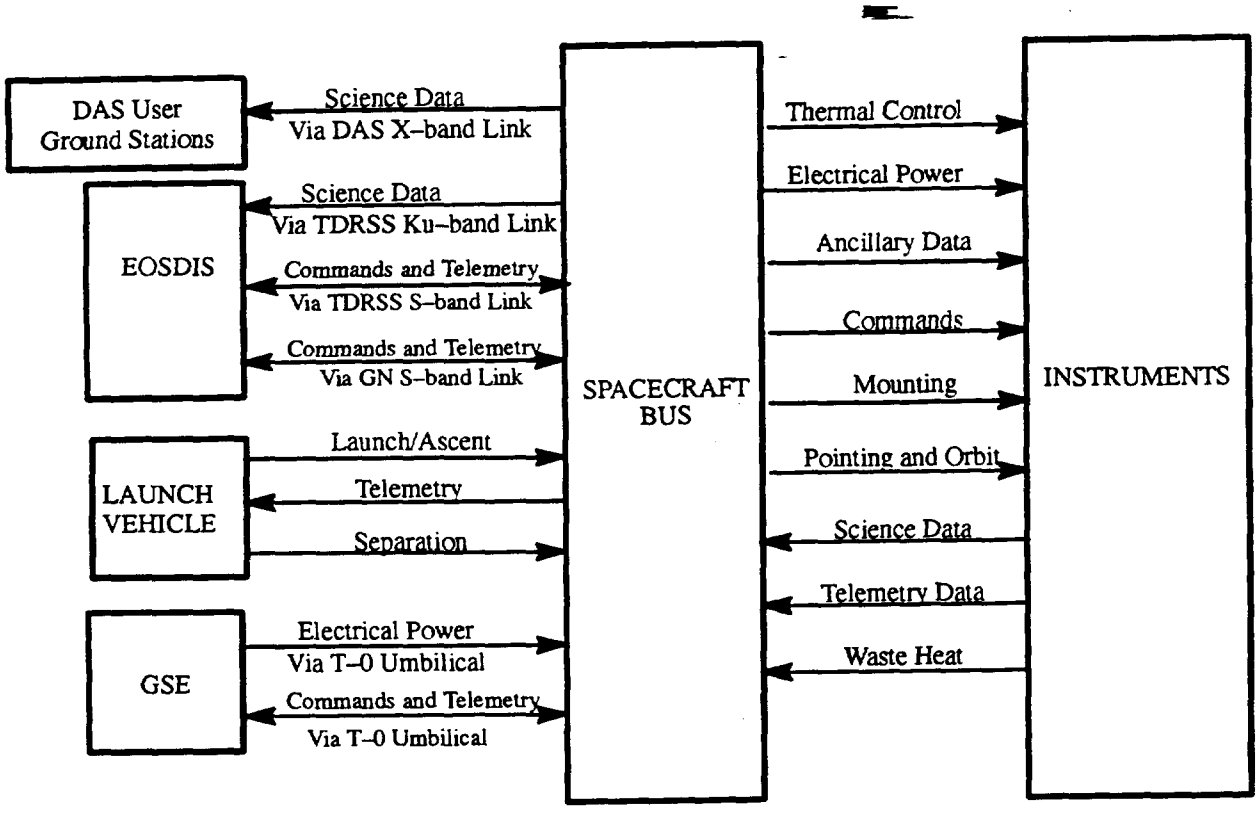

Figure 7. Spacecraft Bus Relationship to EOS Program Elements

Table III. EOS AM Mission Instruments

Instrument	UIID
ASTER	421–12–11–01
CERES	421–12–12–02
MISR	421–12–03–02
MODIS	421–12–04–01
MOPITT	421–12–15–02

The Spacecraft Bus shall comply with the requirements of the UIIDs. If the UIIDs and the GIIS conflict, the UIIDs shall govern.

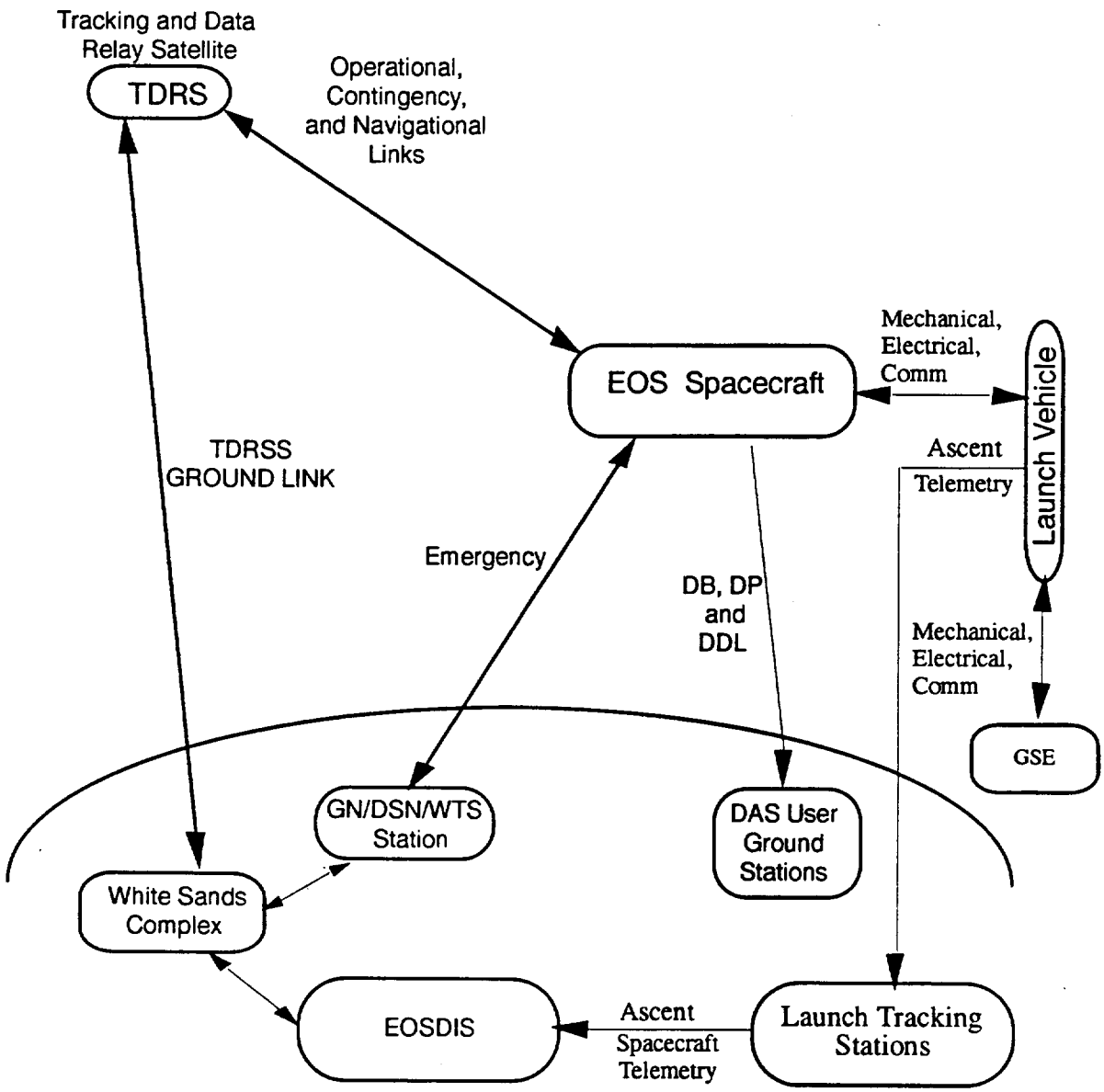

Figure 8. Spacecraft Interfaces with Other Space/Ground Operating Elements

UIID Instrument parameters defined below shall be assumed for Spacecraft Bus design activities.

Instrument Mass:

ASTER	992.3 lb	
(CSP		121.3)
(MPS		39.7)
(SWIR		291.1)
(TIR		359.4)
(VSR		116.9)
(VEL		63.9)
MISR	297.7 lb	
MODIS	613.0 lb	
CERES	198.5 lb	
(Fore		99.25)
(Aft		99.25)
MOPITT	352.8 lb	

Instrument Power:

Instrument	Avg (Watts) (One-orbit)	Avg (Watts) (Two-orbit)	Peak (Watts)	Number of Sets of Power Interfaces
ASTER	525	470	761	2
(CSP	76)		121	
(MPS	44)		74	
(SWIR	150)		258	
(TIR	189)		326	
(VSR	46)		65	
(VEL	44)		88	
MISR	80	75	135	1
MODIS	245	240	285	1
CERES	95	95	185	2
(Biaxial Mode *	50		104	
(Cross-Track Mode	45		81	
MOPITT	250	250	250	1

* – No more than one CERES assembly will be in Biaxial Mode at any time.

Instrument Science Data Allocations:

	Avg (kbps) (2–orbit except CERES which is 1–orbit avg)	Peak (kbps)	Number of High–Rate Science Data Interfaces	Number of Low–Rate Science Data Interfaces
ASTER	8,300	89,200	4	0
TIR		4109		
SWIR		23,053		
VNIR#1		31,019		
VNIR#2		31,019		
MISR	4,000	6,500	1	0
MODIS	6,200	11,000	1	0
CERES	20	20	0	2
MOPITT	6	6	0	1

Instrument Command And Data Handling Interfaces:

Instrument	Cmd & Tlm Bus	Time Mark & Freq Bus	Relay Drive Cmd	Passive Bi–level Tlm	Passive Analog Tlm	Active Analog Tlm
ASTER	1	1	28	20	27	17
MISR	1	1	8	8	16	0
MODIS	1	1	24	25	32	0
CERES	2	2	18	8	16	0
MOPITT	1	1	20	16	21	0

Instrument Thermal Requirements (Science Mode):

Instrument	No. of Coldplates
ASTER	2
MISR	0
MODIS	0
CERES	0
MOPITT	1

3.1.5.2 EOS Data and Information System (EOSDIS) Interfaces

All Spacecraft interfaces to the EOSDIS shall comply with the data format and protocol requirements specified in EOS–AM Spacecraft Data Format Control Book, IS20008658.

3.1.5.3 Tracking and Data Relay Satellite System (TDRSS) Interfaces

3.1.5.3.1 Space Network User's Guide

Spacecraft interfaces to the TDRSS shall comply with the Space Network (SN) User's Guide, NASA STDN 101.2.

3.1.5.3.2 RF ICD

Spacecraft interfaces to the TDRSS shall conform to the RF ICD between the EOS AM Spacecraft and the Spaceflight Tracking and Data Network, IS20008504.

3.1.5.4 Ground Network (GN)

The Spacecraft shall interface with the EOSDIS via the NASA GN. Interfaces which are compatible with GN may be assumed to be compatible with the Deep Space Network (DSN) and the Wallops Tracking Station (WTS).

Spacecraft interfaces to the GN shall meet the requirements of IS20008504.

3.1.5.5 Direct Access System (DAS) User Ground Station Interfaces

The Spacecraft shall transfer data to DAS users via X–band.

3.1.5.6 Launch Vehicle Interfaces

The Spacecraft shall be capable of launching on a launch vehicle which meets the requirements specified in the EOS AM Spacecraft to Launch Vehicle Interface Requirements Document, IS20008503.

3.1.5.7 Spacecraft Processing Interfaces

The Spacecraft shall interface with GSE and facilities as necessary to support Spacecraft integration, test, and prelaunch operations. The Spacecraft shall interface with Launch Vehicle System supplied GSE and facilities defined in the EOS AM Spacecraft to Launch Vehicle Interface Requirements Document, IS20008503.

3.1.5.8 EOS Ground System Test Support

The Spacecraft shall participate in end-to-end testing of the command and data handling elements of the EOS Ground System.

3.1.6 Spacecraft Bus Functional Partitioning

The Spacecraft Bus will be functionally partitioned into the following subsystems:

3.1.6.1 Spacecraft Bus Subsystem Descriptions

The descriptions in this section are intended to be informational and to establish for the reader a context for the requirements which follow in sections 3.2 through 3.7. Section 3.1.6.1 and its subsections do not impose design requirements on the subsystems. The formal design is in Sections 3.2 through 3.7.

Figure 9 identifies system services and functions provided by each subsystem to other subsystems and to Instruments.

3.1.6.1.1 Electrical Power Subsystem (EPS)

The EPS provides all Spacecraft Instruments and subsystem housekeeping equipment with their specified power during all mission phases. The EPS provides the functions of energy generation, energy storage, power conversion, and regulation, and load fault protection.

Power is generated by a single–wing photovoltaic solar–cell array. Rechargeable Nickel–Hydrogen (NiH_2) batteries are used to store power, and excess solar array power is controlled through the use of a Sequential Shunt Unit (SSU).

3.1.6.1.2 Thermal Control Subsystem (TCS)

The TCS provides temperature control for all Instrument interfaces, housekeeping equipment, and major assemblies. Multilayer insulation (MLI), isolators, and thermal finishes are used wherever applicable. For Equipment Modules (EMs), thermal control is accomplished viaConstant Conductance Heat Pipes (CCHPs). For Instruments, a Spacecraft Bus–provided Capillary Pumped Heat Transport system (CPHTS) provides thermal control to those Instruments which do not reject all of their excess heat locally. Heaters are used where necessary. Temperature telemetry is provided throughout the Spacecraft to monitor the performance of the subsystem.

3.1.6.1.3 Guidance, Navigation and Control Subsystem (GN&CS)

The GN&CS determines the Spacecraft orbit and attitude, autonomously controls the attitude, and controls actuators for orbit adjustment and appendage pointing. It provides normal and backup pointing modes as required by the various Spacecraft operating modes and supports propulsive operations for delta–V and attitude control maneuvers. The GN&CS also derives orbital and attitude information for inclusion in ancillary data.

Four reaction–wheel assemblies (RWAs) are used for primary attitude control. Three magnetic torque rods are used for momentum unloading. Thrusters and/or RWAs are used to perform slew maneuvers.

Primary navigation functions use the TDRSS Onboard Navigation System (TONS). TDRSS–based and GN–based S–Band tracking support functions provide backups to TONS navigation. In all on–orbit modes except Safe Mode, the GN&CS attitude determination and control algorithms are executed by flight software in the C&DHS–provided Spacecraft Control Computer. During Safe Mode, these algorithms are executed by a GN&CS–provided safe–mode controller.

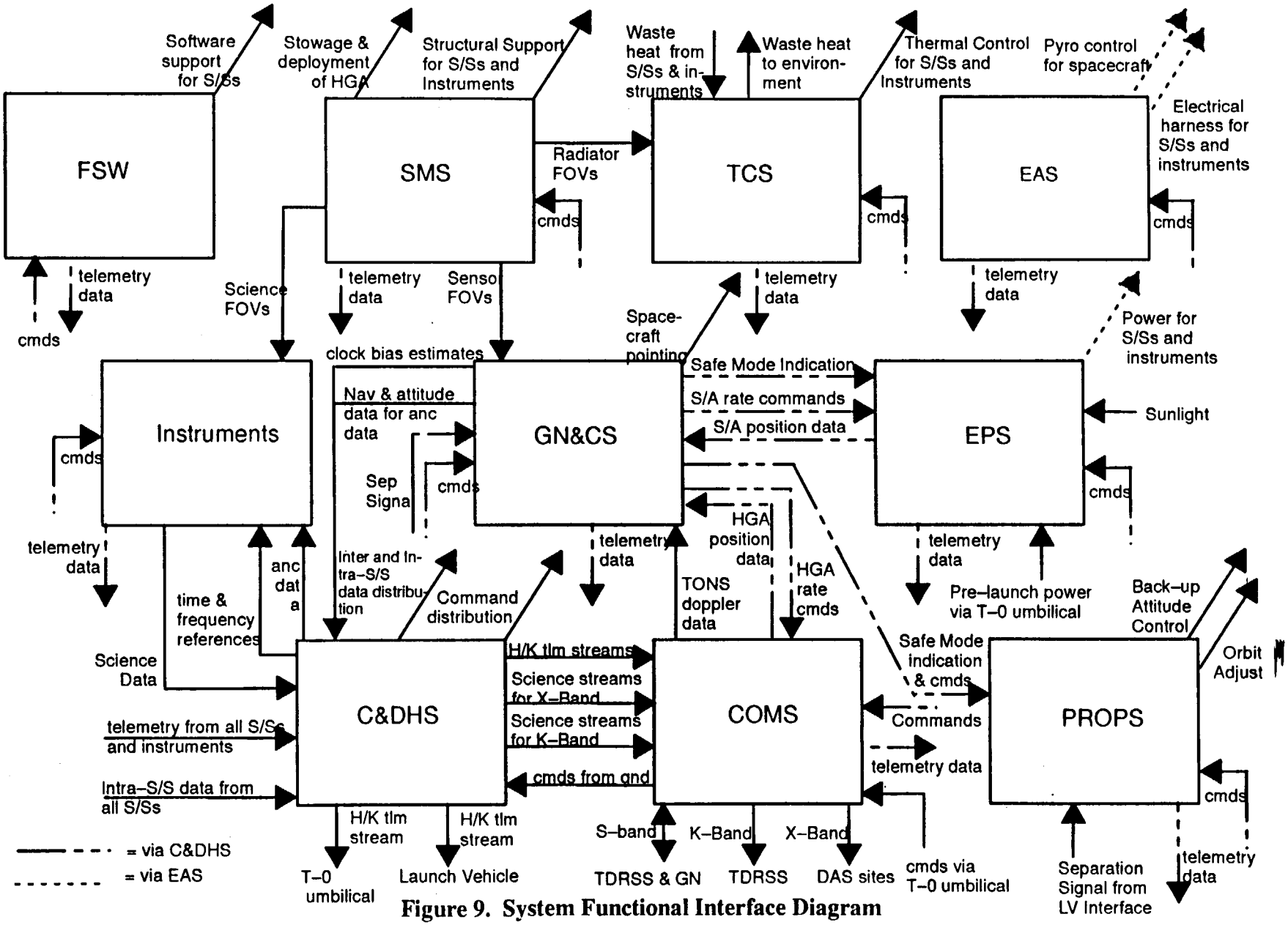

Figure 9. System Functional Interface Diagram

3.1.6.1.4 Communication Subsystem (COMS)

The COMS provides all external interfaces for Spacecraft data and tracking signals. It receives and demodulates all command data destined for Spacecraft subsystems and Instruments, modulates and transmits all data from Spacecraft subsystems and Instruments which is destined for the ground, and receives, decodes, and transmits, as appropriate, all signals used for Spacecraft tracking.

Transmission of telemetry and reception of commands will be supported through the Tracking and Data Relay Satellite System (TDRSS). If the TDRSS becomes unavailable, backup command and telemetry functions will be accommodated through the use of the GN. Direct Access services will also be included which will provide direct–to–user science data and also act as a backup to the TDRSS science data return link function. The Communications Subsystem will support an interface for command function through the launch vehicle umbilical for prelaunch checkout.

3.1.6.1.5 Command and Data Handling Subsystem (C&DHS)

The C&DHS provides a variety of services to support housekeeping and Instruments including:

a. command distribution

b. telemetry collection and formatting

c. collection, formatting, routing, and storage of data for downlink

d. distribution of ancillary data

e. generation and distribution of time and frequency references

f. on–board data communication between distributed subsystem hardware and software components

g. provision of pooled computing resources

h. data input/output to and from sensors and effectors with appropriate signal conditioning.

Launch ascent telemetry will be provided to the Launch Vehicle. The C&DHS will also provide hardline telemetry to the launch vehicle umbilical interface for pre–launch check–out.

3.1.6.1.6 Structures and Mechanisms Subsystem (SMS)

The SMS provides the necessary structural support and mounting area for all Instruments and housekeeping equipment. These functions are engineered to satisfy multiple constraints including: launch environment, fairing static envelope, AM Instrument set FOV and pointing stability requirements. The SMS provides the release and deployment mechanism for the High–Gain Antenna. The SMS also provides the interface to the launch vehicle separation system.

The EOS Spacecraft Bus structure consists of the core structure, Equipment Modules (EMs), equipment panels, Instrument accommodation structures and secondary structures which support harnessing and components mounted to the core structure.

3.1.6.1.7 Propulsion Subsystem (PROPS)

The PROPS provides thrust to support attitude and orbit control during all mission phases following the Launch/Ascent Phase. This includes impulses for orbit circularization and orbit maintenance at operational altitude, impulses for backup momentum management and attitude control. Thruster operations are controlled in accordance with commands received from the GN&CS or from ground controllers via the C&DHS.

The PROPS uses hydrazine as a monopropellant for the attitude control and Delta–V thrusters.

3.1.6.1.8 Electrical Accommodation Subsystem (EAS)

The (EAS) provides all intercomponent electrical connections, implements the system and assembly level grounding, and other EMC requirements of the EOS Spacecraft Bus.

Additionally, the EAS provides the electronics for deployment mechanisms used on the Spacecraft such as the arming and firing circuits for the pyrotechnic mechanisms

Electrical Accommodations provide for the following classes of interconnections:

a. 120 V DC primary power distribution and 28 V secondary power distribution
b. C&DH data busses, high–rate data links, and discrete wiring
c. Pyrotechnic cabling
d. Grounding and signal reference connections

The interconnections are provided by the Spacecraft Bus core harness assembly, EM and panel harness assemblies, Instrument accommodations harness assemblies, the signal reference plane (SRP), the prime power reference (PPR), and attachment hardware.

3.1.6.1.9 Flight Software System (FSWS)

The Flight Software System (FSWS) consists of both software and firmware, distributed across C&DHS components. The FSWS will monitor, control and provide the necessary services and mission support needed to sustain the Spacecraft throughout its mission. The FSWS supports a multilayered architecture. The first layer is concerned with the hardware and its electrical characteristics, the second layer provides Operating System I/O capabilities, and message transfer capabilities, and the third layer comprises application programs as required by various Spacecraft subsystem and Instrument functions.

The FSWS is primarily implemented in the Ada programming language, although certain processor functions may be programmed in assembly language.

Functions performed by the FSWS include:

a. storage and dispatch of both absolute-time and relative-time command sequences
b. monitoring of housekeeping telemetry data for predefined conditions which may indicate anomalies

c. execution of system Fault Detection, Isolation, and Recovery (FDIR) algorithms

d. execution of system mode control algorithms

e. execution of control algorithms required by other subsystems and by selected subsystem components

3.1.6.2 Spacecraft Bus Major Assemblies

The Spacecraft Bus is modular and consists of the subsystems already defined. The modularity is accomplished by packaging, where practical, functionally related equipment into assemblies called Equipment Modules (EM's). The Spacecraft Bus includes the following major assemblies:

a. Battery Panel

b. Propulsion Module

c. HGA Assembly

d. Solar Array Assembly

e. GN&C Sensor Module

f. Reaction Wheel Assembly (RWA) Module

g. Power Module

h. Communications/C&DH Module

i. Recorder Module

j. Direct Access Service (DAS) Panel

The descriptions in this section are intended to be informational and to establish for the reader a context for the requirements which follow in sections 3.2 through 3.7. Section 3.1.6.2 and its subsections do not impose design requirements on the Major Assemblies.

3.1.6.2.1 Spacecraft Core

While the Spacecraft Core itself is not a major assembly, it provides the necessary structural support and mounting structures for the major assemblies and Instruments, as well as subsystem equipment not housed in major assemblies.

3.1.6.2.2 Propulsion Module

The Propulsion Module houses the propulsive equipment needed for delta–V maneuvers, orbit maintenance, and back–up attitude control. This includes propellant and pressurant tankage and plumbing, thrusters, and associated monitoring and control equipment.

3.1.6.2.3 HGA Assembly

The HGA Assembly houses the High-Gain Antenna used for TDRSS communications, pointing mechanisms, the Ku–band RF transmission equipment, and associated monitoring and control equipment.

3.1.6.2.4 Solar Array Assembly

The Solar Array Assembly contains the Solar Array blanket and boom, associated stowage equipment and deployment mechanisms, Sequential Shunt Unit, coarse sun sensor, and various associated monitoring and control equipment.

3.1.6.2.5 GN&C Sensor Module

The GN&C Sensor Module houses most of the sensor equipment used by GN&CS for attitude determination, and associated monitoring and control equipment.

3.1.6.2.6 Reaction Wheel Assembly (RWA) Modules

The RWA Module houses the RWAs (the primary actuators used by the GN&CS for attitude control) along with associated monitoring and control equipment.

3.1.6.2.7 Power Module

The Power Module houses a battery panel and associated charge/discharge control electronics, the equipment which regulates and distributes power to the various Spacecraft loads, and associated monitoring and control equipment.

3.1.6.2.8 Communications/C&DH Module

The Communications/C&DH Module houses the following:

a. S–band RF equipment for command reception and telemetry transmission

b. C&DHS equipment for command reception and distribution as well as telemetry collection and formatting

c. primary flight computers

d. associated monitoring and control equipment

3.1.6.2.9 Recorder Module

The Recorder Module houses recorders for recording and playback of housekeeping telemetry and of Instrument science data. It also houses the C&DHS equipment which formats and switches the various streams of science data for recording and transmission, along with associated monitoring and control equipment.

3.1.6.2.10 Direct Access Service (DAS) Panel

The DAS Panel houses the X–band RF transmission electronics for the Direct Broadcast, Direct Downlink, and Direct Playback services, and associated monitoring and control equipment.

3.1.6.2.11 Battery Panel

The battery panel houses one of the spacecraft's two battery panels (the other is in the Power Module), and associated monitoring and control equipment.

3.2 Spacecraft Bus Requirements

3.2.1 Functional Requirements

3.2.1.1 Instrument Interface Requirements

3.2.1.1.1 Reserved

3.2.1.1.2 Instrument Operations Support

3.2.1.1.2.1 Independent Instrument Operation

The Spacecraft Bus shall permit the operation of each Instrument independent of that of other Instruments.

3.2.1.1.2.2 Reserved

3.2.1.1.2.3 Ancillary Data

The Spacecraft Bus shall provide ancillary data to Instruments such that the age of any data at delivery will never exceed 2.048(**TBR–1**) seconds.

3.2.1.1.2.4 Attitude Parameters

The Spacecraft Bus shall maintain the following parameter limits at the instrument interfaces with the Spacecraft Bus:

a. 150 arc–sec, 3σ, per axis pointing accuracy during Science Mode operations

b. 90 arc–sec, 3σ, per axis pointing knowledge during Science Mode operations

c. **(TBD–4)** stability

d. **(TBD–4)** jitter

e. Spacecraft position knowledge of ±150m, 3σ, per axis during Science Mode operations

3.2.1.1.2.5 Reserved

3.2.1.1.3 Instrument Telemetry

The Spacecraft Bus shall collect, and transmit to the ground, Instrument telemetry data.

3.2.1.1.4 Instrument Commands

The Spacecraft Bus shall receive, validate, and deliver all Instrument commands.

3.2.1.2 Science Data Handling

3.2.1.2.1 Reallocation of Data Resources

The Spacecraft Bus shall allow the uplink commanded reallocation of storage capacity.

3.2.1.2.2 Science Data Processing

3.2.1.2.2.1 Path Packet Service Processing

The Spacecraft Bus shall format and multiplex Instrument data packets, along with the Spacecraft Bus–generated housekeeping telemetry packets and ancillary data packets, for transmission to the EOSDIS. This processing shall be in accordance with the Path Packet Service as defined in CCSDS 701.00–B–1.

3.2.1.2.2.2 Forward Error Correction

The Spacecraft Bus shall meet Grade of Service 2 as defined in CCSDS 701.00–B–1 for all science data.

3.2.1.2.3 Science Data Storage

The Spacecraft Bus shall be capable of storing at least 140 **(TBR–2)** Gbits of Instrument science data, ancillary data, and Spacecraft health and status data.

3.2.1.2.4 Science Data Transmission

3.2.1.2.4.1 Commanded Data Transmission

The Spacecraft Bus shall, on command, transmit real–time or stored science data to the ground.

3.2.1.2.4.2 Reserved

3.2.1.2.4.3 Simultaneous Data Storage and Transmission

The Spacecraft Bus shall be capable of simultaneously storing the science data and transmitting it to the EOSDIS in real time.

3.2.1.2.4.4 Data Loss

During science operations, the Spacecraft Bus shall not cause the loss (i.e., dropped bits, fragmented transfer frames, etc.) of any Instrument science data other than that due to random bit errors.

3.2.1.2.5 Science Data Completeness

The Spacecraft Bus shall contribute no more than a 10^{-7} **(TBR–3)** bit errors/bit BER to the Instrument science data collected during any orbit, when measured between the Instrument interface and the output on the ground of the CCSDS Grade 2 processing. This does not include the BER induced by the communications links external to the Spacecraft.

3.2.1.3 Operability

3.2.1.3.1 Commandability

3.2.1.3.1.1 Previous State Independence

Spacecraft Bus subsystems and components shall be commandable to known states regardless of earlier states.

3.2.1.3.1.2 State–Dependent Functionality

Spacecraft Bus commands shall each have only one implementation. The function initiated by any command shall not vary as a function of the existing state of the Spacecraft equipment executing the command (i.e., no "toggle" commands). The function initiated shall not vary as a function of the existing Spacecraft operating mode.

3.2.1.3.1.3 Acceptance of Commands

The Spacecraft Bus shall accept and execute commands received over any forward (command) link.

3.2.1.3.1.4 Reserved

3.2.1.3.1.5 Single Command Recovery

No single command shall place the Spacecraft into an anomolous configuration from which it cannot recover.

3.2.1.3.2 Housekeeping Telemetry

The Spacecraft Bus shall collect and transmit to the ground Spacecraft telemetry data.

3.2.1.3.2.1 Telemetry Data Content

3.2.1.3.2.1.1 Housekeeping Telemetry Data Content

Spacecraft Bus communications return links shall contain housekeeping telemetry which includes:

a. Indication of the current Spacecraft System Mode

b. Data indicative of the current status of the on–board subsystems and Instruments

c. Health and safety status data

d. Indications of resource usage

e. Indications of sensed failures or anomalies, if any

f. Data suitable for verifying execution of each Spacecraft comman

g. Notification of all autonomous switching between redundant paths

h. Warning and advisory data, if any

i. Periodic samples of the navigation/attitude state vector

j. Any Instrument provided telemetry

3.2.1.3.2.1.2 Health and Safety Telemetry Data Content

Spacecraft Health and Safety telemetry shall contain data indicative of the current status of on–board subsystems and Instruments. The Spacecraft shall be capable of transmitting the data in a separate 1 kbps stream. The Spacecraft shall also include this Health and Safety telemetry in the housekeeping telemetry stream.

3.2.1.3.2.1.3 Reserved

3.2.1.3.2.1.4 Stored Housekeeping Telemetry

The Spacecraft Bus shall retain in storage at least four orbits of housekeeping telemetry data selected to support ground–based anomaly diagnosis.

3.2.1.3.2.1.5 Science Data Stream Content

The Spacecraft shall incorporate the Ancillary Data Messages defined in the Command and Data Handling section of the GIIS into the science data stream along with the Housekeeping telemetry defined in 3.2.1.3.2.1.1 and the Science data itself.

3.2.1.3.2.1.6 On–Orbit Telemetry Redefinition

The Spacecraft shall allow the on–orbit redefinition of housekeeping telemetry stream contents.

3.2.1.3.2.2 Transmission of Telemetry

3.2.1.3.2.2.1 Stored Housekeeping Telemetry

The Spacecraft Bus shall transmit stored housekeeping telemetry data via Ku, S, or X band communications links, as commanded by the ground.

3.2.1.3.2.2.2 Telemetry Availability

The Spacecraft Bus shall be capable of gathering and transmitting telemetry during all modes employed after initial on–orbit communications with the ground have been established.

3.2.1.3.2.2.3 Forward Error Correction (FEC) Coding on S–Band Data

For telemetry sent via TDRS, the Spacecraft Bus shall meet the same correctional coding requirements as described for science data in 3.2.1.2.2.2.

3.2.1.3.2.2.4 Simultaneous Emergency Data Transmission

The Spacecraft Bus shall be capable of simultaneous transmission of real–time and recorded telemetry data via the GN link.

3.2.1.3.3 End–to–End Test Support

The Spacecraft Bus shall accept commands and provide telemetry to support verification of end–to–end data throughput capabilities of flight and ground elements, and to support prelaunch and on–orbit Spacecraft checkout.

3.2.1.3.4 Inter–Subsystem Data Transfer

The Spacecraft Bus shall provide for the distribution of data between and within subsystems.

3.2.1.4 Navigation

The Spacecraft Bus shall maintain real–time, on–board estimates of Spacecraft position and velocity based upon on–board measurement processing/state propagation and based on ground–commanded orbit data estimates. All navigation and tracking data shall be communicated via the links shown in Table IV.

3.2.1.4.1 On–Board Navigation

The Spacecraft Bus shall be capable of determining Spacecraft position and velocity vectors by processing Doppler data extracted from signals from TDRSS satellites. This is known as the TDRSS On–Board Navigation System (TONS).

3.2.1.4.1.1 Timing Signals

The Spacecraft Bus shall receive timing signals from the ground via TDRSS satellites and shall process these signals to allow ground measurement of errors in the Spacecraft clock using the User Spacecraft Clock Calibration System (USCCS).

Table IV. Navigation/Tracking Links

NAVIGATION/ TRACKING SERVICE	COMMUNICATIONS LINK/ANTENNA COMBINATIONS THROUGH WHICH SERVICE MUST BE SUPPORTED			
	TDRSS SSA via HGA	TDRSS SMA via HGA	TDRSS SSA via Omni	GN S-band via Omni
TONS On-board Navigation	Forward Link Only	Forward Link Only	Forward Link Only	Not Applicable
TDRSS Ranging	Forward + Return Links	Forward + Return Links	Forward + Return Links	Not Applicable
TDRSS Doppler Tracking	Return Link Only	Return Link Only	Return Link Only	Not Applicable
GN Doppler Tracking	Not Applicable	Not Applicable	Not Applicable	Return Link Only

3.2.1.4.2 Ground–Based Orbit Determination

3.2.1.4.2.1 Two–Way Ranging

The Spacecraft Bus shall time synchronize the TDRSS return link ranging channel PN code with the TDRSS forward link ranging channel PN code for the TDRSS ranging links identified in Table IV.

3.2.1.4.2.2 One–Way Return Link Tracking

The Spacecraft Bus shall transmit an S–band carrier for one–way Doppler tracking via TDRSS or GN without carrier frequency modelling, on the Doppler tracking links identified in Table IV. The carrier's frequency stability shall be compliant with the requirements of IS20008504.

3.2.1.4.2.3 Ground Uplinked Navigation Data

The Spacecraft Bus shall accept ground determined, uplinked navigation data and shall use it on command.

3.2.1.5 Guidance and Orbit Control

3.2.1.5.1 Orbit Transfers

3.2.1.5.1.1 Injection Orbit

The Spacecraft Bus shall be capable, through ground–commanded propulsive maneuvers, of acquiring the Operational Phase orbit when injected by the launch vehicle into the following nominal orbit:

Perigee Radius	6927km +5/–0 km
Apogee Radius	7075km +0/10 km
Inclination	98.2 deg ±0.1 deg **(TBR–4)**
Argument of Perigee	168 deg **(TBR–4)**
Descending Node	10:15 – 10:45 AM (local mean solar time)

3.2.1.5.2 Operational Orbit Maintenance

3.2.1.5.2.1 Operational Phase Orbit

The Spacecraft Bus shall be capable, through ground–commanded propulsive maneuvers, of maintaining a nominal Operational Phase orbit which is near circular and sun–synchronous with the following characteristics:

Equatorial Altitude	705 km ± 5 km
Semi–Major Axis:	7078 ± 5 km (mean)
Inclination:	98.2 degrees ± 0.15 degrees
Eccentricity	.0012 ± 0.0004
Argument of Perigee	90 degrees ± 20 degrees
Descending Node	10:30 am ± 15 min (local mean solar time)

3.2.1.5.2.2 Ground Track Maintenance

The Spacecraft Bus shall be capable, through ground–commanded propulsive maneuvers, of establishing and maintaining a nominal Operational Phase ground track in which the subsatellite point will follow a path which repeats as follows:

Repetition Interval	233 revs (16 days)
Repetition Accuracy	±20km, 3 sigma, at all latitudes, cross track
Radial Orbit Position Repeatability:	+10 / –5 km , 3 sigma, at a given latitude

3.2.1.5.3 Reserved

3.2.1.5.4 Reserved

3.2.1.6 Attitude Determination and Control

3.2.1.6.1 Attitude Determination

The Spacecraft Bus shall maintain real–time, on–board estimates of the Spacecraft attitude and attitude rates.

3.2.1.6.2 Reserved

3.2.1.6.3 Reserved

3.2.1.6.4 Safe Mode

3.2.1.6.4.1 Autonomous Entry

The Spacecraft shall autonomously enter Safe Mode under either of the following conditions: a) detection that the processors or flight software are incapable of supporting safe Spacecraft operations or b) the GN&C subsystem fails to maintain the spacecraft attitude within predetermined thresholds.

The Spacecraft shall not autonomously enter Safe Mode due to attitude errors detected as a result of transitioning between using TONS and the using the Spacecraft ephemeris data for navigation.

3.2.1.6.4.2 Reserved

3.2.1.6.4.3 Safe Mode Exit

Exit from Safe Mode shall occur only when commanded by the ground.

3.2.1.6.4.4 Thermal and Power Safe Attitude

If the Spacecraft enters safe mode due to an attitude maintenance anomaly, the Spacecraft shall acquire and maintain a thermal– and power–safe attitude. If the Spacecraft enters safe mode due to a computer or software anomaly, the Spacecraft shall maintain a thermal– and power–safe attitude independently of the primary flight computers and flight software.

3.2.1.6.4.5 Attitude Maintenance Tolerance

While in Earth–pointing Safe Mode at the mission altitude with the RWAs controlling attitude, the Spacecraft Bus shall maintain the Spacecraft attitude with sufficient accuracy to support the establishment and maintenance of the S–Band links with TDRSS via the HGA.

3.2.1.7 Communications

3.2.1.7.1 General

3.2.1.7.1.1 Reserved

3.2.1.7.1.2 Reserved

3.2.1.7.1.3 TDRSS Contact Length

The Spacecraft Bus shall be capable of supporting all Science Mode mission operations with no more than 20 minutes per orbit of TDRSS single access service and Multiple Access and Single Access contacts scheduled as necessary to a) meet the navigation requirements of the Spacecraft, and b) to satisfy any additional command and telemetry contact needs during non–nominal operations.

3.2.1.7.1.4 Transmission/Reception Data Rate Capability

The Spacecraft Bus shall be capable of transmitting and receiving data in accordance with the rates (which include all CCSDS overhead) shown in Tables V and VI.

The Spacecraft Bus shall be capable of transmitting the data shown in the Table VI Usage column over the link specified by the associated Data Rate, Path, and Return Link Service columns.

Table V. Forward (Command) Links

FORWARD LINK SERVICE	ANTENNA	DATA RATE (Minimum Required)	USAGE
TDRSS SSA	HGA	10 kbps	Normal Commanding – High Rate
TDRSS SMA	HGA	1 kbps	Normal Commanding – Low Rate
TDRSS SSA	Omni	125 bps	Contingency Commanding
GN S-Band	Omni	2 kbps	Emergency Commanding
Hard-Line	Umbilical	2 kbps	Commands from GSE (Pre-Launch)

Table VI. Return (Telemetry and Science) Links

RETURN LINK SERVICE	PATH	DATA RATE		USAGE
		I	Q	
TDRSS KSA	HGA	75 Mbps	75 Mbps	Primary Science Data Downlink (Real-time ~~and/or~~ Playback)
DB (X–Band)	DAS	12.5 Mbps	(12.5) Mbps	Real-Time Direct Broadcast (DB) (Not simultaneous with DP) (I–channel only, if DDL or DP' active, else same data on I&Q)
DDL (X–Band)	DAS	(12.5) Mbps	105 Mbps	Real-Time Direct Downlink (DDL) (Not Simultaneous with DP or DP') (Q–channel only, DB may be on I channel)
DP (X–band)	DAS	75 Mbps	75 Mbps	Direct Playback (DP) for Backup Science Data Downlink (Not Simultaneous With DB, DP' or DDL) (Bit Interleaved)
DP' (X–Band)	DAS	(12.5) Mbps	105	Direct Playback (DP) for Backup Science Data Downlink (Not Simultaneous With DP or DDL) (Bit Interleaved) (Q–channel only, DB may be on I channel)
TDRSS SSA	HGA	16 kbps	256 kbps	I: Housekeeping or Diagnostic/Dump Q: Housekeeping playback only
TDRSS SSA	Omni	N/A	1 kbps	(Contingency Link) Health/Safety or Diagnostic/Dump
TDRSS SMA	HGA	N/A	16 kbps	Housekeeping
Hard-Line	Umbilical	16 kbps	16 kbps	Housekeeping, Diagnostic/Dump to GSE (Prelaunch)
Hard-Line	Launch Vehicle	1 kbps		Health/Safety to Launch Vehicle (Launch/Ascent)

RETURN LINK SERVICE	PATH	DATA RATE		USAGE
		sub-carrier	carrier	
GN S-band	Omni	16 kbps	512 kbps	(Emergency Link) I: Housekeeping or Diagnostic/Dump Q: Housekeeping playback only
GN S–Band	Omni	1 kbps	1 kbps	(Emergency Link) Health/Safety

3.2.1.7.1.5 Simultaneous Downlink Services

The Spacecraft Bus design shall allow the simultaneous downlink use of the K–band Single Access (KSA) service and either S–band Single Access (SSA) or S–band Multiple Access (SMA) service.

3.2.1.7.1.6 Reserved

3.2.1.7.1.7 Reserved

3.2.1.7.1.8 Polarization

The HGA shall be capable of operating on Right Hand Circular (RHC) and Left Hand Circular (LHC) polarization, but not simultaneously, when using the TDRSS SSA and KSA services.

3.2.1.7.1.9 HGA Pointing Monitoring and Control Mechanisms

The Spacecraft Bus shall maintain ephemeris data for up to four TDRS spacecraft, and shall autonomously track selected TDRS spacecraft with the HGA as selected by ground command.

3.2.1.7.1.10 Reserved

3.2.1.7.2 TDRSS Data Communications

The HGA shall be capable of communications with a TDRS 67% of the time.

3.2.1.7.3 Omni Antenna Receive Link Margin

The receive omni system for TDRSS SSA shall have a greater than 70% **(TBR–5)** of the 4 pi steradian coverage with 3 dB link margin and a greater than 80% **(TBR–5)** coverage with 0 dB link margin.

3.2.1.7.4 Emergency Communications

3.2.1.7.4.1 GN Emergency Communications

The Spacecraft Bus shall be capable of command and telemetry communications with the Ground Network (GN).

3.2.1.7.4.2 Simultaneous Emergency and Contingency Communications

Spacecraft Bus emergency communications via GN shall not occur and will not be attempted simultaneously with contingency communication via TDRSS.

3.2.1.7.5 Direct Access Service

The Spacecraft Bus shall provide a Direct Access Service (DAS), including a direct downlink (DDL), broadcast (DB), and playback (DP) capability for the Instruments as shown in Table VII. These services shall not rely on HGA operability.

Table VII. Science Data Downlink Service Allocations

	ASTER	CERES	MISR	MOPITT	MODIS	Ancillary Data
DDL	✓					
DB					✓	✓
DP	✓	✓	✓	✓	✓	✓

3.2.1.7.5.1 DAS Modes

During science operations, the spacecraft shall accommodate the commanded selection of each of the DAS modes represented in Table V, at any duty cycle, when measured over one orbit, up to 100 percent.

The duration of any interruption in DB service during transitions between modes shall not exceed 5 sec.

3.2.1.7.5.2 DAS Transmit Polarization

The DB, DDL, and DP services shall be transmitted using Right Hand Circular Polarization.

3.2.1.7.5.3 DAS Ancillary Data

Ancillary Data transmitted in the DAS data shall be identical to that transmitted in the Ku–band services.

3.2.1.7.5.4 Reserved

3.2.1.7.5.5 Direct Broadcast (DB) Service

3.2.1.7.5.5.1 DB Data Input

The Spacecraft Bus shall accept DB data from the selected Instruments via the same data transmission path as is used for Instrument science data.

3.2.1.7.5.5.2 DB Data Processing

The Spacecraft Bus shall add fill data as necessary for transmission at the data rate specified in Table VI.

3.2.1.7.5.5.3 DB Data Transmission

The Spacecraft Bus shall transmit the DB data stream in real time via a QPSK-modulated X-band downlink.

3.2.1.7.5.6 Direct Downlink (DDL) Service

The Spacecraft Bus shall provide the DDL service whenever the "DB and DDL only" mode is selected.

3.2.1.7.5.6.1 DDL Data Input

The Spacecraft Bus shall accept DDL data from the selected Instruments via the same data transmission path as is used for Instrument science data.

3.2.1.7.5.6.2 DDL Data Processing

The Spacecraft Bus shall process the DDL data in accordance with the Path Packet Service with Grade of Service 2, as defined in CCSDS 701.00–B–1. The Spacecraft shall add fill data as necessary for transmission at the data rate specified in Table VI.

3.2.1.7.5.6.3 Reserved

3.2.1.7.5.7 Direct Playback (DP) Service

3.2.1.7.5.7.1 DP Data Processing

The Spacecraft Bus shall, on command, play back recorded science and housekeeping data at a rate commensurate with the maximum DP link rate specified in Table VI.

3.2.1.7.5.7.2 DP Data Transmission

The Spacecraft Bus shall transmit the DP data stream via a QPSK-modulated X-band downlink. Data on the I- and Q- channels shall be bit-interleaved.

3.2.1.7.5.8 Ground Station Interfaces

The Spacecraft Bus shall transmit the DAS data such that, in the direction of a ground antenna with the given elevation angle, the following Effective Isotropically–Radiated Power (EIRP) is achieved:

Elevation (deg)	EIRP (dBW)
5	13.6
40	1.5
70	–2.6
90	–3.9

3.2.1.8 Command and Data Handling

3.2.1.8.1 General

3.2.1.8.1.1 General Functionality

3.2.1.8.1.2 Spacecraft ConfigurationControl

The Spacecraft Bus shall execute ground commands for redundancy switching and loading and dumping of software and of programmable data.

3.2.1.8.1.3 CCSDS Data Formats and Protocols

They shall comply with the recommendations of the Consultative Committee for Space Data Systems (CCSDS) as follows: K–band Return, X–band, and S–band Return– CCSDS 701.00–B–1, Grade 2; S–band Forward – CCSDS 201.0–B–1, CCSDS 202.0–B–1 (COP–1), CCSDS 203.0–B–1; and CCSDS 301.0–B–1, Time Code Formats using day segmented binary milliseconds and microseconds.

3.2.1.8.1.4 Sensitivity to Transported Data

The Spacecraft shall be insensitive to the data transported.

3.2.1.8.2 Command Processing

The Spacecraft shall accept commands for both real–time and stored command execution.

3.2.1.8.2.1 Processing Data Rates

The Spacecraft Bus shall accept and process uplinked command data and computer memory load data at rates commensurate with the capacities of the ground–to–Spacecraft communications links.

3.2.1.8.2.2 Error Detection

The Spacecraft Bus shall accept FEC–coded uplinked data and transfer frames via the S–band forward links and shall perform Error Detection decoding. When errors are detected, the Spacecraft shall discard the erroneous data, notify the ground of the error and accept retransmission of the erroneous data in accordance with the COP–1 protocol.

3.2.1.8.2.3 Real–Time Command Execution

The Spacecraft shall distribute real–time commands within 1.024 second of receipt via the command links. The Spacecraft Bus shall distribute commands in the same order received.

3.2.1.8.2.4 Stored Command Processing

The Spacecraft Bus shall provide both Absolute–Time and Relative–Time Command Sequence (RTCS) stored command services. The Spacecraft Bus shall inhibit execution of classes of stored commands under control of flight software and ground command.

3.2.1.8.2.4.1 Absolute–Time Stored Commanding

The Spacecraft shall accept commands and associated execution times for Absolute–Time stored commanding. Each command shall be distributed within 1.024 second after the Spacecraft time reaches the execution time. The Spacecraft Bus shall be capable of storing at least 3000 Absolute–Time stored commands per day.

3.2.1.8.2.4.2 Relative–Time Command Sequence (RTCS) Stored Commanding

The Spacecraft Bus shall accept and store sequences of commands and associated relative execution times. Execution of these sequences shall be initiated by commands from flight software, and from the real–time and stored command services.

Each command in the sequence shall be executed at the relative time associated with it, starting at the initiation time of the sequence. The Spacecraft shall store at least 128 relative time command sequences of up to 16 commands each.

3.2.1.8.2.4.3 Stored Command Inspection/Modification

The Spacecraft shall allow the inspection and modification of stored commands and command sequences by ground controllers.

3.2.1.8.3 Reserved

3.2.1.8.4 Critical Commands

Functions controlled by critical commands shall require that three separate events occur in series before the function will execute. For hardware mechanisms, one of these three events shall be the release of a mechanical interlock which is not controlled by software (e.g. safe/arm mechanism, separation switch/wire, umbilical switch/wire). Critical commands are defined as those commands whose inadvertant execution could cause human injury or damage to the Spacecraft.

3.2.1.9 Reserved

3.2.1.10 Reserved

3.2.1.11 Reserved

3.2.1.12 Structure

The Spacecraft Bus structure shall be designed to support a total Spacecraft mass the wet mass of the spacecraft plus any available margin as specified in Table X.

The Spacecraft Bus structure shall provide alignment and rigidity as required to support Instrument pointing requirements defined in the UIIDs.

3.2.1.13 Failure Detection/Correction

3.2.1.13.1 Failure Tolerance

In the event of a failure on the Spacecraft, the Spacecraft Bus shall provide those resources and services required for Spacecraft Bus and Instrument survival. The minimum services shall include:

a. Accepting and executing commands from ground delivered via contingency or emergency links

b. Delivering Instrument commands to the intended Instruments

c. Monitoring the health and safety telemetry stream

d. Delivering the health and safety telemetry stream to the ground via contingency or emergency links

e. Providing power for all survival critical equipment

f. Maintaining spacecraft attitude

g. Providing thermal control both for operating equipment (i.e. survival critical equipment) and non–operating equipment

3.2.1.13.1.1 Single Credible Hard Failure Tolerance

The Spacecraft Bus shall perform the functions specified herein after any single credible hard failure.

3.2.1.13.1.2 Redundant Path Independence

Redundant functional paths shall be separated or protected such that no single credible event will cause loss of both paths.

3.2.1.13.1.3 Containment

No single Spacecraft functional or physical failure shall cause other failures external to the component or Instrument in which the failure occurs.

3.2.1.13.1.4 Back–up memory

The Spacecraft Bus shall maintain in non–volatile storage all computer memory loads which are critical to Spacecraft survival. These loads shall be available for use in initiation of mission operations and restoration of operations after anomalies.

3.2.1.13.1.5 Reserved

3.2.1.13.2 Failure Monitoring

3.2.1.13.2.1 Critical Failure Detectability

Failures which may threaten Spacecraft survival shall be detected and reported in the telemetry.

3.2.1.13.2.2 Health and Status checks

The Spacecraft Bus shall perform on–orbit health and status checks of all subsystems and Instruments to verify Spacecraft integrity and status.

3.2.1.13.2.3 Reserved

3.2.1.13.3 Failure Responses

3.2.1.13.3.1 General

The Spacecraft Bus shall continuously provide resources and services as required for Spacecraft Bus and Instrument survival.

3.2.1.13.3.2 Autonomous Response

3.2.1.13.3.2.1 Override

The Spacecraft shall allow the override of all autonomous anomaly responses by ground control

3.2.1.13.3.2.2 Survival Threat

The Spacecraft shall autonomously transition to a safe operating mode in each of the following cases:

a. When a failure occurs after which continued Spacecraft operation may threaten the survival of the Spacecraft

b. When it is unknown whether or not continued Spacecraft operation may threaten the survival of the Spacecraft.

The Spacecraft shall maintain the achieved safe configuration until otherwise commanded by the ground. (This does not preclude further autonomous response and safing.)

3.2.1.13.3.2.3 Not time–critical

The Spacecraft shall await ground intervention in response to anomalies which do not require time–critical action.

The Spacecraft Bus shall be capable of issuing predefined command sequences in response to selected anomalous conditions that do not require entry into a safe configuration.

3.2.1.13.4 Failure Detection

The Spacecraft Bus shall provide periodic monitoring and ground commanded testing of housekeeping equipment. The Spacecraft Bus shall transmit the data to the ground for check–out, fault detection and location of faults to the point at which a redundant path is available.

3.2.1.14 Software

3.2.1.14.1 General

3.2.1.14.1.1 Integrity and Revision Verification

The Spacecraft Bus flight software shall incorporate provisions for verifying the integrity of and the revision of loaded software via telemetry.

3.2.1.14.1.2 Computer Program Implementation

Spacecraft Bus components which comprise computer programs shall, where practical, be implemented as software and be reprogrammable on orbit. Where this is impractical, the computer programs shall be embodied in non–volatile memory (i.e., implemented as firmware) which is not reprogrammable on orbit.

3.2.1.14.1.3 Reserved

3.2.1.14.1.4 Reserved

3.2.1.14.2 Software Development

3.2.1.14.2.1 Development Documentation

All Spacecraft Bus software with greater than 5000 software lines of code to be implemented shall be developed in compliance with the NASA Standard Software Life Cycle defined in SMAP 4.0 and documentation standards defined in NASA–STD–2100–91, and in compliance with the policies defined in 421–10–03 (EOS AM Project Spacecraft Bus Software Management Plan).

3.2.1.14.2.2 Life Cycle

Adaptations to the life cycles specified in the documents of 3.2.1.14.2.1 shall be considered when the Source Lines of Code (SLOC) to be implemented are greater than 500 and equal to or less than 5000. Life cycle and documentation standards defined in NASA–STD–2100–91 do not apply when the SLOC to be implemented are equal to or less than 500.

3.2.1.14.2.3 Reserved

3.2.1.14.2.4 Programming Language

Where practical, all Spacecraft Bus software shall be developed in the Ada programming language as per ANSI/MIL–STD–1815A. Where Ada is not used, another appropriate high–level programming language shall be used if practical. Spacecraft Bus software shall be developed using assembly language only where dictated by software performance (i.e., speed) requirements or by the lack of an appropriate high–level language for the host processor.

3.2.1.14.2.5 Flight Software Maximum Utilization

All Spacecraft Bus software shall comply with the maximum utilization requirements set forth in Table VIII at the times of the various listed events. All Spacecraft Bus firmware shall comply with the maximum utilization requirements set forth in Table IX at the times of the various listed events.

Table VIII. Flight Software Maximum Utilization

Parameter	PDR	CDR	FRR	Launch
RAM	42%	51%	57%	60%
CPU	35%	42.5%	47.5%	50%
I/O	35%	42.5%	47.5%	50%

Table IX. Flight Firmware Maximum Utilization

Parameter	PDR	CDR	FRR	Launch
RAM	49%	59.5%	66.5%	70%
CPU	56%	68%	76%	80%
I/O	56%	68%	76%	80%

3.2.2 Physical Characteristics

3.2.2.1 Mass Properties

The total mass, including contingency mass, of the Spacecraft Bus, propellant, 11,065 lb. Instrument masses will be at or below the levels specified in the UIIDs.

3.2.2.2 Spacecraft Coordinate System

A right–hand, orthogonal, body–fixed reference coordinate system shall be used for the Spacecraft.

3.2.3 Reliability

3.2.3.1 Mission Success

The Spacecraft Bus shall provide the Instruments with the minimum resources and services specified herein for a mission life of five years. The ability to transmit all recorded science data to the EOSDIS via Ku–band TDRSS or X–band DAS links shall be considered the minimum science transmission capability required for success.

3.2.3.2 Reserved

3.2.3.3 PAR Compliance

The Spacecraft Bus reliability program shall comply with the requirements of GSFC 420–05–02.

3.2.4 I&T Accommodations

3.2.4.1 General

3.2.4.1.1 Maintenance Equipment Accessibility

Items which for safety reasons may require prelaunch maintenance shall be readily accessible.

3.2.4.1.2 I&T Frequent Access Equipment

Items requiring frequent access during I&T or other prelaunch operations shall be accessible during I&T.

3.2.4.1.3 Reserved

3.2.4.1.4 Maintenance/Accessibility of Stored Flight Equipment

All flight equipment which would require maintenance during a storage period of 5 years or less shall be accessible when the Spacecraft is in its stored configuration.

3.2.4.1.5 Leak Detection of Sealed Hardware

Sealed hardware shall allow access by leak detection apparatus at the component level of assembly and, as practical, at the Spacecraft level of assembly.

3.2.4.1.6 Modularity

The Spacecraft shall be of modular construction to the extent practical to facilitate I&T.

3.2.4.2 Susceptibility

3.2.4.2.1 Fragile Components

All Spacecraft components which are fragile or otherwise susceptible to damage shall, where practical, be guarded or located so as to reduce this susceptibility.

3.2.4.2.2 Mechanical Stops for Calibration/Adjustment Equipment

Controls and actuators for calibration or adjustment shall incorporate mechanical stops where necessary to prevent damage.

3.2.4.2.3 Location of Adjustment Devices

Sensitive adjustment controls and actuators shall be located or guarded to protect them from inadvertent perturbation.

3.2.4.3 Maintenance Equipment

3.2.4.3.1 Standardization

The Spacecraft Bus shall utilize standardized hardware, software, data formats, and procedures to facilitate maintenance.

3.2.4.3.2 Distinguishability

Items of identical or similar form which have different functional characteristics shall be readily identifiable and distinguishable through marking or other means.

3.2.4.3.3 Existing Ground Equipment Use

The Spacecraft Bus shall be designed to use existing ground equipment to perform maintenance functions, wherever practical, rather than requiring the design of new equipment.

3.2.4.3.4 New Maintenance Equipment Use

When new maintenance equipment is required to maintain Spacecraft elements which are part of a group of physically or functionally identical or similar elements, the equipment shall be designed to perform its task(s) on each element of that group, where practical.

3.2.4.3.5 Prelaunch Support

The Spacecraft shall support prelaunch integration and checkout of the Spacecraft by incorporating interfaces for external stimuli or simulators, where appropriate, and by performing status checks and executing sample command loads.

Command and housekeeping telemetry capabilities shall be available both with and without RF links.

3.2.4.3.6 Test Equipment Environment

The test equipment will not subject any flight equipment to environments beyond those defined in PS20005404, Verification Specification.

3.2.4.3.7 Verifiable Test Equipment

All test equipment shall be functionally verifiable.

3.2.4.3.8 Test Equipment Calibration

Spacecraft test equipment shall be calibrated in accordance with GSFC 420–05–02.

3.2.4.4 Component Maintainability

3.2.4.4.1 Improper Installation Design

Equipment module design shall preclude improper installation to the Spacecraft.

3.2.4.4.2 Electrical Connector Design

All electrical connectors shall be selected, sized, keyed, and/or marked such that incorrect attachment to the mating connector is prevented.

3.2.4.4.3 Attachment of Connectors

All connectors shall attach such that the connectors cannot be inadvertently unlocked during ground operations.

3.2.4.4.4 Valve Position

The position (open, closed, intermediate (where applicable)) of all valves shall be electronically or analytically ascertainable.

3.2.5 Environment Conditions

3.2.5.1 Environments

The Spacecraft Bus shall meet the performance requirements specified herein during and after exposure to the environmental conditions defined in the General Interface Specification (GIS), IS20008501.

3.2.5.2 Reserved

3.2.5.2.1 Reserved

3.2.5.2.2 Launch Environment Performance Requirements

The Spacecraft shall perform as specified herein before, during and after exposure to worst case launch environment induced by the Titan IV and Atlas IIAS launch vehicles, as defined in the Titan IV Users Handbook, and in the Mission Planners Guide for the Atlas Launch Vehicle Family.

3.2.5.2.3 Contamination

The Spacecraft Bus shall comply with the contamination requirements set forth in NASA 420–05–02, and with the requirements of the Contamination Control Plan.

3.2.5.3 Electromagnetic Radiation

3.2.5.3.1 EMC Documentation

The Spacecraft Bus shall comply with the electromagnetic compatibility requirements of the EMC Control Plan PN20005869.

3.2.5.3.2 Ionizing Radiation Design Margin

The Spacecraft Bus design, except its solar array cells design, shall include a design margin of 2 for the expected ionizing radiation environment.

3.2.5.3.3 Single Event Latch–ups

Spacecraft hardware shall be immune to latch–up from single event upsets induced by cosmic rays where possible. If this immunity is not possible, the spacecraft hardware shall be protected by appropriate latch–up detection and recovery circuitry as defined within section 6.4 of the General Interface Specification, IS20008501. The Spacecraft hardware shall also be capable of withstanding single event upsets and transients induced by the singular or combined effects of cosmic rays, solar flares, and geomagnetically trapped protons in the spacecraft mission environment as defined within section 6.4 of the General Interface Specification, IS20008501.

3.2.5.4 Operational Constraints

Where practical, the Spacecraft shall not impose operational constraints due to natural environment conditions during checkout, launch, and on–orbit operations.

3.2.6 Transportability

3.2.6.1 Transportation Environment

The Spacecraft shall be capable of being transported in an environmentally–controlled shipping container. The imposed environmental levels will not exceed those specified for transportation in the GIS.

3.2.6.2 Handling Features

The Spacecraft and/or GSE designs shall include handling features which reduce the likelihood of damage to any flight equipment.

3.3 Design and Construction

3.3.1 Materials, Processes, and Parts

3.3.1.1 Material Selection Documentation

Materials selection and documentation shall comply with the requirements of GSFC 420–05–02, Performance Assurance Requirements for EOS Observatories.

3.3.1.2 Material Selection Criteria

Materials shall be selected on the basis of natural and induced environments compatibility, functional acceptability and suitability, extended life characteristics, technological maturity, manufacturability, inspectability, contamination characteristics, specific strength, mutual compatibility, availability, cost, and safety.

3.3.1.3 Reserved

3.3.1.4 Reserved

3.3.1.5 Reserved

3.3.2 Nameplates and Product Marking

3.3.2.1 Non–Flight Equipment Marking

Equipment not suitable for flight use shall be marked appropriately to prevent accidental substitution.

3.3.2.2 Component Labeling Visibility

Component labeling shall be visible when the component is installed in the parent assembly or stowed. Labels shall be installed such that they are readable by the unaided human eye.

3.3.2.3 Identifiability of Wires, Cable, and Fluid Lines

Wire bundles, cables, and fluid lines shall be functionally identifiable at each end.

3.3.2.4 Labeling of Test and Adjustment Points

All test points, adjustment devices, and alignment points visible at the integrated Spacecraft level shall be labeled for positive identification.

3.3.2.5 Design/Marking for Orientation

The proper orientation for placing items in storage or transportation containers shall be obvious by design or marking.

3.3.3 Interchangeability

Each equipment shall be directly interchangeable in form, fit, and function with other equipment of the same part number except that equipment furnished in matched sets shall be interchangeable only as matched sets.

3.3.4 Fracture Control

The tracking and control procedures defined in GSFC–731–0005–83. (Rev B.) shall be applied to the following Spacecraft elements:

a. pressure vessels classified as hazardous Leak–before–burst per MIL–STD–1522A,

b. Beryllium elements loaded above 25% of ultimate tensile strength, and

c. glass elements stressed above 10% of their ultimate tensile strength.

3.3.5 Safety

3.3.5.1 General

3.3.5.1.1 Programmatic Requirements

The Spacecraft safety program shall meet the programmatic requirements of GSFC 420–05–02, Performance Assurance Requirements for EOS Spacecrafts and the Joint Eastern/Western Space and Missile Center (ESMC/WSMC) Policy for Encapsulated Instruments (if applicable).

3.3.5.1.2 WSMCR Requirements

The Spacecraft shall comply with the requirements of WSMCR 127–1.

3.3.5.2 Hazard Control

3.3.5.2.1 General

Where practical, hazards shall be eliminated or removed through appropriate design measures. Hazards which cannot be eliminated or removed shall, where practical, be prevented through incorporation and use of safety devices or features. Remaining hazards shall be controlled through the use of warning devices and/or special procedures.

3.3.5.2.2 Automatic Hazard Detection and Safing

Automated detection and safing of hazards which may cause personnel injury or loss of the Spacecraft shall be independent of those subsystems being monitored. Where practical, the detection and safing of lesser hazards shall also follow this practice.

3.3.5.2.3 Safety Interlock Mechanisms/Techniques

The Spacecraft Bus shall incorporate safety interlock mechanisms, implemented in hardware or software to prevent the execution of predefined commands which are potentially hazardous to personnel or to the Spacecraft without prior confirmation or arming by ground operators.

3.3.5.2.4 Reserved

3.3.5.2.5 Liquids and Gasses

The design of subsystems and components which utilize liquids or gasses shall preclude hazards due to the release of such fluids.

3.3.5.2.6 Test Equipment Safety Interlocks

Test equipment shall incorporate safety interlocks and/or safety features.

3.3.5.2.7 Safety Feature Indications

Any safety feature included in any Spacecraft test equipment shall give a visual, auditory, or electronic indication of activation when it is activated.

3.3.5.3 Material Safety

The Spacecraft Bus shall select only materials identified in the Program Approved Materials and Processes List, 20008650.

3.3.5.4 Component Safety

3.3.5.4.1 Arming Mechanisms

The Spacecraft Bus shall incorporate arming mechanisms which allow explosive devices to be armed as near to the time of expected use as feasible, and to be disarmed promptly when no longer in use.

3.3.5.4.2 Pressurized Components

All Spacecraft pressurized components shall be designed to withstand the testing described in MIL–STD–1522A, Section 5, Approach A, using appropriate factors of Safety (FS) as defined in the IS20008501, General Interface Specification.

Spacecraft pressurized components shall comply with the Joint Eastern/Western Space and Missile Center (ESMC/WSMC) Policy for Ground Transportation/ Handling of Hazardous Materials and Pressurized Vessels used on Missiles and Space Vehicles.

3.3.6 Human Performance/Human Engineering

3.3.6.1 Workmanship

Spacecraft workmanship shall comply with the requirements of NHB 5300.4 (3A–1, G–K).

3.4 Precedence

3.4.1 Precedence of Design Criteria

Design decisions shall accommodate compliance with safety requirements specified in this document before accommodating any other considerations (e.g., cost, schedule, preformance)

3.5 Reserved

3.6 Reserved

3.7 Subsystem and Major Assembly Requirements

All spacecraft equipment shall comply with the requirements of the General Interface Specification, IS20008501, and the Verification Specification, PS20005404, unless explicitly excepted from specific requirements in the Notes section of the affected equipment's performance specification.

3.7.1 Subsystem Requirements

3.7.1.1 General Subsystem Requirements

3.7.1.1.1 General Subsystem Functions

Each Spacecraft Bus subsystem shall perform all functions allocated to it, unless otherwise specified, throughout mission life.

Each subsystem shall provide resources or services as required for Spacecraft and Instrument survival.

3.7.1.1.2 Subsystem Mass Allocations

Each subsystem shall not exceed its mass allocation as indicated in Table X.

3.7.1.1.3 Subsystem Orbit–Averaged Power Allocations

All subsystems shall provide the minimum capability demanded of them during each mode defined in 3.1.4.2 without drawing greater than the power levels presented in Table XI for that mode.

3.7.1.1.4 Reserved

3.7.1.1.5 Subsystem HGA Pointing Error Allocations

Each subsystem shall contribute no more than its allocated error to the high gain antenna pointing error as indicated in Table XII.

Table X. Subsystem Mass Allocations

Subsystem	Allocation (lb)
GN&CS	410
TCS	390
SMS	3150
COMS	455
C&DHS	950
PROPS	135
EPS	1390
EAS	545
Total Allocated to Spacecraft Bus	**7425**
Unallocated Reserve	0
Total Spacecraft Bus	**7425**
Manager's Reserve	425(**TBR–6**)
Instruments	2455
Dry Spacecraft	**10305**
Propellant	760
Wet Spacecraft	**11,065**
Atlas LV Lift	11,415
Atlas LV Interface Equipment	350
Margin	0

Table XI. Power Resource Allocation [Watts][1]

Subsystem	Ground Test Mode[1]	Launch/ Ascent Mode[1]	Standby Mode[1]	Delta-V Mode[1]		Science Mode[2]		Survival Mode[2]	Safe Mode[2]	
				level 2 (max)	level 0 (min)	BOL	EOL		Earth-Pointing lev 8 (max)	Sun-Pointing lev 0 (min)
GN&CS	179	220	220	220	220	220	220	176	220	176
C&DHS	211	211	373	360	211	360	360	211	360	211
TCS[3]	56TBR-7	56TBR-7	296TBR-7	296TBR-7	780TBR-7	296TBR-7	150TBR-7	780TBR-7	296TBR-7	800TBR-7
EPS	180	190	190	190	190	190	190	190	190	180
COMM	94	174	340	340	174	340	340	174	340	174
PROPS[4]	37	37	5	168	168	5	5	5	5	5
SMS	0	0	0	0	0	0	0	0	0	0
EAS[5]	5	5	5	5	5	5	5	5	5	5
Unallocated Reserve	N/A	N/A	N/A	N/A	N/A	N/A	65	N/A	N/A	N/A
Total Housekeeping Bus	762	893	1429	1579	1748	1416	1335	1541	1416	1551
Instruments	TBD-5	TBD-5	1195	1195	TBD-5	1195	1195	TBD-5	1195	TBD-5
Total Spacecraft	TBD-6	TBD-6	2624	2774	TBD-6	2611	2530	TBD-6	2611	TBD-6
Requirement	N/A	N/A	N/A	N/A	N/A	N/A	2530	N/A	N/A	N/A
Margin	N/A	N/A	N/A	N/A	N/A	N/A	0	N/A	N/A	N/A

(1) These allocations are the maximum allowable average power consumptions to satisfy subsystem performance requirements for each operating mode.

(2) These allocations are the maximum allowable one oerbit average power consumptions to satisfy subsystem performance requirements for each operating mode.

(3) The power allocation for the Thermal Control Subsystem includes an allocation for orbit average heater power at Spacecraft dynamic steady state. Except for the EOL Science mode, all TCS power allocations are based on BOL conditions. These power allocations include power to operate instrument thermal accommodation equipment which is supplied by the Spacecraft Provider.

(4) The PROPs allocations are for propulsion subsystem components only. The HCEs, EPC, BDU, and FDB in the propulsion module are attributed to other subsystems.

(5) The EAS power allocation is for the power required to convert the 120 V primary power to 28 V power. This table of power allocations is meant to specify the Spacecraft load which must be supplied by the EPS. Power distribution harness losses are considered to be an inefficiency of the power and electrical accommodation subsystems rather than a power load.

Table XII. HGA Pointing Error Allocations

Subsystem	Allocation (3σ/axis) Calibrated deg	Type
GN&CS[1]	0.035 0.15	static dynamic
SMS[2]	0.06 0.09	static dynamic
COMS[3]	0.035 0.115	static dynamic
Total Static Total Dynamic Total Allocated/axis	0.078 0.209 0.287	
Total Allocated Circular Unallocated Requirement	0.330 0.070 0.400	

[1] includes errors due to spacecraft attitude determination, spacecraft attitude control, spacecraft ephemeris, TDRSS ephemeris, HGA control, and static error calibration accuracy

[2] includes errors due to structure and HGA boom flexible dynamics, positioning, measuring, 1–g effects, launch shift, thermal distortion, and moisture distortion

[3] includes errors due to internal misalignments and flexible dynamics outboard of the gimbals.

3.7.1.1.6 Subsystem Attitude Pointing Error Allocations

Each subsystem shall contribute no more than its allocated error to the Spacecraft pointing accuracy, pointing knowledge, pointing jitter, and pointing stability, in accordance with Tables XIII through XVI.

3.7.1.1.7 Subsystem Failure Tolerance

Each subsystem shall be single credible hard failure tolerant. For analysis purposes, EAS failures shall be treated as failures of the subsystem whose EAS–provided services are interrupted.

3.7.1.1.8 General Subsystem Commands and Telemetry

3.7.1.1.8.1 Subsystem Commands

Each subsystem shall accept, and execute upon receipt, commands delivered to it via the C&DHS.

3.7.1.1.8.1.1 Reserved

Table XIII. Pointing Knowledge Allocations at Instrument Interface

Subsystem	Allocation (Arc–sec Zero–to–Peak 3 sigma)		
	Roll	Pitch	Yaw
GN&CS Dynamic Spec[1]	15.2	14.5	10.7
Structures Dynamic Spec[2]	3.3	5.2	3.3
System Dynamic Allocation	15.6	15.4	11.2
GN&CS Static Spec[3]	10.0	10.0	10.0
Structures Static Spec[4]	41.8	64.0	40.5
System Static Allocation	43.0	64.8	41.7
System Total	58.6	80.2	52.9
Unallocated	31.4	9.8	37.1
Requirement[5]	90.0	90.0	90.0

1 Includes errors due to attitude and ephemeris determination and a structure dynamics contribution of 6.5, 5.2, and 5.7 arcsec roll, pitch and yaw.

2 Includes errors due to thermal distortion.

3 Includes measurement, thermal distortion, moisture distortion and launch shift errors internal to the star tracker.

4 Includes measurement, thermal distortion, gravity, moisture distortion, launch shift and remate errors not associated with the star tracker.

5 Instrument interface requirement from RD.

3.7.1.1.8.1.2 Reserved

3.7.1.1.8.1.3 Reserved

3.7.1.1.8.1.4 Reserved

Table XIV. Pointing Accuracy Allocations at Instrument Interface

Subsystem	Allocation (Arc–sec Zero–to–Peak 3 sigma)		
	Roll	Pitch	Yaw
GN&CS Dynamic Spec[1]	18.5	17.2	13.1
Structures Dynamic Spec[2]	3.3	5.2	3.3
System Dynamic Allocation	18.8	18.0	13.5
GN&CS Static Spec[3]	10.0	10.0	10.0
Structures Static Spec[4]	51.5	70.7	83.3
System Static Allocation	52.5	71.4	83.9
System Total	71.3	88.7	97.4
Unallocated	78.7	61.3	52.6
Requirement[5]	150.0	150.0	150.0

1 Includes errors due to attitude and ephemeris determination and attitude control. 1.5 of the GN&CS requirement is due to internal (HGA, SA, RWA imbalance) disturbances.

2 Includes errors due to thermal distortion.

3 Includes measurement, thermal distortion, moisture distortion and launch shift errors internal to the star tracker.

4 Includes measurement, thermal distortion, gravity, moisture distortion, launch shift, positioning, and remate errors not associated with the star tracker.

5 Instrument interface requirement from RD.

Table XV. Short-Term Pointing Stability/Jitter Allocations

Subsystem	Allocation (Arc–sec Peak–to–Peak 3 sigma)					
	1.8 Seconds			9 Seconds		
	Roll	Pitch	Yaw	Roll	Pitch	Yaw
GN&CS Spec[1] at instrument interfaces	2.2	2.1	1.6	7.7	8.1	7.5
SMS Spec[2] at instrument interfaces	0.0	0.0	0.0	0.0	0.0	0.0
Instrument Flex[3]	0.6	0.6	0.6	2.0	2.0	2.0
System Allocation[4]	2.8	2.7	2.2	9.7	10.1	9.5
System Unallocated	0.7	0.8	6.8	8.3	1.9	50.5
Boresight Requirement[5]	3.5	3.5	9.0	18.0	12.0	60.0

1 Includes errors due to attitude and ephemeris determination, and attitude control resulting from GN&CS algorithms or hardware and due to internal and external disturbances. Out of the total GN&CS Specification 1.9, 1.8, 1.3 arc–sec per 1.8 seconds and is due to Instrument disturbances. Also, out of the total GN&CS Specification 0.4, 0.7, 0.7 arc–sec per 1.8 seconds and 1.8, 1.2, 2.0 arc–sec per 9 seconds housekeeping (HGA, SA, RWA imbalance) disturbances.

2 Includes errors due to dynamic thermal distortion.

3 These allocations will be documented in the SWIR UIID for 1.8 seconds, and the VNIR UIID for 9.0 seconds.

4 System allocation is the RSS of the GN&CS Specification and the SMS Specification added to the Instrument Flex allocation.

5 Represents the tightest Instrument requirement at the Instrument boresight, specifically, the SWIR requirement at 1.8 seconds and the VNIR requirement at 9 seconds.

Table XVI. Long-Term Pointing Stability/Jitter Allocations

Subsystem	Allocation (Arc–sec Peak–to–Peak 3 sigma)			
	420 Seconds			
	Roll	Pitch	Yaw	
GN&CS Spec[1]	13.4	10.6	12.2	
SMS Spec[2]	0.9	0.4	0.1	
Instrument Flex[3]	1.0	1.0	1.0	
System Allocation[4]	14.4	11.6	13.2	
System Unallocated	1.6	4.4	2.8	
Boresight Requirement[5]	16.0	16.0	16.0	

1 Includes errors due to attitude and ephemeris determination, and attitude control resulting from GN&CS algorithms or hardware and due to internal and external disturbances. is due to Instrument disturbances. Also, out of the total GN&CS Specification is due to housekeeping (HGA, SA, RWA imbalance) disturbances.

2 Includes errors due to dynamic thermal distortion.

3 These allocations will be documented in the MISR UIID.

4 System allocation is the RSS of the GN&CS Specification and the SMS Specification added to the Instrument Flex allocation.

5 Represents the tightest Instrument requirement at the Instrument boresight, specifically, the MISR requirement at 420 seconds.

3.7.1.1.8.1.5 Function Override/Inhibit Commands

All subsystems shall accept and execute commands to override or inhibit the execution of autonomous functions which may interfere with Spacecraft operations or jeopardize the health of the Spacecraft. Such functions shall include, as a minimum, those which may cause:

a. The transition of the Spacecraft out of science mode

b. The issuance of any commands whose execution may be inadvisable after a particular anomaly, and

c. The issuance of any commands which would configure the subsystem to follow a particular redundant path (one which may have been assessed to be faulty)

3.7.1.1.8.2 Subsystem Telemetry

3.7.1.1.8.2.1 Reserved

3.7.1.1.8.2.2 Health and Safety Telemetry Content

The health and safety telemetry provided by each subsystem in all Spacecraft modes shall be sufficient to support all operations. These data shall indicate the current status of the subsystem, and shall allow assessment and monitoring of the subsystem.

Subsystem and component failures which may threaten Spacecraft survival shall be detectable in health and safety telemetry.

3.7.1.1.8.2.3 Reserved

3.7.1.1.8.2.4 Housekeeping Telemetry Content

The housekeeping telemetry provided by each subsystem shall allow ground controllers to assess the operational state of the subsystem, monitor critical subsystem functions, and aid in fault detection and correction.

Subsystem housekeeping telemetry shall, as a minimum, contain the following:

a. Redundancy status of the subsystem and components

b. Health and safety status data

c. Indications of resource usage

d. Indications of sensed failures or anomalies, if any

e. Data suitable for verifying execution of each Spacecraft command

f. Notification of all autonomous switching between redundant paths

Each active Spacecraft subsystem shall provide, during all modes, telemetry points necessary for monitoring the operation of its hardware and software components. Any autonomous corrective actions taken shall be reported to the ground via housekeeping telemetry. This report shall be periodically repeated until acknowledged from the ground.

3.7.1.1.8.2.5 Housekeeping Telemetry Mode Dependence

3.7.1.1.9 General Subsystem Power and Ground Interfaces

Each subsystem shall receive all operational and survival power from the EPS via the EAS.

All subsystem equipment shall be designed to operate from 120 V DC power with ±4% regulation.

Each subsystem shall withstand EPS interface voltage levels up to 132 V DC without damage.

Each subsystem shall utilize the EAS-provided single-point ground reference.

3.7.1.1.10 Reserved

3.7.1.1.11 General Subsystem Computer Programs

Each subsystem containing code used to ensure Spacecraft survival shall maintain that code in non–volatile media for initiation or restoration after anomalies.

3.7.1.1.12 Reserved

3.7.1.1.13 Reserved

3.7.1.1.14 General Subsystem Interface Standardization

Each subsystem and component shall utilize the standard interfaces defined in the GIS, unless an exceptionis explicitly noted in its specification.

3.7.1.2 Electrical Power Subsystem (EPS)

3.7.1.2.1 EPS Functions

The EPS shall provide all necessary power to all subsystems and Instruments.

The EPS shall provide the capability to connect and disconnect individual feeds to Instruments and the HGA.

3.7.1.2.2 EPS Power Levels

3.7.1.2.2.1 Average Power Delivery

The EPS shall be capable of providing a total of 2.53kW orbit average power (EOL) to the housekeeping and Instrument loads when the voltage drop over the primary power distribution harness does not exceed 2% of the primary power voltage.

3.7.1.2.2.2 Reserved

3.7.1.2.3 EPS Power Voltage

The EPS shall deliver 120 V DC ±4% power to Instrument and subsystem interfaces.

The voltage delivered to Instrument and subsystem interfaces shall not exceed 132 V DC under any fault conditions.

3.7.1.2.4 Reserved

3.7.1.2.5 EPS Fault Detection and Protection

The EPS shall incorporate fuses to clear system faults.

The EPS shall protect power sources against overloads and faults in the distribution subsystem or in user loads.

The EPS shall protect user loads against adverse impact or damage due to other user load faults.

The EPS shall protect its distribution subsystem against faults or overloads in the EPS or in user loads.

All power distribution wiring shall be either current–limited or short–circuit protected.

3.7.1.2.6 EPS Solar Array

The EPS shall incorporate photovoltaic GaAs solar cell arrays for the conversion of incident solar energy to electrical energy.

The EPS shall provide the mechanisms for deployment of the solar array boom and blanket.

Upon entering sun–pointing safe mode the solar array shall slew to a pre–designated index point.

3.7.1.2.7 EPS Batteries

The EPS shall utilize batteries to store electrical energy to accommodate power needs during the eclipse portion of the orbit.

The EPS shall incorporate means of charging, discharging, and controlling the charging and discharging of batteries.

The battery cell pressure vessels shall comply with the factor of safety requirements of the GIS.

During the operational mission phase, and under the average load conditions defined above, the battery depth of discharge (DOD) shall not exceed 30% when all cells are active, or 35% when one cell has failed. Batteries shall perform as specified after occasional discharges to a DOD of up to 65%.

3.7.1.2.8 EPS Solar Array Pointing Control

The EPS shall accept rate commands to rotate or slew the solar array to support power requirements during all post–separation mission phases and shall generate and supply necessary motor drive signals to the SMS.

The EPS shall provide a range of selectable rotation rates consistent with once-per-orbit array rotation in any orbit between the shortest-period and the longest-period orbits which could be encountered in any Mission Phase between launch vehicle separation and the End-Of-Mission Phase. Rate selection granularity shall be consistent with once-per-day ground selection of the step rate while maintaining sufficient power capability to support any Spacecraft Mode. Additionally, the EPS shall provide selectable forward slew rates consistent with a 180 degree array rotation in 17 minutes or less.

The EPS shall accept commands to halt the solar array rotation and to hold the array at any angular position, and shall generate and provide the necessary motor drive signals to the SMS.

During Safe Mode, the EPS shall generate and provide the SMS with the necessary motor drive signals to nominally track the sun to meet Safe Mode power requirements. This control shall be based on the data from the array-mounted sun sensor. A ground-commanded open-loop rate control mode shall also be available in Safe Mode. Upon entering sun–pointing safe mode the solar array shall slew to a pre–designated index point.

3.7.1.2.9 EPS Operations Support

The EPS shall incorporate means for individually connecting and disconnecting Instruments from the power distribution subsystem during ground operations.

3.7.1.2.10 EPS Ancillary Data Support

The EPS shall provide solar array current data to the FSWS for inclusion in the ancillary data stream to the Instruments. This data shall be no greater than 0.5 sec old when supplied to the FSWS.

3.7.1.3 Thermal Control Subsystem (TCS)

3.7.1.3.1 TCS Functions

The TCS shall maintain all Spacecraft Bus assemblies, and other subsystem components within their specified thermal limits during all mission phases.

The TCS shall perform heat acquisition, transport, and rejection for Spacecraft Bus subsystems and assemblies, and for Instruments which are thermally controlled by the CPHTSs.

3.7.1.3.2 TCS Solar Entrapment Protection

The TCS shall protect against solar entrapment due to module or Instrument placement on the Spacecraft.

3.7.1.3.3 Coldplate Heat Load Range

The TCS shall maintain coldplate interface temperatures within the specified operational range under all coldplate heat load conditions between 10% of the maximum cold plate capacity and 100% of the projected Instrument maximum heat loads.

3.7.1.3.4 TCS Operations Support

During nominal operations, the TCS shall not rely on any ground commands to meet temperature maintenance requirements.

3.7.1.3.5 TCS Operations Interaction

The TCS shall maintain all Instrument, subsystem, and component interfaces within specified limits under all combinations of the following:

a. Changing Spacecraft operating modes and configurations within normal operating bounds

b. Changing Instrument operating modes and configurations within normal operating bounds

c. Changing component power profiles within normal operating bounds

Thermal control of any Instrument shall not depend on the operational state of any other Instrument.

3.7.1.3.6 Reserved

3.7.1.3.7 Reserved

3.7.1.3.8 TCS I&T Support

The TCS shall allow Instrument or Major Assembly removal from the Spacecraft prior to launch without requiring disassembly of the TCS.

3.7.1.3.9 TCS Leak Detection

The TCS and/or GSE shall incorporate the necessary equipment to enable the detection and repair of leaks in the TCS during ground operations.

The TCS shall provide telemetry suitable for the detection of leaks in the TCS on–orbit.

3.7.1.3.10 TCS Surface Degradation and Contamination

Thermal control coatings used in the TCS shall be non–degradable or degradation–limited to the extent that no Spacecraft contamination or thermal performance requirements will be violated due to coating degradation.

3.7.1.3.11 TCS Heater Margin

As a goal, each TCS heater shall be capable of providing 25% more heat than the maximum heat required to comply with thermal control requirements.

3.7.1.3.12 TCS Radiator Margin

As a goal, TCS radiators which are actively controlled (i.e., modulated), if any, shall have a hot-case heat rejection margin of at least 10%.

3.7.1.4 Guidance, Navigation, and Control Subsystem (GN&CS)

3.7.1.4.1 GN&CS Attitude Determination and Control Functions

The GN&CS shall determine and control the Spacecraft attitude in all modes during all phases following the Launch/Ascent phase.

3.7.1.4.2 GN&CS Attitude Actuators

The GN&CS shall utilize reaction–wheel assemblies (RWAs) for primary attitude control.

The GN&CS shall utilize magnetic torquers as the primary means for momentum unloading.

3.7.1.4.2.1 Attitude Determination and Control Performance

The GN&CS shall maintain an Earth–based attitude to support the Spacecraft science mode pointing requirements.

3.7.1.4.2.2 Attitude Slews

The GN&CS shall perform attitude slew maneuvers for Earth acquisition, reacquisition, orbit acquisition, orbit trim and orbit maintenance delta–V maneuvers.

3.7.1.4.2.3 Launch Sequence Attitude Control

The GN&CS shall maintain a standby status when attached to the launch vehicle and shall initiate attitude acquisition upon launch vehicle separation.

The GN&CS shall acquire an Earth–based Spacecraft attitude within 30 minutes from launch vehicle separation.

3.7.1.4.2.4 Uncompensated Disturbances

The GN&CS shall perform as specified herein in the presence of uncompensated momentum and disturbance torques from Instruments and from subsystems.

3.7.1.4.2.5 Momentum Unloading

The GN&CS shall perform a reaction wheel momentum unloading function that uses propellant only as a backup and that maintains each reaction wheel speed within 75% of capacity.

3.7.1.4.3 GN&CS Navigation Functions

The GN&CS shall determine the Spacecraft orbit position during all phases following the Launch/Ascent phase, and in all modes except Safe Mode, providing sufficient TONS tracking data or uplinked backup ephemeris data is available.

3.7.1.4.3.1 Primary Navigation

Primary GN&CS navigation functions during Science Mode shall be performed via the use of the TDRSS Onboard Navigation System (TONS), using Doppler tracking data provided by COMS during scheduled TDRSS navigation tracking periods.

The TONS on–board estimate of orbital position knowledge shall be accurate to within 150 meters/axis, 3σ, during science mode, assuming TDRSS navigation contacts as necessary.

3.7.1.4.3.2 Backup Navigation

The GN&CS shall propagate ephemeris data uplinked from the ground.

3.7.1.4.4 GN&CS Solar Array Pointing Control

The GN&CS shall rotate or slew the solar array to support power requirements during all modes except Safe Mode during all post-array-deployment operations.

The GN&CS shall control pointing of the Solar Array based on Solar Array position data by providing step rate commands to the Solar Array Drive.

The GN&CS shall, on command, cease commanding the solar array motion.

3.7.1.4.5 GN&CS HGA Pointing Control

The GN&CS shall control pointing of the HGA based on position data received from the COMS.

The GN&CS shall, on command, control the HGA.

3.7.1.4.6 GN&CS Propulsive Control

The GN&CS shall support propulsive operations for delta–V and attitude control maneuvers, and for backup momentum unloading. The GN&CS shall control PROPS thrusters for these operations by providing thruster selection and pulse width commands to PROPS on a periodic basis.

During all phases, the GN&CS shall perform all required propulsive delta–V and attitude slew maneuvers, controlling actuator sequencing such that inclination adjust delta–V maneuvers, including the slews, may be initiated and completed during the eclipse period.

3.7.1.4.7 GN&CS Ancillary Data Support

The GN&CS shall derive all Spacecraft orbital position, velocity, attitude error, and attitude rate information for inclusion in ancillary data.

The GN&CS shall derive solar and lunar position information for inclusion in ancillary data.

The GN&CS shall provide magnetic torquer coil current information for inclusion in ancillary data.

The GN&CS shall reference all pointing data in ancillary data to the navigation base, and accuracy and knowledge to the earth's center.

The GN&CS-provided ancillary data shall be time-correlated such that validity times may be determined, and shall be provided within 0.5 seconds of the time of validity.

Position data shall be time–correlated to 0.1 msec (0.8 meters equivalent).

Attitude data shall be time–correlated to within 3 msec.

3.7.1.4.8 GN&CS Safe Mode Functions

The GN&CS shall provide Safe Mode functions independent of the C&DHS, that are automatically activated or ground activated and ground deactivated, during all post–separation mission phases to:

a. Reserved

b. Maintain a thermal/power safe attitude

c. Using RWAs as the primary attitude effector, maintain Spacecraft attitude with sufficient accuracy to support the establishment and maintenance of an S–Band links with TDRSS via the HGA when the Spacecraft is Earth–pointing and at the mission altitude

d. Acquire and maintain backup sun–oriented pointing as necessary

The GN&CS shall, as a backup mode, determine and provide to PROPS via C&DHS, the hydrazine thruster command sequencing to maintain a power/thermal safe Earth–based attitude during all phases following launch vehicle separation.

3.7.1.4.9 GN&CS Calibration Support

The GN&CS shall provide telemetry data which will enable ground operators to calibrate the on–orbit alignment of sensors and actuators.

3.7.1.4.10 GN&CS Maneuver Control

The GN&CS shall accept ground commanded maneuver planning inputs to support orbit acquisition, orbit trim and orbit maintenance delta–V maneuvers and shall, on command, autonomously execute these plans.

3.7.1.4.11 GN&CS Software

In all on–orbit modes except Safe Mode, the GN&CS navigation, attitude determination and control, maneuver control, and appendage control algorithms shall be executed by flight software.

3.7.1.5 Communications Subsystem (COMS)

3.7.1.5.1 COMS General Functions

The COMS shall provide all external RF interfaces for Spacecraft data and tracking signals.

3.7.1.5.2 COMS Data Communications Functions

The COMS shall perform the reception and demodulation of all digital data transmitted to the Spacecraft from the ground.

The COMS shall perform the modulation and transmission of all digital data to be transferred from the Spacecraft to the ground.

The COMS shall perform the convolutional encoding (rate 1/2, constraint length 7), prior to modulation and transmission, of digital data to be transferred to the ground via all COMS–provided communications links which require such encoding.

The COMS, when commanded to the proper state, shall transmit all valid data provided by C&DH for transmission to the ground.

The COMS shall provide the interface for command function through the launch vehicle umbilical for prelaunch checkout.

3.7.1.5.3 COMS Navigation and Tracking Support

The COMS shall perform Doppler tracking measurements in support of TONS during scheduled TDRSS navigation tracking contacts, and shall provide the Doppler data to the GN&CS.

The COMS shall perform all Spacecraft functions related to TDRSS–based and GN–based S–Band tracking. This includes receiving and transmitting signals for TDRSS ranging, TDRSS Doppler tracking and GN Doppler tracking.

3.7.1.5.4 COMS Time Transfer Support

The COMS shall supply the C&DHS with signals indicating the receipt time of the PN code epoch on the TDRSS forward link in support of the User Spacecraft Clock Calibration System (USCCS) described in NASA 531–TR–001.

3.7.1.5.5 COMS Link Availability

The COMS shall support communications via the contingency and emergency links in all Spacecraft Modes during all Mission Phases following launch vehicle separation, in accordance with the antenna coverage requirements of Section 3.2.1.7.

The COMS shall allow utilization of the X–band and Ku–band Science data communications links at all times in Science Mode.

The COMS shall be able to accept ground commands immediately upon separation from the launch vehicle.

COMS equipment associated with contingency communications forward (command) links shall at all times and after all single failures be capable of accepting commands. It shall not be possible to command the COMS into a state which compromises this capability.

3.7.1.5.6 HGA Pointing Mechanisms

The COMS shall provide pointing mechanisms to meet HGA tracking requirements for TDRSS.

3.7.1.5.7 COMS HGA Control

The COMS shall point the HGA in response to the latest azimuth and elevation command data received via the C&DH subsystem and shall return azimuth and elevation status via C&DHS.

The COMS shall preclude any damage which may impair HGA operability due to command errors.

3.7.1.5.8 Communications Link Margins

As a goal, the COMS shall be designed to achieve link margins of 3 dB or greater on all required RF communications links except as modified by the antenna coverage requirements of NO TAG.

3.7.1.5.9 Reserved

3.7.1.5.10 COMS I&T Support

COMS interfaces to GSE shall allow testing both with and without the use of radiated RF communications links.

3.7.1.5.11 COMS Bit Error Rate

The COMS, including its associated cabling, shall contribute $\leq 1 \times 10^{-10}$ bit errors/sec to the bit error rate of transported data due to on-board error mechanisms.

3.7.1.5.12 Reserved

3.7.1.5.13 Test Pattern Generation

COMS shall provide a test pattern generation capability for the Ku– and X–band downlinks.

3.7.1.6 Command and Data Handling Subsystem (C&DHS)

3.7.1.6.1 General Functionality

The C&DHS shall provide:

a. Distribution of realtime and stored commands generated on the ground or by the onboard software

b. The periodic collection of Spacecraft Bus telemetry and instrument housekeeping telemetry and the formatting of these data for transmission to the ground and the onboard software

c. Delivery of these formatted data to COMS and to the FSWS

d. The gathering, formatting, multiplexing, and recording of multiple streams of packetized instrument science data

e. The generation and distribution of precise, accurate time and frequency references

f. The onboard communication of digital data between and among the distributed hardware and software components of Spacecraft subsystems and between Spacecraft subsystems and instruments

g. Providing the processing and software resources required for the execution and storage of the programs and data belonging to the onboard subsystems

h. The input and output of data from/to subsystem sensors/effectors and instruments, including appropriate signal conditioning and conversion of signals between the analog and digital domains

i. Accepting the SCC–based Flight Software Subsystem prepared and formatted ancillary data message, then replicating and delivering the ancillary data message to the onboard instruments and transmitting it to the ground for ground system use

The C&DHS shall format all data streams to be transferred from the Spacecraft to the EOSDIS and shall provide these streams to the COMS.

All encoding (with the exception of convolutional encoding, which is performed by the COMS) of baseband data in these streams for the purpose of return link error control shall be performed by the C&DHS.

3.7.1.6.2 C&DHS Command Processing

The C&DHS shall accept, decode and distribute command data transfers from the SCC–based FSWS Spacecraft elements.

The C&DHS shall accept and process all uplink command data transfers demodulated by COMS.

The C&DHS shall perform all functions associated with the validation and error control of the data received from the COMS, including the closure of any end–to–end retransmission protocols used on the forward links from the EOSDIS to the Spacecraft, in accordance with IS20008658.

The C&DHS shall distribute validated commands to the appropriate Spacecraft elements as identified by addressing information in the commands.

The C&DHS shall deliver to the designated destination all command data from the ground within 924 msec of receipt by the C&DHS.

The C&DHS shall deliver to the designated destination all commands from the FSWS within 100 msec of receipt by the C&DHS.

The C&DHS shall receive processor load data via the normal command interfaces and distribute the load data to the destination Spacecraft element.

3.7.1.6.3 C&DHS Telemetry Processing

Telemetry algorithms resident on–board the spacecraft shall be modifiable by ground control.

During the Launch/Ascent Phase, the C&DHS shall provide the real–time health and safety telemetry stream to the Launch Vehicle interface.

The C&DHS shall sample, gather, format, and deliver to FSWS that data which the FSWS requires to control the Spacecraft.

The C&DHS shall sample all Spacecraft point–to–point (i.e., non–bused) telemetry points.

The C&DHS shall gather telemetry from point–to–point interfaces which include serial, active analog, and passive analog data.

The C&DHS shall gather H/K telemetry from Spacecraft telemetry points.

The C&DHS shall gather Health and Safety (H&S) telemetry from designated spacecraft telemetry points.

The C&DHS shall format all spacecraft telemetry in accordance with IS20008568 for delivery to the COMS.

The format of the spacecraft telemetry shall not vary unless commanded to do so by the ground.

The C&DHS shall provide a maximum of 16 kbps normal H/K telemetry for inclusion in the science data stream.

Telemetry provided for the health and safety stream shall not be duplicated for the housekeeping stream.

The C&DHS shall transmit the telemetry data streams, the diagnostic data stream, and the playback data stream to the S–band transponder.

The C&DHS shall provide telemetry to the GSE and LSE as specified in the Ground Support Equipment Requirements Document, 20001430.

3.7.1.6.4 C&DHS Science Data Processing

The C&DHS shall format the science data in accordance with IS20008658.

The C&DHS, on command, shall format, encode as necessary, and forward to the COMS, for transmission via TDRSS KSA or DAS links, real–time science data streams at formatted data rates as needed to transmit the peak Instrument science data rates along with the ancillary and housekeeping telemetry data.

The C&DHS, on command, shall format, encode as necessary, and store for later playback, a science data stream at a formatted data rate sufficient to accommodate the aggregate of the Instrument science data rates along with the ancillary and housekeeping telemetry data.

The C&DHS shall, as a minimum, be capable of the simultaneous generation of science data streams for the DDL, and DB links. Data source mapping to downlink streams shall be performed as required.

The C&DHS shall, on command, playback and route the recorded data to the COMS at a final total bit transmission rate commensurate with the playback of a nominal orbit within a scheduled TDRSS total contact time of 20 minutes. The playback rate shall be within the constraints of the TDRSS SA service utilization and within the Spacecraft-level constraints on maximum link data rate.

For reliability analysis purposes, the minimum C&DHS science data processing capability for success shall be defined as the capability to format and record all science data, and play it back via either the TDRSS Ku-band or the DP links.

3.7.1.6.5 C&DHS Time and Frequency Distribution

The C&DHS shall accept the master frequency reference from the COMS.

The C&DHS shall propagate a master Spacecraft Clock synchronously with the master frequency reference.

The C&DHS shall support ground measurement of the Spacecraft Clock time via the USCCS, in accordance with NASA 531–TR–001. This includes providing telemetry data indicating the transmission time of telemetry stream synchronization patterns, and the receipt time of COMS-generated epoch signals.

The C&DHS shall accept and execute commands to set and adjust the Spacecraft Clock time.

Time information shall be presented in a format compatible with the CCSDS Day Segmented Time Code format defined in CCSDS 301.1–B–1.

C&DHS–provided time references and time tags shall have a resolution of 1 microsecond or finer. These times shall be accurate within 100 microseconds relative to Universal Time, Coordinated.

3.7.1.6.6 C&DHS On-Board Data Communications

The C&DHS shall be capable of providing data transport services in support of the following data transfers:

a. Within Spacecraft subsystems between on–board subsystem hardware components which are not directly interconnected

b. Within Spacecraft subsystems between hardware and software subsystem components

c. Within Spacecraft subsystems between software subsystem components

d. Between Spacecraft subsystems

e. Between Spacecraft subsystems and Instruments

The C&DHS shall perform appropriate signal conditioning and signal conversion between the analog and digital domains in support of the input and output of data to and from subsystems and Instruments.

The C&DHS shall collect telemetry and subsystem data synchronously with the Spacecraft Clock such that sample timing is controlled within 1 msec and stable within 100 microseconds.

3.7.1.6.7 C&DHS Software Execution Support

The C&DHS shall provide all computing devices required to provide memory storage and program execution services to SCC–based FSWS software.

The C&DHS shall, as a minimum, provide the following computing resources to FSWS software:

a. 1.5 MIPS DAIS throughput

b. 1 M wordprocessor memory for programs and data

The C&DHS shall provide command services in support of modifications to loaded FSWS software.

The C&DHS shall provide telemetry services which allow ground controllers to inspect FSWS.

The C&DHS shall provide interfaces whereby SCC–based FSWS software may access the various C&DHS data communications services.

3.7.1.6.8 C&DHS Ancillary Data Support

The C&DHS shall accept formatted ancillary data messages from the FSWS.

The C&DHS shall accept commands to enable and disable dissemination of the ancillary data message.

3.7.1.6.9 C&DHS Service Availability

The C&DHS shall at all times and after all single failures be capable of accepting from the COMS and executing those commands needed to reconfigure on–board subsystems to restore normal operations. Command errors shall be incapable of compromising this capability.

3.7.1.6.10 Reserved

3.7.1.6.11 C&DHS Safe Mode Support

The C&DHS shall, when possible, distribute notification of Safe Mode entry to subsystem equipment requiring such notification.

The C&DHS shall initiate Safe Mode entry immediately upon command from the ground.

The C&DHS shall continue to process and distribute commands and collect and format telemetry during Safe Mode.

The C&DHS shall distribute a message initiated by the FSWS indicating that the C&DHS processors and FSWS are functioning normally. These messages shall be distributed to subsystem equipment which requires it, and to the Instruments. Distribution of this "I'm OK" message shall cease when the FSWS indications cease.

3.7.1.6.12 Reserved

3.7.1.6.13 C&DHS Modularity

The C&DHS architecture shall incorporate functional modularity where practical such that performance and functionality growth may be realized via the incorporation of hardware and technology upgrades to individual modules.

3.7.1.6.14 Reserved

3.7.1.6.15 Reserved

3.7.1.6.16 Reserved

3.7.1.6.17 Reserved

3.7.1.7 Structure and Mechanisms Subsystem (SMS)

3.7.1.7.1 Structure

3.7.1.7.1.1 General Functions

The SMS shall provide the basic structural framework, mounting support, routing paths (for EAS harness), attach points, and interface ports for all Instruments and assemblies.

3.7.1.7.1.1.1 Factors of Safety

All structures shall be designed using appropriate Factors of Safety (FS) defined in the mechanical section of the General Interface Specification (GIS).

3.7.1.7.1.1.2 Allowable Mechanical Properties Documentation

Values for allowable mechanical properties of structural materials in their design environment (e.g., subjected to single or combined stresses) shall be taken from MIL–HDBK–5, MIL–HDBK–17, or other sources approved by NASA.

3.7.1.7.1.1.3 Allowable Mechanical Properties – Values

When using MIL–HDBK–5, material "A" allowable values shall be used where failure of a single metallic load path would result in loss of structural integrity.

3.7.1.7.1.1.4 Allowable Mechanical Properties – Analysis/Test

Where values are not available for mechanical properties of new materials or joints, or for existing materials or joints in new environments, they shall be determined by analytical or test methods approved by NASA.

3.7.1.7.1.2 Instrument Mounting Interfaces

The SMS shall be designed to support the allocated Instrument masses as per the UIIDs.

The SMS shall be designed to permit shimming of plate–mounted instruments at the mounting interface.

The SMS shall allow the mounting of Instruments directly to the Spacecraft Core Assembly or to Instrument–specific secondary support structure, as per the GIIS and UIIDs.

3.7.1.7.1.3 SMS Standard Interfaces

The SMS shall employ standard fasteners for structural and mechanical attachments where practical.

3.7.1.7.1.4 Launch Vehicle Interface Equipment

The SMS shall provide mounting structures and support to interface with the launch vehicle adapter and to withstand the launch environment.

3.7.1.7.1.5 Structural Failure

3.7.1.7.1.5.1 Reserved

3.7.1.7.1.5.2 Capacity to withstand failures

The structure shall withstand any credible failure of any single structural member while retaining sufficient strength and stiffness to preclude catastrophic Spacecraft failure or jeopardy to mission success.

3.7.1.7.1.5.3 Credibility of failure

The credibility of failures of structural members which are critical to Spacecraft integrity or mission success shall be precluded via load testing and analysis.

3.7.1.7.1.5.4 Strength

The SMS structure design shall preclude creep strain leading to rupture, detrimental deformation, or creep buckling of compression members during their design life.

3.7.1.7.1.5.5 Safe–Life Analysis

Any required "safe–life" or "fail–safe" analyses of structural elements shall be performed in accordance with GSFC–731–0005–83.

3.7.1.7.1.5.6 Thermal Cycling

All primary load–carrying structures shall be capable of enduring four times the number of thermal cycles expected in service.

3.7.1.7.1.5.7 Margins of Safety

All structures shall have positive Margins of Safety (MS) under all predicted load conditions.

3.7.1.7.1.5.8 Creep Strain Avoidance

The SMS design shall ensure that heat load changes due to any of the following Spacecraft changes do not induce a creep strain at any interface which could compromise Spacecraft structural performance:

a. Changing Spacecraft operating modes and configurations within normal operating bounds

b. Changing Instrument operating modes and configurations within normal operating bounds

c. Changing component power profiles within normal operating bounds

3.7.1.7.1.6 Alignment

The SMS configuration shall provide fields of view to Instrument and Spacecraft alignment reference aids.

3.7.1.7.1.7 Pointing and Stability

The SMS shall comply with the allocated pointing and stability requirements under all conditions wherein SMS components are maintained within specified temperature ranges.

3.7.1.7.2 Mechanisms

3.7.1.7.2.1 Solar Array Drive

The SMS shall provide a Solar Array Drive (SAD) mechanism which operates in response to motor drive signals received from the EPS.

3.7.1.7.2.1.1 Rotation Direction Capability

The SAD shall be capable of rotating the solar array about the axis of its boom.

3.7.1.7.2.1.2 Rotation Rates

The SAD shall accommodate rotation of the solar array at all rates consistent with the rate selectability requirements of the EPS.

3.7.1.7.2.1.3 Halt Capability

The SMS shall halt rotation and slewing of the solar array and hold the array at any angular position upon receiving appropriate motor drive signals from EPS.

3.7.1.7.2.2 HGA Boom and Deployment Mechanisms

The SMS shall provide the HGA boom and the mechanisms for deploying the HGA.

3.7.1.7.2.3 Equipment Module Interface Mechanisms

The SMS shall provide mechanisms where needed at EM interfaces to limit relative thermal distortion and transfer of loads from the Spacecraft.

3.7.1.8 Propulsion Subsystem (PROPS)

3.7.1.8.1 PROPS General Functions

The PROPS shall provide all propulsive thrust required by the Spacecraft to support attitude and orbit control during all mission phases following the launch/ascent phase.

The PROPS shall provide impulses for orbit circularization after injection, and for orbit maintenance at operational altitude, including atmospheric drag make–up and inclination correction.

The PROPS shall provide impulsive torques for on–orbit three–axis attitude control, three–axis attitude slews, Earth acquisitions, and reaction wheel momentum unloading.

The PROPS shall perform all functions related to the storage and management of on–board propellants, including tankage, valve actuation, pressure sensing, flow sensing, leak detection and leak isolation.

3.7.1.8.2 PROPS Propellant

The PROPS shall use hydrazine as a monopropellant for all thrusters.

The PROPS shall carry at launch a propellant quantity equal to 110% of that needed to accomplish maintenance of the operational orbit for a period of 7.5 years.

The PROPS shall provide means whereby the remaining quantity of propellant on board may be determined to within 3% of the amount of propellant carried at launch.

3.7.1.8.3 PROPS Command and Control

PROPS operations shall be controlled in accordance with commands received from the GN&CS or from ground controllers via the C&DHS.

The PROPS shall accept and execute commands for the firing of thrusters. These commands will be generated by the GN&CS or uplinked from the ground.

PROPS thruster firings shall be commandable such that either the primary or redundant set of thrusters may be selected for firing. The pulse duration for each selected thruster shall be individually commandable over the range of 16 to 1024 msec, with a granularity of 8 msec or finer.

PROPS thruster firings shall be controlled with a duration accuracy of 0.5 msec, and a duration repeatability of 0.25 msec.

The PROPS shall accept and execute commands for selecting and deselecting each individual thruster engine. When a thruster is deselected, commands to fire that thruster from any source shall be ignored by the PROPS.

3.7.1.8.4 PROPS Design and Construction

The PROPS shall be implemented as a stand–alone unit, separable from the Spacecraft, in order to facilitate ground testing and maintenance.

3.7.1.8.5 Reserved

3.7.1.8.6 PROPS Operating Temperatures

The PROPS shall be capable of performance as specified when all components are at least 10 deg C above the propellant freezing points.

3.7.1.9 Electrical Accommodations Subsystem (EAS)

3.7.1.9.1 Intra–Subsystem Connections

The EAS shall provide all subsystem–to–subsystem electrical interconnections between separately–packaged components within Equipment Modules and panels.

3.7.1.9.2 Equipment Module Connections

The EAS shall provide all electrical interconnections between Spacecraft Equipment Modules and panels.

3.7.1.9.3 Launch Vehicle Connections

The EAS shall provide all electrical interconnections between the Spacecraft Bus and launch vehicle interface.

3.7.1.9.4 Miscellaneous Equipment Connections

The EAS shall provide all electrical interconnections to and from all Spacecraft Bus equipment not mounted in equipment modules.

3.7.1.9.5 Instrument Connections

The EAS shall provide all electrical interconnections between the Spacecraft Bus and the Instruments.

3.7.1.9.6 Pyrotechnic Arming and Firing

The EAS shall provide arming and firing circuits for the pyrotechnic mechanisms used on the Spacecraft.

3.7.1.9.7 Connections – Signal Types

The EAS shall provide electrical interfaces for the following signal types:

a. +120 V DC primary power distribution

b. +28 V DC secondary power distribution

c. MIL–STD–1553B data busses

d. Time and frequency distribution busses

e. High–rate Instrument data links

f. Discrete logic–level and relay drive command signals

g. Discrete active analog, passive analog, and passive bi–level telemetry signals

h. Pyrotechnic device firing

i. Ground returns/references

3.7.1.9.8 Reserved

3.7.1.9.9 Reference, Returns, and Bonding

The EAS shall route all subsystem power returns to the primary power reference for the Spacecraft.

The EAS shall provide harness interconnections and bonding, as appropriate, to primary and secondary reference points and planes.

Power and signal returns shall be accommodated by the EAS harness.

3.7.1.9.10 Primary Power Voltage Drop

The EAS shall limit the voltage of the primary power distribution harness to 2% of the primary power voltage.

3.7.1.10 Flight Software System (FSWS)

3.7.1.10.1 FSWS General Functions

The Flight Software System (FSWS) shall supply all Spacecraft Bus flight software, and firmware for selected C&DHS components which contain embedded processors.

3.7.1.10.2 FSWS System Support Functions

The FSWS shall initiate spacecraft load shedding upon sensing that the orbit average spacecraft power load exceeds the spacecraft power generation capability.

3.7.1.10.3 FSWS Subsystem Support Functions

The FSWS shall execute software control, monitoring, FDIR, and other algorithms required by other subsystems as allocated by the subsystem specifications.

3.7.1.10.4 Reserved

3.7.1.10.5 FSWS Telemetry Monitoring

The FSWS shall provide a Telemetry Monitor service to subsystems, in support of autonomous FDIR actions due to time–critical anomalies or failures.

Upon detection of an active trigger condition, the Telemetry Monitor shall issue a predefined command or shall trigger execution of a predefined RTCS.

3.7.1.10.5.1 Reserved

3.7.1.10.6 FSWS Ancillary Data Support

The Flight Software System shall accept ancillary data generated by subsystems.

The FSWS shall provide the C&DHS with formatted ancillary data for distribution to the Instruments.

The FSWS shall provide ancillary data messages to the C&DHS. The duration of FSWS processing of any data will never exceed .924 seconds.

3.7.1.10.7 FSWS Command and Memory Load Processing Rates

The FSWS shall accept and process uplinked command data and computer memory load data at rates commensurate with the capacities of the ground–to–Spacecraft communications links.

3.7.1.10.8 FSWS FDIR

Software FDIR shall monitor the Spacecraft central computer and related processing equipment operation. Upon detection of failure of the system to provide necessary resources, it shall withhold distribution of the computer "OK" message, causing autonomous transition to Safe Mode.

The FSWS shall monitor its own execution. Upon detection of anomalous operation, shall withhold distribution of the computer "OK" message, causing autonomous transition to Safe Mode.

3.7.1.10.9 Reserved

3.7.1.10.10 Reserved

3.7.1.10.11 FSWS Software Operating Environment

The FSWS shall provide a standardized software operating environment for the execution of subsystem application software.

3.7.1.10.12 Reserved

3.7.1.10.13 Reserved

3.7.2 Major Assembly Requirements

3.7.2.1 General

3.7.2.1.1 General Design

Major Assemblies shall be able to be independently assembled and tested.

Major Assemblies shall be designed such that they can be independently attached to or detached from the Spacecraft Core.

Major Assemblies shall be removable from the Spacecraft Core prior to launch without disassembly of TCS hardware.

Equipment Modules shall have a panel that can be removed to provide access to equipment contained within the module at the EM and spacecraft levels of assembly. Removal of this panel shall be possible without requiring the removal of any other spacecraft equipment.

Fuses for a Major Assembly shall be located, to the extent practical, such that it is possible to replace or view any fuse without requiring any disassembly of the Major Assembly.

Major Assemblies layouts shall, to the extent practical, ensure that any component contained the Major Assembly can be removed without having to remove any other component.

Major Assembly design shall define the GSE required for cooling the Assembly during I&T as well as during processing at the launch site. The Assembly shall incorporate the thermal GSE interfaces which are necessary to ensure adequate ground cooling. The interfaces shall be accessible to the thermal GSE at the Spacecraft level of assembly.

Major Assembly design shall ensure that access to the interface connector is sufficient to preclude the need for blind–mate connectors during installation of the major assembly on the Spacecraft Core.

Major Assemblies shall provide lift points capable of supporting the Major Assembly and any accompanying GSE under handling loads of 2g vertical (per MIL–STD–1367A).

When four or more lift points are provided, any combination of three shall be capable of lifting the entire load.

3.7.2.1.2 Major Assembly Locations

The Major Assemblies shall be capable of meeting all performance requirements when operating in the locations shown in Figure 10.

3.7.2.1.3 Mass Allocations

Each Major Assembly shall not exceed its mass allocation as indicated in Table XVII.

3.7.2.1.4 Orbit–Averaged Power Allocations

Each Major Assembly shall not exceed its one–orbit–averaged power allocation for science mode as indicated in Table XVIII.

3.7.2.2 Spacecraft Core

The Spacecraft Core shall provide the necessary structural support and mounting structures for the major assemblies and shall structurally support all flight the major assemblies.

3.7.2.3 Propulsion Module

The Propulsion Module shall provide the capability to monitor tank pressure and temperature via GSE in the absence of spacecraft power during all pre–launch operations.

The Propulsion Module shall be capable of being defueled in the vertical orientation.

Any defueling valves in the Propulsion module shall be accessible by a man in a SCAPE suit after the spacecraft has been encapsulated in the payload fairing.

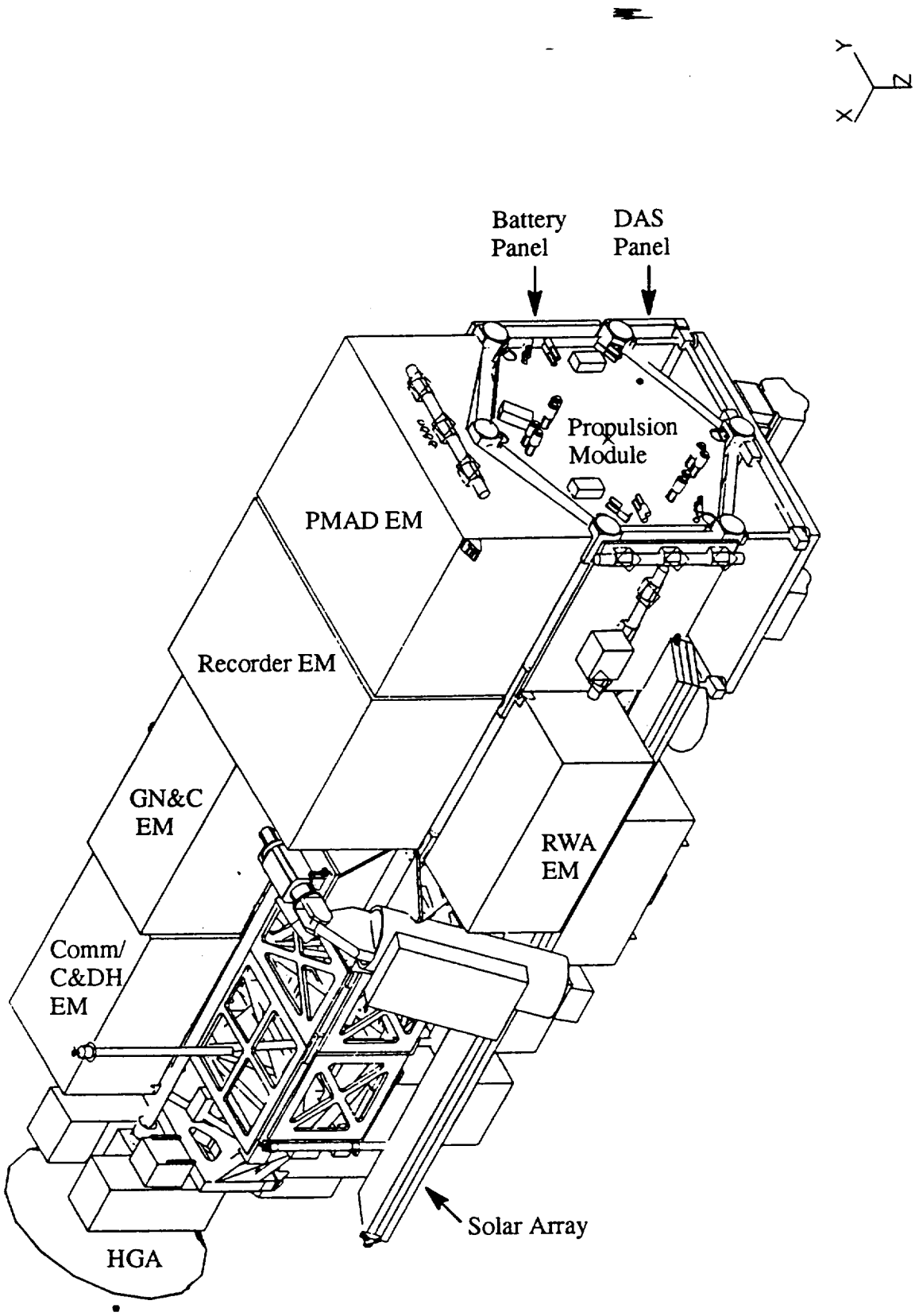

Figure 10. EOS AM Spacecraft – Major Assemblies

Table XVII. Major Assembly Mass Allocations

Major Assembly	Allocation (lb)
Propulsion Module	367
Solar Array	793
HGA	312
Power Module	730
Battery Panel	355
GN&C Sensor Module	320
RWA Module	280
Communications/C&DH Module	302
Recorder Module	927
DAS Panel	72
Total Allocated to Major Assemblies	**4458**
Spacecraft Core	2,967
Unallocated Reserve	0
Total Spacecraft Bus	**7425**

The Propulsion Module shall house the propulsion equipment needed for delta–V maneuvers, orbit maintenance, and back–up attitude control, including propellant and pressurant tankage and plumbing, thrusters, and associated power, thermal, and C&DHS control and interface equipment and harnesses.

3.7.2.4 Solar Array

To permit continuity testing with the Power Module test points, the solar array shall for each circuit provide test points which are external to the spacecraft when the array is installed and in a stowed configuration.

Table XVIII. Major Assembly Power Allocations (One-Orbit-Averaged/EOL)

Major Assembly	Allocation (watts)
Propulsion Module	80
Solar Array	45
HGA	135
Power Module	183
Battery Panel	10
GN&C Sensor Module	152
RWA Module	75
Communications/C&DH Module	145
Recorder Module	305
DAS Panel	75
Total Allocated to Major Assemblies	**1205**
Spacecraft Core	65
Unallocated Reserve	65
Total Housekeeping Bus	**1,335**

The Solar Array Assembly shall contain the Gallium-Arsenide Solar Array blanket and boom, associated stowage equipment and deployment mechanisms, array drive motor, power shunt electronics, and redundant Coarse Sun Sensors (for Safe Mode Solar Array pointing).

3.7.2.5 HGA

The HGA layout shall attach the reflector and subreflector such that they may be removed and re–installed on the spacecraft at any time before encapsulation in the launch vehicle payload fairing.

The HGA Assembly shall comprise the high-gain antenna used for TDRSS communications, associated deployment and pointing mechanisms, the Ku–band RF transmission equipment, and the associated harnessing and waveguide.

3.7.2.6 Power Module

The Power Module shall house one of the batteries and associated charge/discharge control electronics, equipment which regulates and switches power to the various Spacecraft loads, and associated thermal control and C&DH interface equipment.

The Power Module shall bring out test points external to the spacecraft on the module to permit EMC measurements on the power bus at the spacecraft level.

The Power Module shall provide test points external to the spacecraft on the module to verify the integrity of redundant fuses at the spacecraft level.

The Power Module shall provide test points external to the spacecraft on the module to verify the integrity of all double insulation, including power distribution and battery cells, at the spacecraft level.

The Power Module shall provide test points external to the spacecraft on the module for the Signal Reference Plane and the Prime Power Reference at the spacecraft level.

The Power Module shall provide battery temperature, battery pressure, and battery voltage monitors for GSE to permit monitoring in the absence of spacecraft power.

The Power Module shall provide power bus voltage, power bus current(s) and mode control monitors to permit monitoring by GSE.

Battery Panels shall provide the necessary test points to discharge the batteries. This test point interface shall be accessible at the spacecraft level and designed to ensure personnel cannot be exposed directly to battery power.

3.7.2.7 GN&C Sensor Module

The GN&C Sensor Module shall house sensor equipment used by the GN&CS for attitude determination, the interface electronics for the various attitude sensors and effectors, the equipment for Safe Mode control, and associated power, thermal, and C&DHS control and interface equipment.

The GN&C Sensor Module shall provide accessible test points on the module for monitoring ESA electronics and TAM signals via GSE.

The GN&C Sensor Module shall provide accessible test points on the module for injecting electrical stimulus signals via GSE to the ESA electronics and the IRU.

3.7.2.8 RWA Module

The RWA Module shall house the RWA, oriented as required by GN&CS, along with associated power and thermal control and interface equipment.

3.7.2.9 Communications/C&DH Module

The Communications/C&DH Module shall house the S–band RF equipment for command reception and telemetry transmission and the C&DHS equipment for command processing and distribution. The module shall also house telemetry collection and formatting equipment, the primary flight computers, and the control electronics for the Solar Array drive motor, along with power, thermal, and C&DHS control and interface equipment.

The COMM/C&DH Module shall provide via the interface connector a hardline (i.e., non RF) command, telemetry and memory dump capability.

3.7.2.10 Recorder Module

The Recorder Module shall house the recorders for Science data and housekeeping telemetry data storage, as well as the C&DHS equipment which formats and switches the various streams of science data for recording and transmission, and the COMS equipment which modulates the Ku-band transmit stream. The module shall also house the associated power, thermal, and C&DHS control and interface equipment.

The Recorder Module shall provide test points via the interface connector for modulated IF outputs from the KSA and DAS modulators.

3.7.2.11 Direct Access Service (DAS) Panel

The DAS Panel shall house the X–band modulation and transmission equipment for the DAS, along with the associated thermal control and C&DHS interface equipment.

3.7.2.12 Battery Panel

The Battery Panel shall house one of the Spacecraft's batteries along with the associated thermal control and C&DHS interface equipment.

(This page intentionally left blank.)

4 QUALITY ASSURANCE PROVISIONS

The Performance Assurance Implementation Plan (PAIP), PN2005397, documents the overall quality assurance approach for the EOS AM Spacecraft Bus. The specifics of the Performance Verification process are documented in the Verification Plan, PN20005404. The Verification Plan includes the verification matrix describing the methods and approaches to be used to verify the compliance of the Spacecraft Bus with each requirement of this CEI Specification.

The Spacecraft Bus quality assurance program, as documented in the PAIP and the Verification Plan, shall comply with all applicable quality assurance requirements of NASA 421–10–01 (the RD), NASA 420–05–02 (the PAR), the Instrument UIIDs, and the GIIS.

(This page intentionally left blank.)

5 NOTES

5.1 Acronym List

AFB	Air Force Base
AIRS	Atmospheric Infrared Sounder
ALT	Altimeter
AM	Ante Meridien (Before Noon)
AMSU	Advanced Microwave Sounding Unit
ASTER	Advanced Spaceborne Thermal Emission and Reflection Radiometer
az/el	Azimuth/Elevation
BER	Bit Error Rate
BOL	Beginning of Life
bps	Bits per second
BDU	Bus Data Unit
C&DHS	Command and Data Handling Subsystem
CCSDS	Consultative Committee on Space Data Systems
CDR	Critical Design Review
CEI	Contract End Item
CERES	Clouds and Earth's Radiant Energy System
CH_4	Methane
CPHTS	Capillary Pumped Heat Transport System
CSP	Common Signal Processor
CMD	Command
COMS	Communications Subsystem
CSCI	Computer Software Configuration Item
CTIU	Command and Telemetry Interface Unit
DAS	Direct Access System
DDL	Direct Downlink
deg	Degree
dB	Decibel
dBW	Decibels relative to 1 watt
DB	Direct Broadcast
DAIS	Defense Avionics Instruction Set
DOD	Depth of Discharge
DP	Direct Playback
e.g.	for example
EAS	Electrical Accommodation Subsystem
EDAC	Error Detection and Control
EIRP	Effective Isotropically–Radiated Power
ELV	Expendable Launch Vehicle
EM	Equipment Module
EMC	Electro–Magnetic Compatibility
EMI	Electro–Magnetic Interference

EOL	End–of–Life
EOS	Earth Observing System
EOS AM	Earth Observing System (AM Mission)
EOSDIS	EOS Data Information System
EOSP	Earth Observing Scanning Polarimeter
EPS	Electrical Power Subsystem
ESMC	Eastern Space and Missile Center
FDIR	Fault Detection, Isolation and Recovery
FEC	Forward Error Correction
FOV	Field of View
FRR	Flight Readiness Review
FS	Factor of Safety
FSWS	Flight Software System
GaAs	Gallium Arsenide
GE	General Electric
GFE	Government Furnished Equipment
GGI	GPS Geoscience Instrument
GHz	Giga–Hertz
GIIS	General Instrument Interface Specification
GIS	General Interface Specification
GN	Ground Network
GN&CS	Guidance, Navigation, and Control Subsystem
GPS	Global Positioning System
GSE	Ground Support Equipment
GSFC	Goddard Space Flight Center
HDBK	Handbook
HGA	High Gain Antenna
HIRDLS	High–Resolution Dynamics Limb Sounder
HIRIS	High–Resolution Imaging Spectrometer
ICD	Interface Control Document
i.e.	that is (id est)
I/O	Input/Output
I&T	Integration and Test
kbps	kilo bits per second
km	kilometer
KSA	K–band Single Access
kW	Kilowatt
lb	Pound (mass)
LHC	Left–hand Circular
LIS	Lightning Imaging Sensor
LV	Launch Vehicle
Mbps	Megabits per second
MHS	Microwave Humidity Sounder
MIL	Military

MIMR	Multifrequency Imaging Microwave Radiometer
min	minute
MIPS	Million Instructions Per Second
MISR	Multi–Angle Imaging Spectro–Radiometer
MLI	Multi–layer Insulation
MLS	Microwave Limb Sounder
MODIS	Moderate–Resolution Imaging Spectroradiometer
MOPITT	Measurement of Pollution in the Troposphere
MPS	Master Power Supply
MS	Margin of Safety
MST	Mobile Service Tower
msec	milli–second
Mword	Megaword
N/A	Not Applicable
NASA	National Aeronautics and Space Administration
NBR	Navigation Base Reference
NiH_2	Nickel–Hydrogen
nmi	Nautical Mile
NUS	No Upper Stage
PAIP	Performance Assurance Implementation Plan
PAR	Performance Assurance Requirements
PDR	Preliminary Design Review
PN	Pseudorandom Noise
PPR	Primary Power Reference
PROPS	Propulsion Subsystem
QPSK	Quaternary-Phase-Shift-Keying
RCV	Receive
RD	Requirements Document
revs	revolutions
RF	Radio Frequency
RHC	Right–Hand Circular
RTCS	Relative Time Command Sequence
RWA	Reaction Wheel Assembly
S/A	Solar Array
S/C	Spacecraft
SA	Single Access
SAD	Solar Array Drive
SAFIRE	Spectroscopy of the Atmosphere Using Far Infrared Emission
SAGE III	Stratospheric Aerosol and Gas Experiment III
SLOC	Source Lines of Code
SMA	S-band Multiple Access
SMS	Structures and Mechanisms Subsystem
SN	Space Network
SRP	Signal Reference Plane

SSA	S–Band Single Access
SSR	Solid State Recorder
SSU	Sequential Shunt Unit
STD	Standard
STIKSCAT	Stick Scatterometer
STS	Space Transportation System
SWIR	Shortwave Infrared Radiometer
SWIRLS	Stratospheric Wind Infrared Limb Sounder
TBD	To Be Determined
TBR	To Be Reviewed
TCS	Thermal Control Subsystem
TDRS	Tracking and Data Relay Satellite
TDRSS	Tracking and Data Relay Satellite System
TES	Tropospheric Emission Spectrometer
TIV	Titan IV
TIR	Thermal Infrared Radiometer
TLM	Telemetry
TMON	Telemetry Monitor
TONS	TDRSS On–Board Navigation System
TR	Tape Record
UIID	Unique Instrument Interface Document
US	United States
USCCS	User Spacecraft Clock Calibration System
USGCRP	US Global Change Research Program
UTC	Universal Time Code
VAFB	Vandenberg Air Force Base
VCHP	Variable Conductance Heat Pipe
V DC	Volts dc
VEL	VNIR Electronics
VSR	VNIR Scanning Radiometer
VNIR	Visible and Near Infrared Radiometer
WSMC	Western Space and Missile Center
WTS	Wallops Tracking Station
XMT	Transmit
ZOE	Zone of Exclusion

IS20008503
CAGE No. 49671
30 April 1993

(Preliminary)
EOS–AM Spacecraft to Launch Vehicle Interface Requirements Document (ICD–103)

Prepared under:
Contract NAS5–32500
NASA Goddard Space Flight Center
Greenbelt, Maryland 20771

Prepared by:
Martin Marietta Corporation
Astro–Space Division
P.O. Box 800
Princeton, New Jersey 08543–0800

(This page intentionally left blank.)

IS20008503
30 April 1993

EOS–AM Spacecraft to Launch Vehicle Interface Requirements Document (ICD–103)

Prepared under:
Contract NAS5–32500
NASA Goddard Space Flight Center
Greenbelt, Maryland 20771

Prepared by: _____
B. Erika Kohl
Systems Engineering and Integration

Approved by: _____
Scott Carey, Manager
Systems Engineering and Integration

Approved by: _____
Phil Guistino, Manager
EOS Program

Approved by: _____
EOS Project GSFC

Prepared by:
Martin Marietta Corporation
Astro–Space Division
P.O. Box 800
Princeton, New Jersey 08543–0800

(This page intentionally left blank.)

REVISION LOG

This log identifies those portions of this document which have been revised since the original issue. Revised portions of each page, for the current revision only, are identified by marginal striping.

Revision	Paragraph Number(s) Affected	Rev. Date	Approval
A	3.1.1.1, 3.1.5.2, 3.2.1.2, 3.2.2.1.1&2, 3.2.3.1.2, 3.2.3.4.2, 3.2.3.5.3.1–4, 3.2.3.5.4, 3.3.2.2, 3.4.2.1,6 3.5.1.5.1.3, 3.5.5–3.5.8.1, 3.5.9.1.6, 4., Tbls II, IV, IX Fig.s 6 & 7	31 Aug 92	
B		02 Nov 92	
C	1.3.1, 3.1.3.1, Tbls I, II, VIII, 3.4.1.1, 3.5.1.1.2, Tbl X, Tbl XI, 3.5.3.4, 3.5.7, 3.5.8, 3.5.8.1–3, 3.5.8.2	30 Apr 93	

(This page intentionally left blank.)

TABLE OF CONTENTS

SECTION / PARAGRAPH	TITLE	PAGE
1	SCOPE	1
1.1	Purpose	1
1.2	Effectivity	1
1.3	Definitions	1
1.3.1	Encapsulation	1
1.3.2	Flight Vehicle System (FVS)	1
1.3.2.1	Flight Support Equipment	1
1.3.2.2	Flight Vehicle (FV)	2
1.3.2.3	Launch Vehicle System (LVS)	2
1.3.2.4	Launch Vehicle Ground Elements	2
1.3.2.5	Spacecraft System (SCS)	2
1.3.2.6	Spacecraft (SC)	2
1.3.2.7	Spacecraft Adapter (SCA)	2
1.3.2.8	Spacecraft Ground System	2
1.3.2.9	Spacecraft Separation System	2
1.3.3	Launch Vehicle Integration Contractor (LVIC)	2
1.3.4	Spacecraft Contractor	2
2	DOCUMENTS	3
2.1	Applicable Documents	3
2.1.1	Specification	3
2.1.2	Standards	3
2.1.3	Other Documents	3
3	INTERFACE DEFINITION	5
3.1	Physical Interfaces	5
3.1.1	Envelopes	5
3.1.1.1	Payload Fairing Envelopes	5
3.1.1.2	Hardware Clearances	5
3.1.1.3	Payload Fairing Configuration	5

TABLE OF CONTENTS (Continued)

SECTION / PARAGRAPH	TITLE	PAGE
3.1.2	Mechanical	5
3.1.2.1	Attachment	5
3.1.2.2	Flight Support Equipment	11
3.1.2.3	Flight Termination System	11
3.1.2.4	Coplanarity	13
3.1.2.5	Flatness	13
3.1.2.6	Alignment	13
3.1.2.7	Adapter Assembly	13
3.1.2.8	Access Provisions	13
3.1.3	Electrical Interface	13
3.1.3.1	SC to LV Interface	13
3.1.3.2	Connector Interface Wiring	14
3.2	Functional Interface	14
3.2.1	Structure and Loads	14
3.2.1.1	Stiffness	16
3.2.1.2	Factors of Safety	16
3.2.1.3	Strength	16
3.2.1.4	Interface Loads	16
3.2.2	Mass Properties	16
3.2.2.1	Spacecraft Mass Properties	16
3.2.3	Avionics	16
3.2.3.1	Electrical Interface	16
3.2.3.2	Electrical Power	20
3.2.3.3	Electromagnetic Compatibility (EMC)	20
3.2.3.4	Separation	23
3.2.3.5	Telemetry and Commands	23
3.3	Environmental Interfaces	28
3.3.1	Thermal	28
3.3.1.1	Payload Fairing (PLF) Environment	28
3.3.1.2	Free Molecular Heating	30

TABLE OF CONTENTS (Continued)

SECTION/ PARAGRAPH	TITLE	PAGE
3.3.2	Contamination Control	30
3.3.2.1	Contamination Control Surfaces	30
3.3.2.2	Cleanliness of Airspace within PLF	30
3.3.2.3	PLF Cleanliness	33
3.3.2.4	Material Selection	33
3.3.3	Acoustic and Random Vibration	33
3.3.4	Shock	33
3.3.5	Pressure	35
3.3.5.1	PLF Pressure Decay	35
3.3.5.2	Rate of Pressure Change	35
3.4	Mission and Performance Interface	35
3.4.1	Mission Interfaces	35
3.4.1.1	Launch Window	35
3.4.1.2	Mission Targeting	35
3.4.2	Performance	36
3.4.2.1	LV Performance	36
3.4.2.2	Separation Attitude Maneuver	36
3.4.3	Separation	36
3.4.3.1	Separation Initiation	36
3.4.3.2	Separation Attitude Error	36
3.4.3.3	SC Separation Inertial Rate	36
3.4.3.4	Collision Avoidance	37
3.4.3.5	Separation Velocity	37
3.4.3.6	Separation Maneuvers	37
3.4.3.7	Separation Clearance	37
3.5	Ground System Interfaces	37
3.5.1	LV MST/UT Requirements	37
3.5.1.1	Facility Requirements	37
3.5.1.2	Electrical	38
3.5.1.3	Liquids	39

TABLE OF CONTENTS (Continued)

SECTION / PARAGRAPH	TITLE	PAGE
3.5.1.4	Pneumatics	39
3.5.1.5	Environment	40
3.5.1.6	Communications	41
3.5.2	Launch Operations Building (LOB) Requirements	41
3.5.2.1	Facilities	41
3.5.2.2	Deluge System	41
3.5.2.3	Environmental System Monitoring and Control	42
3.5.2.4	Communications	42
3.5.3	Launch And Service Building (LSB) Requirements	42
3.5.3.1	Facilities	42
3.5.3.2	Electrical	42
3.5.3.3	Liquids/Gases	43
3.5.3.4	Communication	43
3.5.4	Building 8510 (or Equivalent) Launch Control Center (LCC) Requirements	44
3.5.4.1	Facilities	44
3.5.4.2	Deluge System	44
3.5.4.3	Environmental System Monitoring and Control	44
3.5.4.4	Communications	44
3.5.5	Building 7000 (or equivalent) Requirements	44
3.5.6	Vandenberg Telemetry Receiver Site Requirements	44
3.5.7	Vandenberg Communications Center Requirements	45
3.5.8	Transportation Requirements	45
3.5.8.1	Transporter General Requirements	45
3.5.8.2	Transporter Environmental Control System (ECS)	46
4	ABBREVIATIONS AND ACRONYMS	47

LIST OF FIGURES

FIGURE	TITLE	PAGE
1	EOS–AM Spacecraft – Nadir View	6
2	EOS–AM Spacecraft – Zenith View	7
3	EOS AM Static Envelope	8
4	Aft End of EOS AM Spacecraft	9
5	EOS AM Node Fitting	10
6	Separation System Concept	12
7	LSE Functional Interfaces	18
8	Post–Mate Support Equipment Configuration	19
9	LV Radiated Emissions (14 kHz–18 GHz)	21
10	LV Conducted Emissions	22
11	LV Magnetic Radiated Field	24
12	Spacecraft Radiated Emissions Limits	25
13	SC Magnetic Emissions Limits	26
14	SC to LV Digital Interface Circuit	27
15	Clock and Data Alignment	28
16	Differential Signal Conventions	29
17	Contamination Sensitive Surfaces	31
18	Contamination Sensitive Surfaces	32
19	Shock Spectrum	34

LIST OF TABLES

TABLE	TITLE	PAGE
I	Potential PLF Access Requirements	14
II	General pin Functions	15
III	Net CG Load Factors	15
IV	SC Mass Properties Summary (SC Coordinates)	17
V	SC Hardline Telemetry (Preliminary)	27
VI	SC Contamination Limits (Pre–launch to Separation)	30
VII	Maximum PLF Acoustic Levels	33
VIII	Mission Interfaces	35
IX	SC Earth–oriented Separation Attitude	36
X	MST Clean Enclosure Electrical Power Receptacles	38
XI	LSB Electrical Power Receptacles	43

1 SCOPE

1.1 Purpose

This Interface Requirements Document (IRD) establishes the Spacecraft technical interface baseline between the EOS–AM Spacecraft System and the chosen Launch Vehicle System. It provides key Spacecraft System interface requirements for potential Launch Vehicle bidders. The requirements in this document do not reflect or establish interface agreements between NASA and any Launch Vehicle provider.

This IRD documents physical, functional, environmental, and operational interface requirements in areas involving design, analysis, hardware, software, installation, test, operations, maintenance, and facility requirements. The requirements described herein represent the current understanding of a feasible interface.

MMC Astro Space will develop and maintain this Interface Requirements Document up until the start of Launch Vehicle integration. At that time the IRD shall form the basis for a LVS/EOS–AM ICD controlled by the Launch Vehicle Integration Contractor (LVIC), with the Spacecraft Contractor (MMC) providing the necessary support functions.

1.2 Effectivity

This document will be effective for the LV and EOS–AM Spacecraft systems which are to be integrated together and launched from the Vandenburg Air Force Base (VAFB), utilizing the Western Space and Missile Center (WSMC) Space Launch Complex. If facilities identified herein are not compatible with a launch on the contractor's launch vehicle, the contractor shall supply facilities with equivalent capabilities which are compatible with payload processing necessary for that launch vehicle.

1.3 Definitions

1.3.1 Encapsulation

Installation of the payload fairing around the Spacecraft. Encapsulation may occur either prior to or after delivery to the launch pad.

1.3.2 Flight Vehicle System (FVS)

The flight and ground elements of the integrated launch vehicle (LV) and Spacecraft (SC).

1.3.2.1 Flight Support Equipment

The portion of launch vehicle flight hardware which is unique to a particular mission, e.g., Payload Fairing (PLF) access doors, special A/C ducting or diffusers, PLF acoustic blankets, Contamination and thermal barriers, flight termination system, Spacecraft Adapter (SCA), separation system, etc.

1.3.2.2 Flight Vehicle (FV)

The integrated flight vehicle includes: (1) the launch vehicle; (2) Spacecraft; and (3) all mission unique airborne items such as Spacecraft adapter (SCA), separation system, and other mission kit items.

1.3.2.3 Launch Vehicle System (LVS)

LV and its ground elements.

1.3.2.4 Launch Vehicle Ground Elements

LVS ground system consists of the ground equipment and facilities at the launch complex (LC) necessary to receive, support, handle, integrate, checkout, and launch the LV.

1.3.2.5 Spacecraft System (SCS)

The SCS consists of the EOS–AM Spacecraft and its ground elements.

1.3.2.6 Spacecraft (SC)

EOS–AM Spacecraft.

1.3.2.7 Spacecraft Adapter (SCA)

Mechanical interface between the LV and EOS–AM Spacecraft.

1.3.2.8 Spacecraft Ground System

The SC ground system consists of the ground equipment and facilities at the LC necessary to receive, support, handle, integrate, checkout, and launch the SC aboard the LV.

1.3.2.9 Spacecraft Separation System

Mechanism used to separate the SC from the SCA/LV. Includes Separation Springs, Separation Nuts or Bolts, Attachment Hardware (e.g., torque plates and the means to attach the plates to the SC), Electrical Connectors, Pyrotechnic Equipment, and separation indication equipment.

1.3.3 Launch Vehicle Integration Contractor (LVIC)

The prime contractor for the LVS system. The LVIC is responsible for both the physical and analytical integration of the SC to the LV, for providing LVS data, and for overall integration coordination of the LVS with SCS.

1.3.4 Spacecraft Contractor

Martin Marietta Corporation (MMC) Astro Space is the prime contractor for the EOS–AM Spacecraft. MMC is responsible for providing integration support, SCS technical data and requirements to coordinate the interface of the SCS with the LVS.

2 DOCUMENTS

2.1 Applicable Documents

The following documents of the exact issue as specifically stated in the applicable documents form a part of this ICD, including all contractually approved changes. In the event of conflict between this document and the applicable documents, this document shall govern.

2.1.1 Specification

Military

MIL–B–5087B 31 Aug 70	Bonding, Electrical, and Lightening Protection for Aerospace Systems
MIL–P–27401C 20 Jan 75	Propellant Pressurizing Agent – GN_2.

2.1.2 Standards

Federal

FED–STD–209B 30 May 76	Cleanroom Work Station Requirement, Requirement, Controlled Environment

Military

DOD–W–83575A 1 Mar 73	General Specification for Wiring Harness, Space Vehicle, Design and Testing
MIL–STD–1246A 18 Aug 67	Military Standard Product Cleanliness Levels and Contamination Control Program
MIL–STD–1576 31 Jul 84	Military Standard, Electroexplosive Subsystem Safety Requirements and Test Methods for Space Systems

2.1.3 Other Documents

ASTM Method E 595–90, Apr 1985	Standard Test Method for Total Mass Loss and Collected Volatile Condensable Materials From Outgassing in a Vacuum Environment

(This page intentionally left blank.)

3 INTERFACE DEFINITION

During the period between contract award and SC CDR kick–off (currently scheduled for 11/1/93), the LVIC shall demonstrate complete compatibility between the LV and the CDR version of the SC. Analyses shall establish LVS compatibility with the SC mechanical and environmental interface requirements existing at the time of contract award. Where MMC review of the analysis results is required, sufficient time shall be allotted for MMC review prior to CDR kick–off.

The current configuration of the EOS–AM Spacecraft is shown in Figures 1 and 2.

3.1 Physical Interfaces

3.1.1 Envelopes

3.1.1.1 Payload Fairing Envelopes

The payload fairing (PLF) static and dynamic envelopes shall be such that no Spacecraft to PLF contacts can occur at any time during ascent, assuming the Spacecraft meets the Spacecraft static envelope defined in Figure 3 and the stiffness criteria defined in paragraph 3.2.1.1. LV–unique stay–out zones which may intrude into the above static envelope shall be identified.

3.1.1.2 Hardware Clearances

A minimum allowable LV–to–SC clearance margin of 1 inch shall be maintained during all phases of the launch through PLF jettison.

3.1.1.3 Payload Fairing Configuration

The Payload Fairing shall be capable of accommodating doors, air conditioning equipment, and blankets as necessary to meet Spacecraft access and environment requirements.

3.1.2 Mechanical

3.1.2.1 Attachment

3.1.2.1.1 SC Adapter (SCA)

The SCA shall interface with the SC at the six discrete nodes shown in Figures 4 and 5.

The LVIC shall be responsible for the design, manufacturing, and testing of the SCA.

The LVIC shall supply an adapter qualification test unit for modal and static loads testing with the EOS–AM Spacecraft structure by December 1995. (MMC will supply the LVIC an interface template by December 1994 to support the fabrication of this test SCA.) The flight adapter shall be supplied to MMC by L–15 months for fit check and inclusion in Spacecraft environmental tests.

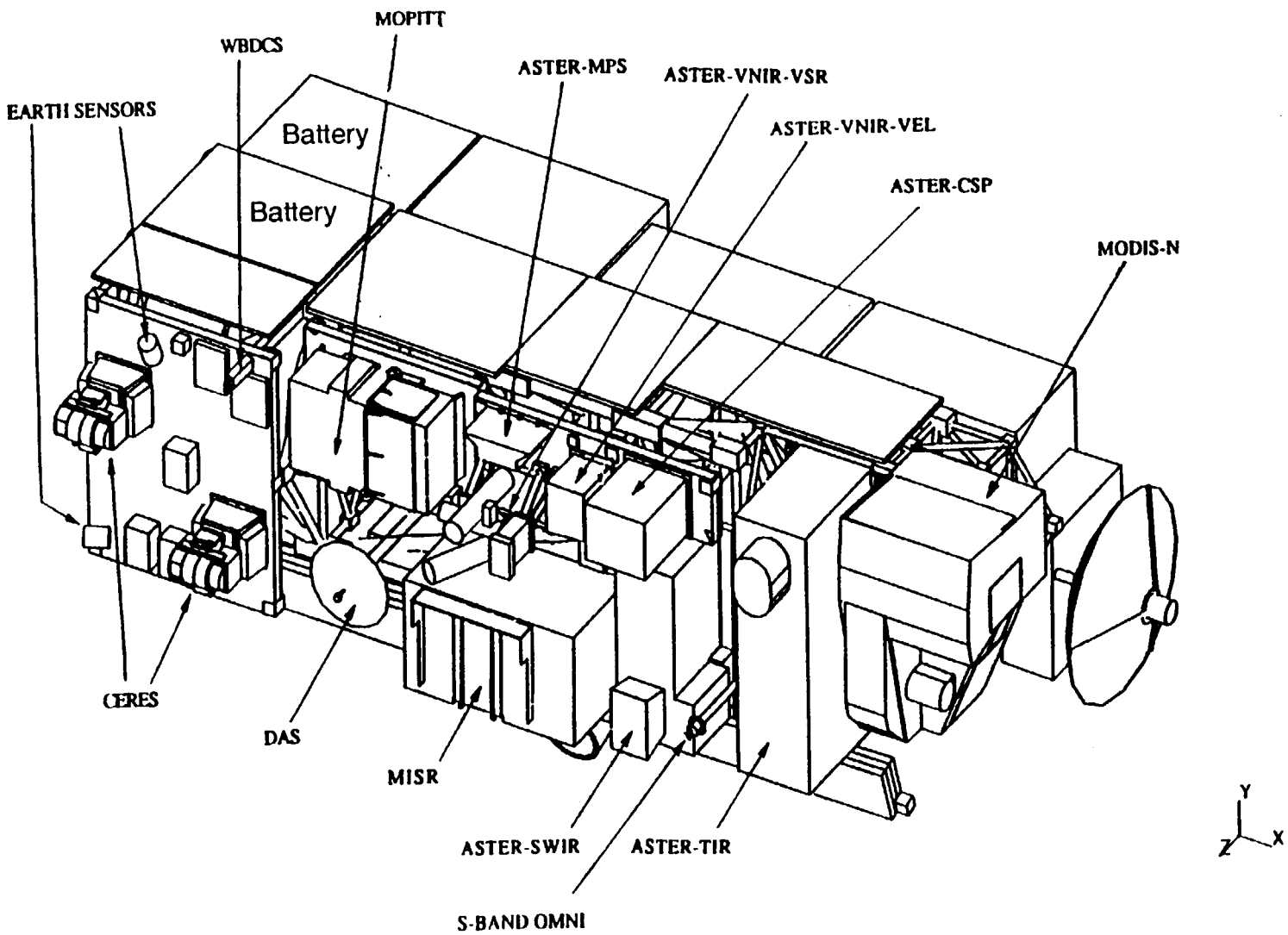

Figure 1. EOS–AM Spacecraft – Nadir View

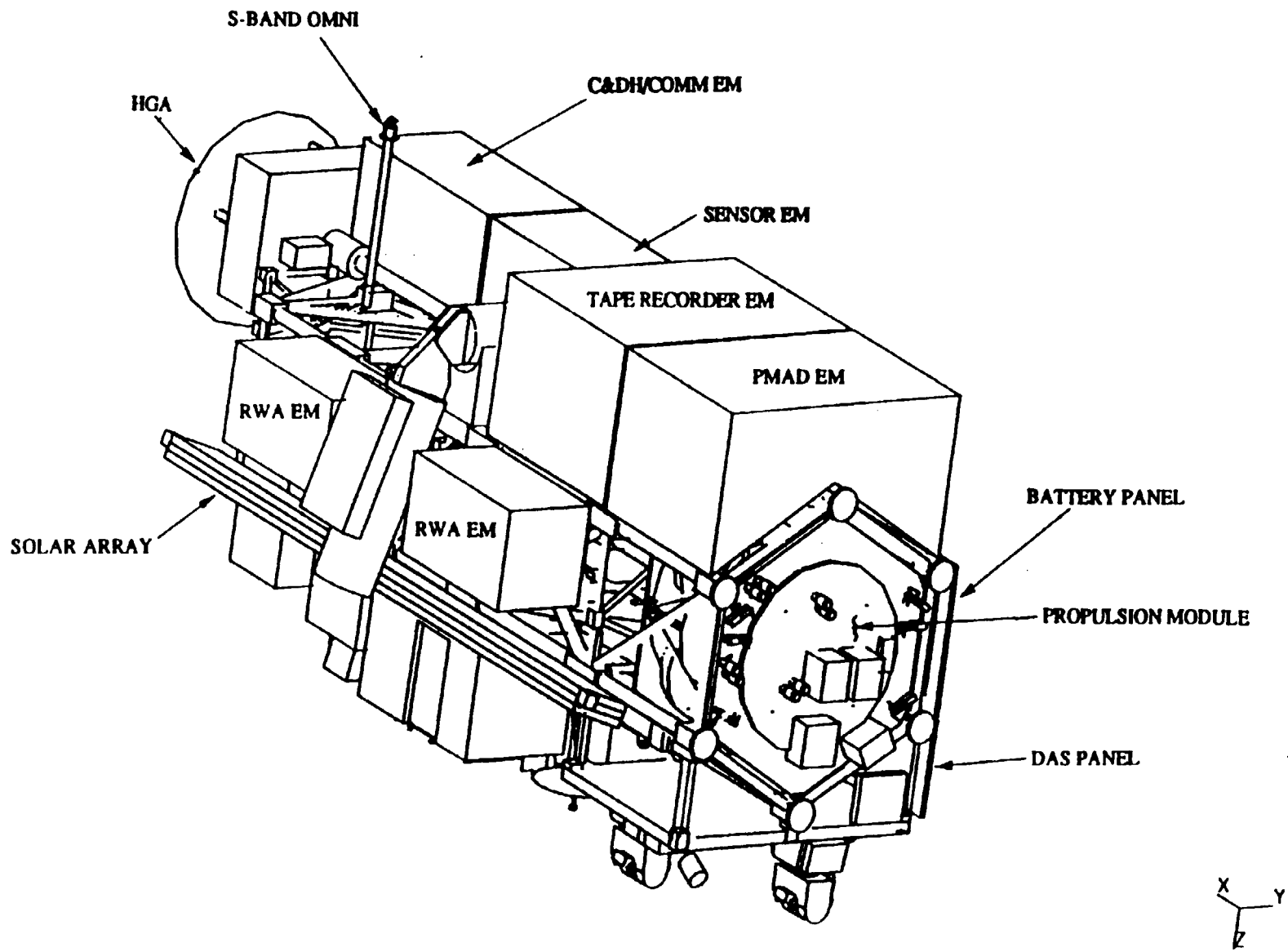

Figure 2. EOS–AM Spacecraft – Zenith View

IS20008503
30 April 1993

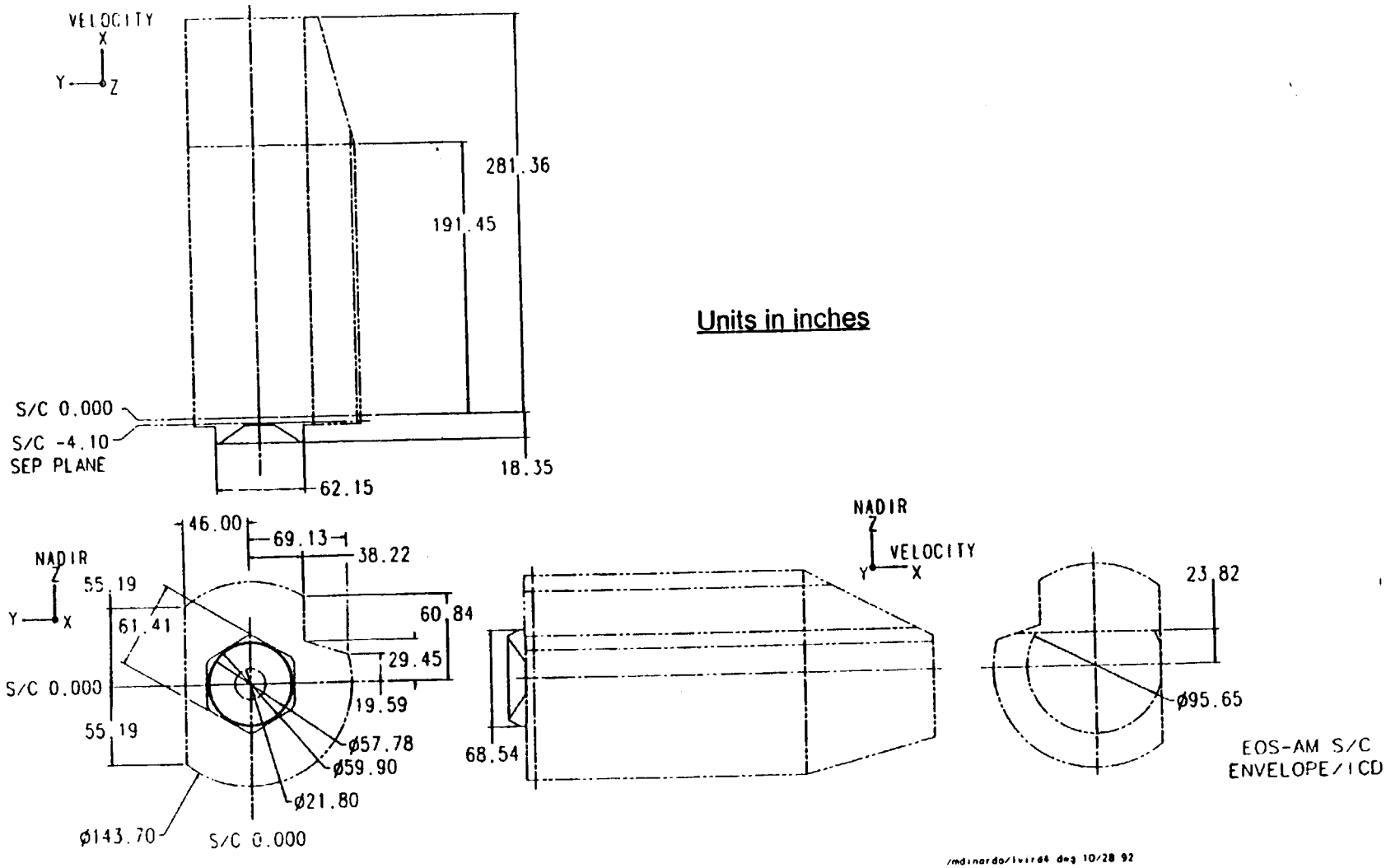

Figure 3. EOS–AM Static Envelope

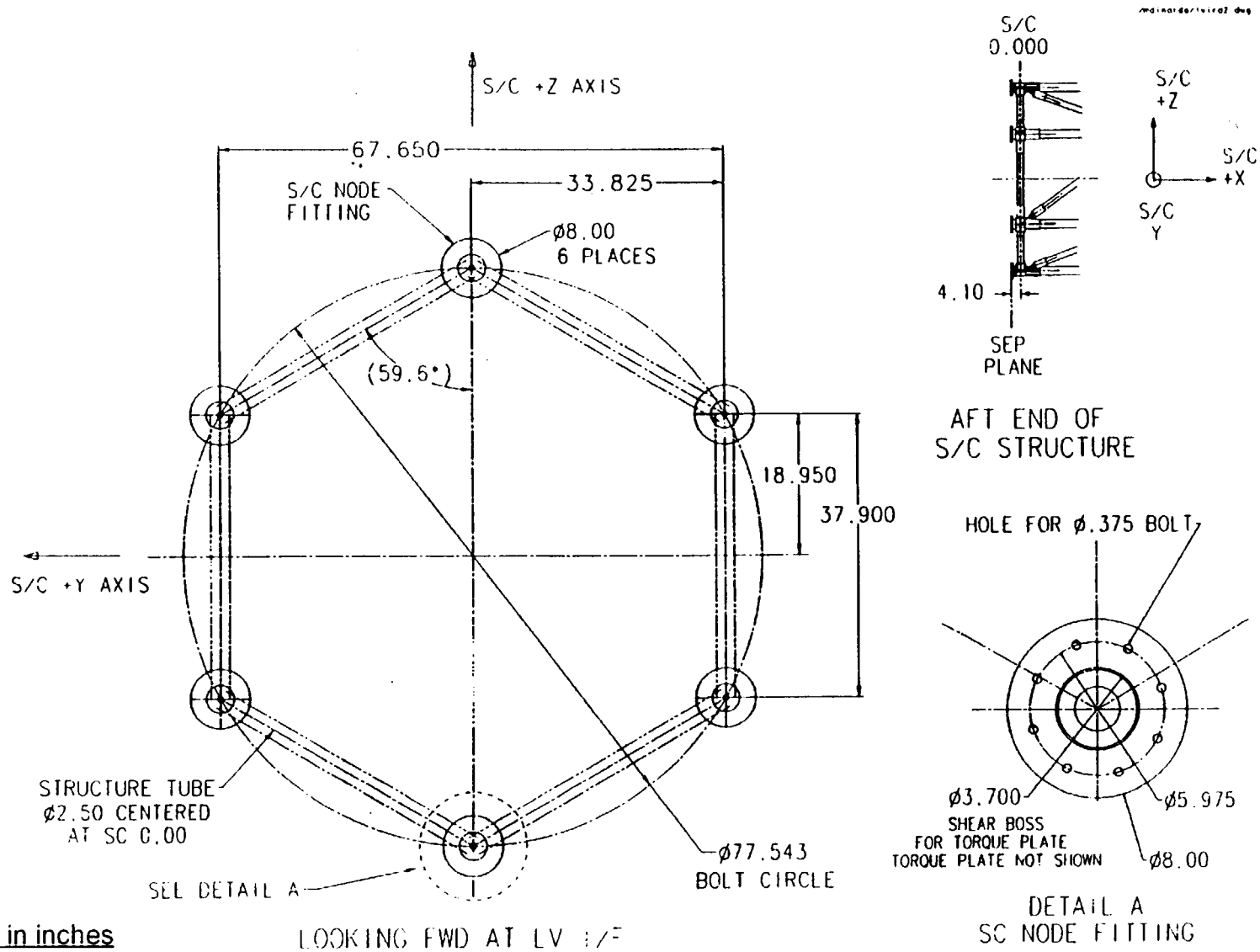

Units in inches

Figure 4. Aft End of EOS–AM Spacecraft

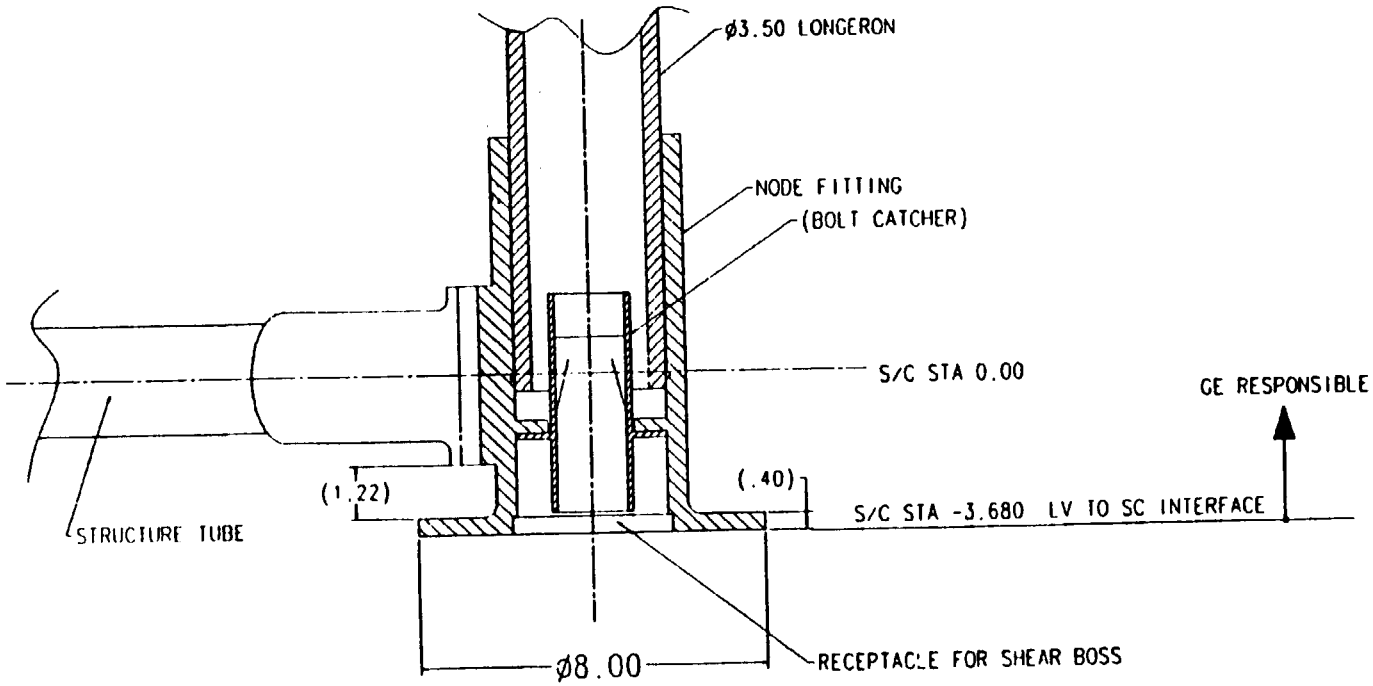

SPACECRAFT NODE FITTING
SECTION VIEW THRU CENTER OF NODE FITTING

Units in inches

LAUNCH VEHICLE
INTERFACE

Figure 5. EOS–AM Node Firing

3.1.2.1.2 PLF Interface Plane

The PLF/LV interface plane shall be located so as to ensure that the PLF sectors physically cannot impact the SC during separation and that shock levels remain below those specified in Figure 19.

3.1.2.1.3 SC Separation System

3.1.2.1.3.1 LVIC Responsibilities

The LVIC shall supply the separation system described in 1.3.2.9 (without pyrotechnics) for testing by Dec 95. The flight separation system with two sets of the required pyrotechnics shall be supplied to MMC by L–15 months for fit check, separation test, and inclusion in Spacecraft environmental tests.

The LVIC shall be responsible for the designing, manufacturing, and initial testing of the SC Separation System. With the separation system deliveries to MMC, the LVIC shall supply any test equipment unique to testing or handling the separation system (e.g., that equipment required to compress the springs to check spring constants)

3.1.2.1.3.2 Separation System Concept

The SC Separation System shall be a self–contained system (i.e., no loose parts). The separation system shall interface with the SCA and SC.

The separation system concept the SC Contractor is currently designing to is depicted in Figure 6. This concept assumes that each of six torque plates is bolted to a SC node fitting using eight attachment bolts which react tension loads between the SC and LV. The torque plate includes a shear boss which interfaces with the node fitting to transfer shear loads. The separation plane is between the torque plate and the SCA. Springs are used to effect the actual separation.

3.1.2.2 Flight Support Equipment

The SC flight support equipment (FSE) shall be designed, manufactured, and tested by the LVIC, and shall include all mission peculiar hardware on the FV except the separated Spacecraft. The FSE shall include the SCA, separation system, and all airborne mission kit items.

3.1.2.3 Flight Termination System

A SC Flight Termination System (FTS) shall be used to disperse SC toxic propellant in event of mission termination during ascent. The system shall be supplied by the LVIC as part of the SC mission kit.

The LVIC shall conduct all required analyses and provide all SC destruct interface hardware necessary to ensure the FV meets all Range Safety requirements.

All Destruct System hardware is assumed to be an integral part of the LV. No portion of the SC Destruct System shall be located on the SC side of the SC/SCA interface plane.

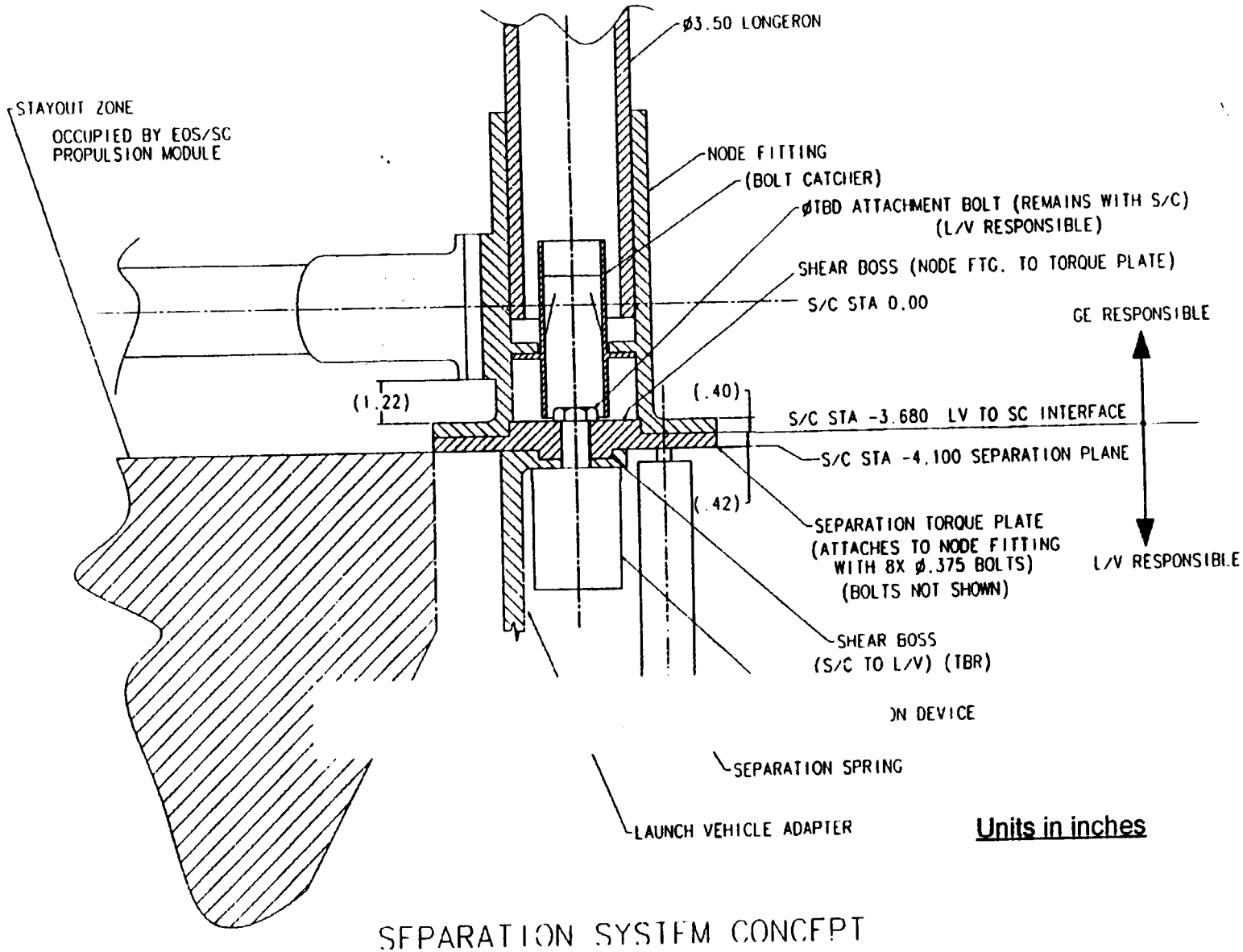

SEPARATION SYSTEM CONCEPT

Figure 6. Separation System Concept

3.1.2.4 Coplanarity

Once the LV and SC are mated, each SC node interface plane shall contain no point which is vertically offset by more than .03 inches from the corresponding point on any other SC node interface plane.

3.1.2.5 Flatness

The flatness across each plane at the six interface points of contact with the SC shall be, as a minimum, flat to within 0.01 inches for each 12 inches of length.

3.1.2.6 Alignment

Lateral alignment of the SC to LV centerline, at the LV interface plane shall be within .03 inches. The SC to LV centerline shall be vertically aligned to within ±.05 degrees.

The LVIC is responsible for final alignment of the FV system.

3.1.2.7 Adapter Assembly

The SC shall be mated to the SCA prior to encapsulation in the PLF.

3.1.2.8 Access Provisions

Access openings to the SC Safe and Arm devices, enable plugs,selected instruments, and the propellant pressurant and detanking valves shall be provided in the PLF.

Openings for air conditioning inlets and omni antenna testing shall also be provided as necessary to meet the air conditioning requirements of this document.

The LV shall allow access through the PLF to two propellant line valves.

The LV shall allow access through the PLF for the physical attachment of purge line interfaces to SC instruments. (Instrument purge requirements have not yet been identified).

(Representative estimate of access door locations given in Table I. Ranges indicate that doors may be required within the area encompassed by that range.)

3.1.3 Electrical Interface

3.1.3.1 SC to LV Interface

The electrical interface connectors between the SC and the LV shall be "zero–force" separation type connectors. They shall be located external to the SC Propulsion Module (PM) base panel at the base of the SC such that no openings are required in the SCA to allow access.

The LVIC shall provide both halves of SC electrical interface/separation connectors, all harnessing and cabling aft of the separation connectors, and the power and signals required to execute separation. The LVIC shall provide the SC half of the flight connectors and the corresponding non–flight LV halves by July 95 along with approx 10 ft of cabling from the connector pins on the LV halves. MMC shall integrate the connectors with the SC and SC electrical harness.

Table I. Potential PLF Access Requirements

Description	Location*** in. above SCA/SC I/F	Azimuth* (deg)
Instrument Access #1	4–255	300–60
Instrument Access #2	4–255	320–40
Solar Array Safe and Arm	225	300
HGA Safe and Arm	115	300
Omni Antenna Test	190	0 and 180
Battery Enable Plug Access	–3	100
Battery Air Conditioning Access**	–3	100
Tank Access #1	18	300

*SC clocking not yet determined. Azimuth shown to depict relative locations.
**Access is needed for Battery cooling during charging if ducting is not used.
***Ranges depict range of potential locations, not desired door width.

3.1.3.2 Connector Interface Wiring

The LV shall supply pins at the SC/SCA interface and SC dedicated umbilical cables for the functions listed in Table II.

3.2 Functional Interface

3.2.1 Structure and Loads

The LV and SCA structure assembly shall accommodate the SC weight with a SC center of gravity as defined in Table IV for loads resulting from pre–launch, and flight phase activities. Flight loads analysis of the FV are determined by the LVIC through integrated analyses using SC models generated by MMC.

The loads generated by the LV and the SCA at the SC CG shall not exceed the levels defined in Table III.

Table II. General pin Functions

Signal Function	Cable Type[3]	Quantity of contacts
Power: 120Vdc, 1000W	#20T5[4]	5
Battery Charge: 5 Amp/battery	#20T5[4]	10
Test points	#20TS2[2]	61
Hardline Command	#20TS2[2]	6
Hardline Telemetry	#20TS2[2]	12
Ascent Telemetry	#20TS2[2]	12
Separation Indication	#20T2[1]	8 (max 4 per connector)
Continuity Loop	#20T2	4 per connector
Total		**118**

[1]T2: Twisted Pair [2]TS2: Twisted Shielded Pair (shield to be brought through on a contact)
[3] TS2 may be substituted for T2 if standard interface has insufficient T2 quantities
[4] Sets of four twisted wires plus a ground wire per bundle

Table III. Net CG Load Factors

Event/Condition	Longitudinal (Axial) (G)	Lateral (G)	Torsion (G)
Liftoff	–3.2C/–0.2C*	±3.5	±0.5/in
Max Air Load	–3.0C/–1.0C*	±3.0	±0.5/in
Engine burn–out	–6.5C/+2.5T**	±2.0	–

*Compression **Tension

3.2.1.1 Stiffness

The stiffness of the LV and the SCA shall be such that deflections under limit load will not allow any contacts between the Spacecraft and the launch vehicle to occur. Limit loads are considered to be the maximum load expected to occur in all phases of flight. The first mode lateral and thrust frequencies of the SC cantilevered from a rigid interface with the SCA are expected to exceed 9 Hz and 25 Hz respectively.

3.2.1.2 Factors of Safety

The ultimate factors of safety for structural design of the SCA and separation system shall be 1.40. In addition, there shall be no structural yield when subjected to loads 1.25 times the limit load.

3.2.1.3 Strength

The LVIC shall ensure that LV/SC structural interfaces possess positive margins of safety for the entire mission.

3.2.1.4 Interface Loads

The LVIC shall determine and supply the predicted LV/SC loads, accelerations and deflections for all critical flight events. The LVIC shall conduct such a coupled loads analysis with full results available 6 weeks prior to the beginning of subsystem CDRs, currently scheduled to begin Mar 94. The LVIC shall also complete a verification coupled loads analysis approximately L–17 months prior to launch.

3.2.2 Mass Properties

3.2.2.1 Spacecraft Mass Properties

The SC mass properties are as presented in Table IV. The LV shall be capable of delivering to the injection orbit a Spacecraft whose SC center of gravity (CG) maximum offset is in accordance with Table IV.

3.2.2.1.1 Separated Spacecraft Weight

The LV shall be capable of lifting a separated Spacecraft weight which does not exceed the separated Spacecraft weight provided in Table IV.

3.2.3 Avionics

3.2.3.1 Electrical Interface

Electrical (hardline) interfaces between the SCS LSE and SC are shown in Figures 7 and 8. The primary electrical interfaces are from the SC to the Launch Services Building (LSB), and from the LSB to an off–site Spacecraft Checkout Station.

Functions required across the SC separation plane are defined in Table II.

Table IV. SC Mass Properties Summary (SC Coordinates)

Separated Spacecraft Weight (lb)		11,100
Center of Gravity		
Vertical Offset (from separation plane) (in)		100–116
Radial Offset (in)		5
Mass Moments of Inertia		
Ixx (lbm–in sq)	1.58×10^7	±20%
Iyy (lbm–in sq)	7.21×10^7	±20%
Izz (lbm–in sq)	6.91×10^7	±20%
Products of Inertia*		
Ixy (lbm–in sq)	-2.25×10^5	±20%
Ixz (lbm–in sq)	$+1.79 \times 10^6$	±20%
Iyz (lbm–in sq)	-7.44×10^4	±20%
*Products are true products. (i.e., not in matrix form)		

3.2.3.1.1 SC to LSB

The LSB equipment rack will interface with the SC through the Umbilical Tower junction box and the LVS T–0 umbilical. This interface provides power, data and signal discretes to/from the SC. The LVIC shall ensure that the cable length required between the LSB equipment rack and the SC/SCA interface shall be less than 215 ft.

3.2.3.1.2 Spacecraft Checkout Station to LSB

Command and telemetry data links shall be provided between the Spacecraft Checkout Station and the LSB.

Control panels (CPs), located at the Spacecraft Checkout Station, will control LSB equipment racks and monitor Spacecraft operation.

3.2.3.1.3 Ascent Data Relay

The LV shall accept 1 kbps of Spacecraft ascent telemetry to be interleaved with the launch vehicle telemetry for continuous relay to the ground from lift–off through Spacecraft separation.

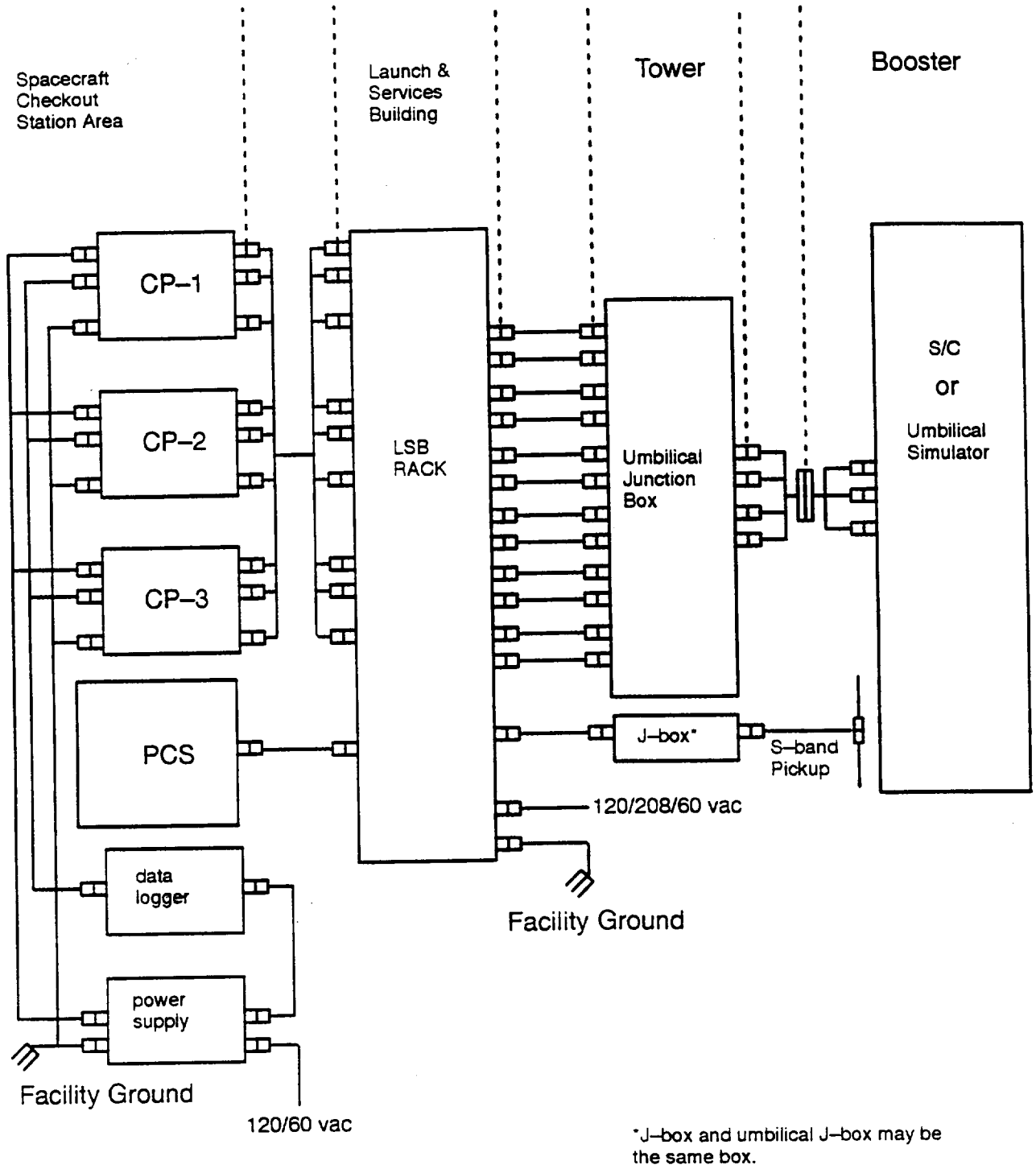

Figure 7. LSE Functional Interfaces

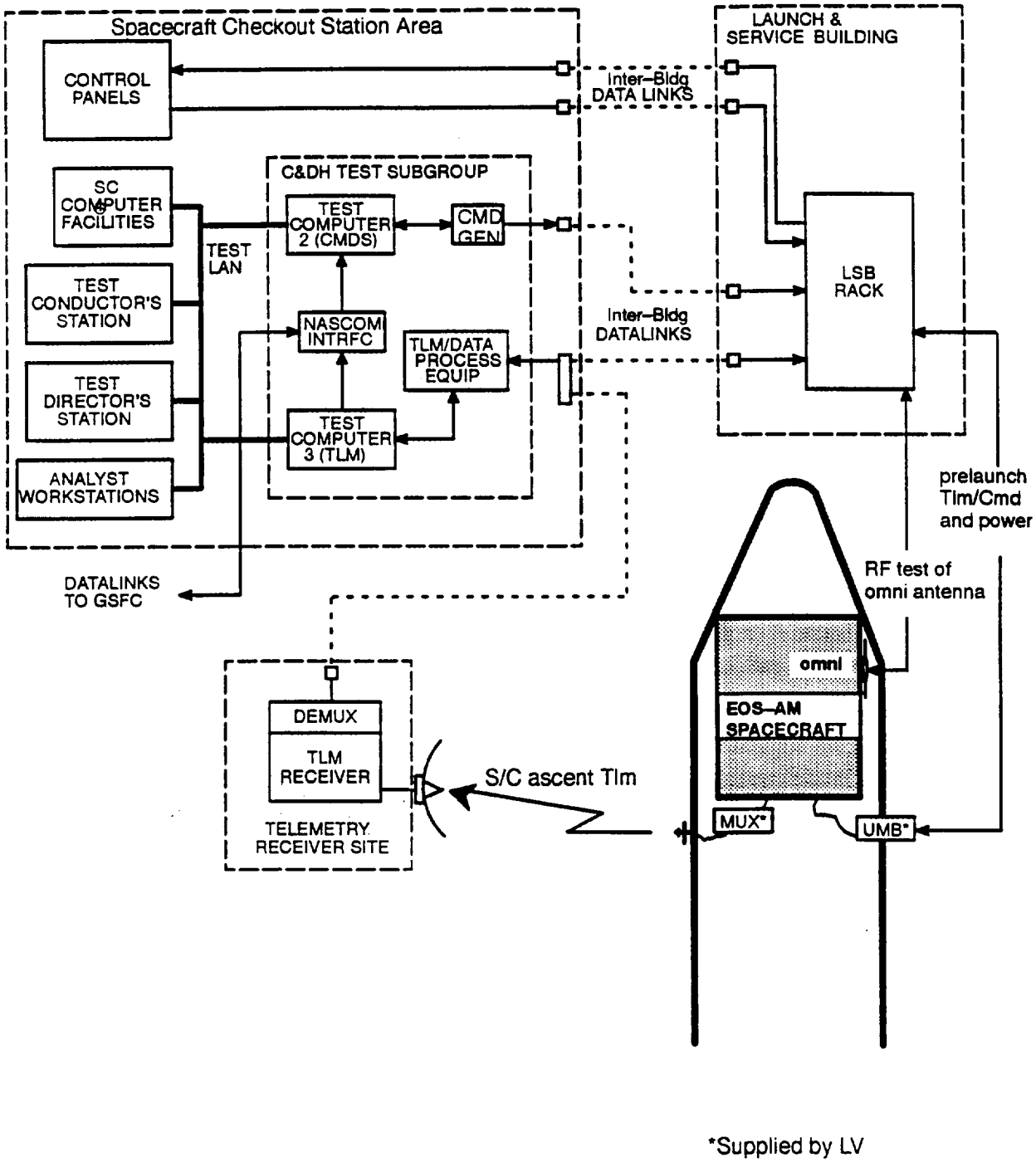

Figure 8. Post–Mate Support Equipment Configuration

3.2.3.2 Electrical Power

3.2.3.2.1 Pre–Launch Power

The LVS shall interface with and accept pre–launch power at the levels specified in Table II from the SCS power supplies located in the LSB, and shall transfer this power to the SC through the LVS T–0 umbilical.

3.2.3.2.2 Separation Pyrotechnic Power

The LVIC shall be responsible for supplying and operating the pyrotechnic harness and pyrotechnic devices used to separate the SC from the LV.

3.2.3.3 Electromagnetic Compatibility (EMC)

3.2.3.3.1 Grounding and Isolation

All signals and power between the SC and LV shall use dedicated return conductor (i.e., twisted pair) with return isolated from the chassis by 3 kohm minimum except RF signals. RF signals shall be carried over coax cables and connectors. EEDs and other safety critical circuits shall have return conductors isolated from the chassis by 1M ohm minimum when static bleed resistors are disconnected.

3.2.3.3.2 Shielding

The LVIC shall ensure LVS and Launch Site compatibility with the EOS–AM susceptibility requirements of Figure 9 (e.g., via PLF shielding). The SC susceptibility limits described in Figure 9 define the LVS and Launch Site limits on emissions which reach the Spacecraft.

Electrical interface cables between the LVS and SC shall provide cable bundle shielding per DOD–W–83575A for separate wire types (i.e., power, telemetry, commands) in order to protect signaling from the launch vehicle/ launch site environment. EED wiring shall have double shielded twisted pair cable and meet the requirements of MIL–STD–1576.

3.2.3.3.3 Bonding Requirements

The LV and SC shall be electrically bonded together with less than 2.5 mohm dc resistance. (Equivalent to MIL–B–5087B class R.)

3.2.3.3.4 EMI Safety Margin

The minimum acceptable safety margin shall be 6 dB for all circuits, except ordnance circuits which shall have safety margins of 20 dB.

3.2.3.3.5 Conducted Electromagnetic Interference

3.2.3.3.5.1 LV Conducted Emissions

LV conducted emissions shall not exceed the levels in Figure 10.

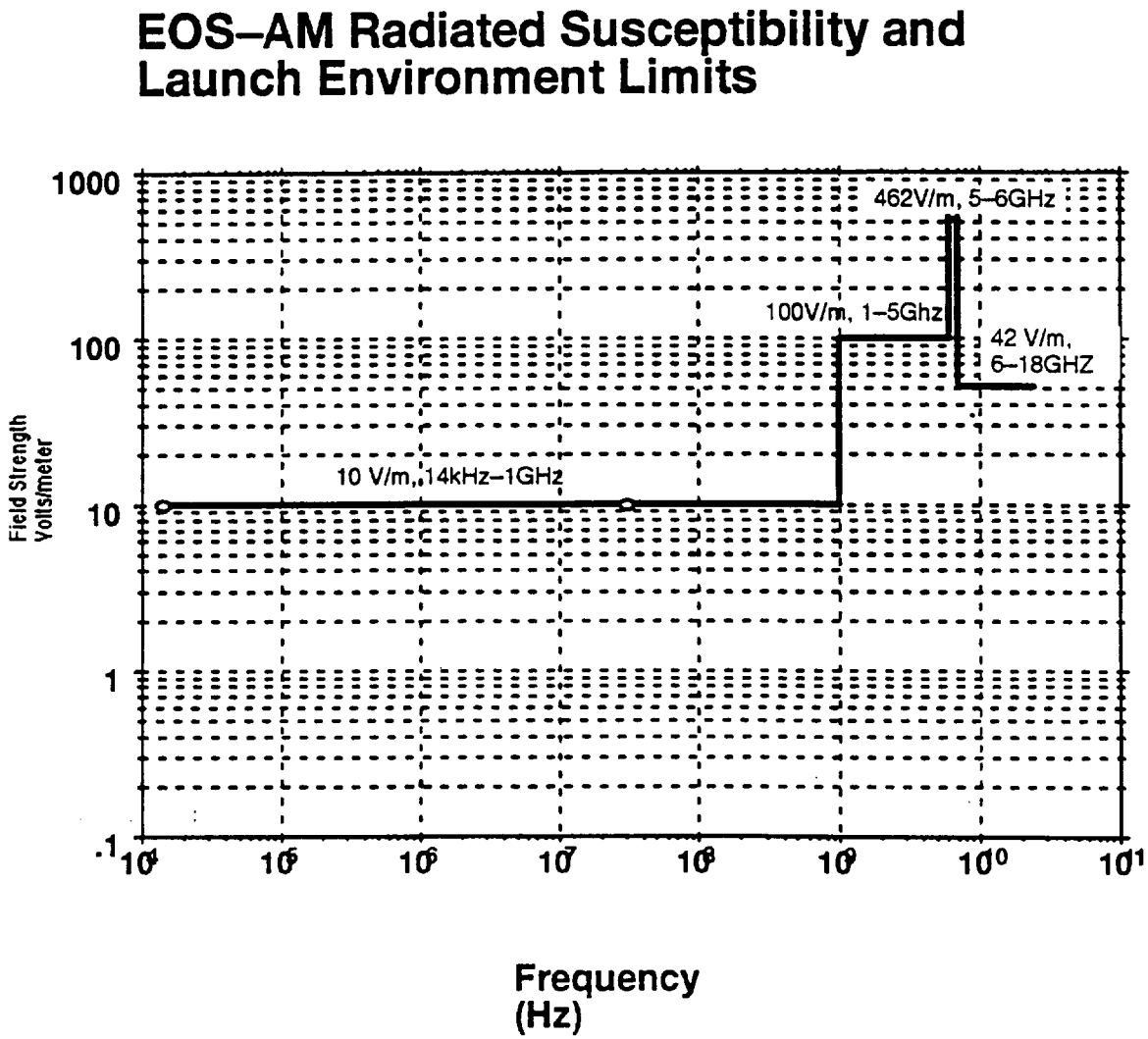

Figure 9. LV Radiated Emissions (14 kHz–18 GHz)

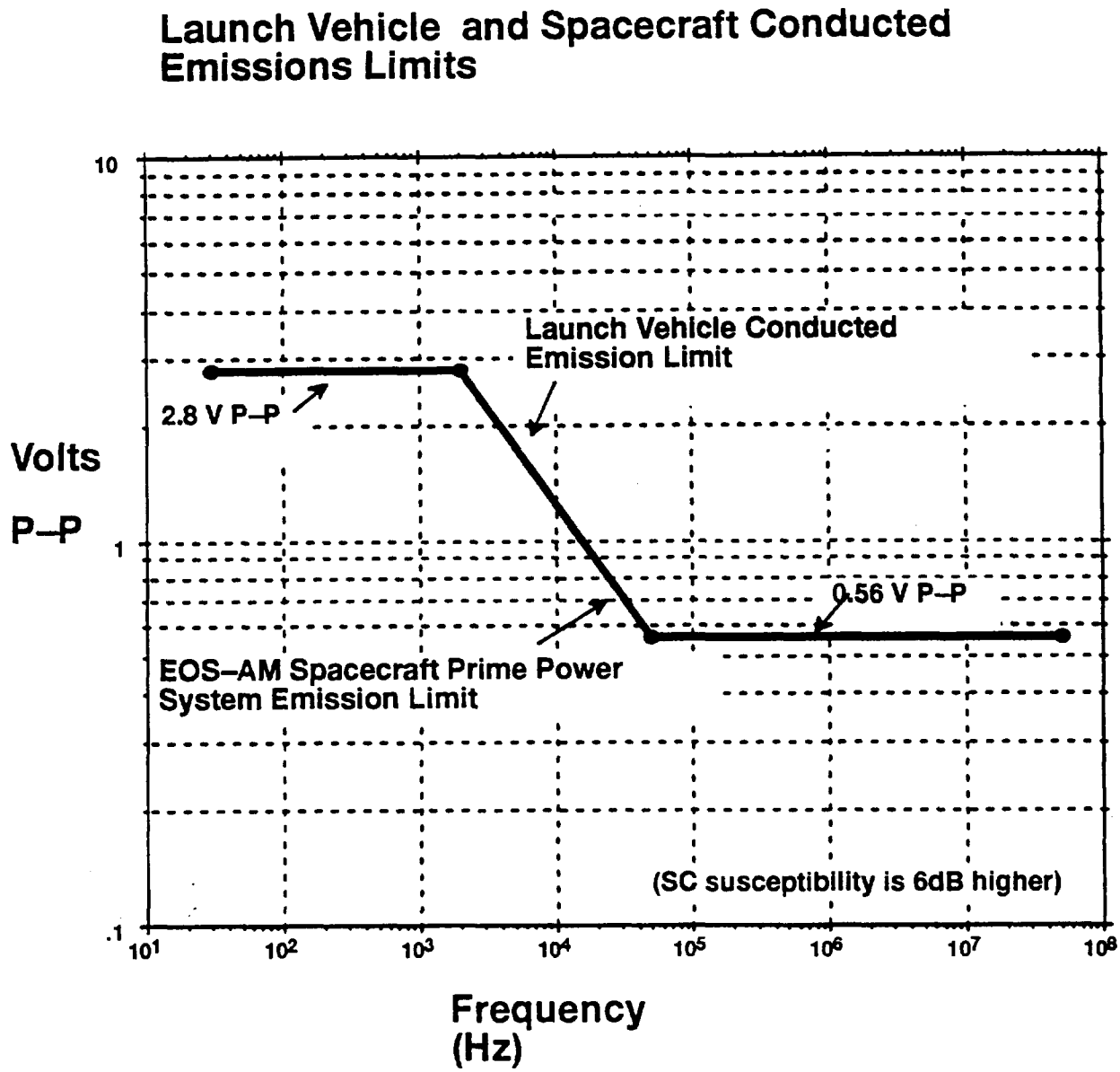

Figure 10. LV Conducted Emissions

3.2.3.3.5.2 SC Conducted Emissions

The LV shall tolerate Spacecraft conducted emissions at the levels in Figure 10.

3.2.3.3.6 Radiated Electromagnetic Interference

3.2.3.3.6.1 LV Radiated Emissions

The unintentional and intentional emissions from the LV shall be no greater than the values in Figure 9. LV unintentional and intentional emissions at the SC omni and high gain antennas shall not exceed 19 dBuV/m for 2.0364–2.1764 GHz (receive bandwidth based upon –40dB band rejection input filter). The radiated magnetic field from the LV shall not exceed the levels in Figure 11.

3.2.3.3.6.2 SC Radiated Emissions

The LV shall be capable of operating within SC radiated electric and magnetic fields to the levels shown in Figures 12 and 13, respectively. Intentional SC transmitter emissions will not exceed 20 V/m at the S–band transmitter frequency 1 meter from the S–band omni antenna.

3.2.3.3.6.3 SC Radiated Susceptibility

The LV shall not generate S–band emissions which exceed the Figure 12 Narrow Band and Broad Band limits at the SC receiver antenna.

The LV shall not generate intentional or unintentional emissions which exceed the EOS–AM levels in Figure 9. These levels represent the "out–of–band" (i.e., non–communication band) SC radiated susceptibility criteria.

3.2.3.4 Separation

3.2.3.4.1 SC Nominal Separation Detection

The LV shall monitor for SC separation from the LV, both planned separation and inadvertent. Verification of nominal SC separation shall be available in LV telemetry.

3.2.3.4.2 Separation Monitoring

If for safety reasons, the LV is required to have an inadvertent separation destruct system (ISDS), this system shall be independent of the SC separation detection hardware for nominal separation and shall be provided by the LV contractor.

3.2.3.5 Telemetry and Commands

During prelaunch activities, the LV shall provide the coax cable in Table II for communication from the EOS–AM Spacecraft through hardline data links.

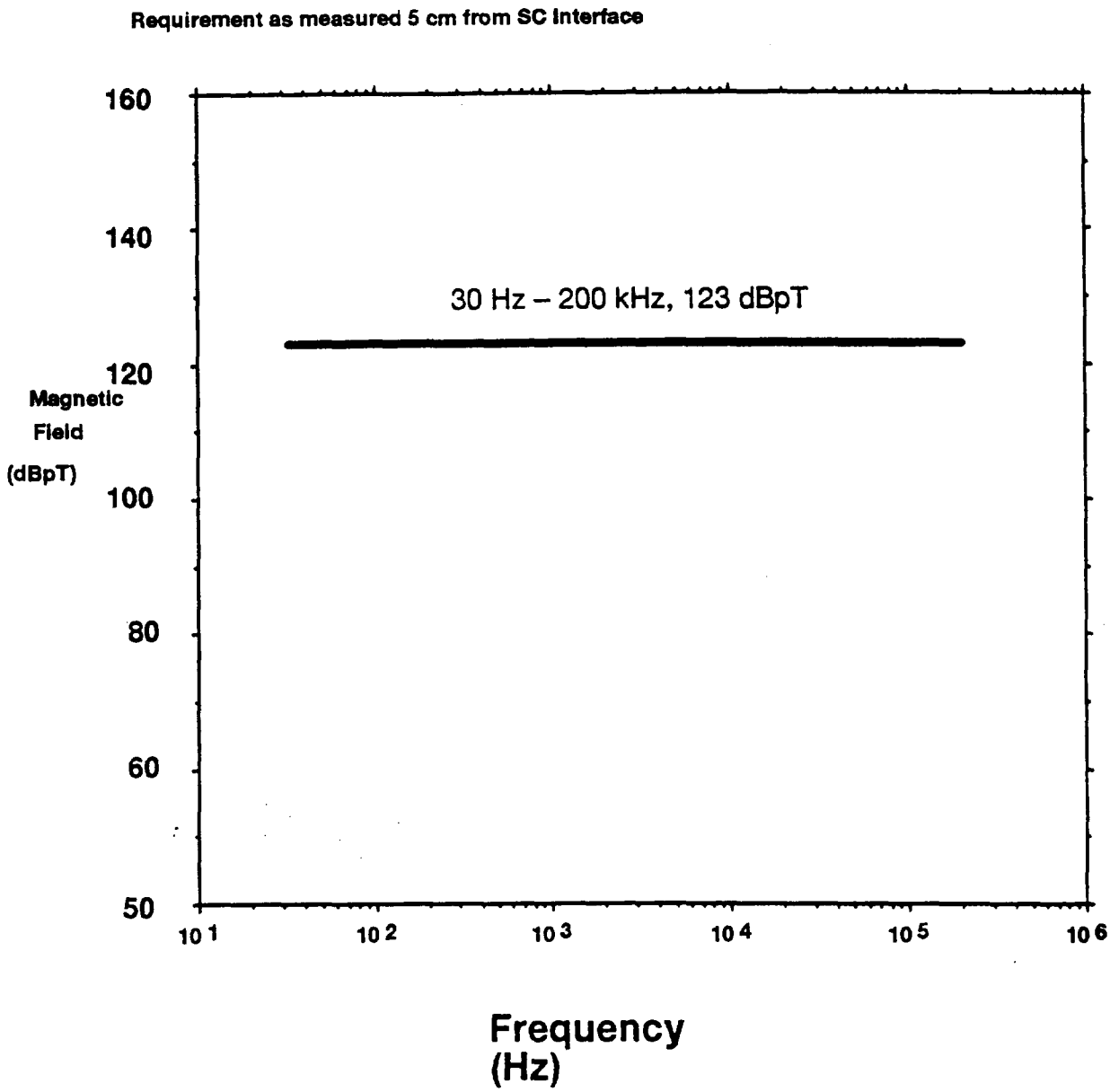

Figure 11. LV Magnetic Radiated Field

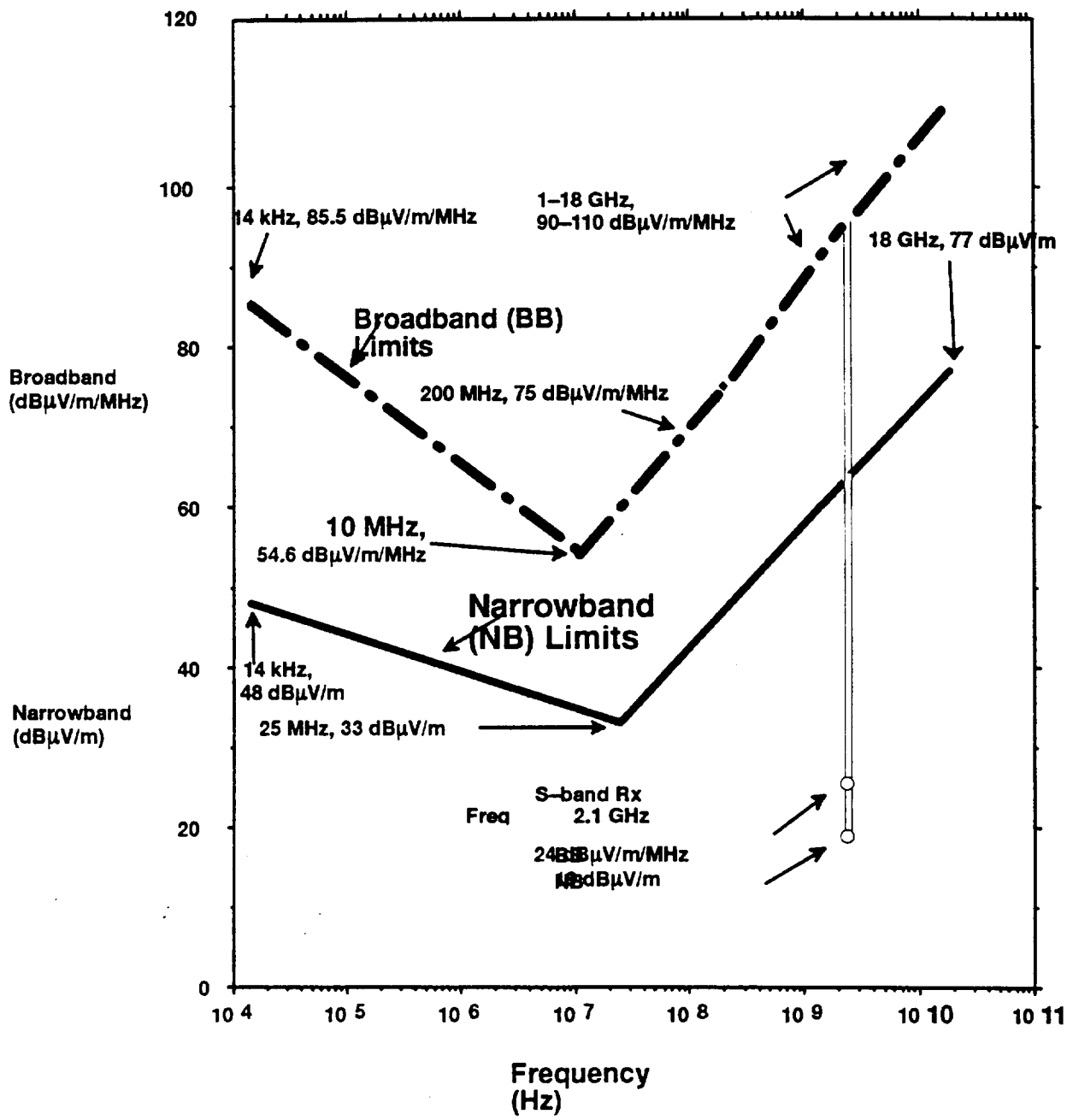

Figure 12. Spacecraft Radiated Emissions Limits

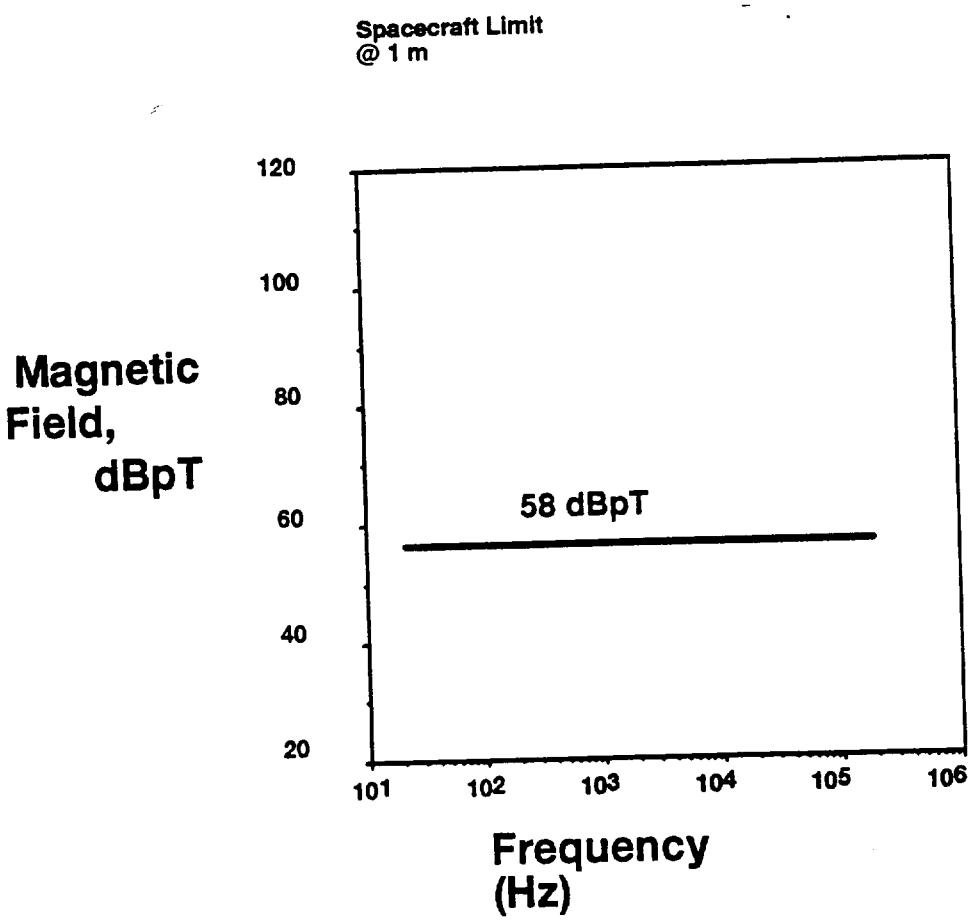

Figure 13. SC Magnetic Emissions Limits

Fromlift–off through separation the LVIC shall ensure real–time or near real time delivery ofSC telemetry to the NASA Telemetry Station.

3.2.3.5.1 Ascent Telemetry

The LVS shall accommodate two 1 kbps data interfaces containing Spacecraft ascent telemetry although only one interface will be active at any given time. The signal characteristics of each stream will be as provided in Table V and in 3.2.3.5.2.

3.2.3.5.2 Signal Characteristics

The data and clock will be compliant with EIA RS–422 and will use the standard interface circuit shown in Figure 14 and aligned as shown in Figure 15. The differential logic shown in Figure 16 will be used. The RS422 signal connections will be isolated from chassis ground by a minimum of 3 kilohms DC resistance and a maximum of 0.01 microfarads capacitance.

3.2.3.5.3 RF Links

The LVIC is responsible for conducting the end–to–end link analysis to ensure all SC data reaches the ground.

Table V. SC Hardline Telemetry (Preliminary)

Data Format:	NRZ–L
Bitrate:	1 kbps
Signal:	RS422
Amplitude:	+5V
Operation:	Prelaunch and Launch
Clock Rate:	1 kHz

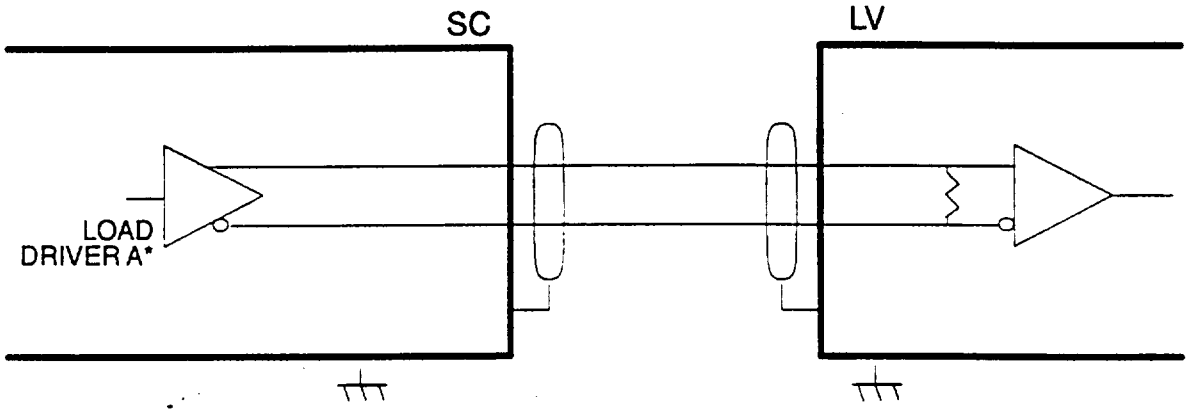

NOTES: Cable characteristic impedance (Z0) = 100 ohms
Twisted shielded pair = TSP
Proposed RS–422 Driver = 26C31 (Harris) or equivalent
Proposed RS–422 Receiver = 26C32 (Harris) or equivalent
RS–422 Driver output impedance (R0) = 15 ohms minimum
Terminating Resistor = 100 ohms TBR

Chassis Ground

Figure 14. SC to LV Digital Interface Circuit

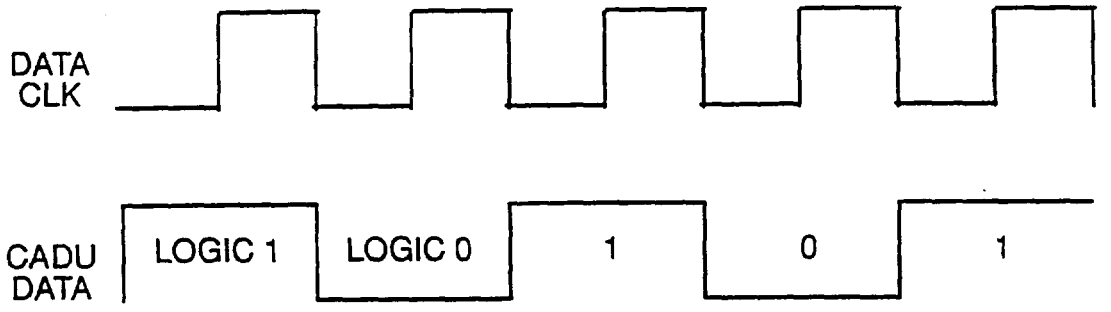

Rise and fall times: <= 100 nsecs for both clock and data
Clock: 1 KHz
Clock duty cycle: 50% ±10%
Clock to Data Skew: 100 nsecs max

Figure 15. Clock and Data Alignment

3.2.3.5.4 SC to LSB

The LVIC shall provide 50 ohm coax cabling from a Junction Box in the Clean Enclosure to the LSB for SC use in delivering omni antenna RF test data to the LSB.

3.3 Environmental Interfaces

3.3.1 Thermal

The SC to LV interface design and mission operations shall be such that all analytical predictions of component temperatures remain within their respective allowable limits. After SC encapsulation in the PLF, the LVIC shall be capable of providing local air conditioning to the SC batteries shown in Figures 1 and 2.

The LVIC is responsible for generating FV mission temperature predictions using reduced thermal math models of the SC, supplied by MMC. The LVIC shall provide thermal models of the LV interfaces and environments to MMC for SC preliminary design. Specifically, the LVIC shall provide a thermal description of environments generated by all LV surfaces and as seen by the SC, i.e., the PLF and all surfaces visible from the aft end of the Spacecraft, including through the SCA, during pre-launch and ascent.

3.3.1.1 Payload Fairing (PLF) Environment

3.3.1.1.1 Pre-Launch PLF Environment

The pre-launch PLF environment shall be controlled per para. 3.5.1.5.2 herein.

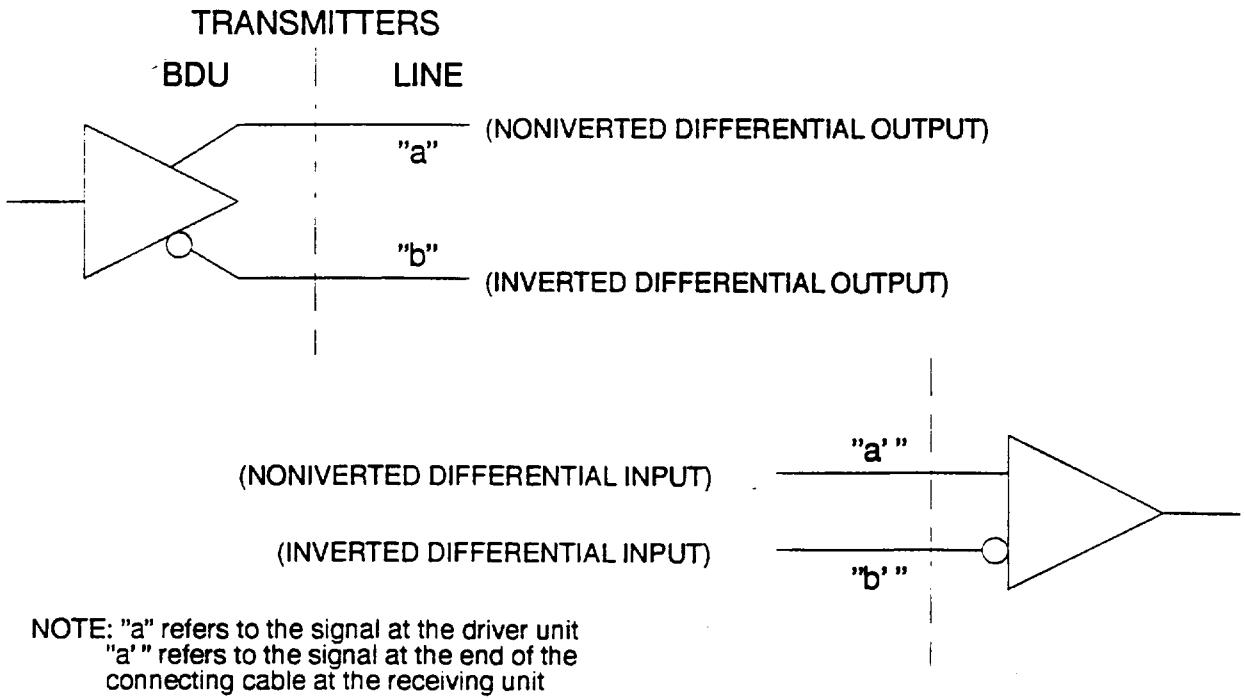

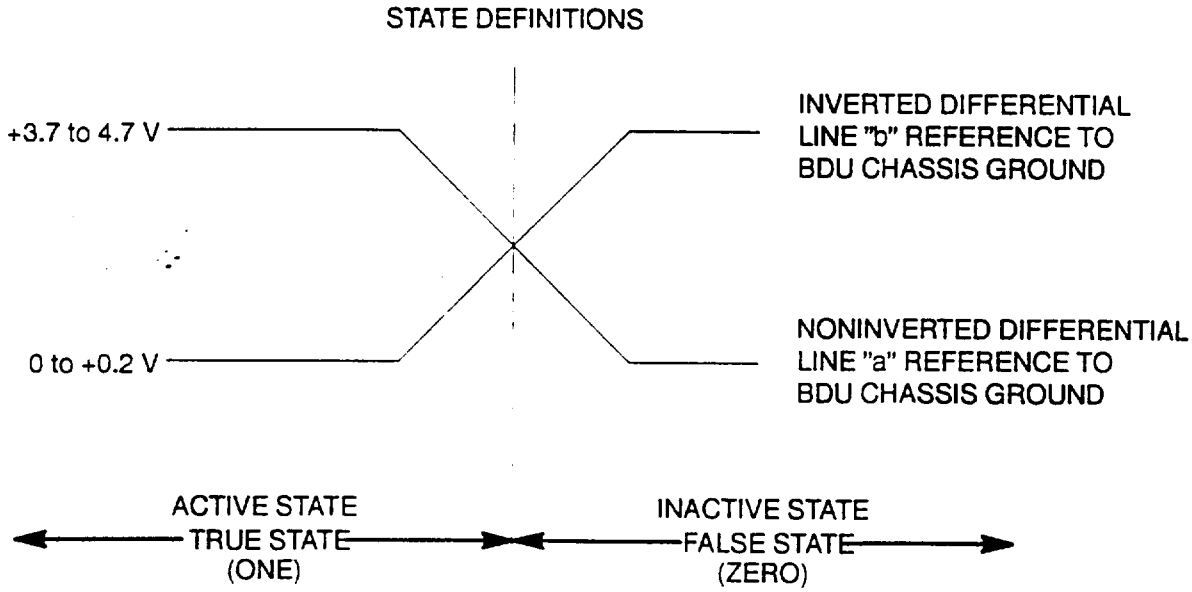

Figure 16. Differential Signal Conventions

3.3.1.1.2 Ascent Temperature

The inside skin of the PLF visible to the SC shall not exceed 121°C (250°F) with an emissivity of <0.3. Any inside surface acoustic blankets located in the PLF at the levels of the SC shall not exceed 82°C (180°F) with an emissivity of 0.86±.05.

3.3.1.2 Free Molecular Heating

PLF jettison shall occur at a point in the trajectory where the dispersed value of the free molecular heating rate to the SC is less than or equal to 360 BTU/hr–sqft, and where the rate would then decrease to less than 140 BTU/hr–sqft within 30 sec. Once below 140 BTU/hr–sqft, the peak FMH rate shall not again exceed 140 BTU/hr–sqft before SC separation. The dispersed value shall be based on a 3–sigma dispersion in atmospheric conditions and trajectory profile.

3.3.2 Contamination Control

3.3.2.1 Contamination Control Surfaces

The LV contractor shall verify by analysis that the environments imposed on the SC during prelaunch, ascent and separation phases are within limits specified in Table VI. The locations of the contamination sensitive surfaces identified in Table VI are shown in Figures 17 and 18.

3.3.2.2 Cleanliness of Airspace within PLF

The SC contractor intends to conduct SC pre–launch operations in such a manner as to maintain the volume forward of the base of the SC adapter to FED–STD–209 Class 10,000 particulate standards, both before and after encapsulation in the PLF. If required to meet these standards, the LV contractor shall supply contamination shields (non–flight) as necessary to prevent overall LV induced contamination on the SC which exceeds the levels in Table VI.

Table VI. SC Contamination Limits (Pre–launch to Separation)

Contamination Sensitive Surfaces	Molecular (Angstrom)	Particulate (% Obscuration)
Instrument Optics	50 (*)	0.3
Spacecraft Radiators	75	0.3
Earth Sensor (ESA)	75	0.3
Sun Sensor (SSA)	75	0.3
Star Tracker	75	0.3
All other SC surfaces	150	1.5

* Instruments with more stringent requirements will have contamination covers

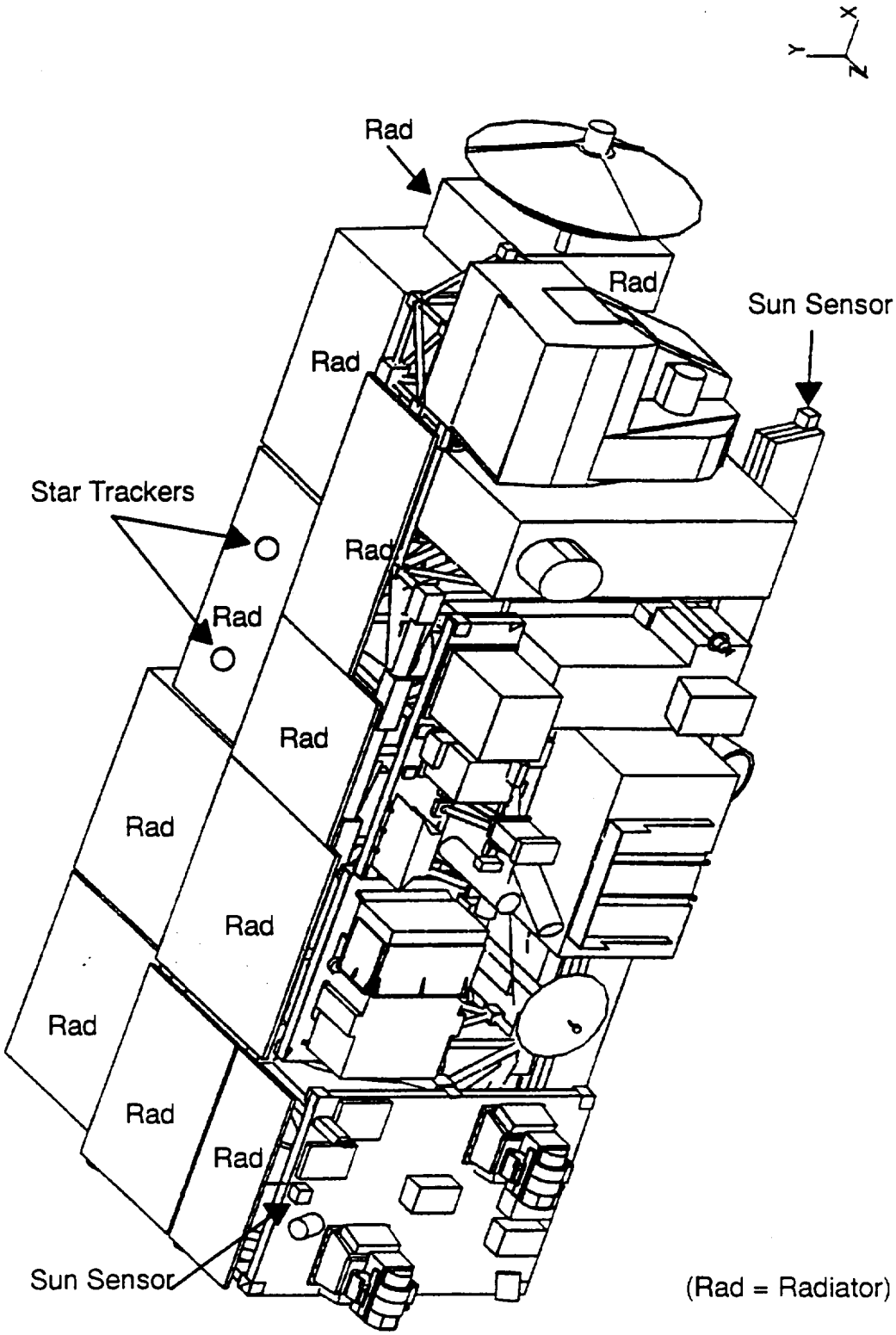

Figure 17. Contamination Sensitive Surfaces

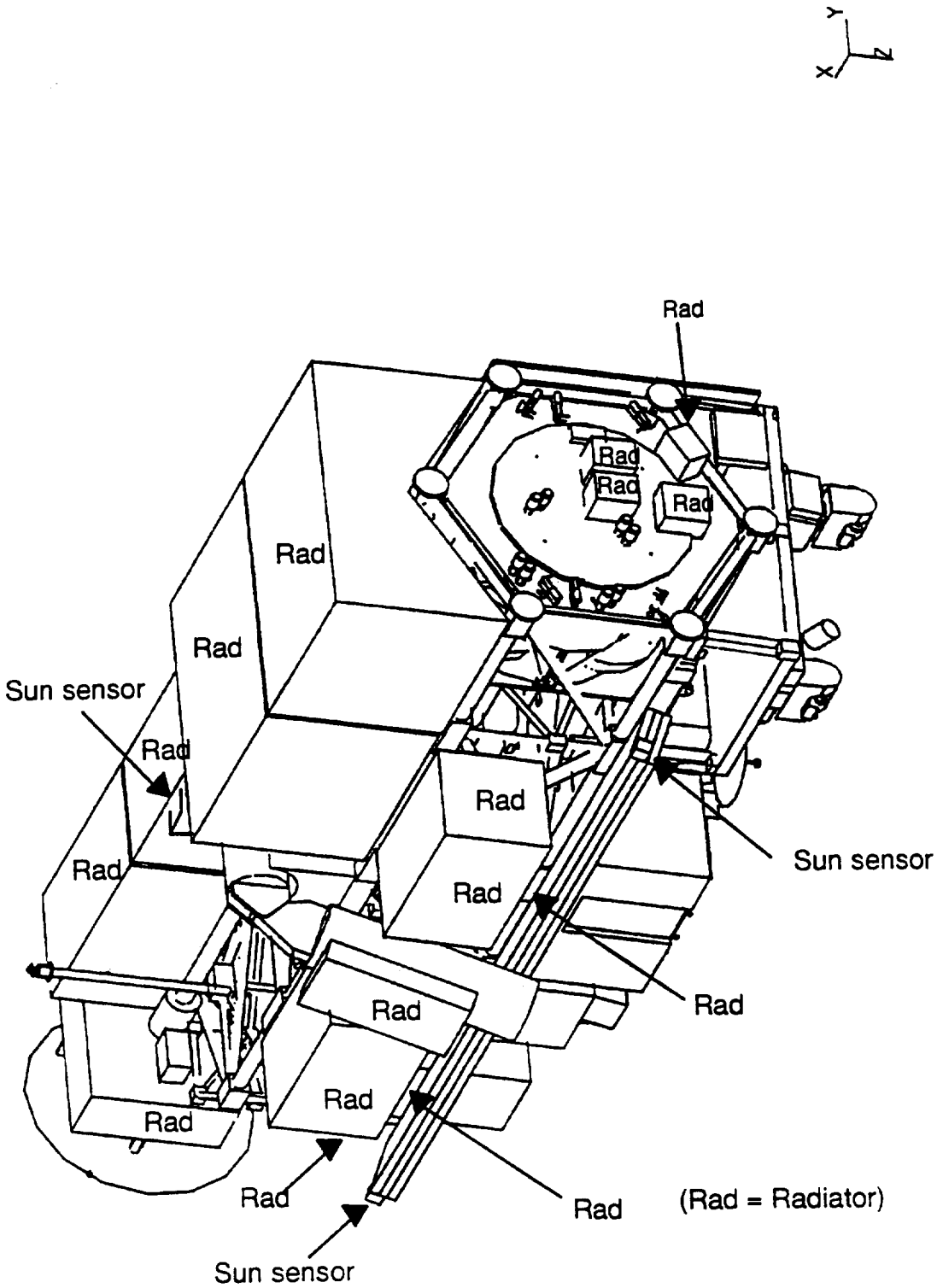

Figure 18. Contamination Sensitive Surfaces

3.3.2.3 PLF Cleanliness

The LV PLF internal surfaces shall be inspected for surface cleanliness and maintained at Visibly Clean Highly Sensitive per SN–C–0005C.

3.3.2.4 Material Selection

The total mass loss (TML) for all LVS flight hardware exposed (direct line–of–sight) to the SC, which incorporates organic/polymeric materials, shall not exceed 1.0%, and collected volatile condensible materials (CVCM) shall not exceed 0.1% per ASTM–E 595.

3.3.3 Acoustic and Random Vibration

The fairing acoustic environment internal to the PLF during lift–off and ascent, in conjunction with any random mechanical vibration generated during ascent, shall not exceed the levels shown in Table VII.

3.3.4 Shock

The maximum allowable pyrotechnic induced shock environment at the LV/SC interface shall not exceed the values defined in Figure 19.

Table VII. Maximum PLF Acoustic Levels

1/3 Octave Center Frequency (Hz)	Noise Level (dB) re: 20 uN/M2	1/3 Octave Center Frequency (Hz)	Noise Level (dB) re: 20 uN/M2
25	——	800	124.3
32	129.0	1000	122.5
40	130.5	1250	121.0
50	131.0	1600	119.0
63	132.0	2000	117.5
80	132.5	2500	116.0
100	133.0	3150	114.0
125	133.0	4000	112.5
160	132.7	5000	110.5
200	131.9	6300	108.5
250	131.0	8000	109.7
315	130.2	10000	110.5
400	128.8		
500	127.5		
630	126.1	**Overall**	**142.8**

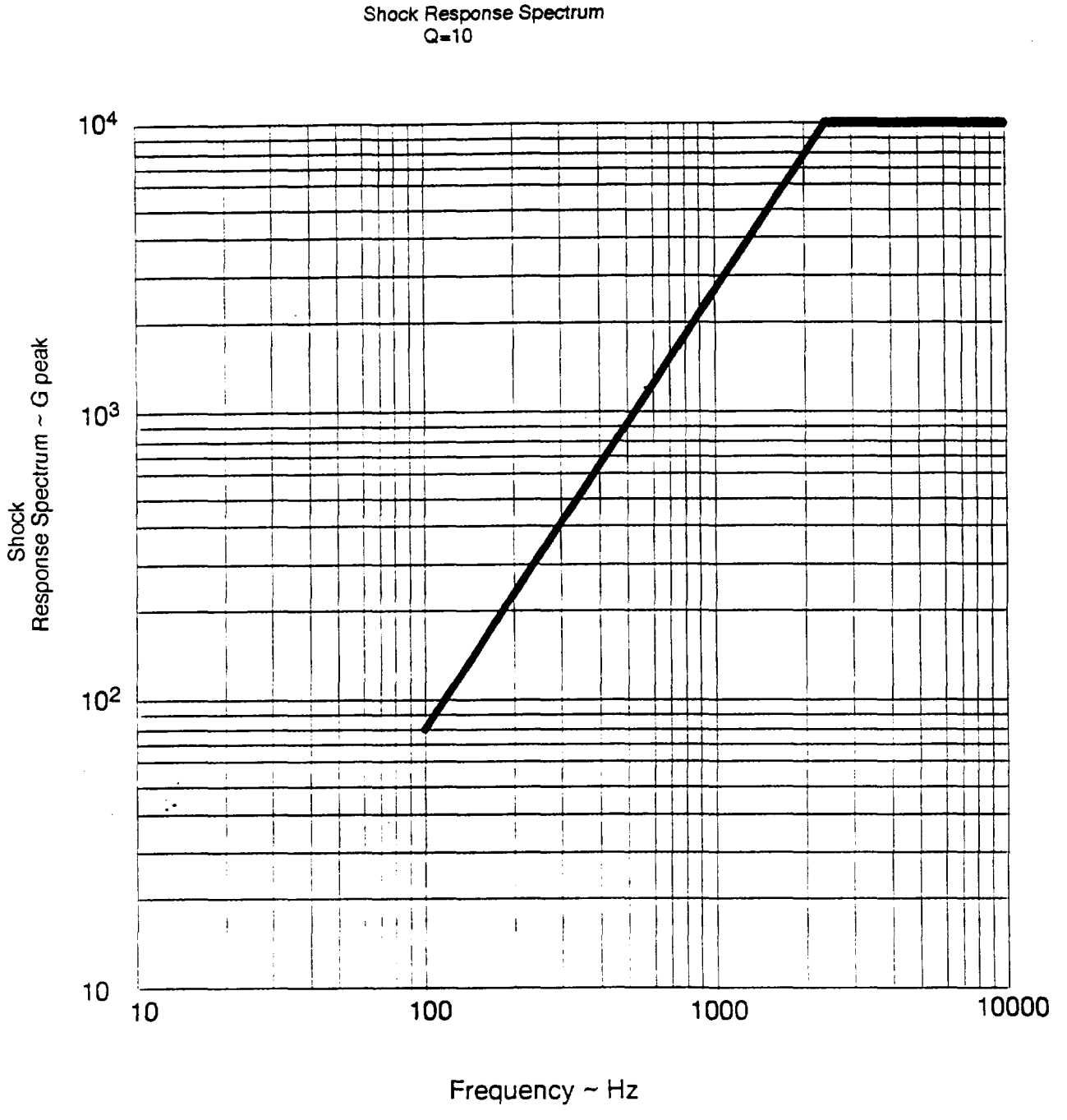

Figure 19. Shock Spectrum

3.3.5 Pressure

3.3.5.1 PLF Pressure Decay

The pressure internal to the PLF when the PLF jettison signal is given shall not exceed 0.1 psf.

3.3.5.2 Rate of Pressure Change

The PLF internal pressure decay rate shall not exceed 0.5 psi/sec except for one perturbation, not exceeding 3 seconds, where the rate shall not exceed 0.76 psi/sec.

3.4 Mission and Performance Interface

3.4.1 Mission Interfaces

The LV shall transport the SC from the launch site to the orbit specified in Table VIII

3.4.1.1 Launch Window

The launch window shall have a minimum duration of 20 minutes. No more than 1 launch window will be scheduled within any 24–hour span and shall be specified at least 60 days prior to launch.

3.4.1.2 Mission Targeting

Targeting analysis and verification shall include trajectory constraints which satisfy range safety requirements for launch window durations and mission requirements. Any areas in which the LV operations may be non–compliant with existing range safety requirements shall be highlighted in the LV proposal.

Table VIII. Mission Interfaces

Orbit Parameters	Nominal	Dispersions
Perigee Radius	6927 km	+5/–0 km
Apogee Radius	7075 km	+0/–10k
Inclination (mean)	98.2 deg	±0.1 deg
Descending Node (local mean solar time)	10:30 a.m.	±15 min
Argument of Perigee	Supplied by LV	±0.5 deg
Mean Anomaly	0	±0.5 deg

*Note: Any LV–unique dispersions greater than these values shall be identified for evaluation.

3.4.2 Performance

3.4.2.1 LV Performance

The LV shall have the performance capability to place a Spacecraft with the maximum separated Spacecraft mass specified in Table IV into the orbit specified in Table VIII with a 3–sigma probability of being within the allowable dispersions specified in Table VIII.

3.4.2.2 Separation Attitude Maneuver

Prior to SC separation, the LV shall perform an attitude maneuver to position the SC in the earth–oriented attitude specified in Table IX.

Table IX. SC Earth–oriented Separation Attitude

SC Coordinate	SC Orientation
+ Y Axis	Negative Orbit Normal
+ Z Axis	Earth Centered
+ X Axis	+Y cross +Z (approx. along velocity vector)

3.4.3 Separation

3.4.3.1 Separation Initiation

The LV shall initiate SC separation once the planned injection orbit has been achieved with the Spacecraft in the proper orientation relative to the earth.

3.4.3.2 Separation Attitude Error

The maximum separation attitude error, from the SC separation attitude, shall include the LV maneuver errors and any attitude errors propagated between completion of the separation attitude maneuver and SC separation initiation. The separation attitude error shall not exceed:

SC Coordinate	Attitude Error
X (Roll)	±5 degree
Y (Pitch)	±10 degree
Z (Yaw)	±10 degree

3.4.3.3 SC Separation Inertial Rate

Maximum allowable SC attitude rates, relative to inertial space, shall not exceed ±0.5 deg/sec per axis.

3.4.3.4 Collision Avoidance

The LV shall ensure that post–separation recontact does not occur between the LV and SC.

3.4.3.5 Separation Velocity

The separation velocity between the LV and SC shall be sufficient to ensure no recontact occurs during the SC coast period (nominally 3½ revolutions).

3.4.3.6 Separation Maneuvers

The separated Launch Vehicle shall not conduct collision avoidance maneuvers in any manner such that residual contaminants may contaminate the SC beyond the levels in Table IV if the SC were to remain in the injection orbit indefinately.

3.4.3.7 Separation Clearance

SC and SCA hardware shall not approach each other to closer than 1.0 inch as a result of relative motion of the SC and LV during SC separation.

3.5 Ground System Interfaces

3.5.1 LV MST/UT Requirements

3.5.1.1 Facility Requirements

3.5.1.1.1 General

An elevator shall be provided to accommodate personnel and equipment up to 4 ft. W x 6 ft. L x 7 ft. H, weighing 4000 lbs. The elevator shall provide access from ground level to all levels along the length of the Spacecraft.

An access control system shall be provided to prevent intrusion by unauthorized personnel into the CE.

Personal lockers and storage for clean room apparel shall be provided at the personnel airlock.

An area shall be provided to change into a SCAPE or a Splash suit. Showers shall be provided for safety use.

3.5.1.1.2 Crane

An overhead crane shall be provided, capable of hoisting the SC and associated equipment (including the PLF if off–pad encapsulation is employed).

The crane shall be shielded to prevent particulates, greases, or other contaminants from falling on the SC.

Qualified crane operators shall be provided to perform all lifting operations involving the MST crane.

3.5.1.1.3 Access

Access platforms shall be spaced at approximately 10 ft. vertical intervals, within the MST, for the length of the SC.

Ramps shall be provided for access to each fairing door and umbilical connection.

3.5.1.1.4 Cleanliness

A class 100,000 Clean Enclosure (CE), capable of being operated at class 10,000 (per FED–STD–209B), shall be provided around the PLF at all levels where access to the Spacecraft is possible.

Equipment and personnel airlocks shall be provided for access to the CE.

Equipment airlock shall accommodate support equipment envelopes up to 4 ft. W x 6 ft. 6 in. L x 7 ft. H.

Clean–room type apparel sufficient to accommodate 20 personnel for 30 days shall be provided.

3.5.1.2 Electrical

3.5.1.2.1 Power Source

Electrical power shall be provided within the CE as described in Table X.

Table X. MST Clean Enclosure Electrical Power Receptacles

Location	120 Volt 1 Phase 20 Amp	208 Volt 3 Phase 90 Amp
Clean Enclosure (SC base level)	12	2
Clean Enclosure (SC 2nd level)	5	0
Clean Enclosure (SC 3rd level)	5	0
Maximum Concurrent Usage	50Amps	50Amps

Quantities are representative

A backup power source shall be provided for the MST.

3.5.1.2.2 Electrical Interfaces

A MST single point ground shall be provided. Ground plates on each level of the CE shall be connected to the single point ground.

Electrical signal interface plates and cables shall be provided to connect the MST and Umbilical Tower (UT) SC interface with the Launch and Service Building (LSB) SC ground equipment interface.

The wires defined in Table II for the electrical interfaces defined in that table, other than the ascent telemetry interface, shall provide until launch a continuous interface with the SC GSE located in the LSB.

3.5.1.2.3 Lighting

The facility shall provide 125 ft–candles illumination on the surfaces of the SC where access is available to permit visual inspection.

3.5.1.3 Liquids

3.5.1.3.1 Quantities

Approx 1600 lb of Hydrazine (N_2H_4) shall be provided per MIL–P–26536C, Amendment 2 (High Purity Grade) for SC use.

Approximately 200 gallons of Isopropyl Alcohol flushing agent shall be provided.

Approximately 200 gallons of deionized water flushing agent shall be provided.

3.5.1.3.2 Ventilation

Interfaces shall be provided that can vent GN2 contaminated with N_2H_4, water, or Iso–Propyl Alcohol (IPA) from the CE to the fuel waste treatment area. The Interfaces shall have 1 1/4 in. KC105 type fittings.

Ventilation shall be provided to exhaust an accidental spill of approximately 1 gallon of anhydrous ammonia.

3.5.1.3.3 Handling

Capability shall be provided to accept and dispose of approximately 1000 gallons of diluted N_2H_4 and approximately 200 gallons of undiluted N_2H_4.

Capability shall be provided to dispose of up to 250 gallons of deionized water and up to 250 gallons of IPA flushing agents contaminated with N_2H_4.

3.5.1.4 Pneumatics

3.5.1.4.1 Types

Type 1, Grade B, GN2 per MIL–P–27401C shall be provided at interfaces on SC levels of the CE for cooling, purge, and pressurization.

GHe at 5000 psi, cleanliness level 100 per MIL–STD–1246A, shall be provided at interfaces in the CE for SC fuel system pressurization.

3.5.1.4.2 Facility Handling Features

Interfaces shall be provided which vent GN2 and GHe from the CE to the external atmosphere.

Breathing air locations with at least four outlets per station shall be provided for the Self Contained Atmosphere Protection Ensemble (SCAPE) System.

3.5.1.5 Environment

3.5.1.5.1 Clean Enclosure (CE) Air Conditioning

The CE air temperature shall be maintained at ±5°F of the set point, at any set point from 55°F to 75°F.

The CE humidity control system shall provide relative humidity controllable within the range of 30% to 50%.

The CE A/C System shall maintain an overall class 5,000 reading per FED–STD–209B for the air at the inlet into the CE.

3.5.1.5.2 Payload Fairing (PLF) Air Conditioning

3.5.1.5.2.1 Assumptions

The PLF AC shall maintain the following environment until launch assuming that the maximum SC dissipation, excluding battery charging, will be less than 985W and that battery dissipation will not exceed 120 W per battery panel during battery charging operations (see Figure 1 for the two battery panel locations.)

3.5.1.5.2.2 Temperature

The PLF A/C system shall deliver sufficient downward airflow to ensure that the temperature of air around the EOS–AM Spacecraft remains within 5°F of the temperature set point.

The PLF AC system shall provide temperatures to within ±5°F of any set point between 40°F and 75°F controlled from the LOB as needed.

The LVIC shall be capable of providing local air conditioning within the PLF to maintain the battery environment at a temperature within 2°F of a pre–determined set point between 40°F – 55°F during battery charging operations.

The local A/C system shall deliver sufficient airflow to ensure that the temperature of air around the batteries remains within 2°F of the temperature set point.

3.5.1.5.2.3 Cleanliness

The PLF A/C systems shall provide inlet air which is HEPA filtered to nominal Class 100, guaranteed Class 5000, per FED–STD–209B.

Continuous monitoring of airborne particulate contamination, temperature, flow rate, and relative humidity of the PLF HVAC system at the PLF air conditioning duct to UT interface shall be provided at the MST.

3.5.1.5.2.4 Humidity

The PLF humidity control system shall provide relative humidity controllable within the range of 30% to 50%.

3.5.1.5.3 Vapor Detection

N_2H_4 propellant and ammonia monitors shall be provided to evaluate the quality of conditioned air in the CE and to automatically shut the individual A/C systems down if toxic vapors are detected. These monitors shall provide readout, audible alarm and visual alarm locally for the PLF and CE A/C systems. Remote readouts and alarms shall be provided in the LOB and LCC.

3.5.1.6 Communications

Two, administrative telephones shall be provided on each SC level of the CE. Each telephone shall have a disconnect ability during hazardous operations. Capability shall be provided for interconnection for dialing to all other Launch Site subscribers plus capability to dial off–base.

A system of unsecure voice operations networks shall be provided on each SC level of the CE, which can be interfaced to existing Launch Site voice systems and off–base lines. Communications interfaces adjacent to all breathing air system interfaces shall be compatible with a 1208–Q–075, or equivalent, communication panel.

SC level access shall be provided to the paging and area warning systems for the CE and the Pad Deck.

3.5.2 Launch Operations Building (LOB) Requirements

3.5.2.1 Facilities

Any standard accommodations normally provided in the LOB for use by SC personnel shall be provided to EOS–AM personnel during prelaunch and launch activities.

3.5.2.2 Deluge System

Remote, two step control (enable/operate) of the CE SC level deluge system shall be provided in the LOB. A key operated, override capability of the SC level inhibit shall be provided in the LOB.

3.5.2.3 Environmental System Monitoring and Control

Monitoring and alarming capability shall be provided in the LOB for the CE and PLF A/C N_2H_4 and ammonia vapor detection systems. Audible and visual alarms shall be placed in groupings related to the parameter being monitored. (e.g., hazardous vapor related alarms shall be collocated)

Remote manual and automatic shutdown of the CE A/C air flow and PLF A/C system shall be provided in the LOB.

3.5.2.4 Communications

3.5.2.4.1 Two–way

Two business telephone services shall be provided into the LOB for SC personnel use. Each service shall be terminated in a RJ–45S jack.

Two administrative telephones shall be provided in the LOB for SC personnel use. Each telephone shall have push–to–talk protection. Capability shall be provided for interconnection by dialing to all other Launch Site subscribers and for dialing off–base.

3.5.2.4.2 One–way

An operational voice system shall be provided for SC personnel in the LOB, with the ability to support 2 networks for 2 personnel. An interface shall be provided to existing Launch Site voice systems and off–base lines.

Access shall be provided to the paging and area warning systems for the LOB.

3.5.3 Launch And Service Building (LSB) Requirements

3.5.3.1 Facilities

Facilities shall be provided in the LSB for use by SC personnel during prelaunch and launch activities.

A 20 ft. x 20 ft. support area shall be provided in the LSB for SC electrical support equipment. Cable access to the UT shall be provided.

A storage area for N_2H_4 fuel and fueling equipment shall be provided in the LSB for SC use.

3.5.3.2 Electrical

Electrical power shall be provided in the LSB for SC electrical support equipment as described in Table XI.

Grounding plates connecting to a single–point facility ground shall be provided in the LSB for SC electrical support equipment.

Table XI. LSB Electrical Power Receptacles

Location	120 Volt 1 Phase 20 Amp	208 Volt 3 Phase 100 Amp
SC electrical support equip. area SC fuel storage area	5 0	2 0
Maximum Concurrent Usage	50Amps	180Amps

Quantities are representative

An LSB payload interface panel, which connects to the MST umbilical junction box, shall be located adjacent to the SC electrical support equipment in the LSB.

3.5.3.3 Liquids/Gases

The capability shall be provided to contain and dispose of a major spill of N_2H_4 in the LSB fuel storage area.

GN2 driven aspirators shall be provided to assist in cleaning up minor fuel spills in the LSB fuel storage area.

Breathing air support shall be provided for 2 SCAPE suits in the LSB fuel storage area. The interface characteristics shall be the same as the MST and CE interfaces.

A group of at least 4 individual breathing air interfaces for Splash System shall be provided to support operations in the fuel storage area.

An N_2H_4 vapor sensing and alarm system shall be provided for LSB fuel storage area with Local LSB Readout and Remote readout in the LOB.

3.5.3.4 Communication

One administrative telephone shall be provided in LSB SC electrical support equipment area. Capability shall be provided for interconnection by dialing to all other Launch Site subscribers and for dialing off–base.

One administrative telephone shall be provided in the LSB fuel storage area. Capability shall be provided for interconnection by dialing to all other Launch Site subscribers and for dialing off–base.

Three communications links capable of transmitting 1.5 Mbps shall be provided for telemetry, commands, and control signals between the LSB SC electrical support equipment and the Spacecraft Checkout Station Area at NASA Building 836.

Access to the paging and area warning systems shall be provided in the SC electrical support equipment and fuel storage areas.

3.5.4 Building 8510 (or Equivalent) Launch Control Center (LCC) Requirements

3.5.4.1 Facilities

Facilities shall be provided in the Building 8510 (or equivalent) Launch Control Center (LCC) for use by SC personnel during prelaunch and launch activities.

3.5.4.2 Deluge System

Remote, two step control (enable/operate) of CE SC level deluge system shall be provided in the LCC. A key operated, override capability of the SC level inhibit shall be provided in the LCC.

3.5.4.3 Environmental System Monitoring and Control

3.5.4.3.1 Monitoring

Monitoring and alarming capability shall be provided in the LCC for the CE and PLF N_2H_4 and ammonia vapor detection systems. Audible and visual alarms shall be provided in like–type groupings.

3.5.4.3.2 Control

Remote manual and automatic shutdown of the CE A/C air flow and PLF A/C system shall be provided in the LCC.

3.5.4.4 Communications

Two administrative telephones shall be provided in the LCC for SC personnel use. Each telephone shall have push–to–talk protection. Capability shall be provided for interconnection by dialing to all other Launch Site subscribers and for dialing off–base.

An operational voice system shall be provided for the LCC with the ability to support two networks for two SC personnel. An interface shall be provided to existing Launch Site voice systems and off–base lines.

3.5.5 Building 7000 (or equivalent) Requirements

Facilities of the Building 7000 Launch Operations and Control Center (LOCC) will be provided for EOS–AM Spacecraft Program Management personnel during launch operations. Real–time decisions affecting the launch operation will culminate at this location.

3.5.6 Vandenberg Telemetry Receiver Site Requirements

The VTRS will receive combined launch vehicle and Spacecraft data during the launch ascent.

The VTRS will remove the Spacecraft data from the combined data stream, and forward the Spacecraft data to the SCS in real–time.

3.5.7 Vandenberg Communications Center Requirements

Three 5 Kbps full–duplex digital transmission links from the SCS Area to the base communications center will be provided for connection with the GSFC EOS Control Center.

Three communications links capable of transmitting 1.5 Mbps will be provided for telemetry and commands between the Launch and Service Building and the Spacecraft Checkout Station Area.

A communications link capable of transmitting >10 Mbps (ethernet) will be provided for telemetry and commands between the Spacecraft Test Area at the Spacecraft processing facility and the Spacecraft Checkout Station Area at Building 83.

Three 5 kbps full–duplex digital transmission links from the Spacecraft Test Area at the Spacecraft processing facility shall be provided for connection with the GSFC EOS Operations Center.

One communications link capable of transmitting 1.5 Mbps shall be provided for Spacecraft telemetry from the Vandenberg Telemetry Receiver Site to the SCS Area at building 83.

3.5.8 Transportation Requirements

Transport of the SC shall be provided by the LVC. If off–pad payload fairing encapsulation is employed, transport will be required from the encapsulation facility to the LV MST. If the SC is encapsulated at the pad, transport will be required from the SC processing facility to the LV MST.

3.5.8.1 Transporter General Requirements

3.5.8.1.1 Functions

The Transporter shall be capable of moving without damage the SC (encapsulated or unencapsulated per 3.5.8) at 5 mph (max.) on paved roads.

The Transporter shall include an Environmental Control System, Electrical Power System, Monitor, Alarm, and Environmental Recording System.

3.5.8.1.2 Transporter Strength

The Transporter shall support (SC + adapter (+ fairing if applicable)) lbs. with a factor of safety of 1.5 applied against material Ultimate Tensile Strength and 1.15 against Yield Strength.

The transporter with the SC shall withstand wind velocity loads from 5 mph ground speed coupled with 30 mph winds with gusts to 0 mph.

3.5.8.1.3 Spacecraft Vibration and Shock Accommodations

The transporter shall be equipped to measure the Spacecraft vibration and shock levels experienced during transport to ensure they do not exceed the Spacecraft design levels.

Vibration producing components of the transporter shall be isolated to prevent adverse effects on the SC.

3.5.8.2 Transporter Environmental Control System (ECS)

The ECS shall provide a continuously controlled environment inside the fairing for temperature, humidity, positive pressure differential, and cleanliness as defined below.

3.5.8.2.1 Temperature

The ECS shall maintain temperature within the PLF at ±5 deg. F of the set point, at any set point from 55°F to 75°F.

3.5.8.2.2 Humidity

The ECS humidity control system shall maintain 30% to 50% relative humidity within the PLF.

3.5.8.2.3 Pressure

The ECS shall maintain a minimum positive pressure of 2 in of water above ambient within the PLF.

3.5.8.2.4 Cleanliness

The ECS air conditioning system shall maintain a minimum of cleanliness class 5,000 at the inlets to the PLF, per FED–STD–209B.

4 ABBREVIATIONS AND ACRONYMS

AC	Air Conditioning
AF	Air Force
AGE	Aerospace Ground Equipment
ARIA	Advanced Range Instrumentation Aircraft
BTU	British Thermal Unit
C	Centigrad
C&DH	Command and Data Handling (Subsystem of SC)
CG	Center of Gravity
CE	Clean Enclosure
CMD	Command
CP	Control Panel
dB	Decibel
deg	Degree
EED	Electroexplosive Device
EMC	Electromagnetic Compatibility
EMI	Electromagnetic Interference
EOS–AM	Earth Observing System – AM mission
F	Fahrenheit
FMH	Free Molecular Heating
fpm	Feet per minute
FSE	Flight Support Equipment
ft	Feet
FTS	Flight Termination System
FV	Flight Vehicle System
GHe	Gaseous Helium

GHz	Giga Hertz
GN_2	Gaseous Nitrogen
GSE	Ground Support Equipment
GSFC	NASA Goddard Space Flight Center
Hz	Hertz
ICD	Interface Control Document
ISDS	Inadvertent Separation Destruct System
KBPS	Kilobits per Second
Kg	Kilogram
lb	Pound
LC	Launch Complex
LeRC	NASA Lewis Research Center
LOB	Launch Operations Building
LSB	Launch and Services Building
LSE	Launch Support Equipment
LV	Launch Vehicle
LVIC	Launch Vehicle Interface Contractor
LVS	Launch Vehicle System
min	Minute
MLI	Multilayer Insulation
MMC	Martin Marietta Corporation
MST	Mobile Service Tower
nmi	Nautical Mile
NVR	Nonvolatile Residue
N_2H_4	Hydrazine
PLF	Payload Fairing
PM	Propulsion Module

RF	Radio Frequency
sec	Second
SIG	Signal
STA	Station
STD	Standard
SC	Spacecraft
SCA	Spacecraft Adapter
SCS	Spacecraft System
TLM	Telemetry
T–0	T–Minus–Zero (Time–to–launch)
UT	Umbilical Tower
VAB	Vehicle Assembly Building
V/m	Volts per Meter
WTR	Western Test Range
WSMC	Western Space and Missile Center

IS20008504
CAGE No. 49671
31 March 1993

Radio Frequency Interface Control Document Between the EOS–AM Spacecraft and the Spaceflight Tracking and Data Network (ICD–104)

Prepared under:
Contract NAS5–32500
NASA Goddard Space Flight Center
Greenbelt, Maryland 20771

Prepared by:
General Electric Company
Astro–Space Division
P.O. Box 800
Princeton, New Jersey 08543–0800

DCC033193

(This page intentionally left blank.)

Radio Frequency Interface Control Document Between the EOS–AM Spacecraft and the Spaceflight Tracking And Data Network (DR No. ICD–104)

Approval for MO&DSD

Technical Concurrence:
Yen F. Wong
Network Systems Engineer

Coordinated by:
Robert L. Stelmaszek
Network Technical & Operations Manager

Approved by:
Angelita C. Kelly
EOS Mission Operations Manager

Approved by:
Gene A. Smith
Data Systems Manager

Approved by:
Daniel A. Spintman
Networks Division Chief

Approval for AM Project

Diep Nguyen
EOS–AM Communications Engineer

Edward Rothe
EOS–AM C&DH Engineer

Edward Chang
EOS–AM Operations Manager

Richard Ho
EOS Observatory Manager

Chris Scolese
EOS–AM Project Manager

Prepared by:
General Electric Company
Astro–Space Division
P.O. Box 800
Princeton, New Jersey 08543–0800

(This page intentionally left blank.)

REVISION LOG

This log identifies those portions of this document which have been revised since the original issue. Revised portions of each page, for the current revision only, are identified by marginal striping.

Revision	Paragraph Number(s) Affected	Rev. Date	Approval
Initial Issue		03/31/93	CM/GR

(This page intentionally left blank.)

TABLE OF CONTENTS

SECTION / PARAGRAPH	TITLE	PAGE
1	SCOPE	1
1.1	Purpose	1
1.2	Interface Responsibilities	1
1.3	Interface Identification	1
2	DOCUMENTS	3
2.1	Applicable Documents	3
2.2	Reference Documents	3
2.3	Other Related Documents	3
3	COMMUNICATIONS AND TRACKING INTERFACE REQUIREMENTS	5
3.1	General	5
3.1.1	Interface RF Links	5
3.1.2	Interface Functional Capabilities	5
3.2	Interface Functional Requirements	5
3.2.1	Spacecraft-TDRS S-band Links	5
3.2.1.1	Commands	6
3.2.1.2	Telemetry	6
3.2.1.3	Ranging	6
3.2.1.4	Doppler Tracking	6
3.2.1.5	TDRSS Onboard Navigation System (TONS) Support	7
3.2.2	Spacecraft-TDRS Ku-band Links	7
3.2.2.1	Telemetry	7
3.2.2.2	Ranging	7
3.2.2.3	Doppler Tracking	7
3.2.3	Spacecraft to GN S-band Link	7
3.2.3.1	Commands	7
3.2.3.2	Telemetry	8
3.2.3.3	Ranging	8

TABLE OF CONTENTS (Continued)

SECTION / PARAGRAPH	TITLE	PAGE
3.2.3.4	Doppler Tracking	8
3.3	Communications Performance Characteristics	8
3.3.1	General	8
3.3.1.1	RF Link Performance Requirements	8
3.3.1.2	User Constraints	8
3.3.2	Command Channel	8
3.3.3	Telemetry Channel	9
3.3.4	Science Data	9
3.3.5	Ranging	9
3.3.6	Doppler Tracking	9
3.4	Spacecraft/TDRSS/GN Communication Link Modes	9
4	LINK INTERFACE CHARACTERISTICS	13
4.1	Purpose	13
4.2	Link Functional Designs	13
4.2.1	TDRS to Spacecraft S-band, MA, Forward Link	13
4.2.1.1	General	13
4.2.1.2	Link Type	13
4.2.1.3	Signal Characteristics	15
4.2.2	Spacecraft to TDRS S-band MA Return Link	15
4.2.2.1	General	15
4.2.2.2	Link Type	15
4.2.2.3	Functional Design	15
4.2.3	TDRSS to Spacecraft S-band SSA Forward Link	18
4.2.3.1	General	18
4.2.3.2	Functional Design	18
4.2.4	Spacecraft to TDRSS S-band SSA Return Link	20
4.2.4.1	General	20
4.2.4.2	Link Type	21
4.2.5	Spacecraft to TDRSS Ku-band, KSA, Return Service	21

TABLE OF CONTENTS (Continued)

SECTION / PARAGRAPH	TITLE	PAGE
4.2.5.1	General	21
4.2.5.2	Functional Design	21
4.2.5.3	Link Description	23
4.3	Baseband Signal Description	23
4.3.1	Purpose	23
4.3.2	Command Data Frame Format	24
4.3.2.1	S-band Command Format	24
4.3.3	Command Encoding/Decoding	24
4.3.3.1	S-band	24
4.3.4	Forward Link/TDM Data Format	24
4.3.5	Forward Link Baseband Signal Parameters	24
4.3.6	S-band Data Frame Format	27
4.3.7	Ku-band Data Frame Format	27
4.3.8	Return Link TDM Frame Format	27
4.3.9	Channel Convolutional Encoding/Viterbi Decoding	27
4.3.9.1	General	27
4.3.9.2	Convolutional Code	27
4.3.9.3	Viterbi Decoding	27
4.3.10	Reed-Solomon Outer Coding	30
4.3.11	Channel Interleaving/Deinterleaving	30
4.3.11.1	General	30
4.3.11.2	Periodic Convolutional Interleaving	30
4.3.11.3	Periodic Convolutional Deinterleaving	30
4.3.11.4	Synchronization	30
4.3.11.5	Separation	33
4.3.12	Return Link Baseband Data Signal Parameters	33
4.3.13	Data and Symbol Signal Formats	33
4.4	RF Characteristics	33
4.4.1	Spacecraft Signal Processing	33
4.4.1.1	General	33

TABLE OF CONTENTS (Continued)

SECTION / PARAGRAPH	TITLE	PAGE
4.4.1.2	Carrier Modulation/Demodulation	33
4.4.1.3	Spread Spectrum	38
4.4.1.4	Signal Acquisition and Tracking	43
4.4.1.5	Doppler Tracking/Compensation	45
4.4.2	TDRS RF Signal Characteristics	46
4.4.2.1	TDRS Forward Link RF Signal Characteristics	46
4.4.2.2	TDRS Return Link RF Signal Characteristics	46
4.4.2.3	Frequency Stability	46
4.4.2.4	Antenna Acquisition and Tracking	53
4.5	Interface Characteristics Summary	53
4.5.1	Link Configuration Characteristics	53
4.5.2	Predicted Performance Degradation Due to Partial Compliance with User Constraints	56
4.5.3	Predicted Performance Degradation Due to Pulsed RFI	56
5	Ground Network (GN)	57
5.1	GN Utilization	57
5.2	Functional Interface Utilization	57
5.3	Interface Performance Definition.	57
5.4	Interface Characteristics	57
5.4.1	General	57
5.4.1.1	Interface Design	58
5.4.2	Link Functional Designs and System Constraints	58
5.4.2.1	General	58
5.4.2.2	Uplink Characteristics; GN	59
5.4.2.3	Downlink Characteristics; GN	59
5.4.3	Baseband Signal Characteristics	61
5.4.3.1	General	61
5.4.3.2	Command Baseband Signal Characteristics	61
5.4.3.3	Telemetry Baseband Signal Characteristics	63
5.4.3.4	Telemetry Formats	63

TABLE OF CONTENTS (Continued)

SECTION / PARAGRAPH	TITLE	PAGE
5.4.3.5	Ranging Baseband Signal	63
5.4.4	Transponder Acquisition and Tracking Characteristics	63
5.4.4.1	Uplink	63
5.4.4.2	Downlink	64
5.4.5	Frequency Stability	64
5.4.5.1	Receiver Center Frequency Stability	64
6	NOTES	65
6.1	Abbreviations and Acronyms	65

APPENDIX I

10	SPACECRAFT COMMAND AND TELEMETRY LINK CALCULATIONS	69

LIST OF FIGURES

FIGURE	TITLE	PAGE
1	Spacecraft Communication Links	2
2	TDRS-to-Spacecraft MA and SSA Forward Link Configuration	14
3	Spacecraft-to-TDRS MA and SSA Return Link Configuration	17
4	Spacecraft-to-TDRSS KSA Return Link Configuration	22
5	S-band Command Format	25
6	Modified BCH Code Generator - S-band Command Link	26
7	Channel Access Data Unit (Sync + Coded Virtual Channel Data Unit)	28
8	Channel Access Data Unit (Sync + Coded Virtual Channel Data Unit)	29
9	Convolutional Encoder Functional Configuration (V = 2, K = 7)	31
10	(30,116) Periodic Convolutional Interleaving	32
11	Digital Data Signal Formats	34
12	Forward Link Modulation Functional Configuration (SMA/SSA)	35
13	DGI Return Link Modulation Functional Configuration	37
14	DG2 - Ku-band Return Link Modulation Functional Configuration	39
15	Command Channel PN Code Generator Functional Configuration	40
16	Range Channel PN Code Generator Functional Configuration	41
17	Mode 1 and 3 Return Link PN Code Generator Functional Configuration	42
18	Mode 2 Return Link PN Code Generator Functional Configuration	44
19	GN-to-Spacecraft Uplink Configuration	60
20	Spacecraft-to-GN S-band Downlink Configuration	62

LIST OF TABLES

TABLE	TITLE	PAGE
I	Spacecraft Command Modes	10
II	Spacecraft Telemetry and Tracking Modes	11
III	S-band Forward Link Signal Parameters from TDRS to Spacecraft	16
IV	S-band Return Link Signal Parameters from Spacecraft to TDRSS	19
V	Ku-band Return Signal Parameters	23
VI	Forward Link Baseband and RF Signal Characteristics	47
VII	Return Link Baseband and RF Signal Parameter Requirements (User Constraints)	48
VIII	TDRSS-to-Spacecraft Forward Link Interface Characteristics	54
IX	Spacecraft-to-TDRSS Return Link Interface Characteristics	55
X	S-band Link Channel Constraint Loss	56
XI	Predicted Performance Degradation Due to Pulse RFI	56
XII	GN-to-Spacecraft S-band Interface Characteristics	58
XIII	Spacecraft-to-GN S-band Downlink Interface Characteristics	58

TBD LOG

ITEM	SECTION	PAGE	SUBJECT	RESP.	DUE
TBD–1	3.1.2	5	End–to–End Testing capabilities	NASA	CDR
TBD–2	3.1.2	5	Prelaunch capabilities	NASA	CDR
TBD–3	3.3.5	9	Instrument contributions to range error.	GE	CDR
TBD–4	4.3.7	27	BER measurement point	NASA	CDR
TBD–5	5.4.3.4	63	Transmission from GN to EDOS	NASA	CDR

TBR LOG

ITEM	SECTION	PAGE	SUBJECT	RESP.	DUE
TBR–1	5.4.3.2	61	NASCOM data block	NASA	CDR

PREFACE

The EOS–AM Spacecraft Radio Frequency (RF) Interface Control Document (ICD) defines all communication and tracking links between the EOS AM Spacecraft and the Spaceflight Tracking and Data Network (STDN). It controls the technical aspects of the Radio Frequency communication system interfaces between the EOS Spacecraft project office and the Network Division.

For the remainder of this document, the EOS–AM Spacecraft will be referred to simply as the Spacecraft.

This document will be under the Configuration Management of the Network Division (ND) Configuration Control Board (CCB).

Proposed changes to this document should be submitted to the ND CCB along with supportive material justifying the proposed change.

A document change notice (DCN) will be issued to update the document for any approved changes.

Direct all questions and comments concerning this document to:

Network Systems Engineer for the EOS AM Spacecraft
Code 531.1
NASA/GSFC
Greenbelt, MD 20771

(This page intentionally left blank.)

1 SCOPE

1.1 Purpose

This ICD (Interface Control Document) establishes performance requirements and defines and controls technical aspects of the Radio Frequency (RF) communications and tracking system interfaces between the EOS–AM Spacecraft and the NASA Spaceflight Tracking and Data Network (STDN), including the Tracking and Data Relay Satellite System (TDRSS) and the Ground Network (GN) (Merrit Island Launch Area, MILA, and Bermuda, BDA). The communications interfaces defined herein are also applicable to the Tracking and Data Relay Satellites (TDRS) and the Compatibility Test Van (CTV).

1.2 Interface Responsibilities

The Spacecraft/STDN interface responsibilities are defined in terms of the Goddard Space Flight Center (GSFC) EOS–AM Spacecraft Project Office and the Mission Operations and Data Systems Directorate (MO&DSD) respectively. The portion identified as the Spacecraft is the responsibility of the GSFC EOS–AM Spacecraft Project Office. The portion identified as STDN is the responsibility of the GSFC MO&DSD. Design requirements and parameters in this ICD are subject to the bilateral control of the GSFC EOS–AM Spacecraft Project Office and the GSFC MO&DSD, as appropriate. The GSFC Systems Manager of the EOS–AM Spacecraft Project and the Designee of the GSFC MO&DSD will jointly approve the ICD upon resolution of issues and discrepancies as agreed upon by both parties. The Network Division will manage and control this ICD on behalf of the MO&DSD.

1.3 Interface Identification

The communications interfaces defined and controlled by this ICD are the RF transmission links between the Spacecraft and the STDN, as defined in Sections 3 and 4. This ICD does not apply to the RF links of any other spacecraft/vehicle, tracking system or dedicated ground terminal. Figure 1 depicts the RF links between the Spacecraft and its various interfaces.

The RF link calculations contained in Appendix I for the Spacecraft modes of operation are included only as supporting data and do not constitute part of the RF ICD agreement.

The RF interfaces between the EOS–AM Spacecraft and the WPS is included in a separate ICD, the Radio Frequency Interface Control Document Between the EOS–AM Spacecraft and the Wallops Island Station (WPS). The RF interfaces between the EOS–AM Spacecraft and the WPS are assumed to be the same as between the EOS–AM Spacecraft and the GN.

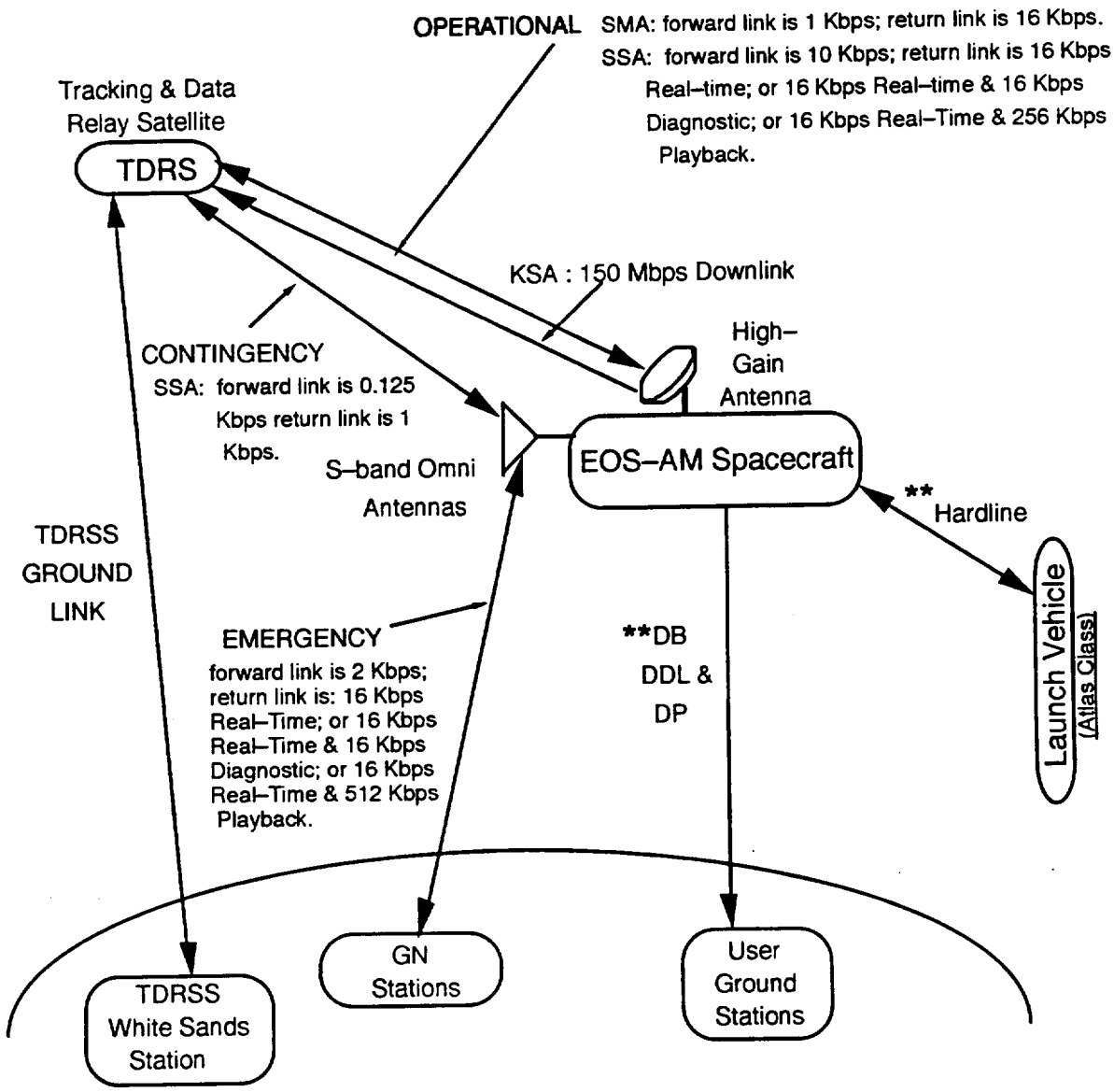

**: Shown for information purposes only, not a part of this ICD.

Figure 1. Spacecraft Communication Links

2 DOCUMENTS

2.1 Applicable Documents

The following documents are applicable to the EOS–AM Spacecraft. In the event of conflict between this ICD and the documents listed below, the documents below shall govern.

GSFC–410–10–01 October 1992	Requirements Document for the EOS–AM Spacecraft

2.2 Reference Documents

The following documents are reference documents applicable to the RF interface being controlled. These documents do not form a part of this ICD and are not controlled by their reference herein. In the event of a conflict between this ICD and documents listed below, the ICD shall govern.

STDN No. 101.2, Rev. 6 Sept. 1988	Space Network (SN) User's Guide
STDN No. 101.3, Rev. 1 Feb. 1984	Spaceflight Tracking and Data Network User's Guide (GSTDN)
STDN No. 108 Dec. 1976	PN Codes for Use with the Tracking and Data Relay Satellite System (TDRSS)
STDN 101.6 Jan. 1979	Portable Simulation System (PSS) and Simulation and Operations Center (SOC) Guide for SN/GN Users
STDN 408 June 1986	TDRSS and GSTDN Compatibility Test Van Functional Description Capabilities

2.3 Other Related Documents

The following documents are listed for the convenience of the user. These documents do not form a part of this ICD and are not controlled by their reference herein. In the event of a conflict between this ICD and the documents listed, the ICD shall govern.

GE PS20005396 31 March 1993	EOS–AM Spacecraft Contract End Item Specification
GE PS20008580 27 July 1992	EOS–AM Spacecraft Communications Subsystem Specification
GE PS20008567 October 1992	EOS–AM Spacecraft Command and Data Handling Subsystem Specification

GE PS20008584 Nov. 1992	Critical Item Development Specification, EOS–AM Spacecraft S–band Transponder (SP–402) (Preliminary)
GE PS20008543 Sept. 1992	Critical Item Development Specification, EOS Master Oscillator (MO) (Preliminary)
Source:	GE Astro–Space Division P.O. Box 800 Princeton, NJ 08543–0800
CCSDS 201.0–B–1 Jan. 1987	Recommendations for Telecommand, Part 1, Channel Service
CCSDS 202.0–B–1 Jan. 1987	Recommendations for Telecommand, Part 2 Data Routing Service
CCSDS 203.0–B–1 Jan. 1987	Recommendations for Telecommand, Part 3 Data Management Service
CCSDS 301.0–B–1 Jan. 1987	Recommendations for Time Code Formats
CCSDS 700.0–G–2 Oct. 1989	Recommendations for Advanced Orbiting Systems, Networks and Data Links: Summary of Concept, Rationale and Performance
CCSDS 701.00–B–1 Issue 1, Oct. 1989	Recommendations for Advanced Orbiting Systems, Networks and Data Links
Source:	CCSDS Secretariat Communications and Data Systems Div. (Code–TS) National Aeronautics and Space Administration Washington, DC 20546

3 COMMUNICATIONS AND TRACKING INTERFACE REQUIREMENTS

3.1 General

3.1.1 Interface RF Links

This section specifies the required RF communication link requirements for the following interface RF links:

a. TDRS-to-Spacecraft S-band Forward Links

b. Spacecraft-to-TDRS S-band Return Links

c. Spacecraft-to-TDRS Ku-band Return Link

d. GN-to-Spacecraft S-band Uplink

e. Spacecraft-to-GN S–band Downlink

3.1.2 Interface Functional Capabilities

The RF communications interface functional and performance capabilities must be provided as specified during the following project phases:

a. RF Compatibility testing

b. End–to–End testing – **(TBD–1)**.

c. Prelaunch - (Provided through the "T–minus–zero", T–0, umbilical, **(TBD–2)**)

d. Orbit Acquisition Initialization and Orbit Acquisition – S–band communication links via the omni antennas.

e. Operational Initialization Phase – Full Ku–band and S–band capability.

f. Operational Phase – Full Ku–band and S–band capability.

g. End–of–Mission Phase – S–band communication links via omni antennas.

3.2 Interface Functional Requirements

3.2.1 Spacecraft-TDRS S-band Links

Spacecraft-TDRSS S–band links provide the following functional capabilities when line-of-sight exists.

Note: TDRS will commit to support whenever the spacecraft look angle to TDRS is >1.5 degrees above the Earth tangential. TDRSS may acquire earlier and collect telemetry prior to the 1.5 degree criteria, but the data may contain dropouts due to atmospheric effects.

The Spacecraft antenna complement consists of a directional High Gain Antenna (HGA) and a pair of omni antennas (omnis). The HGA is a 4.5 ft diameter, two-axis, gimbal driven, parabolic antenna. It operates at both S-band and Ku-band. The omni antennas are configured to give S-band spherical coverage, of at least 70 percent, for deployment, orbit insertion, and emergency operations using TDRS-SSA or GN service.

3.2.1.1 Commands

The TDRSS shall provide for the transmission of digital command data to the Spacecraft using the S-band MA or SSA forward link service. Spacecraft command links and data rates are as follows:

a. 10000 bps: SSA service via the HGA forward link signal path.

b. 1000 bps: MA service via the HGA forward link signal path.

c. 125 bps: SSA service via the omni forward link signal path.

3.2.1.2 Telemetry

Digital telemetry data is transmitted from Spacecraft to TDRSS via either SSA or MA return link service. Spacecraft telemetry links and data rates are as follows:

a. 272 kbps: SSA service via the HGA return link signal path (16 kbps real–time and 256 kbps housekeeping playback).

b. 32 kbps: SSA service via the HGA return link signal path (16 kbps real–time housekeeping and 16 kbps diagnostic data).

c. 16 kbps: SSA service via the HGA return link signal path (16 kbps real–time housekeeping).

d. 16 kbps: MA service via the HGA return link signal path (16 kbps real–time housekeeping or 16 kbps diagnostic data).

e. 1 kbps: SSA service via the HGA or omni return link signal path (1 kbps real–time housekeeping or 1 kbps diagnostic).

3.2.1.3 Ranging

The TDRSS shall provide for the transmission of the range channel pseudo-random noise (PN) code to the Spacecraft. The Spacecraft shall perform coherent regeneration of the range channel PN code and shall transmit this code to the TDRSS.

3.2.1.4 Doppler Tracking

The TDRSS shall generate two-way Doppler (i.e., range rate) tracking that is derived from the Spacecraft to TDRSS S-band RF carrier which is a coherent turnaround of the TDRSS to Spacecraft RF carrier.

3.2.1.5 TDRSS Onboard Navigation System (TONS) Support

The EOS–AM S–band transponder will include the capability to extract one way forward link Doppler measurements for the purposes of onboard navigation. In this mode, the transponder frequency reference will be an external Master Oscillator (MO) whose characteristics are stated in Section 4.4.2.3.2.2. All timing associated with the Doppler measurement will be derived from the external MO.

3.2.2 Spacecraft-TDRS Ku-band Links

The Spacecraft-TDRS Ku-band links provide the following functional capabilities, when line-of-sight exists.

3.2.2.1 Telemetry

Digital telemetry data is transmitted from Spacecraft to TDRSS via KSA return link service. Spacecraft telemetry links and data rates are as follows:

150 Mbps: KSA service via the HGA return link signal path (150 Mbps of real–time science or 150 Mbps of science playback, or 75 Mbps of science playback and 75 Mbps of real–time science).

3.2.2.2 Ranging

Not applicable.

3.2.2.3 Doppler Tracking

Not applicable.

3.2.3 Spacecraft to GN S-band Link

During interruption of TDRSS support, Spacecraft RF communication links are provided by the GN through the use of the GN link mode. Support is dependent upon favorable radio line-of-sight conditions and when GN antenna elevation angle is greater than 5 degrees (above the local mask). The Spacecraft will not transmit telemetry to the GN unless commanded to do so. The EOS–AM Spacecraft will have two transponders that are always operating in receive mode. The receivers in the transponders simultaneously search for TDRSS PN code correlation and STDN CW signal greater than the detection threshold. Upon acquisition of one signal type, the other mode will be inhibited until loss of the initial signal and subsequent return to search mode occurs. The following emergency services are available for GN support to the Spacecraft mission through S–band Up and Downlink.

3.2.3.1 Commands

Transmission from GN to Spacecraft of command data is formatted in accordance with Spacecraft requirements outlined in Paragraph 4.3. The Spacecraft uplink command data rate is 2 kbps.

3.2.3.2 Telemetry

Transmission from the Spacecraft to GN of digital telemetry data will include real-time, on-board Spacecraft Control Computer (SCC) memory dump, and recorded engineering (telemetry) data types. The data rates are as follows:

a. 512 kbps: Recorded engineering playback using the omni antennas.

b. 16 kbps: Real time telemetry using the omni antennas.

c. 16 kbps: SCC computer dump data using the omni antennas.

3.2.3.3 Ranging

N/A

3.2.3.4 Doppler Tracking

The GN can generate one way and two–way tracking data using the downlink S–band RF carrier from the Spacecraft. For two–way doppler tracking, the downlink carrier will be coherently related by the Spacecraft transponder to the uplink carrier. The transmit carrier frequency will be related to the received carrier frequency in the ratio of 240/221. For one–way doppler tracking, the downlink carrier will be derived within the Spacecraft via a Master Oscillator to provide a fixed frequency at approximately 240/221 times the receiver assigned center frequency.

3.3 Communications Performance Characteristics

3.3.1 General

3.3.1.1 RF Link Performance Requirements

RF link performance requirements for each communications functional capability described in Paragraph 3.2 are defined in this section. TDRSS communications performance requirements are based on the presumption that the Spacecraft and TDRSS each perform in accordance with the respective systems performance parameters defined in Section 4. TDRSS return link performance is also predicated on the quality of Spacecraft transmit characteristics as measured against the user constraints defined in Section 4.

3.3.1.2 User Constraints

Failure to meet the user constraints results in performance degradation and this is delineated in Section 4. Additional Effective Isotropic Radiated Power (EIRP) may be required to compensate for performance degradation due to failure to meet user constraints. Constraint loss is tabulated by link in Table X (see Paragraph 4.5.2).

3.3.2 Command Channel

The maximum forward link information bit error rate (BER) for the detected digital data in this Spacecraft command channel shall be 10^{-5}, referenced to the output of the command decoder. This assumes that the forward link signal meets all the requirements of Paragraph 4.4.2.1.

3.3.3 Telemetry Channel

The maximum return link information bit error rate (BER) for the detected digital data in the telemetry channel shall be 10^{-5}, referenced to the output of the command decoder.

3.3.4 Science Data

The maximum return link information bit error rate (BER) for the digital science data (KSA link only) shall be 10^{-5}, referenced to the output of the command decoder.

3.3.5 Ranging

The systematic range error (that portion due to equipment inaccuracies) contributions from TDRSS shall be ± 35 nsec, maximum. The TDRSS ranging system will compensate the range measurements for the above TDRSS delays only, using measured values. The random root–mean–square (rms) instrumental error contributions to range measurement from TDRSS shall be **(TBD–3)** nsec, rms, maximum.

3.3.6 Doppler Tracking

The rms phase noise contributions to Doppler tracking resulting from TDRSS shall be 0.2 radians, maximum.

The GN shall generate Doppler data with a uniform 0.1–sec sampling interval, with an incremental accuracy of 0.01 cycle rms and a resolution of 0.001 cycle. Doppler counts can be continuously accumulated for 156 minutes at a maximum Doppler frequency up to 230 kHz.

3.4 Spacecraft/TDRSS/GN Communication Link Modes

Spacecraft communication forward and return link modes are defined in Tables I and II, respectively.

Table I. Spacecraft Command Modes

Link	Service	Rate	Antenna	Comments
3	TDRS–SSA	10000 bps	HGA (LHC/RHC)	High–rate cmds, Normal Mode
1	TDRS-MA	1000 bps	HGA (LHC)	Low-rate cmds, Contingency
5	TDRS-SSA	125 bps	Omni (RHC)	Deployment, Contingency
9	GN	2000 bps	Omni (RHC)	Emergency

Notes:

1. A Contingency is defined as a non-normal operational condition such as the need to command the Spacecraft during non-SA contact periods, or as the need to reconfigure the Spacecraft using the S-band Omni antennas.
2. An Emergency is defined as a non-normal operational condition which forces the use of the GN network instead of any TDRS.

Table II. Spacecraft Telemetry and Tracking Modes

Mode	Link	Service	Data Mode	Rate I /Q	Antenna / (Polarization)	Mod.	Tracking	PN Code
Normal	2A	TDRS-MA DG1, M1,2	Real-Time H/K Real-Time H/K	16 kbps(3) 16 kbps	HGA (LHC)	SQPN	range/ Doppler	On
Normal	2B	TDRS-MA DG1, M1,2	Real-Time H/K Diagnostic	16 kbps(3) 16 kbps	HGA (LHC)	SQPN	range/ Doppler	On
Normal	4A	TDRS-SA DG1, M1,2	Real-Time H/K Real-Time H/K	16 kbps 16 kbps	HGA (LHC or RHC)	SQPN	range/ Doppler	On
	4B	TDRS-SA DG1, M1,2	Real-Time H/K Diagnostic	16 kbps 16 kbps	HGA (LHC or RHC)	SQPN	range/ Doppler	On
	4C	TDRS-SA DG1, M3	Real-Time H/K(5) H/K Playback	16 kbps 256 kbps	HGA (LHC or RHC)	QPSK	range/ Doppler	On, I Ch
Contingency	6A	TDRS-SA DG1, M1,2	Real-Time H/K Real-Time H/K	1 kbps (3) 1 kbps	Omni (RHC)	SQPN	range/ Doppler	On
	6B	TDRS-SA DG1, M1,2	Real-Time H/K Diagnostic	1 kbps (3) 1 kbps	Omni (RHC)	SQPN	range/ Doppler	On
Normal	8A	TDRS-KSA DG2	Sci. Playback(4) Sci. Playback	75 Mbps 75 Mbps	HGA (LHC or RHC)	SQPSK	no	Off
	8B	TDRS–KSA DG2	Sci. Playback(4) Real–Time Sci.	75 Mbps 75 Mbps	HGA (LHC or RHC)	SQPSK	no	Off
	8C	TDRS–KSA DG2	Real–Time Sci.(4) Real–Time Sci.	75 Mbps 75 Mbps	HGA (LHC or RHC)	SQPSK	no	Off
Emergency	10A	GN	Real-Time H/K Real-Time H/K	16 kbps 16 kbps	Omni (RHC)	Note 1	Doppler	Off
	10B	GN	Real-Time H/K Diagnostic	16 kbps 16 kbps	Omni (RHC)	Note 1	Doppler	Off
	10C	GN	Real-Time H/K Sci. Playback	16 kbps 512 kbps	Omni (RHC)	Note 1	Doppler	Off

Notes:

1. GN Modulation is PSK on subcarrier and PM on carrier.
2. There is no or range rate tracking for Mode 2 (M2) operations.
3. There is no requirement to process the I channel.
4. Links 8A and 8C have a single data source, while 8B has a dual data source.
5. The power ratio, I/Q, is 4:1.

(This page intentionally left blank.)

4 LINK INTERFACE CHARACTERISTICS

4.1 Purpose

This section specifies the functional design of each RF link. Pertinent Spacecraft and TDRSS communications signal designs and system performance requirements are also specified. The link interface characteristics are specified in Tables VIII and XI (Paragraphs 4.5.1 and 4.5.3, respectively).

4.2 Link Functional Designs

4.2.1 TDRS to Spacecraft S-band, MA, Forward Link

4.2.1.1 General

The Spacecraft shall utilize the EOS–AM S–band transponder as the receiver and transmitter for all S-band communication signals. TDRS to Spacecraft forward link service is available on a scheduled basis during intervals that TDRS-Spacecraft line-of-sight exists. This link contains a command channel and a PN range channel and will be a contingency command link.

4.2.1.2 Link Type

This S-band multiple access (SMA) link shall be used to provide command data to the Spacecraft at the nominal data rate of 1 kbps. This link shall constitute the forward element of the channel necessary for determining range and range rate data of the Spacecraft through TDRSS when this channel is being used in the coherent mode (DG1, mode 1). The functional interface of this link shall be as shown in Figure 2.

For this link, command data in the NRZ-M format at a rate of 1 kbps shall be provided to the TDRSS ground station. The command data shall be modulo-2 added asynchronously to the command channel pseudonoise code with the resulting spread-spectrum coded sequence modulating the in-phase (I) channel of an unbalanced quadriphase shift keyed (UQPSK) transmitter at a rate of 3.078 Mchip/second, synthesized from the forward link carrier frequency. The quadrature (Q) channel of this transmitter shall be used as the range channel and shall be spread spectrum modulated with the PN range code by the range code generator. The data output of this channel shall be at the rate of 3.078 Mchip/second, synchronized with the command PN code rate. This generator shall also formulate a synchronization pulse code that shall synchronize the command channel PN code and also be provided to the ranging equipment in the TDRSS ground station for use in computing the Spacecraft range and range rate. The modulation energy in the command channel shall be ten times that of the range channel. The TDRS transmitter shall operate at a nominal frequency of 2106.4 MHz. This MA link shall use the S-band feed on the High Gain Antenna on the Spacecraft, which has a 4.5 ft diameter parabolic reflector with a left hand circularly polarized feed.

In the Spacecraft, the UQPSK receiver of the EOS–AM Spacecraft S–band transponder incorporates a spread-spectrum demodulator which shall despread the spectrum. The Transponder includes a command detector that shall decode the command data and strip out the code synchronization signal

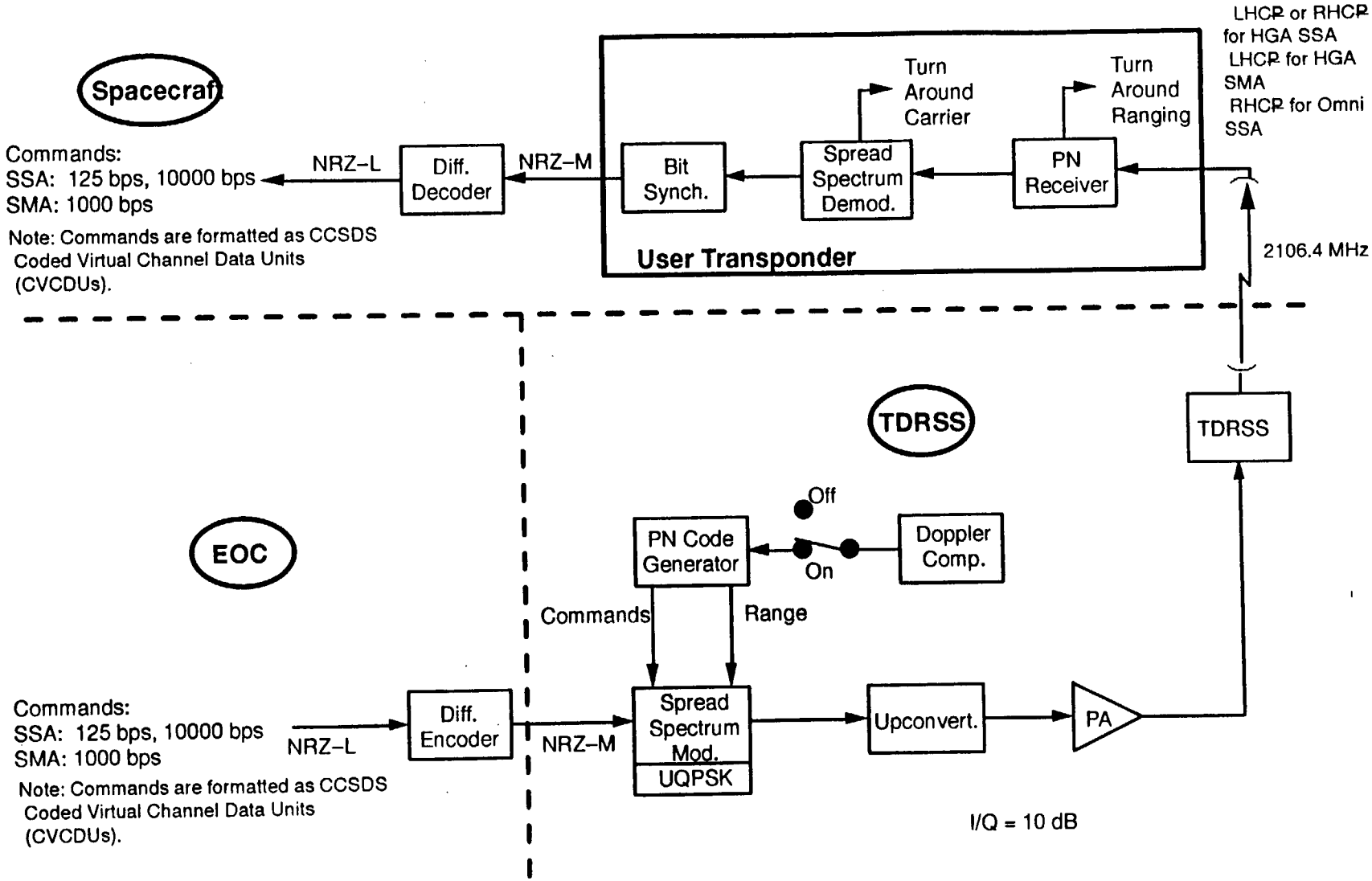

Figure 2. TDRSS-to-Spacecraft MA and SSA Forward Link Configuration

which shall be used for range channel demodulation and for synchronizing the return link PN code generated in the Spacecraft with the received forward link PN code. The detected command data, which is in NRZ-M format, shall be converted to NRZ-L format. The command data is then supplied to the Command and Data Handling (C&DH) Subsystem.

4.2.1.3 Signal Characteristics

The signal characteristics of the MA forward link shall be in accordance with those shown for the MA service in Table III. The PN chip rate shall be coherently related to the transmitter carrier frequency. The forward link shall include separate but simultaneous command and range channels. The all-1's condition of the range channel PN code shall be time-synchronized to the command channel PN code generator. A short-cycled PN (i.e., Gold) code shall be used for the command channel PN code.

4.2.2 Spacecraft to TDRS S-band MA Return Link

4.2.2.1 General

The Spacecraft shall utilize the EOS–AM Spacecraft S–band transponder for this link. This Transponder shall be configured for a 4:1 transmitter power split between the Q-channel and the I-channels.

4.2.2.2 Link Type

The MA link shall be utilized to send real-time and diagnostic (e.g. memory dump) telemetry data from the Spacecraft to TDRS at the data rate of 16 kbps. This link shall constitute the return element of the channel necessary for determining range and range rate data of the Spacecraft through TDRSS, when the coherent mode (DG 1, mode 1) is being utilized.

4.2.2.3 Functional Design

The functional interface of this link shall be as shown in Figure 3. For this link, real-time and/or SCC computer dump data is provided to the Communications Subsystem by the C&DH Subsystem in the NRZ-M format at a rate of 16 kbps on the Q channel. The data shall be processed by a convolutional encoder with a rate 1/2 and constraint length of 7. The encoded data, at a rate of 32 K symbols/second per channel, shall be modulo-2 added asynchronously to the return link PN code, with the resulting spread-spectrum coded sequence modulating the I and Q channels (at a nominal rate of 3.078 Mchips/sec) of the Staggered Quadriphase Pseudonoise (SQPN) transmitter in the EOS–AM Spacecraft S–band transponder on the Spacecraft. The modulation energy in the Q-channel shall be 4 times that for the I-channel.

Table III. S-band Forward Link Signal Parameters from TDRS to Spacecraft

Parameter	Definition
TDRS transmit carrier frequency (MHz)	F
Carrier frequency arriving at user spacecraft (MHz) (Note 1)	F_R
Command Channel radiated power / Range channel radiated power $= \frac{I}{Q}$	+10 dB
Range Channel (Q)	
Carrier	Command channel carrier delayed $\pi/2$ radians
PN modulation	PSK, $\pm\pi/2$ radians
Carrier suppression	30 dB minimum
PN chip rate	Same as command channel PN chip rate
PN code length (chips)	$(2^{10} - 1) \times 256$
PN code epoch reference	All 1's condition synchronized to the command channel PN code
PN code family	Truncated 18-stage shift register sequences
Command Channel (I)	
Carrier frequency (MHz)	F
PN Modulation	PSK, $\pm\pi/2$ radians
Carrier suppression	30 dB minimum
PN code length (chips)	$2^{10} - 1$
PN code family	Gold codes
F (MHz) nominal	2106.4
PN chip rate (chip/sec)	$\left[\frac{31}{221 \times 96}\right] \times F$
Data format	NRZ-M
Data rate	125, 1000, 10000 bps
Data modulation	Modulo-2 added asynchronously

Notes

1. During periods of Doppler compensation, $F_R = f_o \pm E$; where $f_o = 2106.4$ MHz (nominal center frequency of the Spacecraft receiver) and E defined as follows. Doppler compensation shall be available for $\dot{R} \leq 12$ Km/sec

	Signal Acquisition	Signal Tracking
Service	$\ddot{R} < 15$ m/sec^2	$\ddot{R} < 50$ m/sec^2
MA and SSA	$E = 700 \times [\ddot{R}/10]$	

Forward link Doppler compensation for MA and SSA shall not increase the peak phase error of a receiver (with a second-order Costas loop BL = 32 Hz, at C/No = 33 dB-Hz in the command channel) more than 3 degrees relative to the phase error for a Doppler-free carrier.

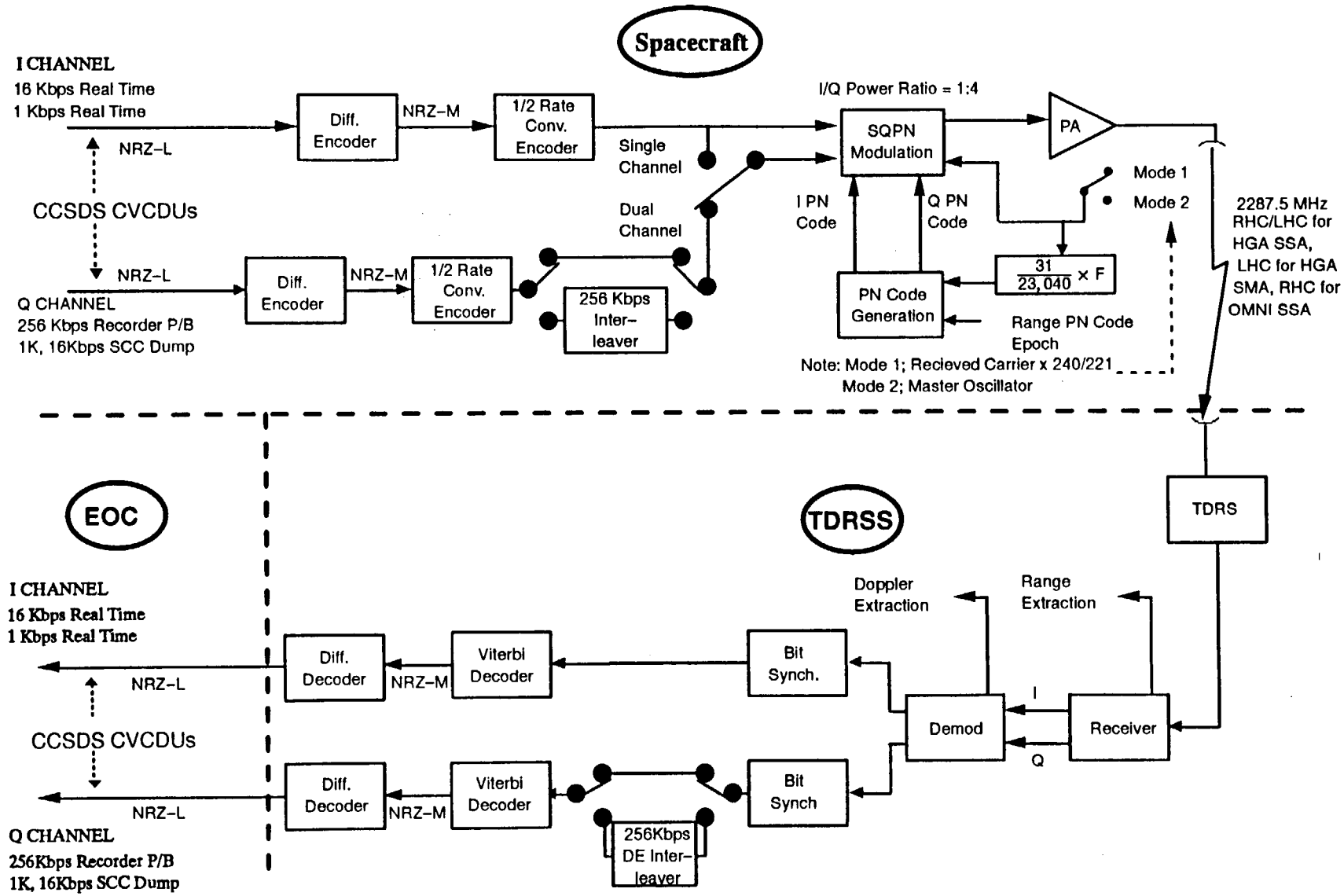

Figure 3. Spacecraft-to-TDRSS MA and SSA Return Link Configuration

IS20008504
31 March 1993

When in Data Group 1, Mode 1, both channels shall include synchronization of the unique Spacecraft return link PN code with the received forward link PN code to provide the return link ranging intelligence. For Mode 1, the Q channel PN code is a delayed version of the I channel PN code and is offset by $X \pm 1/2$ chip rate relative to the I channel PN code. The forward code itself shall not be turned around and transmitted. In this mode, the transmitter frequency shall be coherent with the frequency received in the MA forward link of Paragraph 4.2.1 with exact ratio of 240/221. When in DG1, Mode 2, a Master Oscillator (MO) on the Spacecraft shall maintain the return transmit frequency at a nominal value of 2287.5 MHz. The I channel and Q channel codes are short Gold codes. There is no code synchronization to the forward link range channel PN code epoch, however the return link PN codes are coherently related to the transmitted carrier frequency.

This link shall employ the left-hand circularly polarized, S-band feed on the Spacecraft High Gain Antenna for transmitting the signal to the TDRS.

For this link, the TDRSS ground station shall utilize both the I and Q channels from the TDRS. The TDRSS ground station receiver provides telemetry data at a nominal rate of 3.078 Mchips/sec to a spread-spectrum demodulator which shall output data at a rate of 32 K symbols/sec per channel to a bit synchronizer. This synchronizer shall produce a soft-decision version of the encoded sequence and a Viterbi algorithm decoder with a rate 1/2 and length of 7 shall resolve the bit inversion and produce an unambiguous telemetry bit stream in the NRZ-M format which shall be converted to NASCOM NRZ-L format. When the link is being operated in DG1, Mode 1, the spread-spectrum demodulation shall also strip out the range code synchronization signal for use in computing Spacecraft ranging data by the ranging equipment in the TDRSS ground station.

The signal parameters of the MA returned link shall be in accordance with those for the MA service shown in Table IV.

4.2.3 TDRSS to Spacecraft S-band SSA Forward Link

4.2.3.1 General

This S-band single access (SSA) link shall be used to provide deployment and operational low rate command data to the Spacecraft through TDRSS at a rate of 10000, or 125 bps. It shall also constitute the forward element of the channel for determining range and range rate data of the Spacecraft through TDRSS when this channel is being used.

4.2.3.2 Functional Design

The functional interface of this link shall be as shown in Figure 2 and as described in Paragraph 4.2.1 except as noted in this paragraph. The RF signal shall be received on the Spacecraft by means of the S-band omni antennas or via the S-band feed (RCP or LCP) of the High Gain Antenna.

The signal parameters of the SSA forward link shall be in accordance with those shown for the SSA service in Table III. The other characteristics of the link shall be as defined in Paragraph 4.2.1.3.

Table IV. S-band Return Link Signal Parameters from Spacecraft to TDRSS

Parameter	Definition
Spacecraft Transmit Carrier Freq. DG1 (MA and SSA)	240/221 x Spacecraft Receive Frequency (F_R)
Carrier (F_R) reference (Hz) Mode 1 and 3 Mode 2	 $\left[\frac{240}{221}\right] \times F_R$ Spacecraft Master Oscillator
DG1 PN modulation, Modes 1 and 2 PN code length (chips) Mode 1 Mode 2 PN code epoch reference Mode 1 I Channel Q Channel (Note 2) Mode 2 I Channel Q Channel PN code family Mode 1 Mode 2 Data Format Data modulation Modes 1 and 2	 SQPN (Note 1) $(2^{10} - 1) \times 256$ $2^{11} - 1$ All 1's condition synchronized to all 1's condition of received forward link range channel. All 1's condition delayed x + 1/2 PN chips relative to I channel epoch. Spacecraft precision oscillator Delayed 1/2 PN chip period relative to I Channel PN code epoch Truncated 18-stage shift register sequences Gold codes NRZ-M Modulo-2 added asynchronously to PN code

Table IV. S-band Return Link Signal Parameters from Spacecraft to TDRSS (Continued)

Parameter	Definition	
	SMA (DG1)	SSA (DG1)
PN chip rate (chips/sec)	$\left[\frac{31}{240 \times 96}\right] \times F_1$	$\left[\frac{31}{240 \times 96}\right] \times F_1$
Mode 1 data rate, maximum (Note 3)		
I Channel	16 kbps	16 kbps
Q Channel	16 kbps	16 kbps
Mode 2 data rate, maximum (Note 3)		
I Channel	16 kbps	16 kbps
Q Channel	16 kbps	16 kbps
Mode 3 data rate, maximum		
I Channel	N/A	16 kbps
Q Channel	N/A	256 kbps
Carrier (F_1) reference (Hz)		
Mode 1 and 3	$\left[\frac{240}{221}\right] \times F_R$	$\left[\frac{240}{221}\right] \times F_R$
Mode 2	MO	MO

Notes:

1. When identical data is being transmitted on the I and Q-Channels (single data channel configuration for Modes 1 or 2), the I-Channel carrier phase shall lead the Q-Channel phase by Pi/2 radians.
2. Q-Channel PN code shall be identical to I-Channel PN code offset by X $\geq$ 20,000 chips and defined by PN code assignment (refer to STDN 103).
3. Rate 1/2 convolutional coding shall be used in all cases.

4.2.4 Spacecraft to TDRSS S-band SSA Return Link

4.2.4.1 General

This SSA link shall be used to transmit real-time telemetry data from the Spacecraft to the TDRSS at the nominal rate on the I-channel of the transmitter. In addition, the Q-channel shall be used for transmitting a SCC computer memory dump or a playback of the stored housekeeping data. It shall also be used as the return element of the channel for determining range and range rate data of the Spacecraft through TDRSS when this link in the coherent mode is being used.

4.2.4.2 Link Type

The functional interface of this link shall be as shown in Figure 3 and described in Paragraph 4.2.2, except as noted in this paragraph. For this link, the 16 kbps telemetry from the Spacecraft shall be processed as in Paragraph 4.2.2.3. A dump of the Spacecraft SCC computer memory data at a data rate of 16 kbps, or a playback of housekeeping telemetry data at a rate of 256 kbps (without PN code modulo-2 addition) may be selected via the Q-channel. The data selected to be transmitted on the Q-channel shall be processed similarly to that on the I-channel by convolutionally encoding at a rate of 1/2 and length of 7. The encoded data, at a rate of 32 K symbols/sec per channel, shall be modulo-2 added asynchronously to the return link PN code of the Spacecraft with the resulting spread-spectrum coded sequence modulating the I and Q-channels (at a nominal rate of 3.078 Mchips/sec) of the SQPN transmitter in the transponder on the Spacecraft. Similar to the SMA return link, the modulation energy in the Q-channel shall be 4 times that for the I-channel.

When in DG1, mode 1, both channels shall include synchronization of the Spacecraft unique return link PN code with the received forward link PN code to provide the return link ranging intelligence. The forward link code itself shall not be turned around and transmitted. Other characteristics of the link transmission shall be as described in Paragraph 4.2.2.3. When in DG1 mode 3 (256 kbps), which is used for stored housekeeping playback, a periodic convolutional interleaver (PCI) shall be used to minimize degradation of the link in a pulse RFI environment. The (PCI) contains 30 separate delay elements with the longest being 116 bits, and a different delay path is selected each bit time. The (PCI) is further specified in Paragraph 4.3.11.

The signal characteristics of the SSA return link shall be in accordance with those for the SSA service shown in Table IV.

This SSA link shall use the right-hand circularly polarized omni directional antenna, or the S-band feed of the HGA, which has dual polarization capability .

4.2.5 Spacecraft to TDRSS Ku-band, KSA, Return Service

4.2.5.1 General

Spacecraft to TDRSS KSA return link service will be available on a scheduled basis during intervals that Spacecraft-TDRSS line-of-sight exists. This link can carry either two high rate science data channels or a single high rate science data channel using a dual channel configuration under DG2 operation.

4.2.5.2 Functional Design

The functional interface of this link shall be as shown in Figure 4. The RF signal shall be transmitted by the Spacecraft via the Ku-band feed on the HGA. Signal parameters of the KSA return link shall be in accordance with those shown in Table V. The antenna polarization can be selected to be either LHC or RHC.

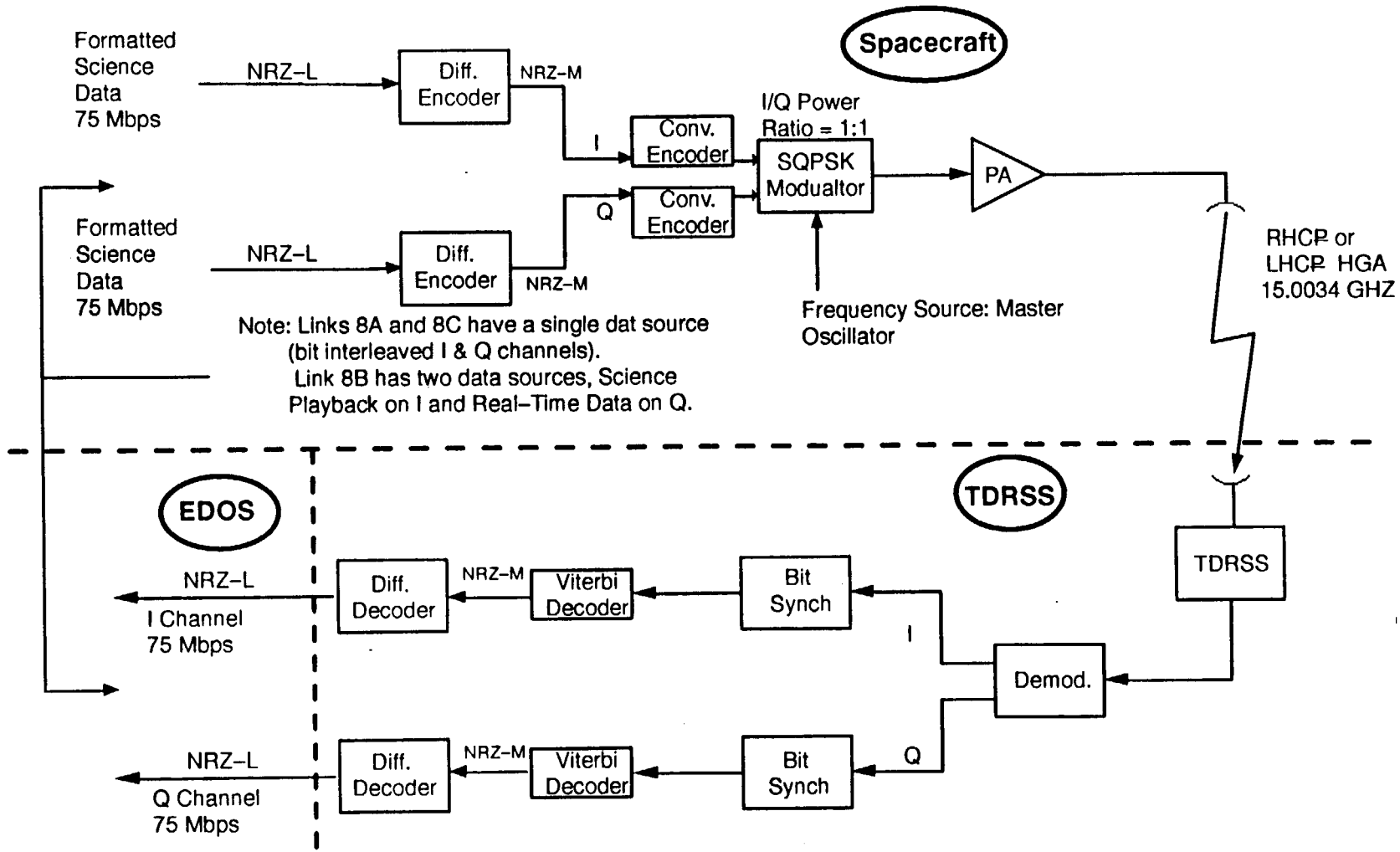

Figure 4. Spacecraft-to-TDRSS KSA Return Link Configuration

Table V. Ku-band Return Signal Parameters

Parameter	Description
DG2	
Transmit carrier frequency (MHz)	F_2 = 15,003.4
Carrier (F_2) reference	Spacecraft Transmitter Oscillator
Data modulation	SQPSK
Data format	Convolutionally Encoded, NRZ-M
Data rate restrictions	
Total	150 Mb/sec
I channel	75 Mb/sec
Q channel	75 Mb/sec
Q:I Channel Power Ratio	1:1
Antenna Polarization	Selectable: RHC or LHC

4.2.5.3 Link Description

The DG2 service signal can have either a single data channel or two independent data channels (dual data channels). In single channel mode, a 150 Mbps data stream is de–bit interleaved into two streams of 75 Mbps each (one for I and one for Q). In dual channel mode one 75 Mbps data stream is sent on I and the other is sent on Q. The data channels are differentially encoded to NRZ-M at a rate of 75 Mbps and SQPSK modulated onto the I and Q channels of the Ku-band carrier signal. Both the I & Q channels will be rate 1/2 convolutionally encoded. The transmit carrier is derived from a spacecraft local oscillator. The I and Q channel BPSK modulated signals are linearly summed to provide a balanced signal with an I/Q channel power ratio of 1:1. The SQPSK modulated signal is transmitted at 15.0034 GHz to TDRSS.

Following SQPSK demodulation, bit synchronizers and Viterbi Decoders provide data clock recovery and restored digital data NRZ-M signals to the differential decoder.

After differential decoding, either one or two data channels are provided at the interface to the ground segment. For the dual data channel configuration, due to the balanced power of the two transmitted channels, channel ambiguity may result at this interface, and will have to be resolved by a technique such as frame synchronization at EDOS in the spacecraft ground segment. For the single data channel configuration, data channel ambiguity does not exist.

4.3 Baseband Signal Description

4.3.1 Purpose

This paragraph describes baseband signal processing in the Spacecraft, TDRSS, Spacecraft project ground segment, and the baseband signal parameters which affect the performance of the RF link.

4.3.2 Command Data Frame Format

4.3.2.1 S-band Command Format

The S-band forward link command data is a serial 125, 1000, or 10000 bps NRZ-M data stream. The format for S-band commands is compatible with the CCSDS 203.0-B-1 Telecommand Architectural Definition (Jan. 1987, Blue Book). The format for the uplink is shown in Figure 5. Commands are sent as data within a packet, and the packets are enclosed in transfer frames. The transfer frames are encoded into short, fixed length (64 bits), Telecommand Codeblocks as shown in Figure 5. A transfer frame is transmitted as a sequential set of Telecommand Codeblocks encapsulated by a Command Link Transmission Unit (CLTU). The CLTU begins with a 16 bit start (sync) sequence and ends with a 64 bit tail sequence. The maximum length of an S-band packet is 86 octets, as shown in Figure 5.

4.3.3 Command Encoding/Decoding

4.3.3.1 S-band

Frames transmitted over the S-band forward link shall be encoded using a (63, 56) modified Bose-Chaudhuri-Horquengham (BCH) code, as specified in CCSDS 201.0-B-1, Telecommand Recommendation, Part 1, Channel Service. The code block size shall be 64 bits, as shown in Figure 5. The BCH encoder is shown in Figure 6.

4.3.4 Forward Link/TDM Data Format

Not applicable.

4.3.5 Forward Link Baseband Signal Parameters

TDRSS will provide the following forward link baseband signal parameters within the values shown for both the MA and SSA Forward link service.

a. Transmitted bit timing

   1. Accuracy - $\leq$ 0.001 percent

   2. Stability - $\leq$ 1 part in 10^9

b. Data bit jitter - $\leq$ 1 percent peak

c. Data asymmetry - $\leq$ $\pm$3 percent

d. Data transition time -

   1. MA: $\leq$ 5 percent of data rate but not less than 35 nanoseconds

   2. SSA: $\leq$ 5 percent of data rate but not less than 8 nanoseconds

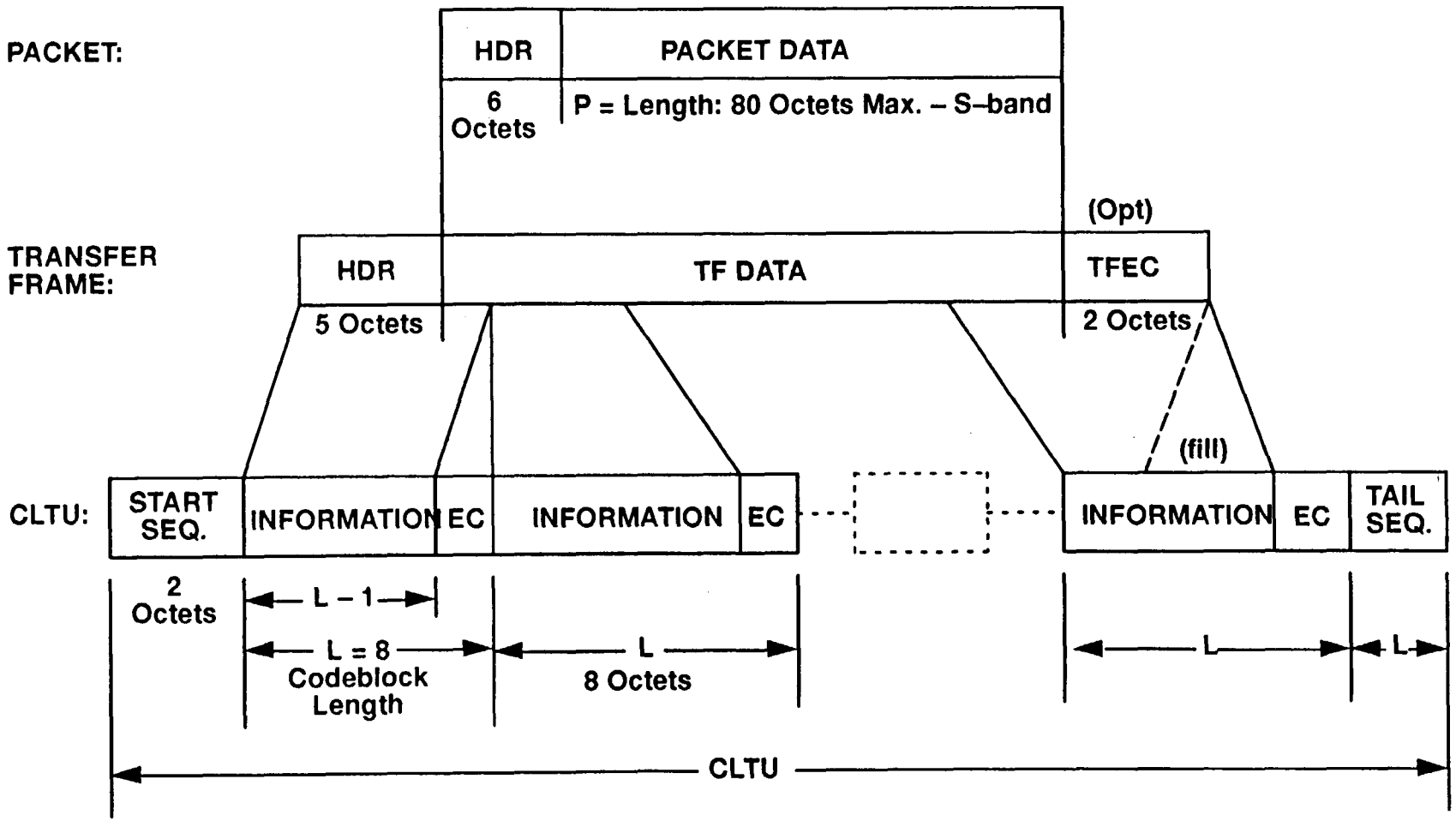

Figure 5. S–band Command Format

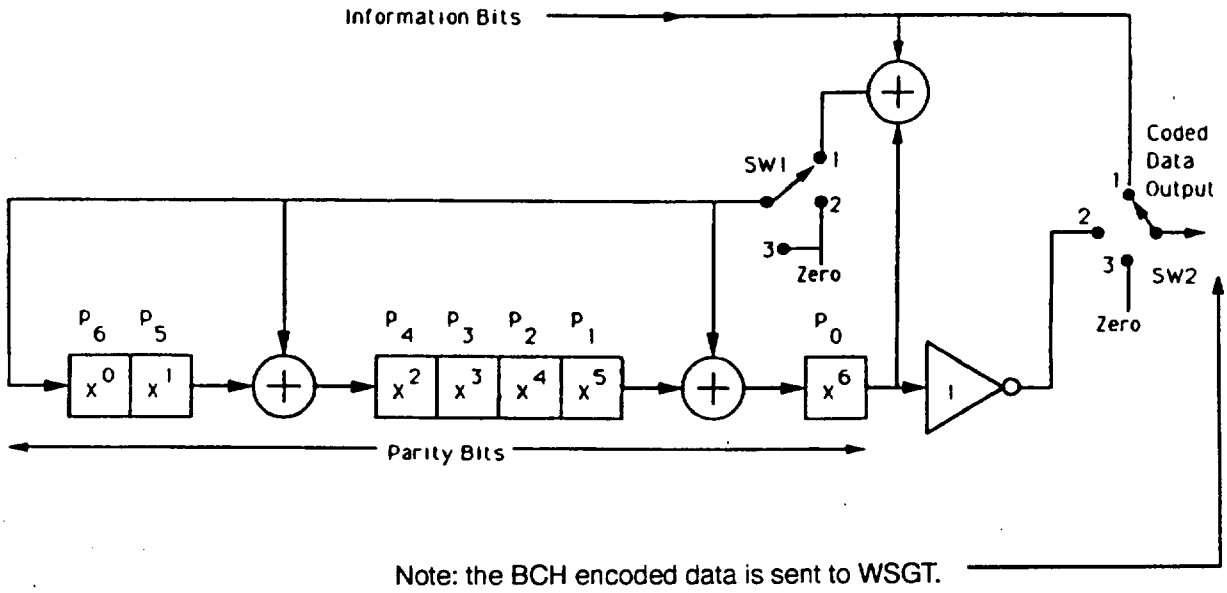

Figure 6. Modified BCH Code Generator - S-band Command Link

4.3.6 S-band Data Frame Format

All Spacecraft data transmitted over the S-band return links will be sent as a class of data delivery service equivalent to Grade 2 service, defined in CCSDS 701.00-R-3, Advanced Orbiting Systems, Networks and Data Links: Architectural Specification. See Figure 7. Grade 2 service will have a BER of < 10^{-7}. The TDRSS only provides 10^{-5} BER at the WSGT interface. The EOS Data Operations Service (EDOS) will provide a 10^{-7} BER after processing the data stream. The EDOS is not part of TDRSS.

4.3.7 Ku-band Data Frame Format

All Spacecraft science and engineering data will be formatted for transmission at 150 Mbps over the Ku-band return link. The delivery service will be equivalent to the Grade 2 service defined in CCSDS 701.00-R-3, Advanced Orbiting Systems, Networks and Data Links: Architectural Specification, will be provided. Grade 2 service will have a BER of < 10^{-7} as measured at a **(TBD–4)** data delivery point. See Figure 8 for the Downlink Transfer Frame Format. The TDRSS only provides 10^{-5} BER at the WSGT interface. The EOS Data Operations Service (EDOS) will provide a 10^{-7} BER after processing the data stream. The EDOS is not part of TDRSS.

4.3.8 Return Link TDM Frame Format

Not applicable.

4.3.9 Channel Convolutional Encoding/Viterbi Decoding

4.3.9.1 General

Convolutional encoding and Viterbi decoding with eight levels of quantization shall be used for S-band and Ku–band link channel encoding/decoding to provide a performance gain for TDRSS S-band return links.

4.3.9.2 Convolutional Code

For the MA and SSA, and KSA return links, a non-systematic[1] transparent[2] convolutional code with a code rate (1/V) of 1/2 and a constraint length of 7 shall be used. The shift register representation of the convolutional encoder shall be as illustrated in Figure 9.

1. Non-systematic - Original information bits do not appear in output bit stream.
2. Transparent - If I(B) is mapped into T(B) then the complement of I(B) is mapped into the complement of T(B).

The G2 symbol is inverted to provide an increased symbol transition density expressed in Megasymbols per second (Ms/sec), when the uncoded data signal has a low transition density. The commutation rate and the input data rate are coherent.

4.3.9.3 Viterbi Decoding

A phase ambiguity will occur in the carrier reference signal in the receiver whenever a suppressed carrier tracking loop is used to synthesize the coherent carrier reference. The incorrect phase of the reference signal will result in an inversion of the baseband data signal at the demodulator output.

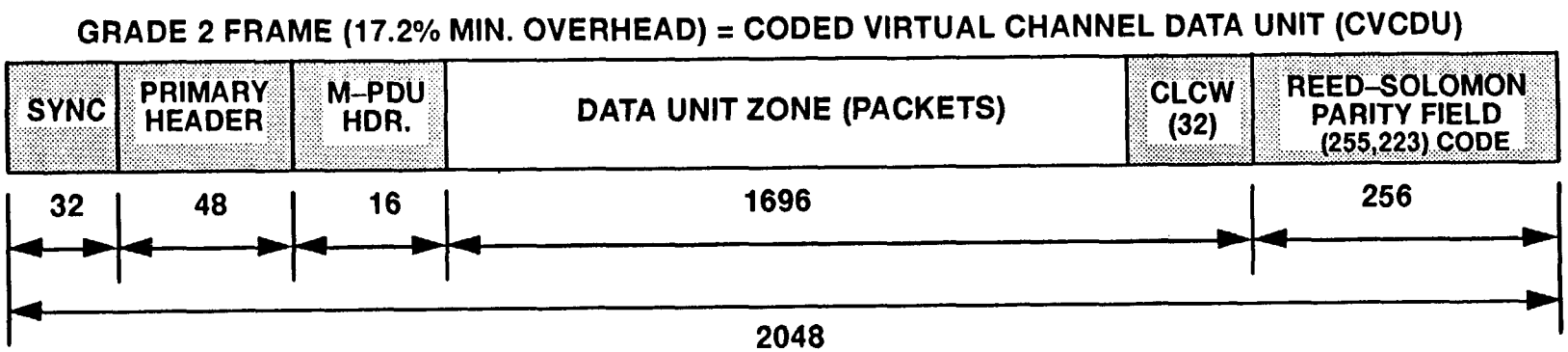

FORMATS BASED ON CCSDS 701.0–B–1 (ADVANCED ORBITING SYSTEMS, NETWORKS & DATA LINKS)
Notes: M–PDU = Multiplexed Protocol Data Unit CLCW = Command Link Control Word

Figure 7. Channel Access Data Unit (Sync + Coded Virtual Channel Data Unit)

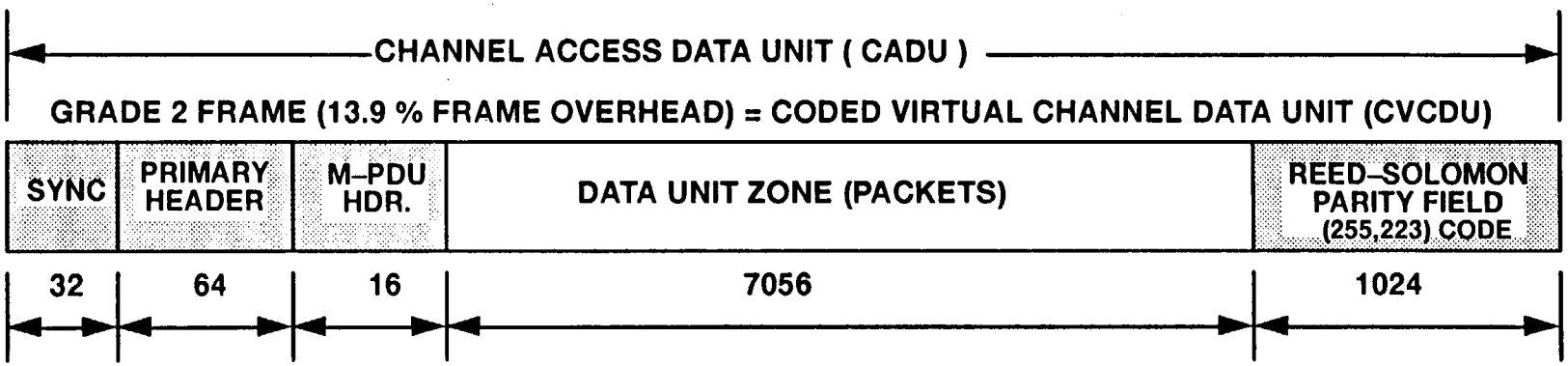

FORMATS BASED ON CCSDS 701.0–B–1 (ADVANCED ORBITING SYSTEMS, NETWORKS & DATA LINKS)
Note: M–PDU = Multiplexed Protocol Data Unit

Figure 8. Channel Access Data Unit (Sync + Coded Virtual Channel Data Unit)

DCC032993

IS20008504
31 March 1993

In addition, a symbol ambiguity exists since the Viterbi decoder has no prior knowledge whether a given symbol is from the G1 or G2 generator. The Viterbi decoder shall resolve the symbol ambiguity and shall decode either the true or inverted symbol, resulting in either a true or inverted data output for unconverted NRZ-L transmission and true data for NRZ-M transmission.

4.3.10 Reed-Solomon Outer Coding

Grade 2 service of the Ku-band return link data will have a (255-223) Reed-Solomon outer code with interleave depth I = 4 to provide the improved bit error performance. The Grade 2 service of the S–band return link data will have a (255–223) Reed–Solomon outer code with interleave depth I = 1.

4.3.11 Channel Interleaving/Deinterleaving

4.3.11.1 General

Symbol interleaving of convolutional encoder symbols on the SSA return link for 256 kbps data is used to allow operation of the link in a pulsed RFI environment. Channel error bursts caused by the pulsed RFI are transformed to single errors spaced sufficiently apart to appear to the Viterbi decoder as random errors. Thus, the link can operate with the performance required in paragraph 3.3 by increasing the Spacecraft EIRP to offset the errors caused by the pulsed RFI.

4.3.11.2 Periodic Convolutional Interleaving

The functional configuration for the (30,116) PCI of the encoder symbols is shown in Figure 10 as commutated delay elements. The input and output commutators are slaved, advanced for each encoded symbol, and recycled every 30 symbols. The input to the zero delay element will always be a G1 encoder symbol modulo-2 added to the initial cover sequence bit. The cover sequence is modulo-2 added bit by bit to the preinterleaved symbol to provide for deinterleaving synchronization with a high probability of acquisition. The first bit in the cover sequence occurs when the zero delay element is selected and the last bit occurs when the 116 delay element is selected.

4.3.11.3 Periodic Convolutional Deinterleaving

The functional configuration of the (30,116) PCD is shown in Figure 10. The input and output commutators are slaved, advanced for each encoded symbol, and recycled every 30 symbols. When the deinterleaving is synchronized to the interleaving, the output of the 116 element of the deinterleaver is always a G1 encoder symbol modulo-2 added to the initial cover sequence state. The cover sequence is modulo-2 added bit by bit to the deinterleaved symbols to remove the cover sequence added in the interleaver. The first bit in the cover sequence occurs when the 116 delay element is selected and the last bit occurs when the zero delay element is selected.

4.3.11.4 Synchronization

Synchronization and deinterleaving requires that the encoded symbols, which are delayed through the 4D delay elements (D=0,1,2,3....29) of the interleaver, are delayed through the (116 - 4D) delay elements of the deinterleaver. Thirty synchronization states exist in the deinterleaver, corresponding

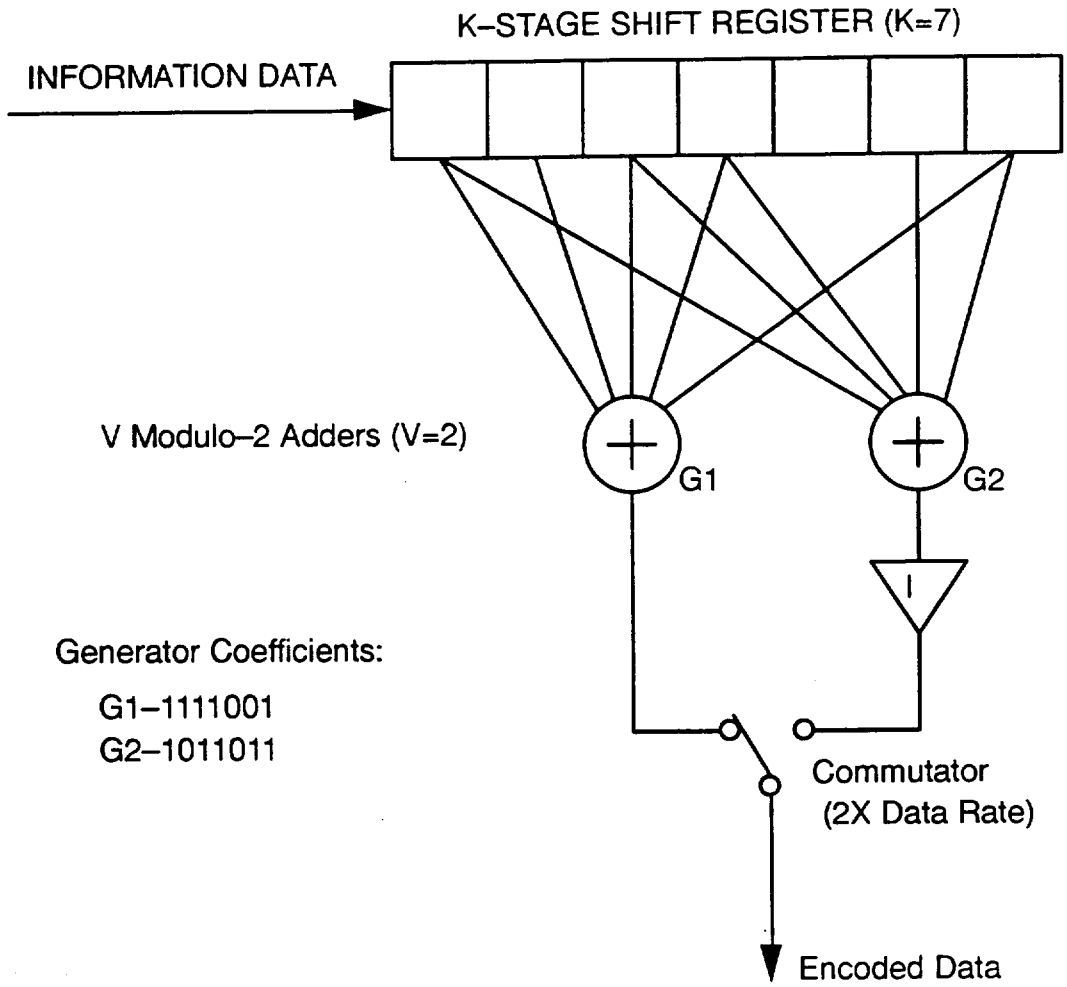

Note:

Symbol from G2 complemented. G1 precedes G2 relative to the information data bit period.

Figure 9. Convolutional Encoder Functional Configuration (V = 2, K = 7)

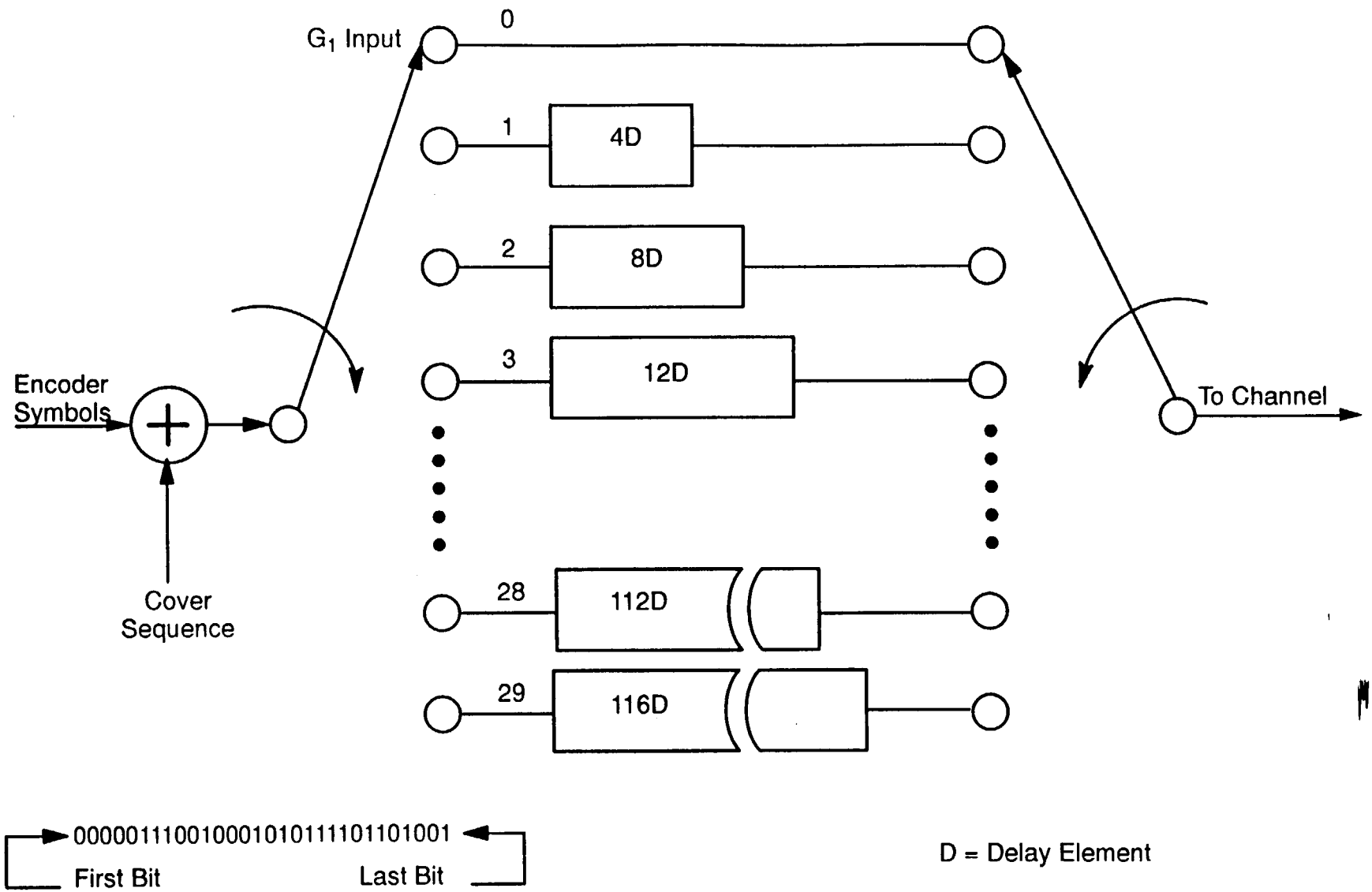

Figure 10. (30,116) Periodic Convolutional Interleaving

to the thirty positions of the deinterleaver commutators. The deinterleaving is synchronized to the interleaving by using the results of the Viterbi decoding metric calculations to determine when the correct sync state has been selected.

4.3.11.5 Separation

The PCI and PCD guarantee separation of any two symbols within 30 of each other in the interleaved channel symbol sequence to be least 120 symbols between each other in the deinterleaved symbol sequence to the Viterbi decoder. This separation is greater than the path memory length in the Viterbi decoder, thus assuring that the channel burst errors are decoded as single errors by the Viterbi decoder.

4.3.12 Return Link Baseband Data Signal Parameters

The Spacecraft return link baseband signal data parameters for the real-time telemetry, computer dump, and recorded telemetry channels are contained in Table VII (Paragraph 4.4.2.2), along with the modulation and RF signal parameters.

4.3.13 Data and Symbol Signal Formats

The telemetry data signal output on the NRZ-L signal format is converted to NRZ-M signal format prior to convolutional coding (as in the S-band case) or modulation (as in the Ku-band case), as indicated in Figures 3 and 4. The format for NRZ-M data shall conform to that shown in Figure 11.

4.4 RF Characteristics

4.4.1 Spacecraft Signal Processing

4.4.1.1 General

The following information defines characteristics of the RF signal and signal processing in the Spacecraft and in TDRSS which are pertinent to the functional performance of the RF links.

4.4.1.2 Carrier Modulation/Demodulation

4.4.1.2.1 MA Forward Link

For the TDRSS-to-Spacecraft MA forward links, unbalanced QPSK (UQPSK) is employed for carrier modulation. The functional configuration of the forward link modulation is shown in Figure 12.

a. The ranging channel PN code sequence in NRZ-M format phase shift keys one selected sine wave carrier (Q channel carrier) and the composite command channel signal (PN code + command data) phase shift keys a second coherent quadrature carrier (I channel, same frequency as the Q channel carrier with 90 degrees phase difference). The two PSK carriers are added with a power split of 90.9% for the I-channel and 9.09% for the Q carrier (the 10 dB power ratio is fixed ± 0.5 dB) to produce a single UQPSK carrier.

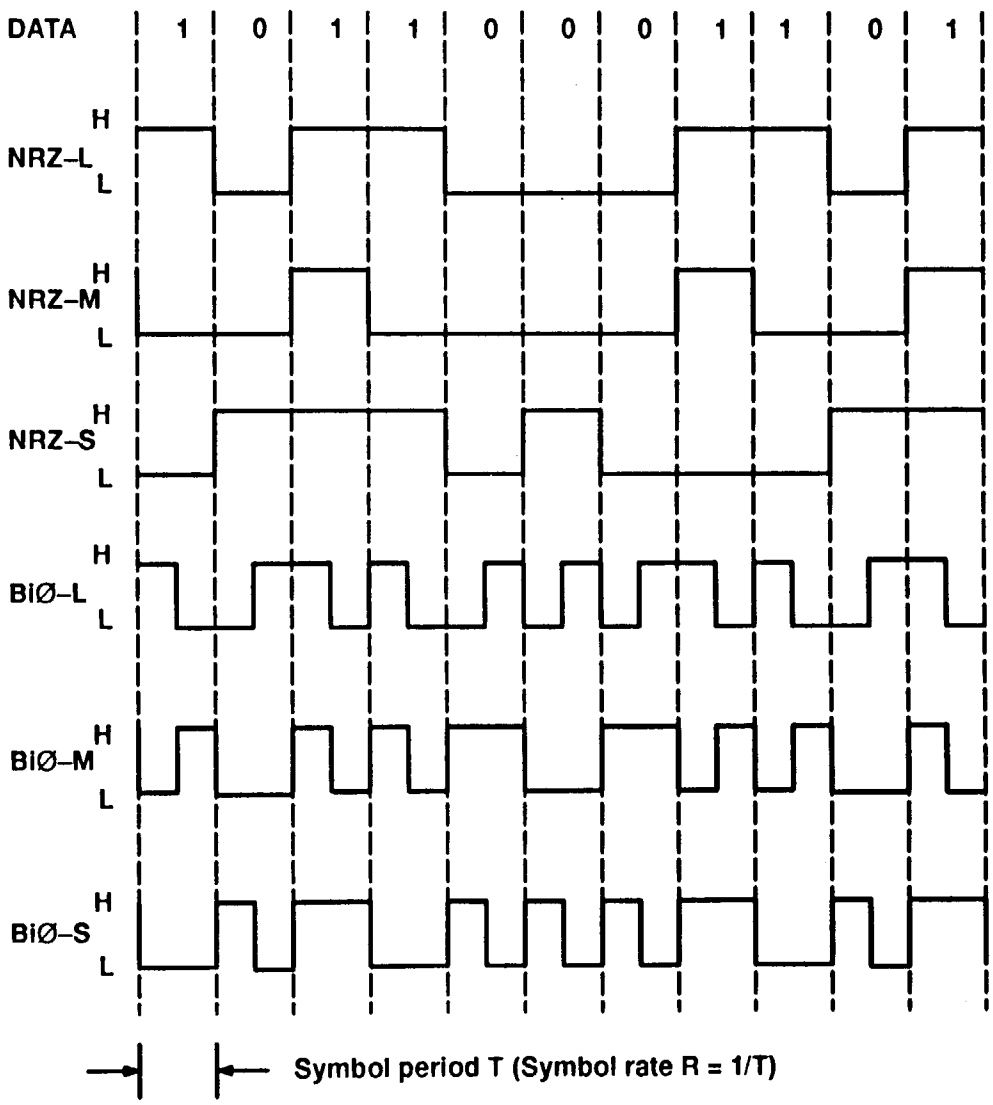

Sequence of binary symbols (bits, chips) "1" and "0"

Non-Return-to-Zero-Level
"1" is represented by a high (H) level during the symbol period
"0" is represented by a low (L) level during the symbol period

Non-Return-to-Zero-Mark
"1" is represented by a change in level
"0" is represented by no change in level

Non-Return-to-Zero-Space
"1" is represented by no change in level
"0" is represented by a change in level

Bi-phase-L (Manchester II)
A transition occurs at the middle of every symbol period
"1" is represented by a midperiod transition from H to L
"0" is represented by a midperiod transition from L to H

Bi-phase-Mark
A transition occurs at the betginning of every symbol period
"1" is represented by a midperiod transition
"0" is represented by no midperiod transition

Bi-phase-Space
A transition occurs at the betginning of every symbol period
"1" is represented by no midperiod transition
"0" is represented by a midperiod transition

Figure 11. Digital Data Signal Formats

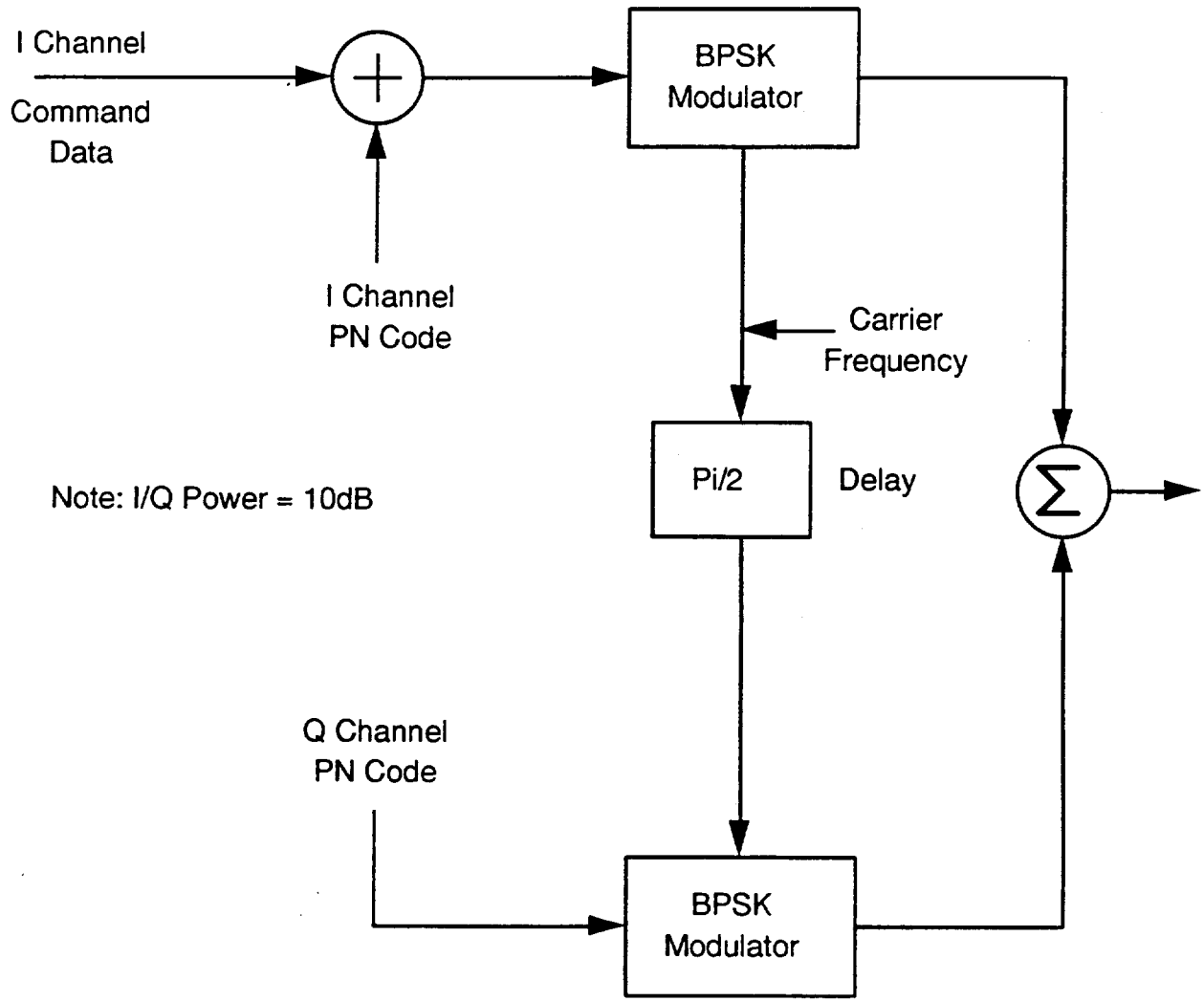

Figure 12. Forward Link Modulation Functional Configuration (SMA/SSA)

b. In the Spacecraft, the transponder demodulator provides coherent PSK demodulation of the I channel carrier signal and delivers the predetection command signal to the bit synchronizer for bit detection.

4.4.1.2.2 MA Return Link

For the Spacecraft-to-TDRSS MA return link, SQPN modulation is used as DG1 carrier modulation. The functional configuration for the return link modulation is shown in Figure 13.

a. The ranging channel PN code is modulo-2 added asynchronously to the I-channel data. This composite signal phase shift keys a sine wave carrier to become the I-channel carrier of the SQPN modulation. The Q–channel PN code is delayed x + 1/2 chip (staggered), where $x \geq 20{,}000$ & defined by PN code assignment, for DG1 Mode 1 and is delayed 1/2 chip for DG1 Mode 2.

b. This composite signal phase shift keys a quadrature carrier to become the Q-channel carrier of the SQPN modulation. The two carrier quadrature phase components are added (such that the power ratio Q/I = 4) to produce a single unbalanced SQPN modulated signal.

   1. For DG1, Mode 1, the I and Q channel PN codes are truncated 18-stage shift register sequences which are synchronized to the TDRSS-to-Spacecraft forward link range channel code.
   2. For DG1, Mode 2, the I and Q channel PN codes are Gold codes, which are not synchronized to the forward link PN codes.
   3. For both DG1, Modes 1 and 2, the PN code rate is coherently related to the transmitted carrier frequency.
   4. The carrier frequency for DG1, Mode 1, is coherent and a 240/221 multiple of the forward link received carrier frequency. For Mode 2, the carrier frequency is derived from the spacecraft oscillator (non-coherent operation).
   5. For Modes 1 and 2, the receiver in the TDRSS ground terminal coherently demodulates the despread PSK modulated carrier and delivers the predetection telemetry signal to the bit synchronizer for bit detection.
   6. For Mode 1 only, the I-channel PN code epoch may be processed by a ranging extractor to determine range and the recovered carrier may be processed to extract two-way Doppler for range rate data.

4.4.1.2.3 SSA Forward Link

The functional configuration of the SSA forward link is the same as the MA forward link described in Paragraph 4.4.1.2.1 and shown in Figure 12.

4.4.1.2.4 SSA Return Link

For DG1, Modes 1 and 2, the SSA return link is the same as described for the MA return link in Paragraphs 4.4.1.2.2 and shown in Figure 13. It can be seen that the only difference between SSA DG1 Mode 3 and MA DG1 Mode 1 is that the PN code input to the Q-channel is disabled (by

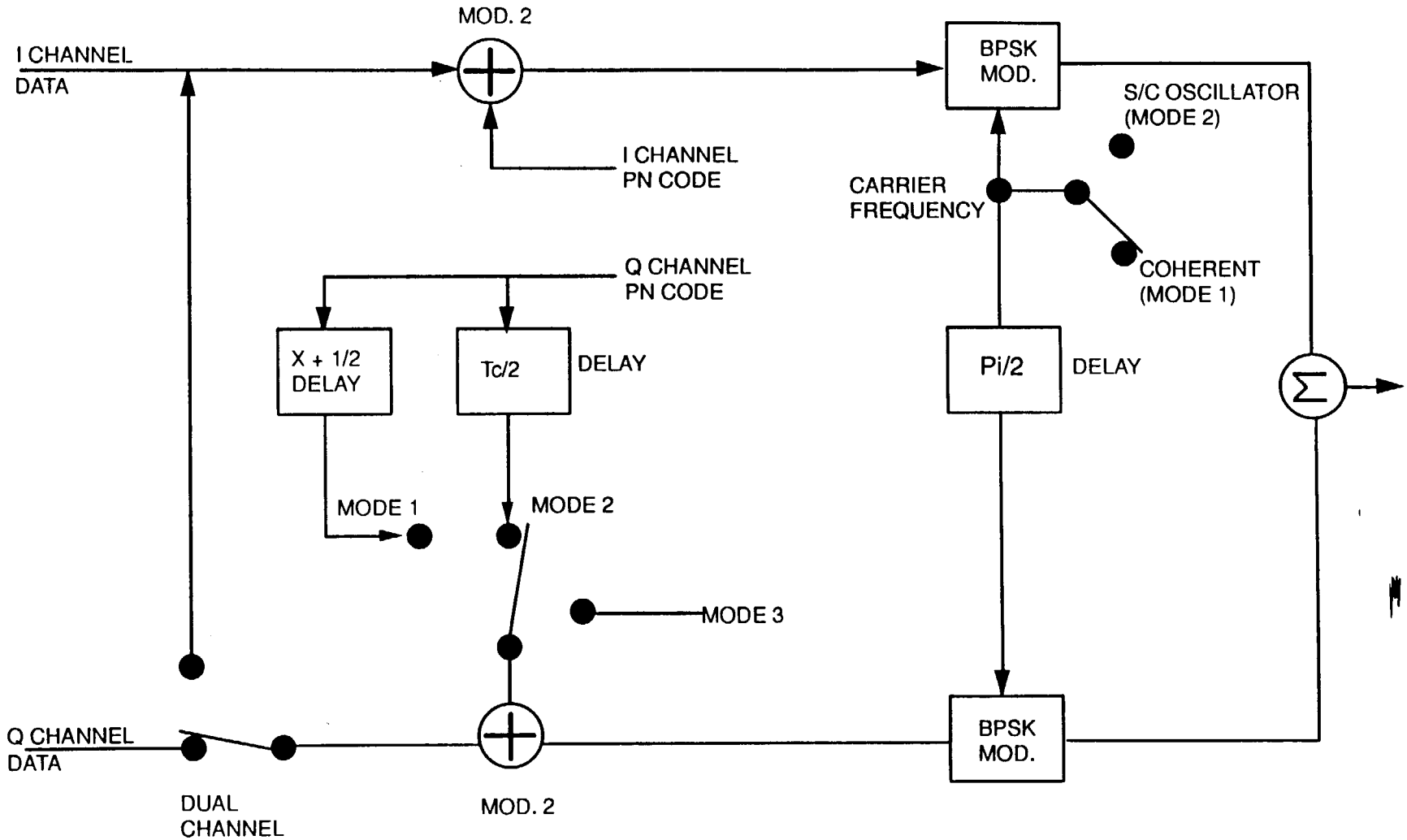

Figure 13. DG1 Return Link Modulation Functional Configuration

command) and there is no single channel mode. The Q-channel carrier and the reverse operation is performed in the TDRSS ground terminal. All other signal processing operations are the same as for the MA return link in DG1 mode 1, described in Paragraph 4.4.1.2.

4.4.1.2.5 KSA Return Link

For the Spacecraft–to–TDRS KSA return link, balanced SQPSK modulation (channel power ratio of 1:1) is used as DG2 carrier modulation as shown in Figure 14. This link will not provide ranging capability. The carrier frequency for DG2 operation is derived from the spacecraft local oscillator for non-coherent operation.

4.4.1.3 Spread Spectrum

4.4.1.3.1 General

RF spectrum spreading is required for the TDRS-to-Spacecraft SSA and MA forward links and for the Spacecraft-to-TDRS DG1 SSA and MA return links (for compliance with NTIA requirements). For the forward link, the TDRSS ground terminal produces the spread RF spectrum by direct sequence PN/PSK modulation using a 3.078 Mchips/sec chip rate PN sequence in the NRZ-M signal format. The chip rate is coherent with the forward link carrier frequency. For the return link, the Spacecraft produces the spread RF spectrum in a similar manner. However, for Modes 1 and 3, I-channel, the PN rate is derived from the received carrier frequency and from a local oscillator for Mode 2.

4.4.1.3.2 Command Channel PN Code

Figure 15 shows the functional configuration for the spread spectrum PN code generator for the TDRS-to-Spacecraft command channel. The PN chip rate of 3.078 Mchips/sec is coherently related to the transmit carrier frequency by the ratio of 31/21,216. The PN sequence is 1023-bit-length Gold code obtained by modulo-2 addition of two synchronous 1023-bit maximal sequences obtained from two 10-stage feedback shift registers. The feedback shift register connections are shown in Figure 15, and the assigned Gold code results from initializing the shift register contents. In the Spacecraft the spread spectrum despreader uses a real-time active correlator and a delay-lock loop to acquire and track the PN sequence, which is used to despread the signal noncoherently.

4.4.1.3.3 TDRSS Range/PN Code

Figure 16 shows the functional configuration for the forward link range signal. The PN code sequence is a truncated 18-stage shift register sequence. The code length is 261,888 bits and an all 1's condition (epoch) is synchronized to the command channel B register initialized state. The chip rate is coherent with that of the command channel PN code. The range is determined by the time difference between the transmitted range channel PN code epoch and the received range channel PN code epoch at the TDRSS ground terminal.

4.4.1.3.4 Return Links

a. Mode 1. Figure 17 shows the functional configuration for the Modes 1 and 3, I- and Q-channel PN codes. The I-channel PN code sequence is a truncated 18-stage shift register sequence. The code length is 261,888 bits and an all-1's condition (epoch) for

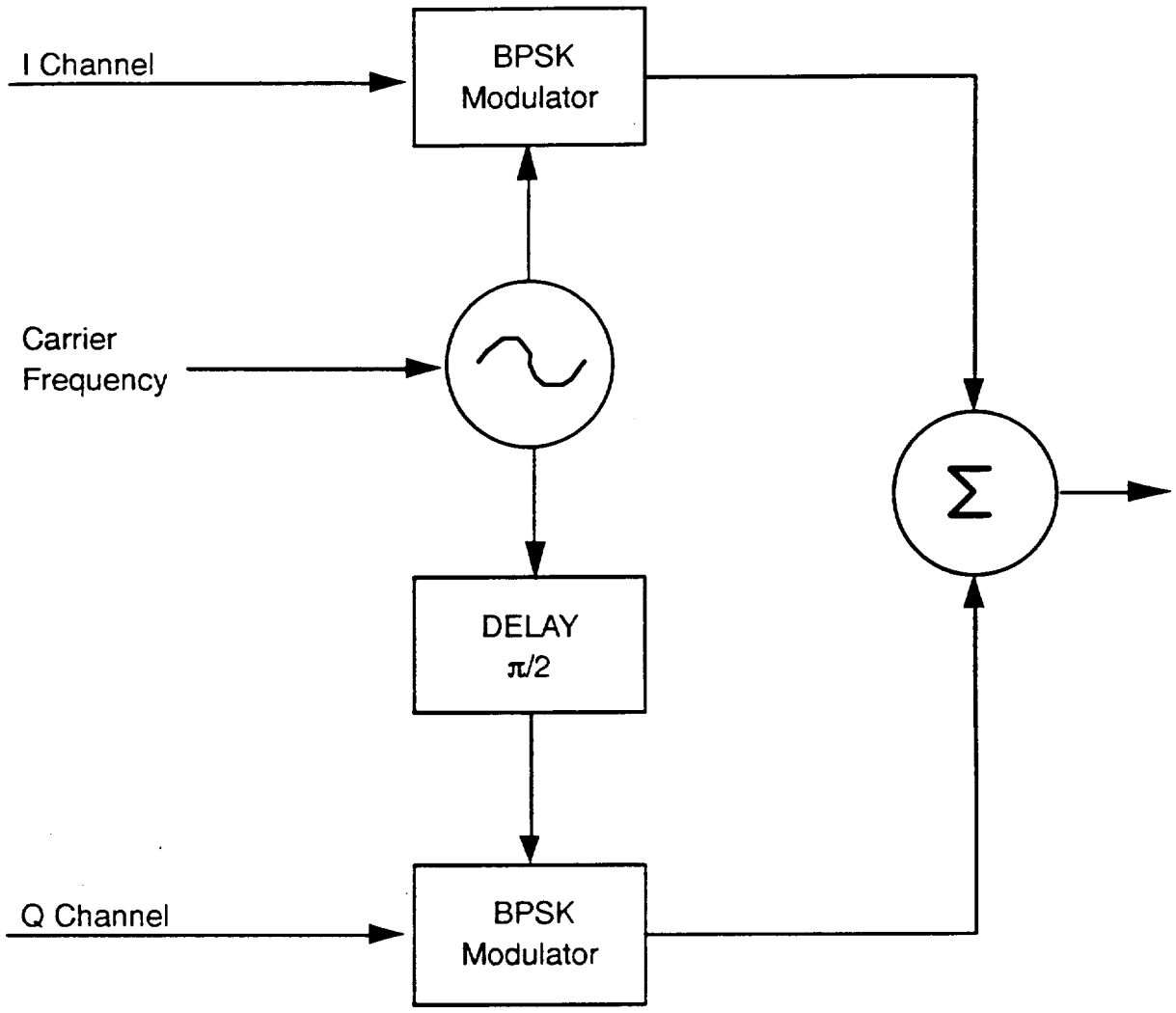

Figure 14. DG2 - Ku-band Return Link Modulation Functional Configuration

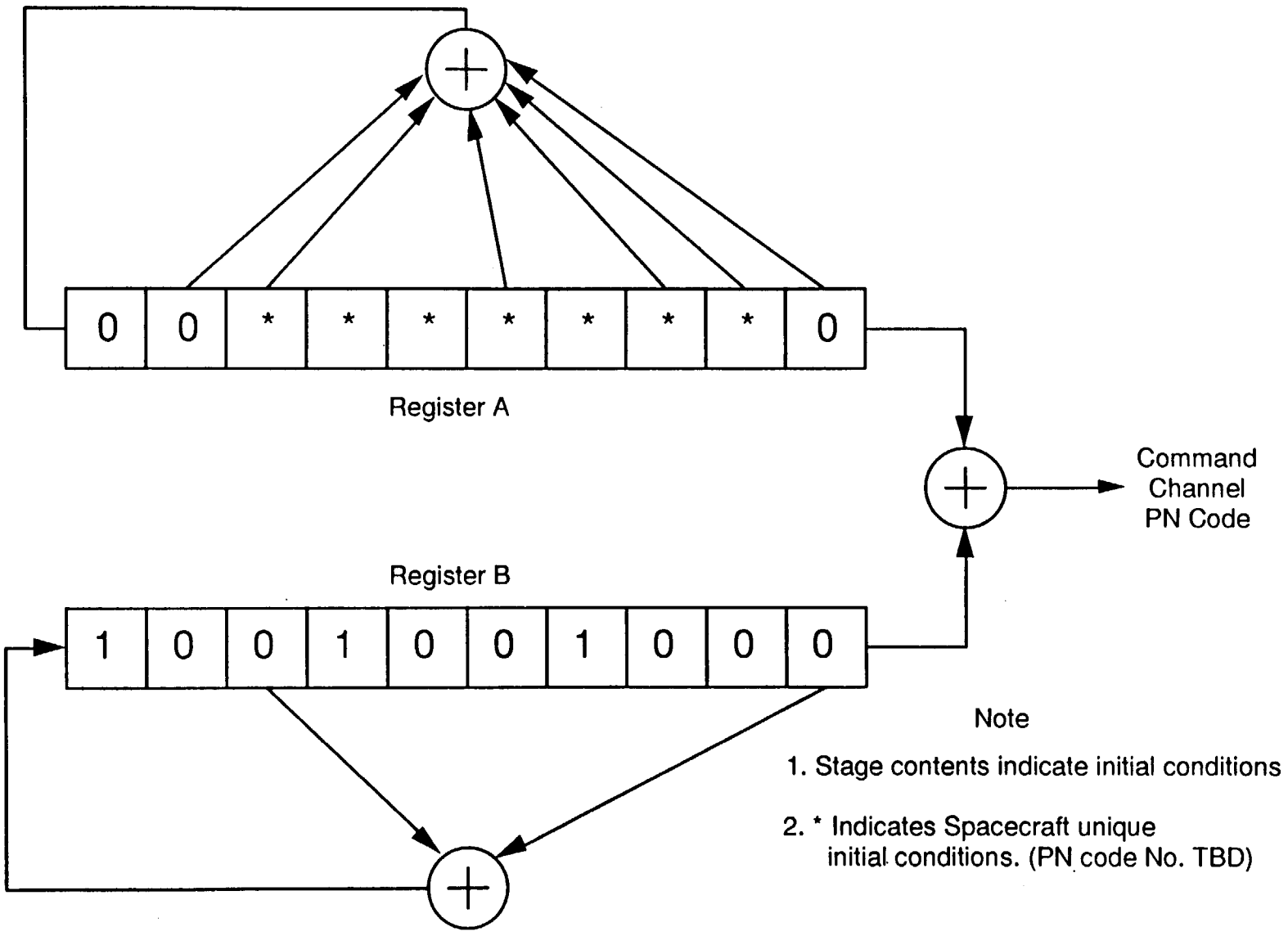

Figure 15. Command Channel PN Code Generator Functional Configuration

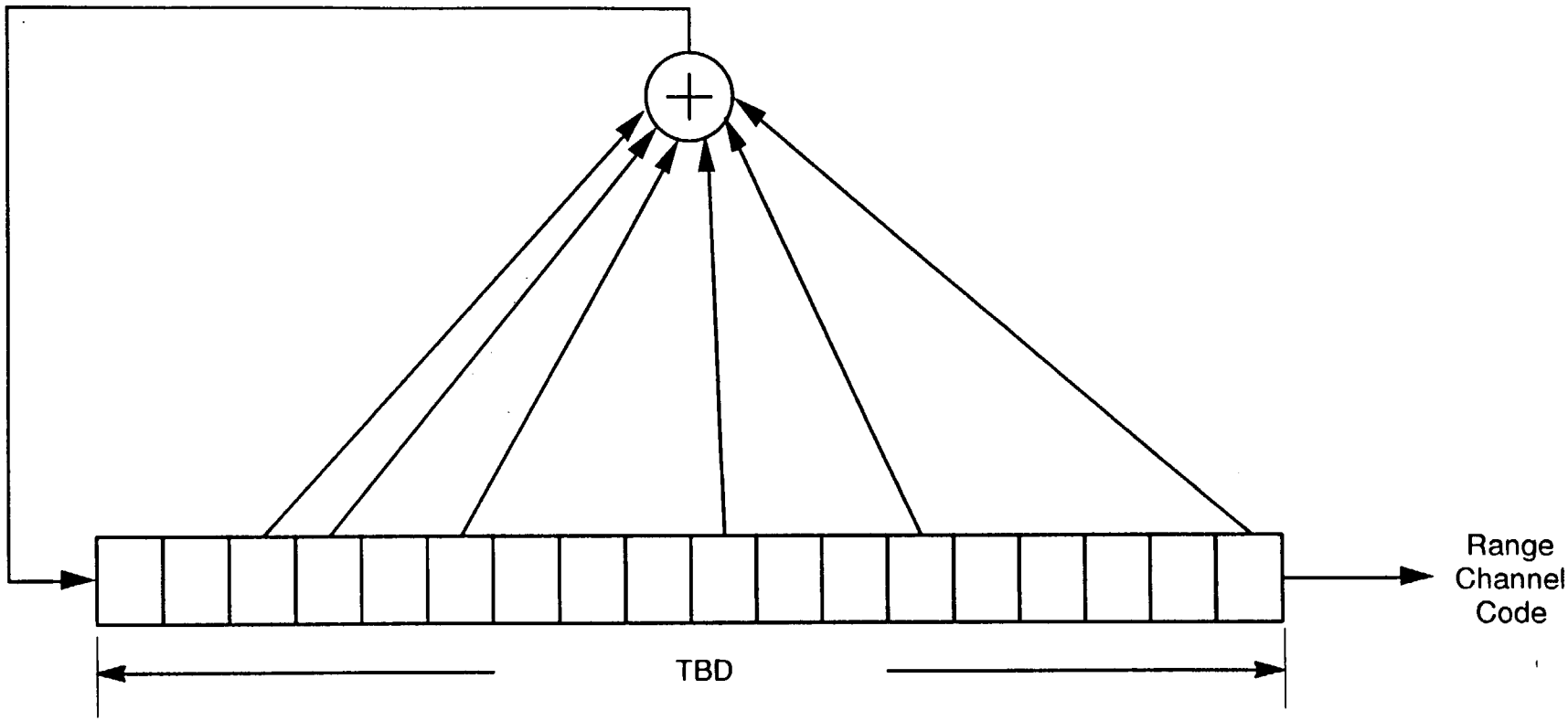

Note: 1. All 1's condition time synchronized to the 1001001000 state of the B register of the command channel PN code generator.

2. PN code No. TBD.

Figure 16. Range Channel PN Code Generator Functional Configuration

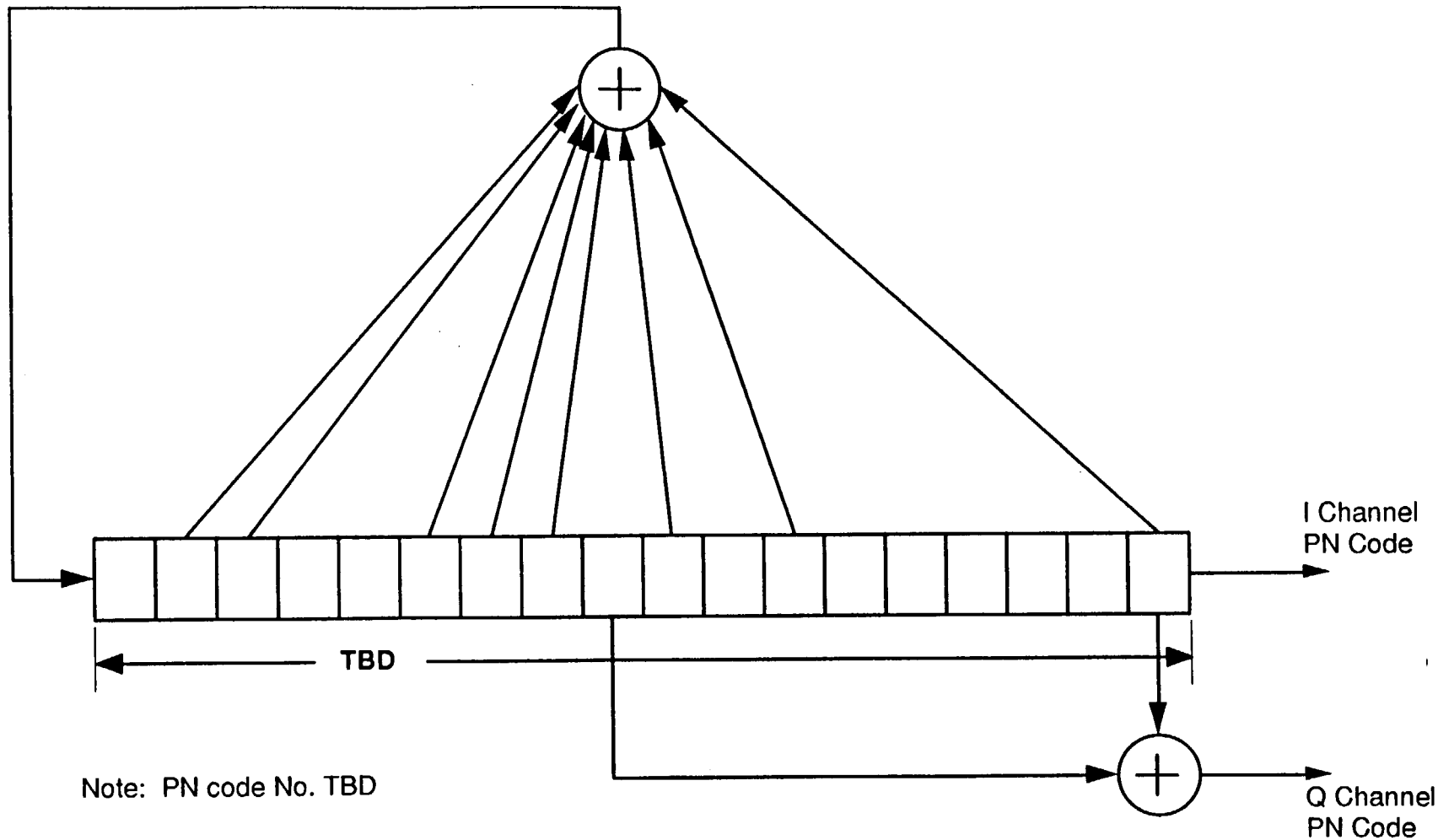

Figure 17. Mode 1 and 3 Return Link PN Code Generator Functional Configuration

the generator shown is synchronized to the epoch for the received range channel PN code. The chip rate is coherently related to the transmit carrier frequency by the ratio of 31/23,040. The Q-channel PN code is a delayed replica of the I-channel PN code and is derived as shown. The chip offset is 37,927(TBR–1) chips.

b. Mode 2. Figure 18 shows the functional configuration for the Mode 2, I- and Q-channel PN codes. The PN sequences are 2047-bit length Gold codes obtained by modulo-2 addition of two synchronous 2047-bit maximal sequences obtained from three 11-stage feedback shift registers as shown. The shift register feedback connections are as shown in Figure 18, and the assigned Gold codes result from initializing shift register A and C as shown.

c. Mode 3. Figure 17 shows the functional configuration for DG1 Mode 3 and the I-channel PN code. The Mode 3 I-channel PN code is identical to the Mode 1 I-channel PN code. The Q-channel is a non-spread spectrum signal and thus has no applied PN coding.

4.4.1.3.5 Despreading

In the TDRSS ground terminal, the PN receiver uses a sequential detector and a delay-lock loop, respectively, to acquire and track the PN sequence which is used to despread the carrier noncoherently.

4.4.1.4 Signal Acquisition and Tracking

4.4.1.4.1 Forward Link

a. Acquisition Performance. The acquisition performance of the EOS–AM Spacecraft for both MA and SSA operations is given in the following paragraphs. Acquisition of the forward link signal is accomplished without carrier command modulation. The acquisition parameters given are valid, with an acquisition probability of 90 percent or greater, provided that the received (at the transponder) Signal to Noise power density ratio (S/N_0) is as indicated and that:

   1. The forward link frequency has been Doppler compensated to within ± 1500 Hz of the actual transponder center frequency.

   2. The rate of change of frequency does not exceed 75 Hz/sec during acquisition.

b. Command Channel (Short Code) Acquisition Time. The 1023 bit short PN code is acquired within 20 seconds after initiation of the forward link transmission provided that the command channel S/N_0 is within 34 dB-Hz to 73 dB–Hz. At an S/N_0 of 37 dB–Hz or greater, the acquisition time will not exceed 7 seconds.

c. Suppressed Carrier Acquisition Time. Phase lock to the suppressed carrier is accomplished within 5 seconds after completion of short code (despread) acquisition.

d. Range Channel (Long Code) Acquisition Time. The 261,888 bit long PN code is acquired within 10 seconds after suppressed carrier lock is established provided the range channel S/N_0 is at least 23 dB-Hz.

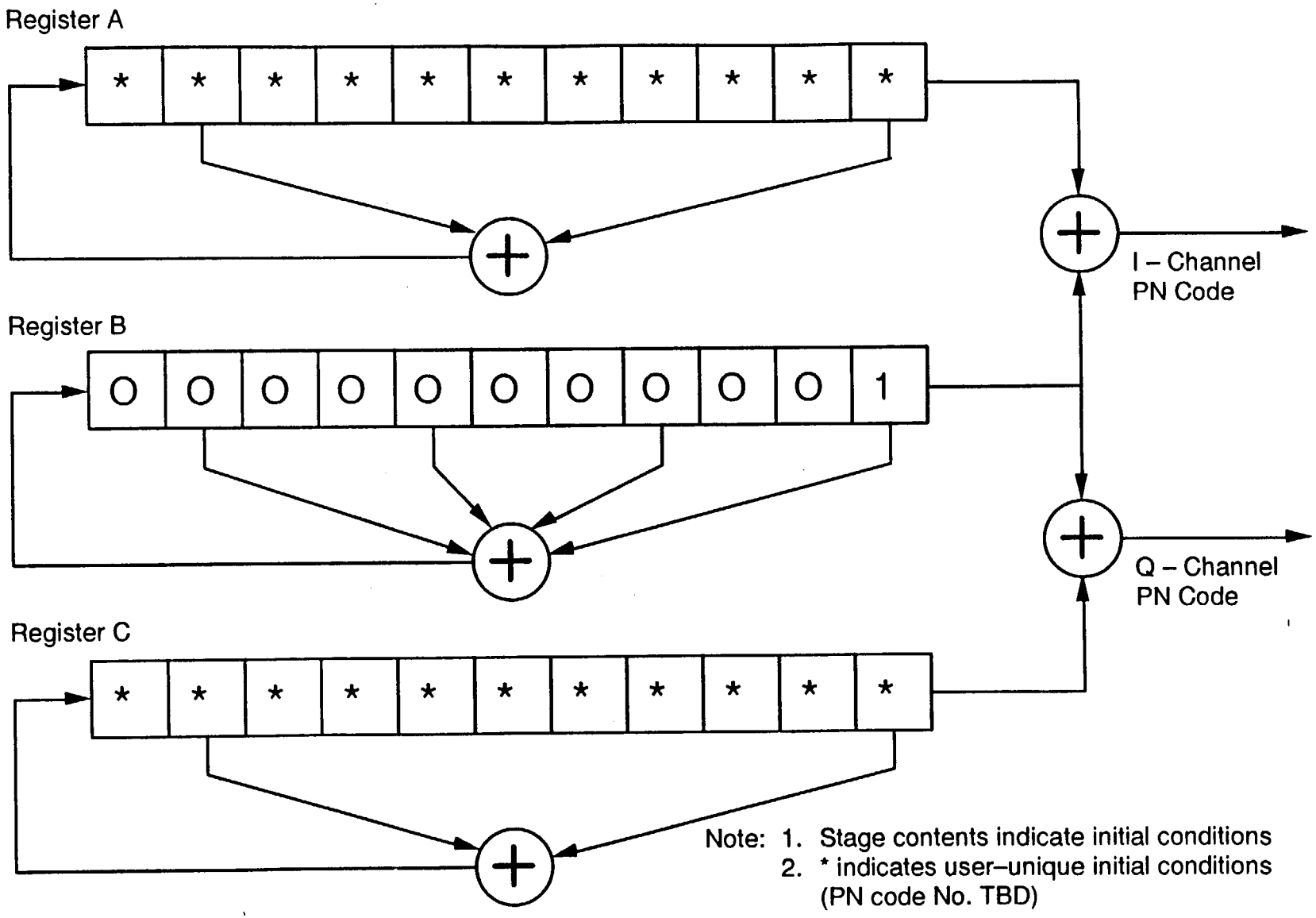

Figure 18. Mode 2 Return Link PN Code Generator Functional Configuration

e. Tracking Threshold. The tracking threshold shall be defined as the lowest S/N_0 where lock can be held to a static forward link signal for 1 minute. The tracking threshold will be 32 dB–Hz for a 125 bps rate, 41 dB–Hz for 1000 bps, and 51 dB–Hz for 10000 bps.

f. Tracking Rates. Once locked to the forward link, the EOS–AM Spacecraft is capable of tracking ± 160 kHz about the assigned center frequency. The maximum carrier cycle slipping rate is 10^{-2} slips per second. The tracking performance assumes that:

1. The received (at the transponder) Signal to Noise power density ratio (S/N_0) is at least 34 dB-Hz for a data rate of 125 bps, 40 dB–Hz for a data rate of 1000 bps, and 50 dB–Hz for 10000 bps.

2. The maximum Doppler rate is 380 Hz/sec for a data rates of 1000 bps and 10000 bps, and 70 Hz/sec for a data rate of 125 bps.

4.4.1.4.2 Return Link

a. Acquisition Performance. TDRSS will acquire the return link with a 90 percent probability, within 15 seconds, provided:

1. The received power (Prec) at TDRS is at least -186.8 dBW for the MA return link and -196.9 dBW for the SSA return link.

2. The acceleration and jerk of the EOS–AM Spacecraft do not exceed 15 m/sec^2 and 0.2 m/sec^3 respectively during coherent modes of operation (Data Group 1, Modes 1 and 3).

3. The EOC defined spacecraft transmit frequency during the noncoherent mode of operation is accurate to ± 700 Hz.

b. Tracking Performance. TDRSS will track the return link continuously provided that the acceleration and jerk of the EOS–AM Spacecraft do not exceed 50 m/sec^2 and 2 m/sec^3 respectively.

4.4.1.5 Doppler Tracking/Compensation

a. Coherent turnaround of the received S-band carrier onboard the Spacecraft is provided for range and two-way Doppler frequency measurement at the TDRSS ground terminal. A regenerated coherent received carrier frequency is translated with a ratio of 240/221 by the S-band transponder for return link transmission. The turnaround carrier frequency at the TDRSS ground terminal contains a two-way Doppler shift and two-way propagation effects which can be used by the ground terminal for the tracking measurements.

b. The TDRSS ground terminal provides continuous Doppler compensation, upon request, of the forward link transmitted carrier frequency and PN chip rate so that the Doppler-shift carrier frequency and PN chip rate arriving at the Spacecraft is, respectively, within ± 1500 Hz of the nominal frequency and ± 2 chips of the nominal chip rate (31/21,216 x carrier frequency).

c. This Doppler compensation accuracy will be provided as long as a new Spacecraft state vector is provided to the TDRSS ground terminal once a day or prior to an equivalent ±700 Hz Doppler error caused by the NASA supplied Spacecraft state vector, and as long as the Spacecraft velocity and acceleration with respect to the TDRS are less than 12 km/s and 15 km/s^2, respectively. These conditions normally correspond to an ephemeris error of 9 seconds. During the Spacecraft maneuver to raise the orbit to mission altitude, a condition will exist such that an ephemeris error of greater than 9 seconds will still meet the preephemeris error will not necessarily be adhered to.

d. If the Doppler compensation service is inhibited, coherent turnaround of the received carrier provides two-way Doppler frequency measurement at the TDRSS ground terminal for use in the tracking function.

e. During TONS operation, ground Doppler compensation shall be turned off during acquisition and tracking.

4.4.2 TDRS RF Signal Characteristics

4.4.2.1 TDRS Forward Link RF Signal Characteristics

TDRS provides the forward link RF signal characteristics within the values shown in Table VI for all forward link services.

4.4.2.2 TDRS Return Link RF Signal Characteristics

The Spacecraft MA, SSA and KSA return link RF signal parameters for the real-time telemetry channel and for the playback channel are listed in Table VII.

4.4.2.3 Frequency Stability

4.4.2.3.1 TDRSS Frequency Stability

The carrier generated by the TDRSS ground terminal and relayed through a TDRS is sufficiently stable to permit spaceborne demodulation and carrier extraction and TDRSS ground terminal two way Doppler shift measurements. The carrier frequency transmitted by the TDRSS ground station and relayed through the TDRS shall have a stability of one part in 10^{12}, excluding atmospheric effects.

4.4.2.3.2 Spacecraft Frequency Stability

The Spacecraft transponder uses a single fixed frequency reference for both the receiver and the transmitter. The frequency reference source is command selectable between an internal temperature compensated crystal oscillator (TCXO) and an external (to the transponder) Master Oscillator (MO). The frequency characteristics for each case are given below.

Table VI. Forward Link Baseband and RF Signal Characteristics

Parameter	MA	SSA
Command Channel Radiated Power Range Channel Radiated Power	10 ± 0.5 dB	10 ± 0.5 dB
Modulator phase imbalance (BPSK only) (peak)	± 3°	± 3°
Modulator gain imbalance	± 0.25 dB	0.25 dB
Relative phase between command and range channels	90 ± 3°	90 ± 3°
Phase nonlinearity (peak)	± 0.12 radian over ± 2.1 MHz	± 0.15 radian over ± 7 MHz
Gain flatness (peak)	± 1.2 dB over ± 2.1 MHz	± 0.8 dB over ± 7 MHz
Gain slope (peak)	± 0.1 dB/MHz	± 0.1 dB/MHz
AM/AM	To be measured	To be measured
AM/PM	≤ 13°/dB	≤ 10°/dB
Spurious PM	≤ 1° rms	≤ 1° rms
Spurious outputs	≥ 27 dBc	≥ 27 dBc
Incidental AM (peak)	≤ 2%	≤ 2%
Phase Noise		
1 Hz - 10 Hz	≤ 1.5° rms	≤ 1.5° rms
10 Hz - 32 Hz	≤ 1.5° rms	≤ 1.5° rms
32 Hz - 1 kHz	≤ 4.0° rms	≤ 4.0° rms
1 kHz - 3 MHz	≤ 2.0° rms	-----
1 kHz - 6 MHz	-----	≤ 2.0° rms
Data transition included PM (At transition density = 100%)	2° rms	2° rms
PN chip jitter (including effects of Doppler compensation	≤ 1° rms	≤ 1° rms
Command/range channel PN chip skew (peak)	≤ 0.01 chip	≤ 0.01 chip
PN chip asymmetry (peak)	≤ 0.01 chip	≤ 0.01 chip
PN chip rate (relative to absolute coherence with carrier rate)	≥ 0.01 Hz peak at PN rate	≥ 0.01 Hz peak at PN rate
Data bit jitter	≤ 1% peak	≤ 1% peak
Data asymmetry	± 3% peak	± 3% peak
Data transition time	≥ 35 nsec, <5%	≥ 8 nsec, <5%

Table VII. Return Link Baseband and RF Signal Parameter Requirements (User Constraints)

Parameter	Requirement	
	MA	SSA
Data asymmetry (peak)	≤3%	≤3%
Data rise time (90% of initial state to 90% of final state)	≤5% of symbol time	≤5% of symbol time
PN chip jitter		
To meet tracking requirements	≤1° rms	≤1° rms
To meet BER requirements	4% peak	4% peak
Data bit jitter (radians)		
To meet BER requirements		
Coded NRZ	≤0.37 rad	≤0.37 rad
Uncoded NRZ	NA	NA
To meet BSR requirements		
BSR = 10E-8		
Uncoded	NA	NA
Rate 1/2	≤0.7 rad	≤0.7 rad
BSR = 10E-10		
Uncoded	NA	NA
Rate 1/2	≤0.6 rad	≤0.6 rad
BSR = 10E-12		
Uncoded	NA	NA
Rate 1/2	≤0.45 rad	≤0.45
BPSK phase imbalance		
DR ≤ 3 kb/s	NA	≤5°
DR > 3 kb/s	NA	≤6°
QPSK phase imbalance		
DG1		
DR ≤ 3 kb/s	≤5°	≤5°
DR > 3 kb/s	≤6°	≤6°
Gain imbalance	≤0.25 dB	≤0.25 dB
Phase nonlinearity (applies for all types of phase nonlinearities) (peak)	≤0.3° over ±2.1 MHz	≤0.3° over ±3.5 MHz
Gain flatness (peak)	≤0.3 dB over ±2.1 MHz	≤0.3 dB over ±3.5 MHz
Gain slope (peak)	≤0.1dB/MHz over ±2.1 MHz	≤0.1dB/MHz over ±3.5 MHz

Note: BSR = Bit Slippage Rate
DR = Data Rate

Table VII. Return Link Baseband and RF Signal Parameters Requirements (User Constraints) (Continued)

	Requirement	
Parameter	**MA**	**SSA**
AM/PM	≤12°/dB	≤12°/dB
Frequency stability (peak)		
1-second average time	≤3 x 10E-9	≤3 x 10E-9
5-hour observation time	≤1 x 10E-7	≤1 x 10E-7
48-hour observation time	≤3 x 10E-7	≤3 x 10E-7
Incidental AM (peak)	≤5%	≤5%
Untracked spurious PM DG1	≤2° rms	≤2° rms
Minimum 3 dB	≥ 4.5 MHz or two times maximum symbol rate, whichever is larger	DG1: ≥ 4.5 MHz or two times maximum symbol rate, whichever is larger
Untracked phase noise (coherent/noncoherent)		
DG1		
DR ≤ 3 kb/s	≤2° rms	≤2° rms
DR >3 kb/s	≤2° rms	≤3° rms
I/Q data skew (relative to requirements for	≤3% rms	≤3% rms
I/Q data synchronization where appropriate (peak)	≤3%	≤3%
I/Q PN skew (relative to 0.5 chip)		
PN chip rate, Mode 2 (relative to absolute	≤0.01 chip	≤0.01 chip
coherence with carrier rate)	≤0.01 Hz peak at PN	≤0.01 Hz peak at PN
PN power suppression noncoherent and	rate	rate
coherent turnaround)	≤0.3 dB	≤0.3 dB
Permissible EIRP variation (without user		
recofiguration message)	≤12 dB	≤12 dB
Permissible rate of EIRP variation		
Maximum user EIRP	≤10 dB/s +33 dBW	≤10 dB/s +45 dBW (Modes 1, 2) +34 dBW (Mode 3)

Table VII. Return Link Baseband and RF Signal Parameters Requirements (User Constraints) (Continued)

	Requirement
Parameter	**KSA**
Data bit transition density (average)	≤25%
Consecutive data bits without a data bit transition	≤64 bits
Data asymmetry (peak)	≤3%
Data rise time (90% of initial state to 90% of final state)	≤5% of data bit duration
Data bit jitter	
To meet BER requirements	
Uncoded NRZ	≤0.31 rad
Uncoded Biø	≤0.10 rad
To meet BSR requirements	
BSR = 10E-8	
Uncoded	≤1.25 rad
BSR = 10E-10	
Uncoded	≤1.25 rad
BSR = 10E-132	
Uncoded	≤1.20 rad
QPSK phase imbalance DG2	
I/Q = 1:1	≤2°
Gain imbalance	≤0.25 dB
Phase nonlinearity (applies for all types of phase nonlinearities (peak)	≤3° over ±80 MHz
Gain flatness (peak)	≤0.3 dB over ±80 MHz
Gain slope	≤0.1 dB/MHz over ±80 MHz
AM/PM	≤12°/dB

Table VII. Return Link Baseband and RF Signal Parameters Requirements (User Constraints) (Continued)

	Requirement
Parameter	**KSA**
Frequency stability (peak) 1-second observation time 5-hour observation time 48-hour observation time	 ≤3 x 10E-9 ≤1 x 10E-7 ≤3 x 10E-7
Incidental AM (peak) At frequencies <2 kHz At frequencies between 2 kHz and 10 kHz At frequencies ≥ 10 kHz	 ≤0.6% ≤3% ≤5%
Untracked spurious PM	≤2°
Minimum 3 dB bandwidth prior to power amplifier	DG2: ≥2 times maximum channel symbol rate
Untracked phase noise (rms) (coherent and noncoherent) DG2 I/Q = 1	 ≤2°
I/Q data skew (relative to requirements for I/Q data synchronization where appropriate) (peak)	≤3°
I/Q PN code chip skew (relative to 0.5 chip	≤0.01 chip
PN code power suppression (noncoherent and coherent)	≤0.3 dB
Axial ratio for autotrack	≤3 dB
Permissible Prec variation (without configuration GCMR from user EOC)	≤12 dB
Permissible rate of Prec variation	≤10 dB/sec
Maximum Prec	-149.2 dBW
Minimum Prec for TDRS KSA	-179.2 dBW or consistent with ADR value, whichever is greater

Notes:

1. The total data bit jitter is the sum of the weighted spurious and random jitter components.

4.4.2.3.2.1 Frequency Characteristics When Using the TCXO

a. Setability. The receiver center frequency is initially set to within ±0.5 ppm of the assigned channel center frequency at a temperature of 24±2°C. The transmitter output frequency in the noncoherent mode is also initially set to within ±0.5 ppm of the assigned channel center frequency at the same temperature.

b. Temperature Stability. At any temperature in the range from -10°C to +50°C, the deviation from the center frequency will not exceed 1 ppm. In the more restricted range of +10°C to +40°C, the frequency deviation will not exceed 0.3 ppm.

c. Short-term Stability. At any temperature in the range from -20°C to +60°C, the rms fractional frequency deviation over a 3-minute period, measured with a 1-second integration time, will not exceed 0.001 ppm.

d. Long-term Stability. At any temperature in the range from 10°C to 40°C, the frequency will not vary more than the following limits with a 10-minute integration time:

   1. ±0.3 ppm over any 48-hour period.
   2. ±0.1 ppm over any 5-hour period.

e. Aging Stability. At any temperature in the range from 10°C to 40°C, the frequency will not vary more than ±3 ppm from the set value in any one year.

4.4.2.3.2.2 Frequency Characteristics When Using the MO

a. Setability. The output frequencie of the MO is 4 MHz. This frequencie is initially set to within ±1 part in 10^8 of the assigned frequencies at a temperature of 24±2°C.

b. Temperature Stability. The MO frequency changes due to temperature variations from −10°C to +50°C will not exceed ±0.5 parts in 10^{12}.

c. Short–term Stability. At a constant temperature between −10°C and +50°C , the rms fractional deviation will not exceed the following values:

Period	RMS Fractional Frequency Deviation
1 second	5×10^{-12}
10 seconds	1×10^{-12}
3 minutes	1×10^{-12}
5 minutes	1×10^{-12}

d. Long–term Stability. After initial stabilization and at a constant temperature between −10°C and +50°C, the fractional frequency variation of the MO will not exceed the following values using a 10 minute measurement averaging time:

Period	Fractional Frequency Drift (df/f)
100 minutes	1×10^{-11}
8 hours	4×10^{-11}
24 hours	1×10^{-10}
48 hours	2×10^{-10}

e. Aging Stability. At a constant temperature between –10°C and +50°C, the frequencies of the MO will not vary more than ± 1 part in 10^8 from the set values in 5 years.

4.4.2.4 Antenna Acquisition and Tracking

The Spacecraft shall provide programmed tracking of the selected TDRS. The Spacecraft shall accept ground commands to switch the selected TDRS and/or select any of the four modes.

a. Open Loop Track Mode - In this mode, the HGA is directed by the Spacecraft to maintain pointing at the selected TDRS satellite, using the predicted orientation of the target in the gimbal coordinate system and the HGA gimbal position encoder data.

b. Slew Mode - In this mode, the antenna is directed by the Spacecraft to move at specified alpha and beta rates for specific durations.

c. Position Command Mode - In the position command mode, the antenna is directed by the Spacecraft to move to achieve some desired orientation, using the HGA gimbal position encoder data.

d. Hold Mode - In this mode, the Spacecraft will maintain the HGA at its present orientation until further commanding instructs it to do otherwise.

4.5 Interface Characteristics Summary

4.5.1 Link Configuration Characteristics

Tables VIII and IX summarize the data channel and RF transmission parameters for each RF link. The following notes apply to these tables:

a. Bit rates and subcarrier and carrier frequencies are specified at the link transmitter and will differ at the receiver by the appropriate Doppler shifts. Error tolerances are also specified at the transmitter and are the errors which must be accommodated by the receiving system in addition to Doppler shifts.

b. The minimum transmitted EIRP is the required minimum signal EIRP toward the receiver and includes the transmitter RF signal power, transmitting circuit losses, transmitting antenna gain towards the receiver (narrow-beam axial gain plus pointing loss, or wide-beam minimum gain over a specified coverage which includes the receiver). The TDRS EIRP also includes the TDRS transponder loss.

c. The required effective power received at the TDRS, referenced at the input to the antenna, is for a BER of 10^{-5} at the required data rate and signal parameters.

Note: This implies total Spacecraft compliance (0 dB constraint loss), a non-RFI environment (0 dB RFI degradation), perfect antenna polarization coupling (0 dB polarization loss), and perfect pointing of the Spacecraft antenna to the TDRS (0 dB pointing loss).

Table VIII. TDRSS to Spacecraft Forward Link Interface Characteristics

Information		Channel Coding	Spectrum Spreading	Carrier		Min. TDRSS EIRP	Antenna Polar.
Channel	Rate			Modulation	Frequency**		
SMA Commands	1 kbps	NRZ-M	PN Code Chip Rate = 3.078 Mcps L = 1023 bits	UQPSK $\frac{Pc}{Pr} = 10 + 0.5$ dB	2106.4 MHz	+34 dBW	LHC (HGA)
SSA Commands	125, 10000 bps	NRZ-M	PN Code Chip Rate = 3.078 Mcps L = 1023 bits	UQPSK $\frac{Pc}{Pr} = 10 + 0.5$ dB	2106.4 MHz	+43.6 dBW	RHC (Omni) RHC or LHC (HGA)
Ranging	N/A*		PN Code L = 261,888 bits				

*Ranging signal is forward to the TDRSS but is not utilized on the KSA Return Link
** Plus ground to EOS–AM Doppler shift

Table IX. Spacecraft to TDRSS Return Link Interface Characteristics

Information		Channel Coding	Spectrum Spreading	Carrier		Required Effective Power[1]	Antenna Polar.	Other Losses dB[2]
Channel	Rate			Modulation	Frequency	(dBW)		
SMA, DG1 Modes 1,2	I=16 kbps Q=16 kbps	NRZ-M Convolutional Differential	PN Code Chip Rate: Mode 1 L = $(2x10^{10}-1)*256$ Mode 2 L = $(2x10^{11}-1)$	SQPN 4:1=Q/I	2287.5 MHz	-174.8	LHC (HGA)	1.0
SSA, DG1 Modes 1,2	I=1 6 kbps Q=16 kbps	NRZ-M Convolutional Differential	PN Code Chip Rate: Mode 1 L = $(2x10^{10}-1)*256$ Mode 2 L = $(2x10^{11}-1)$	SQPN 4:1=Q/I	2287.5 MHz	-184.9	RHC or LHC (HGA)	1.2
SSA, DG1 Modes 1,2	I=1 kbps Q=1 kbps	NRZ-M Convolutional Differential	PN Code Chip Rate: Mode 1 L = $(2x10^{10}-1)*256$ Mode 2 L = $(2x10^{11}-1)$	SQPN 4:1=Q/I	2287.5 MHz	-196.9	RHC (Omni)	1.2
SSA, DG1 Modes 3	I=16 kbps Q=256 kbps	NRZ-M Convolutional Differential Interleave On	PN Code Chip Rate: Mode 1 L = $(2x10^{10}-1)*256$ No PN Code	SQPN 4:1=Q/I PSK	2287.5 MHz	I=-184.9 Q=-173.8	RHC or LHC (HGA)	I, 1.2 Q, 1.1
KSA, DG2	I=75 Mbps Q=75 Mbps	NRZ-M Differential	N/A	SQPSK Balanced Power	15.003 GHz	-164.2	RHC or LHC (HGA)	2.4

1. Required effective power (zero constraint loss, zero RFI loss, zero polarization loss required for 10^{-5} BER at the spacecraft data rate & signal parameter.
2. Other losses including pointing loss, polarization loss, user constraint loss, RFI loss.

DCC032993

4.5.2 Predicted Performance Degradation Due to Partial Compliance with User Constraints

The predicted degradations to the MA and SSA cross-support return link due to non-compliant user constraint parameter values listed in Table VII are listed in Table X.

Table X. S-band Link Channel Constraint Loss

Link	Channel	Constraint Loss
2A,2B	I, Q	0.5 dB
4A, B	I, Q	0.5 dB
4C	I	0.5 dB
4C	Q	0.5 dB
6A, B	I, Q	0.5 dB
Note: Link numbers refer to links described in Table II.		

4.5.3 Predicted Performance Degradation Due to Pulsed RFI

The predicted degradation due to pulsed RFI is summarized in Table XI. RFI degradation at Ku-band is not currently a problem for TDRSS communication links valid for currently available mission models.

Table XI. Predicted Performance Degradation Due to Pulse RFI

Link #	RFI Loss (dB)		Remarks
	I-CH	Q-CH	
2A	0.5 dB	0.5 dB	Worst case, 1.5 degrees off pointing
4A, B	0.7 dB	0.7 dB	1.5 degrees off pointing
4C	0.7 dB	1.1 dB	1.5 degrees off pointing
6A, B	0.7 dB	0.7 dB	1.5 degrees off pointing
Note: Link # refers to the link description in Table II. The predicted degradation applies to both TDRS-E and TDRS-W.			

5 GROUND NETWORK (GN)

5.1 GN Utilization

The existing RF links between Spacecraft and GN are shown in Figure 1. The RF Communications Subsystem interfaces shall be as specified here during the following mission phases:

a. Compatibility

b. Prelaunch

c. In-orbit operations in a backup role to TDRSS in the event a communications system anomaly (TDRSS or EOS–AM) significantly impacts the Spacecraft operational integrity to the extent services are available in the GN at the time required.

5.2 Functional Interface Utilization

The GN consists of GSFC–managed GN stations at Bermuda, and Merritt Island, Florida. The GN stations at Bermuda and Merritt Island have 9 m antennas. The following emergency services are available for GN support to the Spacecraft mission:

S-band

a. GN Support. During a period of interruption to TDRS communications support, the Spacecraft is accommodated by GN through the use of the EOS–AM Spacecraft S–band transponder STDN link mode. Support is dependent upon favorable radio line of sight conditions and when GN antenna elevation angle is greater than 5 degrees above the local mask.

b. Telemetry. Transmission from Spacecraft to GN of digital real-time and stored telemetry data (H/K, SCC Dump, and Stored H/K P/B) will be at a data rates of 16 kbps, and 512 kbps.

c. Commands. Transmission from GN to Spacecraft of command data is formatted in accordance with Spacecraft requirements outlined in Paragraph 4.3. The Spacecraft forward link command data rate is 2000 bps.

5.3 Interface Performance Definition.

Requirements for acceptable performance of the Spacecraft are detailed in Paragraph 3.2 for user-unique requirements. GN emergency support must comply with these standards.

5.4 Interface Characteristics

5.4.1 General

The interface links between the GN ground stations and the Spacecraft shall be:

a. GN to Spacecraft S-band, uplink

b. Spacecraft to GN S-band, downlink

5.4.1.1 Interface Design

The functional design of each of these GN/Spacecraft RF links shall be as specified in this section. Pertinent Communications Subsystem signal design and system performance requirements of the GN and Spacecraft are also specified. The major links parameters and characteristics are shown in Tables XII and XIII.

Table XII. GN-to-Spacecraft S-band Interface Characteristics

Parameter	Value
Command Data Rate	2000 bps
Subcarrier Frequency	16 kHz ± 0.001 percent (Note 1)
Modulation Signal Type	NRZ-M
Carrier Modulation	Phase Modulation, 0.7 radian
Uplink Center Frequency	2106.4 MHz ± GN to EOS–AM Doppler Shift
GN Antenna Diameter	9 Meters
Spacecraft Antenna Polarization	RHC (omni)
GN Minimum EIRP	96.0 dBW

Notes:

1. The 2000 bps command data bit clock will be coherent with the 16 kHz subcarrier.

Table XIII. Spacecraft-to-GN S-band Downlink Interface Characteristics

Link	Data	Rate	Antenna	Format	Modulation
10A	Real-Time H/K	16 kbps	Omni (RHC)	Bi-Phase S	BPSK on 1.024 MHz Subcarrier
10B	Real-Time H/K Diagnostic	16 kbps 16 kbps	Omni (RHC)	Bi-Phase S Bi-Phase S	BPSK on 1.024 MHz Subcarrier Phase Modulated
10C	Real-Time H/K Stored H/K P/B	16 kbps 512 kbps	Omni (RHC)	Bi-Phase S Bi-Phase S	BPSK on 1.024 MHz Subcarrier Phase Modulated

5.4.2 Link Functional Designs and System Constraints

5.4.2.1 General

The EOS–AM Spacecraft S–band Transponder shall be used as the receiver for this link.

5.4.2.2 Uplink Characteristics; GN

This S-band link shall be used to provide command data to the Spacecraft from the GN.

5.4.2.2.1 Functional Diagram

The functional interfaces of this link shall be as shown in Figure 19. THis link contains a command channel and a range rate channel (Doppler). The major link parameters and characteristics are shown in Table XII.

For this link, commands originating at the EOS Operational Control Center (EOC) shall be encoded into the NRZ-M format at the rate of 2 kbps. The Spacecraft Command Encoder (SCE) of the GN ground station shall generate a subcarrier frequency of 16 kHz that is divided by 8 to provide the 2 kHz frequency employed for data buffering in the SCE. The formatted command shall be used to phase shift key (PSK) modulate the 16 kHz subcarrier. The modulated subcarrier will phase modulate (PM) the uplink transmitter at the GN ground station. The transmitter shall operate at a frequency of 2106.4063 MHz.

The EOS–AM Spacecraft S–band transponder provides transmission and reception of standard GN signals via the STDN mode. The transponder acquisition and tracking characteristics are discussed in Section 5.4.4. The uplinked signal shall be received at the Spacecraft, via the omni antennas by the S–band transponder where the PM signal shall be utilized to generate the coherent downlink transmitter frequency and demodulated to provide the baseband signal. The 16 kHz baseband subcarrier signal shall then be demodulated and passed to the on-board command detector in the C&DH subsystem from which command data in the NRZ-M format, a 2 kHz command clock and the enable signal shall be detected and supplied to the command decoder.

Each omni antenna is Right–Hand Circularly Polarized (RHCP). The omni antennas are configured to give S–band spherical coverage of at least 70% for deployment, orbit insertion, and emergency operation. The Spacecraft communicates with the GN through the nadir omni. The spacecraft can also communicate with the GN through the zenith omni antenna should attitude control be lost.

5.4.2.2.2 Signal Characteristics

The bit modulation of the transmitted carrier shall be 2 kbps NRZ-M which has modulated a 16 kHz sinusoidal subcarrier. Additional characteristics of the PSK/PM command mode shall be:

Clock Frequency:	2.0 kHz; accuracy: ±100 ppm
Subcarrier Frequency:	16.0 kHz; accuracy: ±1.6 Hz

The characteristics of GN command functions shall be in accordance with Table XII.

5.4.2.3 Downlink Characteristics; GN

The EOS–AM Spacecraft S–band transponder shall be used as the data transmitted for this link. Baseband characteristics shall be in accordance with Table XIII. The S–band downlink subcarrier shall be used to transmit real–time housekeeping telemetry data from the Spacecraft to the GN. In addition, subcarrier real–time housekeeping data will be transmitted simultaneously with either baseband SCC dump/diagnostic or H/K playback data.

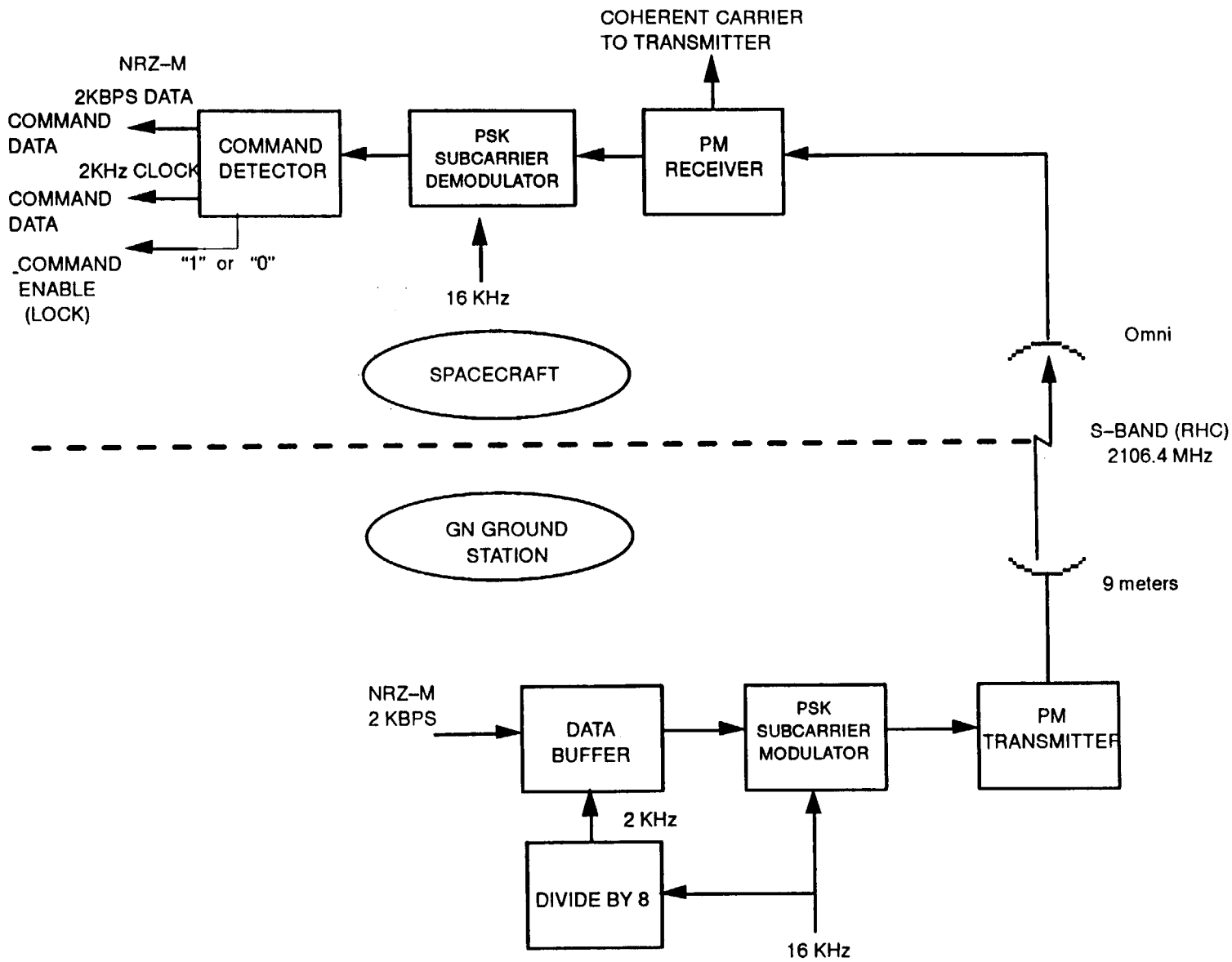

Figure 19. GN to Platform Uplink Configuration

5.4.2.3.1 Functional Diagram

The functional interface of this link shall be as shown in Figure 20. The data shall be received by the EOS–AM Transponder of the Spacecraft in the NRZ-M format and converted there to the Biø-S format. Data from the Spacecraft shall be a dump of the memory in the SCC at a data rate of 16 kbps or a stored housekeeping playback at a data rate of 512 kbps. The real telemetry data at 16 kbps are PSK modulated to the 1.024 MHz subcarrier. The output from the summation shall be used to PM modulate the transponder. The frequency of this transmitter shall be controlled either by a coherent carrier signal from the uplink receiver (see Figure 19) or by the Master Oscillator in the Communication Subsystem. The nominal output frequency of the transmitter shall be 2287.5 MHz (2106.4063 x 240/221) with the exact frequency being determined by the reference source in use.

The GN ground stations shall employ a PM receiver which shall demodulate the transmitted signal. The output of the PM receiver shall supply signals to the PSK demodulator for recovery of the telemetry data. The demodulator output shall be processed by a bit synchronizer to provide telemetry data at the correct bit rate in the NASCOM NRZ-L format. When two data streams are transmitted, another bit synchronizer shall be utilized to obtain the SCC dump or H/K playback data.

5.4.2.3.2 Signal Characteristics

The characteristics of this S-band GN downlink shall be in accordance with Table XIII. Linear phase modulation shall be employed. The carrier shall be modulated by a linearly summed baseband signal and a 1.024 MHz subcarrier. The subcarrier shall be PSK modulated with 16 kbps telemetry data using the Biø-S encoded format. This S-band GN link shall use the S-band omni antennas on the Spacecraft.

5.4.3 Baseband Signal Characteristics

5.4.3.1 General

A description of the command and telemetry baseband characteristics of the Spacecraft is provided in this section.

5.4.3.2 Command Baseband Signal Characteristics

The Spacecraft command baseband signal is an NRZ-L waveform for GN. The command encoder changes the NRZ-L waveform to NRZ-M. The uplink carrier shall be phase modulated by a 16 kHz PSK command subcarrier. Uplink carrier modulation indices (peak phase in radians) shall be:

Modulation Component	Peak Carrier Phase Modulation (radians)
16 kHz Command Subcarrier	0.7 ± 10%

The command data rate is 2000 bps and the data PCM type is NRZ-M after the command encoder. The commands shall be formatted into 4800–bit blocks (**TBR–1**) in the GN throughput block format when transmission to the spacecraft is via the GN or via the NASCOM Compatibility Test Van (CTV).

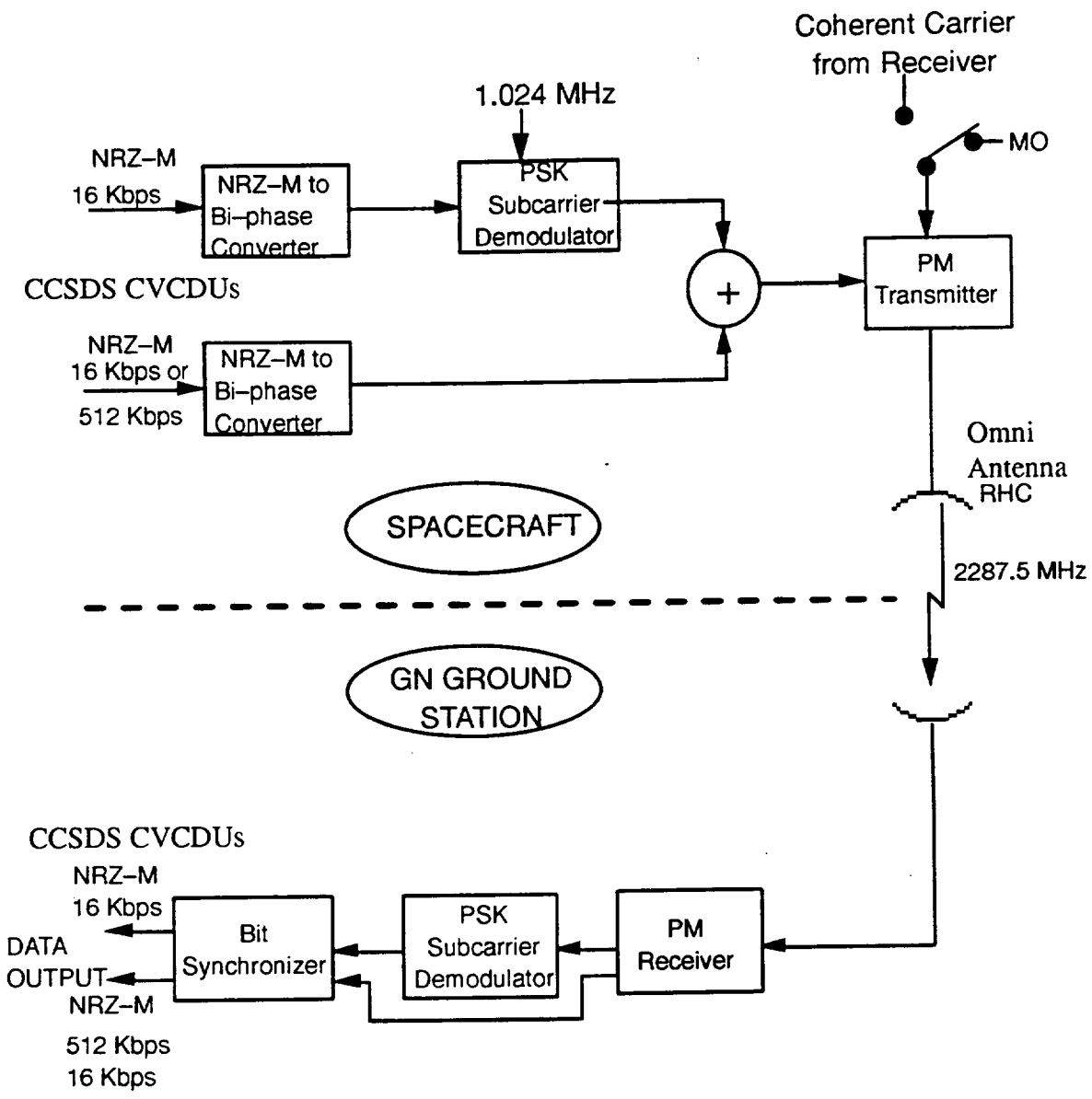

Figure 20. Spacecraft-to-GN S-band Downlink Configuration

5.4.3.3 Telemetry Baseband Signal Characteristics

The telemetry baseband signal for real time housekeeping (16 kbps), SCC computer memory dump (16 kbps), and stored housekeeping playback data (512 kbps) is an NRZ-L waveform at the input of the EOS–AM Spacecraft S–band transponder. The transponder converts the NRZ-M waveform to the Biphase-S waveform. The Downlink carrier shall be phase modulated by the sum of a 1.024 MHz PSK real–time subcarrier, the SCC computer memory dump or the stored housekeeping playback.. Downlink carrier modulation indices shall be:

Modulation Component	Peak Carrier Phase Modulation (radians)
1.024 MHz Real-time TLM Subcarrier	0.8 ± 10% (sinusoid) - Baseband Modulation Present
Baseband Modulation: 16 kbps and 512 kbps Biø-S	1.0 ± 10% (rectangular)

5.4.3.4 Telemetry Formats

The telemetry format shall be in accordance with Section 4.3.6. The goal is a BER not greater than 10^{-7} for the final processed data (at EDOS output). GN does not provide R/S decoding, therefore it will only provide a 10^{-5} BER at the ground station interface. All spacecraft raw data will be sent from the GN stations to the EOS Data Operations System (EDOS) at WSGT via TDMA/ECOM **(TBD–5)**.

5.4.3.5 Ranging Baseband Signal

N/A

5.4.4 Transponder Acquisition and Tracking Characteristics

The transponder used is the EOS–AM S–band transponder, built to GE specification PS20008584 (SP–402). Acquisition and tracking characteristics for the GN (STDN mode) are provided in this section.

5.4.4.1 Uplink

5.4.4.1.1 Acquisition Performance

The S–band Transponder will detect and phase lock to the uplink signal swept at rates between 5 and 35 kHz/sec. The probability of acquisition will be greater than 0.99 in a period corresponding to one sweep period when the carrier to noise density ratio is between 75 and 120 dB–Hz. The receiver will acquire bit synchronization on receipt of an acquisition preamble consisting of 128 bits (or more) of alternating 1 0 data at 2 kbps.

5.4.4.1.2 Tracking Performance

Once locked onto the uplink, the Spacecraft will provide the tracking performance indicated below. This assumes carrier modulation by a 16–kHz subcarrier with a modulation index of up to 0.7 radians peak.

Tracking Range and Rate: With a signal level at the transponder input of at least −112 dBm (C/N_0 = 60 dB–Hz), the Spacecraft will be capable of tracking ± 160 kHz about the assigned center frequency with rate up to 35 kHz/sec.

Tracking Threshold and Reacquisition: The Spacecraft transponder will hold lock, in the absence of frequency dynamics, for 1 minute or longer with a probability greater than 90 percent when the unmodulated signal level at the transponder input is −132.5 dBm (C/N_0 = 40 dB–Hz) or greater. The transponder receiver will reacquire without the aid of ground sweep for signal dropout durations of less than 30 msec. This is applied when tracking an uplink signal with a doppler rate of less than 3 kHz/sec.

5.4.4.2 Downlink

The carrier loop in the GN ground station receiver will automatically acquire and track phase modulated or unmodulated carrier signals received within 100 kHz of the nominal carrier frequency, provided that the received signal level in the preamplifier input in the loop noise bandwidth (200 Hz) is at least −142.3 dBm (C/N_0 = 10 dB) above the loop threshold signal level.

5.4.5 Frequency Stability

5.4.5.1 Receiver Center Frequency Stability

The Spacecraft transponder uses a single fixed frequency reference for both the receiver and the transmitter. The frequency reference source is command selectable between an internal temperature compensated crystal oscillator (TCXO) and an external (to the transponder) Master Oscillator (MO). The frequency characteristics for each case are given in Section 4.4.2.3.2.

6 NOTES

6.1 Abbreviations and Acronyms

AM	Amplitude Modulation
BDA	Bermuda
BER	Bit Error Rate
BPSK	Binary Phase Shift Keying
BSR	Bit Slippage Rate
C&DH	Command and Data Handling
CLTU	Command Link Telemetry Unit
C/No	Carrier-to-Noise Ratio
CCSDS	Consultative Committee for Space Data Systems
CTV	Compatibility Test Van
CW	Continuous Wave
dB	decibel
dBW	decibel relative to 1 watt
DCN	Document Change Notice
DG	Data Group
DR	Data Rate
EDAC	Error Detection And Correction
EDOS	EOS Data Operations System
EIRP	Effective Isotropically Radiated Power
EOC	EOS Operations Center
EOS	Earth Observation System
GHz	Gigahertz
GN	Ground Network
GSFC	Goddard Space Flight Center
GSTDN	Ground Spaceflight Tracking and Data Network
HGA	High Gain Antenna
H/K	Housekeeping Telemetry
ICD	Interface Control Document
KSA	Ku-band Single Access

LHC	Left Hand Circular
MA	Multiple Access
MILA	Merrit Island Launch Area
MO	Master Oscillator
MO&DSD	Mission Operations and Data Systems Directorate
NASA	National Aeronautics and Space Administration
NASCOM	NASA Communications Network
ND CCB	Network Division Configuration Control Board
NRZ	Non Return to Zero
PCD	Periodic Convolutional Deinterleaver
PCI	Periodic Convolutional Interleaver
PERD	Program Element Requirements Document
PM	Phase Modulation
PN	Pseudorandom Noise
PSK	Phase Shift Keying
PSS	Portable Simulation System
QPSK	Quadrature Phase Shift Keying
RF	Radio Frequency
RFI	Radio Frequency Interference
RHC	Right Hand Circular
RMS	Root Mean Square
S/N_o	Signal-to-Noise Density Ratio
SA	Single Access
SCC	Spacecraft Control Computer
SCE	Spacecraft Command Encoder
SMA	S-band Multiple Access
SN	Space Network
SOC	Simulation Operation Center
SQPN	Staggered Quadriphase Pseudorandom Noise
SQPSK	Staggered Quadriphase Shift Keying
SSA	S-band Single Access
STDN	Spaceflight and Data Network

TBD	To Be Determined
TBR	To Be Reviewed
TCXO	Temperature Controlled Crystal Oscillator
TDRS	Tracking and Data Relay Satellite
TDRSS	Tracking and Data Relay Satellite System
UQPSK	Unbalanced Quadriphase Shift Keying
VXO	Voltage Controlled Crystal Oscillator

(This page intentionally left blank.)

APPENDIX I

SPACECRAFT COMMAND AND TELEMETRY LINK CALCULATIONS

(This page intentionally left blank.)

*** FORWARD LINK CALCULATION -- NETWORK SYSTEMS ENGINEER ANALYSIS ***

C.L.A.S.S. ANALYSIS #1 DATE & TIME: 8/14/92 10:37:17 PERFORMED BY: Y. WONG
USERID: MODIFIED EOS LINKID: MA1 RELAY SAT.: TDRS-East

SERVICE:	FREQUENCY:	DATA RATE:	POLARIZATION:	RANGE CASE:	NOMINAL RANGE:	RUN TYPE:
MA	2106.4 MHz	1.000 KBPS	LCP	MINIMUM		ICD

--COHERENT LINK

PARAMETER	VALUE	TOLERANCE	REMARKS
1. RELAY NETWORK EIRP-DBW	34.0	-	STDN 101.2
2. FREE SPACE LOSS-DB	189.5	-	NOTE B
3. POLARIZATION LOSS-DB	.0	.0	NOTE A
4. USER ANTENNA GAIN-DB	23.0	.0	NOTE A
5. USER ANTENNA POINTING LOSS-DB	.0	.0	NOTE A
6. USER PASSIVE LOSS-DB	15.0	.1	NOTE A
7. USER RECEIVED POWER-DB	-147.8	-	SUM 1 THRU 6
8. USER COMPATIBILITY LOSS-DB	.0	.0	NOTE B
9. ATMOSPHERIC LOSS-DB	*	*	NOTE B
10. RFI LOSS-DB	*	-	NOTE B
11. DYNAMICS LOSS-DB	*	*	NOTE B
12. USER EFFECTIVE RECEIVED POWER-DBW	-147.8	-	SUM 7 THRU 11
13. USER NOISE SENSITIVITY-DBW/HZ	-202.5	.3	NOTE A
14. USER RECEIVED-P/NO-DB-HZ	54.7	-	12 MINUS 13
15. USER REQUIRED ACQUISITION-P/NO-DB-HZ	39.5	3.0	NOTE A
16. USER ACQUISITION MARGIN-DB	15.2	-	14 MINUS 15
		-3.4	SUM (NOTE C)
		-3.0	RSS
17. COMMAND TO TOTAL POWER RATIO-DB	-.5	-	NOTE A
18. USER TRANSPONDER LOSS-DB	4.1	1.0	NOTE A
19. RECEIVED COMMAND-P/NO-DB	50.1	-	SUM 14,17,18
20. COMMAND DATA RATE-DB-HZ	30.0	-	NOTE A
21. USER RECEIVED EB/NO-DB	20.1	-	19 MINUS 20
22. USER REQUIRED EB/NO-DB	13.0	1.0	NOTE A
23. EFFECTIVE USER COMMAND MARGIN-DB	7.1	-	21 MINUS 22
		-2.4	SUM (NOTE C)
		-1.4	RSS

NOTE A: PARAMETER VALUE FROM USER PROJECT - SUBJECT TO CHANGE
NOTE B: FROM CLASS ANALYSIS IF COMPUTED
NOTE C: SUM=-ABS(SUM(ABS. VALUES OF TOLERANCES))
* = NOT CONSIDERED IN THE ANALYSIS

*** FORWARD LINK CALCULATION -- NETWORK SYSTEMS ENGINEER ANALYSIS ***

C.L.A.S.S. ANALYSIS #1 DATE & TIME: 8/14/92 10:43:54 PERFORMED BY: Y. WONG
USERID: MODIFIED EDS LINKID: SSA3 RELAY SAT.: TDRS-East

SERVICE:	FREQUENCY:	DATA RATE:	POLARIZATION:	RANGE CASE:	NOMINAL RANGE:	RUN TYPE:
SSA	2106.4 MHz	10.000 KBPS	LCP/RCP	MINIMUM		ICD

--COHERENT LINK

PARAMETER	VALUE	TOLERANCE	REMARKS
1. RELAY NETWORK EIRP-DBW	43.6	-	STDN 101.2
2. FREE SPACE LOSS-DB	189.9	-	NOTE B
3. POLARIZATION LOSS-DB	.0	.0	NOTE A
4. USER ANTENNA GAIN-DB	23.0	.0	NOTE A
5. USER ANTENNA POINTING LOSS-DB	.0	.0	NOTE A
6. USER PASSIVE LOSS-DB	15.0	.1	NOTE A
7. USER RECEIVED POWER-DB	-138.2	-	SUM 1 THRU 6
8. USER COMPATIBILITY LOSS-DB	.0	.0	NOTE B
9. ATMOSPHERIC LOSS-DB	*	*	NOTE B
10. RFI LOSS-DB	*	-	NOTE B
11. DYNAMICS LOSS-DB	*	*	NOTE B
12. USER EFFECTIVE RECEIVED POWER-DBW	-138.2	-	SUM 7 THRU 11
13. USER NOISE SENSITIVITY-DBW/HZ	-202.5	.3	NOTE A
14. USER RECEIVED-P/NO-DB-HZ	64.3	-	12 MINUS 13
15. USER REQUIRED ACQUISITION-P/NO-DB-HZ	39.5	3.0	NOTE A
16. USER ACQUISITION MARGIN-DB	24.8	-	14 MINUS 15
		-3.4	SUM (NOTE C)
		-3.0	RSS
17. COMMAND TO TOTAL POWER RATIO-DB	-.5	-	NOTE A
18. USER TRANSPONDER LOSS-DB	4.1	1.0	NOTE A
19. RECEIVED COMMAND-P/NO-DB	59.7	-	SUM 14,17,18
20. COMMAND DATA RATE-DB-HZ	40.0	-	NOTE A
21. USER RECEIVED EB/NO-DB	19.7	-	19 MINUS 20
22. USER REQUIRED EB/NO-DB	13.0	1.0	NOTE A
23. EFFECTIVE USER COMMAND MARGIN-DB	6.7	-	21 MINUS 22
		-2.4	SUM (NOTE C)
		-1.4	RSS

NOTE A: PARAMETER VALUE FROM USER PROJECT - SUBJECT TO CHANGE
NOTE B: FROM CLASS ANALYSIS IF COMPUTED
NOTE C: SUM=-ABS(SUM(ABS. VALUES OF TOLERANCES))
* = NOT CONSIDERED IN THE ANALYSIS

1 *** FORWARD LINK CALCULATION -- NETWORK SYSTEMS ENGINEER ANALYSIS ***

C.L.A.S.S. ANALYSIS #1 DATE & TIME: 8/14/92 10:49:48 PERFORMED BY: Y. WONG

USERID: MODIFIED EOS LINKID: SSA5 RELAY SAT.: TDRS-East

SERVICE:	FREQUENCY:	DATA RATE:	POLARIZATION:	RANGE CASE:	NOMINAL RANGE:	RUN TYPE:
SSA	2106.4 MHz	.125 KBPS	LCP	MAXIMUM		ICD

--COHERENT LINK

PARAMETER	VALUE	TOLERANCE	REMARKS
1. RELAY NETWORK EIRP-DBW	43.6	-	STDN 101.2
2. FREE SPACE LOSS-DB	191.9	-	NOTE B
3. POLARIZATION LOSS-DB	.0	.0	NOTE A
4. USER ANTENNA GAIN-DB	-1.4	.0	NOTE A
5. USER ANTENNA POINTING LOSS-DB	.0	.0	NOTE A
6. USER PASSIVE LOSS-DB	6.5	.0	NOTE A
7. USER RECEIVED POWER-DB	-156.2	-	SUM 1 THRU 6
8. USER COMPATIBILITY LOSS-DB	.0	.0	NOTE B
9. ATMOSPHERIC LOSS-DB	*	*	NOTE B
10. RFI LOSS-DB	*	-	NOTE B
11. DYNAMICS LOSS-DB	*	*	NOTE B
12. USER EFFECTIVE RECEIVED POWER-DBW	-156.2	-	SUM 7 THRU 11
13. USER NOISE SENSITIVITY-DBW/HZ	-202.5	.3	NOTE A
14. USER RECEIVED-P/NO-DB-HZ	46.3	-	12 MINUS 13
15. USER REQUIRED ACQUISITION-P/NO-DB-HZ	39.5	3.0	NOTE A
16. USER ACQUISITION MARGIN-DB	6.8	-	14 MINUS 15
		-3.3	SUM (NOTE C)
		-3.0	RSS
17. COMMAND TO TOTAL POWER RATIO-DB	-.5	-	NOTE A
18. USER TRANSPONDER LOSS-DB	5.1	1.0	NOTE A
19. RECEIVED COMMAND-P/NO-DB	40.7	-	SUM 14,17,18
20. COMMAND DATA RATE-DB-HZ	21.0	-	NOTE A
21. USER RECEIVED EB/NO-DB	19.7	-	19 MINUS 20
22. USER REQUIRED EB/NO-DB	13.0	1.0	NOTE A
23. EFFECTIVE USER COMMAND MARGIN-DB	6.7	-	21 MINUS 22
		-2.3	SUM (NOTE C)
		-1.4	RSS

NOTE A: PARAMETER VALUE FROM USER PROJECT - SUBJECT TO CHANGE
NOTE B: FROM CLASS ANALYSIS IF COMPUTED
NOTE C: SUM=-ABS(SUM(ABS. VALUES OF TOLERANCES))
* = NOT CONSIDERED IN THE ANALYSIS

*** RETURN LINK CALCULATION -- NETWORK SYSTEMS ENGINEER ANALYSIS ***

C.L.A.S.S. ANALYSIS #0 DATE & TIME: 8/17/92 14: 8:11 PERFORMED BY: Y. WONG

USERID: MODIFIED EDS LINKID: MB2A RELAY SAT.: IDSS-East RELAY GND TERM: WSGT

SERVICE:	FREQUENCY:	DATA GROUP/MODE:	POLARIZATION:	GAIN CASE:	NOMINAL RANGE:	SUN TYPE:
MA	2287.5 MHz	DG-1 MODE-1	LCP	MAXIMUM		ICD

I CHANNEL	Q CHANNEL
DATA RATE = 16.00 KBPS	DATA RATE = 16.00 KBPS
MOD 2 ADDED TO PN	MOD 2 ADDED TO PN
DATA TYPE = NRZ-M	DATA TYPE = NRZ-M
RATE 1/2 CODED	RATE 1/2 CODED

PARAMETER	WORST CASE RUN I CHAN.	WORST CASE RUN Q CHAN.	TOLERANCE I CHAN.	TOLERANCE Q CHAN.	REMARKS
1. USER TRANSMITTER POWER-DBW	6.5	6.5	-.5	-.5	NOTE A
2. USER PASSIVE LOSS-DB	3.8	3.8	-.1	-.1	NOTE A
3. USER ANTENNA GAIN-DBI	24.0	24.0	-.2	-.2	NOTE A
4. USER POINTING LOSS-DB	.0	.0	.0	.0	NOTE A
5. POLARIZATION LOSS-DB	.0	.0	.0	.0	NOTE A
6. USER DATA/TOTAL POWER RATIO-DB	-7.0	-1.0			NOTE A
7. FREE SPACE LOSS-DB	192.6	192.6			NOTE B
8. RELAY NETWORK RECEIVED POWER-UNITY GAIN-DBW	-171.9	-166.9			SUM 1 THRU 7
9. USER CONSTRAINT LOSS-DB	.5	.5	.0	.0	NOTE B
10. OTHER LOSSES-DB	*	*	*	*	NOTE C
11. RFI ENVIRONMENT LOSS-DB	.5	.5			NOTE D
12. DESIRED EFFECTIVE POWER-UNITY-DBW	-173.9	-167.9			SUM 8 THRU 11
13. REQUIRED EFFECTIVE POWER-UNITY-DBW	-174.8	-174.8			STDN 101.2
14. EFFECTIVE USER MARGIN-DB	.9	6.9			12 MINUS 13
			-.8	-.8	SUM
			-.5	-.5	RSS

NOTE A--FROM REFERENCE-SUBJECT TO CHANGE BY USER
NOTE B--FROM CLASS ANALYSIS
NOTE D--FROM CLASS ANALYSIS-NO DFF POINTING-WORST CASE

NOTE C--FROM CLASS ANALYSIS IF COMPUTED

CONTAINS DYNAMICS LOSS-DB = *, *
ATMOSPHERICS LOSS-DB = *, *
MULTIPATH LOSS-DB = *, *

*--NOT APPLICABLE OR NOT COMPUTED

RETURN LINK COMPATIBILITY CHECK:

!!! The link is FULLY COMPATIBLE !!!

*** RETURN LINK CALCULATION -- NETWORK SYSTEMS ENGINEER ANALYSIS ***

C.L.A.S.S. ANALYSIS #0 DATE & TIME: 8/17/92 14:11: 4 PERFORMED BY: Y. WONG

USERID: MODIFIED.IDS LINKID: SS9408 RELAY SAT.: IDBS-East RELAY GND TERM: WSGI

SERVICE:	FREQUENCY:	DATA CODE/MODE:	POLARIZATION:	RANGE CASE:	NOMINAL RANGE:	RUN TYPE:
SSA	2287.5 MHz	IG-1 MODE-1	LCP/RCP	MAXIMUM		ICD

I CHANNEL	O CHANNEL
DATA RATE = 16.00 KBPS	DATA RATE = 16.00 KBPS
MOD 2 ADDED TO PN	MOD 2 ADDED TO PN
DATA TYPE = NRZ-M	DATA TYPE = NRZ-M
RATE 1/2 CODED	RATE 1/2 CODED

PARAMETER	WORST CASE RUN I CHAN.	WORST CASE RUN O CHAN.	TOLERANCE I CHAN.	TOLERANCE O CHAN.	REMARKS
1. USER TRANSMITTER POWER-DBW	6.5	6.5	-.5	-.5	NOTE A
2. USER PASSIVE LOSS-DB	3.8	3.8	-.1	-.1	NOTE A
3. USER ANTENNA GAIN-DBI	24.0	24.0	-.2	-.2	NOTE A
4. USER POINTING LOSS-DB	.0	.0	.0	.0	NOTE A
5. POLARIZATION LOSS-DB	.0	.0	.0	.0	NOTE A
6. USER DATA/TOTAL POWER RATIO-DB	-7.0	-1.0			NOTE A
7. FREE SPACE LOSS-DB	192.6	192.6			NOTE B
8. RELAY NETWORK RECEIVED POWER-UNITY GAIN-DBW	-172.9	-166.9			SUM 1 THRU 7
9. USER CONSTRAINT LOSS-DB	.5	.5	.0	.0	NOTE B
10. OTHER LOSSES-DB	*	*	*	*	NOTE C
11. RFI ENVIRONMENT LOSS-DB	.7	.7			NOTE D
12. DEGRADED EFFECTIVE POWER-UNITY-DBW	-174.1	-168.1			SUM 8 THRU 11
13. REQUIRED EFFECTIVE POWER-UNITY-DBW	-184.9	-164.9			STDN 101.2
14. EFFECTIVE USER MARGIN-DB	10.8	16.8			12 MINUS 13
			-.8	-.8	SUM
			-.5	-.5	RSS

NOTE A--FROM REFERENCE-SUBJECT TO CHANGE BY USER
NOTE B--FROM CLASS ANALYSIS
NOTE D--FROM CLASS ANALYSIS-1.5 DEG OFF POINTING

NOTE C--FROM CLASS ANALYSIS IF COMPUTED

CONTAINS DYNAMICS LOSS-DB = *, *
ATMOSPHERICS LOSS-DB = *, *
MULTIPATH LOSS-DB = *, *

*--NOT APPLICABLE OR NOT COMPUTED

RETURN LINK COMPATIBILITY CHECK:

....The link is ESSENTIALLY COMPATIBLE....

*** RETURN LINK CALCULATION -- NETWORK SYSTEMS ENGINEER ANALYSIS ***

C.L.A.S.S. ANALYSIS #0 DATE & TIME: 8/17/92 14:14: 5 PERFORMED BY: Y. WONG

USERID: MODIFIED ESS LINKID: SSSAC RELAY SAT.: TDRS-East RELAY GND TERM: WSGT

SERVICE:	FREQUENCY:	DATA RATE/MODE:	POLARIZATION:	RANGE CASE:	NOMINAL RANGE:	RUN TYPE:
SSA	2287.5 MHz	DS-1 MODE-3	LCP/RCP	MAXIMUM		ICD

I CHANNEL

DATA RATE = 15.00 KBPS
MOD 2 ADDED TO PN
DATA TYPE = NRZ-M
RATE 1/2 CODED

Q CHANNEL

DATA RATE = 256.00 KBPS
MOD TYPE = PSK
DATA TYPE = NRZ-M
RATE 1/2 CODED
INTERLEAVED

PARAMETER	WORST CASE RUN I CHAN.	WORST CASE RUN Q CHAN.	TOLERANCE I CHAN.	TOLERANCE Q CHAN.	REMARKS
1. USER TRANSMITTER POWER-DBW	6.5	6.5	-.5	-.5	NOTE A
2. USER PASSIVE LOSS-DB	3.8	3.8	-.1	-.1	NOTE A
3. USER ANTENNA GAIN-DBI	24.0	24.0	-.2	-.2	NOTE A
4. USER POINTING LOSS-DB	.0	.0	.0	.0	NOTE A
5. POLARIZATION LOSS-DB	.0	.0	.0	.0	NOTE A
6. USER DATA/TOTAL POWER RATIO-DB	-7.0	-1.0			NOTE A
7. FREE SPACE LOSS-DB	192.6	192.6			NOTE B
8. RELAY NETWORK RECEIVED POWER-UNITY GAIN-DBW	-172.9	-166.9			SUM 1 THRU 7
9. USER CONSTRAINT LOSS-DB	.5	.5	.0	.0	NOTE B
10. OTHER LOSSES-DB	*	*	*	*	NOTE C
11. RFI ENVIRONMENT LOSS-DB	.7	1.1			NOTE D
12. DEGRADED EFFECTIVE POWER-UNITY-DBW	-174.1	-168.5			SUM 8 THRU 11
13. REQUIRED EFFECTIVE POWER-UNITY-DBW	-184.9	-173.8			STDN 101.2
14. EFFECTIVE USER MARGIN-DB	10.8	5.2			12 MINUS 13
			-.9	-.8	SUM
			-.5	-.5	RSS

NOTE A--FROM REFERENCE-SUBJECT TO CHANGE BY USER
NOTE B--FROM CLASS ANALYSIS
NOTE D--FROM CLASS ANALYSIS-1.5 DEG OFF POINTING

NOTE C--FROM CLASS ANALYSIS IF COMPUTED

CONTAINS DYNAMICS LOSS-DB = *, *
ATMOSPHERICS LOSS-DB = *, *
MULTIPATH LOSS-DB = *, *
*--NOT APPLICABLE OR NOT COMPUTED

RETURN LINK COMPATIBILITY CHECK:

....The link is ESSENTIALLY COMPATIBLE....

*** RETURN LINK CALCULATION -- NETWORK SYSTEMS ENGINEER ANALYSIS ***

C.L.A.S.S. ANALYSIS #0 DATE & TIME: 8/17/92 14:18:14 PERFORMED BY: Y. WONG

USERID: MODIFIED EOS LINKID: SSA6AB RELAY SAT.: TDRS-East RELAY GND TERM: WSGT

SERVICE:	FREQUENCY:	DATA GROUP/MODE:	POLARIZATION:	RANGE CASE:	NOMINAL RANGE:	RUN TYPE:
SSA	2287.5 MHz	DG-1 MODE-1	LCP/RCP	MAXIMUM		ICD

I CHANNEL	Q CHANNEL
DATA RATE = 1.00 KBPS	DATA RATE = 1.00 KBPS
MOD 2 ADDED TO PN	MOD 2 ADDED TO PN
DATA TYPE = NRZ-M	DATA TYPE = NRZ-M
RATE 1/2 CODED	RATE 1/2 CODED

PARAMETER	WORST CASE RUN		TOLERANCE		REMARKS
	I CHAN.	Q CHAN.	I CHAN.	Q CHAN.	
1. USER TRANSMITTER POWER-DBW	6.5	6.5	-.5	-.5	NOTE A
2. USER PASSIVE LOSS-DB	3.5	3.5	-.1	-.1	NOTE A
3. USER ANTENNA GAIN-DBI	-2.1	-2.1	.0	.0	NOTE A
4. USER POINTING LOSS-DB	.0	.0	.0	.0	NOTE A
5. POLARIZATION LOSS-DB	.0	.0	.0	.0	NOTE A
6. USER DATA/TOTAL POWER RATIO-DB	-7.0	-1.0			NOTE A
7. FREE SPACE LOSS-DB	192.6	192.6			NOTE B
8. RELAY NETWORK RECEIVED POWER-UNITY GAIN-DBW	-198.7	-192.7			SUM 1 THRU 7
9. USER CONSTRAINT LOSS-DB	.5	.5	.0	.0	NOTE B
10. OTHER LOSSES-DB	*	*	*	*	NOTE C
11. RFI ENVIRONMENT LOSS-DB	.7	.7			NOTE D
12. DEGRADED EFFECTIVE POWER-UNITY-DBW	-199.9	-193.9			SUM 8 THRU 11
13. REQUIRED EFFECTIVE POWER-UNITY-DBW	-196.9	-196.9			STDN 101.2
14. EFFECTIVE USER MARGIN-DB	-3.0	3.0			12 MINUS 13
			-.6	-.6	SUM
			-.5	-.5	RSS

NOTE A--FROM REFERENCE-SUBJECT TO CHANGE BY USER
NOTE B--FROM CLASS ANALYSIS
NOTE D--FROM CLASS ANALYSIS-1.5 DEG OFF POINTING

NOTE C--FROM CLASS ANALYSIS IF COMPUTED

CONTAINS DYNAMICS LOSS-DB = *.*
ATMOSPHERICS LOSS-DB = *.*
MULTIPATH LOSS-DB = *.*

*--NOT APPLICABLE OR NOT COMPUTED

RETURN LINK COMPATIBILITY CHECK:

....The link is ESSENTIALLY COMPATIBLE....

*** RETURN LINK CALCULATION -- NETWORK SYSTEMS ENGINEER ANALYSIS ***

C.L.A.S.S. ANALYSIS #0 DATE & TIME: 8/17/92 14: 4:26 PERFORMED BY: Y. WONG

USERID: MODIFIED EGS LINKID: KSAB RELAY SAT.: TDRS-East RELAY GND TERM: WSGT

SERVICE:	FREQUENCY:	DATA GROUP/MODE:	POLARIZATION:	RANGE CASE:	NOMINAL POWER:	CON TYPE:
KSA	[illegible] MHz	DG-2 MODE-1	RCP/LCP	MAXIMUM		ICD

I CHANNEL	Q CHANNEL
DATA RATE = 75000.00 KBPS	DATA RATE = 75000.00 KBPS
MOD TYPE = SOPSK	MOD TYPE = SOPSK
DATA TYPE = NRZ-M	DATA TYPE = NRZ-M
RATE 1/2 CODED	RATE 1/2 CODED

PARAMETER	WORST CASE RUN I CHAN.	WORST CASE RUN Q CHAN.	TOLERANCE I CHAN.	TOLERANCE Q CHAN.	REMARKS
1. USER TRANSMITTER POWER-DBW	11.8	11.8	-.5	-.5	NOTE A
2. USER PASSIVE LOSS-DB	1.8	1.8	.0	.0	NOTE A
3. USER ANTENNA GAIN-DBI	44.1	44.1	-.1	-.1	NOTE A
4. USER POINTING LOSS-DB	1.8	1.8	.0	.0	NOTE A
5. POLARIZATION LOSS-DB	.1	.1	.0	.0	NOTE A
6. USER DATA/TOTAL POWER RATIO-DB	-3.0	-3.0			NOTE A
7. FREE SPACE LOSS-DB	208.9	208.9			NOTE B
8. RELAY NETWORK RECEIVED POWER-UNITY GAIN-DBW	-159.7	-159.7			SUM 1 THRU 7
9. USER CONSTRAINT LOSS-DB	.5	.5	.0	.0	NOTE B
10. OTHER LOSSES-DB	*	*	*	*	NOTE C
11. RFI ENVIRONMENT LOSS-DB	.0	.0			NOTE D
12. DEGRADED EFFECTIVE POWER-UNITY-DBW	-160.2	-160.2			SUM 8 THRU 11
13. REQUIRED EFFECTIVE POWER-UNITY-DBW	-164.2	-164.2			SUM 101.2
14. EFFECTIVE USER MARGIN-DB	4.0	4.0			12 MINUS 13
			-.6	-.6	SUM
			-.5	-.5	RSS

NOTE A--FROM REFERENCE-SUBJECT TO CHANGE BY USER
NOTE B--FROM CLASS ANALYSIS
NOTE D--FROM CLASS ANALYSIS

NOTE C--FROM CLASS ANALYSIS IF COMPUTED

CONTAINS DYNAMICS LOSS-DB = * , *
ATMOSPHERICS LOSS-DB = * , *
MULTIPATH LOSS-DB = * , *

*--NOT APPLICABLE OR NOT COMPUTED

RETURN LINK COMPATIBILITY CHECK:

!!! The link is FULLY COMPATIBLE !!!

TABLE A - 1 UPLINK
EOS-AM
FREQUENCY - 2106.400 MHZ
GROUND ANTENNA - 9-M USB at the GN
POWER - .2000 K WATTS
COMMAND MODE ONLY - PCM(NRZ)/PSK/PM - S.C. FREQ =16 KHZ -
DATA RATE = 2 KBPS.

PARAMETERS	UNITS	VALUES (MAX RNG: 2574.48 KM 5.0 EL)	VALUES (MIN RNG: 705.00 KM 90.0 EL)	ESTIMATED TOLERANCES DB FAV	ESTIMATED TOLERANCES DB ADV
EFFECTIVE RADIATED POWER	DBM	96.0	96.0	1.0	-1.0
FREE SPACE DISPERSION LOSS	DB	-167.1	-155.9	.0	.0
ATMOSPHERIC LOSS	DB	-.4	.0	.0	.0
POLARIZATION LOSS	DB	-.3	-.3	.0	.0
SPACECRAFT ANTENNA GAIN	DBI	-1.4	-1.4	.0	.0
SPACECRAFT PASSIVE LOSS	DB	-6.8	-6.6	.7	-.7
MAXIMUM TOTAL RECEIVED POWER	DBM	-80.0	-68.4	1.2	-1.2
SPACECRAFT ANTENNA NULL DEPTH	DB	.0	.0	.0	.0
MINIMUM TOTAL RECEIVED POWER	DBM	-80.0	-68.4	1.2	-1.2
SYSTEM NOISE DENSITY	DBM/HZ	-172.5	-172.5	.0	2.0
IF NOISE BANDWIDTH(3000.000 KHZ)	DB-HZ	64.8	64.8	.0	.0
IF NOISE POWER	DBM	-107.7	-107.7	.0	2.0
IF SNR	DB	27.7	39.3	1.2	-2.3
REQUIRED SNR	DB	.0	.0	.0	.0
AVAILABLE IF MARGIN	DB	27.7	39.3	1.2	-2.3
REQUIRED PERFORMANCE MARGIN	DB	3.0	3.0	.0	.0
IF NET MARGIN	DB	24.7	36.3	1.2	-2.3
CARRIER CHANNEL					
CARRIER/TOTAL POWER	DB	-1.1	-1.1	.1	-.1
RECEIVED CARRIER POWER	DBM	-81.1	-69.5	1.2	-1.2
CARRIER LOOP NOISE BW(800. HZ)	DB-HZ	29.0	29.0	.0	.0
NOISE POWER	DBM	-143.5	-143.5	.0	2.0
CARRIER/NOISE	DB	62.4	74.1	1.2	-2.3
REQUIRED CARRIER/NOISE	DB	20.0	20.0	.0	.0
AVAILABLE CARRIER MARGIN	DB	42.4	54.1	1.2	-2.3
REQUIRED PERFORMANCE MARGIN	DB	3.0	3.0	.0	.0
NET MARGIN	DB	39.4	51.1	1.2	-2.3
COMMAND CHANNEL (PCM/PSK/PM)					
COMMAND/TOTAL POWER(MI= .70 RAD)	DB	-6.6	-6.6	.7	-.7
RECEIVED COMMAND POWER	DBM	-86.6	-75.0	1.4	-1.4
PREDETECTION (PSK) NOISE BW(32.000 KHZ)	DB-HZ	45.1	45.1	.0	.0
PREDETECTION (PSK) NOISE POWER	DB	-127.4	-127.4	.0	2.0
PREDETECTION (PSK) SNR	DB	40.8	52.5	1.4	-2.4
COMMAND DATA RATE (2.000KBPS)	DB-BPS	33.0	33.0	.0	.0
AVAILABLE ENERGY PER BIT/NOISE DENSITY	DB	52.9	64.6	1.4	-2.4
DECODER DEGRADATION	DB	-2.0	-2.0	.0	.0
REQUIRED ENERGY PER BIT/NOISE DENSITY (BER=E-5)	DB	9.9	9.9	.0	.0
AVAILABLE COMMAND MARGIN	DB	41.0	52.7	1.4	-2.4
REQUIRED PERFORMANCE MARGIN	DB	3.0	3.0	.0	.0
NET MARGIN	DB	38.0	49.7	1.4	-2.4

TABLE A - 1 DOWNLINK
EOS-AM
FREQUENCY - 2287.500 MHZ
GROUND ANTENNA - 9-M USB at the GN
POWER - 4.50 WATTS
REALTIME TELEMETRY ONLY -
PCM(SPL-S)/PSK/PM - SUBCARRIER FREQ. = 1.024 MHz - DATA RATE = 16 kbps -
LINK 10A.

PARAMETER	UNITS	VALUES (MAX RNG: 2574.48 KM 5.0 EL)	VALUES MIN RNG: 705.00 KM 90.0 EL)	ESTIMATED TOLERANCES DB FAV	ESTIMATED TOLERANCES DB ADV
TOTAL TRANSMITTER POWER	DBM	36.5	36.5	1.0	-1.0
SPACECRAFT PASSIVE LOSSES	DB	-3.9	-3.9	.4	-.4
SPACECRAFT ANTENNA GAIN	DBI	-2.1	-2.1	.0	-.5
FREE SPACE DISPERSION LOSS	DB	-167.9	-156.6	.0	.0
ATMOSPHERIC LOSS	DB	-.4	.0	.0	.0
STDN ANTENNA GAIN (EFFECTIVE)	DBI	44.1	44.1	.5	-.5
COMBINER LOSS	DB	-.5	-.5	.0	-.5
POLARIZATION LOSS	DB	.0	.0	.0	.0
MAXIMUM TOTAL RECEIVED POWER	DBM	-94.2	-82.5	1.2	-1.4
SPACECRAFT ANTENNA NULL DEPTH	DB	.0	.0	.0	.0
MINIMUM TOTAL RECEIVED POWER	DBM	-94.2	-82.5	1.2	-1.4
SYSTEM NOISE DENSITY	DBM/HZ	-175.3	-178.6	-2.7	.7
IF NOISE BW(4500.000 KHZ)	DB-HZ	66.5	66.5	.0	.0
IF SNR (MIN)	DB	14.6	29.6	2.9	-1.5
CARRIER CHANNEL					
CARRIER/TOTAL POWER	DB	-1.4	-1.4	.1	-.1
RECEIVED CARRIER POWER (MIN)	DBM	-95.6	-83.9	1.2	-1.4
CARRIER LOOP NOISE BANDWIDTH(60. HZ)	DB-HZ	17.8	17.8	.0	.0
NOISE POWER	DBM	-157.5	-160.6	-2.7	.7
CARRIER/NOISE	DB	61.9	76.9	3.0	-1.6
REQUIRED CARRIER/NOISE	DB	15.0	15.0	.0	.0
AVAILABLE CARRIER MARGIN	DB	46.9	61.9	3.0	-1.6
REQUIRED PERFORMANCE MARGIN	DB	3.0	3.0	.0	.0
NET MARGIN	DB	43.9	58.9	3.0	-1.6
VIDEO CHANNEL					
VIDEO/TOTAL POWER	DB	-5.7	-5.7	.6	-.6
AVAILABLE VIDEO POWER	DBM	-99.9	-88.2	1.3	-1.5
VIDEO NOISE BW (2250.000 KHZ)	DB-HZ	63.5	63.5	.0	.0
VIDEO NOISE POWER	DBM	-111.8	-115.1	2.7	-.7
AVAILABLE SIGNAL/NOISE	DB	11.9	26.9	3.0	-1.6
DATA CHANNEL (PCM/PSK/PM)					
DATA/TOTAL POWER(MI= .80 RAD)	DB	-5.7	-5.7	.6	-.6
RECEIVED DATA POWER (MIN)	DBM	-99.9	-88.2	1.3	-1.5
PREDETECTION (PSK) NOISE BW(2048.000 KHZ)	DB-HZ	63.1	63.1	.0	.0
PREDETECTION (PSK) NOISE POWER	DB	-112.2	-115.5	-2.7	.7
PREDETECTION (PSK) SNR	DB	12.3	27.3	1.3	-1.5
INFORMATION RATE(16.000 KBPS)	DB-BPS	42.0	42.0	.0	.0
AVAILABLE SIGNAL/NOISE DENSITY	DB-HZ	75.4	90.4	3.0	-1.6
REQUIRED ENERGY PER BIT/NOISE DENSITY (BER= E-5)	DB	11.6	11.6	.0	.0
REQUIRED SIGNAL/NOISE DENSITY	DB-HZ	53.6	53.6	.0	.0
AVAILABLE SIGNAL MARGIN	DB	21.8	36.8	3.0	-1.6
REQUIRED PERFORMANCE MARGIN	DB	3.0	3.0	.0	.0
NET MARGIN	DB	18.8	33.8	3.0	-1.6

TABLE A - 2 DOWNLINK
EOS-AM
FREQUENCY - 2287.500 MHZ
GROUND ANTENNA - 9-M USB at the GN
POWER - 4.50 WATTS
REALTIME TELEMETRY ONLY - PCM(SPL-S)/PM - DATA RATE = 16 kbps -
PCM(SPL-S)/PSK/PM - SUBCARRIER FREQ. = 1.024 MHz - DATA RATE = 16 kbps -
LINK 10B.

PARAMETER	UNITS	VALUES (MAX RNG: 2574.48 KM 5.0 EL)	VALUES MIN RNG: 705.00 KM 90.0 EL)	ESTIMATED TOLERANCES DB FAV	ESTIMATED TOLERANCES DB ADV
TOTAL TRANSMITTER POWER	DBM	36.5	36.5	1.0	-1.0
SPACECRAFT PASSIVE LOSSES	DB	-3.9	-3.9	.4	-.4
SPACECRAFT ANTENNA GAIN	DBI	-2.1	-2.1	.0	-.5
FREE SPACE DISPERSION LOSS	DB	-167.9	-156.6	.0	.0
ATMOSPHERIC LOSS	DB	-.4	.0	.0	.0
STDN ANTENNA GAIN (EFFECTIVE)	DBI	44.1	44.1	.5	-.5
COMBINER LOSS	DB	-.5	-.5	.0	-.5
POLARIZATION LOSS	DB	.0	.0	.0	.0
MAXIMUM TOTAL RECEIVED POWER	DBM	-94.2	-82.5	1.2	-1.4
SPACECRAFT ANTENNA NULL DEPTH	DB	.0	.0	.0	.0
MINIMUM TOTAL RECEIVED POWER	DBM	-94.2	-82.5	1.2	-1.4
SYSTEM NOISE DENSITY	DBM/HZ	-175.3	-178.6	-2.7	.7
IF NOISE BW(4500.000 KHZ)	DB-HZ	66.5	66.5	.0	.0
IF SNR (MIN)	DB	14.6	29.6	2.9	-1.5
CARRIER CHANNEL					
CARRIER/TOTAL POWER	DB	-6.8	-6.8	.7	-.7
RECEIVED CARRIER POWER (MIN)	DBM	-101.0	-89.3	1.4	-1.5
CARRIER LOOP NOISE BANDWIDTH(60. HZ)	DB-HZ	17.8	17.8	.0	.0
NOISE POWER	DBM	-157.5	-160.8	-2.7	.7
CARRIER/NOISE	DB	56.5	71.5	3.0	-1.7
REQUIRED CARRIER/NOISE	DB	15.0	15.0	.0	.0
AVAILABLE CARRIER MARGIN	DB	41.5	56.5	3.0	-1.7
REQUIRED PERFORMANCE MARGIN	DB	3.0	3.0	.0	.0
NET MARGIN	DB	38.5	53.5	3.0	-1.7
VIDEO CHANNEL					
VIDEO/TOTAL POWER	DB	-2.4	-2.4	.2	-.2
AVAILABLE VIDEO POWER	DBM	-96.6	-84.9	1.2	-1.4
VIDEO NOISE BW (2250.000 KHZ)	DB-HZ	63.5	63.5	.0	.0
VIDEO NOISE POWER	DBM	-111.8	-115.1	2.7	-.7
AVAILABLE SIGNAL/NOISE	DB	15.2	30.2	3.0	-1.6
DATA CHANNEL (PCM/PM)					
DATA/TOTAL POWER(MI=1.00 RAD)	DB	-2.9	-2.9	.3	-.3
RECEIVED DATA POWER (MIN)	DBM	-97.1	-85.4	1.2	-1.4
INFORMATION RATE(16.000 KBPS)	DB-BPS	42.0	42.0	.0	.0
AVAILABLE SIGNAL/NOISE DENSITY	DB-HZ	78.2	93.2	3.0	-1.6
REQUIRED ENERGY PER BIT/NOISE DENSITY (BER= E-5)	DB	10.6	10.6	.0	.0
REQUIRED SIGNAL/NOISE DENSITY	DB-HZ	52.6	52.6	.0	.0
AVAILABLE SIGNAL MARGIN	DB	25.6	40.6	3.0	-1.6
REQUIRED PERFORMANCE MARGIN	DB	3.0	3.0	.0	.0
NET MARGIN	DB	22.6	37.6	3.0	-1.6

TABLE A - 2 DOWNLINK
EOS-AM
FREQUENCY - 2287.500 MHZ
GROUND ANTENNA - 9-M USB at the GN
POWER - 4.50 WATTS
REALTIME TELEMETRY ONLY - PCM(SPL-S)/PM - DATA RATE = 16 kbps -
PCM(SPL-S)/PSK/PM - SUBCARRIER FREQ. = 1.024 MHz - DATA RATE = 16 kbps -
LINK 10B.

PARAMETER	UNITS	VALUES (MAX RNG: 2574.48 KM 5.0 EL)	VALUES (MIN RNG: 705.00 KM 90.0 EL)	ESTIMATED TOLERANCES DB FAV	ESTIMATED TOLERANCES DB ADV
DATA CHANNEL (PCM/PSK/PM)					
DATA/TOTAL POWER(MI= .80 RAD)	DB	-11.0	-11.0	1.0	-1.0
RECEIVED DATA POWER (MIN)	DBM	-105.2	-93.5	1.5	-1.7
PREDETECTION (PSK) NOISE BW(2048.000 KHZ)	DB-HZ	63.1	63.1	.0	.0
PREDETECTION (PSK) NOISE POWER	DB	-112.2	-115.5	-2.7	.7
PREDETECTION (PSK) SNR	DB	7.0	22.0	1.5	-1.7
INFORMATION RATE(16.000 KBPS)	DB-BPS	42.0	42.0	.0	.0
AVAILABLE SIGNAL/NOISE DENSITY	DB-HZ	70.1	85.1	3.1	-1.8
REQUIRED ENERGY PER BIT/NOISE DENSITY (BER= E-5)	DB	11.6	11.6	.0	.0
REQUIRED SIGNAL/NOISE DENSITY	DB-HZ	53.6	53.6	.0	.0
AVAILABLE SIGNAL MARGIN	DB	16.5	31.5	3.1	-1.8
REQUIRED PERFORMANCE MARGIN	DB	3.0	3.0	.0	.0
NET MARGIN	DB	13.5	28.5	3.1	-1.8

TABLE A - 3 DOWNLINK
EOS-AM
FREQUENCY - 2287.500 MHZ
GROUND ANTENNA - S-M USB at the GN
POWER - 4.50 WATTS
PCP DUMP REALTIME TELEMETRY - PCM(SPL-S)/PM - DATA RATE = 512 kbps - PCM(SPL-S)/PSK/PM - SUBCARRIER FREQ. = 1.024 MHz - DATA RATE = 16 kbps - LINK 10C.

PARAMETER	UNITS	VALUES (MAX RNG: 2574.48 KM 5.0 EL)	VALUES MIN RNG: 705.00 KM 90.0 EL)	ESTIMATED TOLERANCES DB FAV	ESTIMATED TOLERANCES DB ADV
TOTAL TRANSMITTER POWER	DBM	36.5	36.5	1.0	-1.0
SPACECRAFT PASSIVE LOSSES	DB	-3.9	-3.9	.4	-.4
SPACECRAFT ANTENNA GAIN	DBI	-2.1	-2.1	.0	-.5
FREE SPACE DISPERSION LOSS	DB	-167.9	-156.6	.0	.0
ATMOSPHERIC LOSS	DB	-.4	.0	.0	.0
STDN ANTENNA GAIN (EFFECTIVE)	DBI	44.1	44.1	.5	-.5
COMBINER LOSS	DB	-.5	-.5	.0	-.5
POLARIZATION LOSS	DB	.0	.0	.0	.0
MAXIMUM TOTAL RECEIVED POWER	DBM	-94.2	-82.5	1.2	-1.4
SPACECRAFT ANTENNA NULL DEPTH	DB	.0	.0	.0	.0
MINIMUM TOTAL RECEIVED POWER	DBM	-94.2	-82.5	1.2	-1.4
SYSTEM NOISE DENSITY	DBM/HZ	-175.3	-178.6	-2.7	.7
IF NOISE BW(4500.000 KHZ)	DB-HZ	66.5	66.5	.0	.0
IF SNR (MIN)	DB	14.6	29.6	2.9	-1.5
CARRIER CHANNEL					
CARRIER/TOTAL POWER	DB	-6.8	-6.8	.7	-.7
RECEIVED CARRIER POWER (MIN)	DBM	-101.0	-89.3	1.4	-1.5
CARRIER LOOP NOISE BANDWIDTH(60. HZ)	DB-HZ	17.8	17.8	.0	.0
NOISE POWER	DBM	-157.5	-160.8	-2.7	.7
CARRIER/NOISE	DB	56.5	71.5	3.0	-1.7
REQUIRED CARRIER/NOISE	DB	15.0	15.0	.0	.0
AVAILABLE CARRIER MARGIN	DB	41.5	56.5	3.0	-1.7
REQUIRED PERFORMANCE MARGIN	DB	3.0	3.0	.0	.0
NET MARGIN	DB	38.5	53.5	3.0	-1.7
VIDEO CHANNEL					
VIDEO/TOTAL POWER	DB	-2.4	-2.4	.2	-.2
AVAILABLE VIDEO POWER	DBM	-96.6	-84.9	1.2	-1.4
VIDEO NOISE BW (2250.000 KHZ)	DB-HZ	63.5	63.5	.0	.0
VIDEO NOISE POWER	DBM	-111.8	-115.1	2.7	-.7
AVAILABLE SIGNAL/NOISE	DB	15.2	30.2	3.0	-1.6
DATA CHANNEL (PCM/PM)					
DATA/TOTAL POWER(MI=1.00 RAD)	DB	-2.9	-2.9	.3	-.3
RECEIVED DATA POWER (MIN)	DBM	-97.1	-85.4	1.2	-1.4
INFORMATION RATE(512.000 KBPS)	DB-BPS	57.1	57.1	.0	.0
AVAILABLE SIGNAL/NOISE DENSITY	DB-HZ	78.2	93.2	3.0	-1.6
REQUIRED ENERGY PER BIT/NOISE DENSITY (BER= E-5)	DB	10.6	10.6	.0	.0
REQUIRED SIGNAL/NOISE DENSITY	DB-HZ	67.7	67.7	.0	.0
AVAILABLE SIGNAL MARGIN	DB	10.5	25.5	3.0	-1.6
REQUIRED PERFORMANCE MARGIN	DB	3.0	3.0	.0	.0
NET MARGIN	DB	7.5	22.5	3.0	-1.6

TABLE A - 3 DOWNLINK
EOS-AM
FREQUENCY - 2287.500 MHZ
GROUND ANTENNA - 9-M USB at the GN
POWER - 4.50 WATTS
PCF DUMP REALTIME TELEMETRY - PCM(SPL-S)/PM - DATA RATE = 512 kbps -
PCM(SPL-S)/PSK/PM - SUBCARRIER FREQ. = 1.024 MHz - DATA RATE = 16 kbps -
LINK 10C.

PARAMETER	UNITS	VALUES (MAX RNG: 2574.48 KM 5.0 EL)	VALUES MIN RNG: 705.00 KM 90.0 EL)	ESTIMATED TOLERANCES DB FAV	ESTIMATED TOLERANCES DB ADV
DATA CHANNEL (PCM/PSK/PM)					
DATA/TOTAL POWER(MI= .80 RAD)	DB	-11.0	-11.0	1.0	-1.0
RECEIVED DATA POWER (MIN)	DBM	-105.2	-93.5	1.5	-1.7
PREDETECTION (PSK) NOISE BW(2048.000 KHZ)	DB-HZ	63.1	63.1	.0	.0
PREDETECTION (PSK) NOISE POWER	DB	-112.2	-115.5	-2.7	.7
PREDETECTION (PSK) SNR	DB	7.0	22.0	1.5	-1.7
INFORMATION RATE(16.000 KBPS)	DB-BPS	42.0	42.0	.0	.0
AVAILABLE SIGNAL/NOISE DENSITY	DB-HZ	70.1	85.1	3.1	-1.8
REQUIRED ENERGY PER BIT/NOISE DENSITY (BER= E-5)	DB	11.6	11.6	.0	.0
REQUIRED SIGNAL/NOISE DENSITY	DB-HZ	53.6	53.6	.0	.0
AVAILABLE SIGNAL MARGIN	DB	16.5	31.5	3.1	-1.8
REQUIRED PERFORMANCE MARGIN	DB	3.0	3.0	.0	.0
NET MARGIN	DB	13.5	28.5	3.1	-1.8