3724

CONTRACT NAS5-32500

Earth Observing System

EOS-AM SPACECRAFT PDR DATA PACKAGE

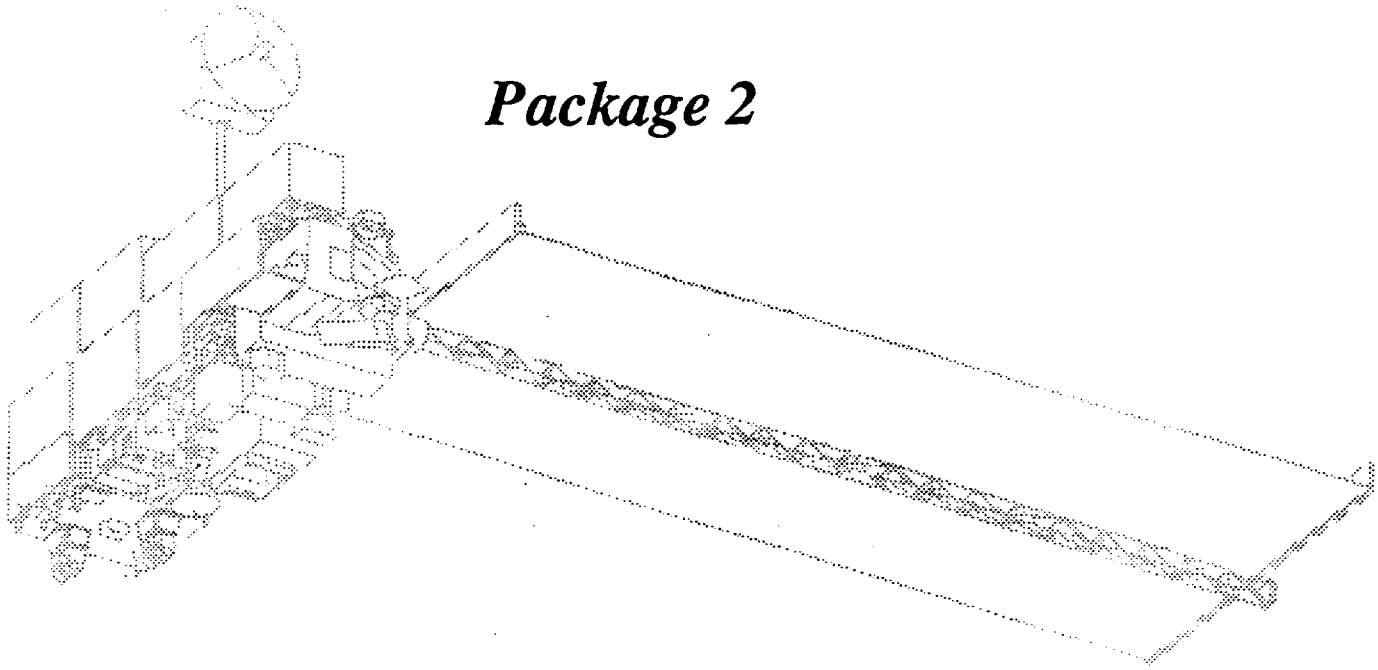

Package 2

8 JULY 1993

MD-121: EOS-AM SPACECRAFT PDR DATA PACKAGE

DR/DN	TYPE	TITLE	REV	DOCUMENT	DATE
PACKAGE NO. 1				30 APRIL 1993	
SEP-101	1	Contract End Item (CEI) Specification for the EOS-AM Spacecraft	-	PS20005396	4/15/93
ICD-103	1	EOS-AM Spacecraft to Launch Vehicle Interface Reqrmnts Document	Prelim	IS20008503	4/30/93
ICD-104	1	Radio Frequency ICD Between EOS-AM S/C and STDN	-	IS20008504	3/31/93
PACKAGE NO. 2				8 JULY 1993	
EOS-DN	-	Baseline Description Document (BDD) for the EOS-AM S/C (Preliminary)	I	SE&I-010	6/10/93
* EOS-DN	-	System Operating Modes	B	SE&I-001	5/21/93
SP-301	2	Performance Spec. Command & Data Handling S/S for EOS-AM S/C	-	PS20008567	6/28/93
SP-401	2	Performance Spec. Communications S/S for EOS-AM S/C	-	PS20008580	6/30/93
SP-501	2	Performance Spec. Electrical Power S/S for EOS-AM S/C	-	PS20004749	6/28/93
SP-741	2	Performance Spec. Electrical Accommodations S/S for EOS-AM S/C	-	PS20008636	7/6/93
SP-861	2	Critical Item Devlpmt. Spec. High Gain Antenna Assembly for EOS-AM S/C	-	PS20008513	10/16/92
* SP-871	2	Critical Item Devlpmt. Spec. Solar Array Assembly for EOS-AM S/C	-	PS20008514	5/7/93
* SEP-106	2	Electromaagnetic Compatibility (EMC) Control Plan for EOS-AMS/C	A	PN20005869	6/28/93
** ICD-106	1	Interface Control Document (ICD) Data Format Control Book for EOS-AM S/C	Prelim	IS20008658	6/8/93
* SD-110	2	EOS-AM S/C Flight Software System Requirements Specification	-	20008662	5/6/93
** VRD-100	2	Verification Plan for the EOS-AM S/C	-	PN20005404	5/5/93

* Received previously

** Received previously & not included in package

MARTIN MARIETTA
ASTRO SPACE

EOS–DN–SE&I–010

DESIGN NOTE

TITLE: Baseline Description Document (BDD) for the EOS–AM Spacecraft (Preliminary)

AUTHOR: Donald Benko

SE&I MANAGER: DATE 6/11/93

CHIEF ENGINEER: D. Forgroy DATE 6/11/93

REVISIONS

LETTER	DESCRIPTION	DATE	AUTHOR
Draft			
Rev. A	Mid–term Review Update (Period 3)		
Rev. A	Final Review Update (Period 3)		
Rev. B	Errata corrected	28 June 91	
Rev. C		30 Sept 91	
Rev. D	Update to EOS–AM Set Baseline	14 Nov 91	
Rev. E	Refinement of EOS–AM Set Baseline	20 Nov 91	
Rev. F	EOS AM Set Baseline Update	13 Dec 91	
Rev. G	EOS AM Set Baseline Review Edition	21 Jan 92	
Rev. H	EOS AM Bus PDR Edition	15 May 92	
Rev. I	EOS–AM Spacecraft PDR Edition	10 June 93	

(This page intentionally left blank.)

TABLE OF CONTENTS

SECTION / PARAGRAPH	TITLE	PAGE
1	INTRODUCTION	1
1.1	About This Document	1
1.2	Program Organization and Responsibility Areas	3
2	EOS MISSION	5
2.1	Background	5
2.2	EOS Definition	5
2.3	Mission Objective	7
2.4	EOS–AM Mission Characteristics	7
3	EOS–AM SPACECRAFT DESCRIPTION	11
3.1	General	11
3.2	Design Characteristics	11
3.3	Configuration	12
3.3.1	Launch Configuration	12
3.3.2	On–Orbit Configuration	12
3.3.3	Overall Size	12
3.3.4	Coordinate System	12
3.4	Environments	12
3.5	Spacecraft Interfaces	16
3.5.1	Launch Vehicle	17
3.5.2	TDRSS Interface	17
3.5.3	Ground Network (GN) Interface	18
3.5.4	Direct Access System Interface	18
3.5.5	Spacecraft Processing Interfaces	18
3.6	Spacecraft Operations	18
3.6.1	Mission Phases	18
3.6.2	Modes	20
3.7	Spacecraft Elements	23
3.7.1	Spacecraft Bus Subsystems	23

TABLE OF CONTENTS (Continued)

SECTION / PARAGRAPH	TITLE	PAGE
3.7.2	Spacecraft Bus Major Assemblies	25
3.8	Spacecraft Reliability	37
4	INSTRUMENT ACCOMMODATION	39
4.1	EOS–AM Instrument Set	39
4.2	Instrument Descriptions	39
4.3	Instrument Configurations	39
4.4	Resources Provided to the Instruments	46
4.5	Instrument Pointing and Orbit Requirements	46
4.6	Instrument Accommodation Equipment	47
4.7	Instrument Mechanical Interface	47
4.8	Instrument Thermal Interface	47
4.9	Instrument Electrical Interface	48
4.10	Command and Data Handling Services Provided to the Instruments	48
5	STRUCTURES AND MECHANISMS SUBSYSTEM (SMS)	51
5.1	Overall Function	51
5.2	Primary Structure and Propulsion Module Structure	51
5.3	Equipment Module and Panel Structures	53
5.4	Instrument Accommodation Structures	53
5.5	Restraint/Deployment Mechanisms	53
5.6	Solar Array Drive (SAD)	54
5.7	Kinematic Mounts (KMs)	54
5.8	Launch Vehicle Separation System	56
6	THERMAL CONTROL SUBSYSTEM (TCS)	57
6.1	Thermal Control Subsystem Overview	57
6.2	Thermal Design Parameters/Requirements	59
6.3	Instrument Thermal Design Description	60
6.3.1	Local TCS Strategy	60
6.3.2	Spacecraft Provided Instrument Thermal Control	60

TABLE OF CONTENTS (Continued)

SECTION / PARAGRAPH	TITLE	PAGE
6.3.3	Instrument Thermal Interfaces	61
6.4	Housekeeping Equipment Thermal Control	61
6.4.1	EM Equipment Thermal Control	62
6.4.2	Distributed Housekeeping Equipment Thermal Control	64
6.5	Heater Control Electronics (HCE)	65
7	ELECTRICAL POWER SUBSYSTEM (EPS)	67
7.1	EPS Overview	67
7.2	EPS Functional Description	70
7.2.1	Power Regulation and Control	71
7.2.2	Power Generation	72
7.2.3	Energy Storage	72
7.3	EPS Components	73
7.3.1	Solar Array Assembly	73
7.3.2	Sequential Shunt Unit	73
7.3.3	Power Distribution Unit	75
7.3.4	Battery Power Conditioner	76
7.3.5	Fuse Distribution Box (FDB)	77
8	ELECTRICAL ACCOMMODATIONS SUBSYSTEM (EAS)	79
8.1	Electrical Accommodations Functional Description	79
8.2	Electrical Accommodation Components	79
8.3	Core Harness	79
8.4	Grounding	79
9	GUIDANCE, NAVIGATION, AND CONTROL SUBSYSTEM (GN&CS)	83
9.1	GN&C Performance and Capability Margins	83
9.2	Attitude Control and Pointing Capabilities	84
9.3	GN&C Block Diagram	84
9.4	GN&C Software Functions	86
9.5	Safe–Mode Control	86

TABLE OF CONTENTS (Continued)

SECTION / PARAGRAPH	TITLE	PAGE
10	PROPULSION SUBSYSTEM (PROPS)	91
10.1	Propulsion Subsystem	91
10.2	Propulsion Functional Description/Architecture	91
10.3	Propulsion Avionics	93
10.3.1	PMEA Definition	93
10.3.2	EPC Definition	94
10.4	Propulsion Components	94
10.5	Propulsion Module Functional Description/Overview	95
11	COMMAND AND DATA HANDLING SUBSYSTEM (C&DHS)	97
11.1	C&DHS Functions and Services	97
11.2	C&DHS Block Diagram	97
11.3	C&DHS Components	99
11.3.1	Spacecraft Controls Computer	99
11.3.2	Command and Telemetry Interface Unit	100
11.3.3	Bus Data Units	104
11.3.4	Science Formatting Equipment (SFE)	104
11.3.5	Solid State Recorder	106
12	COMMUNICATIONS SUBSYSTEM (COMMS)	109
12.1	Communications Links and Link Parameters	109
12.2	Communication Link Functional Allocations	110
12.3	Communications Services	113
12.3.1	Command Uplink Services	115
12.3.2	Housekeeping Telemetry Downlink Services	115
12.3.3	Navigation Services	115
12.4	Science Data Services	115
12.4.1	TDRSS Ku–band Single Access (KSA) Services	116
12.4.2	Direct Access System (DAS)	116
12.4.2.1	Direct Broadcast Service	116

TABLE OF CONTENTS (Continued)

SECTION / PARAGRAPH	TITLE	PAGE
12.4.2.2	Direct Downlink Service	116
12.4.2.3	Direct Playback Service	116
12.5	DAS Requirements/Assumptions	116
12.5.1	DAS Operations	117
12.5.2	DAS Implementation	117
13 .	GROUND SUPPORT EQUIPMENT (GSE)	119
13.1	Electrical Ground Support Equipment Summary	119
13.2	Mechanical Ground Support Equipment (MGSE) Summary	119
13.2.1	Unique Mechanical Ground Support Equipment	120
13.2.1.1	Spacecraft Three–Axis Positioner	121
13.2.1.2	Mechanical Aerospace Ground Equipment (MAGE) Adapter	121
13.2.1.3	Horizontal Test Stand	121
13.2.1.4	Spacecraft Horizontal Sling	123
13.2.1.5	Transportation Accommodation	123
13.2.1.6	Propulsion Module Installation Fixture	125
13.2.1.7	Housekeeping Equipment Module Fixtures	125
13.3	Spacecraft Checkout Station (SCS)	126
13.4	Power Equipment Module Special Test Equipment (STE)	126
13.5	Communications/C&DH Equipment Module Special Test Equipment	129
13.6	Recorder/DAS EM Special Test Equipment	129
13.7	Guidance, Navigation, and Control Equipment Module Special Test Equipment . 132	
13.8	Propulsion Module Special Test Equipment	132
13.9	Spacecraft Interface Simulator (SIS)	132
13.10	Launch Support Equipment (LSE)	134
14	SOFTWARE	137
14.1	Flight Software	138
14.1.1	Host Locations	138
14.1.2	Flight Software Layering	139

TABLE OF CONTENTS (Continued)

SECTION / PARAGRAPH	TITLE	PAGE
14.1.3	Software Language	139
14.1.4	Flight Software Partition	140
14.1.5	Spacecraft Controls Computer (SCC) Software Description and Utilization	140
14.1.6	Firmware Description and Utilization	141
14.2	GSE Software	141
14.2.1	Spacecraft Checkout Station (SCS) Software	141
14.2.2	Spacecraft Interface Simulator (SIS) Software	143
14.2.3	Equipment Module STE Software	143
14.3	Software Development	143
14.3.1	Software Development Facility (SDF)	143
14.3.2	Flight Software Testbed	144
14.3.3	SDF Commercial Software Use	146
14.4	Operational Support Software	147
14.4.1	Spacecraft Analysis System (SAS)	147
14.4.2	Spacecraft Simulator (SSIM)	147
15	INTEGRATION, TEST, AND LAUNCH SITE OPERATIONS	149
15.1	Spacecraft Verification Process	149
15.2	I&T Overview	149
15.2.1	I&T Planning	152
15.2.2	Levels of Testing	152
15.3	Equipment Module Integration and Test	153
15.4	Spacecraft Integration	156
15.4.1	Mechanical Integration	156
15.4.2	Electrical Integration	156
15.4.3	Instrument Integration	159
15.5	Spacecraft Test	160
15.6	Environmental Test Facilities	161
15.7	Spacecraft Transportation	161
15.8	Launch Site Operations	161

TABLE OF CONTENTS (Continued)

SECTION / PARAGRAPH	TITLE	PAGE
16	OPERATIONS	165
16.1	Mission Operations Phases	165
16.2	Launch Ascent	165
16.3	EOS Flight Operations	167
16.3.1	Planning and Scheduling	167
16.3.2	Long Term Planning	170
16.3.3	Initial Scheduling	170
16.3.4	Daily Planning and Scheduling	171
16.3.5	Planning Aids	171
16.4	Uplink Generation	171
16.5	Real–Time Operations	173
16.6	Performance Verification	173
16.7	Database and Software Maintenance	174
16.8	Early Orbit Flight Operations	175
16.8.1	Launch Ascent – Orbit Acquisition Mission Phases	175
16.8.2	Activation	176
16.8.3	Transition to Orbital Operations	177
16.9	Spacecraft Maneuvers	177
16.10	Contingencies	178
17	OPERATIONAL GROUND FACILITIES	180
17.1	Spacecraft Analysis System (SAS) Software	180
17.2	Spacecraft Simulator (SSIM)	180

LIST OF FIGURES

FIGURE	TITLE	PAGE
1	EOS–AM Spacecraft Specification Tree	2
2	EOS Program Office Organization	4
3	Global Change Science Priorities	6
4	Instrument Contribution to the Science Mission Objectives	8
5	EOS–AM Spacecraft Launch Configuration	13
6	EOS–AM Spacecraft On-Orbit Configuration	14
7	Spacecraft Dimensions	15
8	External Spacecraft Interfaces	16
9	EOS Mission Profile	19
10	Phase and Mode Transitions	21
11	EOS–AM Spacecraft Functional Block Diagram	26
12	System Functional Interface Diagram	27
13	EOS–AM Spacecraft – Major Assemblies	29
14	GN&C Sensor EM	30
15	Recorder EM	31
16	Power EM	32
17	COMM/C&DH EM	33
18	RWA EM	34
19	Battery Panel	35
20	DAS Panel	36
21	EOS Spacecraft Mission Probability of Success Assessment	37
22	EOS–AM Instrument Set Layout	40
23	EOS–AM ASTER Configuration	41
24	EOS–AM CERES Configuration	42
25	EOS–AM MISR Configuration	43
26	EOS–AM MODIS Configuration	44
27	EOS–AM MOPITT Configuration	45
28	Instrument Electrical and Data Interfaces	49
29	EOS–AM Primary Structure Design	52
30	SAA/HGA Stowed and Deployed Configurations	55

LIST OF FIGURES (Continued)

FIGURE	TITLE	PAGE
31	TCS Key Features	57
32	Thermal Control Subsystem Functional Block Diagram	58
33	CPHTS Equipment Layout (Typical)	61
34	Equipment Modules Thermal Control Features	62
35	EPS Power Distribution Diagram	68
36	EPS Functional Block Diagram	69
37	Bus Regulation at PCU Control Point	71
38	Solar Array Assembly	74
39	Equipment Module Power Distribution	78
40	Harness Segmentation	80
41	Spacecraft Grounding Diagram	81
42	GN&C Subsystem Functional Block Diagram	85
43	GN&C Software Functional Block Diagram	87
44	Safe Mode Block Diagram	89
45	Propulsion Subsystem Functional Diagram	92
46	Propulsion Subsystem Schematic	93
47	Propulsion Module	96
48	Command and Data Handling Subsystem Block Diagram	98
49	C&DHS Functional Interfaces with Spacecraft Subsystem with Embedded RT	100
50	C&DHS Functional Interfaces with SCC–based FSWS	101
51	C&DHS Functional Interfaces with an Instrument	101
52	C&DHS Functional Interface with COMMS	102
53	C&DHS Functional C&T Interfaces with Spacecraft Equipment (BDU)	102
54	SFE and SSR Interface Block Diagram	105
55	Communications Subsystem: Links	109
56	High Gain Antenna	111
57	Communications Subsystem Block Diagram	114
58	Spacecraft on Three–axis Positioner	121
59	MAGE Adapter (Spacecraft Three–Axis Positioner)	122

LIST OF FIGURES (Continued)

FIGURE	TITLE	PAGE
60	Horizontal Test Stand (HTS)	122
61	Spacecraft Horizontal Sling	123
62	Spacecraft in GRO Container	124
63	Propulsion Module Installation Fixture (Vertical Installation)	126
64	Spacecraft Checkout Station (SCS) Block Diagram	127
65	Power Equipment Module STE	128
66	Comm/C&DH Equipment Module STE	130
67	Recorder/DAS EM STE	131
68	GN&C Equipment Module STE	133
69	Propulsion Module STE	134
70	SIS Block Diagram	135
71	Launch Support Equipment	135
72	Flight Software Layering	139
73	SCS Block Diagram	142
74	SIS and Generic EM STE Test Setup	143
75	Software Development Facility Hardware Configuration	144
76	Full HW/SW Flight Software Testbed	145
77	Summary of the Verification Process	150
78	Spacecraft Verification Flow Overview	151
79	I&T Assembly Plan and CTP Interaction	154
80	Equipment Module Assembly and Test Flow	155
81	Spacecraft Integration Flow	157
82	Spacecraft Test Flow	158
83	Martin Marietta Astro Space Environmental Test Facilities	162
84	Launch Site Processing Flow	163
85	Planning and Scheduling Product Flow	168
86	Flight Operations Manning	169
87	Delta–V Activity Flow	176
88	Spacecraft Analysis System Block Diagram	181
89	Spacecraft Simulator Block Diagram	181

LIST OF TABLES

TABLE	TITLE	PAGE
I	EOS Spacecraft Subsystem and Functional Responsibilities	3
II	Key TDRSS Interface Characteristics	17
III	EOS–AM Instrument Resource Allocations	46
IV	EOS–AM Instrument Orbit Position Knowledge and Accuracy Requirements	46
V	EOS–AM Instrument Jitter and Stability Requirements (Peak–to–Peak)	47
VI	Instrument Thermal Accommodation	48
VII	Resource Allocations to Instruments	49
VIII	Thermal Control Subsystem: Assumed Parameters	59
IX	Equipment Module Dissipations, Heat–Rejection Capability, and Radiator Temperatures	63
X	EPS Regulated Bus Performance Characteristics	70
XI	GN&C Performance	83
XII	Instrument Pointing Budget	84
XIII	GN&C Flight Software Tasks	88
XIV	Major Components	99
XV	Science Data Links	105
XVI	Forward (Command) Links	110
XVII	EOS Return Link Telemetry, Science and Tracking Modes	112
XVIII	DAS Requirements/Assumptions	117
XIX	DAS Modulator Modes	118
XX	EOS MGSE List	120
XXI	MGSE Design Criteria	125
XXII	Software Elements Identity and Size	137
XXIII	Flight Software Maximum Utilization	138
XXIV	SCC Software Resource Estimates and Utilization	140
XXV	CTIU Firmware Estimates and Utilization	141
XXVI	SCS Capabilities	142
XXVII	SDF Software–Development Tools	146
XXVIII	EOS–AM Launch Ascent/Acquisition Timeline	166

(This page intentionally left blank.)

1 INTRODUCTION

1.1 About This Document

The Baseline Description Document (BDD) is a top–level overview of the Earth Observing System (EOS) AM Spacecraft, the associated ground equipment, and the software necessary to operate the Spacecraft. This document also describes some of the key technical aspects of the EOS program, including Reliability, Operations, Integration and Test, and the interfaces between the Spacecraft and other facilities.

The Baseline Description Document is not a requirements document. The BDD is descriptive, and is meant to supplement, not substitute for, the various specifications and other documents which provide formal control of the EOS–AM Spacecraft design and of its development. The hierarchical relationship among these documents is shown in Figure 1.

The BDD will not be subject to formal control, and therefore is subordinate to all of the contractually related specifications and interface control documents (ICDs). This issue of the BDD is intended to reflect the design baseline that will be presented at the EOS–AM Spacecraft PDR which will occur in September 1993.

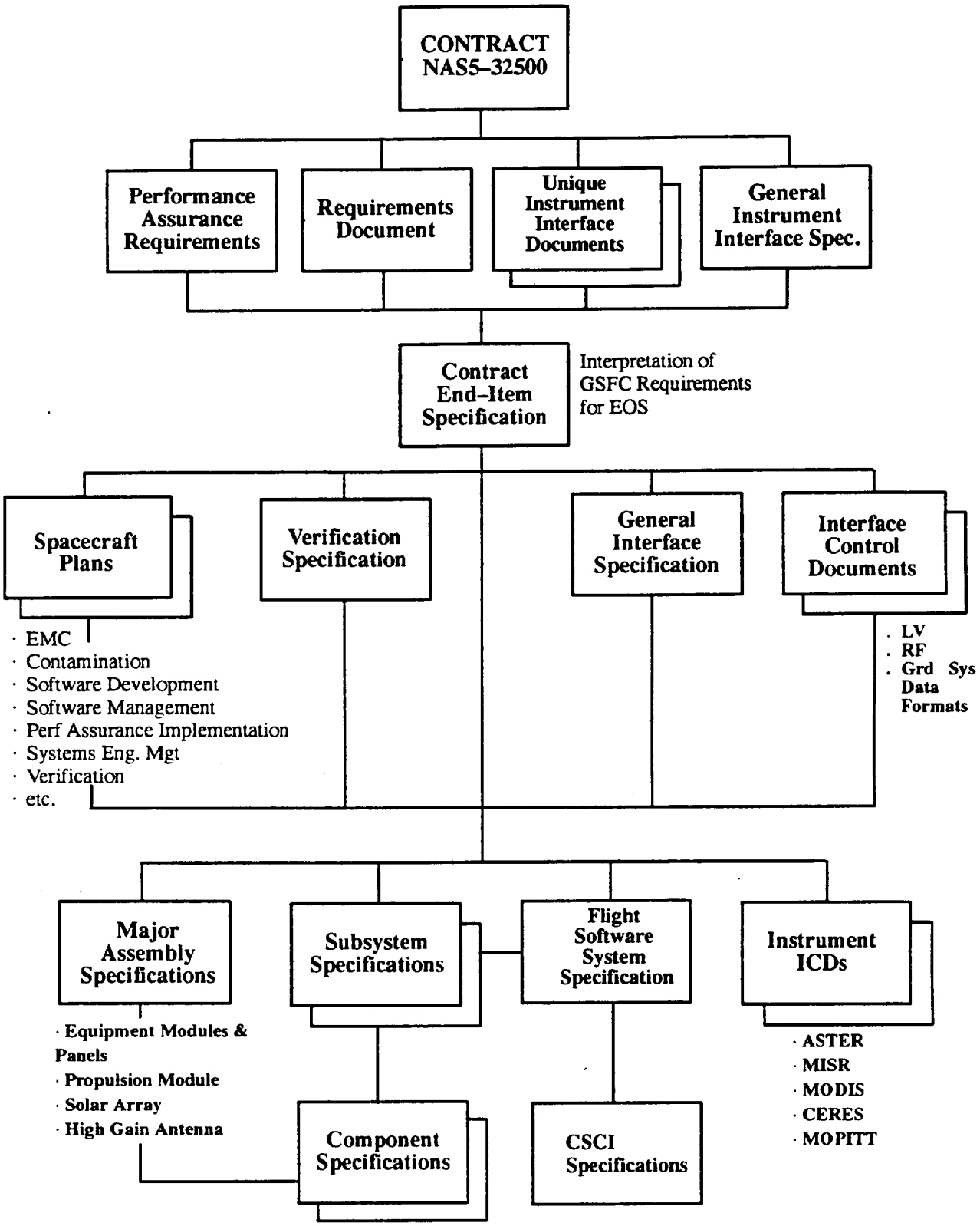

Figure 1. EOS–AM Spacecraft Specification Tree

1.2 Program Organization and Responsibility Areas

The BDD primarily covers aspects of the EOS Program which are responsibility of Martin Marietta Astro Space (Astro Space). An organization chart of the Astro Space EOS–AM Program Management Office and related functional organizations is provided in Figure 2. The cognizant/responsible persons identified with particular subsystems or program functions, as listed in Table I, should be able to provide more detailed and definitive information in their areas, as needed.

Table I. EOS Spacecraft Subsystem and Functional Responsibilities

Subsystem/Functional Area	BDD Sec(s)	Responsible
System Engineering and Interfaces	2–3	D. Benko/K. Johnson
Reliability	3	W. Schweigert
Instrument Accommodations	4	N. Benko
Structures and Mechanisms Subsystem (SMS)	5	S. Raymus/H. Silverman
Thermal Control Subsystem (TCS)	6	D. Chalmers/H. Bond
Electrical Power Subsystem (EPS)	7	N. Nassar/P. Callen
Electrical Accommodation Subsystem (EAS)	8	S. Holaday/D. Benko
Guidance, Navigation, and Control Subsystem (GN&CS)	9	J. Lombardo/J. Herberg
Propulsion Subsystem (PROPS)	10	L. Rattenni/T. Ford
Command and Data Handling Subsystem (C&DHS)	11	M. Roza/B. Blau
Communications Subsystem (COMMS)	12	T. Milbourne/B. Blau
Ground Support Equipment (GSE)	13	K. Rankin/E. Keeling
Software	14	A. Franz/J. Gelover
Integration and Test (I&T)	15	E. Keeling/J. Bacher
Operations and Ground Systems	16	R. Talipsky
Operational Ground Facilities	17	E. Braknis

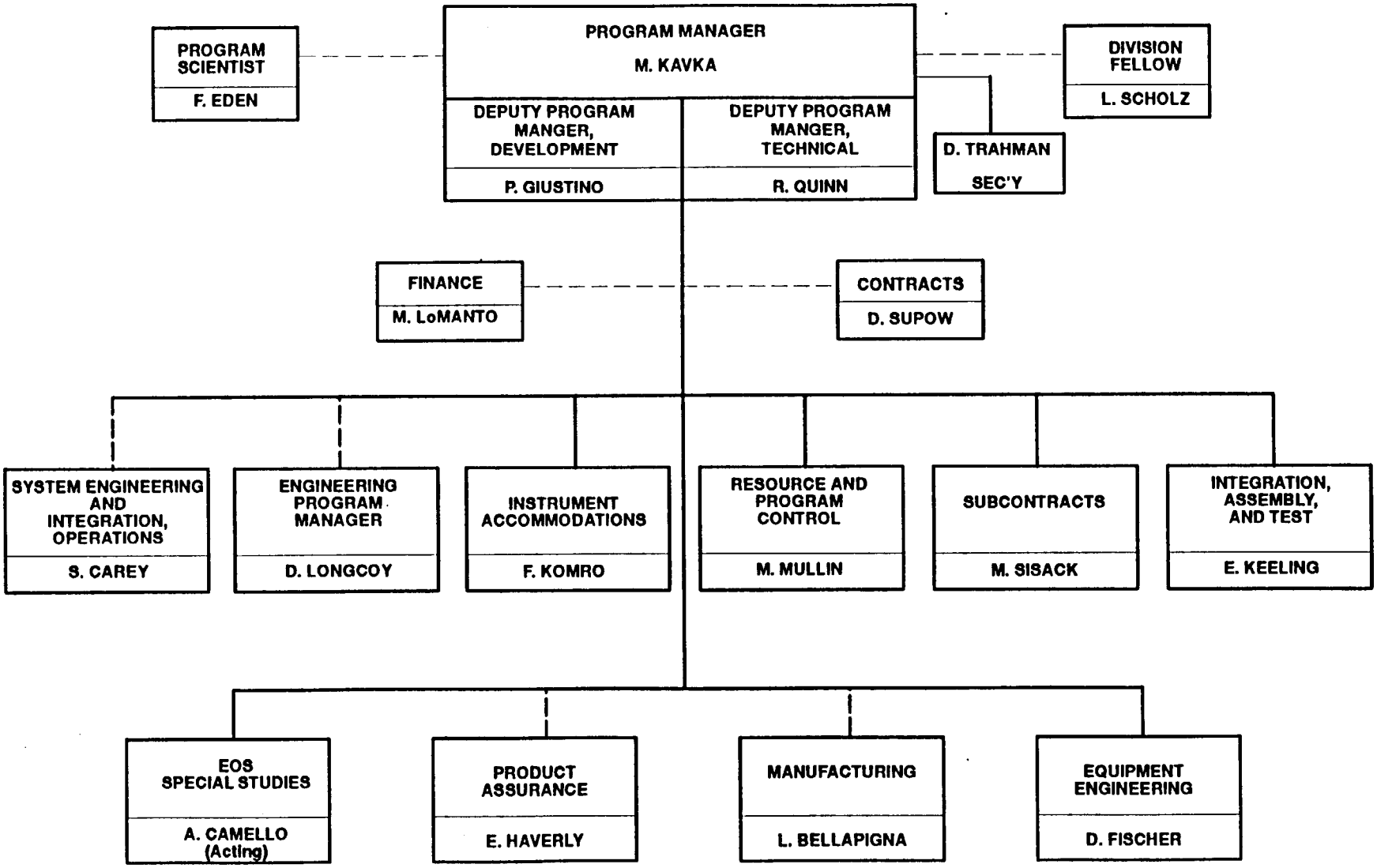

Figure 2. EOS Program Office Organization

2 EOS MISSION

2.1 Background

The Earth system has always been in a constant state of change. There is, however, scientific evidence that suggests that human activities are now effecting the change of several key components of the Earth system. A long–term global study of the Earth as a complex, integrated system is required to monitor and aid predictions of both natural and human–induced effects. Observations are needed that will provide a characterization of the planet as a whole and provide detailed measurement of regional variations. Remote sensing of the Earth's environment from Space provides a global perspective that can yield the quality and quantity of data that is needed to gain a true understanding of the Earth system.

2.2 EOS Definition

NASA, along with several other government agencies, has been charged with developing a detailed understanding of the Earth system. NASA's institutional response is known as "Mission to Planet Earth." The "Mission to Planet Earth" consists of a series of scientific and flight opportunities. The major component of this mission is EOS, the Earth Observing System.

The EOS program will combine spaceborne observations of the Earth and data processing, archiving, and distribution with a scientific research effort. This integrated approach is best characterized as an information system providing the geophysical, chemical, and biological information necessary for an intense study of planet Earth.

The EOS program has three primary components:

The EOS Scientific Research Program:

The EOS Scientific Research Program concentrates on building and complementing the Earth science research efforts of NASA and other research agencies.

The EOS Data and Information System (EOSDIS):

The EOSDIS will provide computing and networking facilities supporting EOS research activities, including data interpretation and modeling; processing, distribution, and archiving of EOS data; and command and control of the Spacecraft.

The EOS Spacecraft:

Each EOS Spacecraft will carry a unique set of scientific instruments and will focus primarily on global observations of the Earth from near–polar orbits. The EOS Spacecraft will provide in total a 15–year comprehensive series of measurements of the key components and interactions of the Earth System.

EOS is NASA's primary contribution to the U.S. Global Change Research Program (USGCRP), serving as the cornerstone of USGCRP's effort aimed at addressing issues of climate change. The USGCRP is an integrated effort of nine U.S. government agencies (NASA, National Science Foundation, Department of Interior, U.S. Department of Agriculture, Environmental Protection Agency, Department of Energy, Smithsonian Institution, Department of Defense, and the National Oceanic and Atmospheric Administration), as major contributors, charged with the goal of gaining an understanding of the interactive physical, geological, chemical, and biological processes that regulate the total Earth system to allow for the eventual prediction of climate change as an input to policy formation.

Figure 3 shows the seven science priority areas that comprise the overall scientific research effort for EOS. It should be noted that all of the research topics listed in the figure are essential for developing an accurate perspective of the Earth system.

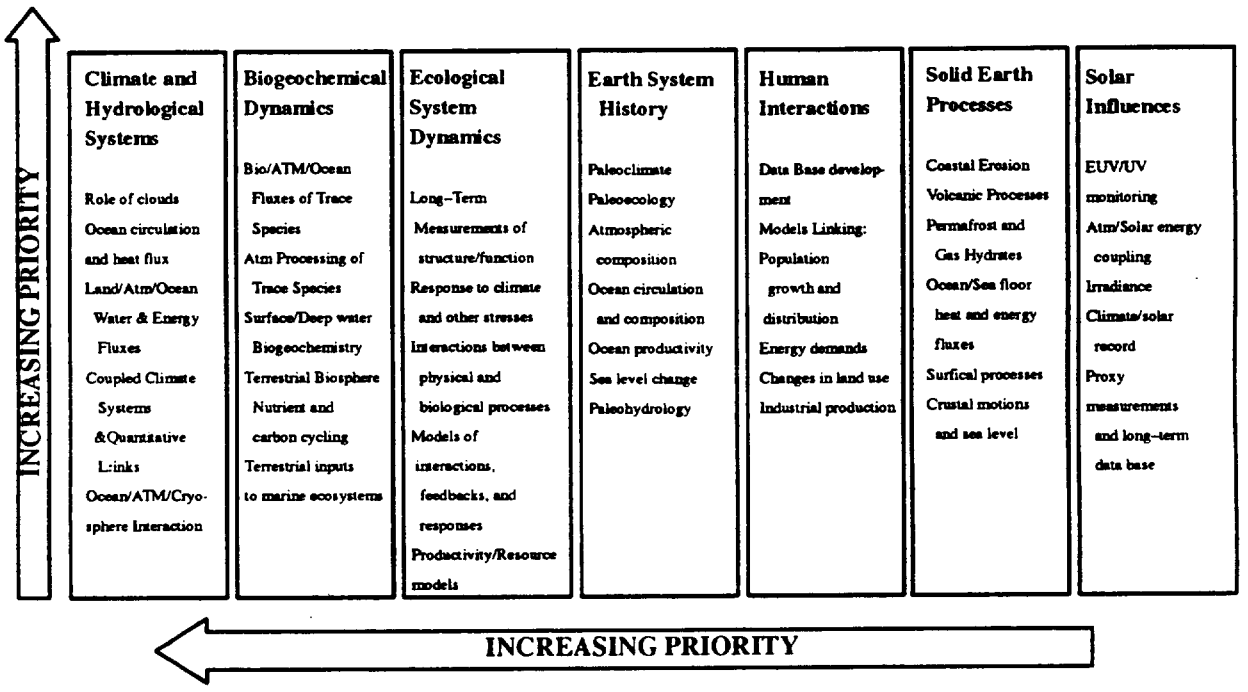

Figure 3. Global Change Science Priorities

Based on recommendations from the Intergovernmental Panel on Climate Change (IPCC), the Environmental Protection Agency, and the Committee on Earth and Environmental Sciences, the instruments selected for use on EOS will study:

- clouds, radiation, water vapor, and precipitation;
- oceanic productivity, circulation, and air–sea exchange;
- sources and sinks of greenhouse gases and their atmospheric transformations with emphasis on the carbon cycle;

- changes in land use, land cover, primary productivity, and the water cycle;
- polar ice sheets and the sea level;
- the coupling of ozone chemistry with climate and biosphere;
- volcanos and their role in climate change.

These issues are consistent with the priorities listed in the above Figure 3.

2.3 Mission Objective

The goal of the EOS science mission is to advance the understanding of the entire Earth system on a global scale, by developing a detailed understanding of the components of the system, the interrelations among them, and how the Earth system is changing.

The fundamental objective of the EOS science mission is to provide the user community (science, industry, policy) with the first comprehensive long–term measurement and data system specifically aimed at global change issues.

The instrument set was selected to combine high–priority new measurements with continuation of critical data sets begun by missions that preceded EOS such as Upper Atmosphere Research Satellite (UARS) and Ocean Topography Experiment TOPEX/Poseidon. Figure 4 relates USGCRP science priorities to the instruments selected to fly on the first EOS Spacecraft (EOS–AM). These instruments are:

ASTER: Advanced Spaceborne Thermal Emission and Reflection Radiometer; high resolution images of land surface, water, and clouds from visible through thermal infrared wavelength for climatological, hydrological, biological and geological studies.

CERES: Clouds and Earth's Radiant Energy System; long–term measurements of Earth's radiation budget through observations of both short and long–wave radiation.

MISR: Multi–Angle Imaging Spectro–Radiometer; global maps of planetary and surface albedo, aerosols, and vegetative properties.

MODIS: Moderate–Resolution Imaging Spectroradiometer; measurement of comprehensive biological and geophysical processes, at the Earth's surface, surface temperatures, and cloud properties.

MOPITT: Measurements of Pollution in the Troposphere; measurements of atmospheric concentrations of CO and the CH_4.

2.4 EOS–AM Mission Characteristics

The first in the series of EOS Spacecraft, EOS–AM, is being developed under the direction of NASA's Goddard Space Flight Center (GSFC) with Martin Marietta Astro Space as the prime contractor for the EOS–AM Spacecraft bus and the integration of the EOS–AM instrument set to the Spacecraft bus. The fully integrated Spacecraft is composed of the Spacecraft bus, which provides housekeeping resources to the instruments, and the AM instrument set. This document describes in detail the EOS–AM Spacecraft.

AM INSTRUMENT SCIENCE OBJECTIVES

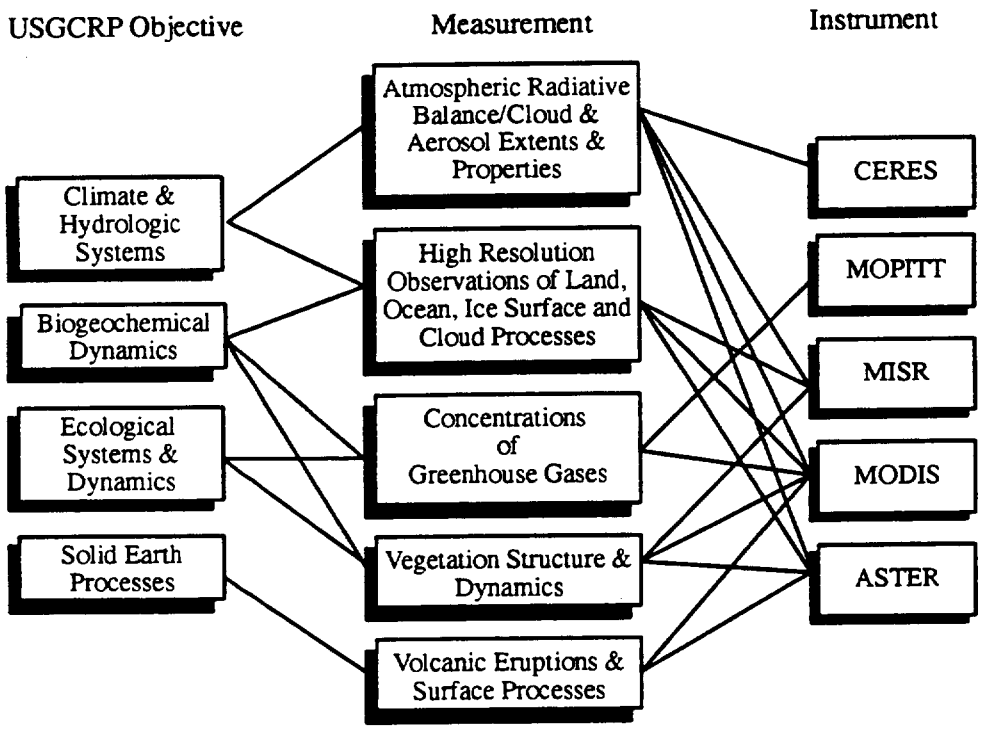

Figure 4. Instrument Contribution to the Science Mission Objectives

The EOS–AM mission requires that the Spacecraft be in a high inclination, sun–synchronous orbit. The nominal orbit parameters are:

Equatorial Altitude:	705 km (nominal)
Mean Semi–Major Axis:	7078 km (nominal)
Mean Inclination:	98.2 degrees (nominal)
Mean Eccentricity:	0.0012 (frozen orbit)
Mean Argument of Perigee:	90 degrees (frozen orbit)
Descending Node:	10:30 a.m. ± 15 min (local mean solar time)
Injection orbit:	
Perigee Altitude:	550 km (nominal)
Apogee Altitude:	<705 km (nominal)
Ground Track Requirements:	
Ground Track:	± 20 km, at all latitudes, cross–track
Repeat Cycle:	233 rev., 16 days

This orbit allows the instrument set to observe any portion of the Earth on a periodic basis under nearly constant solar illumination conditions. The EOS–AM Spacecraft is scheduled to be launched from Vandenberg Air Force Base in June of 1998 on an intermediate class launch vehicle. The mission orbit will be maintained by planned occasional propulsive maneuvers.

The AM instrument set produces data at high rates, up to a total of 110 Mbps. In order to process this large volume of data, the Spacecraft stores the data in a solid–state recorder (SSR) and later plays it back through Tracking and Data Relay Satellite System (TDRSS) at a rate of 150 Mbps. This method allows the Spacecraft to require only 20 minutes of TDRSS time out of an approximately 100–minute orbit. To allow for operational flexibility, the Spacecraft carries enough on–board storage capacity to store 140 Gbits of packetized instrument data. In order to operate without continuous contacts, the Spacecraft is operated via an uplinked plan which autonomously operates the data collection function of the Spacecraft. The execution of this plan commands instruments into different data–generating modes and adjusts data storage within the SSR accordingly. The plan is uplinked to the Spacecraft once per day concurrent with one of the 20–minute TDRSS downlink contacts. It is also during these contacts that Spacecraft operation and monitoring tasks occur.

In addition to the TDRSS communication links, the Spacecraft also has a direct–to–ground system, the Direct Access System (DAS). This system has the capability to transmit data directly to ground stations on either a continuous or scheduled basis, depending on the rate and type of data required.

(This page intentionally left blank.)

3 EOS–AM SPACECRAFT DESCRIPTION

3.1 General

The EOS–AM Spacecraft is constructed with a truss–like primary structure built of graphite–epoxy tubular members. This lightweight structure provides the strength and stiffness needed to support the Spacecraft throughout its various mission phases. The graphite–epoxy structure also supports the tight pointing accuracy and alignment required for instrument operation. These pointing and stability requirements also drive the use of high–accuracy star trackers in the attitude control system and the generation of high–fidelity on–board navigation data via TDRSS Doppler information.

The instruments are mounted on the nadir–pointed side of the Spacecraft in order to provide the appropriate optical and thermal fields–of–view for the instrument optics and radiators. The zenith face of the Spacecraft is populated with equipment modules (EMs) housing the various Spacecraft bus components. The EMs are sized and partitioned to facilitate pre–launch integration and test of the Spacecraft. The external panels of the EMs generally act as thermal radiators or they are covered with thermal blankets in order to maintain component temperature control. In order to support Instrument heat rejection, a capillary–pumped heat transport system (CPHTS) carries heat from some of the instruments on the Earth–facing deck to radiators on the cold side of the Spacecraft. The propulsion module is located inside the aft end of the Spacecraft where it is installed after it is built up and tested as a separate unit.

A large single–wing solar array is deployed on the sunlit side of the Spacecraft. Locating the array on this side maximizes both its power generation capability and the cold–space field–of–view available to instrument and equipment module radiators. This large solar array is required to support the instrument power requirements of over 1.2 kilowatts and the housekeeping power requirements driven by the high instrument data rates.

A steerable high–gain antenna (HGA) and associated electronics are mounted on a deployed boom extending from the zenith side of the Spacecraft. This location maximizes the amount of time available for TDRSS communications via this antenna without obstruction by other parts of the Spacecraft. S–band omni–directional antennas extend from both the zenith and nadir sides of the Spacecraft. These hemispherical–pattern antennas ensure all–attitude accessibility for contingency and emergency communications links. An X–band Earth–coverage antenna is mounted on the nadir side to support direct–to–ground transmissions via the DAS.

3.2 Design Characteristics

In order to achieve its mission objective the Spacecraft has the following major design characteristics:

- Five–year design life;
- 2.5 kW average power;
- 110 Mbps peak instrument science data rate handling capability;
- 15 to 20 Mbps average instrument science data rate handling capability;

- Total Spacecraft mass of 11,065 lbs within the launch vehicle lift capability;
- On–board storage capacity for 140 Gbits of instrument science data;
- 150 Mbps science data downlink capability.

3.3 Configuration

3.3.1 Launch Configuration

The EOS–AM Spacecraft, with all appendages positioned in their launch configuration, is shown in Figure 5. In its launch configuration, the Spacecraft is designed to fit within the payload fairing of an Atlas launch vehicle The standard fairing has been extended three feet in length to accommodate the full Spacecraft.

3.3.2 On–Orbit Configuration

The on–orbit configuration of the EOS–AM Spacecraft is depicted in Figure 6. The figure shows the locations of the EMs and the instruments. The HGA and the Solar Array, which are deployed on orbit, are also highlighted in the figure.

3.3.3 Overall Size

The overall dimensions of the Spacecraft are shown in Figure 7. In its flight configuration the Spacecraft is 22.5 feet in length (X axis), including instruments mounted at the +X end of the primary structure. With the solar array deployed, the Spacecraft will span approximately 50 feet in width (Y axis).

3.3.4 Coordinate System

The Spacecraft coordinate system has been fixed so that the Z axis is through the center of the earth, with +Z being nadir, and normal to the instrument mounting surface. The Y axis is along the orbit normal with +Y towards the cold (anti–sun) side of the Spacecraft. The X axis is normal to the Spacecraft separation plane, and is nominally oriented along the orbital velocity vector, with +X being in the velocity direction. However, due to the slight eccentricity of the orbit, the X axis is not always coincident with the velocity vector. The Spacecraft origin (X=0) is located at the geometric center of the propulsion module base panel, 4 inches above the Spacecraft separation plane.

3.4 Environments

The Spacecraft design permits it to operate successfully and within specification after exposure to the natural and induced environmental conditions expected to be encountered throughout the various mission phases. Natural environmental conditions which the Spacecraft must operate through include: atmospheric density and composition, plasma, charged particles, electrostatic charging, meteoroids and space debris, magnetic and gravitational fields, plus ionizing and thermal radiation. The induced environments include electromagnetic radiation, shock, linear acceleration, thermal, humidity, atmosphere, contamination, plasma, and radiation. These environments are described in more detail by the General Interface Specification, IS20008501.

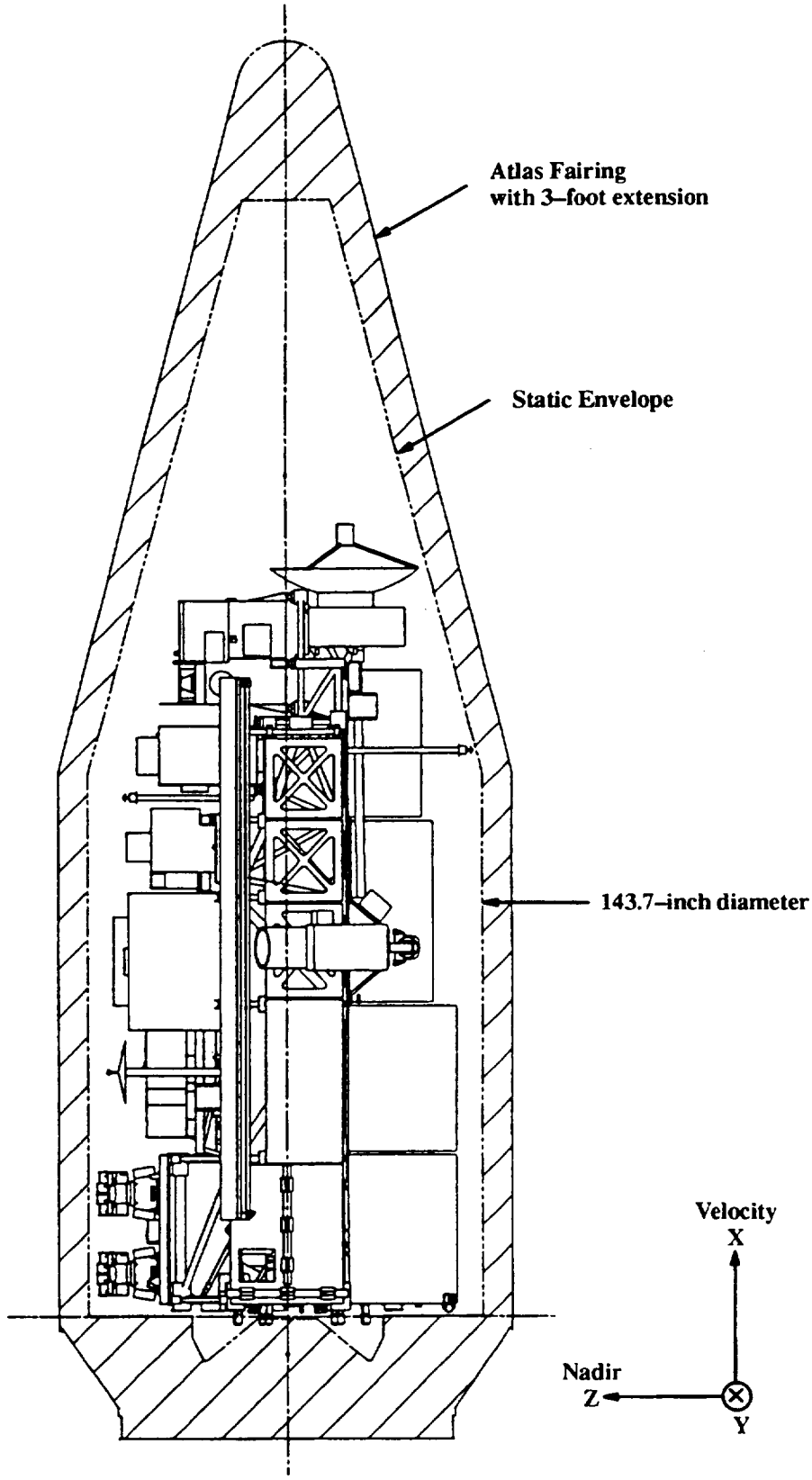

Figure 5. EOS–AM Spacecraft Launch Configuration

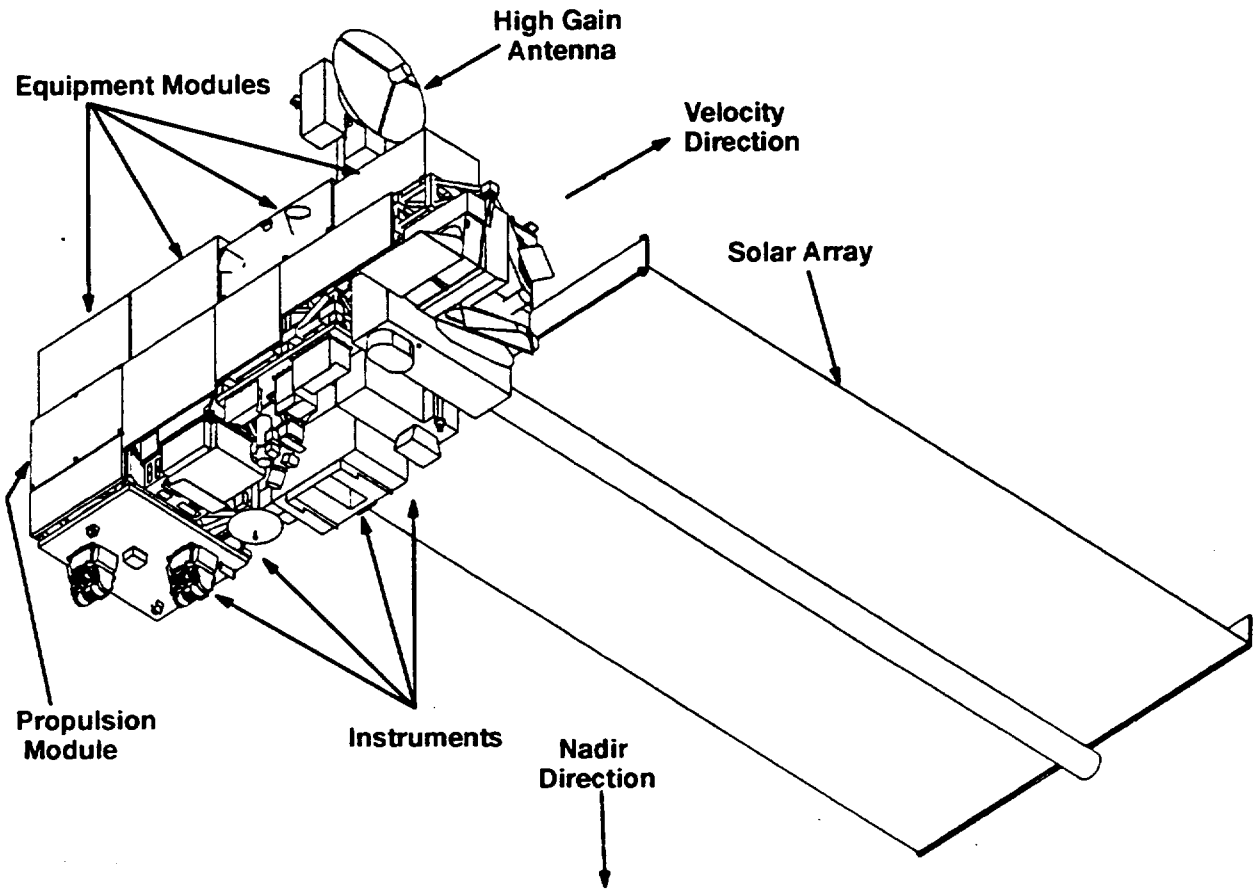

Figure 6. EOS–AM Spacecraft On-Orbit Configuration

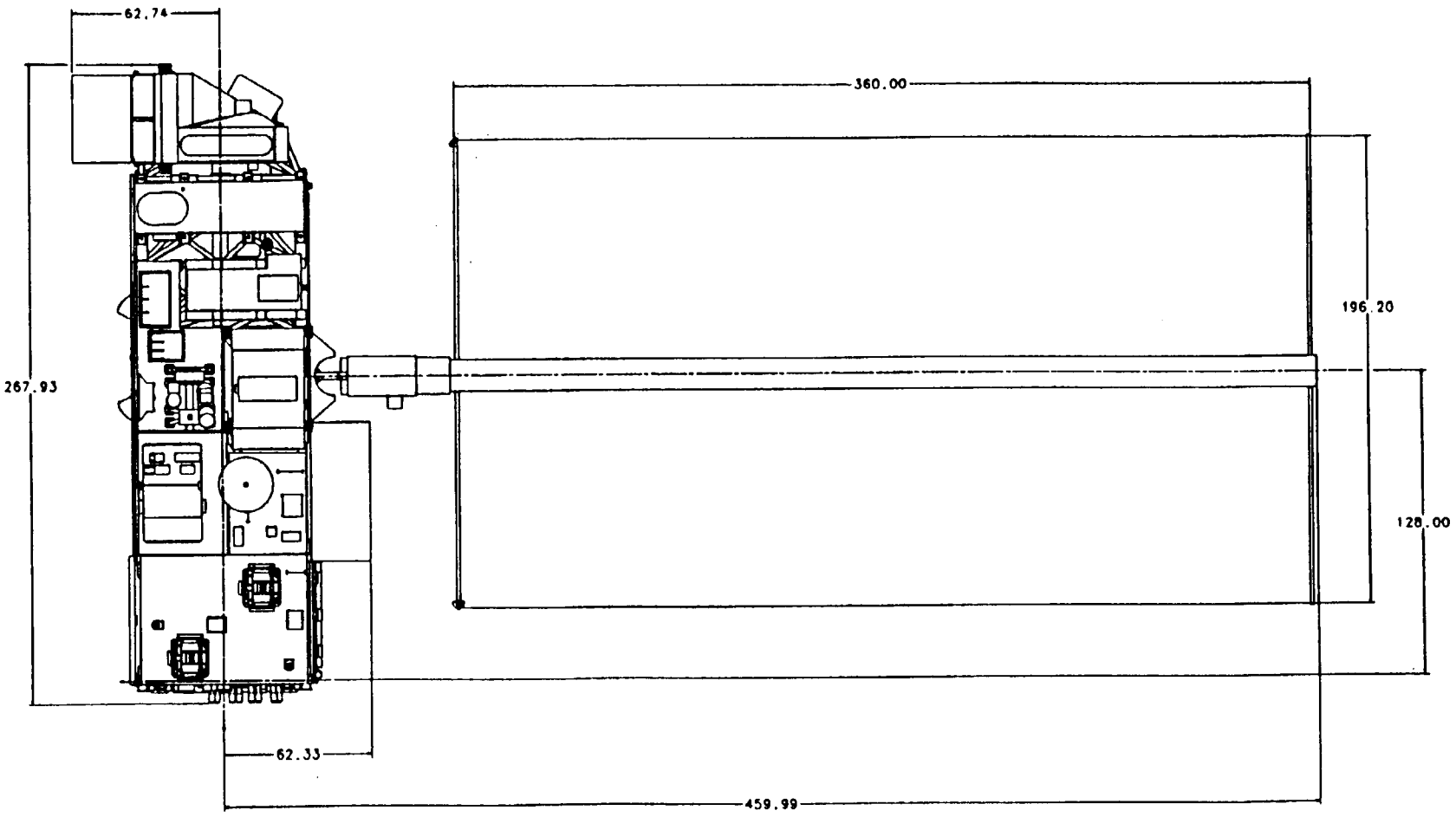

Dimensions shown in inches

Figure 7. Spacecraft Dimensions

3.5 Spacecraft Interfaces

The Spacecraft interfaces shown in Figure 8 allow it to carry out its mission. These interfaces include those necessary for prelaunch and launch activities, and communication with the ground. The external interfaces are controlled with ICDs and other applicable specifications. All Spacecraft interfaces are verified during integration and test.

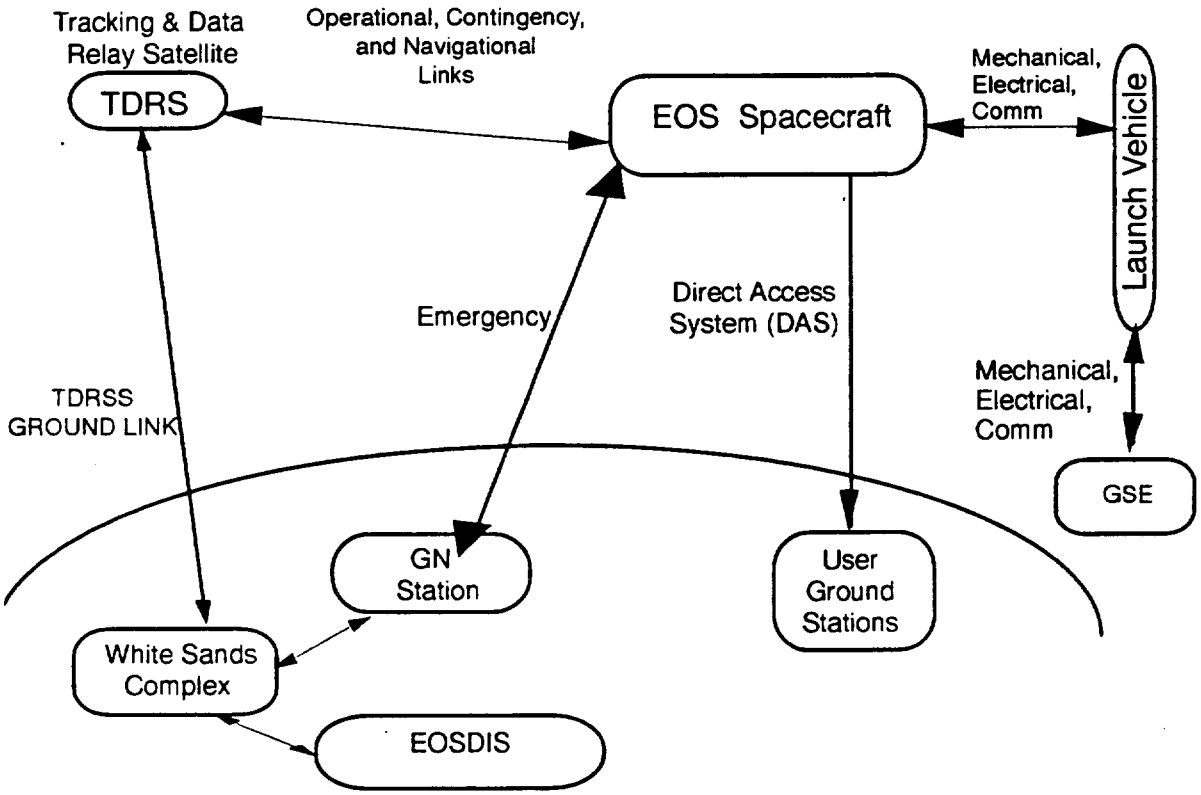

Figure 8. External Spacecraft Interfaces

3.5.1 Launch Vehicle

The Spacecraft is designed for launch on an intermediate class launch vehicle. Principal interfaces to the launch vehicle and support equipment include the physical/mechanical interface by which the Spacecraft is mounted to the launch vehicle booster adapter, electrical interfaces to the ground support equipment (GSE), hardline and RF communication interfaces, and environmental compatibility. The launch vehicle interfaces are documented in the Launch Vehicle Interface Requirements Document, IS20008503.

3.5.2 TDRSS Interface

The TDRSS communications satellite system provides the primary means of communication between the Spacecraft and ground stations. TDRSS interface design complies with Spaceflight Tracking and Data Network User's Guide (STDN 101.2). The TDRSS forward link services are required to support TDRSS Onboard Navigation System (TONS) usage. Key TDRSS interface characteristics are given in Table II. The RF communication interface requirements for the TDRSS interface are documented and controlled by the Radio Frequency Interface Control Document (ICD–104), IS20008504.

Table II. Key TDRSS Interface Characteristics

TDRSS Service	Link Characteristics	
Ku–band Single Access (KSA)	**Antenna:** **Return:**	High–gain antenna, RHC or LHC polarized Two balanced channels, 75 each, 150 Mbps or one single channel at 150 Mbps, DG2
S–Band Single Access (SSA)	**Antenna:** **Forward:** **Return:**	High–gain antenna, LHC or RHC polarized 10 kbps, two–way ranging, and return Doppler Tracking Two unbalanced channels, 16 kbps each DG1 Modes 1, 2, or 16 kbps and 256 kbps, DG1 Mode 3
	Antenna: **Forward:** **Return:**	Omni antenna, RHC polarized 125 bps, two–way ranging and return Doppler Two unbalanced channels, 1 kbps total, DG1 Modes 1, 2
S–band Multiple Access (SMA)	**Antenna:** **Forward:** **Return:**	High–gain antenna, LHC polarized 1 kbps, two–way ranging and return Doppler Tracking Two unbalanced channels, 16 kbps each, DG1 Modes 1, 2

3.5.3 Ground Network (GN) Interface

An emergency communications link with the GN stations provides for S–Band commands and telemetry in case the primary TDRSS link is unavailable. During interruption of TDRSS support, Spacecraft RF communication links are provided by the GN. The GN consists of GSFC–managed stations at Bermuda and Meritt Island Florida, with 9–meter antennas. The Spacecraft will not transmit telemetry to the GN unless commanded to do so. The EOS–AM Spacecraft will have two transponders that are always operating in the receive mode. These receivers are constantly searching for either a TDRSS or a GN signal. This ensures an automatic link to the appropriate communication link. The GN interface requirements are also documented and controlled by the RF ICD, IS20008504.

The Spacecraft will interface with the EOSDIS via the GN Interface. The EOSDIS will be a geographically distributed system that will support the operation and management of EOS in–orbit instruments and facilitate a wide range of scientific research. To do so, EOSDIS will support the acquisition, processing, storage, and distribution of the data acquired by these instruments and Spacecraft.

3.5.4 Direct Access System Interface

Real–time transmission of science data from instruments will be provided to the user community via the DAS. The DAS communication link provides real–time science data from the EOS–AM Spacecraft Instruments directly to the users (science community) independent of the EOSDIS. The DAS will downlink science data, potentially, to modified LANDSAT ground stations and/or other user ground stations yet to be defined. The ground stations will be capable of receiving the X–Band signals as the EOS Spacecraft passes over the station.

The DAS will provide three services: Direct Broadcast (DB), Direct Downlink (DDL), and Direct Playback (DP) services to downlink instrument data. The DB and DDL services will be provided during normal Spacecraft operations. The DP service will be used in contingency conditions only, i.e., the Spacecraft is incapable of normal SSR playback via HGA–TDRSS link.

3.5.5 Spacecraft Processing Interfaces

The Spacecraft includes provisions for interfacing with GSE and the facilities required for Spacecraft integration, test, and prelaunch operations. These interfaces allow handling, testing, and operation of Spacecraft and instrument equipment prior to launch.

3.6 Spacecraft Operations

3.6.1 Mission Phases

The EOS–AM mission is made up of distinct mission phases, each with its own characteristics and purpose. The mission phases of the EOS–AM Spacecraft and the significant events which define the transition from from one phase to another are shown in Figure 9.

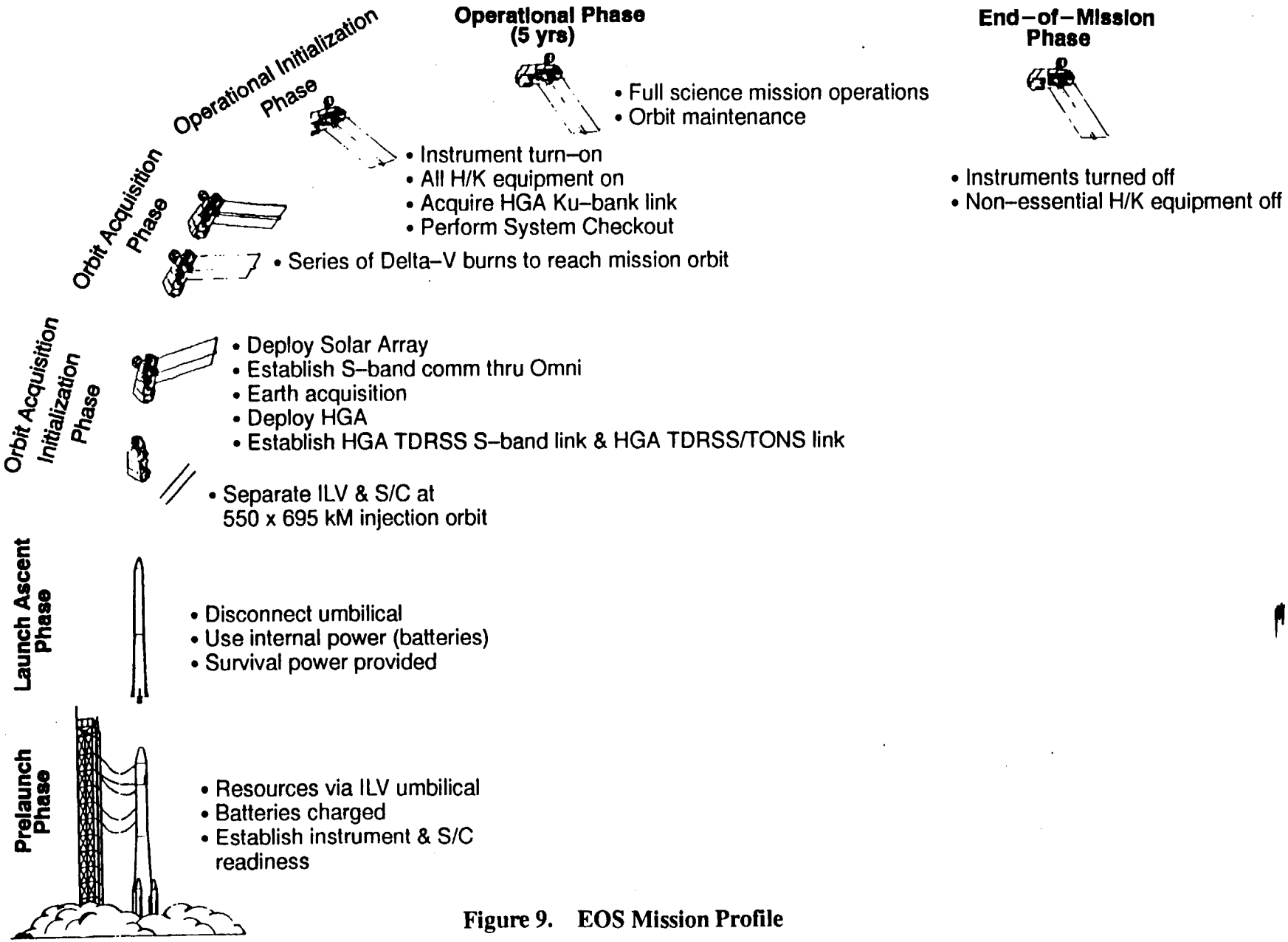

Figure 9. EOS Mission Profile

Prelaunch:	The flight vehicle system (Spacecraft, launch vehicle, and all associated ground elements) readiness for launch is established.
Launch/Ascent:	The intermediate class launch vehicle performs burn–stages zero, one, and two, and then initiates separation of the Spacecraft from the launch vehicle, placing the Spacecraft in the 550 by 700 km injection orbit.
Orbit Acquisition Initialization:	The Spacecraft attains a stable earth–oriented attitude, establishes an S–band communications link, deploys the Solar Array to attain a positive energy balance, and deploys the High Gain Antenna, while still in the injection orbit.
Orbit Acquisition:	The Spacecraft performs a series of delta–V maneuvers with the delta velocity hydrazine (monopropellant) thrusters in order to raise the Spacecraft altitude from the injection orbit to the operational orbit. During the delta–V maneuvers, the Spacecraft maintains the benign system configuration established in the prior phase.
Operational Initialization:	The Spacecraft performs a complete checkout of the bus housekeeping equipment and instruments, and establishes the fully operational system state.
Operational:	The Spacecraft maintains itself in proper orbit and provides full resources to instruments as required to carry out the science mission.
End–of–Mission:	The End–of–Mission Phase begins with the decision to terminate the Operational Mission Phase, thus completing the Spacecraft mission science objectives. As there are no planned activities for this phase, the Spacecraft will essentially remain in a survival state indefinitely.

3.6.2 Modes

Each mission phase is characterized by the "system" operating modes used to support that mission phase. A system mode is an operational configuration with a set of minimum requirements distributed to each bus subsystem and a set of minimum resources to be provided to the instruments.

System modes include (1) Ground Test Mode, (2) Launch/Ascent Mode, (3) Standby Mode, (4) Science Mode, (5) Delta–V Mode, (6) Survival Mode, and (7) Safe Mode. Mode transitions can be seen in Figure 10. These modes can be defined as either backup or primary modes for the mission phases in which they are used. Primary system operating modes are defined as scheduled or planned operating modes for that mission phase. Back–up system modes are defined as unplanned modes that are typically entered following a major Spacecraft Bus anomaly. Examples of primary modes include Science and Delta–V modes while Survival and Safe modes are examples of back–up modes.

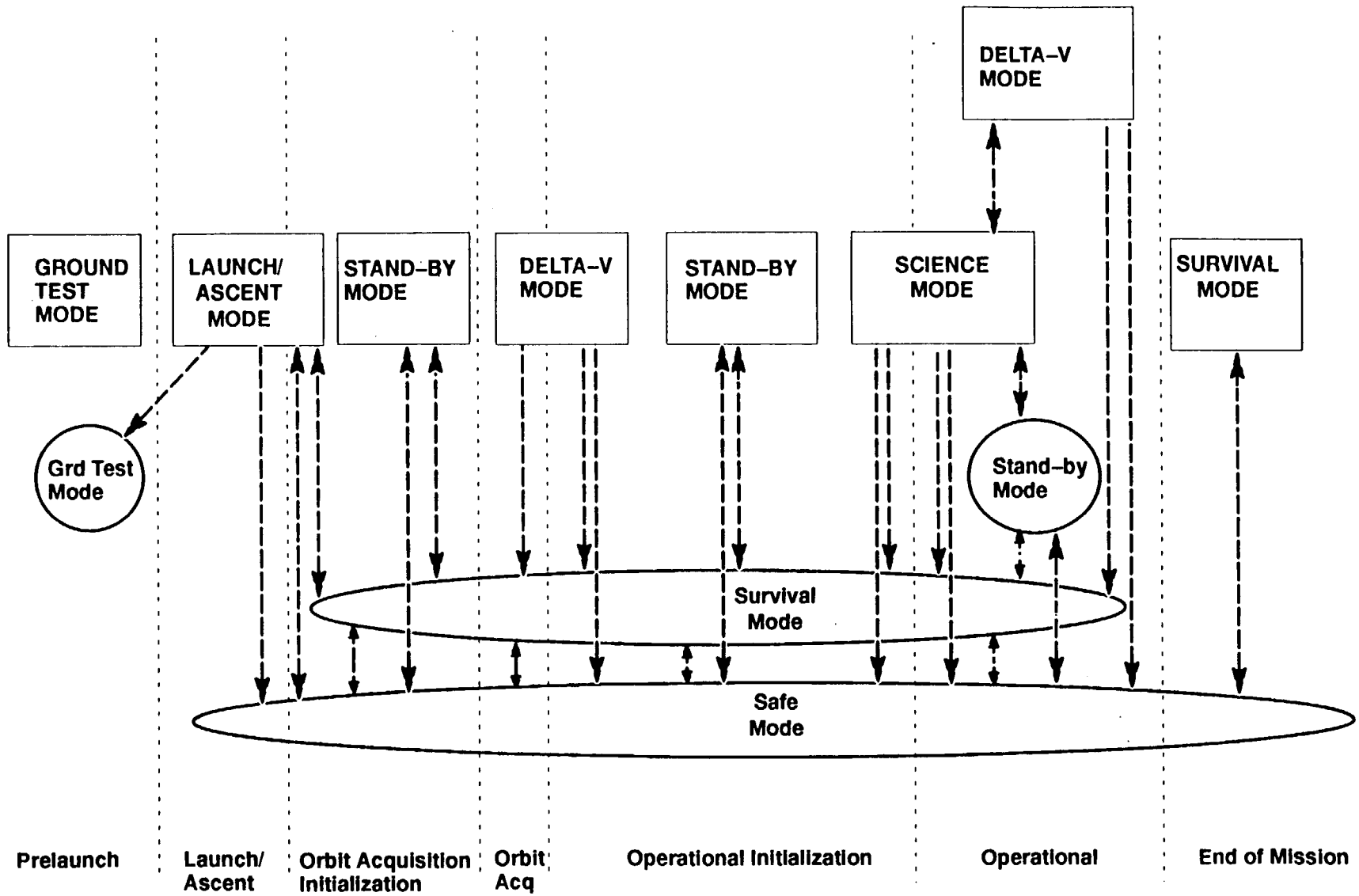

Figure 10. Phase and Mode Transitions

During the Operational Mission Phase, the Spacecraft will nominally be in the primary Science Mode, in which Instrument data acquisition occurs. The Spacecraft may transition to Delta–V Mode, another primary mode, as required for periodic orbit adjustments. In addition, the Spacecraft may transition to a backup mode, such as Survival or Safe Mode, if an anomalous condition is detected.

Mode transitions may be ground commanded, and on–board logic can autonomously control mode transitions during predefined anomalous conditions. The Spacecraft Controls Computer (SCC) is loaded with a Telemetry Monitoring (TMON) function to monitor housekeeping and instrument parameters to detect anomalous conditions. The SCC is also loaded with Failure, Detection, Isolation, and Recovery (FDIR) algorithms which will autonomously switch Spacecraft and instrument equipment to protect it from time–critical failures. More detail of Spacecraft modes and transitions between modes are described in the following paragraphs.

Ground Test Mode

The Ground Test Mode is used in the Prelaunch Phase of the mission, following integration of the Spacecraft with the launch vehicle. In this mode the Spacecraft is essentially in a "check–out" state, receiving power via the launch vehicle umbilical. The readiness and comprehensive performance of the Spacecraft is established. During this mode, the batteries are being charged, and equipment is powered as required for low–rate commanding and telemetry. Telemetry is provided to the GSE via the launch vehicle umbilical.

Launch/Ascent Mode

The Launch/Ascent Mode is the Spacecraft's operational configuration during and immediately following the boost to the injection orbit on the launch vehicle. Once separation from the launch vehicle is detected by on–board logic and telemetry monitoring, the Spacecraft will use on–board logic to perform four early mission activities, including: (1) an attitude maneuver to obtain an earth–oriented attitude, (2) deployment of the solar array to support the bus load and begin battery recharge, (3) establishment of an S–band communication link, primarily with TDRSS via the omni antennas, and (4) deployment of the high gain antenna. All of these pre–programmed activities shall, as a backup, accept ground commanded initiation, provided that a communication link to the ground has been established.

Standby Mode

The Standby Mode is a "non–science" mode that is used during system check–out, during quiescent periods, or as back–up to the Science Mode. As a backup mode, Standby is used when a problem arises with the ability to collect or transmit instrument science data. Although instrument science is not supported in this mode, instrument housekeeping functions can remain operational. This is not a power critical mode and operating housekeeping components will not be automatically turned off (unless they have failed) upon entrance to the Standby Mode. Housekeeping equipment needed to support instrument science (i.e., high–rate data system) is not required in this mode.

Science Mode

The Science Mode is the operational configuration in which the Spacecraft provides the full complement of resources necessary to meet science mission objectives, including fine attitude control, high–rate data handling, storage and transfer, full electrical power, and thermal control. Science mode is the primary mode used during the Operational Mission phase.

Delta–V Mode

The Delta–V mode is a "propulsive" mode used to either raise altitude from the injection orbit to mission operational altitude or to provide periodic correction to mission orbit. The orbital corrections will either be in–plane maneuvers or out–of–plane maneuvers. This mode is used during the Orbit Acquisition, Operational Initialization, and Operational mission phases and shall utilize monopropellant engines for delta–V.

Survival Mode

The Survival Mode is a minimal power or power critical mode in which only essential Spacecraft functions (i.e., low–rate commanding/telemetry, survival heaters) will be supported. Transition into the survival mode will cause non–essential housekeeping equipment and instruments to power–down. The SCC will maintain full control of the Spacecraft while in the Survival Mode.

Safe Mode

The Safe Mode is a state in which the Spacecraft is capable of operating partially or completely independent of the SCC depending on the problem which caused the entry into Safe Mode. Specifically, the Spacecraft will be considered operating in the Safe Mode as long as the attitude control electronics (ACE) performs the attitude control processing. The Safe Mode is a back–up mode that may be used during the Orbit Acquisition Initialization, Orbit Acquisition, Operational Initialization, Operational Mission, and End–of–Mission phases.

3.7 Spacecraft Elements

3.7.1 Spacecraft Bus Subsystems

The Spacecraft is conceptually partitioned into subsystems which perform well–defined, logically connected functions that are required for operation of the Spacecraft. These subsystems are:

Structures and Mechanisms Subsystem (SMS)

The SMS is designed to structurally support the instruments, equipment modules, and other Spacecraft bus equipment. It provides the overall framework for mounting and positioning the instruments while maintaining precise pointing and alignment. The primary structure of the Spacecraft is constructed of lightweight, graphite–epoxy tubular members with titanium node fittings that provide a stable framework for Spacecraft operations throughout the mission life. Mechanisms such as the solar array drive and HGA deployment system provide the means to operate the solar array and deploy the high–gain antenna.

Thermal Control Subsystem (TCS)

The TCS will maintain all Spacecraft component and instrument interfaces within allowable thermal limits. Passive thermal control techniques, used wherever possible, include multilayer insulation (MLI), isolators and thermal finishes. Heaters are used where necessary. Heat–pipe radiator panels are used in the equipment modules to reject the heat dissipated by Spacecraft components. A capillary–pumped heat transport system (CPHTS) provides thermal control to those instruments which do not have sufficient radiator area. Temperature telemetry data is provided throughout the Spacecraft in order to monitor the performance of this subsystem.

Electrical Power Subsystem (EPS)

The EPS provides all Spacecraft instruments and Spacecraft bus equipment with electrical power during all mission phases. The main power bus will normally be regulated to 120 Vdc. The 120 Vdc system is driven by the high instrument power requirements and the volume constraints of the launch vehicle fairing. Power is generated by a single–wing photovoltaic solar–cell array. Rechargeable Nickel–Hydrogen (NiH_2) batteries are used to store power, and the excess solar array power is controlled through the use of a Sequential Shunt Unit (SSU).

Electrical Accommodation Subsystem (EAS)

The EAS provides all inter–subsystem and inter–component electrical connection, and implements the system and subsystem level grounding and EMC requirements of the EOS Spacecraft. Additionally, the EAS provides the electronics for deployment mechanisms used on the Spacecraft such as the arming and firing circuits of the pyrotechnic release mechanisms.

Guidance, Navigation, and Control Subsystem (GN&CS)

The GN&CS determines the Spacecraft orbit and attitude, autonomously controls the attitude, and controls actuators for orbit adjustment and appendage pointing. Four reaction–wheel assemblies (RWAs) are used for primary attitude control. Three magnetic torque rods are used for momentum unloading. Thrusters and/or the RWAs are used to perform slew maneuvers. Navigation services will be supported primarily via the TDRSS Onboard Navigation System (TONS). In all on–orbit Spacecraft modes except Safe Mode, the GN&CS attitude determination and control algorithms are executed by flight software in the C&DHS Spacecraft Controls Computer.

Propulsion Subsystem (PROPS)

The PROPS provides thrust to support attitude and orbit control during all mission phases following the Launch/Ascent Phase. After orbit achievement, the propulsion module provides delta–V impulses for orbit maintenance (drag make–up and

inclination correction) and attitude control impulses for backup momentum management and attitude control. Thruster operations are controlled in accordance with commands received from the GN&CS or from ground controllers via the C&DHS. Hydrazine is used as a monopropellant for the attitude control and delta-V thrusters.

Command and Data Handling Subsystem (C&DHS)

The C&DH subsystem provides telemetry data acquisition and storage, collection, formatting, routing, and storage of science data for downlink, generation of time and frequency references, and distribution of real-time and stored commands. The C&DHS will also provide hard-line telemetry to the launch vehicle umbilical interface for pre-launch check-out.

Communication Subsystem (COMMS)

The COMMS provides all external interfaces for Spacecraft data and tracking signals. It receives and demodulates all command data destined for Spacecraft subsystems and instruments, modulates and transmits all data from Spacecraft subsystems and instruments which is destined for the ground, and receives, decodes, and transmits, as appropriate, all signals used for Spacecraft tracking.

Flight Software System (FSWS)

The flight software system (FSWS) consists of both software and firmware, distributed across C&DHS components. The FSWS will monitor, control and provide the necessary services and mission support needed to sustain the Spacecraft throughout its mission. The FSWS is primarily implemented in the Ada programming language, although certain processor functions may be programmed in assembly language.

The principal relationships among the subsystems are indicated in the Spacecraft functional block diagram, Figure 11. Figure 12 identifies system services and functions provided by each subsystem to other subsystems and to Instruments. The individual subsystems are described, in detail, in the following sections of this document.

3.7.2 Spacecraft Bus Major Assemblies

The Spacecraft bus is modular and consists of the subsystems already defined. The modularity is accomplished by packaging, where practical, functionally related equipment into major assemblies including equipment modules (EMs) and equipment panels. Each of the major assemblies will be assembled independently and tested as a unit prior to integration with the Spacecraft core assembly. Layouts of the major assemblies will, to the extent practical, ensure that any component contained within the assembly can be removed without having to remove any other component. The EMs will have a panel that can be removed to provide access to equipment contained within the EM. Removal of this panel will not requiring the removal of any other Spacecraft equipment.

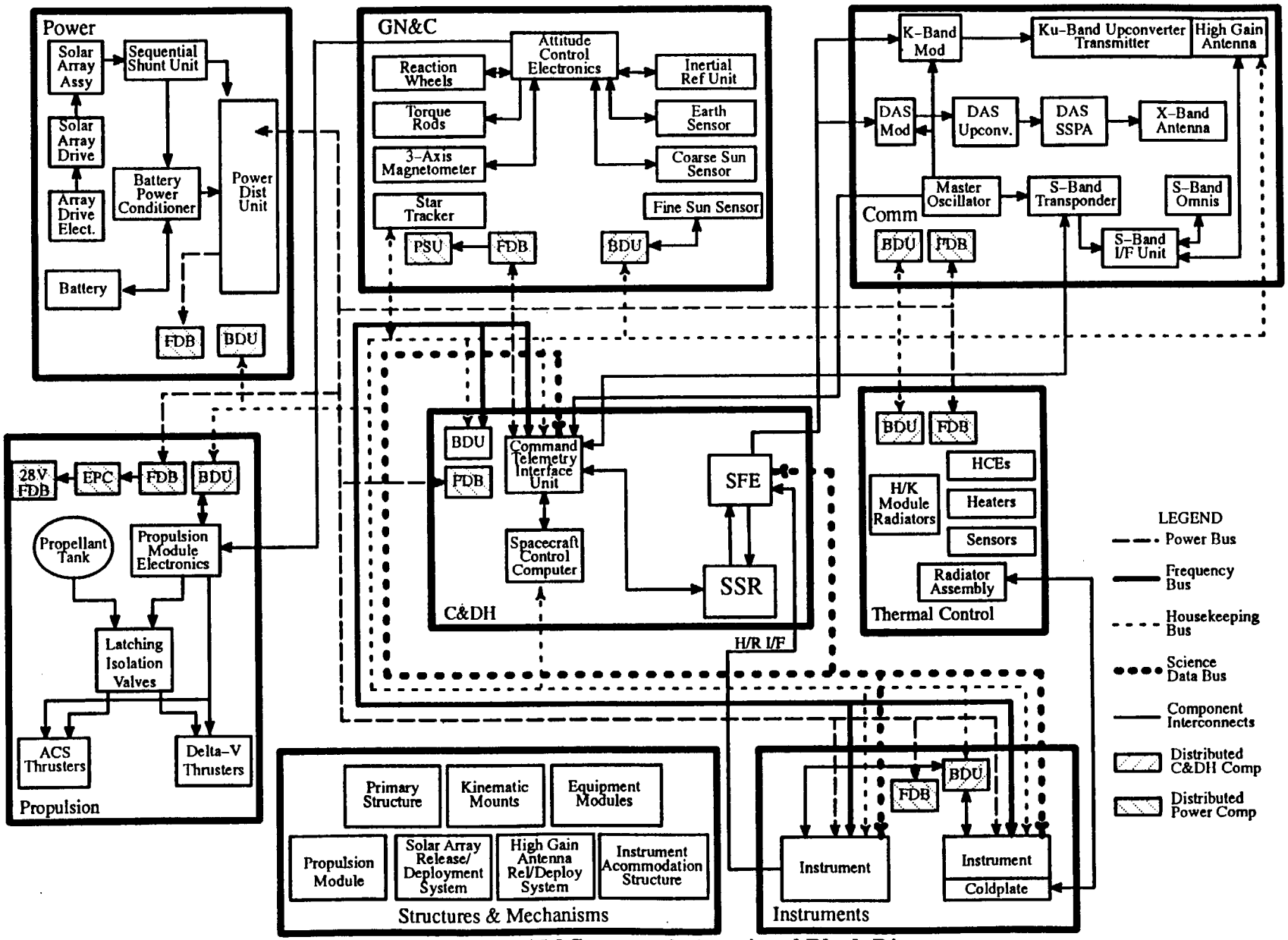

Figure 11. EOS–AM Spacecraft Functional Block Diagram

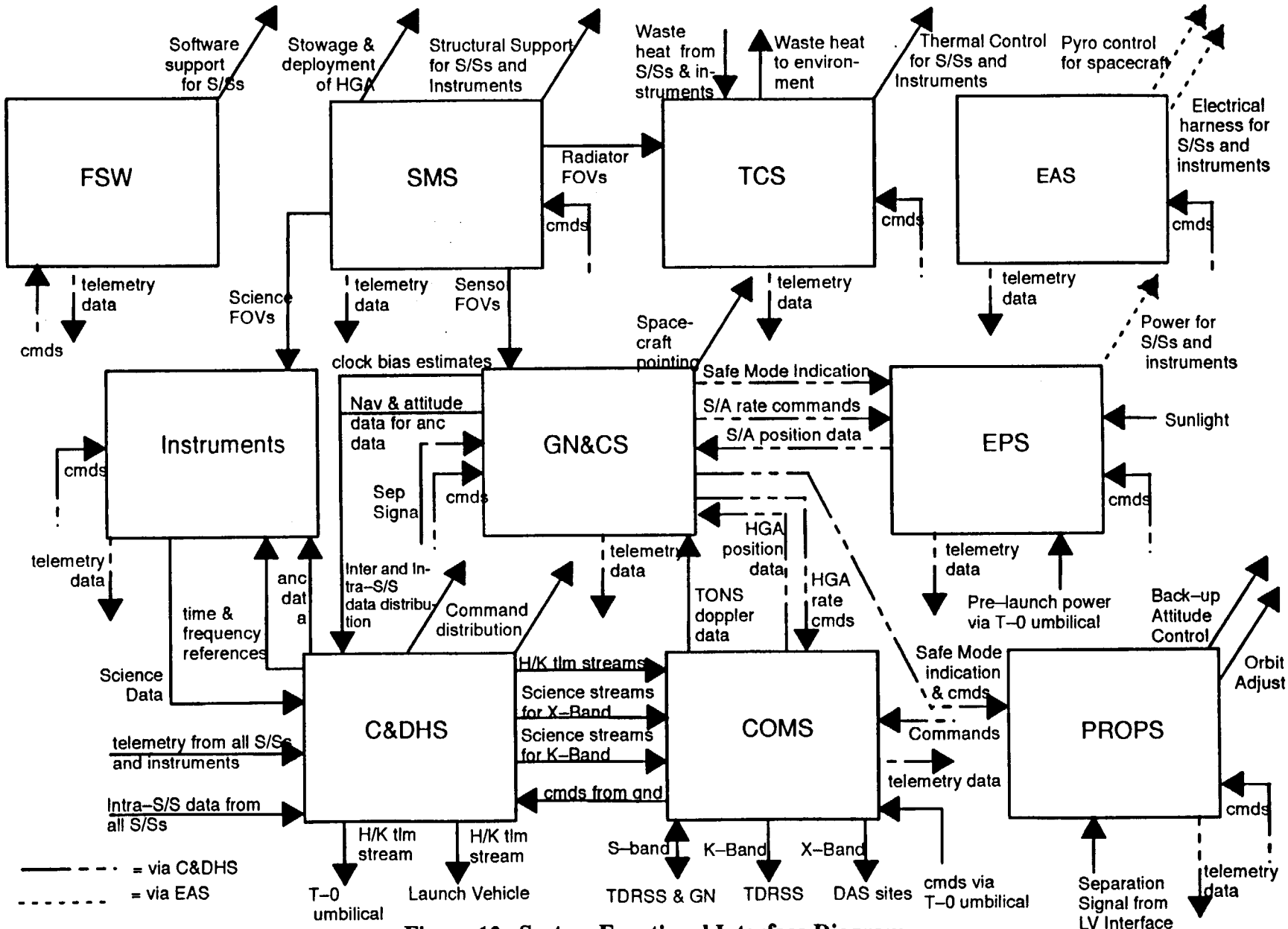

Figure 12. System Functional Interface Diagram

There are five different types of EMs on the EOS–AM Spacecraft. They are: GN&C sensor EM, recorder EM, power EM with battery panel, COMM/C&DH EM and reaction wheel assembly (RWA) EM. The EMs are mounted to the Spacecraft by kinematic mounts, which allows for relative thermal expansion/contraction between the module and Spacecraft structure, and limits the transfer of structural loads from the Spacecraft to the module. There are also two panels which provide mounting surfaces for subsystem components. These panels are the DAS Panel, and the battery panel (hex bay).

The locations of major assemblies when the Spacecraft is in its launch configuration are shown in Figure 13. The Spacecraft bus includes the following major assemblies:

Spacecraft Core

While the Spacecraft core itself is not a major assembly, it provides the necessary structural support and mounting structures for the EMs, equipment panels, appendages, and the instruments, as well as other subsystem equipment not housed in major assemblies.

Propulsion Module

The propulsion module houses the propulsion system equipment needed for delta–V maneuvers, orbit maintenance, and back–up attitude control. This includes propellant and pressurant tankage, plumbing, thrusters, and associated power, thermal and C&DHS control equipment. The propulsion module will have the capability to monitor tank pressure and temperature via GSE in the absence of Spacecraft power during all pre–launch operations.

HGA Assembly

The HGA assembly includes the high-gain antenna used for TDRSS communications, its deployment and pointing mechanisms, the Ku–band RF transmission equipment, and associated harnessing and waveguide. The HGA will be attached to the Spacecraft bus so that the reflector and subreflector may be removed and re–installed on the Spacecraft at any time before encapsulation in the launch vehicle payload fairing.

Solar Array Assembly

The solar array assembly includes a flexible blanket with Gallium-Arsenide photovoltaic solar–cells and its deployable mast, the associated equipment for stowage during ascent and deployment on–orbit, a sequential shunt unit, sun sensors, and various performance monitoring and control equipment.

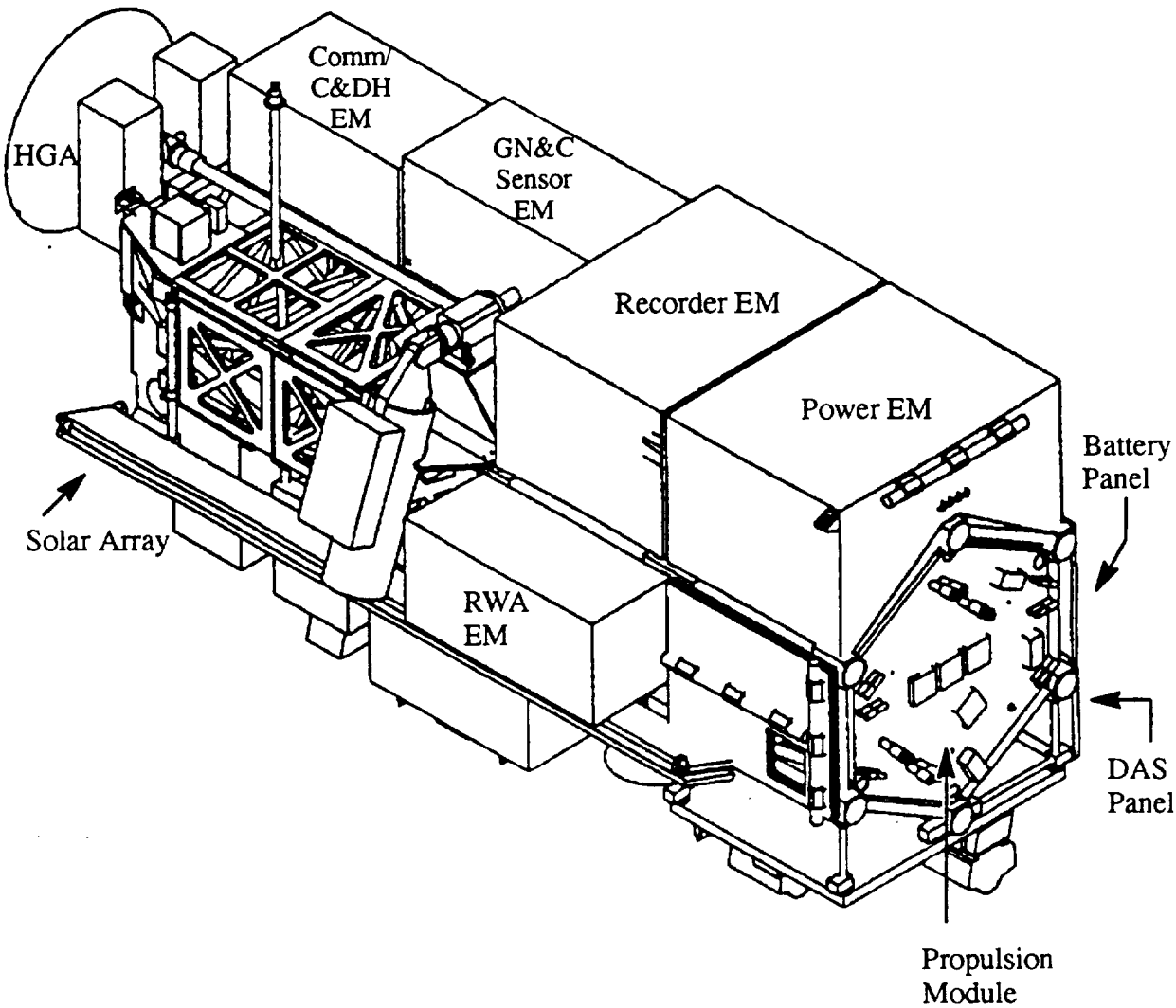

Figure 13. EOS–AM Spacecraft – Major Assemblies

GN&C Sensor Equipment Module

The GN&C sensor EM houses sensor equipment used by the GN&CS for attitude determination, the interface electronics for the various attitude sensors and effectors, the equipment for Safe Mode control, and associated power, thermal, and C&DHS control and interface equipment. Figure 14 depicts the equipment layout of this EM.

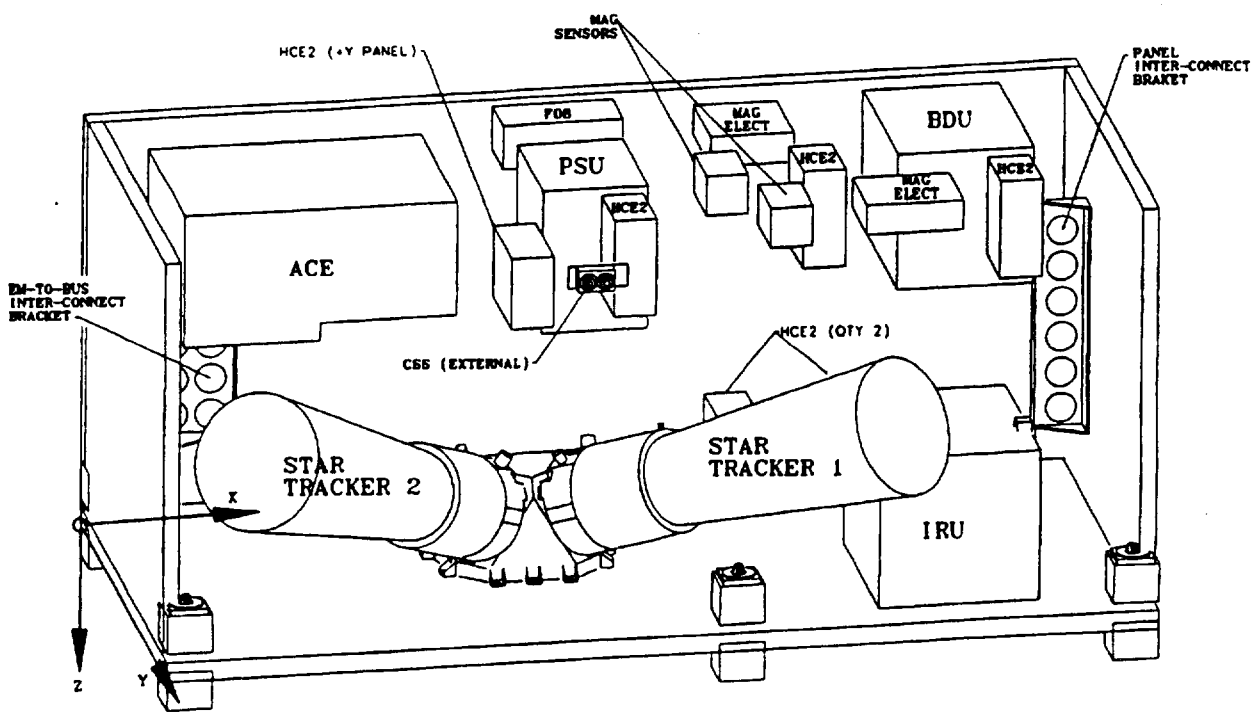

Legend:

ACE	Attitude Control Electronics
BDU	Bus Data Unit
CSS	Coarse Sun Sensor
FDB	Fuse Distribution Box
HCE	Heater Control Electronics
IRU	Inertial Reference Unit
MAG	Magnetometer
PSU	Power Switching Unit
TAM	Triaxial Magnetometer

Figure 14. GN&C Sensor EM

Recorder Equipment Module

The recorder EM houses recorders that record and playback housekeeping telemetry and Instrument science data. It also houses the C&DHS equipment which formats and switches the various streams of science data for recording and transmission, along with associated power and thermal control equipment. Figure 15 depicts the equipment layout of this EM.

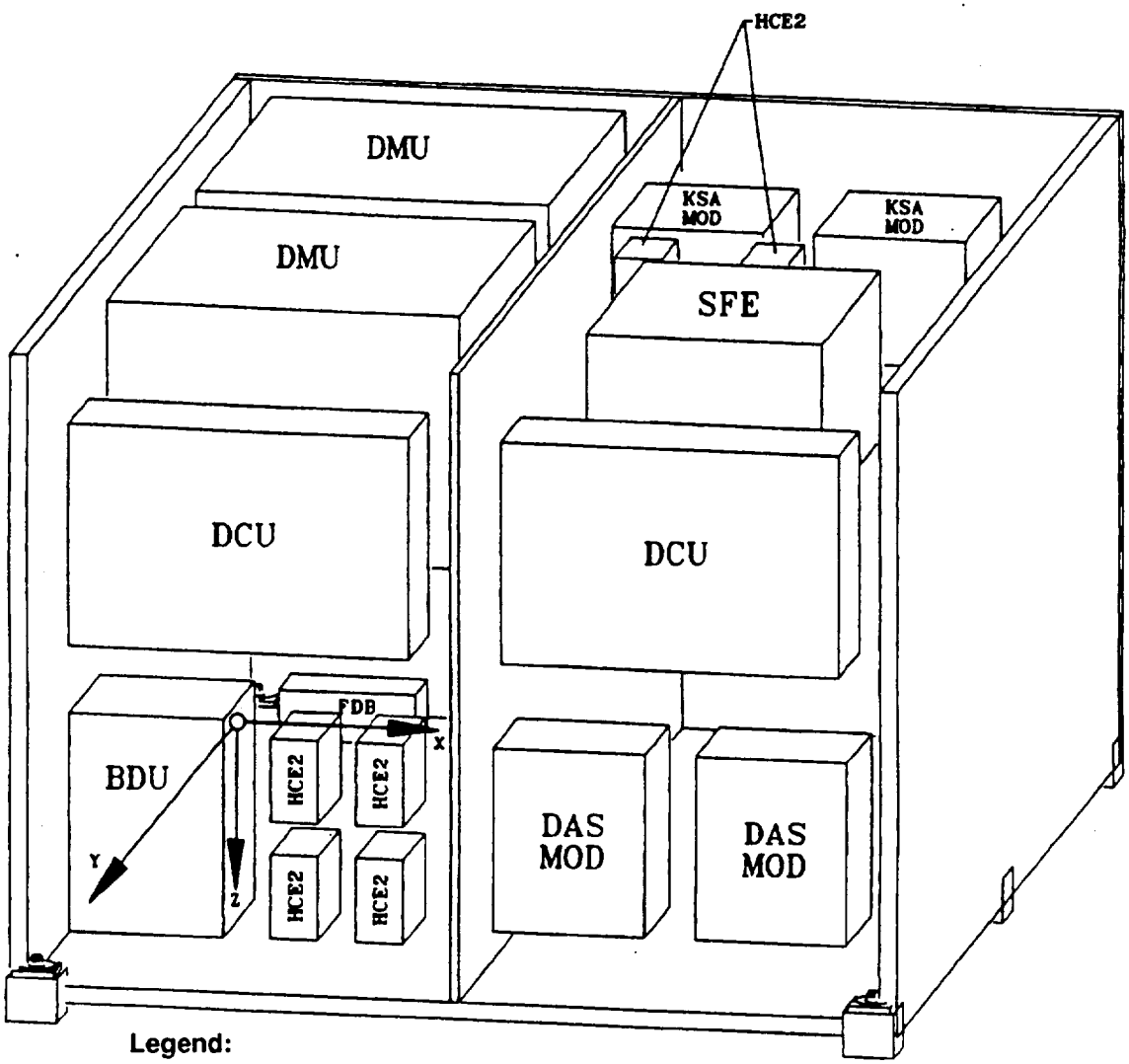

Legend:

BDU	Bus Data Unit
DAS	Direct Access System
DCU	Data Controller Unit
DMU	Data Memory Unit
FDB	Fuse Distribution Box
HCE	Heater Control Electronics
KSA	K–band Single Access
MOD	Modulator
SFE	Science Formatting Equipment

Figure 15. Recorder EM

Power Equipment Module

The power EM houses a battery panel and its associated charge/discharge control electronics, the equipment which regulates and distributes power to the various Spacecraft loads, and associated thermal control and C&DHS interface equipment. The Power Module will provide battery temperature, battery pressure, and battery voltage monitors for GSE to monitor the condition of the batteries in the absence of Spacecraft power. Figure 16 depicts the equipment layout of this EM.

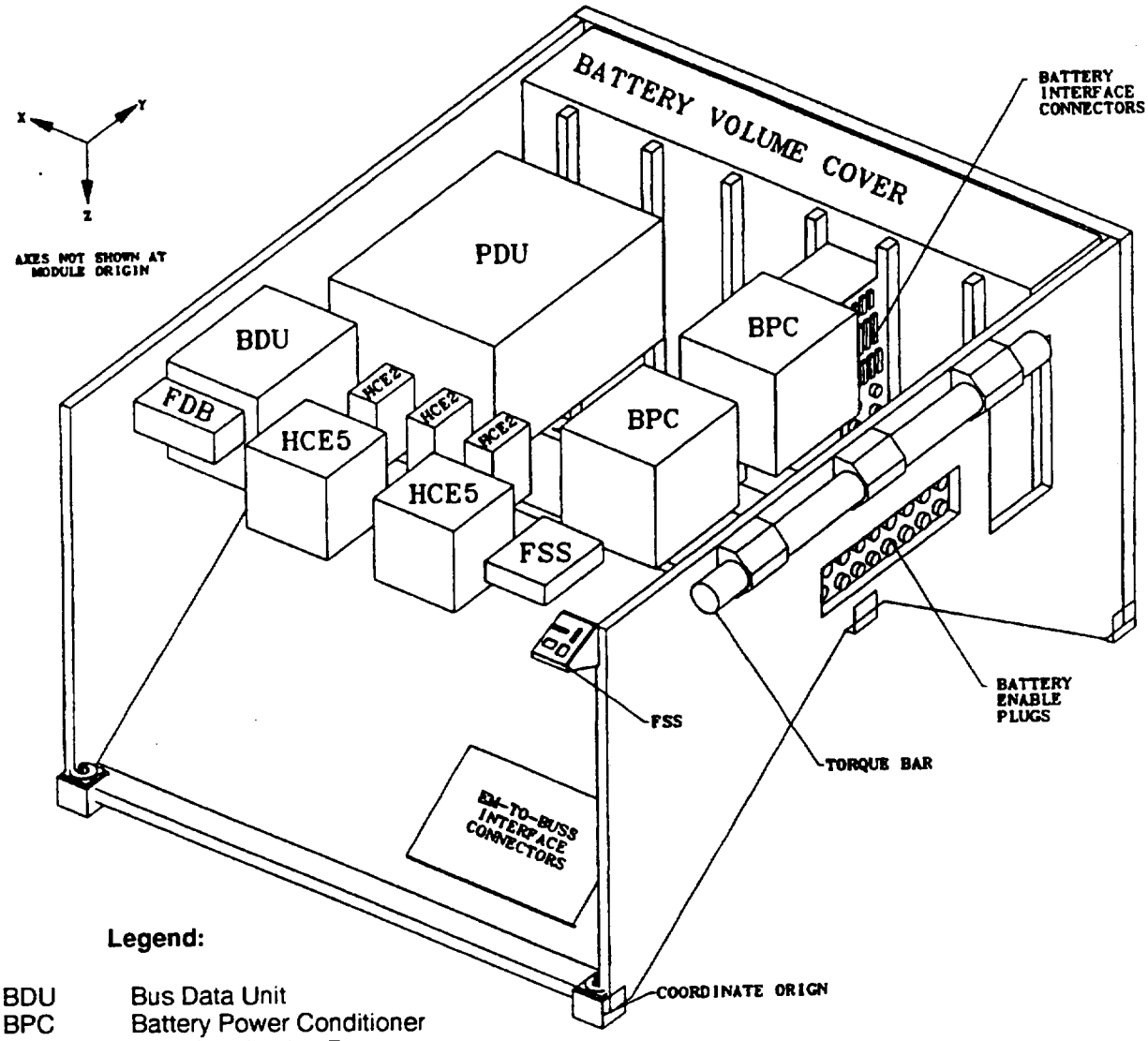

Legend:

BDU	Bus Data Unit
BPC	Battery Power Conditioner
FDB	Fuse Distribution Box
FSS	Fine Sun Sensor
HCE	Heater Control Electronics
PDU	Power Distribution Unit

Figure 16. Power EM

COMM/C&DH Equipment Module

The COMM/C&DH EM houses the S-band RF equipment for command reception and telemetry transmission and the C&DHS equipment for command processing and distribution. This module also houses the telemetry collection and formatting equipment, the Spacecraft Controls Computers, and the control electronics for the solar array drive motor, along with power, thermal, and C&DHS control and interface equipment. Figure 17 depicts the equipment layout of this EM.

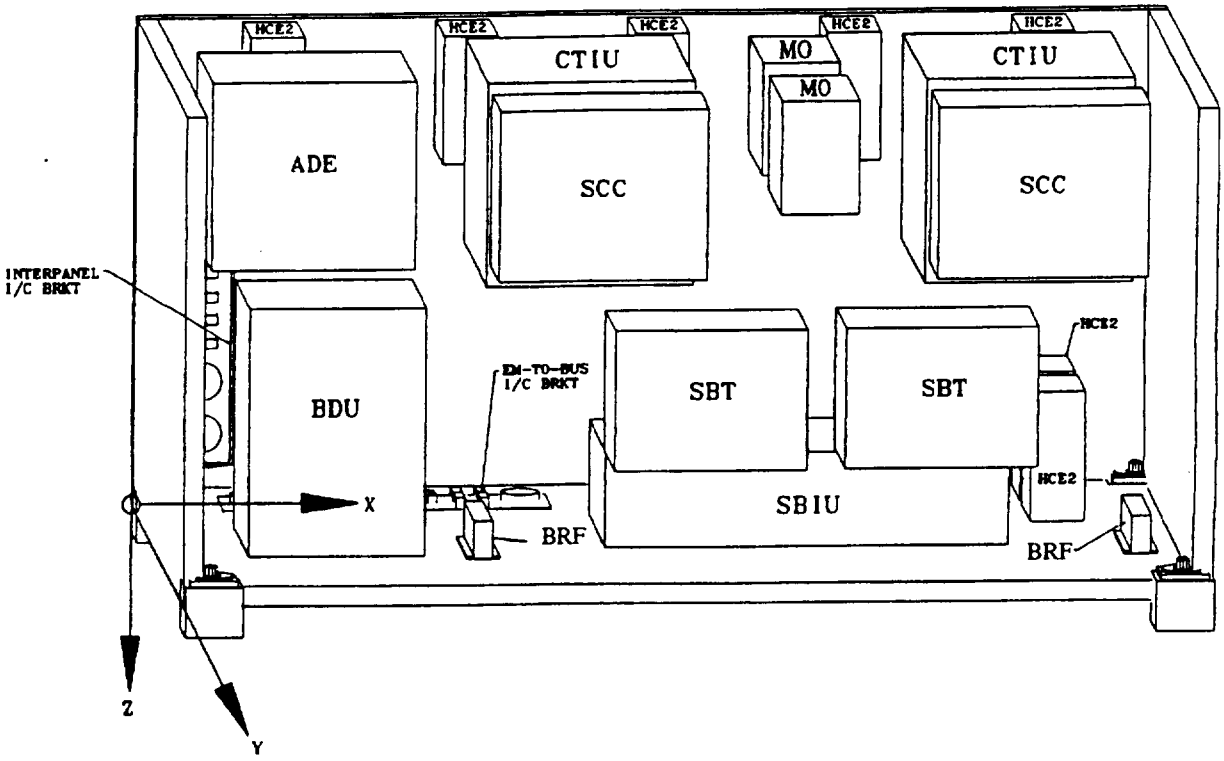

Legend:

ADE	Array Drive Electronics
BDU	Bus Data Unit
BRF	Band Reject Filter
CTIU	Command Telemetry Interface Unit
FDB	Fuse Distribution Box
HCE	Heater Control Electronics
I/C BRKT	Interface Connector Bracket
MO	Master Oscillator
SBIU	S-band Interface Unit
SBT	S-band Transponder
SCC	Spacecraft Controls Computer

Figure 17. COMM/C&DH EM

Reaction Wheel Assembly Equipment Module

The reaction wheel assembly EM houses four RWAs (the primary actuators used by the GN&CS for attitude control) along with associated power, thermal control and C&DHS interface equipment. Figure 18 depicts the equipment layout of this EM.

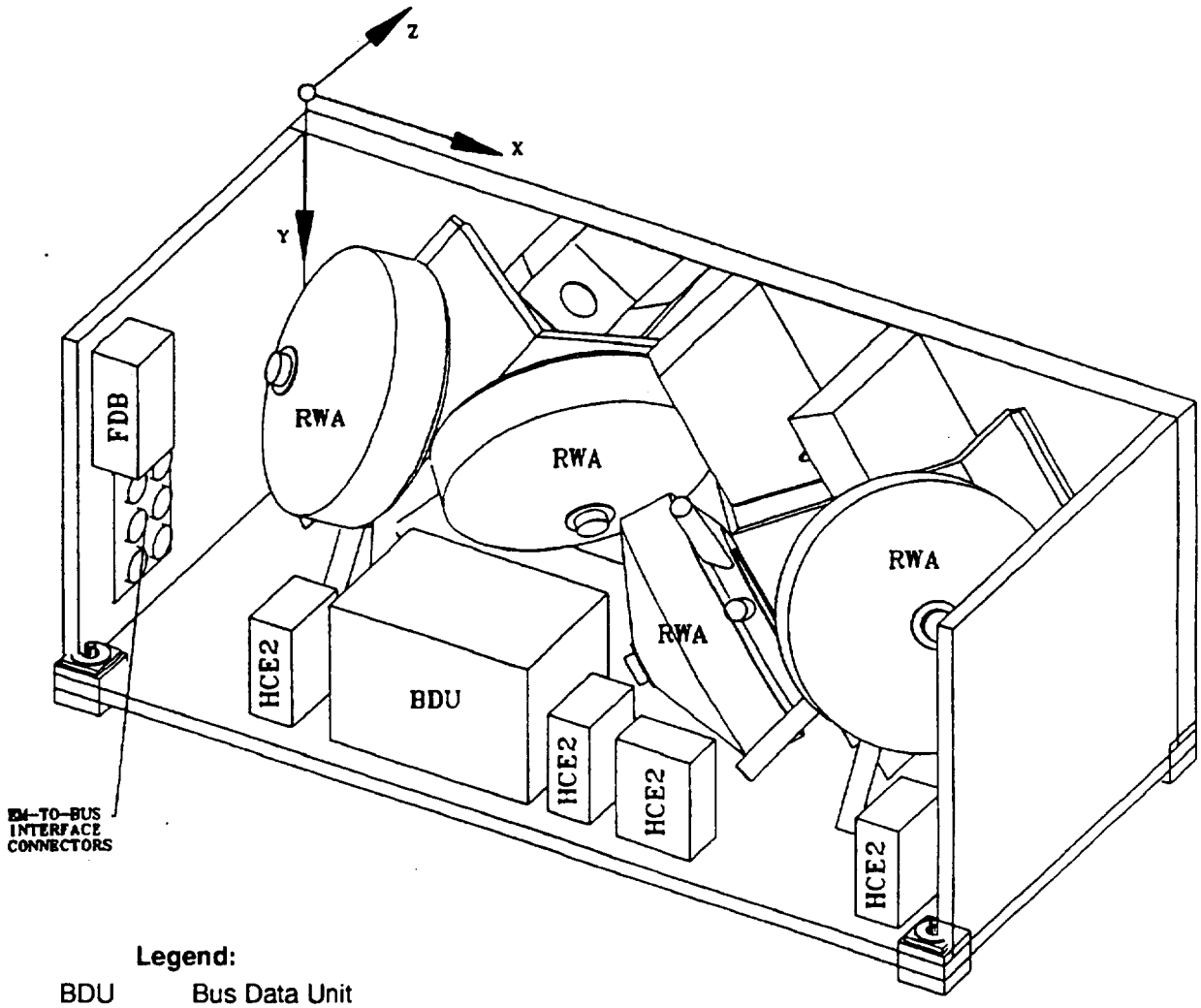

Legend:

BDU	Bus Data Unit
FDB	Fuse Distribution Box
RWA	Reaction Wheel Assembly
HCE	Heater Control Electronics

Figure 18. RWA EM

Battery Panel

The battery panel contains one of the Spacecraft's two battery assemblies (the other is in the power module), and associated thermal control and C&DHS interface equipment. The battery panels will provide the necessary test connections to discharge the batteries at the Spacecraft level I&T. Figure 19 shows the layout of this equipment panel.

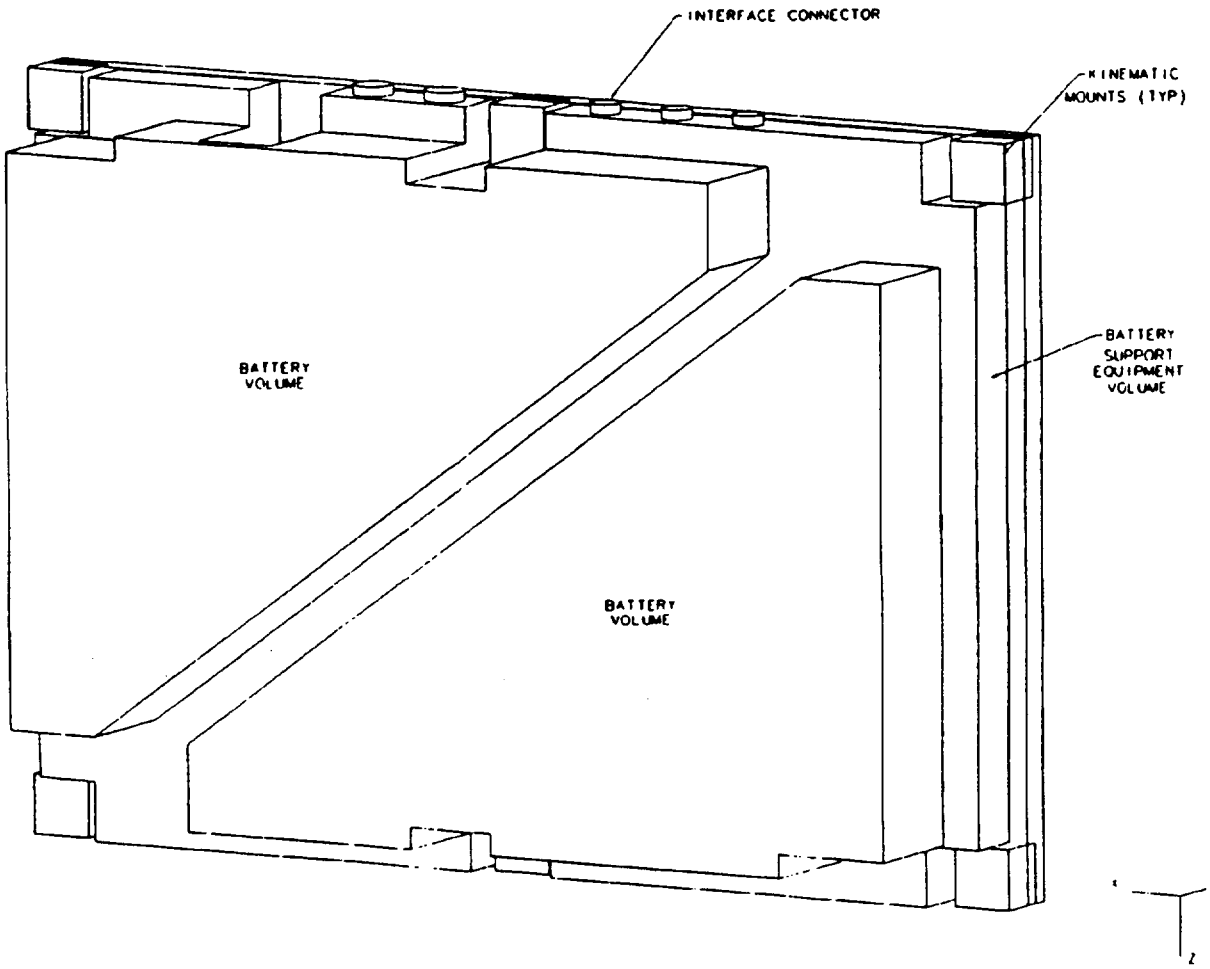

Figure 19. Battery Panel

Direct Access System Panel

The DAS Panel contains the X–band RF transmission electronics for the Direct Broadcast, Direct Downlink, and Direct Playback services, and associated thermal control and C&DHS interface equipment. Figure 20 shows the layout of this equipment panel.

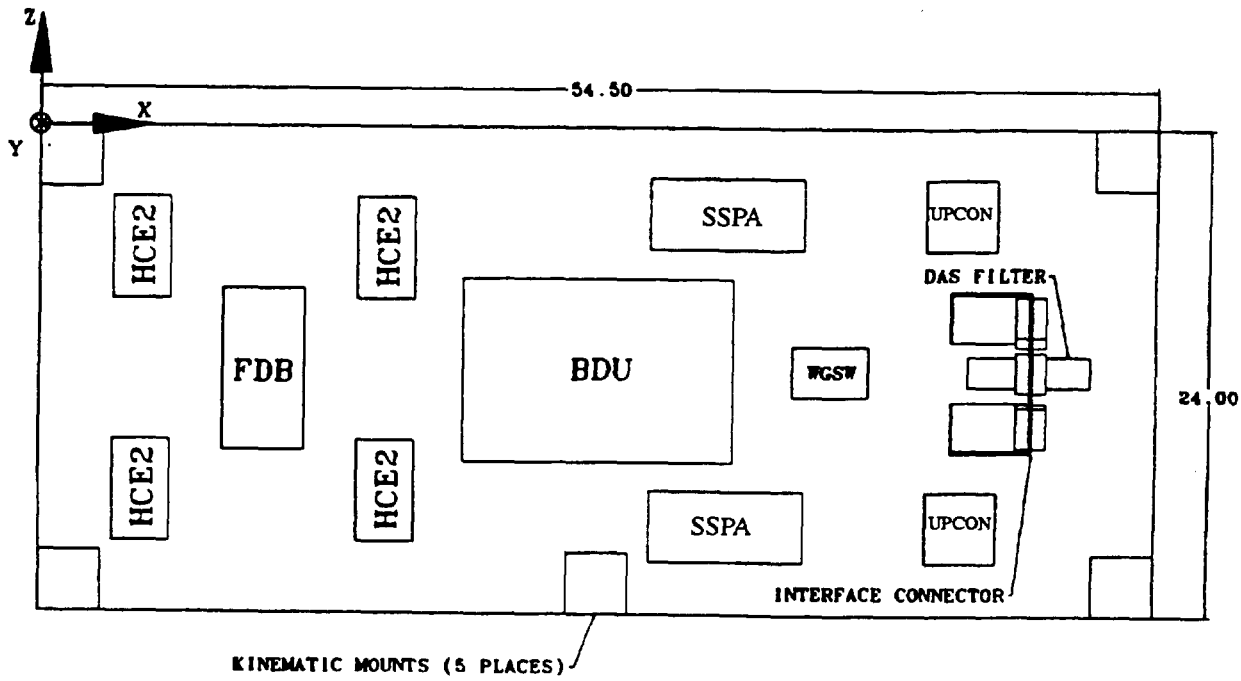

Legend:

SSPA	Solid State Power Amplifier
BDU	Bus Data Unit
FDB	Fuse Distribution Box
RF	Radio Frequency
UPCON	Upconverter
WGSW	Wave Guide Switch

Figure 20. DAS Panel

3.8 Spacecraft Reliability

The EOS–AM Spacecraft is designed to be highly reliable with single fault tolerant subsystems that will ensure a high probability of fulfilling the its five–year mission life. The criteria for measuring the Spacecraft bus mission success has been defined as the ability to provide the Instruments with the minimum resources and services specified in the Contract End Item Specification, PS20005396, for the entire five–year mission. The ability to transmit all recorded science data to the EOSDIS via Ku–band TDRSS or X–band DAS links is considered the minimum science transmission capability required for mission success. Figure 21 shows the reliability allocation goals for the Spacecraft bus and the individual subsystems.

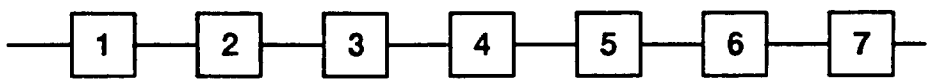

Spacecraft Bus Reliability Block Diagram

Subsystem	Allocated Ps Total (5 Yrs)
1. EPS	0.97
2. PROPS	0.99
3. C&DH	0.843
4. COMM	0.98
5. GN&C	0.96
6. TCS	0.998
7. SMS	0.999
8. EAS	n/a
Total Allocated Probability of Success	**0.759**
Goal	0.75
Margin	0.009

Figure 21. EOS Spacecraft Mission Probability of Success Assessment

The mechanisms within the SMS are designed for very high reliability. The solar array assembly (SAA) and the high–gain antenna (HGA) deployment designs incorporate redundancy in the restraint mechanism design to ensure high reliability. The pyro devices are fully redundant, employing redundant charges and electronics. The solar array drive (SAD) is also designed for reliable operation throughout the mission. Its motor has two sets of windings for redundancy.

The thermal control subsystem design provides for single–fault tolerance with sufficient redundancy to ensure reliable operation throughout the mission. The CPHTS is fully redundant. The equipment module (EM) is fully redundant, utilizing redundant heat pipes, and redundant active heater control. The distributed housekeeping equipment thermal control is also fully redundant, utilizing passive thermal control along with active thermal control, where necessary.

The electrical power subsystem design provides for single–fault tolerance with a high level of redundancy. The solar array design provides string redundancy for reliable operation. The battery assembly design can tolerate the loss of a total of two battery cells failed short (one per panel) or one cell failed open. The array drive electronics (ADE), battery power conditioner (BPC), power distribution unit (PDU), sequential shunt unit (SSU), power switching unit (PSU), and electrical power conditioners (EPC) all provide some level of internal redundancy.

The guidance, navigation, and control subsystem design uses many components which have demonstrated reliable operation on other Spacecraft. The solid state star tracker (SSST), inertial reference unit (IRU), magnetometer, coarse sun sensor (CSS), earth sensor assembly (ESA), reaction wheel assembly (RWA), magnetic torque rods, attitude control electronics (ACE) and the fine sun sensor (FSS) are functionally redundant.

The propulsion subsystem provides sufficient redundancy to ensure reliable operation throughout the mission. The propellant tank is non–redundant, however, it is designed with sufficient margins to ensure reliability. The thruster system contains half–system redundancy. The avionics and interfacing hardware incorporates sufficient redundancy to be single–fault tolerant.

The command and data handling subsystem design provides for single–fault tolerance with sufficient redundancy to ensure reliable operation throughout the mission. The Spacecraft controls computer (SCC), the command and telemetry interface unit (CTIU), the bus data units (BDUs), the science formatting equipment (SFE) and the solid–state recorder (SSR) are functionally redundant.

The communications subsystem design also provides for single–fault tolerance with sufficient redundancy to ensure reliable operation. The Ku–band equipment, the S–band equipment and the DAS equipment have a high level of redundancy. To increase the communications subsystem reliability, the DAS equipment can completely back–up the Ku–band equipment.

4 INSTRUMENT ACCOMMODATION

Accommodation of the EOS–AM instrument set utilized the following assumptions.

a. Instrument configurations are those agreed to during instrument interface meetings and baselined by the Martin Marietta Astro Space EOS–AM Program Management Office.

b. Instrument mass, power, and data rate budgets are per the allocations directed by 421–10–01, EOS Requirements Document; the ASTER UIID, 421–12–11–01; the CERES UIID, 421–12–12–02; the MISR UIID, 421–12–03–02; the MODIS UIID, 421–12–04–01; and the MOPITT UIID, 421–12–15–02.

c. CERES is accommodated as two instruments.

4.1 EOS–AM Instrument Set

The instruments of the EOS–AM set are shown in Figure 22 and include:

a. Advanced Spaceborne Thermal Emission and Reflection Radiometer (ASTER)

b. Clouds and the Earth's Radiant Energy Systems (CERES) (two units)

c. Multiangle Imaging SpectroRadiometer (MISR)

d. Moderate Resolution Imaging Spectroradiometer (MODIS)

e. Measurement of Pollution in the Troposphere (MOPITT)

4.2 Instrument Descriptions

ASTER is an imaging radiometer with 14 bands operating from visible to thermal infrared regions. It is comprised of three radiometers (VNIR, SWIR, and TIR) and two support modules (CSP and MPS). VNIR itself is composed of a radiometer (VSR) and electronics (VEL). ASTER provides data on surface mineralogy, soil properties, surface temperature, and geothermal activity.

CERES consists of two identical broadband scanning radiometers. One instrument operates in the cross–track mode for limb–to–limb spatial coverage, and the other operates with a rotating scan plane to provide angular sampling. Its bolometer detectors sense three spectral channels: total reflectance, shortwave, and longwave.

MISR is a pushbroom imager with nine charge–coupled device–based cameras looking forward, nadir, and aft along the Spacecraft ground path.

MODIS is a NASA facility imaging spectroradiometer. It scans a cross–track swath 2330 kilometers wide, and senses 36 spectral bands.

MOPITT is a scanning radiometer which senses upwelling infrared radiation in several CO and CH_4 bands. It provides atmospheric profiles which will be used to determine how the lower atmosphere interacts with surface, ocean, and biomass systems.

4.3 Instrument Configurations

The EOS–AM instrument set configurations and fields of view are shown in Figures 23 through 27.

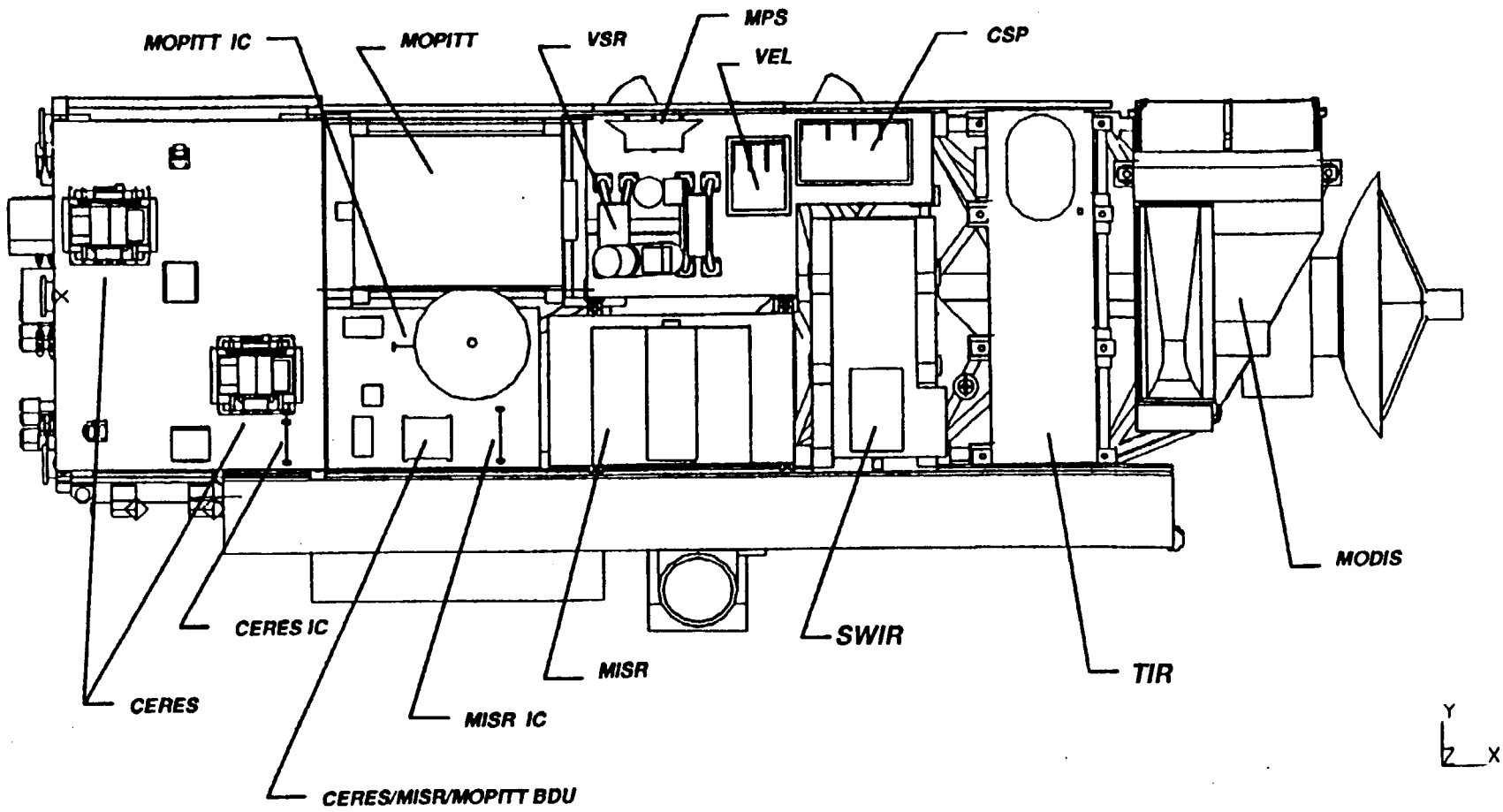

Figure 22. EOS–AM Instrument Set Layout

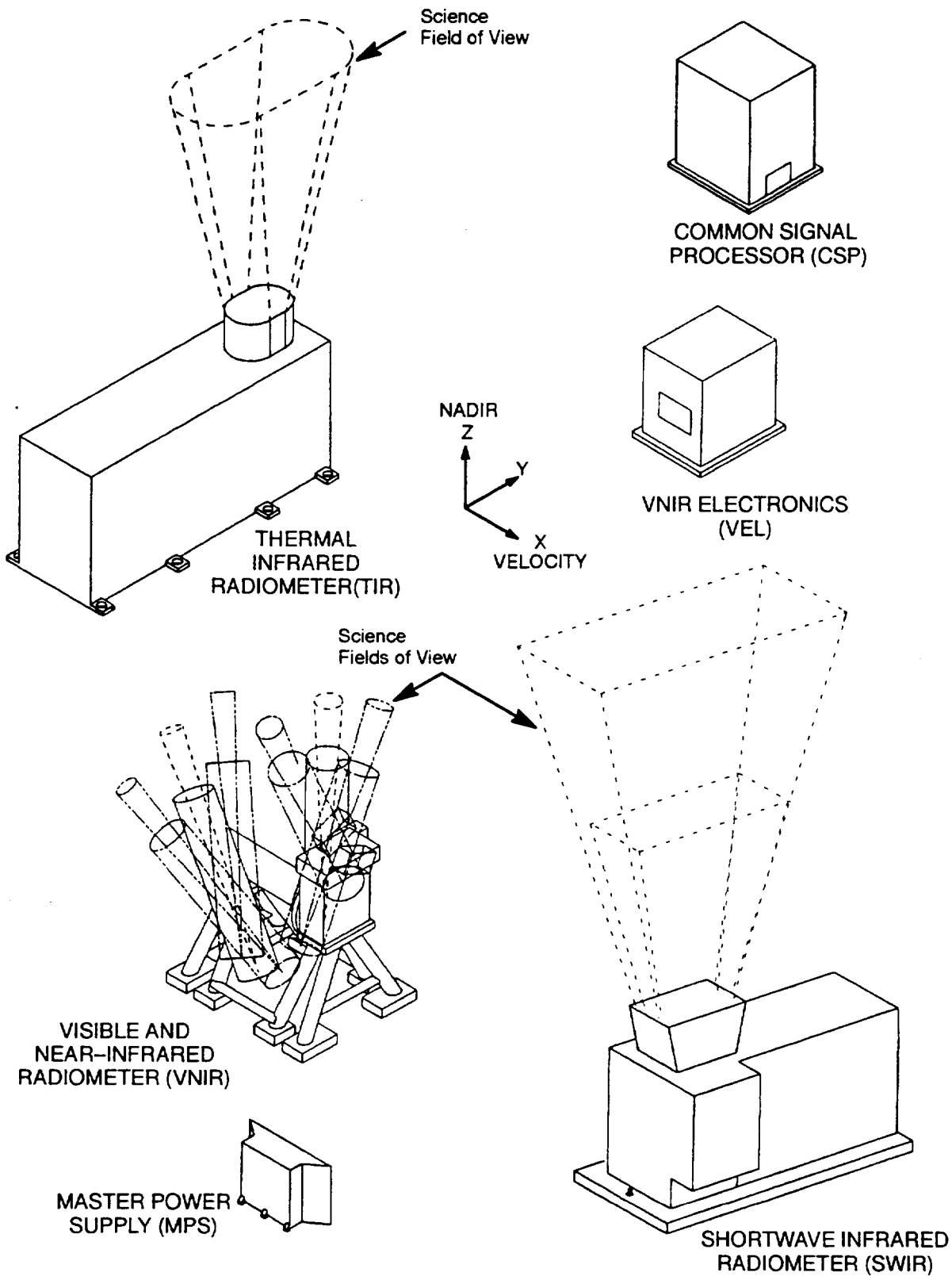

Figure 23. EOS–AM ASTER Configuration

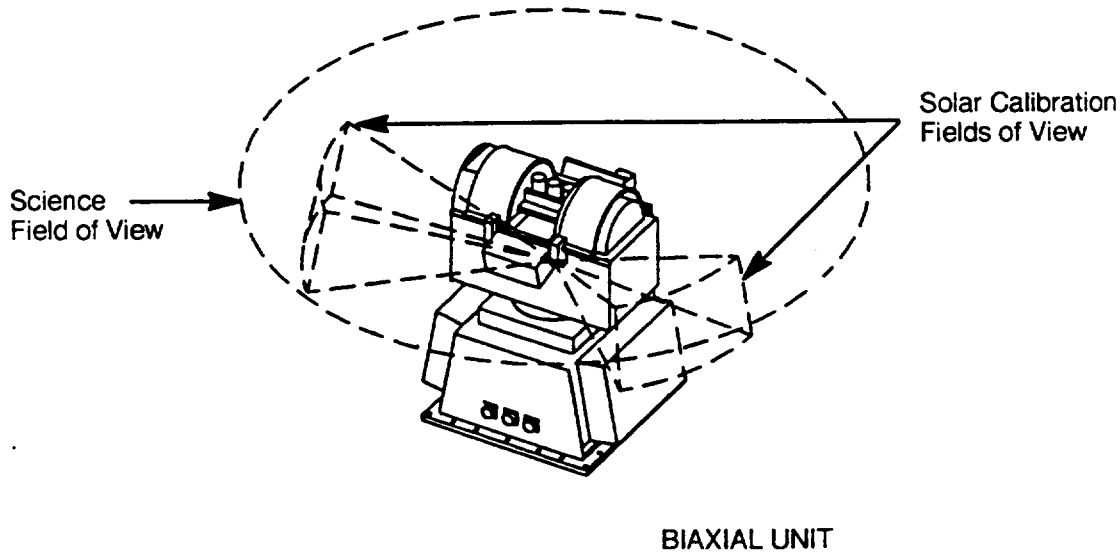

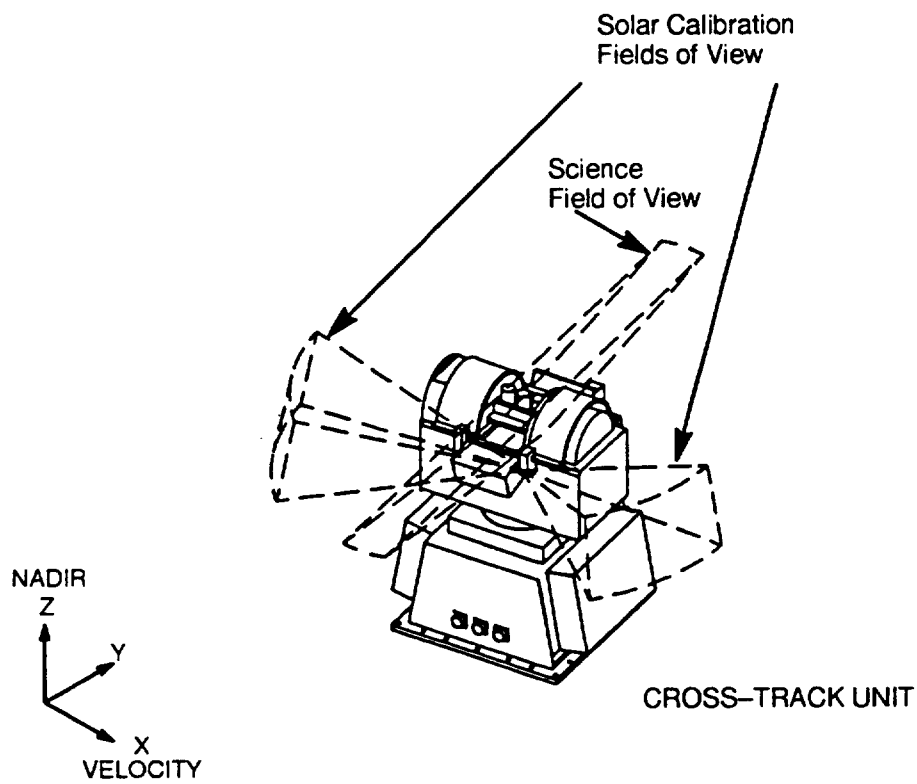

Figure 24. EOS-AM CERES Configuration

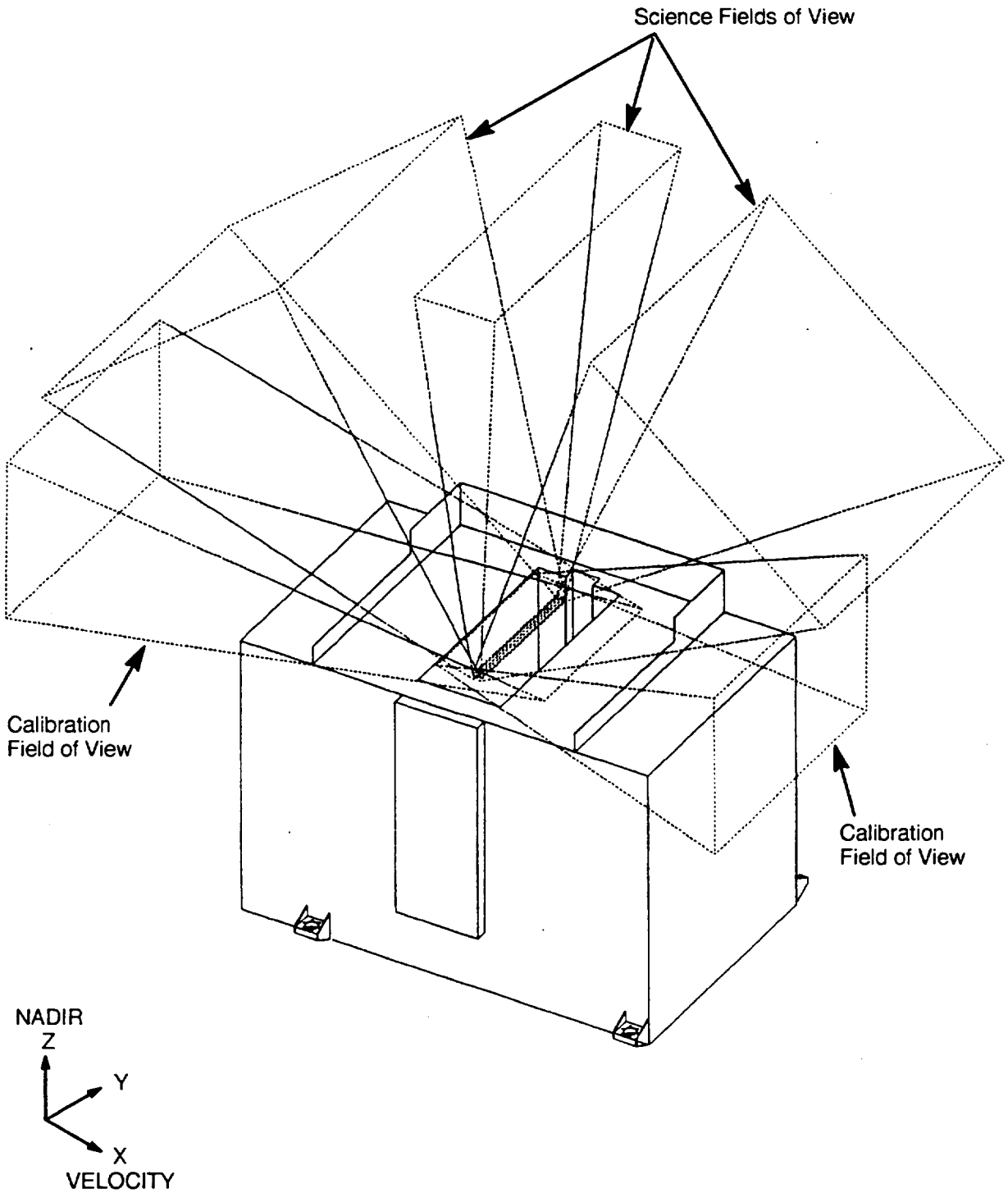

Figure 25. EOS–AM MISR Configuration

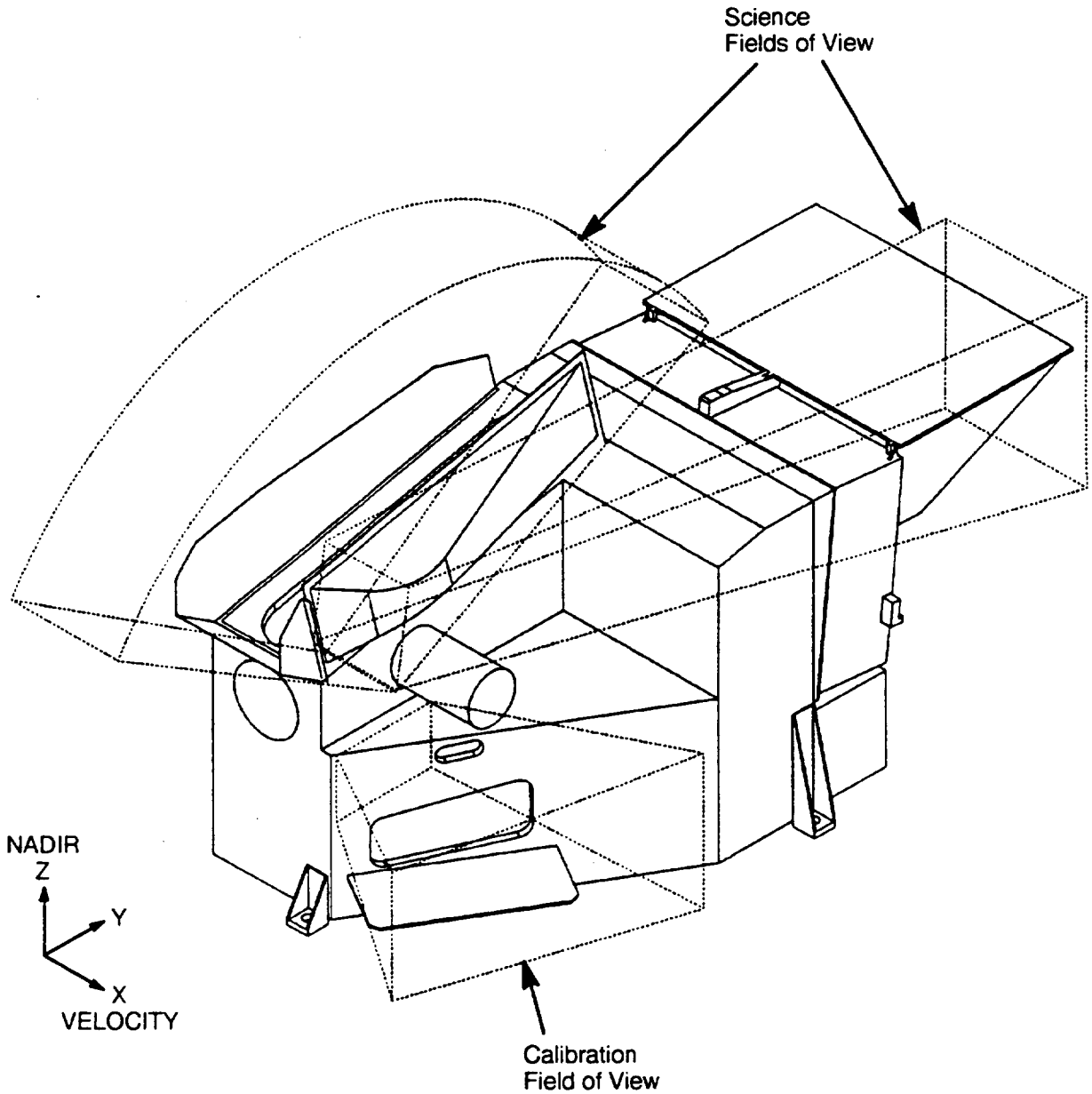

Figure 26. EOS-AM MODIS Configuration

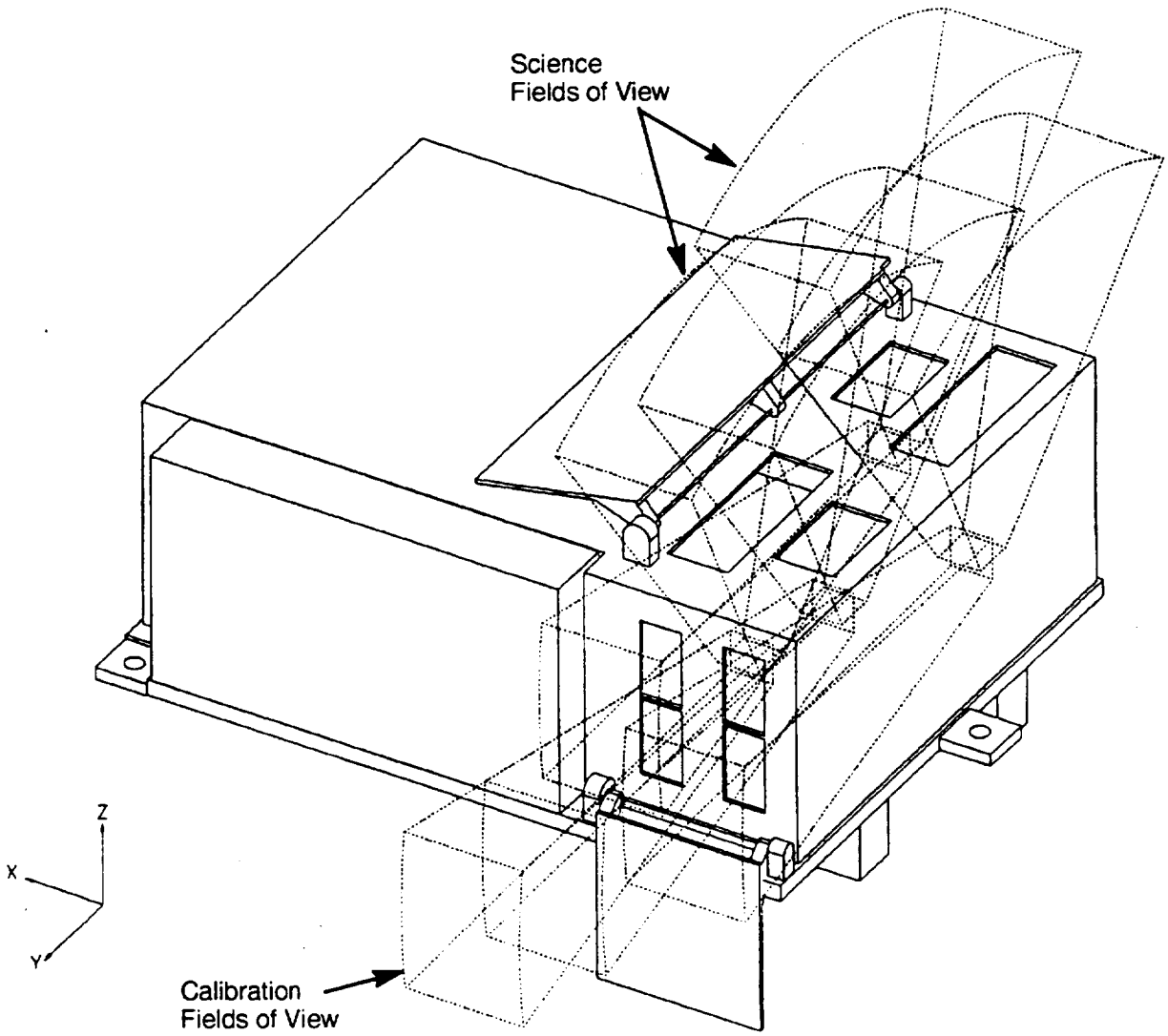

Figure 27. EOS–AM MOPITT Configuration

4.4 Resources Provided to the Instruments

The Spacecraft resources are budgeted among the instruments and housekeeping subsystems. The instrument mass, power, and data rate allocations are shown in Table III.

Table III. EOS–AM Instrument Resource Allocations

Instrument	Mass (lbs) Allocation	Power (W)		Data Rate (kbps)	
		One–Orbit Average	Peak	Average	Peak
ASTER	992.3	525	761	8,300	89,200
CERES (2)	198.5	95	185	20	20
MISR	297.7	80	135	4,000	6,500
MODIS	613.0	245	285	6,200	10,800
MOPITT	405.7	250	250	6	6
Total EOS–AM Instrument Set	**2507.2**	**1195**	**1616**	**18,526**	**106,526**

4.5 Instrument Pointing and Orbit Requirements

Instrument pointing and orbit position knowledge requirements are shown in Table IV. Instrument jitter and stability requirements are shown in Table V.

Table IV. EOS–AM Instrument Orbit Position Knowledge and Accuracy Requirements

Instrument	Orbit Position Knowledge Requirements (m, 3σ)			Pointing Knowledge Requirements at Boresight (Arc–Sec, 3σ)	Pointing Accuracy Requirements at Boresight (Arc–Sec, 3σ)
	Along Track	Across Track	Radial		
ASTER/SWIR	200	200	50	X 120 Y 120 Z 720	X 360 Y 360 Z 1080
ASTER/TIR	150	150	150	X 120 Y 120 Z 720	X 360 Y 360 Z 1800
ASTER/VNIR	100	150	200	X 120 Y 120 (Real time) Z 120	X 360 Y 360 Z 360
CERES	500	500	500	X 115 Y 115 (Post processed) Z 115	X 360 Y 360 Z 360
MISR	150	150	150	X 108 Y 108 (Real time) Z 108	X 240 Y 240 Z 240
MODIS	68	68	68	X 141 Y 141 (Post processed) Z 141	X 3600 Y 3600 Z 3600
MOPITT	2,000	2,000	**TBD**	X 500 Y 500 (Post processed) Z **TBD**	X **TBD** Y **TBD** Z **TBD**

Table V. EOS–AM Instrument Jitter and Stability Requirements (Peak–to–Peak)

Instrument	Requirement at Instrument Boresight (Arc–Sec, 3σ)			
	Time Scale	Roll (X)	Pitch (Y)	Yaw (Z)
ASTER/SWIR	4.4 msec 1.0 sec 1.8 sec	3.0 5.2 3.5	3.0 5.2 3.5	7.8 13.7 9.1
ASTER/TIR	69.7 μsec 15.8 msec 1.0 sec	9.0 10.5 15.8	9.0 10.5 15.8	23.4 27.3 40.9
ASTER/VNIR	2.2 msec 9 sec 480 sec	1.5 18.0 26.4	1.5 12.0 26.4	3.9 60.0 68.6
CERES	6 sec	79.0	79.0	79.0
MISR	1 sec 420 sec	7.0 16.0	7.0 16.0	7.0 16.0
MODIS	1 sec	1031.0	47.0	1031.0
MOPITT	10 sec	50.0	50.0	TBD

4.6 Instrument Accommodation Equipment

The instrument accommodation equipment provides mounting, power, thermal control, command and data handling resource interfaces to the instruments. Secondary structure, as needed, provides mounting support in addition to the primary Spacecraft structure. Fused power from the PDU is routed through an interface connector panel (ICP) to the instruments. For those instruments which do not have sufficient radiator area for thermal control, the Spacecraft will provide a coldplate attached to the CPHTS. The BDU provides command and data handling resources.

4.7 Instrument Mechanical Interface

Most instruments are mounted kinematically using a combination of mounts having 1–axis, 2–axis, and 3–axis freedom of rotation. Structural mounting panels are provided for smaller instruments as required. The required alignment between each instrument and the Spacecraft is provided by ensuring that the instrument's optical alignment cube is properly aligned with the Spacecraft navigation base reference.

4.8 Instrument Thermal Interface

All instrument components are thermally isolated from the Spacecraft. Most instruments will achieve thermal control via local radiators. The Spacecraft will provide a CPHTS to acquire, transport, and reject waste heat from those instruments which do not have sufficient radiator area and thermal fields of view. All instrument surfaces which are not attached to radiators or coldplates are blanketed with MLI to prevent radiative heat transfer. Thermal control during survival modes is achieved by internal heaters.

Table VI gives thermal dissipations for instrument components, along with their thermal control concept and CPHTS radiator area, where applicable.

Table VI. Instrument Thermal Accommodation

Instrument	Thermal Dissipation (W) (Allocated/Analyzed)	Primary Accommodation Concept
ASTER – TIR	189/141	CPHTS and Local Radiators
ASTER – SWIR	150/108	CPHTS
ASTER – CSP	76/46	Local Radiators
ASTER – VNIR–VSR ASTER – VNIR–VEL	46/1 44/28	Local Radiators Local Radiators
ASTER – MPS	44/34	Local Radiators
CERES (Biaxial unit)	50/39	Local Radiators
CERES (Cross–track unit)	45/30	Local Radiators
MISR	80/75	Local Radiators
MODIS	285/186	Local Radiators
MOPITT	250/200	CPHTS and Local Radiators

4.9 Instrument Electrical Interface

The instrument electrical interfaces are shown in Figure 28 and are described below.

Power: Electrical power is provided to the instruments at 120 volts direct current (Vdc). The instruments provide their own power On/Off switching (driven by BDU relay drive commands) and their own conversion from 120 Vdc to other voltages which are required internally.

Grounding: Instrument components which receive Spacecraft power are connected to a single–point fault ground which is connected to the Spacecraft Primary Power Reference.

4.10 Command and Data Handling Services Provided to the Instruments

The BDU provides redundant point–to–point command and telemetry interfaces to the instrument. There is a direct interface to the time and mark and frequency bus and to the MIL–STD–1553B command and telemetry bus for each instrument. Transfer of science data from low–rate instruments is via the MIL–STD–1553B low–rate science bus and from high–rate instruments via the high–rate links. These interfaces are illustrated in Figure 28. BDU resource allocations for each instrument are listed in Table VII.

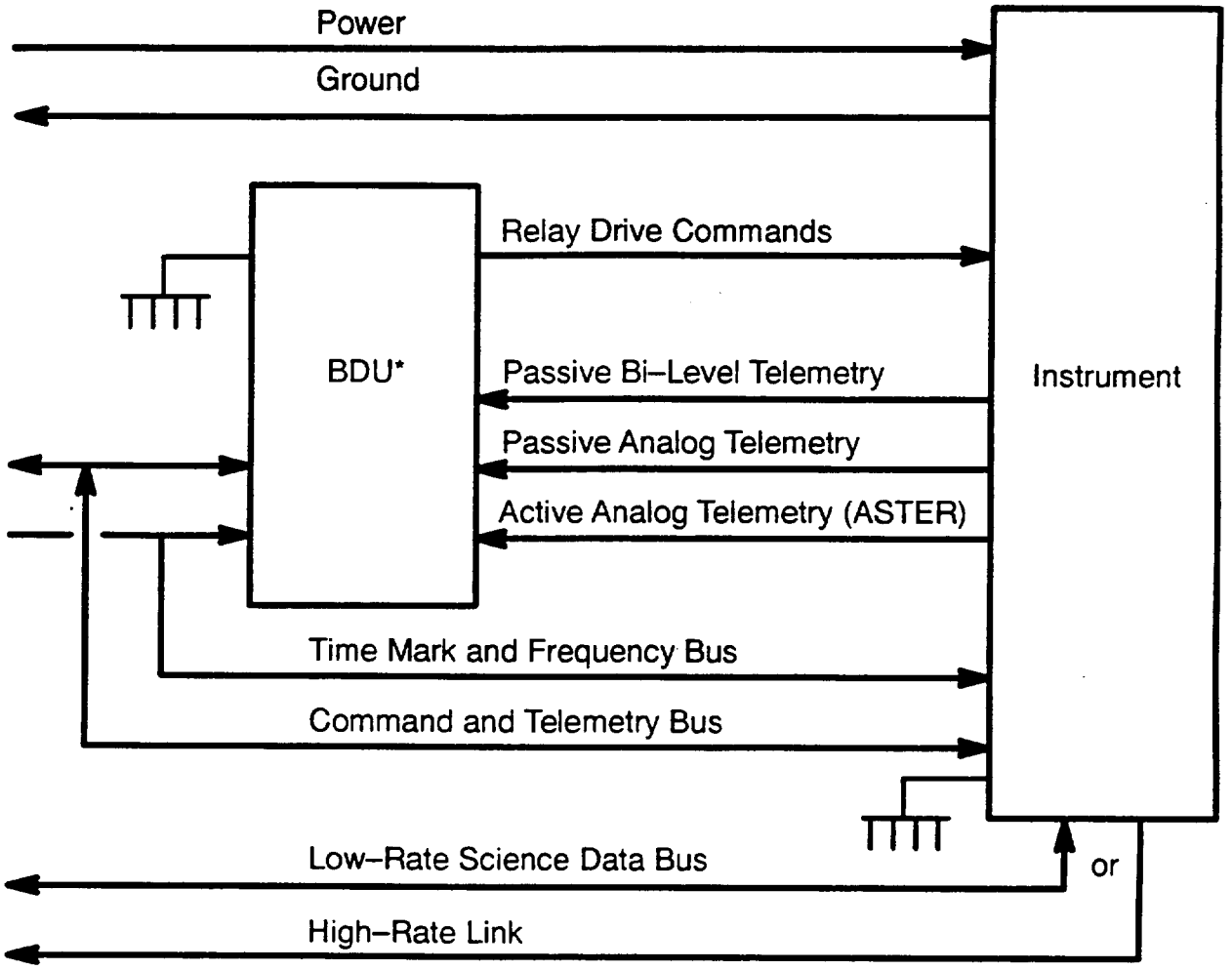

*BDUs may be shared among instruments.

Figure 28. Instrument Electrical and Data Interfaces

Table VII. Resource Allocations to Instruments

	Science Data		BDU Command and Telemetry Resources (Instrument)				
	High–Rate Data Links	Low–Rate Data Interfaces	Relay Drive Commands	Passive Bi–Level Telemetry	Passive Analog Telemetry	Active Analog Telemetry	Total Telemetry
ASTER	4	0	28	20	27	17	64
CERES	0	2	18	8	16	0	24
MISR	1	0	8	8	16	0	24
MODIS	1	0	15	16	9	0	25
MOPITT	0	1	20	16	21	0	37
Total	6	3	89	68	89	17	174

The C&DH services provided to the instruments include the following:

a. Distribution of real–time and stored commands through discrete interfaces for instrument reconfiguration and diagnostics

b. Distribution of real–time and stored commands and real–time memory loads through the 1553B interface for instrument operations

c. Sampling of instrument housekeeping telemetry at a rate of 512 bits per major cycle

d. Sampling of instrument health and safety telemetry at a rate of 16 bits per major cycle.

e. Generation and distribution of a 1.0 MHz reference frequency via the time mark and frequency bus with encoded time mark instant

f. Time code data message sent via the command and telemetry bus

g. Collection, processing, formatting, storage, and transmission of science data

h. Distribution of ancillary data once per major cycle (1.024 seconds), including:

    1. Time stamp
    2. Spacecraft position
    3. Spacecraft velocity
    4. Attitude angles
    5. Attitude rates
    6. Magnetic coil currents
    7. Solar array current
    8. Solar position
    9. Lunar position
    10. Time conversion

5 STRUCTURES AND MECHANISMS SUBSYSTEM (SMS)

5.1 Overall Function

The SMS provides the necessary structural support and mounting area for all instruments and Spacecraft bus equipment. The SMS is designed to satisfy multiple constraints including: launch environment, launch vehicle fairing static envelope, AM instrument set science and thermal fields–of–view (FOVs), and pointing stability. The SMS includes the release and deployment mechanism for the high–gain antenna. The SMS also provides the interface to the launch vehicle separation system.

The EOS–AM Spacecraft structure consists of the primary structure, EMs, equipment panels, instrument accommodation structures, and other secondary structures which support harnessing and components mounted to the primary structure.

5.2 Primary Structure and Propulsion Module Structure

The EOS Spacecraft primary structure is configured into two major substructures, as shown in Figure 29: a rectangular cross section forward truss (bays 2 through 6) and a hexagonal aft structure (bay 1). The forward truss consists of graphite/epoxy (GrEp) tubes bonded to titanium node fittings, with a panel structure for Bulkhead 7. The primary structure configuration features steps in bays 5 and 6 to provide fairing clearance for the MODIS and ASTER TIR instruments.

The aft structure (bay 1) is hexagonal in shape and supports the propulsion subsystem tank internally from the aft panel (Bulkhead 1) at six node fittings. Each node fitting will house an end of one of the six separation nuts used to separate the Spacecraft from the launch vehicle. In addition, the aft structure supports the battery panel, the DAS panel, the power equipment module, and the two CERES instruments mounted on a flat panel. The hexagonal shape was chosen to facilitate load transfer to the launch vehicle and to provide a larger cross section than the forward truss, so as to increase the bending stiffness and strength of the primary structure. Since the aft structure is removable following completion of the primary structure qualification testing (static and modal), parallel processing of the propulsion module and the Spacecraft bus can occur.

The forward truss and aft structure rely extensively on the successful construction methods implemented on the Upper Atmosphere Research Satellite (UARS) program. The tubular graphite/epoxy members are adhesively bonded to titanium node fittings in the case of longerons and titanium end fittings for the bulkhead and diagonal members. Precision fixtures and tight dimensional tolerances are incorporated in the buildup of the truss structure. This type of construction facilitates precise alignment of instruments and housekeeping equipment. Also the graphite/epoxy members exhibit low thermal distortion allowing the EOS Spacecraft to meet stringent on–orbit pointing requirements. The graphite material baselined for the tubes is an ultra–high modulus (UHMS) graphite which was successfully tested for the EOS Program in late 1989. The epoxy material has also been successfully tested and used on other NASA programs (ACTS, Mars Observer).

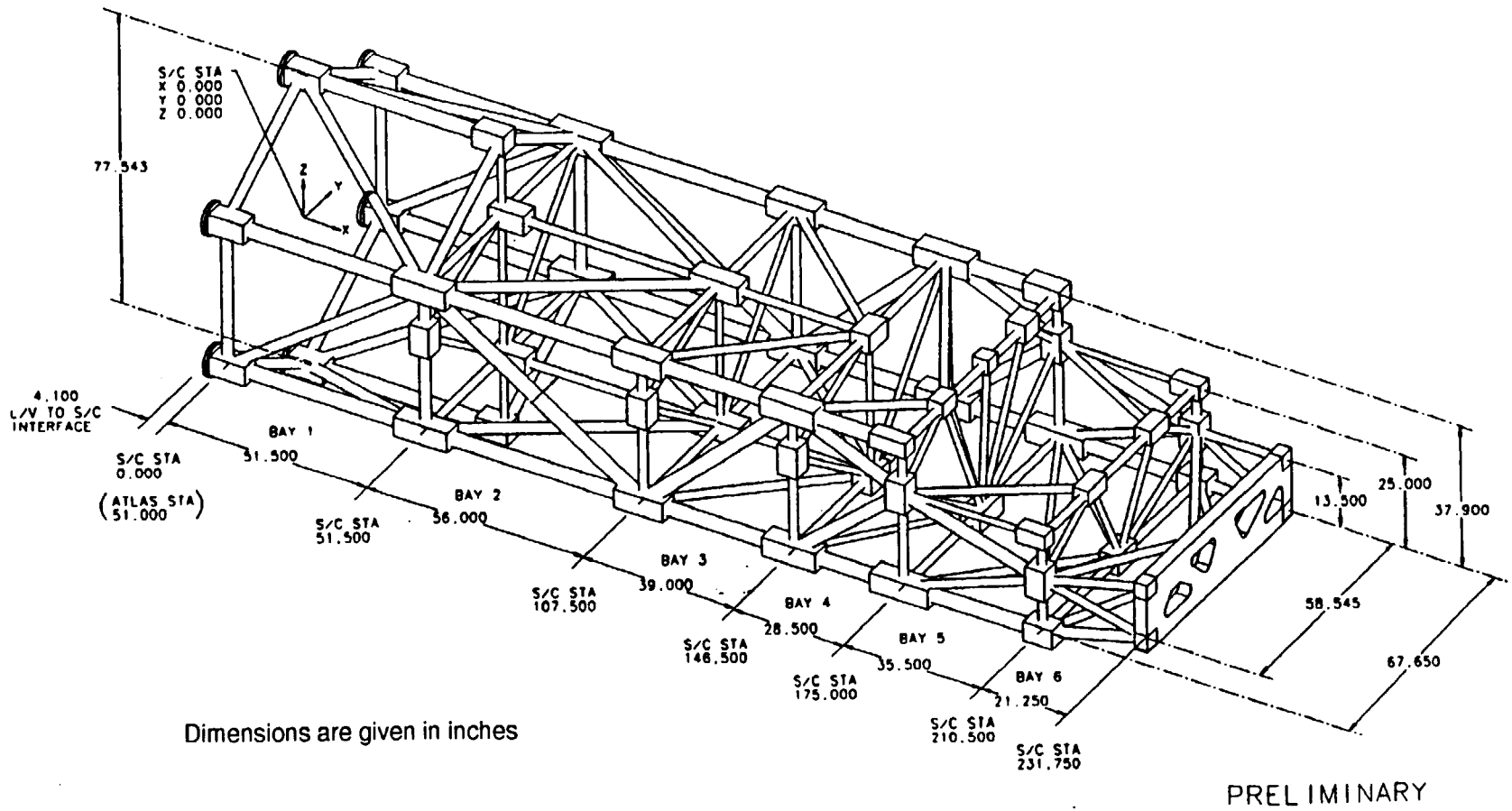

Figure 29. EOS–AM Primary Structure Design

The Propulsion Module structure consists of an aft panel with six co–cured titanium interface fittings that mount directly to the primary structure and a secondary truss of twelve UHMS struts which attach to each of the six interface fittings. These struts support the propellant tank via an interface adapter ring. The aft bulkhead is constructed of an aluminum honeycomb sandwiched by UHMS graphite/epoxy facesheets.

5.3 Equipment Module and Panel Structures

The EMs and panels provide mechanical support and protection from the on–orbit environment for most of the Spacecraft bus equipment. The EMs and panels are designed to be sufficiently modular to provide the capability to access equipment at the module level without major disassembly of the Spacecraft. This is achieved by providing, on at least one external EM face, removable panel(s) which are free of equipment. This approach provides flexibility in Spacecraft integration by allowing access to certain components within the EMs without removing the EM from the Spacecraft.

The Recorder EM, COMM/C&DH EM, Power EM, RWA EM, Battery panel, and DAS panel are constructed of panels consisting of aluminum facesheets and aluminum honeycomb core with embedded heat pipes in selected panels. The GN&C Sensor EM incorporates an optical bench for critical sensors in addition to an equipment mounting structure. The optical bench is constructed of aluminum honeycomb core with graphite/epoxy facesheets, and the equipment mounting structure is similar in construction to the other EMs. The construction of the EMs and panels follows the techniques employed for lightweight communication satellites. The modules are different sizes depending on the component sizing, fairing clearance, and radiator requirements. The modules and panels are kinematically mounted to the primary structure to prevent thermal distortion and to minimize load sharing. Aluminum edge members are used for panel–to–panel attachment. Potted and co–cured inserts are installed in the panels as required to mount the box components or secondary structure. Structural layouts for the EMs are depicted in Section 3 of this document.

5.4 Instrument Accommodation Structures

The instrument accommodation structures are customized for each instrument depending on the instrument's location, volume, mass, thermal control configuration, FOV constraints, pointing requirements, and fairing clearance. For the EOS–AM instrument set there are two categories: panel mounted and direct mounted. The panel mounted instruments are bolted to an aluminum honeycomb panel which has graphite/epoxy facesheets; the panel is then attached to the Spacecraft via kinematic mounts. The thickness of each panel and facesheet is derived based on the mass distribution and center–of–gravity offset of the respective instrument. The direct mount instrument accommodation structures incorporate tubular truss structures or customized mounts which attach to the primary structure node fittings.

5.5 Restraint/Deployment Mechanisms

The HGA restraint/deployment system is currently under evaluation for redesign. Alternatives to the baselined pyrotechnic separation nut system are being assessed in an effort to reduce the shock levels produced during deployment. Shock tests on several alternatives have been scheduled for May 1993 to characterize the relative system shock levels prior to recommending a new baseline.

The HGA deployment system incorporates a graphite/epoxy boom with a spring–driven hinge to achieve the proper extension from the Spacecraft. A damper allows for a controlled deployment away from the Spacecraft, and a redundant spring ensures reliability. The stowed and deployed HGA configurations are illustrated in Figure 30.

The means for restraining the solar array assembly (SAA) will be provided by the solar array subcontractor, however, it will likely incorporate pyrotechnic separation nuts to achieve restraint and controlled release. The pyrotechnic devices will employ redundant charges and electronics.

The solar array is deployed using an Astro mast cannister design. The flexible blanket array is deployed by first initiating the blanket box separation system. Once the blanket box is released, the array is rotated to the X–Y plane via the spring driven elevation hinge. Following rotation of the array, the blanket box latches are released allowing separation of both halves of the blanket box. Finally, the Astro mast motor is activated, which deploys the mast, unfolding the flexible blanket to its final position. The stowed and deployed configurations of the solar array are also illustrated in Figure 30.

5.6 Solar Array Drive (SAD)

The SAD, mounted to the zenith side of the primary structure, is a precision incremental stepping device capable of rotating the array in a forward or reverse direction at various speeds. A reduction gear set provides sufficient torque to overcome the worst case solar array inertial torques reacted to the SAD and the frictional drag of the fiber brush slip ring assembly and bearings. The motor has two sets of windings for redundancy. The slip ring assembly is used to transfer the electric power and data signals across the rotating interface to the Spacecraft.

5.7 Kinematic Mounts (KMs)

The KMs provide the structural interface between the primary structure and the instruments, equipment modules, and equipment panels. Their function is to minimize thermal distortion and load sharing between the primary structure and equipment mounted to it. The KMs perform this function by relieving loads in certain directions while providing stiffness in others. There are three types of KMs: 1–axis, 2–axis, and 3–axis. The number of axes refers to the number of directions in which stiffness is provided. The load relieving element in the KMs is a series of stainless steel spherical ball bearings which rotate in response to forces in certain directions only. The bearings are lined with teflon to minimize the likelihood of galling. The KMs are constructed of titanium to achieve high strength and stiffness, and low thermal conductivity.

The CPHTS radiators are supported with a simplified kinematic mount called a Differential Shear Transfer (DST) mount. The load relieving element in these devices is a low friction polyimide washer which slides directly on the primary structure node fitting surface. This design is used only in low–load, non–alignment–critical applications.

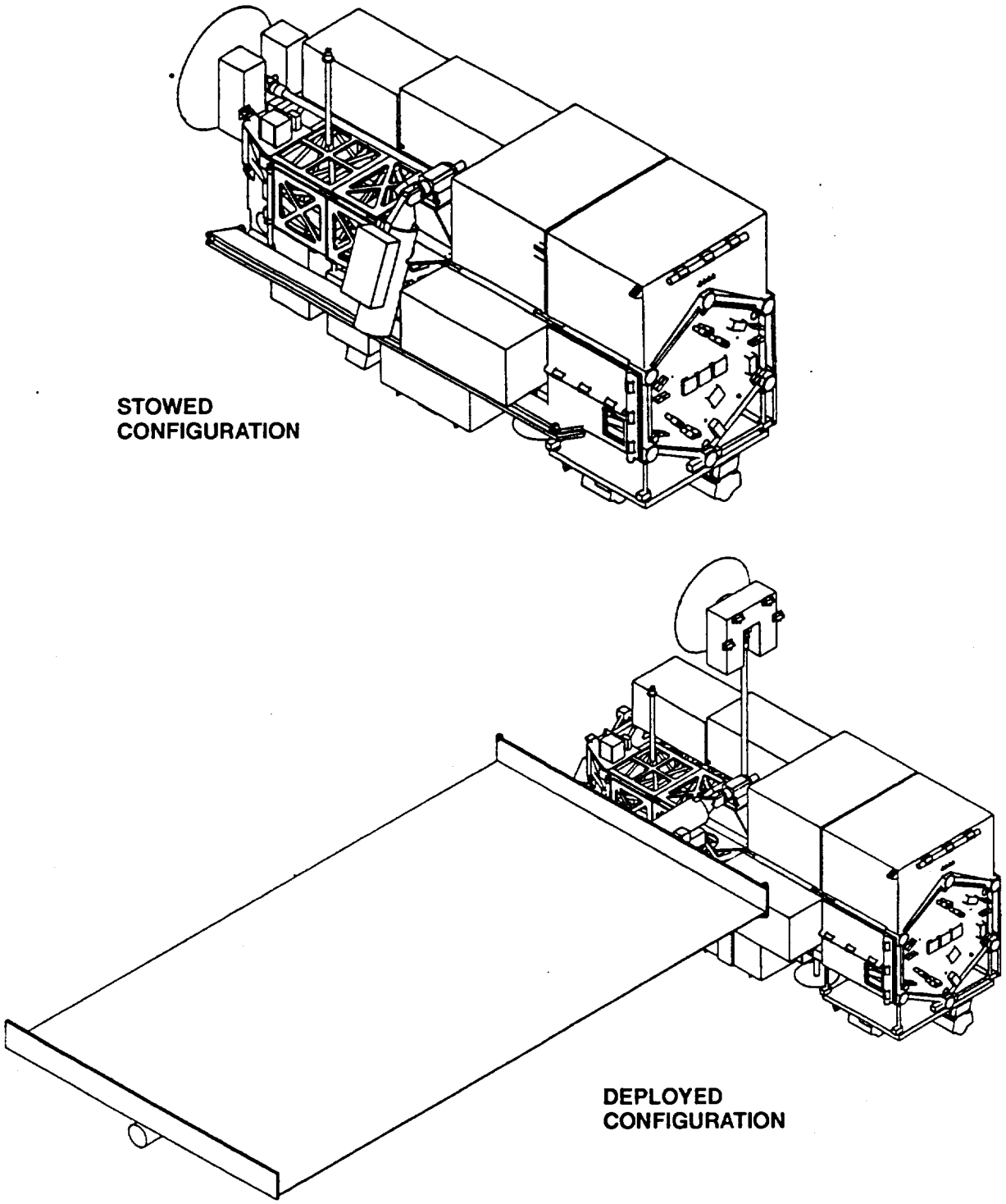

Figure 30. SAA/HGA Stowed and Deployed Configurations

5.8 Launch Vehicle Separation System

The Launch vehicle separation system is comprised of six discrete separation nut systems. The head of each separation bolt is housed in a bay 1 node fitting. The launch vehicle side of the interface houses the nut end and attaches to fittings which form part of the launch vehicle adapter. This system was chosen to allow a simpler interface to the launch vehicle and was more weight efficient than a continuous ring interface. Separation velocity is achieved by employing a set of separation springs that push off the launch vehicle adapter. The springs are designed such that a failure of one will not prevent achieving the necessary velocity required for proper separation.

6 THERMAL CONTROL SUBSYSTEM (TCS)

6.1 Thermal Control Subsystem Overview

The EOS–AM TCS is required to maintain all Spacecraft components and Instrument interfaces within allowable thermal limits throughout all operating and non–operating conditions.

The thermal design philosophy maximizes the use of passive thermal control techniques such as selective conductive couplings, e.g., low conductance standoffs for isolating equipment, and conductive gaskets for equipment requiring good conductive couplings. Selective thermal finishes are also employed for various components/structures, e.g., low emissivity (ε) tape or multilayer insulation (MLI) for radiative isolation, and high emissivity/low absorptivity (α) surfaces (optical solar reflectors) for radiators. For components/equipment with more stringent requirements, active thermal control methods are employed. A Spacecraft–provided capillary pumped heat transport system (CPHTS) provides thermal control of the Instrument interfaces which cannot reject their heat locally from the instrument. Constant conductance heat pipe radiator panels are used to equalize temperature gradients in selected EMs as well as on the CPHTS radiators. Where required, autonomously controlled heaters ensure that minimum temperature requirements are maintained. Heater control electronics and thermostats are used for heater control. Key features of the EOS–AM TCS are shown in Figure 31.

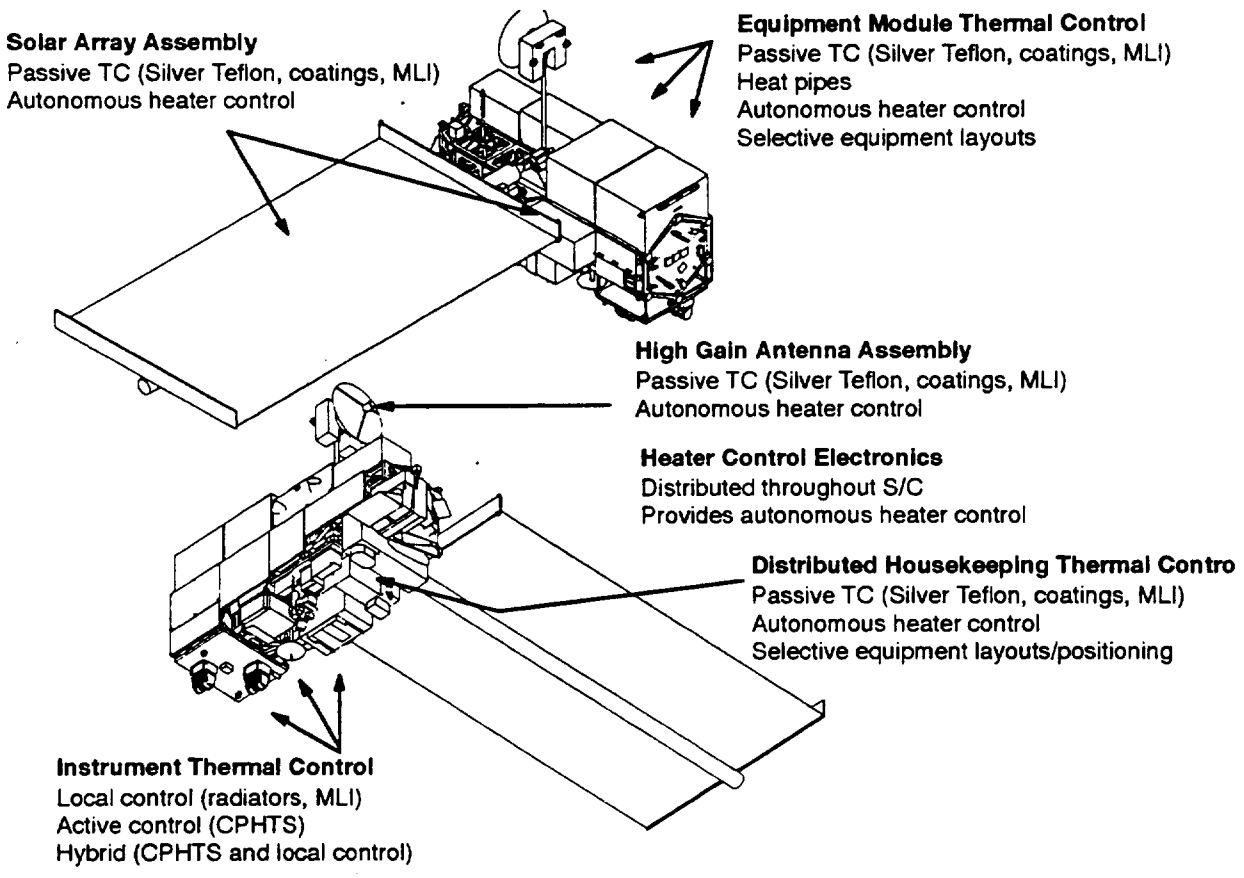

Figure 31. TCS Key Features

A functional diagram of the various thermal control methods is shown in Figure 32.

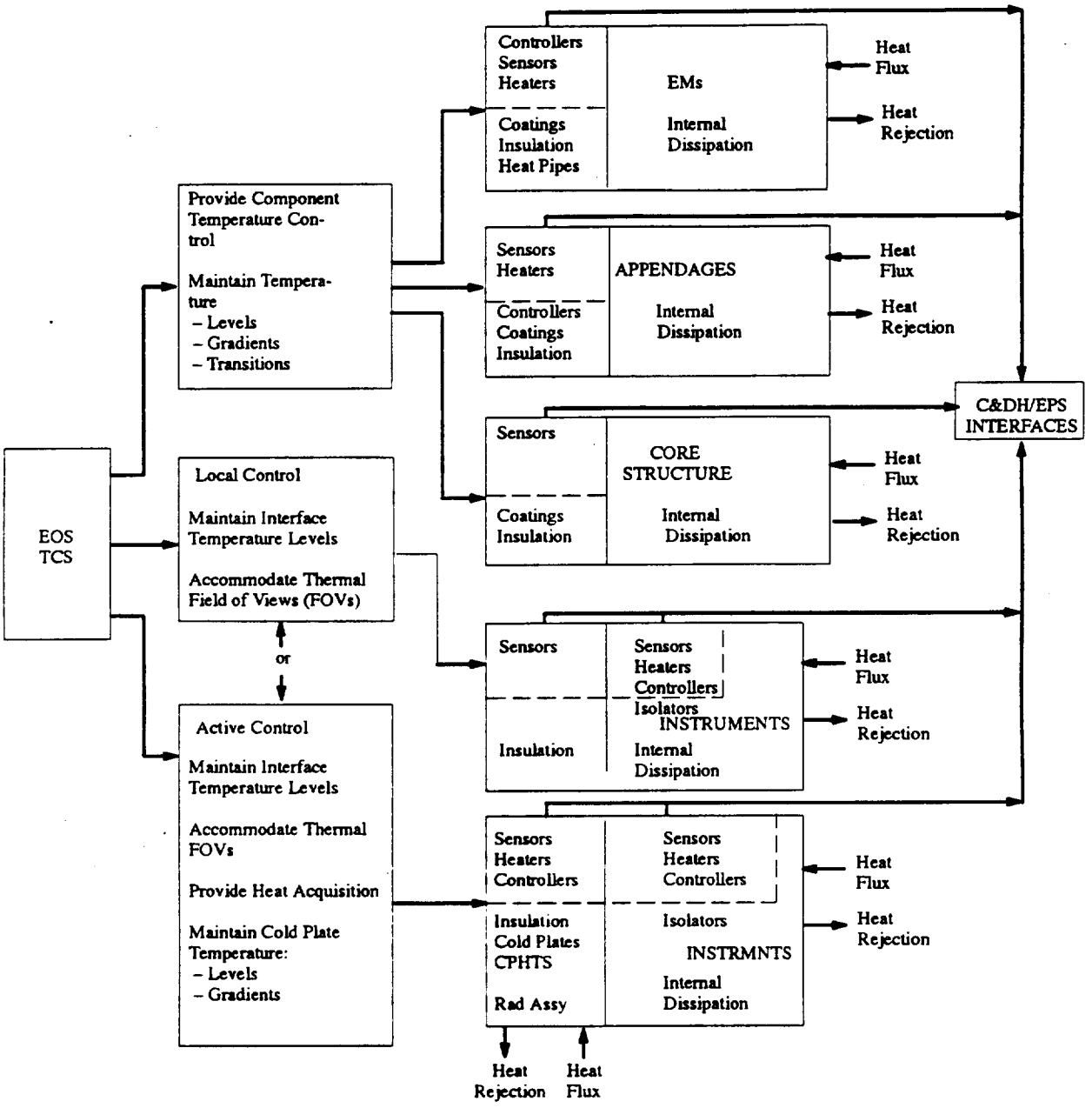

Figure 32. Thermal Control Subsystem Functional Block Diagram

6.2 Thermal Design Parameters/Requirements

The assumed key orbital and environmental parameters and the available material properties are contained in Table VIII. A combination of worst-case operational and non-operational conditions, beginning and end of mission material properties and applied margins are used to determine thermal control hardware needs, e.g., required radiator areas, number/size/configuration of heat pipes, heater power requirements, etc.

Table VIII. Thermal Control Subsystem: Assumed Parameters

Operating Mode	Orbit Altitude	Beta Angle (degrees)	Solar Flux (w/sq in)	Albedo	Earth IR(w/sq in)
Science	705 km	13.5	0.911	0.329	0.157
(EOL)		18	0.910	0.336	0.155
		30.8	0.860	0.336	0.155
Science	705 km	15	0.871	0.315	0.148
(BOL)		24.5	0.869	0.311	0.150
		30	0.901	0.315	0.148
Survival	705 km	15	0.871	0.315	0.148
(BOL)		24.5	0.869	0.311	0.150
		30	0.901	0.315	0.148
Orb Acq.	550x700 km	15	0.871	0.315	0.148
(BOL)		24.5	0.869	0.311	0.150
		30	0.901	0.315	0.148
Science	705 km	30.8	0.860	0.336	0.155
(EOL, SPSM, two S/C orientations)		30.8	0.860	0.336	0.155
Safe	705 km	15	0.871	0.315	0.148
(BOL, SPSM, two S/C orientations)		15	0.871	0.315	0.148
Orb Acq.	550x700 km	15	0.871	0.315	0.148
(BOL, SPSM)		24.5	0.869	0.311	0.150

Key Material Properties:

Radiators (Silver Teflon) α	0.10 (Cold), 0.25 (Hot)
Radiator (Silver Teflon) ε	0.79
MLI Effective Emissivity ε	0.025

Note: EOL = End-of-Life; BOL = Beginning-of-Life; SPSM = Sun-Pointing Safe Mode

As defined in the General Instrument Interface Specification, the instrument interface temperature (Spacecraft side) must be maintained between 0° to 30°C for locally controlled instruments and 20° to 25°C for CPHTS controlled interfaces. Operating and non–operating housekeeping equipment temperature limits are defined by the General Interface Specification, EM performance specifications, and the component performance specifications: critical components with tight temperature requirements include battery cells (–5° to +10°C operating), as well as several GN&C components (the IRU, Star Trackers and Earth sensors), some of which also require stringent temperature stability. As a general rule, Spacecraft components will be qualification tested to temperatures at least 10°C beyond the maximum and minimum predictions, and acceptance tested to temperatures at least 5°C beyond the maximum and minimum predictions.

6.3 Instrument Thermal Design Description

The Spacecraft TCS allows for two instrument thermal control strategies:

a. Instrument local thermal control

b. Spacecraft–provided thermal control using a CPHTS

6.3.1 Local TCS Strategy

Local instrument thermal control is normally accomplished passively by incorporating instrument radiators and selective thermal control coatings, e.g., high ε/low α for radiators, on instrument components. Specific designs must be based on the field of view (FOV) available for radiative heat rejection.

6.3.2 Spacecraft Provided Instrument Thermal Control

There are three Instruments (or parts of Instruments) which require active cooling, i.e., ASTER–TIR, ASTER–SWIR and MOPITT. Active cooling is achieved via the use of a CPHTS.

The CPHTS, shown in Figure 33, is a fully redundant two–phase fluid, capillary–pumped thermal system which uses anhydrous ammonia as its working fluid. A coldplate/evaporator in contact with the instrument acquires waste heat and transfers it to liquid ammonia which is thereby vaporized. The vapor flows to a radiator assembly on the cold side of the Spacecraft. There the vapor is condensed to a subcooled liquid as the heat is radiated to space. This is accomplished via a heat exchanger which transfers heat to a constant conductance heat pipe (CCHP) network on the radiator. The condensed liquid from the heat exchanger exit is further subcooled on the radiator before being returned to the coldplates. Capillary action in the coldplate wicks provides the system pumping force and loop temperature is maintained via temperature control of the Reservoir. Non–condensible gas traps and heaters provide necessary control/regulation functions.

Radiator assemblies, as shown in Figure 33, are body–mounted on the cold (+Y) side of the Spacecraft for a favorable view to cold space. The radiator sizing accounts for the effects of peak instrument load by assuming load smoothing due to instrument/CPHTS thermal mass effects.

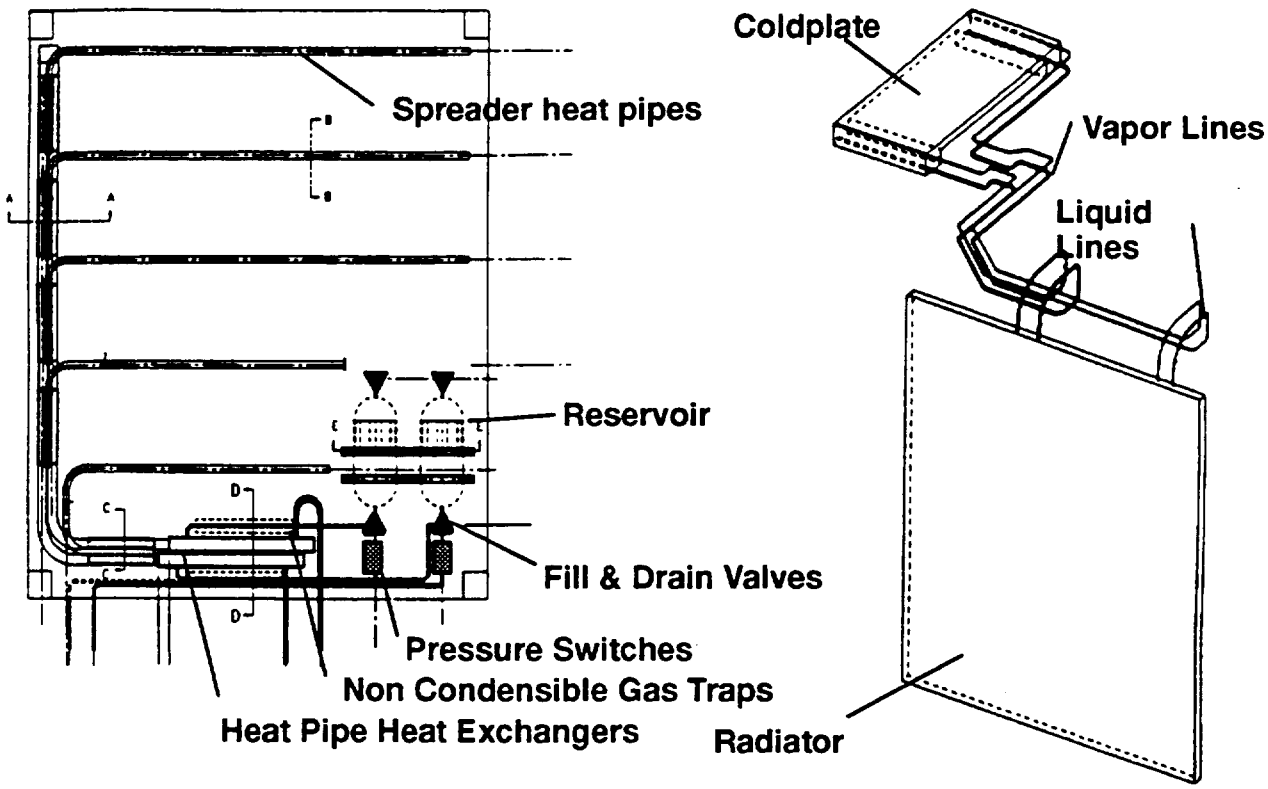

Figure 33. CPHTS Equipment Layout (Typical)

6.3.3 Instrument Thermal Interfaces

The Instruments are generally thermally isolated from the Spacecraft (with the exception of the CPHTS controlled Instruments). This is achieved via low conductance mounts: Kinematic mounts for ASTER, MOPITT, MISR, and MODIS, and low conductance stand offs for CERES. MLI between the Instruments and the Spacecraft minimizes radiative heat transfer.

6.4 Housekeeping Equipment Thermal Control

The Spacecraft housekeeping equipment falls into two categories, i.e., equipment packaged in the EMs and equipment distributed throughout the Spacecraft. A list of component temperature limits and dissipations is contained in Table IX.

6.4.1 EM Equipment Thermal Control

The main thermal control features of the externally mounted equipment modules/panels are schematically depicted in Figure 34. For most of the EMs, the +Y and –Z facing surfaces are used as the main radiators. MLI is used to "trim" areas not required for heat rejection. Autonomously controlled heaters mounted on selected EM components ensure that minimum allowable temperatures are not exceeded.

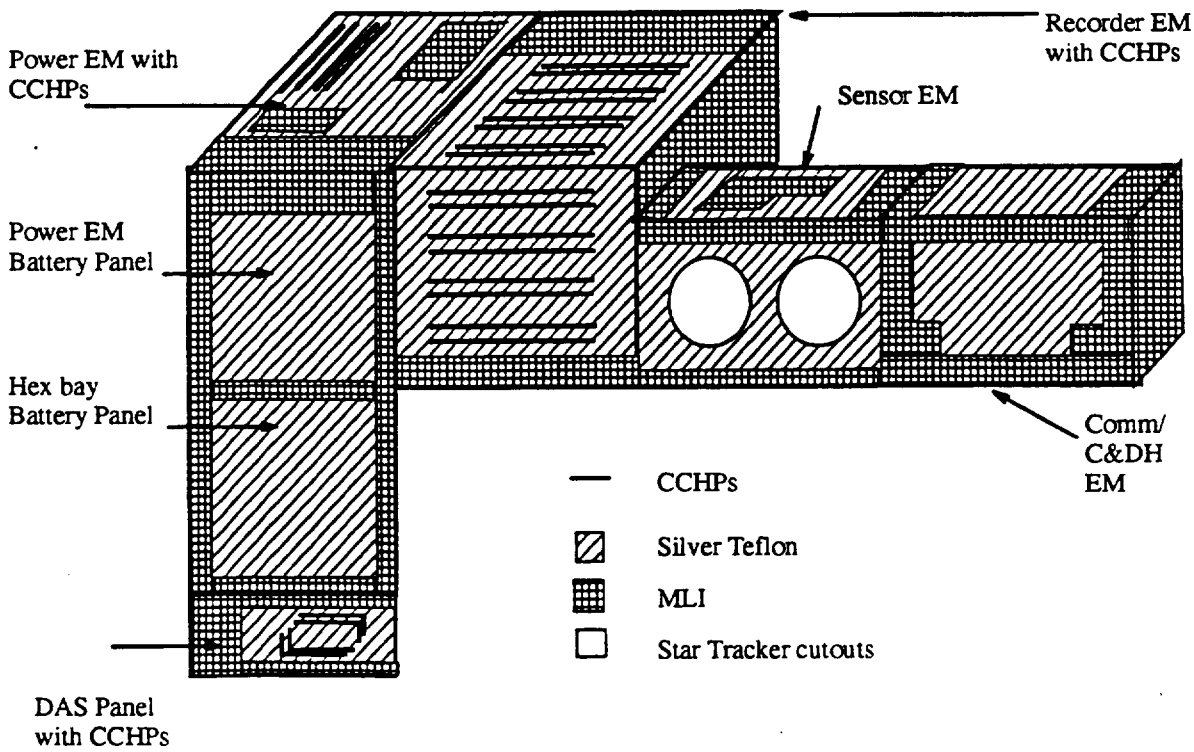

Figure 34. Equipment Modules Thermal Control Features

The current baseline shows that heat pipes will be required for the DAS Panel, Power EM and Recorder EM. The basic function of the heat pipes is to reduce panel gradients by efficiently spreading the component waste heat dissipation. The constant conductance heat pipes used in the EM design are standard axially–grooved aluminum with anhydrous ammonia as the working fluid.

The DAS equipment panel is located in the aft end of the Spacecraft. CCHPs are used in the +Y radiator panel spreading the relatively high heat fluxes from the DAS Transmitters.

The power EM is composed of a module containing power management components (–Z mounted) and one of the two Battery panels. Due to the variable and relatively high heat fluxes on the BPCs, heat pipes are required on the –Z panel. The other battery panel is mounted to the core structure hex bay.

Table IX. Equipment Module Dissipations, Heat–Rejection Capability, and Radiator Temperatures

Description	Location	Quantity	Allowable Temps (C) min	max	Comp Dissipation [2] (W)	Comments
ASTER	S/C nadir	1	Note 1		525 [3]	TIR,SWIR,CSP,MPS,VEL,VSR
CERES	S/C nadir	2	Note 1		95 [3]	Fore & Aft
MISR	S/C nadir	1	Note 1		80 [3]	
MODIS	S/C nadir	1	Note 1		245 [3]	
MOPITT	S/C nadir	1	Note 1		250 [3]	
Instr mounting i/f	S/C core	6	0	30	0	
Instr CPHTS i/f	S/C core	3	20	25	0	
Core structure	S/C core	1	–30	50	0	
Solar Array Drive	S/C zenith	1	–24	61	9	
HGA	S/C zenith	1	Note 1		156 [3]	
RWA	RWA EM	4	–10	50	15	
MTRs	Power EM/PM	3	–10	50	5	
Earth Sensors	S/C nadir	2	–10	35	21	Head temp limits
CSS	SAA, Sensor EM	5	–95	90	0	
FSS	Power EM	1	–10	50	3	FSS head limits
Star Tracker	Sensor EM	2	–10	40	24	
Magnetometer	Sensor EM	2	–10	50	1	Electronics and Sensor
IRU	Sensor EM	1	10	40	26	
Attitude Control Elec	Sensor EM	1	–10	50	46	
Battery	Power EM/hex bay	2	–5	10	132	54 NiH cells per battery
BPC	Power EM	2	–10	50	158	
PDU	Power EM	1	–10	50	43	
SAA	S/C –Y side	1	–95	100	0	Gallium Arsenide cells
SSU	Solar Array	1	–15	55	70	
FDB	var	13	–10	50	12	
PSU	Sensor EM	1	–10	50	16	
ADE	Comm/C&DH EM	1	–10	50	6	
SCC	Comm/C&DH EM	2	–10	50	24	
CTIU	Comm/C&DH EM	2	–10	50	44	
Data Control Unit	Recorder EM	2	–10	50	45	Solid state recorder
Data Memory Unit	Recorder EM	2	–10	50	50	Solid state recorder
Bus Data Unit	Various	10	–10	50	81	
SFE	Recorder EM	1	–10	50	75	
SBIU	Comm/C&DH EM	1	–10	50	1	
S–Band Xponder	Comm/C&DH EM	2	–10	50	22	duty cycle
KSA Modulator	Recorder EM	2	–10	50	17	
Master Oscillator	Comm/C&DH EM	2	–10	50	8	
DAS RF Amplifier	DAS Panel	2	–10	50	39	
DAS Upconverter	DAS Panel	2	–10	50	1	
DAS Modulator	Recorder EM	2	–10	50	49	
PMEA	Propulsion Module	2	–10	50	38	
EPC	var	4	–20	60	16	
PM Equipment	Propulsion Module	var	12	50	0	Tanks,Lines,thrusters, etc.

Note 1 Contains several different components with various temperature limits
Note 2 Total Estimated Orbit average (maximum) component dissipation
Note 3 Instrument/component maximum power allocations

The batteries are mounted on two aluminum honeycomb panels at the aft end of the Spacecraft. Individual battery cells are mounted within aluminum sleeves, which are grouped into sets of three and attached to individual baseplates. These are then attached to the +Y radiator panel. The Battery panels are radiatively decoupled from the Spacecraft core and power EM by MLI. Autonomously controlled heaters mounted to each cell ensure that the tight temperature (–5 to +10°C operating) and gradient (cell–cell ΔT <3°C) requirements are maintained.

The Recorder module contains the solid state recorder equipment. Two separate set of heat pipes are required for heat spreading on the +Y panel (DCUs/DAS modulators), and the –Z panel (DMUs/KSA modulators).

The COMM/C&DH EM allows the use of both zenith and +Y radiators for equipment heat rejection. This module does not require heat pipes.

The GN&C (sensor) EM locates electronic equipment on the zenith panel and nadir panel (navigation base). The Star Trackers and IRU are located on the navigation base with the trackers viewing out the +Y radiator through baffled apertures.

The four reaction wheel assemblies (RWAs) are mounted in one EM located on the Spacecraft sun–facing side (–Y). RWA waste heat is rejected via nadir (+Z), –Y as well as –X radiators.

6.4.2 Distributed Housekeeping Equipment Thermal Control

The externally mounted equipment such as the solar array, solar array drive, sun sensors, sequential shunt unit, earth sensors, antennas, instrument BDUs, etc., will use passive thermal control techniques augmented by heaters where necessary, to maintain allowable component and/or component interface temperatures.

The Spacecraft core, including the primary structure, will use selective thermal coatings to minimize temperature gradients and ensure allowable instrument interface temperatures (0° to 30°C). Most of the EM internally facing panels are painted black to enhance internal radiative heat transfer, and thus internal gradients. Certain low dissipation equipment, e.g., data harnesses and connectors, mounted within the Spacecraft core will be passively thermal controlled.

The propulsion module (PM) which is mounted within the core structure at the aft end of the Spacecraft is radiatively and conductively isolated from the rest of the Spacecraft equipment. Selected thermal coatings augmented by autonomously controlled heaters will ensure that equipment in contact with propellant is maintained at least 10°C above the propellant freezing temperature. Dissipating components will be mounted on the –X panel. Externally mounted components will utilize –X–facing radiator surfaces. Autonomously controlled heaters will maintain minimum allowable temperatures. The thruster valve heaters will be controlled via 28 V heater control electronics. The other PM equipment (tanks, lines, –X components) will use thermostatically controlled heaters.

6.5 Heater Control Electronics (HCE)

The EOS–AM Spacecraft uses a distributed HCE network, i.e., HCEs are located at or near the heater(s) which they control. There are four types of HCE being used on EOS–AM:

- General application thermostatic controllers for operational, startup and survival heaters
- Proportional, commandable set point controllers for CPHTS reservoir control
- Proportional (28 V) Propulsion Module (PM) controllers
- Proportional controllers with fixed set points for Battery assembly control

Control is achieved via dedicated solid–state driver circuitry implemented with FET devices. The HCE provides direct application of 120 VDC (28 VDC for PM) to heaters and "soft" turn–on and turn–off to eliminate EMI concerns. All HCEs are fully redundant against single point failure.

(This page intentionally left blank.)

7 ELECTRICAL POWER SUBSYSTEM (EPS)

7.1 EPS Overview

The EPS provides all Spacecraft instruments and subsystem housekeeping equipment with +120 Vdc ±4% power (at the user) during all mission phases. The EPS is modular to facilitate integration and ground test, and is designed to provide single–fault tolerance and a high level of redundancy. A simplified EPS power distribution diagram is shown in Figure 35.

The EPS provides the functions of energy generation, energy storage, power conversion, regulation, and distribution. The EPS utilizes a fully–regulated direct–energy–transfer (DET) configuration at +120 Vdc, which transfers power directly from the source to the loads with a minimum of losses and without any intermediate power conversion. This results in a system which is both light–weight and efficient, while providing ±4% regulation (at the user) for all loads. The EPS is required to provide 5.0 kW end–of–life (EOL) average, of which 2.53 kW is allocated to operate all electrical loads, and 2.47 kW is available to recharge the batteries while sunlit.

Power is generated by a single–wing photovoltaic solar–cell array which rotates via a solar array drive (SAD) in order to maximize solar exposure. Power for Spacecraft operation during eclipse is stored in two rechargeable 50 ampere–hour NiH_2 batteries. During the eclipse phase, (32.7 to 34.8 minutes), the batteries provide power to operate the Spacecraft loads via the battery power conditioners (BPCs), which combine discharge regulator and charge regulator functions in the same converter. During the sunlit portion of the orbit, (66.2 to 64.1 minutes), the BPCs charge the batteries, transforming energy from the +120 volt bus voltage level to the current required by the batteries. Excess solar array power is shunted via a sequential shunt unit (SSU).

The Spacecraft main power bus uses a star–radial power distribution at +120 Vdc via a single central distribution point in the power distribution unit (PDU) feeding subsidiary power distribution points in the various equipment modules. A functional block diagram of the EPS is depicted in Figure 36. The central power point at the PDU is double insulated from the box chassis and the Spacecraft ground. By design, double insulation requires two hard credible failures to result in loss of a central power point and, therefore, the likelihood of this occurring is extremely remote.

The bus voltage is regulated and controlled via the power control function performed by the PDU. The effects of transient loads on voltage regulation is minimized through the use of a bus capacitor bank located at the bus regulation point in the PDU. Each capacitor in the PDU main capacitor bank is fused. Equipment module and subsystem component main power, including batteries and solar array, is returned to a central point in the PDU which is then referenced to the Spacecraft prime power reference (PPR). The EPS provides intermittent duty switch power to two pyro busses for firing the pyrotechnic actuators on the Spacecraft at the beginning of the mission.

Ground command and on–board computer control of the EPS elements is effected through the C&DHS via the Spacecraft control computer (SCC). The power management software calculates battery charge rates based on battery depth–of–discharge, desired C/D ratio, and solar array/sun orientation. In addition, this software will perform load shedding, based upon a predefined schedule, in the event of a failure or an excessive overload that would exceed the maximum battery depth of discharge of 40%.

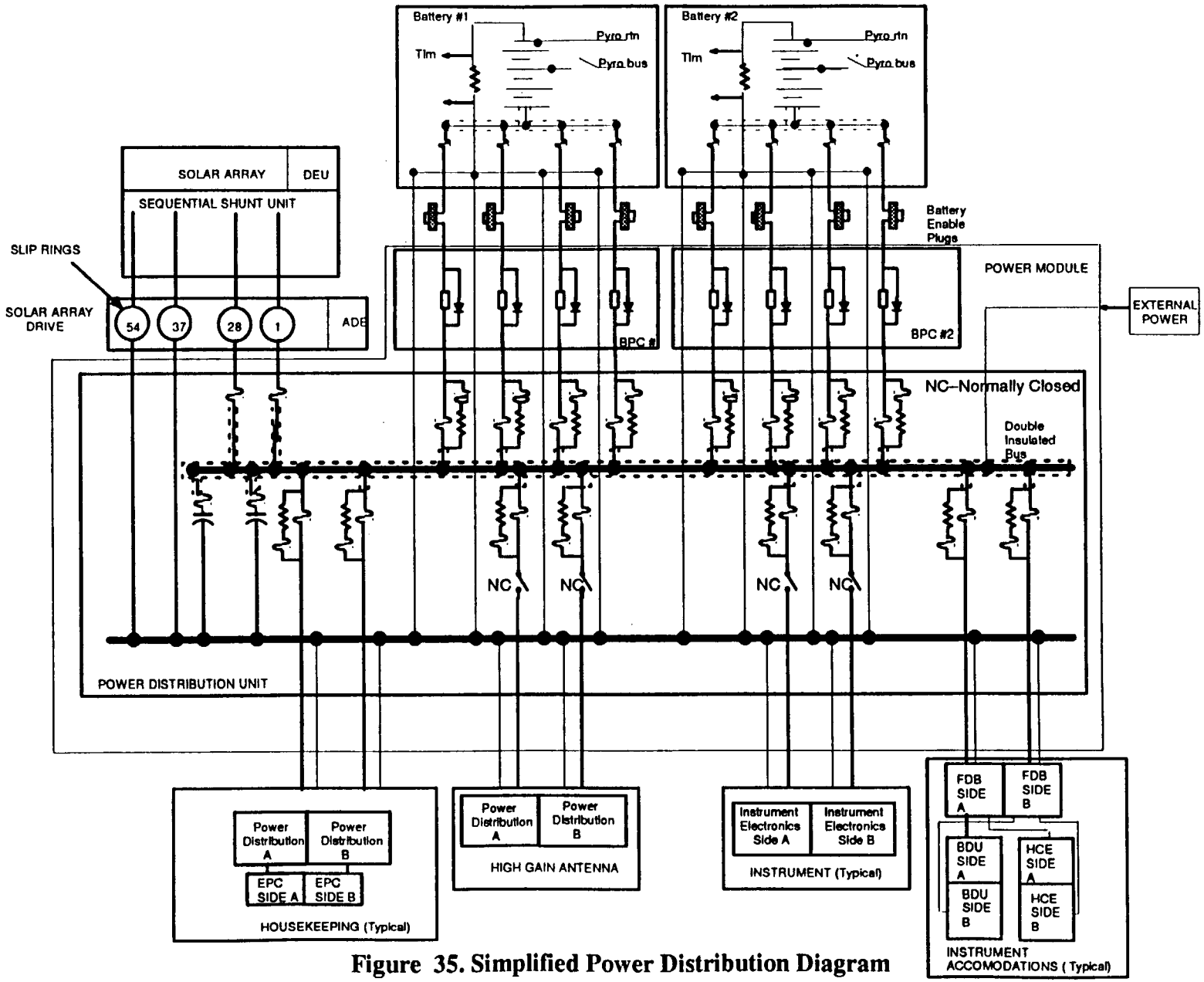

Figure 35. Simplified Power Distribution Diagram

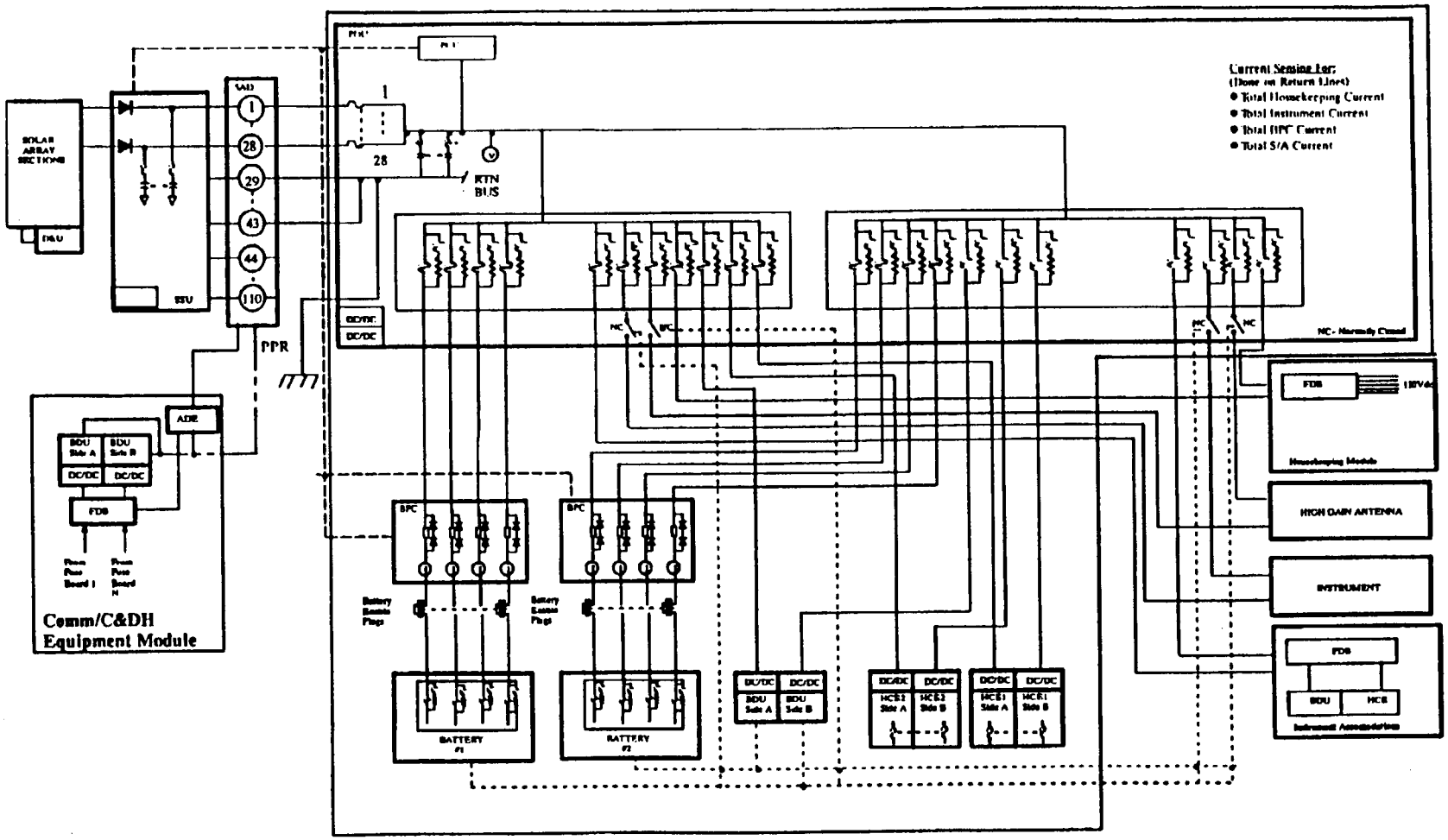

Figure 36. EPS Functional Block Diagram

7.2 EPS Functional Description

The EPS provides all instrument and housekeeping electrical power during all mission phases. The Spacecraft EPS is designed to be capable of supporting a total one orbit average load, referenced to the EPS load interface, of 2530 watts. The EPS/load interface is considered to be at the fused outputs of the PDU, (output of the fuse boards). The fuse boards consist of redundant fuses (1 pair per load) used to distribute power to each load. The EPS is designed to provide 100 percent of this required instrument power at the end of five years in orbit.

The Spacecraft EPS uses a gallium arsenide on germanium (GaAs/Ge) photovoltaic solar cell to convert incident solar energy to electrical energy. The solar array is sized to allow the EPS to provide 100 percent of the required power at five years in orbit, assuming the Spacecraft is in the sun–synchronous orbit, 705 km and 98.2–degree nominal inclination with a nodal–crossing range of 10:15 to 10:45 A.M.

The Spacecraft energy storage function utilizes space–qualified rechargeable nickel–hydrogen (NiH_2) batteries to store energy during orbit daylight and to supply power during eclipse. There are two batteries, each consisting of 54 series connected, NiH_2 50 ampere–hour cells, with bypass protection at each individual cell to provide protection against battery cell open failures. Each battery is designed to have an adequate energy reserve so that with one cell failure, the depth of discharge (DOD) will not exceed 35%; therefore cell redundancy is 54–for–53.

The EPS distributes +120 Vdc regulated power with a regulation of ±4% (±4.8 Vdc) to the instrument and subsystem interfaces. This electrical power is distributed to housekeeping equipment and instruments via a star–radial distribution system which provides fuse–protected power feeds to each load or to each side of internally redundant loads. The principal performance characteristics of the EPS regulated bus are listed in Table X.

Table X. EPS Regulated Bus Performance Characteristics

Parameter	Performance Characteristics
Steady State Voltage Range (dc avg., excluding ripple) @ user interface	115.2 to 124.8 Vdc
Maximum Self–generated Voltage	1.4 V_{p-p} 30 Hz to 2 kHz decreasing to 0.28 V_{p-p} at 50 kHz to 50 MHz
Transient Voltage Under/overshoot for a 10 A load step (From 50% Load to Full Load)	3.0 volts
Maximum Transient Recovery Time	10.0 millisecond
Source Impedance	<0.8 Ω increasing at a 2.5 μH slope between dc and 150 kHz

All wiring is short–circuit protected with fuses. Fusing is provided for instrument power feeds and heaters. The instruments provide their own on/off switching, low–voltage power conversion and isolation. All housekeeping subsystems provide their own on/off switching, and any additional switching, control, isolation and fault protection required. If required within a subsystem, bus voltage conversion to +28 Vdc ±2% is provided to housekeeping low–voltage users via EPCs and associated low–voltage distribution fusing.

Power is distributed via two fused feeds, which are isolated from one another at the fuse distribution box (FDB). The PDU feeds are implemented using a "redundant fuse" technique to guard against fuse failures disabling an entire feed. Subsequent power distribution from the FDB is channelized, so that primary component units of a subsystem are powered from feed #1, and backup units are powered from feed #2. This prevents a failure in a single feed from effecting both primary and back–up circuits.

The EPS provides protection for its power sources against overloads and faults in the distribution and user subsystems. It provides protection via hardware and software means to protect the distribution function against overloads and faults in the EPS. The EPS hardware command and telemetry interfaces, together with the onboard Power Management and Control Software (PMCS) provide the capability to monitor and control the EPS performance to the degree required to isolate and clear faults, and provide alerts for emergencies.

7.2.1 Power Regulation and Control

The mode controller, located in the PDU, regulates the voltage of the main distribution bus. This is done by controlling the amount of energy fed to the bus from the solar array via the SSU along with the amount of power discharged from, or charged to the batteries through the BPCs. The PDU contains the main capacitor bank, all power distribution circuitry, and various command, control, and telemetry functions. The mode controller provides regulation and control of the EPS through closed loop control of the solar array using the sequential shunt system in the SSU, and battery charging and/or discharging via the BPCs. The bus regulation characteristics resulting from this control are shown in Figure 37.

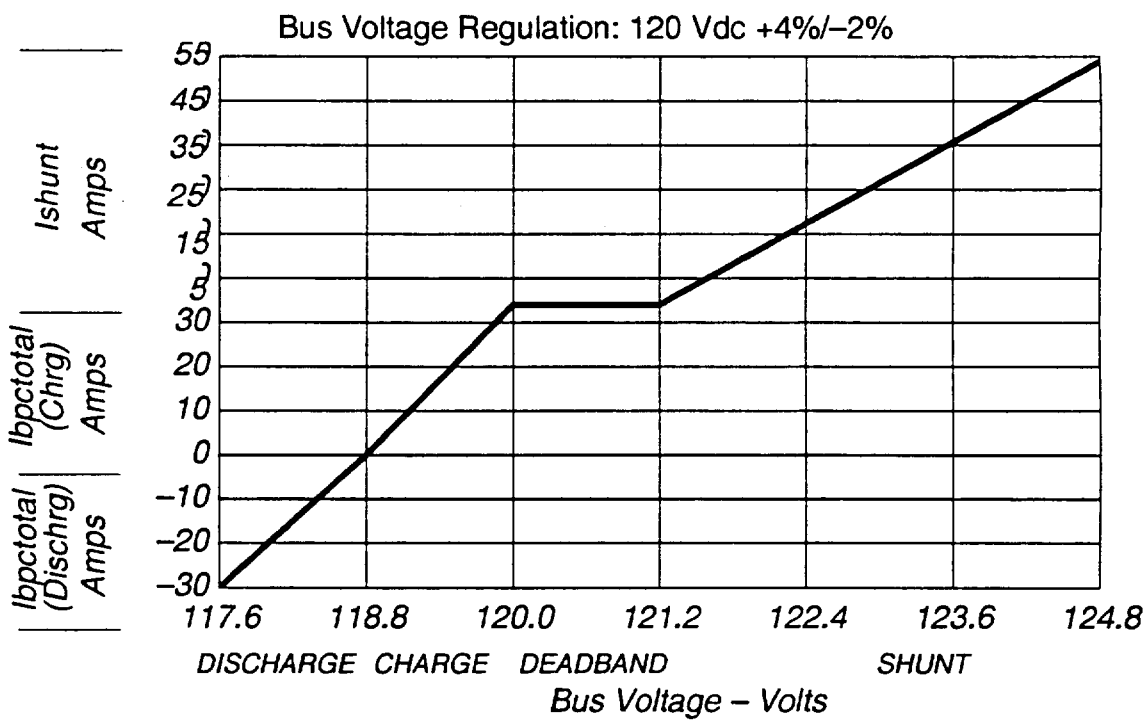

Figure 37. Bus Regulation at PCU Control Point

7.2.2 Power Generation

Power for the EOS-AM Spacecraft is provided by a one-wing solar array assembly (SAA). The array is sized to produce 5.0 kW of electrical power at 127 Vdc after five years in orbit.

The SAA wing consists of a single fold-out flexible blanket of 26 panels deployed by an extendable longeron mast. When stowed the mast is stored in a canister hinged to the SAD, and the blanket folds up into a blanket box under a preload compression to protect the solar cells during the launch phase.

The array deployment sequence begins with the pyro-release of the blanket box from its stowed location along the side of the Spacecraft structure, to swing out 60 degrees with the spring loaded SAD elevation hinge. Array blanket deployment is accomplished via actuators which release the blanket box top, after which the SAA deployment electronics unit (DEU) actuates the canister motor and cranks out the coilable continuous longeron collapsible mast thus extending the cell-laden blanket.

The solar array is rotated to maintain an orientation normal to the sun by the SAD, which is a part of the SMS. The SAD contains the power transfer rings by which power is conducted from the SSU to the Spacecraft, and signal transfer rings for array telemetry.

7.2.3 Energy Storage

Energy is stored in batteries comprised of series-connected individual pressure vessel nickel-hydrogen cells. Each battery consists of 54 cells in series; each cell has a nameplate capacity of 50 Ampere-hours (Ahr).

The batteries are charged during orbit daylight periods and supply (discharge) electrical power during eclipse. Normally, the DOD will not exceed 30 percent of nameplate capacity. Battery charging and discharging is controlled by the BPCs. The battery has a minimum life of five years, when maintained within specified temperature and temperature gradient limits for the expected 26,600 cycles in low earth orbit.

Battery open cell failure protection is provided by bypass protection which shunts current around the cell in the event of an open failure. With one failed cell the battery voltage is within the tolerable range of the charge/discharge regulator. There is no provision for on-orbit letdown or reconditioning of the battery panels or cells.

A diode-protected tap is provided at cell #22 of each of the two batteries to provide intermittent-duty pulse-current pyro busses to the pyrotechnic relay assemblies (PRAs) for activating the pyrotechnic actuator devices on the the Spacecraft. After the pyros are fired at the beginning of the mission, the two pyro busses are disabled by means of the pyro bus relay.

Primary and backup thin-film heater elements are provided on each cell, which are controlled by heater control electronics (HCE) located in the power equipment module and driven by the BDU located in the power module. Control thermistors for battery temperature telemetry (54 per battery) are all located at selected cells and on the battery panel base.

7.3 EPS Components

The Spacecraft power subsystem components are located throughout the Spacecraft. The major EPS assemblies and their locations are listed below:

a. The solar array assembly with the sequential shunt unit (SSU), located on the solar array deployment canister that rotates with the array

b. A power equipment module with a panel supporting the BPCs and PDU and one battery panel

c. Two battery panels, each one mounting the 54 cells of one battery (one in power equipment module, one in hex bay module)

7.3.1 Solar Array Assembly

The EPS uses a single wing, photovoltaic Gallium Arsenide (GaAs) solar array for conversion of solar energy into electrical power. The solar array assembly (SAA) for the EOS–AM Spacecraft is shown in Figure 38. The SAA includes the extendable mast and deployment canister, the flexible blanket laden with solar cells and a box assembly to contain the blanket during launch, the sequential shunt unit which is mounted to the mast deployment canister, and the associated mechanisms which release and deploy the array.

Electrically, the array is composed of 24 circuits. Each circuit consists of eight strings in parallel, each string consisting of 190 cells in series in order to achieve the required voltage at the worst–case temperature after five years. Each string is physically laid to the center of the panel and then back to the edge, neighboring strings are oriented so the currents run in opposing direction therefore minimizing the resultant magnetic moment and electromagnetic radiation. The solar panel substrate is a flexible Kapton/graphite/Kapton laminate. Flexible flat copper conductors are run along the blanket edges to provide electrical connections to the cell circuits.

The solar cells used are 2 x 4 cm gallium arsenide on a germanium substrate with a beginning–of–life (BOL) efficiency of 18%. The cells are 5.5 mil thick, with a 6–mil ceria–doped microsheet coverglass for radiation shielding.

The sequential shunt unit (SSU) that rotates with the array on the mast deployment canister connects directly to the solar cell circuits and to the SAD power transfer rings. The SSU includes 24 power mosfet switches, solar array isolation diodes, and input filters that are connected between the individual solar array outputs and ground. One switch is operated in pulse width modulation (PWM) mode, with others either full–on or full–off, to attain the desired array output voltage.

7.3.2 Sequential Shunt Unit

The SSU performs the following functions: (1) shunt excess solar array power during sunlight in order to maintain a regulated 120 Vdc bus; (2) provide fused 120 Vdc to the solar array DEU; (3) condition all solar array assembly telemetry; and (4) provide command decoding and telemetry encoding. The SSU also contains redundant dc/dc converters to provide bias power to internal circuitry and solar array isolation diodes.

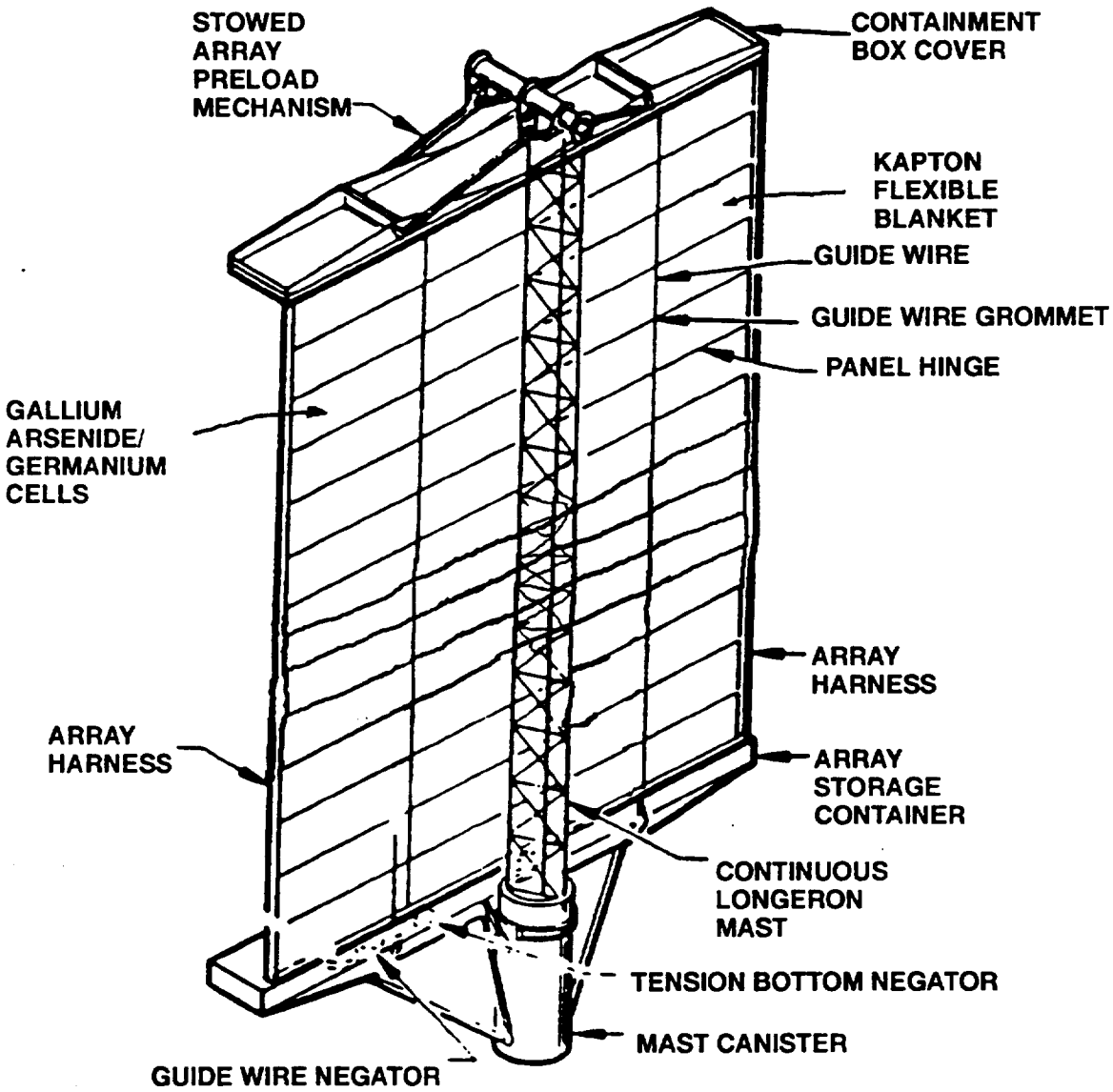

Figure 38. Solar Array Assembly

Shunting

The shunting system consists of 24 shunt elements one per solar array circuit, expandable to 28 shunt elements, each capable of pulse–width–modulating the solar array circuit from full on to full off. Shunt control is by the shunt mode error amplifier located in the PDU. This bus voltage error signal sequentially turns on shunts as additional shunting is required. Pulse width modulation (PWM) operation (at 200 kHz) ensures that filter component size is minimized while providing substantially lower dissipation over a dissipative linear shunt system.

Telemetry and Command Decoding

All solar array assembly and SSU generated telemetry is conditioned, multiplexed and digitized into a serial format to be sent to the BDU. Commands from the BDU are received in the SSU, decoded and issued as required. Redundant command decoders are utilized to prevent a single point failure.

7.3.3 Power Distribution Unit

The PDU serves as the central power distribution and control point for the Spacecraft. During sunlight, solar array power is delivered to the various Spacecraft loads and to the batteries for recharging. During eclipse, battery voltage is converted by the BPCs to +120 Vdc to provide regulated Spacecraft power. Under all circumstances, the PDU will provide 120 Vdc ±4% to the output power distribution fuse boards for delivery to the instruments and various subsystem equipment loads.

In addition to performing central power distribution, the PDU will control the bus voltage regulating elements (SSU and BPCs) via the mode controller contained within the PDU. The PDU will also contain the main capacitor bank and double insulated bus bars, command and telemetry interfaces, dc/dc converters, fuse distribution boards, current sensors and control boards.

The PDU capacitor bank will consist of 64 capacitor pairs to make up a low ESR 1000 microfarad assembly. Each capacitor pair will be provided with a fuse to preclude a single point failure associated with a capacitor short.

Fused boards will be implemented with a redundant fuse scheme (2 fuses +1 fuse bypass resistor) for each output. Command and telemetry circuits will provide primary and redundant interface capability to the primary and redundant BDUs. The telemetry inputs will consist of current, voltage, and temperature. Two dc/dc converters will be cross–strapped to provide reliable internal power capability. Fuses in the SAA circuit lines will provide protection to the bus against a failure of a module in the SSU or SAD.

The mode controller section of the PDU will contain bus voltage mode controlling amplifiers, multi–phase clocks, battery charge rate and voltage/temperature (V/T) select circuitry, and two serial command line/command decoders. All circuit functions will be on–line redundant. Major circuit functions will be as follows:

Mode Controller

Redundant mode controllers will be incorporated to provide separate charge/discharge and shunt operating modes. During charge mode the output voltages will be capable of being overridden by charge rate select levels as well as V/T limit levels. Eight identical, but isolated, control signals will

be distributed to BPC #1 and eight additional control signals sent to BPC #2. Any single BPC channel failure will not cause any remaining channels to fail. Three identical, but isolated, control signals will be distributed to the SSU, in such a way that any failure of one line shall not cause the remaining line to fail.

Multi–Phase Clock

A redundant multi–phase clock will be incorporated to provide four 100 kHz signals (spaced 90 degrees apart) to each BPC. Any single BPC channel failure will not cause the remaining clocks to fail.

Charge Rate Select and V/T Limits

Two internally–redundant charge rate select, and V/T limit select circuits will be used. These limits will be used to regulate the battery current or limit the battery voltage.

Serial Command Line and Command Decoder

A serial command line will be used to receive charge rate and V/T commands from the BDU. The PDU control section will utilize redundant command decoders to decode all appropriate commands.

7.3.4 Battery Power Conditioner

The BPC performs two major functions: (1) boosts the battery voltage to 120 V to provide regulated Spacecraft power during eclipse, and (2) acts as a bucking regulator to provide battery charging during sunlight. The BPC is controlled by the mode controller located in the PDU.

Discharge Control

During eclipse periods the BPC is controlled by the mode control error amplifier in the PCU and the four BPC channels act as canonical–boost regulators. The bus voltage error signal is used by the BPC to regulate the bus voltage to the specified limits using pulse width modulation. Current sharing is assured between BPCs due to the implementation of current–mode (conductance) control. In the event of an overload, the pulse–width is reduced to zero to protect the switches, and the channels cease switching.

Charge Control

During sunlight periods the BPC is controlled by the mode control error amplifier to act as a canonical–buck regulator to charge batteries as well as vary the battery charge current to regulate the bus. Maximum battery charge rates and V/T limits are sent as commands from the BDU to the PDU, where they are decoded.

Power Channels

The charging and discharging function is accomplished by use of a bidirectional switching–regulator converter topology. Four 600–W power channels are utilized, each with independent current loops, to provide the required output power while providing overcurrent shutdown protection. In the event of a channel failure, the three remaining power channels are capable of providing the maximum 1800 W power requirements.

Each power channel receives two control inputs from the PDU: a (redundant) control voltage and clock. The control voltage sets a channel charge to discharge level determined by the conductance of the channel design (2 amps per volt, for example). The clock provides the channel switching frequency as well as channel phasing. Each channel is operated at 100 kHz and is phased 90 degrees from each other. This provides lower ripple current and thus reduces the filter component size and weight.

Each BPC channel can be inhibited by means of a ground command or local failure detection. However, a hardware interlock is provided by the PDU to prevent more than one channel from being turned off by command. Moreover, each BPC channel has a ground commandable failure detection override.

7.3.5 Fuse Distribution Box (FDB)

The FDB is the +120 Vdc and +28 Vdc power distribution and protection point at the instrument and subsystem locations. It will consist of connectors and a number of fuse boards designed to distribute +120 Vdc to the EPC and associated hardware at a given location. Figure 39 shows how power is distributed via the FDB within a typical equipment module. Power is distributed to each of the instruments in a similar fashion.

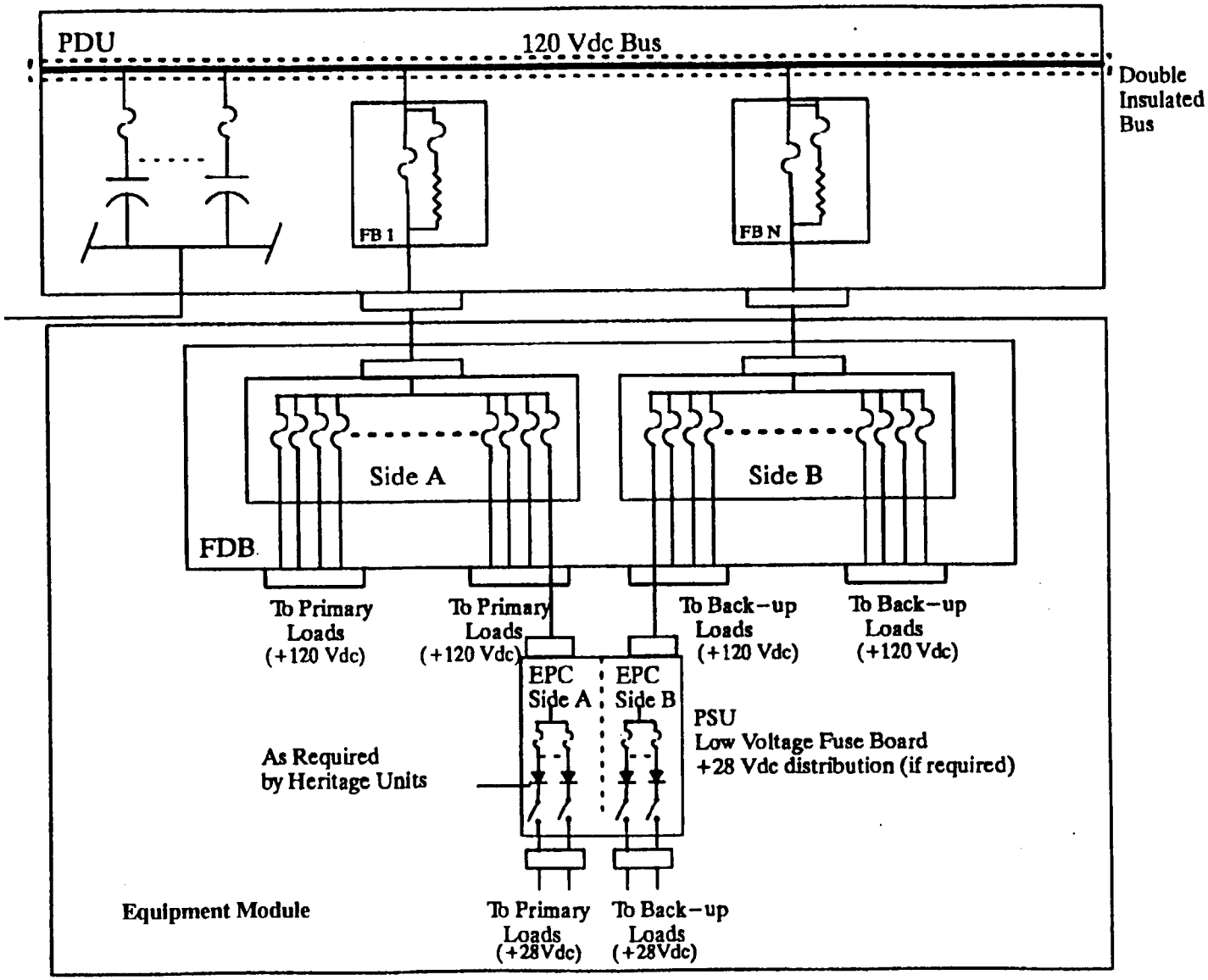

Figure 39. Equipment Module Power Distribution

8 ELECTRICAL ACCOMMODATIONS SUBSYSTEM (EAS)

8.1 Electrical Accommodations Functional Description

The EAS provides all inter-subsystem and inter-component electrical interconnections, and implements the system and major-assembly level grounding requirements of the EOS Spacecraft.

Additionally, electronic assemblies are provided to apply firing current to the electro-explosive devices (EEDs) used on the EOS Spacecraft. These devices are used in the pyrotechnic mechanisms of the solar array and High Gain Antenna (HGA) deployment systems.

Electrical Accommodations provide for the following classes of interconnections:

a. 120 Vdc primary power distribution and 28 V secondary power distribution

b. C&DH data busses, high-rate data links, and discrete wiring

c. Grounding and signal reference connections

d. Pyrotechnic cabling

The interconnection functions are provided by the Spacecraft core harness assembly, EM harness assemblies, instrument accommodations harness assemblies, the Signal Reference Plane (SRP), the Prime Power Reference (PPR), and attachment hardware for all of the foregoing. The harnessing segmentation is shown in Figure 40.

8.2 Electrical Accommodation Components

Equipment module harnesses interconnect the individual components within the module. Instrument accommodation harnesses interconnect the BDU and Spacecraft core harness with the supported instruments. The Pyrotechnic Relay Assembly (PRA) is mounted on the Spacecraft core close to the EEDs and receives drive signals from the C&DHS. The PRA provides EED-firing current from the battery bus and incorporates special safeguards against EMI or other potential causes of inadvertent firing.

8.3 Core Harness

The Spacecraft core harness uses shielding and/or physical separation to segregate signal categories and redundant cables from other harness assemblies. In particular, all pyrotechnic cabling is physically separated from its redundant cable assembly. Major trunk segments are attached to structural members. Harness branches connect the trunks to the EMs, instruments, core-mounted equipment, umbilical, and GSE connectors.

8.4 Grounding

The overall grounding scheme for the EOS Spacecraft is shown in Figure 41. The prime power reference dc single-point ground is identified where the return of the primary power bus and the fault grounds of each EM and instrument are connected together. The SRP, comprised of adhesive-backed metallic foil tape fastened to the primary structure tubes and bonded to the end-fittings, provides a low-impedance path for RF signals and shield grounds.

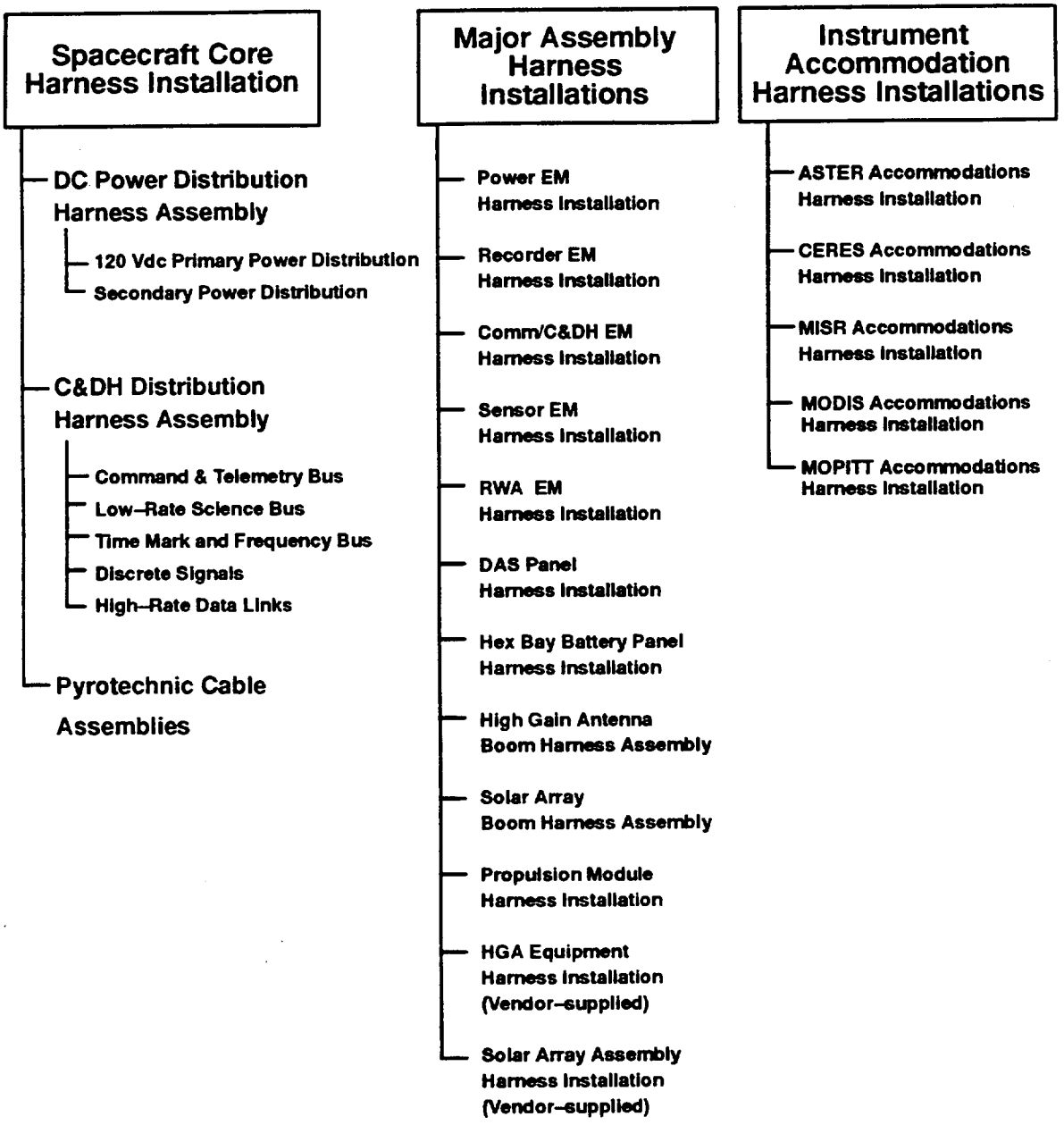

Figure 40. Harness Segmentation

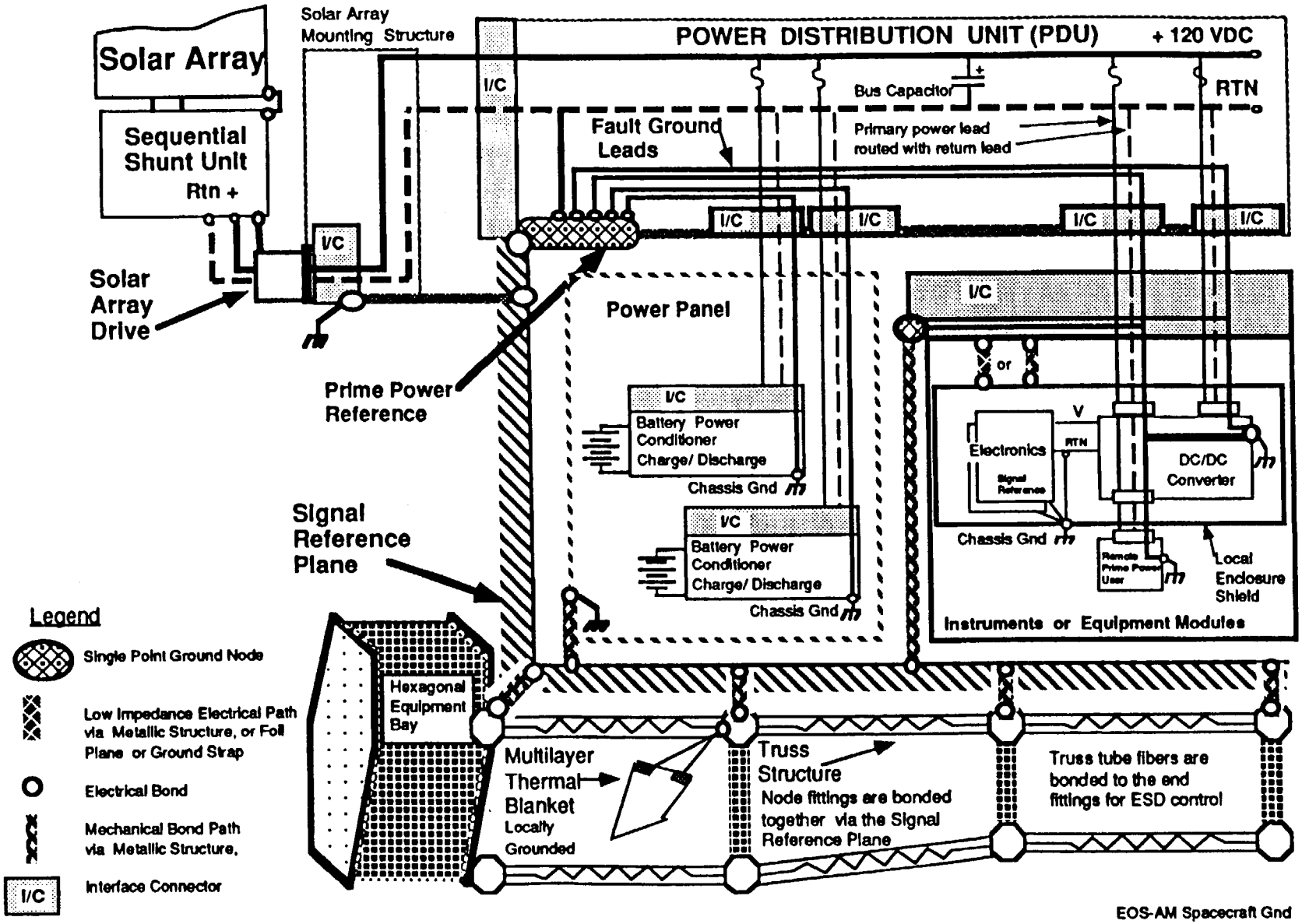

Figure 41. Spacecraft Grounding Diagram

(This page intentionally left blank.)

9 GUIDANCE, NAVIGATION, AND CONTROL SUBSYSTEM (GN&CS)

9.1 GN&C Performance and Capability Margins

The GN&C subsystem provides for the determination and control of the EOS Spacecraft attitude, orbit, and appendage articulation. The subsystem must support a wide range of Spacecraft system operating modes, providing normal, and backup pointing modes. The subsystem must also support propulsive operations for orbit adjust and boost modes.

Thrusters are used to perform all slew maneuvers, including earth acquisition and reacquisition. Four reaction–wheel assemblies (RWAs) are used for primary attitude control. Three magnetic torque rods are used for momentum unloading. Key performance parameters are given in Table XI. The pointing and navigation performance is predicated on parameters affecting atmospheric density being within the indicated limits.

Table XI. GN&C Performance

Repeated Ground Track ±20 km at all latitudes, cross track, 3 σ

Sun synchronous orbit control ±15 minutes, local mean solar time

Earth–Acquisition, Earth–Pointing, In–plane Delta–V, Out–of–plane Delta–V, slew, and hydrazine boost modes.

Safe Mode Controller implemented independent of Spacecraft Controls Computer

Normal, on–orbit pointing at instrument interface (arc–sec, 3σ, per axis)
- Knowledge: 90 asec
- Accuracy: 150 asec
- Stability: **(TBS)**
- Jitter: **(TBS)**

Navigation Accuracy: 150 meters, 3σ, per axis

Worst–case atmospheric density criteria (3σ):
- Solar Radio Flux (F10.7) = 230
- Geomagnetic Activity Index (AP) = 400

Worst–case RWA momentum utilization:
- Less than 75% of capacity

9.2 Attitude Control and Pointing Capabilities

The GN&C subsystem autonomously controls the Spacecraft attitude, and maintains a navigation state vector, which allows attitude knowledge to be provided to instruments. Attitude control and knowledge are referred to the instrument cubes. The pointing allocations are provided in Table XII; more details can be found in EOS–DN–SE&I–043 "EOS Pointing Error Budget and Verification Concept." Attitude control errors and instrument positioning errors differentiate Pointing Accuracy from Pointing Knowledge.

Table XII. Instrument Pointing Budget

Budget Item	Knowledge at Instrument I/F 3 σ (arc–seconds)			Accuracy at Instrument I/F 3 σ (arc–seconds)		
	Estimates			Estimates		
	Roll	Pitch	Yaw	Roll	Pitch	Yaw
Total Dynamic (RSS)	15.6	15.4	11.2	17.3	17.1	13.5
Total Static (RSS)	43.0	64.8	41.7	52.5	71.4	83.9
Total Error Allocation	58.6	80.1	53.0	69.8	88.5	97.4
Requirement	**90**	**90**	**90**	**150.0**	**150.0**	**150.0**

The pointing knowledge and pointing accuracy required by each of the EOS–AM instruments is given in Section 4 of this document.

9.3 GN&C Block Diagram

The GN&C subsystem, as shown in Figure 42, comprises sensors, actuators, an attitude control electronics (ACE), and software. Some components are linked by C&DHS hardware.

Primary sensing is provided by the star tracker for attitude and the inertial reference unit (IRU) for attitude rate. The three–axis magnetometer (TAM) senses the geomagnetic field. Backup attitude sensing is provided by the earth sensor assembly (ESA) for the roll and pitch axes, and by gyrocompassing for the yaw axis. The fine sun sensor (FSS) serves as a back–up sensor for attitude determination if one star tracker fails and back–up stellar acquisition mode sensor. Primary navigational inputs are from the TDRSS Onboard Navigation System (TONS) with standard TDRSS ground–based orbit determination as backup. TONS estimates EOS Spacecraft position, velocity, drag coefficient, and master oscillator frequency. TONS also supports onboard time maintenance and provides Doppler compensation predicts for the S–band transponder. TONS is dependent upon receiving adequate TDRSS scheduled services.

Primary attitude control is provided by the reaction wheel assemblies (RWAs), with momentum unloading by magnetic torque rods (MTRs). Thrusters within the (propulsion subsystem) provide for backup attitude control and/or momentum unloading, as well as for attitude slewing and velocity corrections.

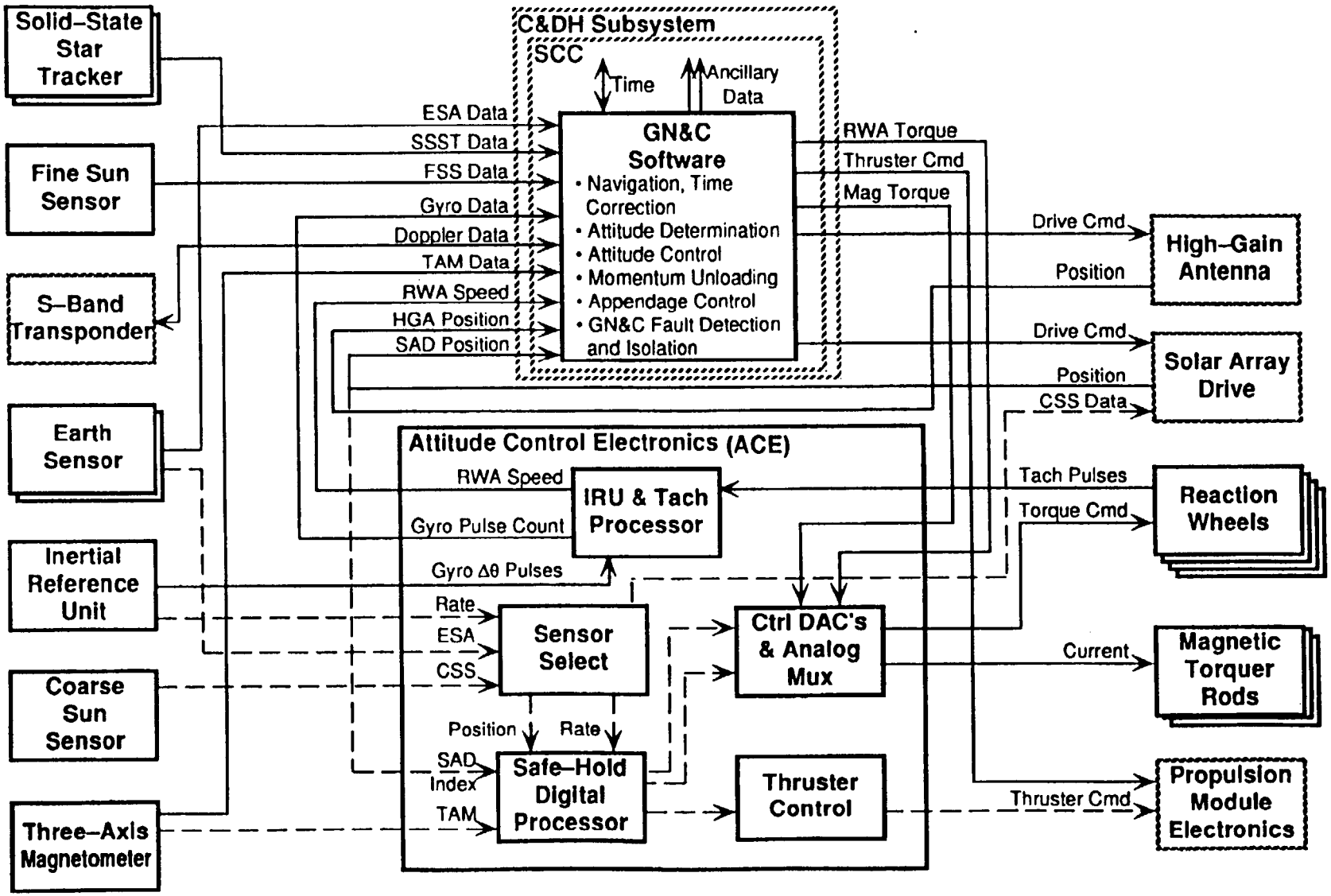

Note: Dashed boxes not part of GN&C subsystem.

Figure 42. GN&C Subsystem Functional Block Diagram

Most GN&C algorithms are implemented by flight software resident in the C&DH Spacecraft controls computer (SCC). GN&C primary mode functions are accomplished by a fault-tolerant system which includes fault detection, isolation, and recovery (FDIR) capability, using functional and component redundancy. GN&C acquisition modes serve also as backup modes, and enable graceful transition to and from the primary modes, as necessary.

TONS navigation software resides in the SCC. Safe-mode control is implemented via the ACE. The ACE provides coarse attitude control of the EOS Spacecraft in the event of a major C&DH system problem.

9.4 GN&C Software Functions

The relationships among the GN&C software functions which provide knowledge and control of attitude, orbit, and appendage articulation, are shown in Figure 43. In addition, a number of overhead functions are required, including mode selection and control, and FDIR. The flight software tasks required to implement the GN&C functions are listed in Table XIII.

9.5 Safe-Mode Control

The GN&C safe-mode control subsystem (SMCS) (Figure 44), provides for contingency attitude control, independent of the SCC. The SMCS takes over control of the primary GN&C hardware as a result of ground command, or upon initiation by "watchdog" circuitry in the C&DH subsystem. This circuitry monitors periodic outputs from the SCCs which indicate continued functional "health" of the SCCs and their resident software. The SMCS is activated when no viable SCC is available by FDIR or by ground command. The SMCS remains in control until a ground command returns control to the primary system and/or overrides the watchdog function.

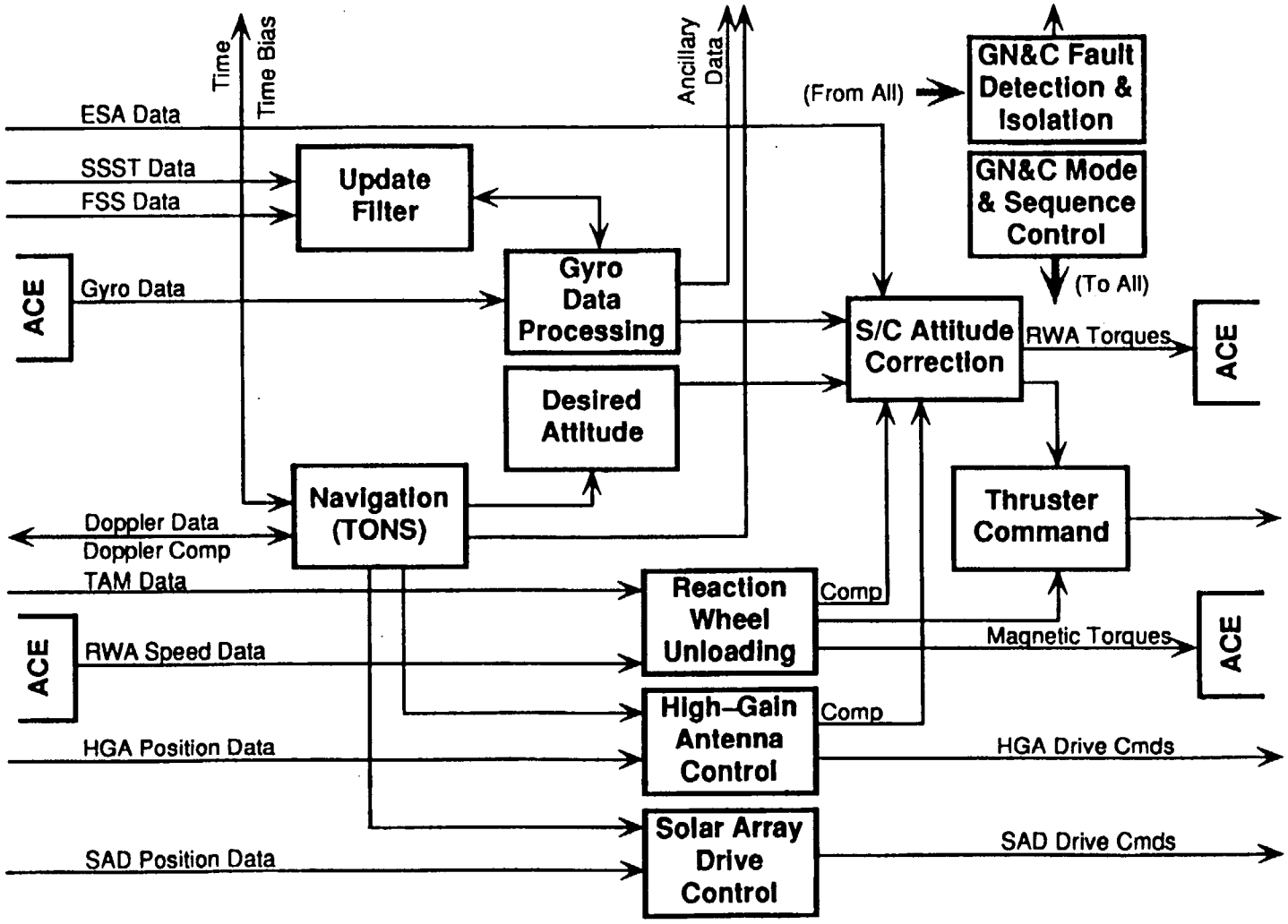

Figure 43. GN&C Software Functional Block Diagram

Table XIII. GN&C Flight Software Tasks

Gyro data processing
- Filter gyro data
- Convert body rates

Update filtering
- Propagate state
- Filter sensor data
- Generate attitude updates
- Maintain star catalog

Navigation
- Predict and filter Doppler data
- Estimate EOS position and velocity
- Compute TDRS position and velocity
- Accumulate Spacecraft clock time bias
- Compute position of sun and moon

Desired Spacecraft attitude

Spacecraft attitude correction
- Normal mode
- Acquisition and maneuvers
- RWAs or thrusters

Thruster command generation

Reaction wheel unloading
- Magnetic torquers or thrusters

High Gain Antenna and Solar Array Drive control

Mode and Sequence Control
- Task scheduling
- Sensor selection
- Attitude correction mode

Fault Detection, Isolation, and Recovery (FDIR)
- Detection of anomalous conditions
- Autonomous transition to Safe Mode

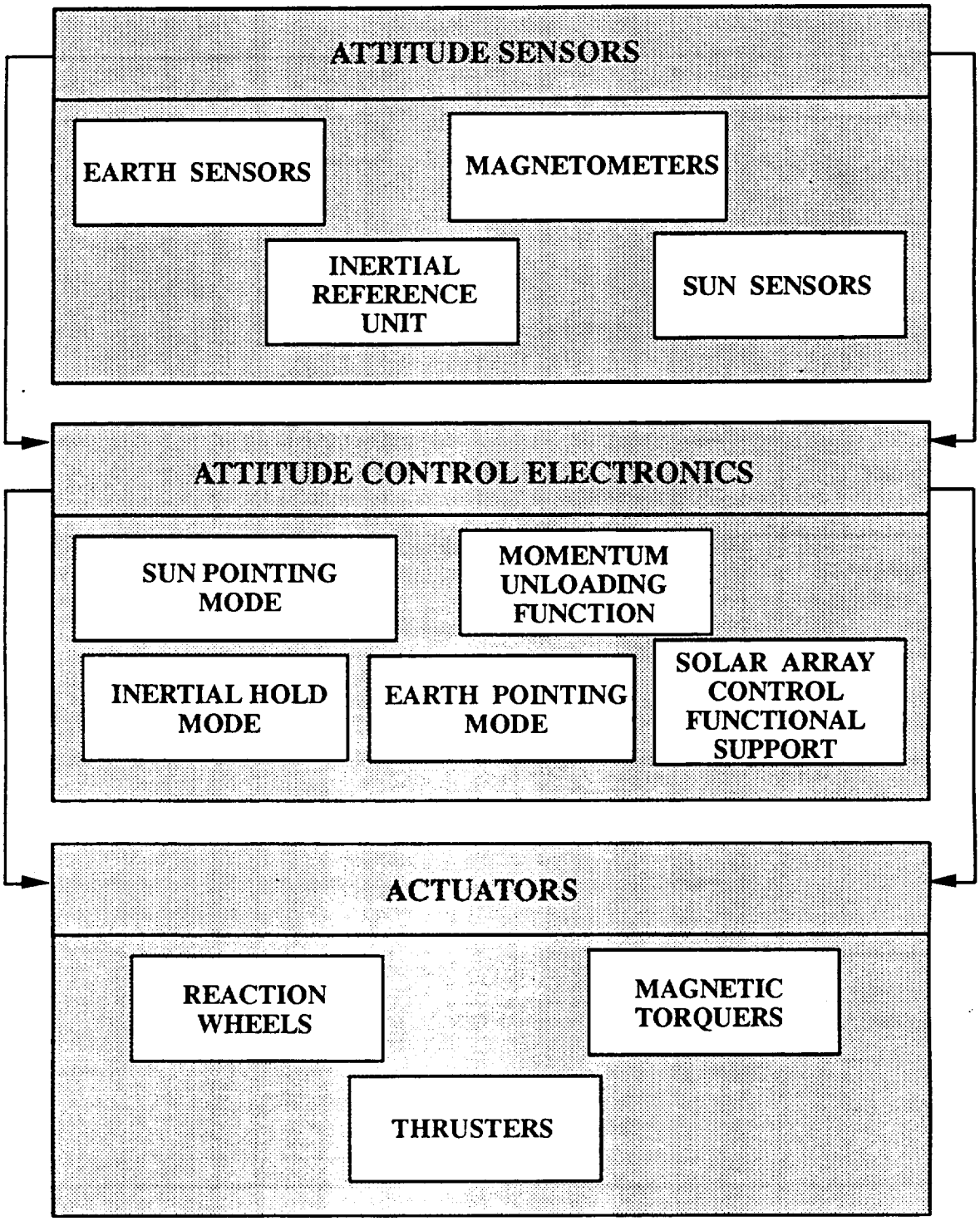

Figure 44. Safe Mode Block Diagram

(This page intentionally left blank.)

10 PROPULSION SUBSYSTEM (PROPS)

10.1 Propulsion Subsystem

The EOS propulsion subsystem incorporates hydrazine as a monopropellant with catalytic thrusters to provide impulse capability for orbit circularization, orbit maintenance, attitude control, and backup momentum management. Operationally, the subsystem relies on pressure blowdown within a single propellant tank to deliver fuel to a functionally redundant thruster manifold. All propulsion subsystem components and interface equipment are contained within the propulsion module. Included as support equipment within the propulsion module are: EPCs for power conversion, FDBs for power fusing and distribution, HCEs for heater control, and a BDU for command and telemetry handling.

10.2 Propulsion Functional Description/Architecture

A functional diagram of the propulsion subsystem and its relation to the propulsion module and other major Spacecraft subsystems is depicted in Figure 45. The subsystem is divided into primary and redundant branches with fully redundant Propulsion Module Electronics Assemblies (PMEAs), attitude control thrusters, and latching valves. Functionally redundant and cross–strapped delta–V thrusters are utilized to meet all EOS orbit acquisition and maintenance requirements. All subsystem commands are received by the PMEA which provides signal conditioning and control functions required to drive the thrusters, heater circuits, and latching valves. Power conditioned from 120 V to 28 V is provided to each PMEA which directs and controls power distribution to all subsystem components.

The subsystem is comprised of a single 40.6–x–33.8 inch spheroidal propellant tank with a maximum capacity of 760 lb_m, twelve attitude control thrusters, four delta–V thrusters, two service valves, a pair of latching isolation valves, two filters, and a pressure transducer. Depicted in Figure 46 is a schematic representation of the propulsion subsystem. An elastomeric diaphragm within the tank expels propellant by providing a separation barrier between the pressurant and hydrazine fuel. Individual servicing of propellant and pressurant is achieved via separate and dedicated service valves. This tank and manifold configuration permits loading and unloading of the subsystem in either a vertical or horizontal positions. Engine half–systems are interconnected by a cross–coupling manifold, which makes available the full propellant load to either set of thrusters. Latching valves can are utilized to isolate the thrusters from a particular propellant source, if necessary, and to provide a third inhibit to propellant leakage. The all welded subsystem manifold is constructed of both titanium and stainless steel to minimize the required number of transition tubes.

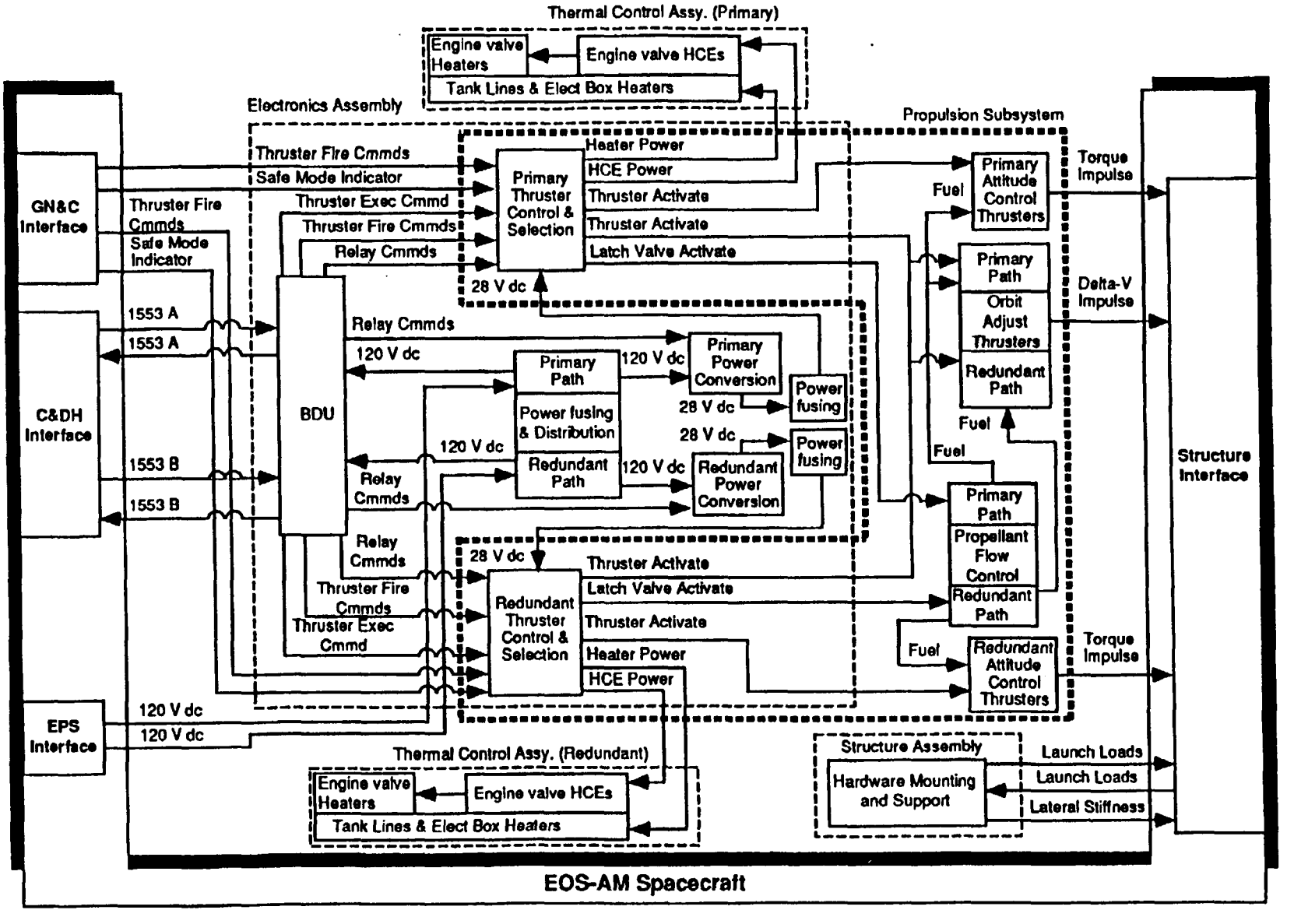

Figure 45. Propulsion Subsystem Functional Diagram

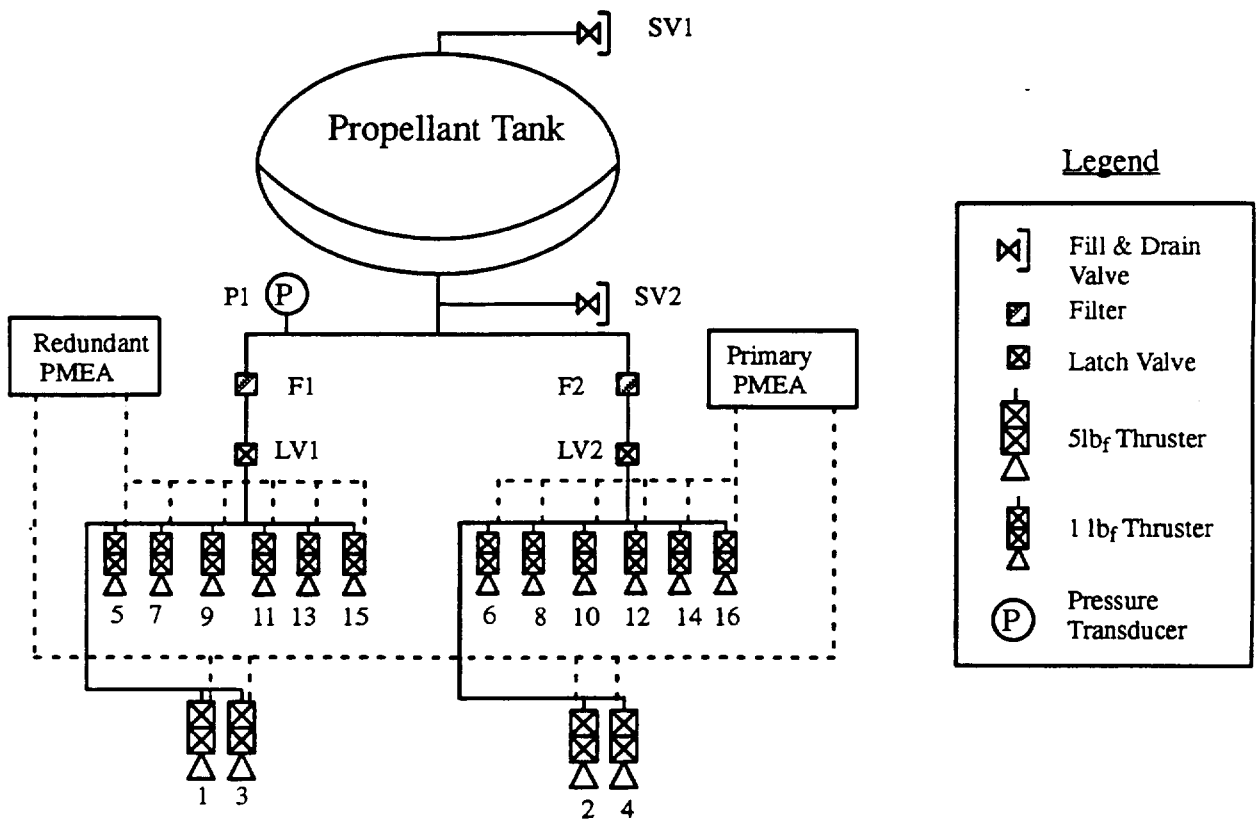

Figure 46. Propulsion Subsystem Schematic

A thermal balance method is utilized to provide an extremely accurate estimate of fuel remaining and allows periodic updates with increasing accuracy throughout Spacecraft life. This non–intrusive application of the existing thermal control and telemetry subsystems is based on the change in temperature of the tank and fuel system over a given period of time. Since propellant mass is the only variable in the tank/fuel system following pressurization lockout, the specific heat of the system is directly related to propellant remaining. Calibration readings are taken of the empty tanks prior to launch and in a fully loaded condition immediately after separation. Propellant gauging accuracies will vary from 3% of the system capacity at BOL to 0.1% at one year before tank depletion is scheduled to occur. Two additional methods are provided to supply a redundant estimation of remaining propellant, the pressure–volume–temperature (PVT) method and the book–keeping method.

10.3 Propulsion Avionics

10.3.1 PMEA Definition

The PMEA provides signal conditioning and control functions required to drive the monopropellant thrusters, heater circuits, and latching valves from standard interface circuits provided by the BDU and the serial input of the ACE interface. The PMEA also provides the signal conditioning required to convert output level signals from temperature sensors and pressure transducers associated with the Propulsion Subsystem into standard analog voltage signals compatible with the BDU interface circuits.

10.3.2 EPC Definition

The Electrical Power Conditioners receive primary and redundant 120 V fused power and return feeds from the 120 V fuse distribution boxes. Electrical isolation shall be maintained between the redundant feeds. The EPC's output interfaces directly to the 28 V FDBs before being distributed to propulsion module components.

10.4 Propulsion Components

The EOS propellant tank is constructed of titanium and are configured exactly the same as the propellant tanks being used on the TDRS program. The TDRS tank design exceeds all the EOS design requirements with proof and burst factors of safety of 1.25 and 1.5 times its MEOP of 400 psia. Each tank has a volume of 28,144 cubic inches, with a maximum storage capacity of 760 lbm of hydrazine. Propellant management for the propellant tank is achieved with an AF–E–332 diaphragm.

Flight proven 1–lbf and 5–lbf rocket engine assemblies (REAs) will be used for mission delta–V and control of the EOS Spacecraft. Each thruster consists of a series–redundant propellant valve, a thrust chamber assembly, redundant valve and catalyst bed heaters, a temperature sensor attached to the aft injector flange, and a heat shield. REA worst–case throughput has been evaluated for the EOS design and demonstrates significant margin. The 1–lbf REA has been qualified for a throughput of 58,500 lbf–sec and 420,000 pulses (the valve is qualified to over a million pulses). The 5–lbf REA has demonstrated a throughput capability of 103,271 lbf–sec with more than 20,000 total pulses. The in–flight data base for these engines has demonstrated that these engines are not duty cycle sensitive.

REA thrust and Isp vary linearly with engine valve inlet pressure. Nominal thrust is 0.9 lbf and 5.4 lbf for each REA, respectively. The maximum expected flight pressure resulting from thermal excursions is 400 psia. The REAs have demonstrated proper performance up to inlet pressures of 420 psia. The minimum system design pressure is 100 psia. Engine function has been demonstrated at pressures as low as 50 psia for the 5–lbf REA and 75 psia for the 1–lbf REA. Average pressure throughout the EOS mission is 225 psia resulting in an Isp of 217 seconds, assuming an off–pulse duty cycle of 85% and nominal engine performance.

All REAs are required to operate in both a steady–state mode and pulsing mode. The REA is completely insensitive to helium saturation levels in the propellant. No limitations are placed on the engine in terms of burn duration, hot restarts, or duty cycle. The minimum response time for the 1–lbf REA is 10 ms while the 5–lbf REA minimum pulse width is 15 ms. Steady–state impulse bit predictability is 1%. Comparing the thrust deviation of our REA data base with the qualification unit shows that the worst–case thrust deviation is less than 5%.

Subsystem service valves are small, inline, flange mounted, manually operated valves. Internally, the valve is constructed of all stainless steel and includes Teflon seals. After RCS loading, the valves are torqued closed, and a third redundant seal is provided by an outer cap screwed over the valve body. Isolation latching valves use a torque motor–actuated design with latching forces supplied in both the open and closed positions by permanent magnets. A flexure tube both isolates the torque motor from the fluid passages and acts as the primary valve spring.

The pressure transducer has an all–welded outer case with pressure fittings that are made from stainless steel to provide high strength, low weight, and good corrosion resistance. The pressure transducer provides a 5 Vdc output at full scale range. An integrated electronics package provides complete signal conditioning and input/output isolation. The pressure range covered by the transducer is 0 to 400 psia with a total full scale accuracy of ±0.5%. The use of these high accuracy transducers enables the user to estimate propellant usage to a worst–case accuracy of 3.8% of the tank capacity (this occurs near scheduled tank depletion).

The in–line propellant filters used on EOS are stacked etched disc filters. Propellant filters are sized to a 15–micron limit and are capable of four times the maximum expected contaminate level of the subsystem. The filter elements are held in an all–titanium housing. Propellant filters are located in each half–system. In addition to these filters, each thruster and latching valve comes equipped with a 30–micron inlet filter to protect the individual component.

10.5 Propulsion Module Functional Description/Overview

The propulsion module for the EOS–AM Spacecraft is a separately built and tested assembly which contains the propulsion subsystem, structure, supporting avionics and thermal control equipment. The propulsion module provides impulse to the Spacecraft, as required, for three–axis attitude control, orbit adjustment, and maintenance. An isometric view of the propulsion module is depicted in Figure 47. Primarily, the module consists of a rear bulkhead, stabilizing struts, a propellant tank, thrusters, BDU, and electronics. Total dry mass of the propulsion module is 341.3 lbm. Integration and testing of the module is performed separately from and parallel to the Spacecraft bus. At the completion of propulsion module integration and test, the propulsion module is inserted into bay one of the Spacecraft primary structure. Service valves, which are accessible at all times during test and launch site loading operations along with low point propellant tank outlet ports, enable propellant off–loading if required.

Four EPCs provide power conditioning for all propulsion module components. Electrical interconnections among all components and a local single–point ground are provided by the electrical accommodations subsystem. The thermal control subsystem maintains all component and propellant temperatures within prescribed limits through the use of active heater control, multilayer insulation blankets, and surface coatings.

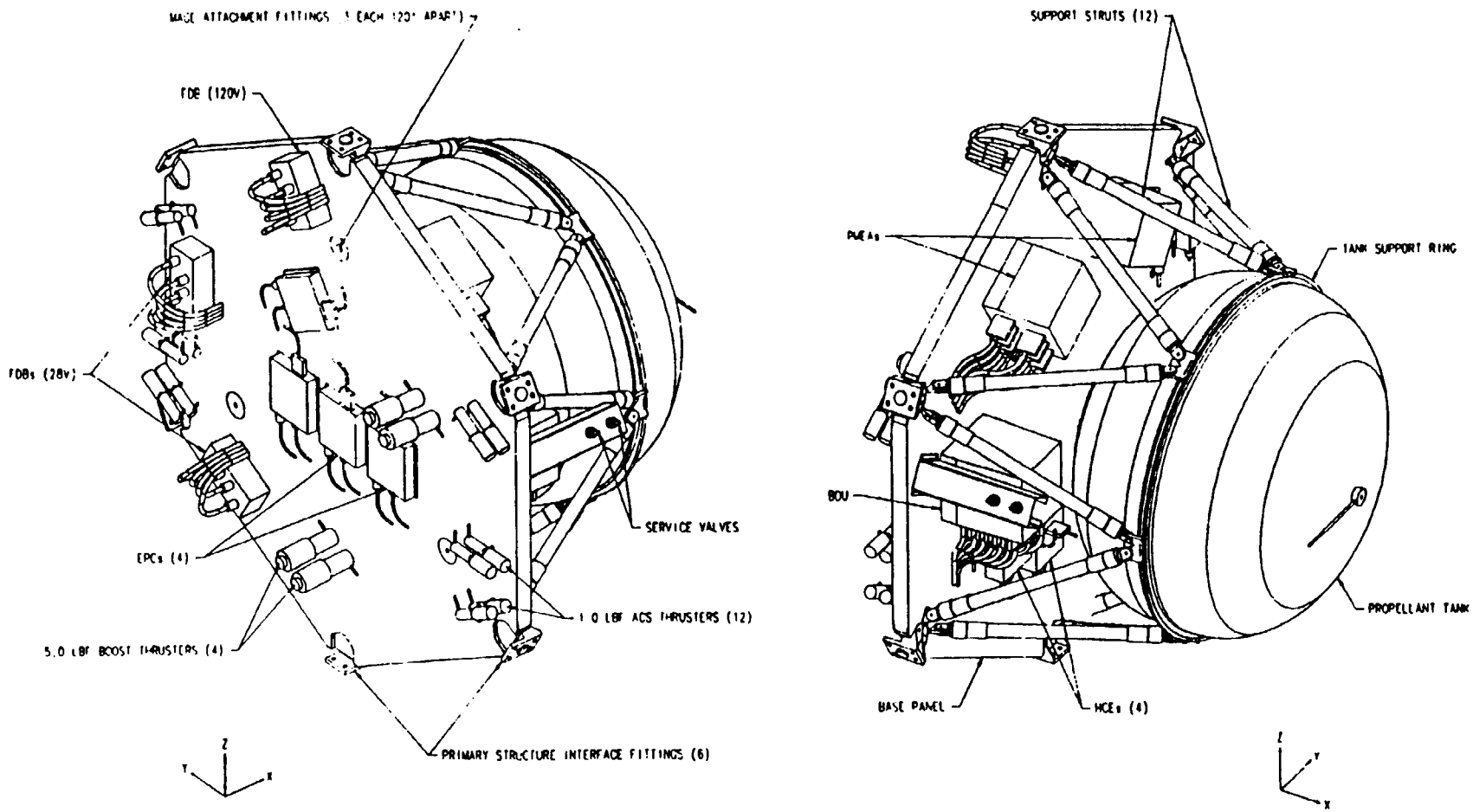

Figure 47. Propulsion Module

11 COMMAND AND DATA HANDLING SUBSYSTEM (C&DHS)

11.1 C&DHS Functions and Services

The command and data handling subsystem (C&DHS) provides onboard computing resources to accomplish Spacecraft control and digital communications in support of inter-module, intra-subsystem, and inter-subsystem data traffic. It is responsible for the baseband handling of all uplinked command data transfers received from the communication subsystem (COMMS) and for coordinating the telemetering of all Spacecraft and Instrument-generated data to be downlinked through the COMMS or hard–lines.

There are a number of services the C&DHS provides to subsystem components and Instruments to accomplish control and communications. These services include:

a. Distribution of realtime and stored commands generated on the ground or by the onboard software.

b. The periodic collection of Spacecraft Bus telemetry and Instrument housekeeping telemetry and the formatting of these data for transmission to the ground and the onboard software.

c. The gathering, formatting, multiplexing, and recording of multiple streams of packetized Instrument Science Data.

d. The generation and distribution of the synchronization service, standard time service, and precise time service

e. The onboard communication of digital data between and among the distributed hardware and software components of Spacecraft subsystems and between Spacecraft subsystems and Instruments.

f. Providing the processing and software resources required for the execution and storage of the programs and data belonging to the onboard subsystems.

g. The input and output of data from/to subsystem sensors/effectors and Instruments, including appropriate signal conditioning and conversion of signals between the analog and digital domains.

h. Accepting the SCC–based Flight Software Subsystem prepared and formatted ancillary data message, then replicating and delivering the ancillary data message to the onboard Instruments and transmitting it to the ground for ground system use.

11.2 C&DHS Block Diagram

The C&DH subsystem is distributed throughout the EOS–AM Spacecraft with interfaces to all other subsystems and to the Instruments. A block diagram of the C&DH subsystem components showing how they are distributed about the Spacecraft is depicted in Figure 48.

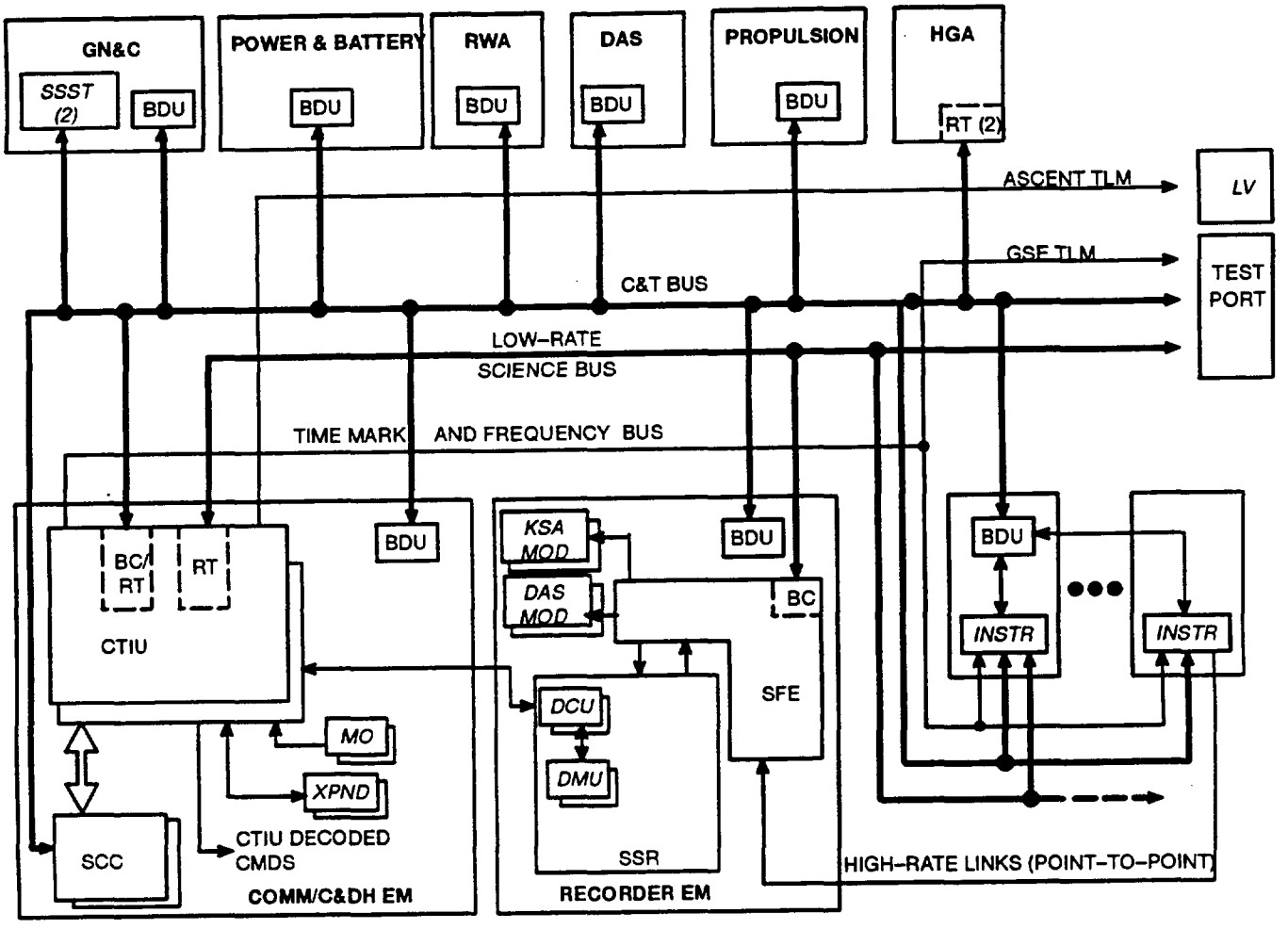

LEGEND

BC	= MIL-STD-1553B Bus Controller	*MO*	= Master Oscillator
BDU	= Bus Data Unit	*MOD*	= Modulator
C&T	= Command & Telemetry	*KSA*	= Ku-band Single Access
CTIU	= Command and Telemetry Interface Unit	RT	= MIL-STD-1553B Remote Terminal
DAS	= Direct Access System (Comm)	RWA	= Reaction Wheel Assembly
DCU	= Data Control Unit	SCC	= Spacecraft Controls Computer
DMU	= Data Memory Unit	SFE	= Science Formatting Equipment
GN&C	= Guidance Navigation and Control	SSR	= Solid State Recorder
GSE	= Ground Support Equipment	SSST	= Solid State Star Tracker
HGA	= High Gain Antenna	TLM	= Telemetry
H/K	= Housekeeping	*XPND*	= S-band Transponder
INSTR	= Instrument		
LV	= Launch Vehicle		

NOTE: All busses are redundant
Italics : Non-C&DHS Equipment
BOLD : Equipment Module

MIL-STD-1553B BUS

Indicates number of components

Figure 48. Command and Data Handling Subsystem Block Diagram

11.3 C&DHS Components

The major components of the C&DH subsystem and their primary function are listed in Table XIV. Control of most Spacecraft functions is provided by redundant Spacecraft Controls Computers (SCCs) that are part of the C&DH subsystem. The SCCs are nominally configured as one active and the other as cold–standby. However, the Spacecraft can operate with both SCCs powered–on for diagnostic operations. The command/telemetry interface unit (CTIU) provides the communication interface for uplinked commands and the housekeeping telemetry. The command and telemetry bus (C&T bus), which is the onboard communication link between the CTIUs, BDUs, and instruments, is a redundant serial data bus. The SCCs utilize the controlling CTIU for Spacecraft command distribution and receives C&T bus data gathered by the CTIU. On each bus, one CTIU (active) acts as the bus controller (BC), the other CTIU (hot standby) acts as a remote terminal, and all other nodes are configured as remote terminals (RTs). The bus data units (BDUs), residing near Instruments and within housekeeping equipment modules, provide the monitoring and control services to their associated instruments or Spacecraft components. Standardized input/output (I/O) circuit modules interface the BDUs to sensors, effecters, and other units.

Dedicated point–to–point data links carry high–rate instrument data to the Science Formatting Equipment (SFE). The SFE generates formatted science data for the realtime links and for storage within the Solid State Recorder (SSR). The SFE routes the data to the appropriate destination. A separate bus, the low–rate science bus, handles low–rate instrument data. The SFE is the BC on the low–rate science bus while the Instruments and the CTIUs are RTs.

Table XIV. Major Components

Subsystem Component	Qty	Major Function
Spacecraft Controls Computer (SCC)	2	FSWS software processing resource, only one powered
Command and Telemetry Interface Unit (CTIU)	2	Central component for Spacecraft commanding and telemetry generation, only one active
Bus Data Unit (BDU)- Housekeeping	6	Interface to housekeeping equipment for command distribution and telemetry gathering from/to the CTIU
Bus Data Unit (BDU)- Propulsion	1	Interface to Propulsion Module for command distribution and telemetry gathering from/to the CTIU
Bus Data Unit (BDU)- Instrument	3	Provides point-to-point interfaces for critical and configuration type commands and telemetry
Science Formatting Equipment (SFE)	1	Receives, multiplexes, formats, and routes science and housekeeping packets
Solid State Recorder (SSR)	2 DCU 2 DMU	Storage of housekeeping data for anomaly resolution Storage of formatted frames prior to playback to SFE

11.3.1 Spacecraft Controls Computer

The Spacecraft Controls Computer (SCC) controls most of the Spacecraft functions. There are redundant SCCs which implement the MIL-STD-1750A Instruction Set Architecture. Each SCC hosts firmware to provide basic power-up functions, e.g., a bootstrap loader and initialization routines. Once loaded, the active SCC's software provides a real-time Operating System (OS)

kernel and supports the execution of application software (S/W) for the Spacecraft subsystems and for Instruments. The software is written, to the extent possible, in the Ada programming language. The redundant SCC is in a cold-standby state. Both SCCs can be simultaneously powered and host the full software load but the standby SCC can never be a hot-standby.

The SCC has the capability to store and initiate the execution of command sequences.

11.3.2 Command and Telemetry Interface Unit

The CTIU is the central interface component for the C&DHS. A CTIU has a number of different interfaces:

a. to a Spacecraft subsystem which has both an embedded C&T RT and BDU as shown in Figure 49

b. to the SCC-based FSWS as shown in Figure 50

c. to an Instrument as shown in Figure 51

d. to COMS as shown in Figure 52

e. to Spacecraft equipment or C&DHS component only through a BDU as shown in Figure 53.

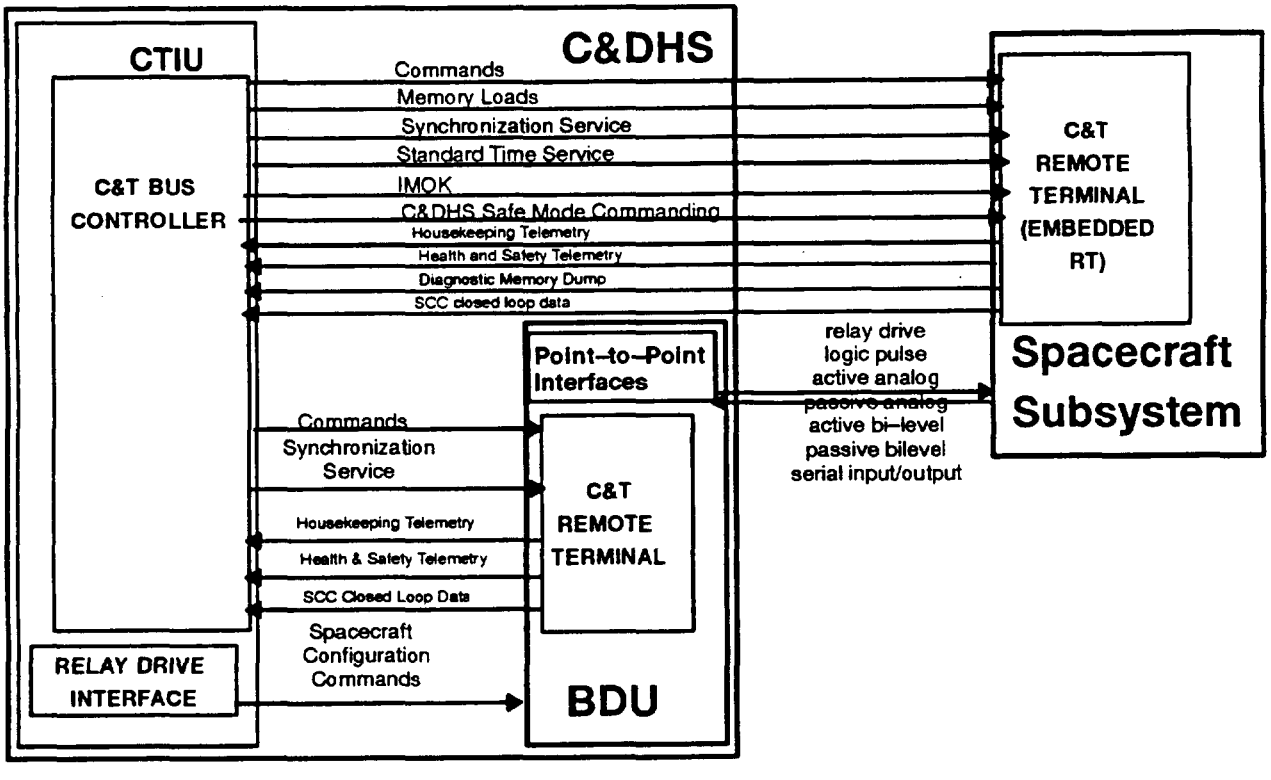

Figure 49. C&DHS Functional Interfaces with Spacecraft Subsystem with Embedded RT

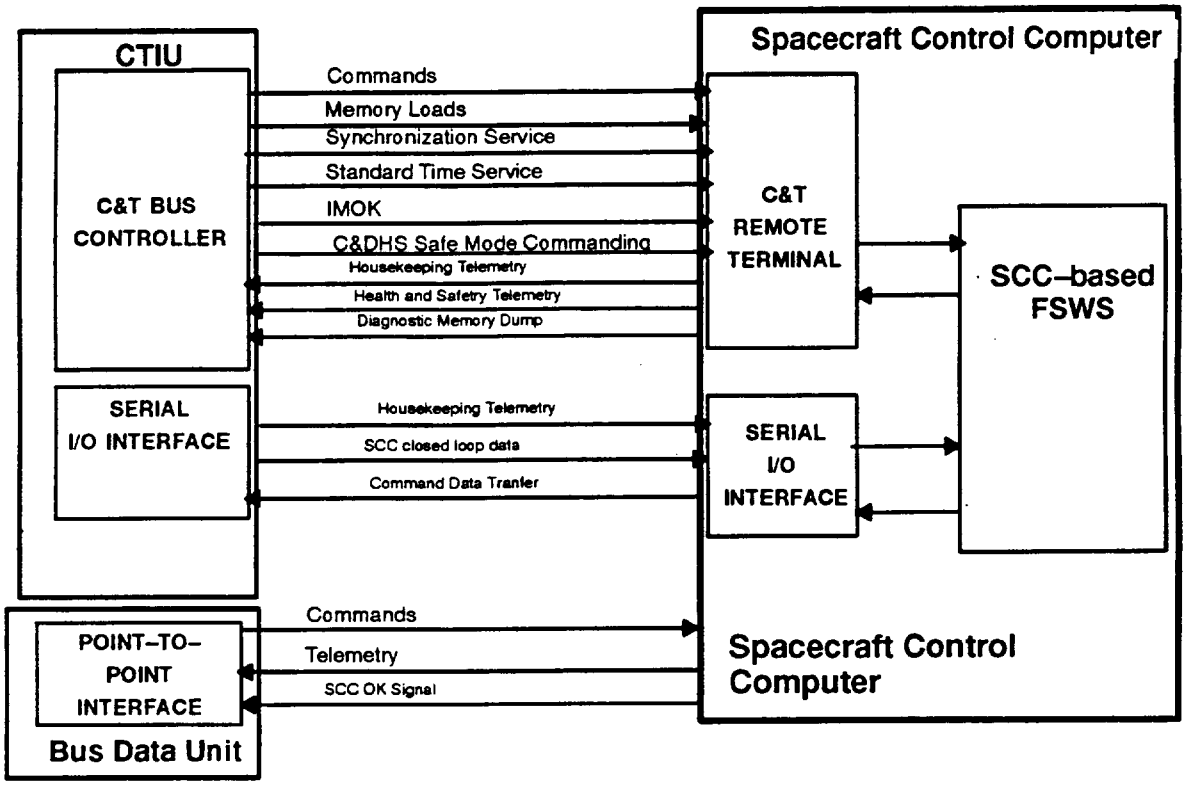

Figure 50. C&DHS Functional Interfaces with SCC–based FSWS

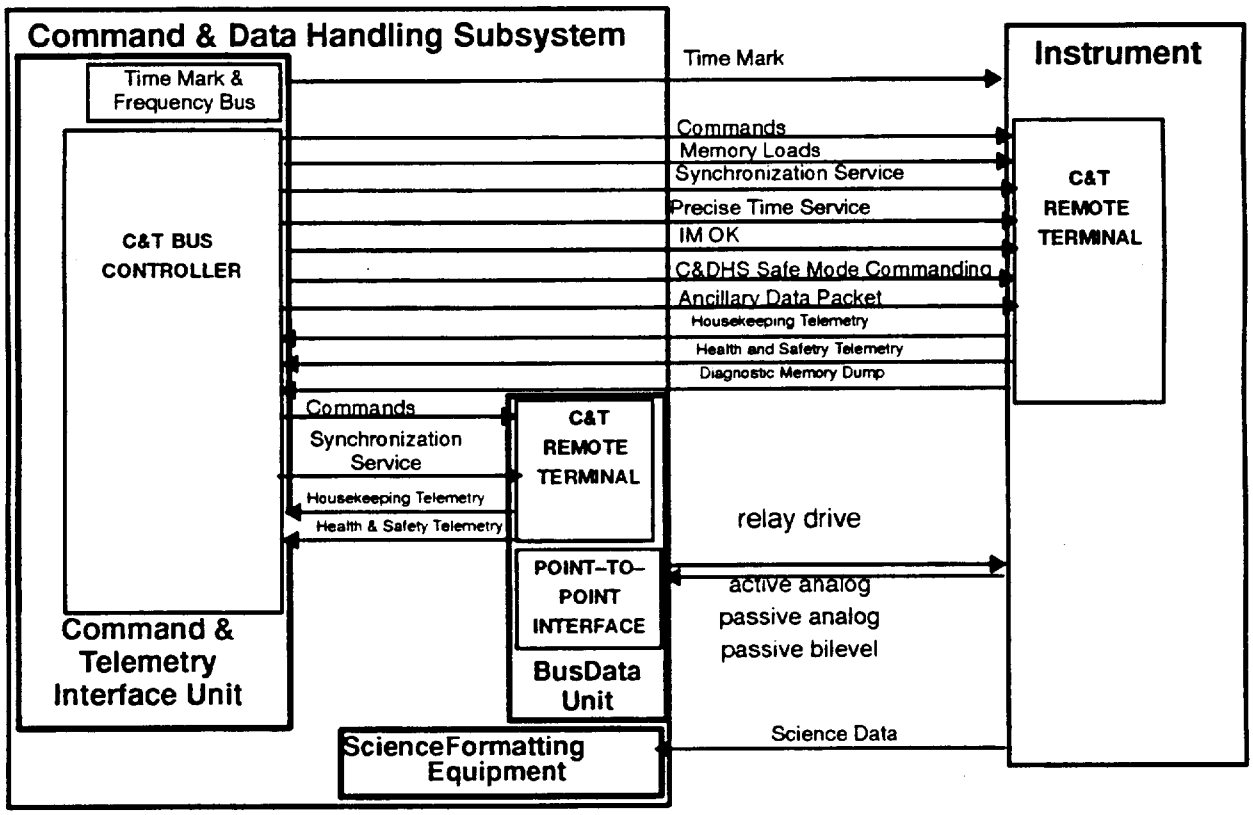

Figure 51. C&DHS Functional Interfaces with an Instrument

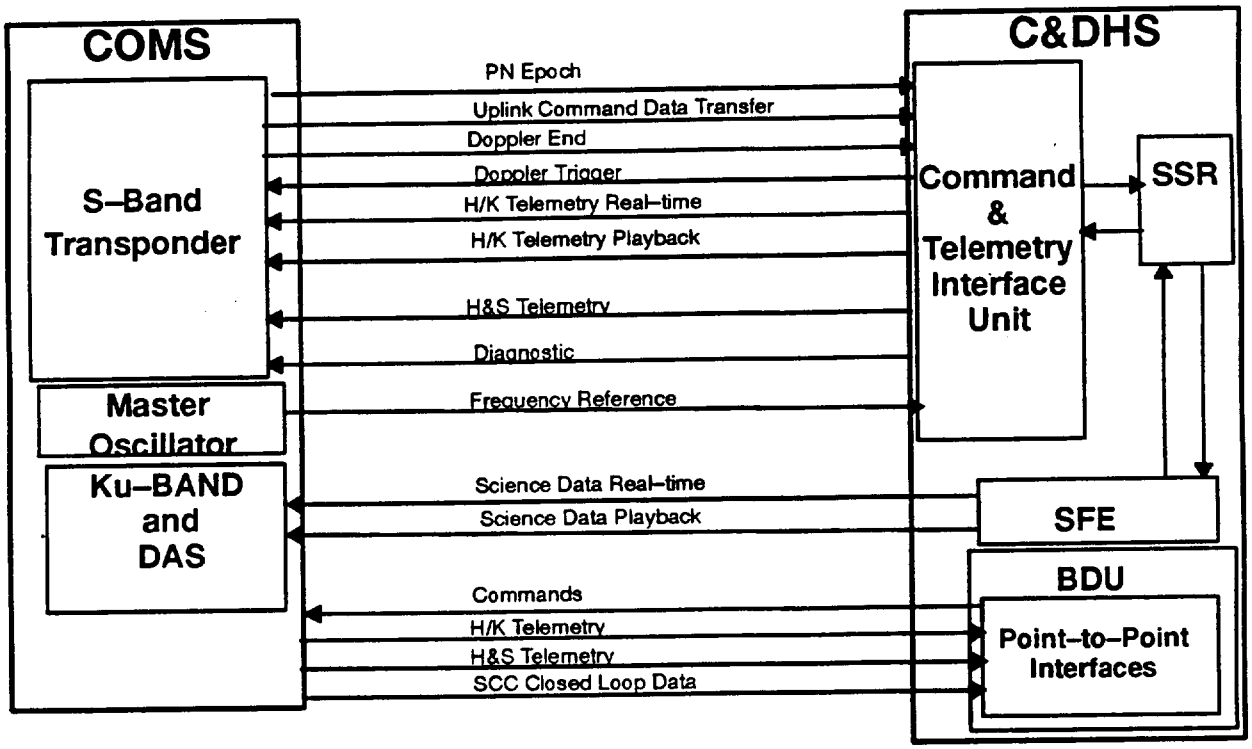

Figure 52. C&DHS Functional Interface with COMMS

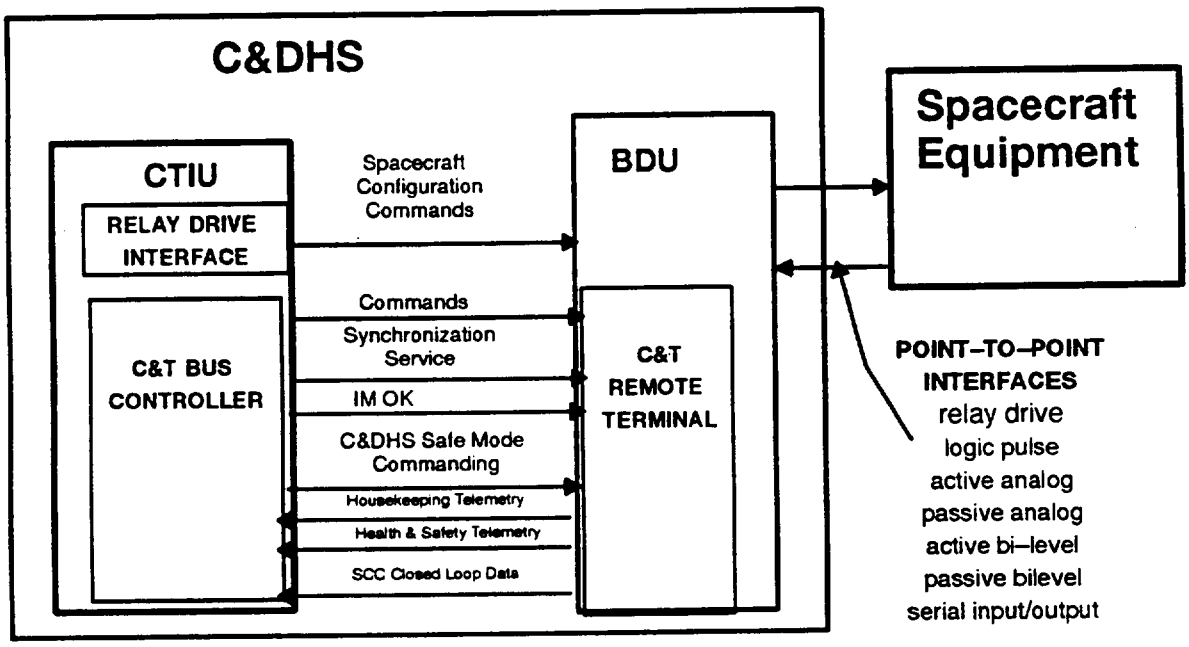

Figure 53. C&DHS Functional C&T Interfaces with Spacecraft Equipment (BDU)

Both CTIUs are always on whenever the Spacecraft is powered. The operational states for a CTIU are active, standby and test. Both the active and standby CTIU (1) process the uplinked command data transfer, (2) can receive uplink commands via the Forward Link (uplink) Service and (3) have an operational low–rate science remote terminal. Only the active CTIU:

a. distributes commands to Spacecraft subsystems and Instruments

b. gathers telemetry data from the Spacecraft subsystems and Instruments

c. accepts data from the active SCC–based FSWS

d. delivers data to the active SCC–based FSWS

e. supplies data for inclusion in the science data stream

f. provides downlink data via the S–band transponder

g. distributes H/K telemetry data to onboard storage for later playback to the S–band transponder

h. provides the Spacecraft master clock

i. provides the synchronization, standard time and precise time services

j. monitors the health/status of the active SCC–based FSWS

k. replicates and distributes the ancillary data packet.

The command and telemetry (C&T) bus is a redundant serial data bus using a Digital Time Division Command/Response Multiplex Data Bus (MIL-STD-1553B) protocol, which supports single and multi–word data transfers. This data bus is central to transferring the Spacecraft commands and telemetry data within the Spacecraft Bus. The active CTIU is the bus controller (BC) while the standby is a remote terminal (RT) on the C&T bus.

The bus and bus–related transactions are controlled by CTIU resident schedules to ensure the C&DHS provided services exhibit a deterministically bounded timing performance for its real–time operations. These schedules are based on a minor cycle of 8 millisecond cycle, a major cycle containing 128 minor cycles (1.024 seconds) and a master cycle containing 64 major cycles (65.536 seconds).

The active CTIU utilizes two dedicated high speed serial Input/Output (I/O) electronic interfaces with the active SCC–based FSWS. The CTIU–to–SCC interface provides the SCC with the Spacecraft bus data (SCC closed-loop data and H/K telemetry). The SCC–to–CTIU interface is used to transmit onboard command data transfers to the active CTIU for distribution. The active CTIU configures these interfaces on command. A loop back is performed as part of the interface checkout.

As shown in Figure 52, the CTIUs have several COMS interfaces. The CTIUs utilize interfaces to the S–band transponders (1) in support of the uplink and downlink of data (2) time–tag of the the pseudo–noise epoch and (3) time–tag of the the Doppler Integration Interval. The CTIUs interface with the master oscillator to derive its synchronization and time services. Via the BDU interfaces, the active CTIU can transmit 1553B messages containing commands to COMS and retrieve telemetry. Any faults detected by either CTIU are reported in telemetry.

11.3.3 Bus Data Units

The Bus Data Units (BDUs) are internally–redundant components whose function is to provide a standard set of command and telemetry interfaces to Spacecraft housekeeping components and Instruments. BDUs are distributed throughout the EOS Spacecraft. The BDU is powered on/off and reconfigured via relay drive commands received from either the standby or active CTIU. A BDU communicates with the active CTIU's C&T bus controller via a MIL–STD–1553B dual redundant C&T remote terminal interface. At the remote terminal interface, the BDU validates messages addressed to it. Its design allows for a possible single re–transmission of a C&T message. The BDU Command and Telemetry Execution Unit (CTEU) routes MIL–STD–1553B messages to and from the remote terminal, performs message processing, issues effector commands, samples and formats sensor telemetry data for transmission to the CTIU. The BDU receives C&T bus messages containing (a) synchronization service (synchronize with data word mode code), (b) BDU sample schedule table, (c) subsequent data gathering request, and (c) commands.

Standardized Input/Output (I/O) circuit modules interface the BDUs to sensors, effectors, and other units. The interfaces permit the BDU (1) to send relay drive commands, (2) to deliver commands via a serial I/O interface, (3) to send logic pulse commands, and (4) to sample telemetry via BDU serial, active/passive analog, or active/passive bi–level telemetry interfaces. The BDU provides signal conversion and signal conditioning between the analog and digital domains.

11.3.4 Science Formatting Equipment (SFE)

The Science Formatting Equipment (SFE) is part of the high–rate data handling system for the EOS Spacecraft. The SFE accepts asynchronous data in the form of CCSDS Version–1 source packets from both the Low–Rate Science Bus and multiple redundant high rate point–to–point electrical links. The packets are then assembled into CCSDS CADUs, and transferred synchronously on four channels to the High Rate Modulators (KSA and DAS) at rates of up to 150 Mbps each. The high–rate data handling system includes a Solid State Recorder (SSR) for recording the science data for playback to the KSA and DAS modulators. The SSR has interfaces to the CTIUs for recording and playback of the H/K telemetry data. The overall system interface block diagram is shown in Figure 54.

The SFE routes a selectable set of CADU data, either in real time from Instruments or playback from the SSR, to a combination of modulator inputs. The two type of outputs are the Ku–band Single Access (KSA) and the Direct Access System (DAS) modulators. The available combinations of data links are summarized in Table XV. Two redundant sets of channels (CH1 and CH2) are allocated to each type of modulator, but only one set to each modulator is active at a given time.

For receiving serial commands, the SFE includes a command/telemetry interface to the BDU. SFE operating mode commands and input/output rate commands are received through this interface. Serial telemetry generated by the SFE is provided to the BDU via a serial digital interface.

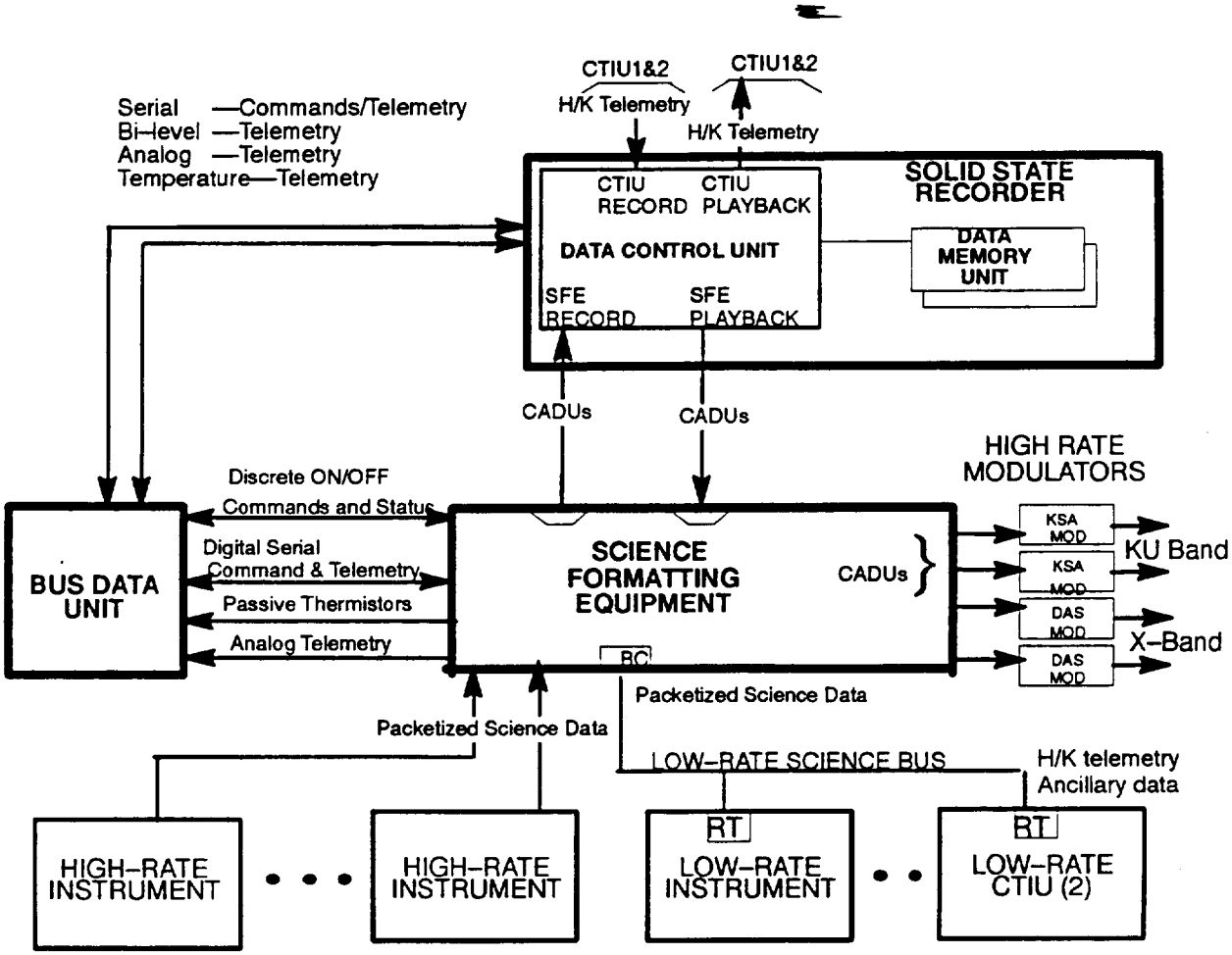

Figure 54. SFE and SSR Interface Block Diagram

Table XV. Science Data Links

Return Link Service	Data Type		Data Rate (Maximum Allowable)		Usage
	Chan 1	Chan 2	Chan 1	Chan 2	
TDRSS KSA	P/B		150 Mbps		Playback Science Data Downlink
TDRSS KSA		R/T	150 Mbps		Real-time Science Data Downlink
DB (X–band)	R/T		12.5 Mbps		Real-Time Direct Broadcast (DB) (Not Simultaneous with Direct Playback)
DB & DDL (X–band)	R/T	R/T	12.5 Mbps	105 Mbps	Real-Time DB and Direct Downlink (DDL) (Not Simultaneous with Direct Playback)
DB & DP2 (X–band)	R/T	P/B	12.5 Mbps	105 Mbps	Real-Time DB and Direct Playback (DP2) (Not Simultaneous with Direct Playback DP1)
DP1 (X–band)		P/B		150 Mbps	Direct Playback (DP1) (Not Simultaneous With DB or DDL)

The Low–Rate Science (LRS) bus is a redundant serial data bus using a Digital Time Division Command/Response Multiplex Data Bus (MIL-STD-1553B) protocol, which supports single and multi–word data transfers. Any Instrument with less than 100 kbps of science data uses this interface for transmission of their science data. The SFE, as the LRS bus controller, communicates via the C&T bus with the (a)standby CTIU and active CTIU, (b) Low–Rate Instruments [MOPITT, CERES–1, CERES–2], and (c) test port. The aggregate of all data received through the LRS bus is multiplexed together and allocated to a single downlink virtual channel using the CCSDS defined Standard Service.

11.3.5 Solid State Recorder

The Solid State Recorder (SSR) is a data storage device in the C&DHS. The SSR stores 140 Gbits of data storage of which 384 Mbits (2–orbits) are allocated to H/K telemetry for playback via the S–band transponder and the remainder is reserved for science data. The SSR is capable of simultaneously recording and playing back Spacecraft science data via an interface with the SFE. Concurrently, the SSR is capable of recording or playing back H/K telemetry data via an interface with the CTIU. The SFE and CTIU interfaces operate independently of each other. The SSR architecture is single-fault tolerant.

The SSR consists of two identical, redundant Data Controller Units (DCUs), and two identical Data Memory Units (DMUs). The complete mass memory capability is provided by the Data Memory Unit(s) plus the local memory contained within the Data Controller Units. User capacity can be added by increasing the number of Data Memory Units or increasing the density of storage within the DMUs. In operation, only one of the Data Controller Units is active at a given time and it supplies power to the Data Memory Unit(s). The DCU contains the record/playback data processing, command and telemetry processing and power generation circuitry.

The full capacity of the SSR can be reached through one continuous recording or through a process of several consecutive recording sessions. Full capacity need not be met prior to playback of recorded data and the SSR is capable of playing back all or a selected segment of stored data.

The science data CADUs directed to the SSR by the SFE have the same format as the ones directed to the modulators in real–time with the exception that the Replay Flag bit in the VCDU primary header is set to "1". Consequently, the Reed–Solomon check symbols that follow the VCDU data unit zone is different between a CADU directed to the recorder and a modulator. There are two record interfaces, one to each of the SSR controllers. However, only one side is active at a time. The SSR is capable of recording four simultaneous data streams from the SFE at a data stream rate of 37.5 Mbps, corresponding to an aggregate data rate of 150 Mbps. The SSR is also capable of playing back four simultaneous data streams to the SFE at a clock rate for a channel which can be either 18.75 Mbps or 37.5 Mbps to a maximum aggregate data rate of 75 or 150 Mbps, as determined by the data clock supplied by the SFE. A playback session is initiated by either the SCC–based FSWS or ground controller command.

The SSR is capable of sorting and recording Spacecraft Science Data in separate logical data buffers according to the source of the data. This capability provides for selective playback of this data. The SSR is also capable of recording and playing back real-time, continuous Spacecraft Housekeeping (H/K) Telemetry data via cross-strapped interfaces to each one of the Spacecraft CTIUs. A telemetry input data rate of 16 kbps is supported. The SSR plays back stored telemetry data at a commanded rate of 256 or 512 kbps.

(This page intentionally left blank.)

12 COMMUNICATIONS SUBSYSTEM (COMMS)

12.1 Communications Links and Link Parameters

Communications subsystem links between the EOS Spacecraft and external elements are shown in Figure 55. The links satisfy the functional requirements for high–rate science data downlink, Spacecraft engineering data downlink, command and control uplink, and navigation support.

The communication links utilize several services of the TDRSS:

a. KSA return service for science data downlink,

b. SSA and SMA return service for engineering downlink,

c. SSA and SMA forward service for commands and

d. SSA and SMA forward service for autonomous navigation.

In addition, the communications subsystem supports a direct to user science data downlink, direct access services (DAS), and a ground network (GN) link can be established to support emergency operations.

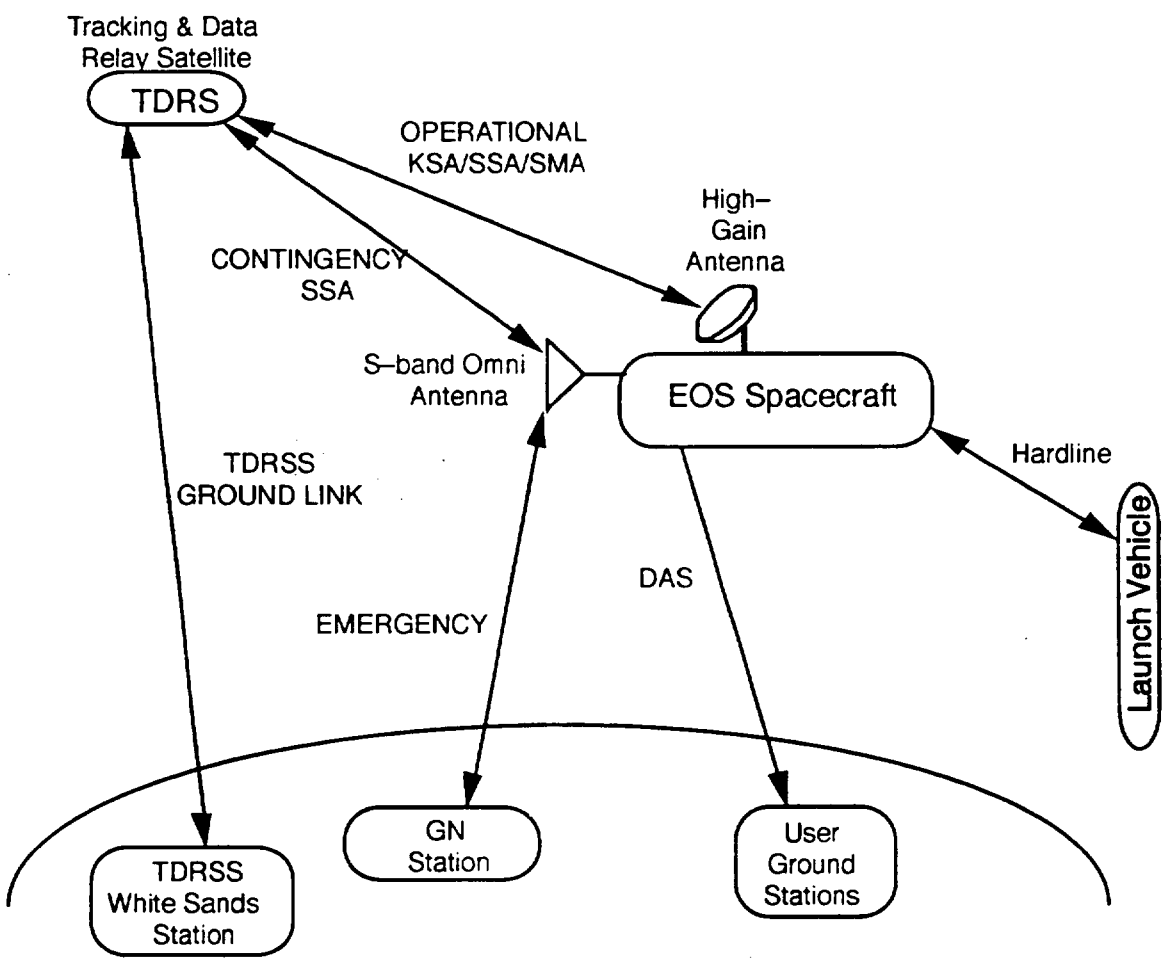

Figure 55. Communications Subsystem: Links

12.2 Communication Link Functional Allocations

The data rates available for the commanding and/or other forward-link functions are given in Table XVI for the various link paths and services.

Table XVI. Forward (Command) Links

Forward Link Service	Link	Antenna	Data Rate (Minimum Required)	Usage
TDRSS SMA	1	HGA (LHC)	1 kbps	Low-Rate Commands, Contingency
TDRSS SSA	3	HGA (LHC/RHC)	10 kbps	High-Rate Commands Normal Mode
TDRSS SSA	5	Omni (RHC)	125 bps	Contingency Commanding
DSN/GN/WTS S-Band	9	Omni (RHC)	2 kbps	Emergency Commanding
Hard-Line	—	Umbilical	2 kbps	Commands from GSE (Pre-Launch)

Notes:
1. A Contingency is defined as a non-normal operational condition such as the need to command the Spacecraft during non-SA contact periods, or as the need to reconfigure the Spacecraft using the S-band Omni antennas.
2. An Emergency is defined as a non-normal operational condition which forces the use of the GN instead of any TDRS.

Backup ranging is available only on the TDRSS S-band. One-way return (Doppler only) tracking is supported in the S-band transponder by use of the master oscillator (MO). Two-way ranging (range and range-rate) is possible with the coherent operation of the SSA link. The hard-line launch vehicle interface is used for prelaunch checkout and system configuration.

The return-link allocations of functions and data rates are given in Table XVII for the TDRSS, GN, and DAS.

The KSA link supports high-rate science data playback, while the S-band link supports housekeeping telemetry. Simultaneous real-time telemetry and computer or low-rate recorder dump is possible on the TDRSS S-band links, using the high gain antenna (HGA). The HGA is shown in Figure 56.

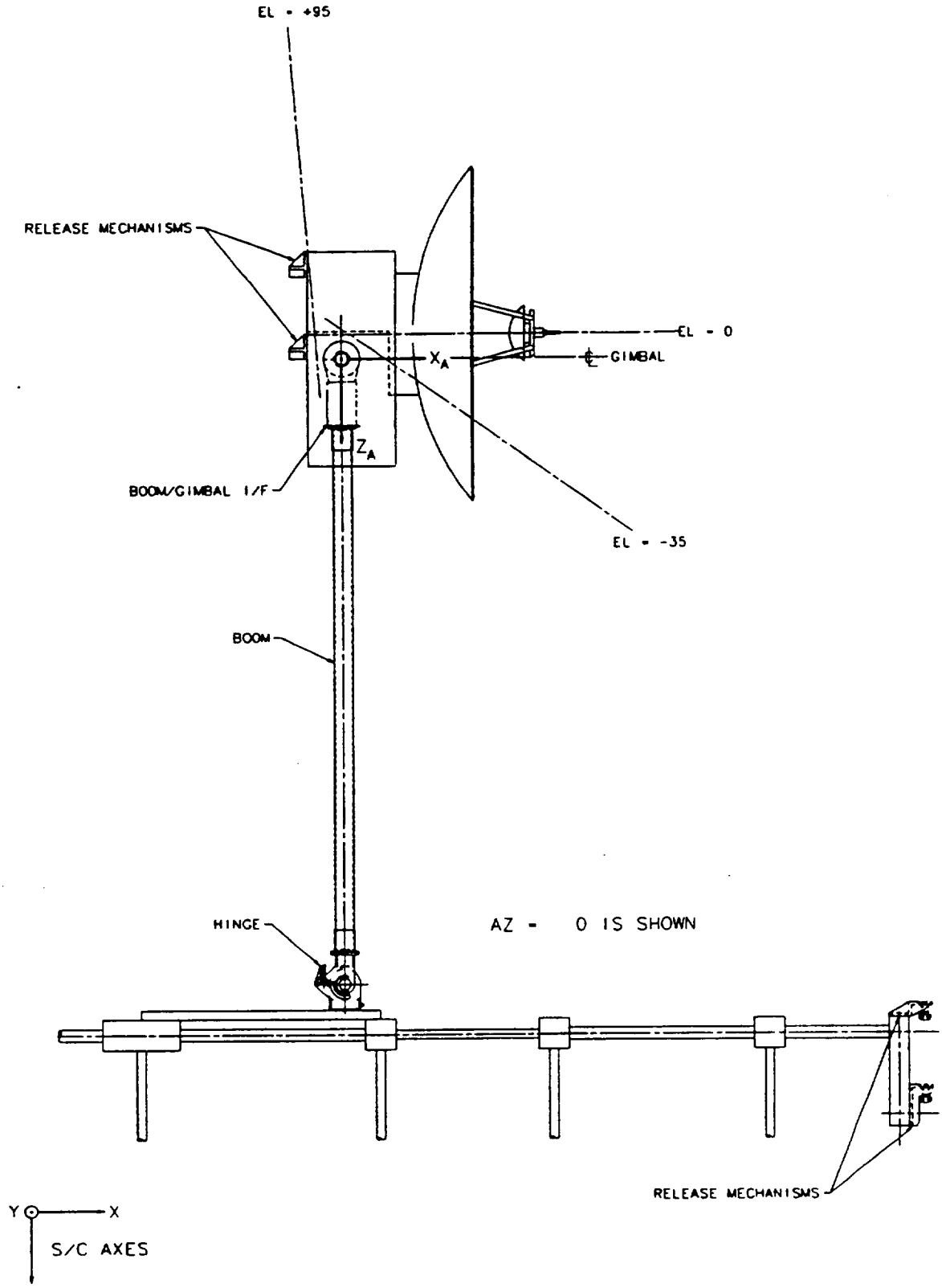

Figure 56. High Gain Antenna

Table XVII. EOS Return Link Telemetry, Science and Tracking Modes

Mode	Link	Service	Data Mode	Rate	Antenna	Mod.	Tracking (3)	PN Code
TDRSS Normal	2A	TDRS-SMA DG1, M1,2	Real-Time H/K Real-Time H/K	16 kbps (4) 16 kbps	HGA (LHC)	SQPN (6)	range/ Doppler	On
TDRSS Normal	2B	TDRS-SMA DG1, M1,2	Real-Time H/K Diagnostic	16 kbps (4) 16 kbps	HGA (LHC)	SQPN (6)	range/ Doppler	On
TDRSS Normal	4A	TDRS-SSA DG1, M1,2	Real-Time H/K Real-Time H/K	16 kbps 16 kbps	HGA (LHC/RHC)	SQPN (6)	range/ Doppler	On
	4B	TDRS-SSA DG1, M1,2	Real-Time H/K Diagnostic	16 kbps 16 kbps	HGA (LHC/RHC)	SQPN (6)	range/ Doppler	On
	4C	TDRS-SSA DG1, M3	Real-Time H/K Playback H/K	16 kbps 256 kbps(7)	HGA (LHC/RHC)	QPSK (6)	range/ Doppler	On, I Ch
TDRSS Contingency	6A	TDRS-SSA DG1, M1,2	Real-Time H&S Real-Time H&S	1 kbps (4) 1 kbps	Omni (RHC)	SQPN (6)	range/ Doppler	On
	6B	TDRS-SSA DG1, M1,2	Real-Time H&S Diagnostic	1 kbps (4) 1 kbps	Omni (RHC)	QPSK (6)	range/ Doppler	On
TDRSS Normal	8A	TDRS-KSA DG2	Playback Sci. (5) Playback Sci.	75 Mbps 75 Mbps	HGA (LHC/RHC)	SQPSK	no	Off
	8C	TDRS–KSA DG2	Real–Time Sci.(5) Real–Time Sci.	75 Mbps 75 Mbps	HGA (LHC/RHC)	SQPSK	no	Off
Emergency	10A	DSN/GN/ WPS	Real-Time H/K	16 kbps	Omni (RHC)	(1)	Doppler	Off
	10B	DSN/GN/ WPS	Real-Time H/K Diagnostic	16 kbps 16 kbps	Omni (RHC)	(2)	Doppler	Off
	10C	DSN/GN/ WPS	Real-Time H/K Playback H/K	16 kbps 512 kbps	Omni (RHC)	(2)	Doppler	Off
	10D	DSN/GN/ WPS	Real-Time H&S	1 kbps	Omni (RHC)	(1)	Doppler	Off
	10E	DSN/GN/ WPS	Real-Time H&S Diagnostic	1 kbps 1 kbps	Omni (RHC)	(2)	Doppler	Off
DAS	12A	DAS DB	Real–Time Sci. Real–Time Sci.	12.5 Mbps 12.5 Mbps	DAS (RHC)	SQPSK	N/A	N/A
	12B	DAS DB'	Real–Time Sci. Real–Time Sci.	12.5 Mbps 12.5 Mbps	DAS (RHC)	SQPSK(6)	N/A	N/A
	14A	DAS DB/ DDL	Real–Time Sci. Real–Time Sci.	12.5 Mbps 105 Mbps	DAS (RHC)	SQPSK	N/A	N/A
	16A	DAS DP1	Playback Sci. (5) Playback Sci.	75 Mbps 75 Mbps	DAS (RHC)	SQPSK	N/A	N/A
	18A	DAS DB/ DP2	Playback Sci. (5) Playback Sci.	12.5 Mbps 105 Mbps	DAS (RHC)	SQPSK	N/A	N/A

Notes:

1. Modulation is PSK on 1.024 MHz subcarrier.
2. Modulation is PSK on 1.024 MHz subcarrier and PM on carrier.
3. There is no range or Doppler tracking for Mode 2 (M2) operations.
4. There is no CEI requirement to process the I channel.
5. The I and Q data on links 8A and 8C originate from a single data source.
6. The Q/I power ratio is 4:1.
7. Interleaving of convolutional encoder signals.

12.3 Communications Services

The communications subsystem supports the EOS Spacecraft housekeeping functions by providing command reception, telemetry transmission and navigation services. Transmission of telemetry and reception of commands will be primarily supported through the Tracking and Data Relay Satellite System (TDRSS). If the TDRSS becomes unavailable, backup command and telemetry functions will be accommodated through the use of the GN. Primary navigation functions will be supported via the use of the TDRSS onboard navigation system (TONS). Should TONS support become unavailable, then the TDRSS based S–band tracking support function will be utilized as the backup navigation source. Direct downlink services will also be included which will provide direct to user science data and also act as a backup to the TDRSS science data return link function. The communications subsystem will support an interface for command functions through the launch vehicle umbilical for prelaunch checkout.

To accommodate the above objectives, the communications subsystem will include Ku–band, X–band and S–band equipment. A block diagram of the communications subsystem is given in Figure 57.

The Ku–band equipment will provide the following functions:

a. Modulate and transmit one single 150 Mbps data channel via the TDRSS KSA telemetry Return link.

b. Provide open loop pointing of the HGA in response to commands from the C&DH subsystem.

The S–band equipment will provide the following functions:

a. Receive and demodulate the SSA and SMA Forward link signals transmitted by the TDRSS including the ranging channel.

b. Provide for S–band two way turn–around ranging as well as one way Doppler tracking functions compatible with the TDRSS.

c. Modulate and transmit baseband telemetry data on the TDRSS SSA and SMA Return links.

d. Receive and demodulate the GN command uplink signals excluding the ranging channel.

e. Modulate and transmit baseband telemetry data on the GN telemetry downlink.

f. Perform Doppler extraction on the TDRSS forward link and time tag the data for processing by the C&DH subsystem.

g. Detect the PN code epoch on the TDRSS forward link and time tag the event for Spacecraft clock calibration processing by the C&DH subsystem.

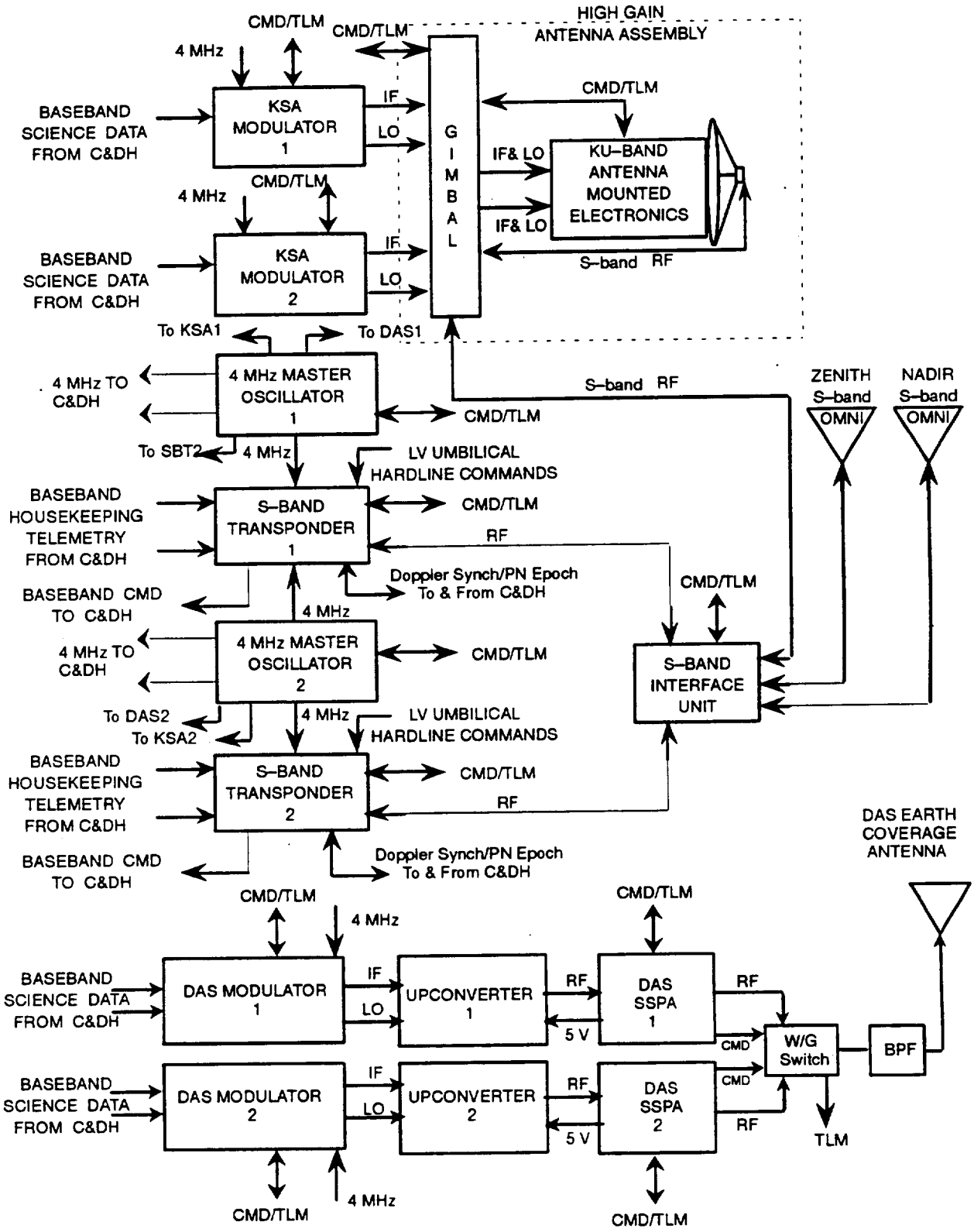

Figure 57. Communications Subsystem Block Diagram

12.3.1 Command Uplink Services

The primary on–orbit command uplink path will be via the TDRSS SSA service with GN services available as an emergency backup. Normally, two 10 minute SA contacts will be scheduled where a 10 kbps forward link will be established for command uplink. Use of the TDRSS MA service is not operationally required but will not be excluded by the hardware design other than the constraint of a 1 kbps forward link rate due to the MA signal from TDRSS being a factor of 10 weaker (–10 dB) than the SSA signal. The contingency command uplink path will also be via the TDRSS SSA service. The maximum forward link rate is 125 bps due to the use of omni antennas. The emergency command uplink path will be via GN service. The standard GN command uplink rate is 2 kbps. Command reception capability will also be provided via the launch vehicle umbilical for prelaunch checkout.

12.3.2 Housekeeping Telemetry Downlink Services

The primary on–orbit housekeeping telemetry path will be via the TDRSS SA Return Service with GN Services available as an emergency backup. Operationally the real–time 16 kbps housekeeping telemetry will be downlinked via the HGA during the normal 20 minute SSA service. In a diagnostic mode the real–time data can be transmitted via one data channel with SCC dump or telemetry recorder playback on the other channel via the HGA. During periods when the HGA is not available telemetry will be downlinked using the TDRSS SSA service via one of the Omni antennas. A 1 kbps channel rate is available which will predominantly be used for real–time health and safety telemetry but could be used for limited SCC dump data. Emergency backup using GN is also available with rates as shown in Table XVII. These link configurations are the same as the TDRSS SSA normal link configurations with the exception of the higher rate available for the telemetry recorder playback.

12.3.3 Navigation Services

Autonomous navigation is performed using the TONS. The required Doppler extraction function in the S–band transponder provides time tagged Doppler data to the TONS navigation software residing in the Spacecraft control computer which performs the onboard orbit determination. Onboard time is calibrated using the time tagged PN code epoch signal from the transponder which is routed to ground support systems. S–band ranging using the S–band transponder is provided as a backup to the TONS navigation.

12.4 Science Data Services

The communications subsystem supports the EOS Spacecraft science data services by providing encoding, modulation and transmission functions.

The primary science data return path will be supported via TDRSS KSA service. A supplement to the TDRSS/EOS DIS capabilities is provided via the DAS which provides users with rapid access to real time science data. The DAS also provides a direct playback service which acts as a rudimentary TDRSS/HGA backup to provide an interface for remote relay of playback science data.

12.4.1 TDRSS Ku-band Single Access (KSA) Services

The science data return link via the TDRSS KSA service will utilize a high gain antenna and high-rate modulator. High-rate data will be received from the C&DH subsystem and differentially encoded, convolutionally encoded, then QPSK modulated on an IF signal by the high-rate modulator. The IF signal will then be upconverted, amplified and radiated by the HGA. An average of 20 minutes of TDRSS KSA service is required per orbit for normal mission operations. Constraints on missed KSA contacts due to TDRSS scheduling have been identified but do not affect the communications subsystem design except in the case of peak operating duty cycle (thermal design) of the HGA.

12.4.2 Direct Access System (DAS)

The DAS will provide real time transmission of science data from selected instruments on the EOS Spacecraft to user ground stations. The system will permit users to receive regional data from a subset of instruments on-board the Spacecraft via two types of services, direct broadcast (DB) and direct downlink (DDL). The DB service will accommodate selected low-rate instruments in a continuously available service. The DDL service will accommodate real-time data from ASTER. The DDL service will be a scheduled service available to the users with prior knowledge of ground station contact times. An additional service, direct playback, will provide a rudimentary backup to the TDRSS KSA return path in the event of TDRSS non-availability or an HGA catastrophic failure.

12.4.2.1 Direct Broadcast Service

The DB service will be designed for continuous operation at 12.5 Mbps. It will include data from selected instruments. This service may be momentarily interrupted by the initiation of the DDL service.

12.4.2.2 Direct Downlink Service

The DDL service will provide a scheduled contact operation at a rate of 105 Mbps. It will include data from ASTER. Operation of DDL or DP precludes operation of the other service (mutually exclusive).

12.4.2.3 Direct Playback Service

The DP service will provide a scheduled contact operation at a rate of 150 Mbps or 105 Mbps. It will include high-rate recorder playback of science data. The 150 Mbps service is exclusive of the DDL and DB service. The 105 Mbps service is exclusive of the DDL service.

12.5 DAS Requirements/Assumptions

The DAS provides the capability to transmit real-time science data from the EOS Spacecraft directly to the ground for individual use by the scientific community. It will transmit an X-band downlink frequency to the designated ground terminals situated in various locations around the Earth. The frequency will be selected to utilize the Earth Exploration Satellite frequency band for space to earth which spans from 8025 MHz to 8400 MHz. Table XVIII lists the DAS requirements and assumptions.

Table XVIII. DAS Requirements/Assumptions

Frequency Band:	8.025 to 8.4 GHz	8.025 to 8.4 GHz	8.025 to 8.4 GHz	8.025 to 8.4 GHz
Service:	Direct Broadcast (Continuous):	Direct Downlink (Scheduled):	Direct Playback 1 (Backup):	Direct Playback 2 (Backup):
Data Rate:	12.5 Mbps	105 Mbps	150 Mbps	105 Mbps
Channel BER: (less Reed Solomon)	1x10–5	1x10–5	1x10–5	1x10–5
Assumed Coding:	Convolutional on all services	Convolutional on all services	Convolutional on all services	Convolutional on all services
Margin (Goal):	3 dB	3 dB	3 dB	3 dB
Ground Station Assumptions:				
Antenna Diameter:	10 meters or 3 meters	10 meters	10 meters	10 meters
Minimum G/T:	32 dB/K or 23 dB/K	32 dB/K	32 dB/K	32 dB/K
Minimum Elevation Angle:	5 degrees	5 degrees	5 degrees	5 degrees

12.5.1 DAS Operations

The nominal mission operation of the DAS is expected to be with DB service always enabled and scheduled DDL service. In the event of a catastrophic failure of the primary science data return path using TDRSS KSA service, the DP1 service could be used. Operation in this mode will preclude the use of DDL and DB services. The DP2 lower rate service can be combined with DB service.

12.5.2 DAS Implementation

The key to a simplified hardware implementation is the allowance for a momentary interruption in DB service during the reconfiguration for DDL or DP2 service. This allows the DAS to reduce the design from a multiple frequency system as described in previous studies to a single frequency system.

Two data channels can be received from the C&DH subsystem. The data will be convolutionally encoded by the modulator and then QPSK modulated on an IF frequency. The modulated IF frequency will then be upconverted by the upconverter and amplified by the SSPA. The SSPA output will then drive the Earth coverage antenna which will radiate the signal to the ground stations. Redundant equipment will be provided as shown in Figure 57.

The RF portion of the DAS system is similar to the Landsat 4 and 5 direct downlink design. QPSK modulators will be used allowing two separate data channels to be transmitted simultaneously. When using the normal DB service the 12.5 Mbps data will be transmitted on both data channels

(I and Q). A normal 1:1 Q:I power ratio is backed up by a 4:1 ratio for contingency. The contingency ratio minimize the losses due to the power division between the two channels with only 1 dB degradation resulting. When DDL service is to be utilized, the data on the Q channel is changed from the 12.5 Mbps DB data to the 105 Mbps DDL data. This results in a DB user interruption during the changeover but equivalent DB service concurrent with the DDL operation. The DDL user will receive the Q channel for the ASTER data and will also be able to receive the DB data on the I channel. At the end of the DDL service period the 12.5 Mbps data will be restored on the Q channel. In a similar manner a lower rate DP service can be combined with the DB service as desired A summary of the data rates for each mode is included in Table XIX.

Table XIX. DAS Modulator Modes

Input Data Type and Max. Data Rate (Mbps)		Output Data Rate (Max. Allowable) (Mbps)		Usage
Channel 1	Channel 2	I	Q	
DB 12.5	N/A	12.5	12.5	Real–time Direct Broadcast (DB) of Low–rate Science Data (Not simultaneous with DDL or DP) Same data on I & Q. 1:1 Q/I ratio
DB 12.5	N/A	12.5	12.5	Real–time Direct Broadcast (DB) of Low–rate Science Data (Not simultaneous with DDL or DP) Same data on I & Q. 4:1 Q/I ratio
DB 12.5	DDL 105	12.5	105	Real-Time Direct Downlink (DDL) of High-rate Science Data and DB (Not Simultaneous with DP) 1:1 I/Q ratio
N/A	DP1 150	75	75	Direct Playback (DP) for Backup Science Data Downlink (Not Simultaneous With DB or DDL) 1:1 I/Q ratio
DB 12.5	DP2 105	12.5	105	Direct Playback (DP) for Backup Science Data Downlink and DB (Not Simultaneous With DDL) 1:1 I/Q ratio
N/A	N/A	75	75	Pseudorandom Bit Stream

13 GROUND SUPPORT EQUIPMENT (GSE)

Electrical and mechanical ground support equipment (EGSE and MGSE) provide functions required during integration, test, transportation, and launch site activities for the EOS–AM Spacecraft.

13.1 Electrical Ground Support Equipment Summary

The Electrical Ground Support Equipment (EGSE) is comprised of the Spacecraft Checkout Station (SCS), Equipment Module Special Test Equipment (EM STE), Propulsion Module (PM) STE, Spacecraft Interface Simulator (SIS), and Launch Support Equipment (LSE). The major EGSE systems are of modular design and can accommodate a wide range of hardware and test configurations. Most of the EGSE systems provide computer–driven test capability and automated or computer–assisted test data collection, reduction, summarization, analysis, and display.

The EM STE group is comprised of five different types of test stations for EMs and the PM, as described in subsequent paragraphs. These stations are computer–based and operate in a stand–alone configuration to provide the appropriate environment for functional testing of the particular EM or the PM. The stations may be interfaced to the SCS Test LAN for the purpose of downloading software or up–loading test data.

13.2 Mechanical Ground Support Equipment (MGSE) Summary

Various mechanical, electromechanical, and pneumatic–mechanical fixtures and equipment are used to support and manipulate the primary EOS–AM Spacecraft structure, with and without instruments and/or appendages, and throughout various stages of assembly and test.

Mechanical launch support equipment (LSE) is needed to manipulate the Spacecraft, its appendages, and instruments for the purpose of establishment of the launch configuration after shipment to the launch site. Ground transportation fixtures and containers are also provided to protect and transport the Spacecraft and its related equipment between the several prelaunch facilities.

Shipping containers are environment–controlled enclosures which provide the required protection for the Spacecraft, unattached units of flight hardware, and support equipment. The protection provided is appropriate for any combination of highway, rail, sea, and air transportation environment.

For those instruments using CPHTS coldplates for thermal control, ground support equipment will be provided to support Spacecraft integration and test. Flight coldplates will include separate cooling channels, capable of carrying a non–ammonia fluid and being connected to a GSE cooling system to achieve instrument thermal control for ground tests other than thermal performance tests. This system would be available for supporting instrument cooling when Spacecraft test orientations do not allow CPHTS operation in CPL or reflux mode.

Additional air–conditioned cooling capabilities will be provided to support housekeeping bus and Spacecraft testing in an ambient environment.

13.2.1 Unique Mechanical Ground Support Equipment

Table XX indicates the necessary mechanical ground support equipment required for Spacecraft integration, test, shipment, and launch site support. The following descriptions are for major equipment items which have reached the preliminary design stage.

Table XX. EOS MGSE List

Handling Fixtures	Test Fixtures
Three-Axis Positioner	**S/C Level Test**
Vertical Spacecraft Sling	Vertical Test Stand – Acoustic
Horizontal Spacecraft Sling	Horizontal Test Stand – T/V
S/C Aft MAGE Booster Adapter	Static Load Test Fixture
S/C to Shipping Cntr. Aft Adapter	Modal Test Fixture
S/C to Shipping Cntr Fwd. Adapter	Pyro Shock Fixture
	Mass Properties Adapter
Hskp. Equipment Module Lift Fixture	
Hskp. Eq. Mod. Holding and Assy. Fixt.	
	Deployment Test
S/A Dolly	HGA-Boom Air Pad and Support Struct.
S/A Installation Sling	HGA-Hinge Test Fixture
	S/A Pop and Catch
Propulsion Module Installation Fixture	S/A Hinge Test Fixture
Propulsion Module Handling Fixture	
Propulsion Module-MGSE Struct. Dummy	**Component Tests**
	Proof Test Equipment (TAP)
Booster Adapter Support Stand	Vib. Plate – Hskp. Equip. Module
Booster Adapter Lift Fixture	Vib. Plate – Black Boxes
Spacecraft Protective Cover/Soft	**T/V Support Equipment**
Prime Structure Shipping Container	Baffles
Spacecraft Assy. Shipping Container	Cold Plates
	Target Pallet
Reaction Wheel Handling Fixture	Cold Plate Supports
Battery Handling Fixture	SSU Support
HGA Handling Fixture	Chamber Penetration Plates
Leak Test Bag	

13.2.1.1 Spacecraft Three–Axis Positioner

The Three–Axis Positioner, shown in Figure 58, supports the Spacecraft during most phases of manufacture and Spacecraft level integration and test. The Spacecraft will be attached to the positioner table top at the booster adapter interface plane. In this configuration, the positioner is capable of rotating the Spacecraft ±360 degrees along the X axis (Spacecraft coordinate system) and from a horizontal orientation to a vertical orientation (0–90 degrees about the Y axis). The positioner allows unlimited access to all areas of the Spacecraft except for the Propulsion Module which is located in the aft bay of the Spacecraft.

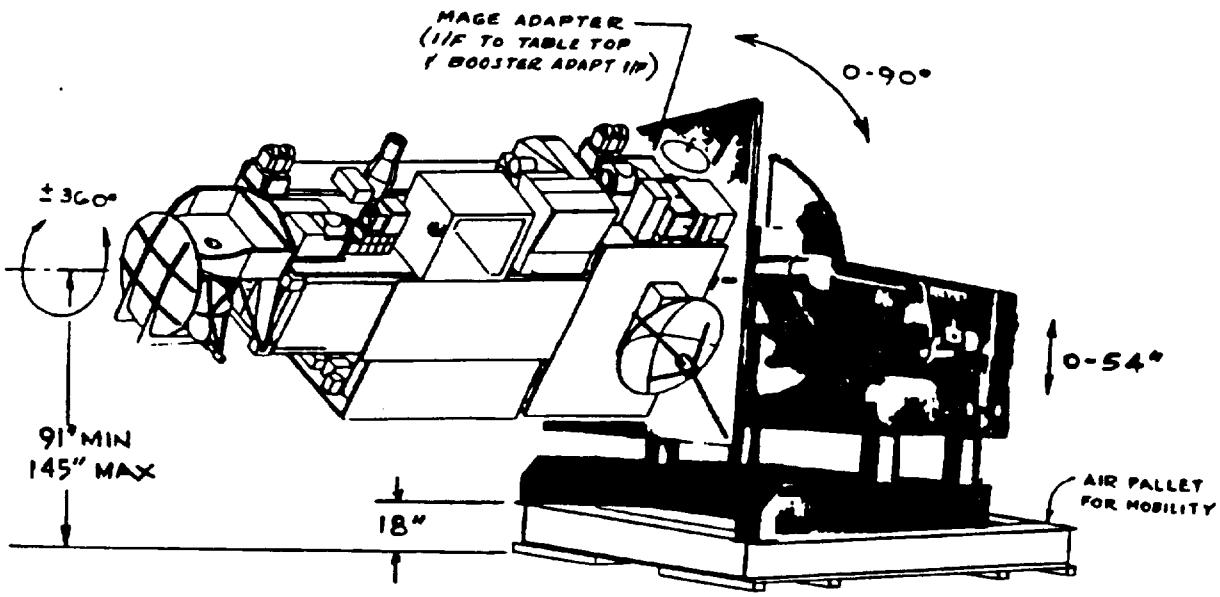

Figure 58. Spacecraft on Three–axis Positioner

13.2.1.2 Mechanical Aerospace Ground Equipment (MAGE) Adapter

The Aft–MAGE Adapter, shown in Figure 59, provides an interface between the Spacecraft booster interface nodes and the Three–Axis Positioner table top. The adapter will also be capable of interfacing with all other necessary ground support equipment designed to attach to the aft end of the Spacecraft. The adapter will allow installation of the Propulsion Module while attached to the Spacecraft.

13.2.1.3 Horizontal Test Stand

The Horizontal Test Stand (HTS), shown in Figure 60, supports the Spacecraft during thermal vacuum testing. The HTS will be modified to connect with the Aft–MAGE adapter and to provide a MAGE transfer ball support at a forward support node.

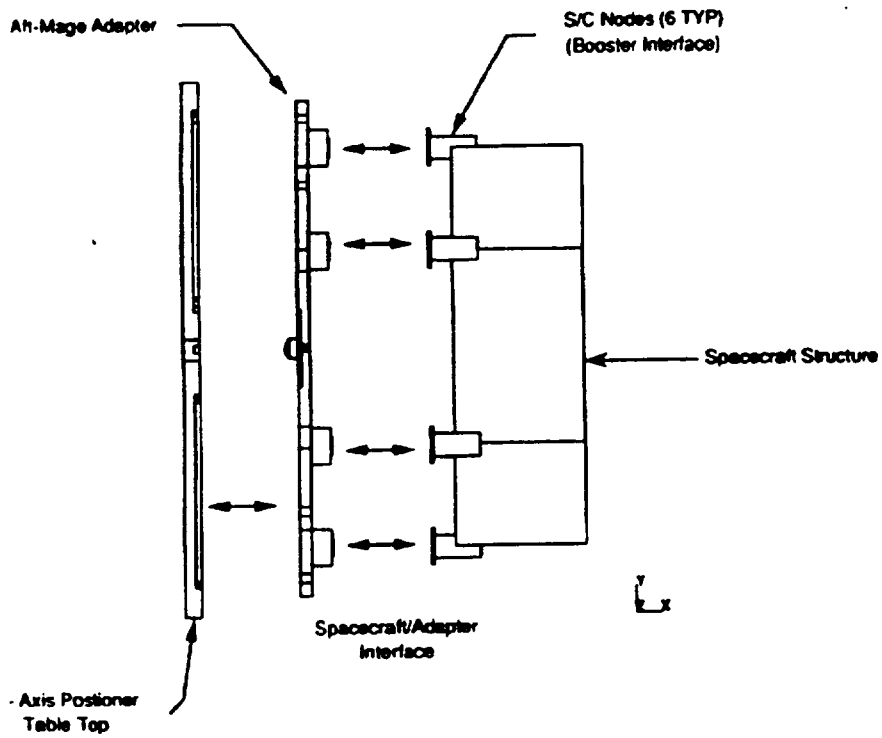

Figure 59. MAGE Adapter (Spacecraft Three–Axis Positioner)

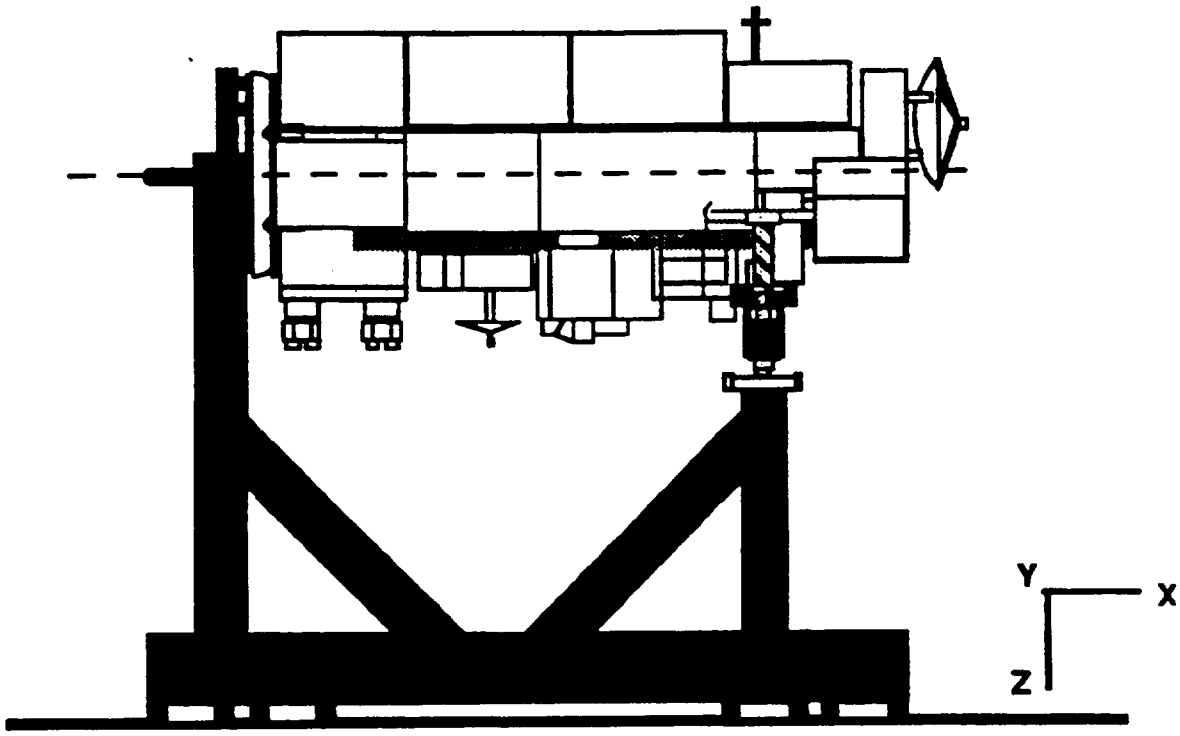

Figure 60. Horizontal Test Stand (HTS)

13.2.1.4 Spacecraft Horizontal Sling

The Spacecraft horizontal sling, shown in Figure 61, provides a means of lifting the Spacecraft in a horizontal orientation. The UARS "Spacecraft sling" shall be modified to accommodate the EOS configuration. The sling shall incorporate a counterweight and "turnbuckles" for Spacecraft leveling during all stages of Spacecraft lifting.

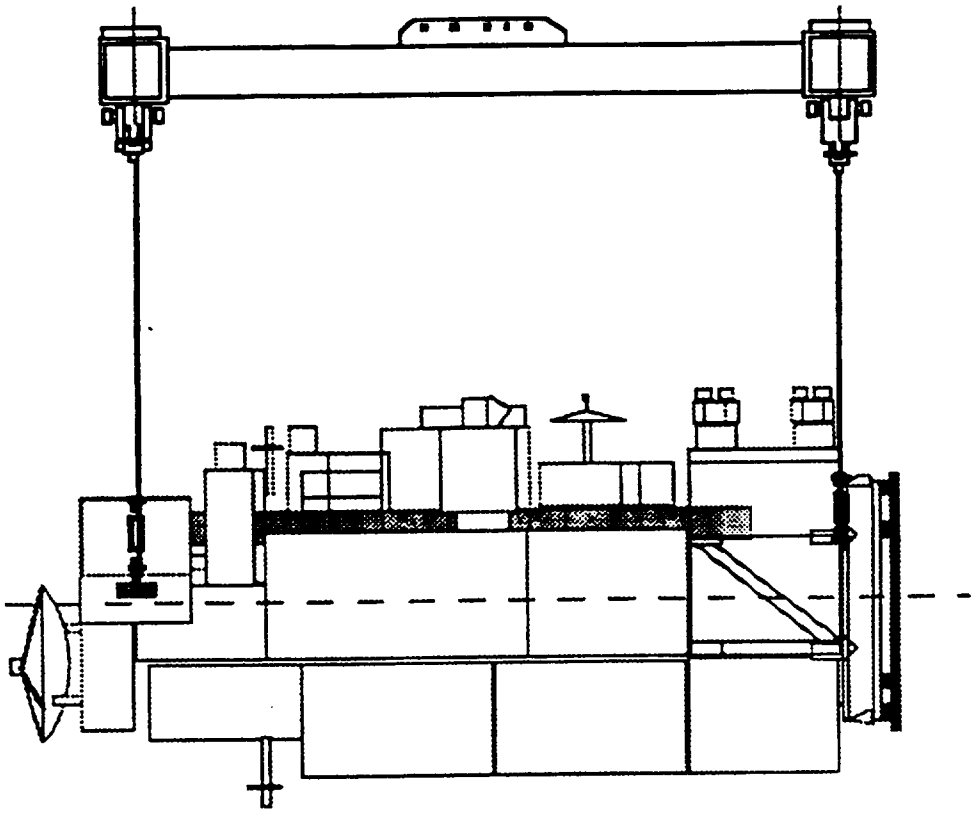

Figure 61. Spacecraft Horizontal Sling

13.2.1.5 Transportation Accommodation

The existing Gamma Ray Observatory (GRO) shipping container will be modified to accommodate the integrated EOS Spacecraft, as shown in Figure 62.

The container will support the Spacecraft in two locations; the booster interface plane and one of the forward node support points. The existing container trunnion support points (UARS location) will accommodate a transportation trunnion fixture which will attach directly to the Aft–MAGE adapter. The forward portion of the Spacecraft will be supported by using a MAGE transfer ball support design which helps eliminate loading of the Spacecraft due to container deformation.

The container will provide temperature and humidity control during all stages of transportation. The transportation design criteria appearing in Table XXI shall be applied to the transportation fixture design.

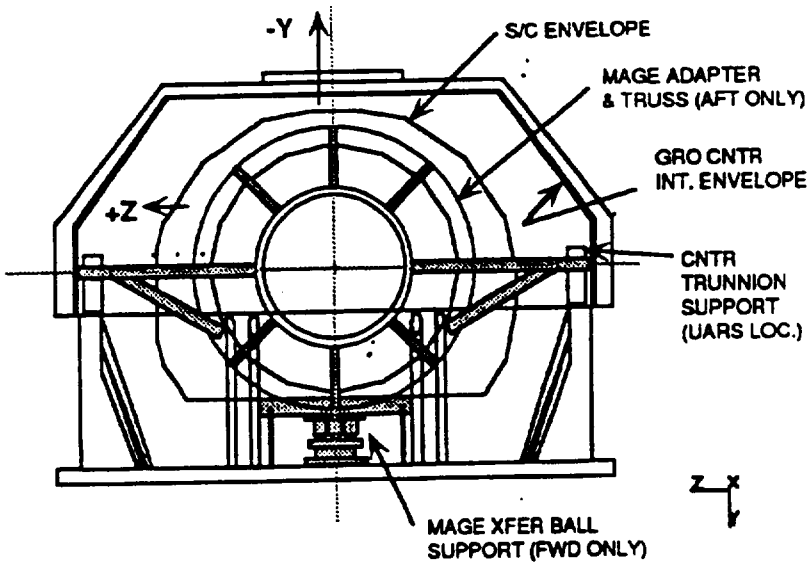

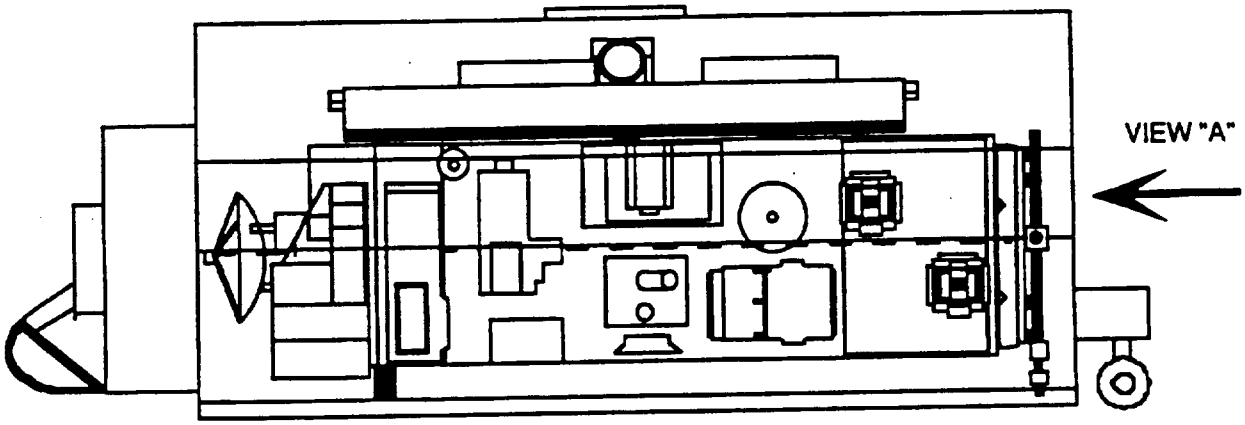

Figure 62. Spacecraft in GRO Container

Table XXI. MGSE Design Criteria

Design Condition	Dynamic Load Factors (G's)	Factors of Safety	
		Yield	Ultimate
Hoisting			
Applied in any direction within ±10 deg. of vertical	2.5 *	1.6	2.0
Transportation	**Applied Separately**		
Incl. truck, air, and sea Longitudinal (all)	±3.5 *	1.6	2.0
Vert. (air, air ride trailer, sea)	±3.0 *	1.6	2.0
Vert. (standard trailer)	±6.0 *	1.6	2.0
Lateral (truck and air)	±2.0 *	1.6	2.5
Lateral (sea)	±2.5 *	1.6	2.0
Transportation (in house)			
Vertical	±2.0	2.0	2.5
Lateral	±1.0	3.0	5.0
Static Fixtures			
Vertical	±1.25	3.75	6.25
Lateral	±1/25	3.75	6.25
* Ref: NASA SP–8077, "Transportation and Handling Loads"			

13.2.1.6 Propulsion Module Installation Fixture

The propulsion module installation fixture supports the propulsion module in a vertical orientation during propulsion module installation (see Figure 63). The Spacecraft, also in a vertical orientation, will be lowered over the Propulsion Module until it rests on the installation fixture, at which time the propulsion module can be moved into position for attachment to the Spacecraft structure. The installation fixture utilizes guide rods to ensure Spacecraft to propulsion module alignment during Spacecraft lowering.

13.2.1.7 Housekeeping Equipment Module Fixtures

Several frames will be used to stiffen individual equipment panels during panel buildup and equipment module assembly. Each equipment panel will be attached to such a "strongback" and placed on a turnover cart during equipment integration. Each "strongback" will include lift points and turnover cart interface trunnions.

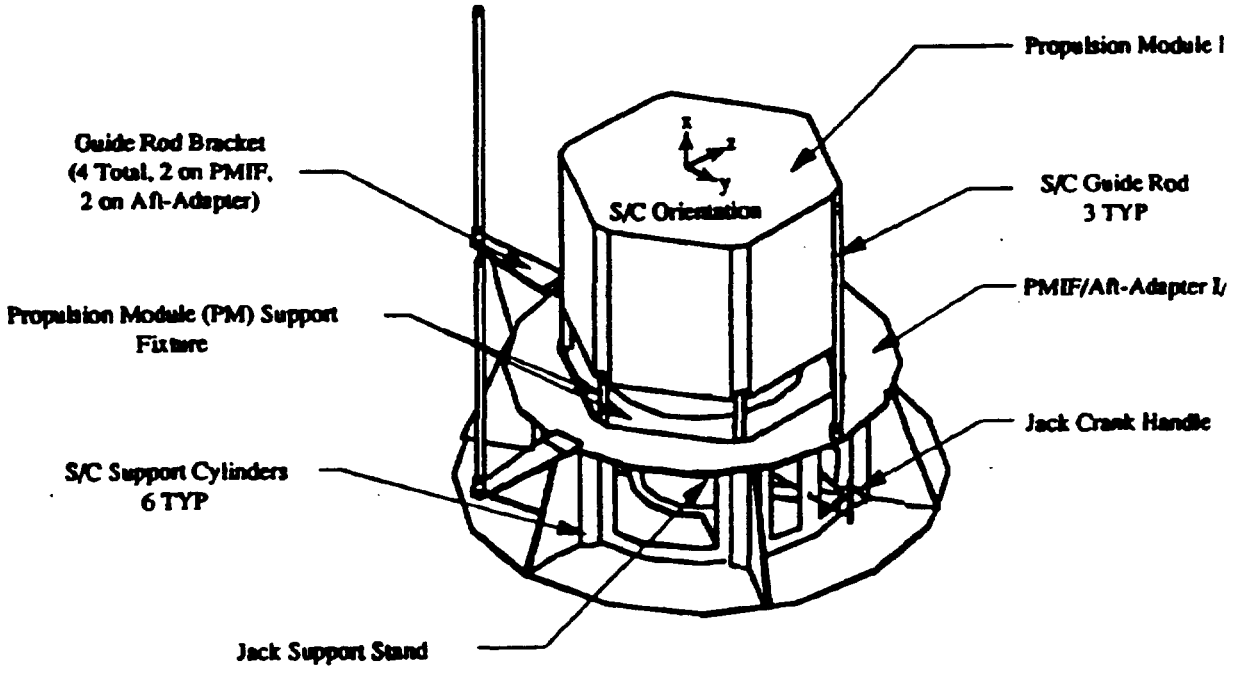

Figure 63. Propulsion Module Installation Fixture (Vertical Installation)

13.3 Spacecraft Checkout Station (SCS)

The SCS contains the majority of the Spacecraft–level test equipment, and is configured as shown in Figure 64. The SCS interfaces to the Spacecraft via the test port, solar array connectors, umbilical connection point, S–band omni antenna connections, high gain antenna connectors or HGA test connections, DAS antenna connections, and certain EM test connectors. The SCS provides command, telemetry, and science data handling services. The SCS also provides power to the Spacecraft dc bus and stimuli to the GN&C sensors. Comprehensive Spacecraft tests are supported once all EMs are installed.

The SCS computers and associated peripherals run support equipment software to operate and control the SCS and perform Spacecraft commanding and data collection, reduction, and display. Most of the microcomputers and associated real–time equipment, along with the station main computers, are located remotely from the Spacecraft. The computers communicate with each other via the Ethernet Test LAN, and with the other SCS equipment using various other point–to–point links.

13.4 Power Equipment Module Special Test Equipment (STE)

The power EM STE, as shown in Figure 65, provides for testing of the power regulation and control electronics and distribution circuits of a Power EM. Equipment is provided to completely test the functions of each of the two Battery Power Conditioners.

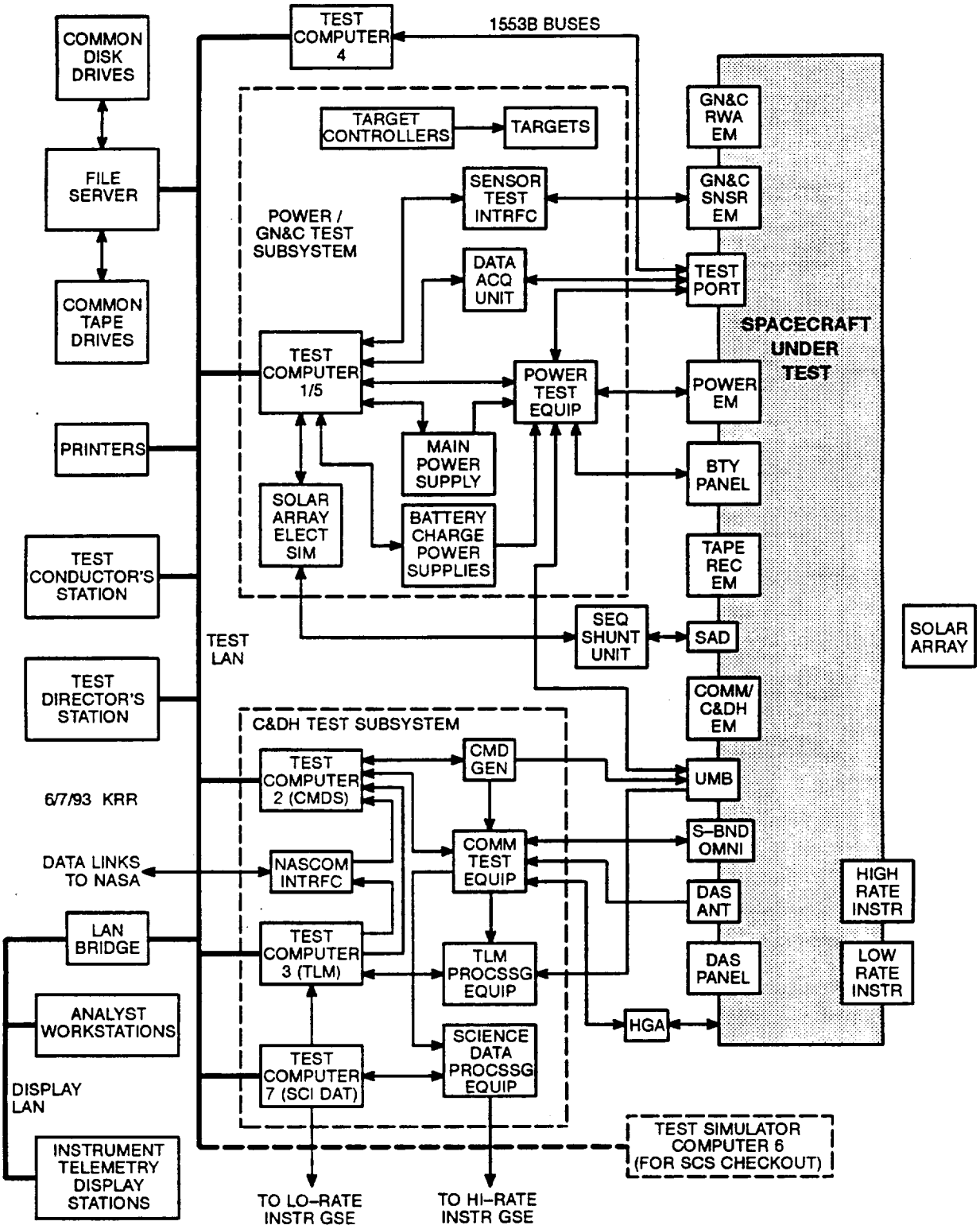

Figure 64. Spacecraft Checkout Station (SCS) Block Diagram

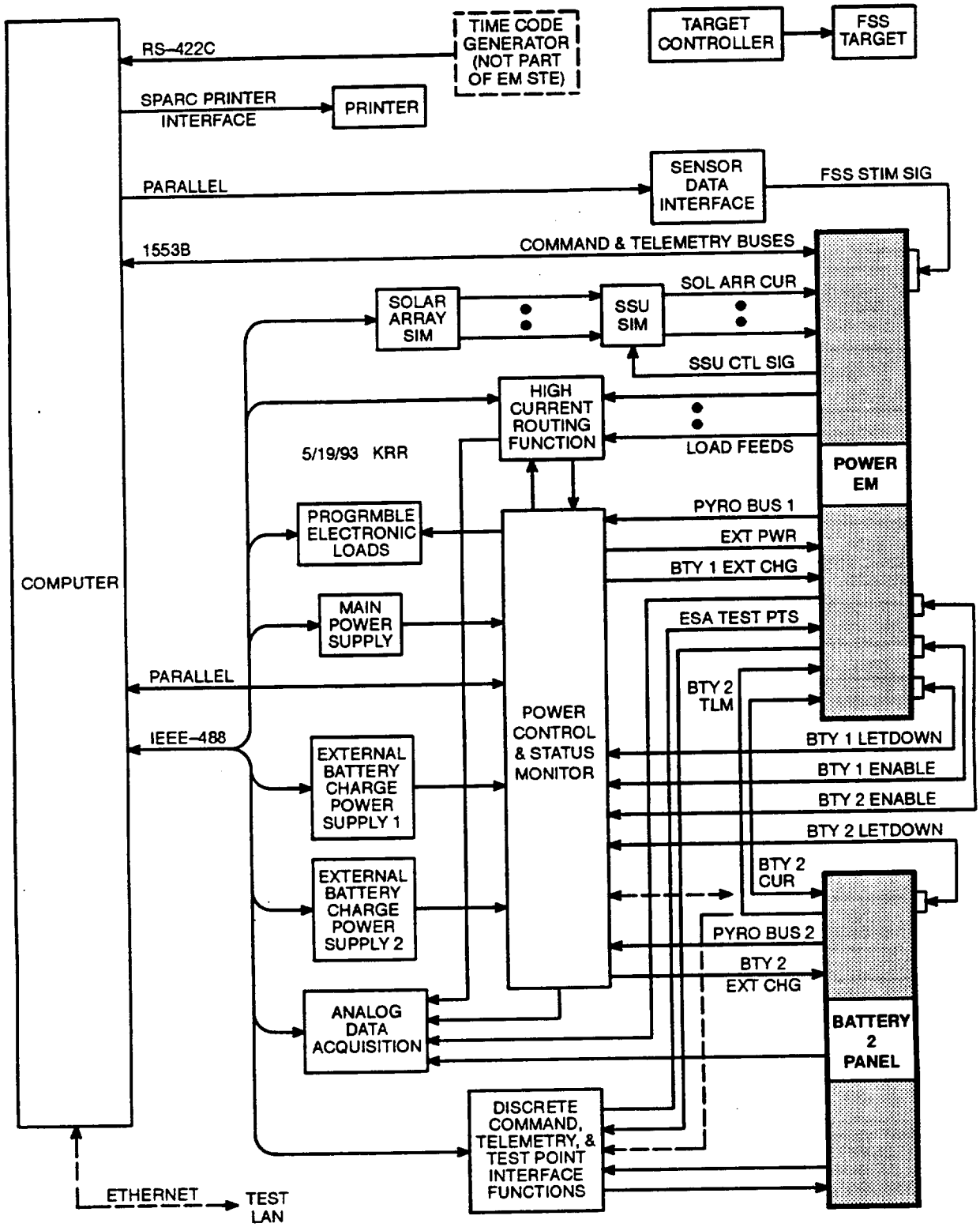

Figure 65. Power Equipment Module STE

The power EM STE provides the capability to test the battery 2 panel along with battery 1 normally resident in the Power EM. A power supply is provided for direct charging of each battery through the power EM's umbilical connection path.

Programmable electronic loads are provided for load testing of each of the fused power outputs from the EM.

13.5 Communications/C&DH Equipment Module Special Test Equipment

The COMM/C&DH EM STE, depicted in Figure 66, provides facilities for testing the command, telemetry, and S–band communications operations of the COMM/C&DH EM. The EM STE provides for full functional testing of the S–band command uplink, S–band telemetry downlink, and baseband data processing equipment in the EM.

Under control of the principal computer of the STE, a command message generator delivers data to either baseband umbilical connections of the EM or to inputs of the S–band upconversion equipment in the STE. In the case of r.f. command transmission the signal undergoes subsequent downconversion and processing in the EM under test.

A telemetry message simulator delivers data to the C&T bus inputs of the EM for formatting and upconversion to S–band. S–band downconversion equipment in the STE subsequently extracts the simulated telemetry data messages received from the EM. Means are also provided to test the baseband umbilical telemetry connections.

The principal computer of the STE receives housekeeping telemetry data, inserted by the EM under test onto the Low Rate Science Buses, and evaluates it for correct format.

Interfaces are provided by the STE to test the Time Mark and Frequency Bus outputs of the EM under test.

The COMM/C&DH EM STE includes r.f. test equipment which permits the measurement of basic parameters, such as signal level or frequency, of the S–band r.f. signals into and out of the EM.

13.6 Recorder/DAS EM Special Test Equipment

The recorder/direct access system (DAS) EM STE provides facilities for testing of the science data processing equipment, the Solid State Recorder, and the science downlink modulators as shown in Figure 67. This EM STE also provides facilities for separately testing the DAS EM.

The principal computer of the STE provides interfaces to the redundant MIL–STD–1553B C&T buses which carry the command and telemetry data traffic into and out of the EM under test.

A data generator simulates high rate instrument science data for processing by the C&DH subsystem. This data may be routed various ways, including record/playback sequences of the Solid State Recorder in the Recorder EM. Science data output from the Recorder EM destined for the K–band downlink is multiplexed into the modulation streams for the K–band Modulator, delivered from the EM under test at the K–band i.f., and is then demodulated by STE communications

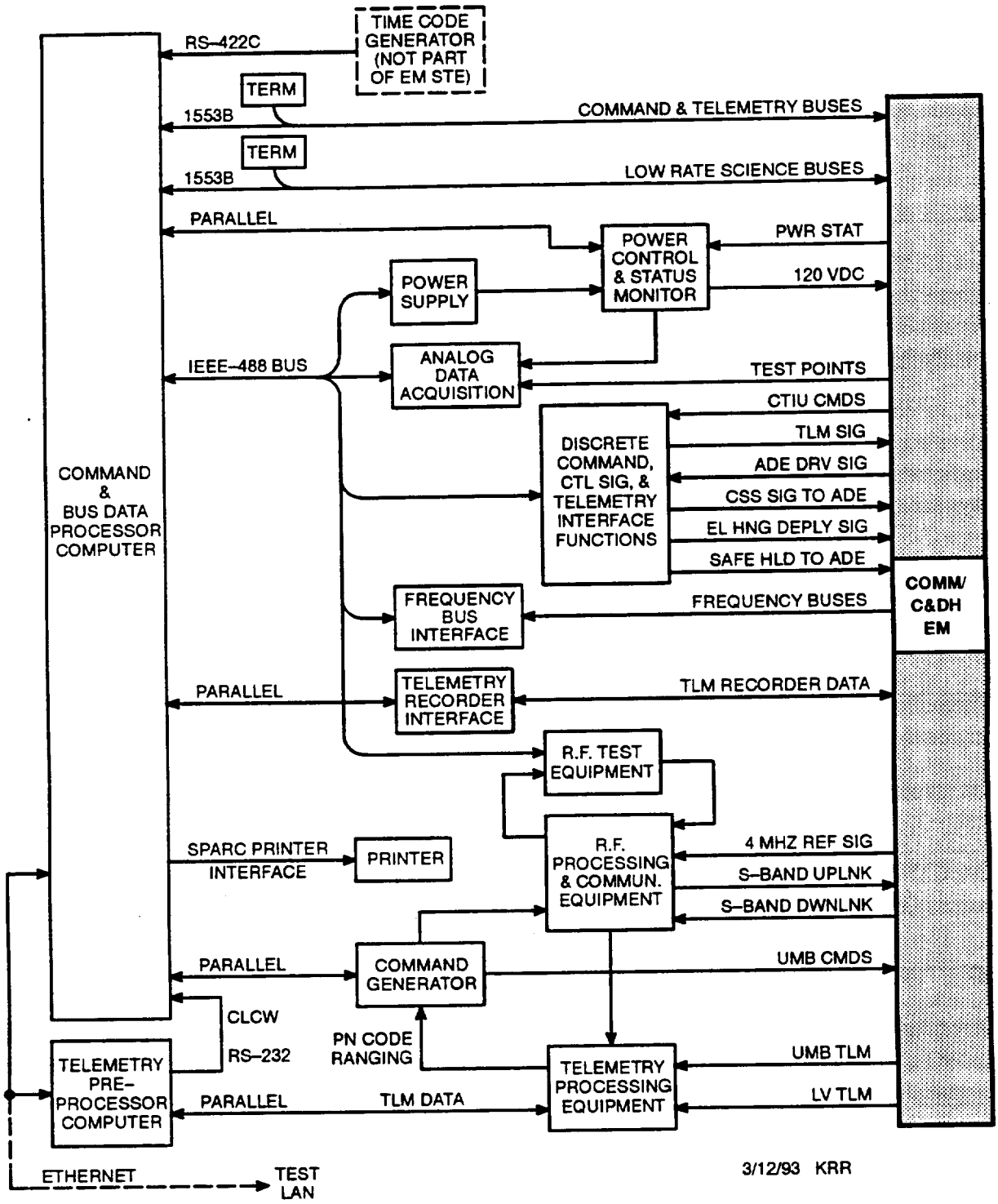

Figure 66. Comm/C&DH Equipment Module STE

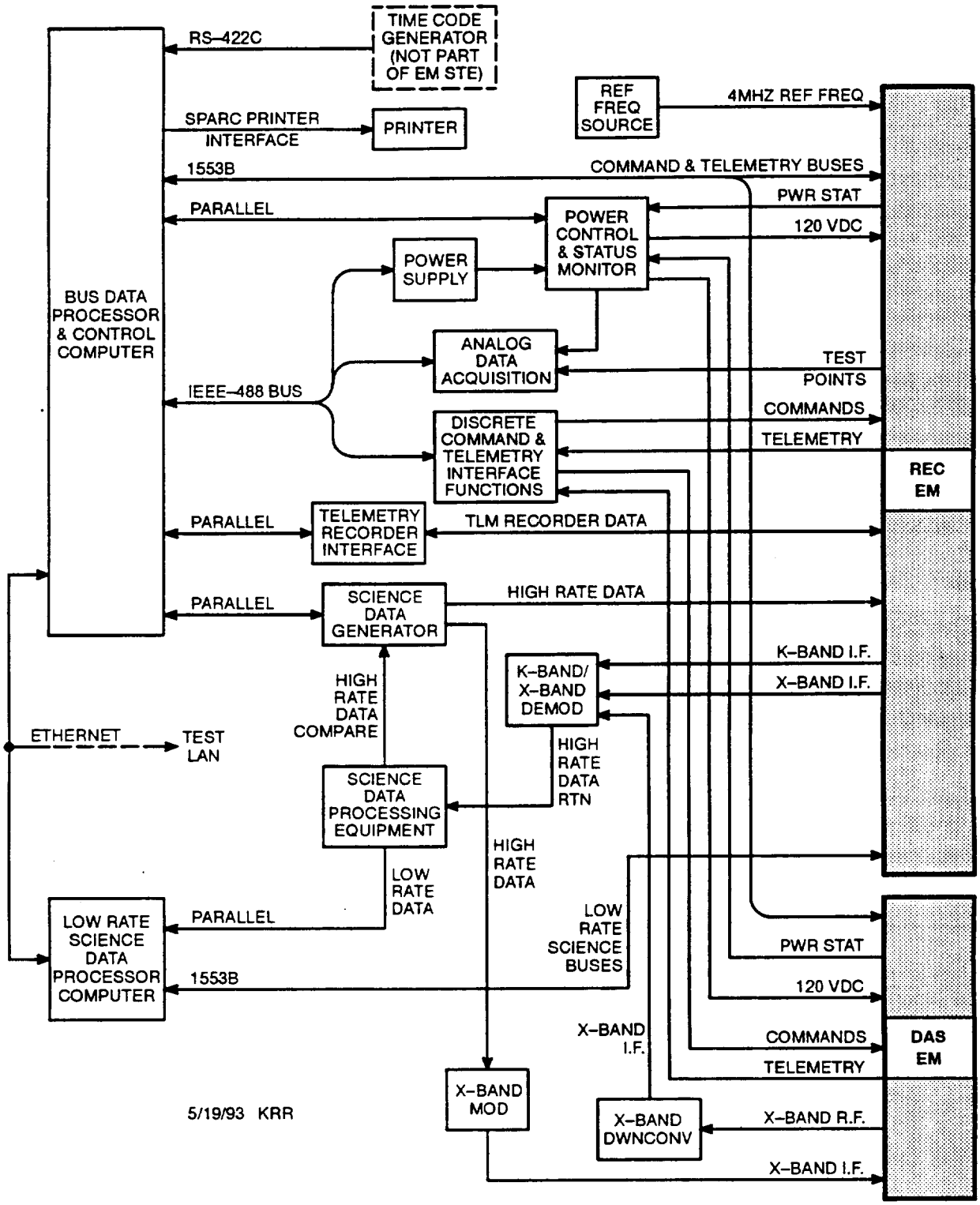

Figure 67. Recorder/DAS EM STE

equipment. The demodulated and separated high rate science data from the EM is routed back to the data generator for comparison with the data originally sent. Science data output from the recorder EM destined for the X–band downlink is similarly received at the X–band i.f., demodulated by the STE, and routed back to the data generator for comparison with the data originally sent.

A second dedicated microcomputer generates simulated low rate science data for injection into the recorder EM via the low–rate science bus. This science data is multiplexed into the modulation streams generated by the EM. Once received by the STE equipment, demodulated, and separated, the low rate science data from the EM is routed back to this microcomputer for comparison with the data originally sent.

The recorder/DAS EM STE also contains facilities for testing operation of the X–band upconversion equipment on the DAS EM. The high rate data generator and X–band modulator of the STE produce a modulated X–band i.f. for application to the DAS EM. The X–band output of the EM is downconverted in the STE to recover the baseband digital data, which is routed back to the data generator for comparison with the data originally sent.

The recorder/DAS EM STE includes r.f. test equipment which permits the measurement of basic parameters, such as signal level or frequency, of the X–band r.f. signals out of the DAS EM.

13.7 Guidance, Navigation, and Control Equipment Module Special Test Equipment

The GN&C EM STE, shown in Figure 68, provides facilities for testing of the GN&C sensor EM and reaction wheel assembly (RWA) EM. Test signals are provided to stimulate the various sensors. Simulated input signals from sources external to the Sensor EM are provided for the attitude control electronics (ACE) and ACE output signals to destinations external to the sensor EM are received and processed.

The GN&C EM STE will provide capabilities for initial stand–alone testing of the sensor EM or of the RWA EM, and will also accommodate interconnection of the Sensor EM and RWA EM in a combined test configuration.

13.8 Propulsion Module Special Test Equipment

The propulsion module STE, shown in Figure 69, will provide dc power and C&T bus interfaces to the PM. An attitude control electronics (ACE) simulator in the STE will deliver commands to the propulsion module electronics assembly (PMEA) in the PM via a serial data link. The PM STE includes capabilities for simulating certain PM components which may not be present in the PM during initial testing.

13.9 Spacecraft Interface Simulator (SIS)

The SIS is used at the various facilities where EOS Spacecraft instruments are developed to verify the compatibility of the electrical interfaces between the instrument and the Spacecraft bus. The electrical interfaces include Spacecraft power simulation, low–rate science bus and high–rate data link connections, and command and telemetry services. The SIS is designed for transportability between Martin Marietta and instrument developer locations.

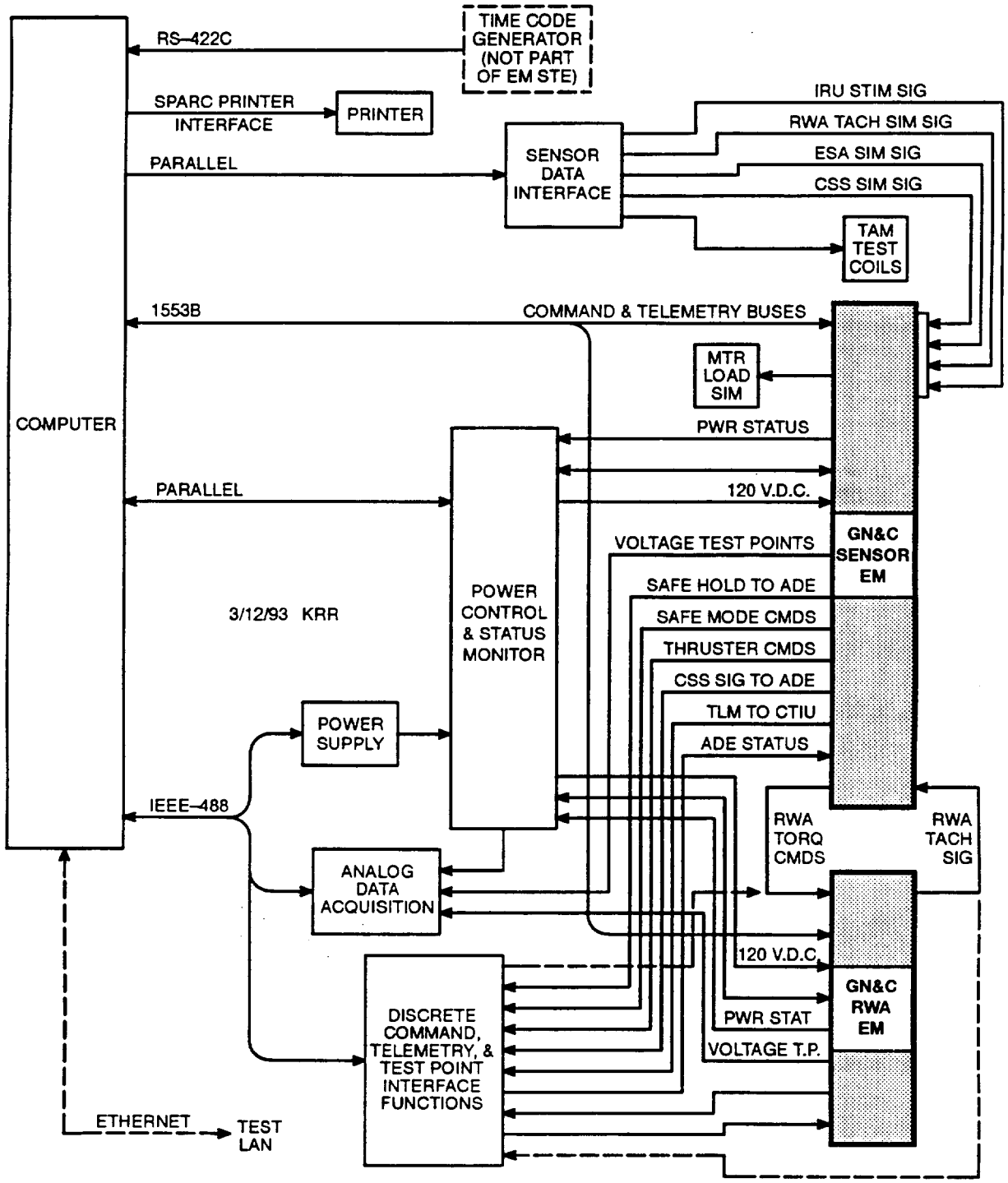

Figure 68. GN&C Equipment Module STE

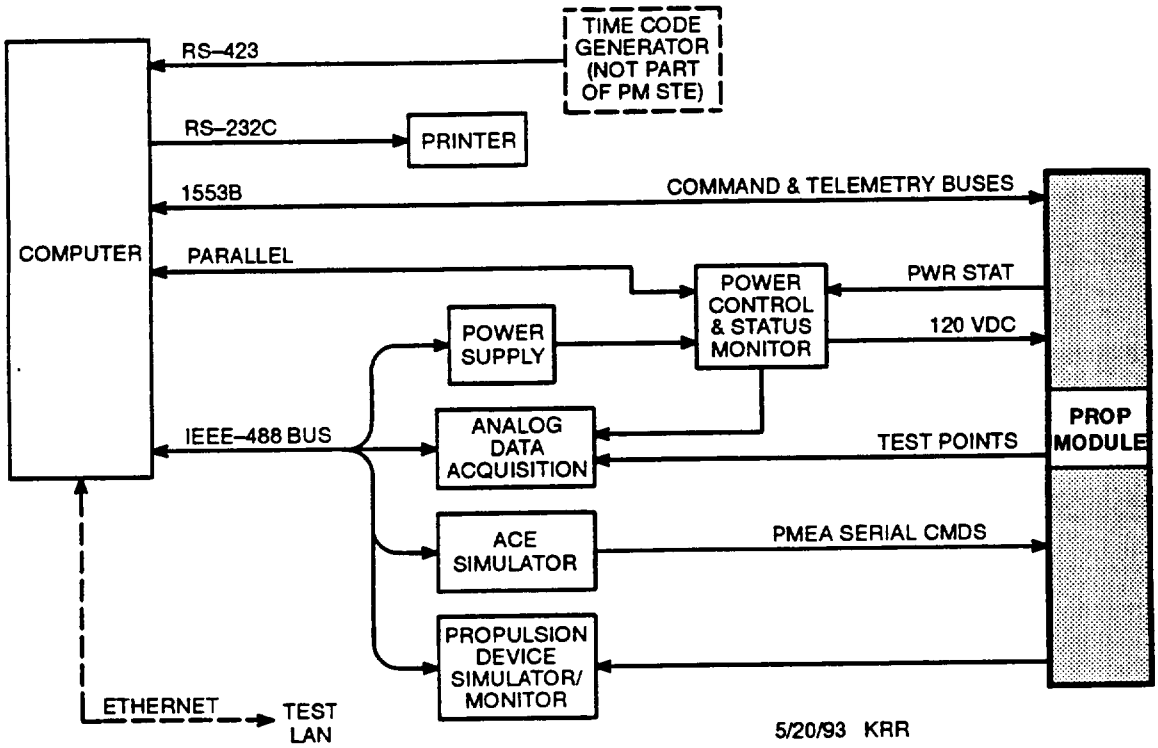

Figure 69. Propulsion Module STE

The interface configuration of the SIS is shown in Figure 70. Command & Telemetry Interface Unit (CTIU) and Bus Data Unit (BDU) emulation functions are provided. An IEEE-488 bus is available to interface instrument-specific test equipment to the controlling computer of the SIS.

13.10 Launch Support Equipment (LSE)

The Launch Support Equipment (LSE) provides electrical power to the Spacecraft through the umbilical harness during prelaunch checkout. The LSE, shown in Figure 71, also includes separate battery charger power supplies for the Spacecraft batteries and acquisition circuitry for monitoring critical Spacecraft parameters while on the launch vehicle. The LSE, in close proximity to the launch vehicle, interfaces command and telemetry traffic between the Spacecraft and the remotely-located SCS.

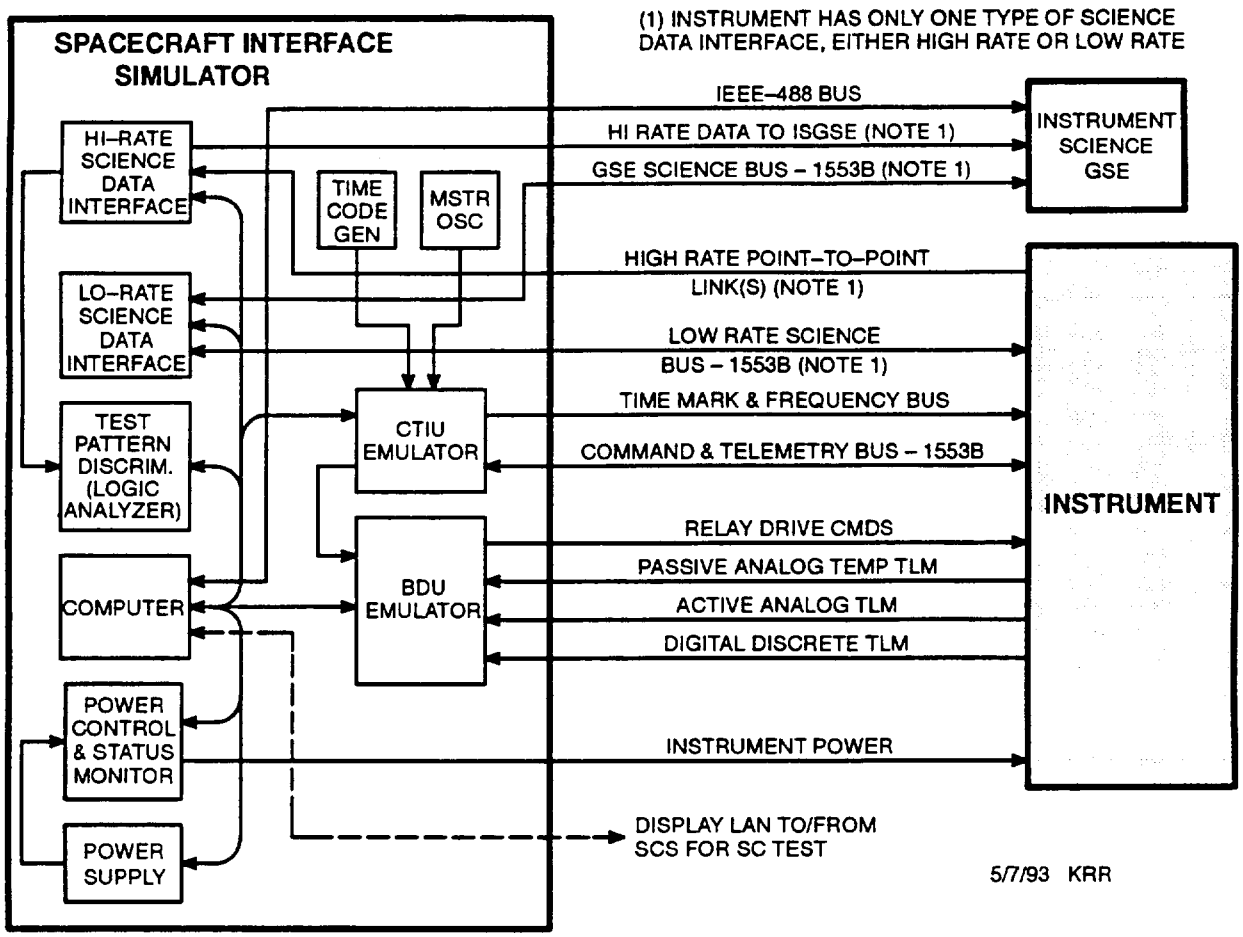

Figure 70. SIS Block Diagram

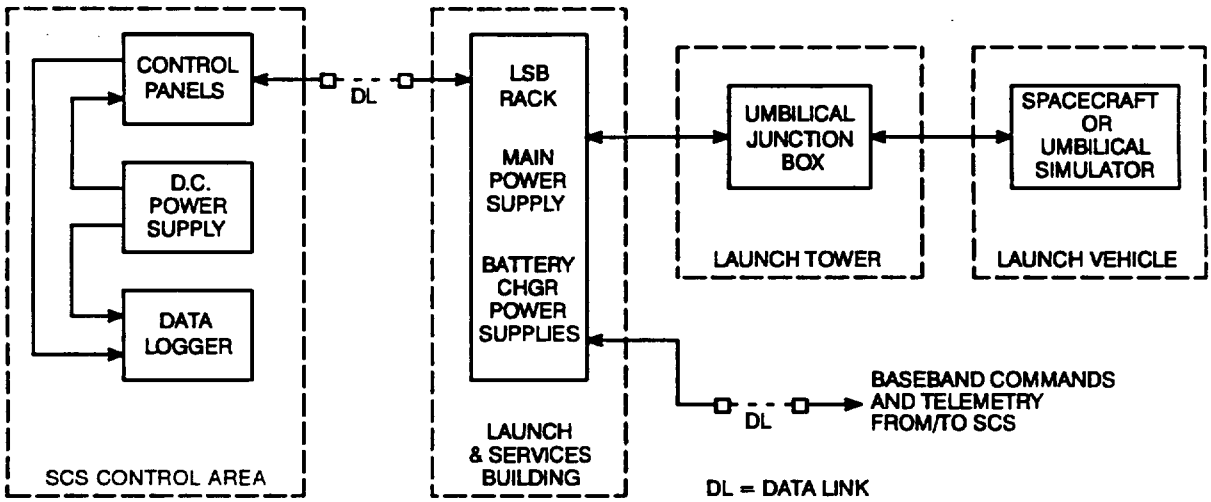

Figure 71. Launch Support Equipment

(This page intentionally left blank.)

14 SOFTWARE

The software for the EOS–AM Spacecraft is divided into four different elements: (1) Flight Software, which executes on–board the Spacecraft providing various services and functions; (2) Ground Support Equipment Software, which executes during the Integration and Test Phase on the Ground; (3) Flight Software Testbed (FSTB), which is the testbed for the Flight Software development in three functional forms: Software–only FSTB, which simulates the Spacecraft in software, and two HW/SW FSTB configurations (single processor and full–up configuration), where parts of the C&DH subsystem are replaced with actual hardware; (4) Operational Support Software which is comprised of the Spacecraft Analysis System (SAS) and the Spacecraft Simulator (SSIM).

Table XXII identifies the major elements of EOS Program software and firmware and gives overall estimates of size/complexity. To ensure flexibility of the software in its operational environment, it is constrained as to the percentages of available computing resources which may be utilized. These utilization limits are listed in Table XXIII, as a function of the stage in the software development cycle. Utilization limits are increased at the later stages, owing to refined knowledge of and/or confidence in characteristics, such as software size estimates, processor memory and interface speeds, communications latency, tasking prerequisites, and operating system overhead.

Table XXII. Software Elements Identity and Size

Major End Item	Software	Lines of Code	
Flight Software and Firmware	Spacecraft Control Computer	38,450	
	Cmd. & Telem. Interf. Unit	7,290	45,740 Subtotal
Ground Support Equipment Software (S/W)	Spacecraft Checkout Station	34,400	
	EM Special Test Equipment	10,700	
	Spacecraft Interface Simulator	8,400	
	GSE Common	27,500	81,000 Subtotal
Flight S/W Testbed Software	Flight S/W Testbed HW Control	8,000	
	Flight S/W Testbed Software	47,729	55,729 Subtotal
Operational Support S/W	SAS	46,000	
	SSIM	62,729	108,729 Subtotal
	Spacecraft Total		**291,198**

Table XXIII. Flight Software Maximum Utilization

Flight Software Development Capacity Limitations* General Computing Processors				
	PDR	CDR	FRR	Launch
CPU	35%	42.5%	47.5%	50%
I/O	35%	42.5%	47.5%	50%
RAM	42%	51%	57%	60%

Note: * Measured as a percentage of the total available resource

Flight Software Development Capacity Limitations* Dedicated Single Function Processors				
	PDR	CDR	FRR	Launch
CPU	56%	68%	76%	80%
I/O	56%	68%	76%	80%
RAM	49%	59.5%	66.5%	70%

Note: * Measured as a percentage of the total available resource

14.1 Flight Software

14.1.1 Host Locations

Flight Software will monitor, control, and provide the necessary services and mission support needed to sustain the Spacecraft throughout its life-span. This software and firmware executes from three separate processors as shown in the block diagram of the C&DH subsystem in Section 11, Figure 48.

Heritage firmware is contained in the Attitude Control Electronic (ACE) of the GN&C subsystem. It is expected that this firmware will require only minor modifications to support EOS; therefore, it is not covered in detail.

Most of the high-level software is hosted by the Spacecraft Controls Computer (SCC) units. One SCC is active at all times, and a second SCC is in a cold, unpowered state. Additional SCC firmware provides for start-up initialization.

The Command/Telemetry Interface Unit (CTIU) contains embedded firmware which includes command uplink processing, 1553B bus interface management and telemetry collection and formatting.

14.1.2 Flight Software Layering

The Flight Software Subsystem supports a multilayered architecture, as shown schematically in Figure 72. Layer 1 is concerned with the hardware and its electrical characteristics. Layer 2 provides the Operating System, I/O capabilities, and message transfer capabilities, while Layer 3 comprises application programs as required by various Spacecraft subsystem and/or instrument functions.

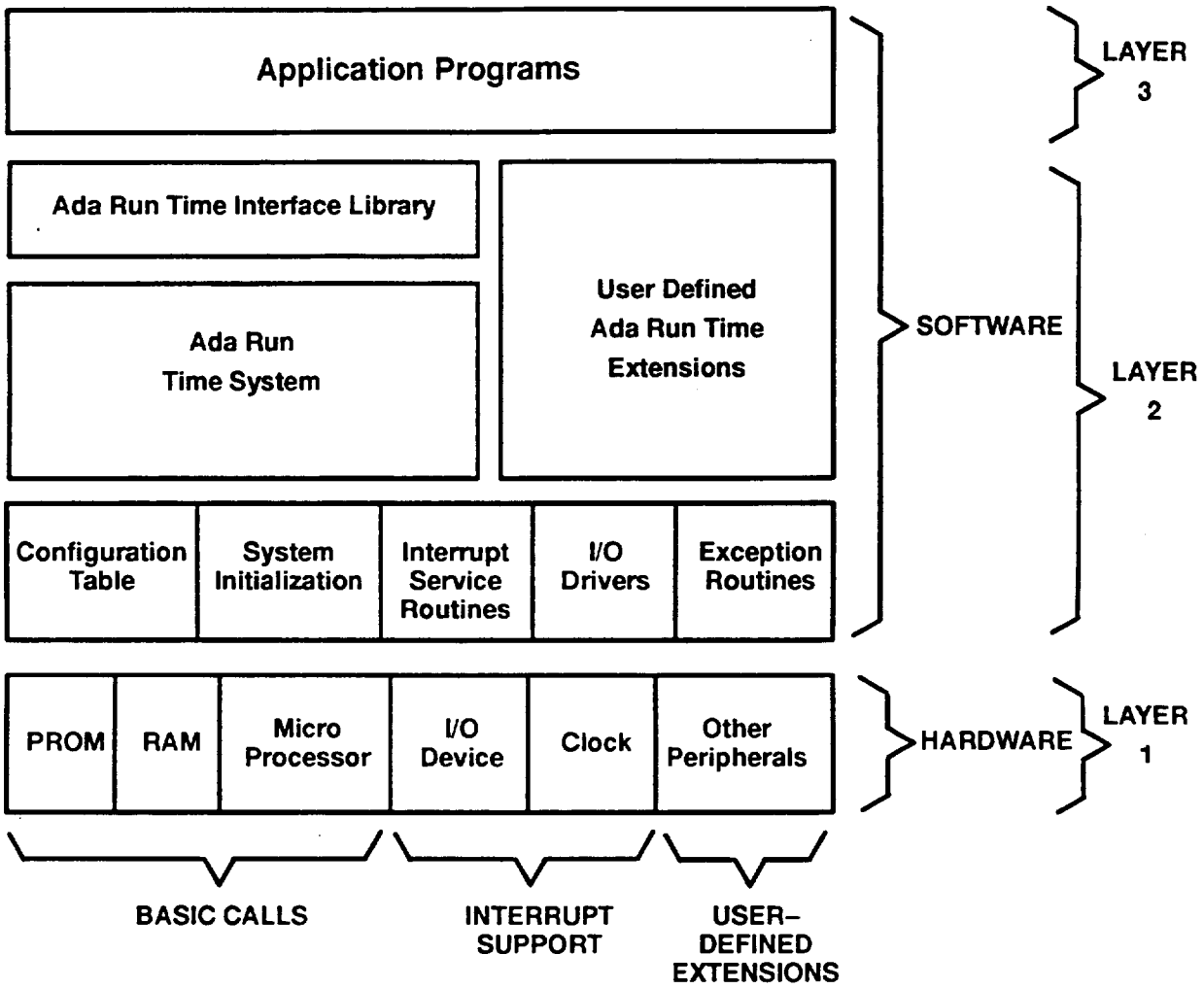

Figure 72. Flight Software Layering

14.1.3 Software Language

Most of the software in the SCC and CTIU is implemented in the Ada programming language which incorporates many beneficial features of modern software engineering technology. Certain functions on all processors are programmed in assembly language, where performance requirements so dictate.

14.1.4 Flight Software Partition

Spacecraft flight software—as software (S/W) and firmware (F/W)—is distributed among two components of the C&DH subsystem, as indicated in Table XXII.

SCC resident software determines and controls the Spacecraft's position, attitude, power distribution, and thermal loading by issuing commands to the appropriate subsystem equipments via the CTIU over the 1553B Command and Telemetry (C&T) bus.

SCC resident firmware provides bootstrap and self test capabilities. This firmware is procured from the SCC vendor.

The CTIU Firmware resides in ROM within the CTIU processors.

14.1.5 Spacecraft Controls Computer (SCC) Software Description and Utilization

The SCC software is partitioned into several software components as described in Table XXIV.

Table XXIV. SCC Software Resource Estimates and Utilization

Function	Lines of Code	Memory (Kwords)	Required Inst./sec.
Command, Telemetry, & Control	4,350	54.51	101,257*
Attitude Determination & Control	13,100	95.95	222,345*
Navigation	13,250	126.32	146,285*
TONS			842,105**
EPS/TCS Software	4,450	32.59	25,714*
SCC OS/Executive	3,300	33.94	88,114*
Totals	38450	343.31	1,425,820
Available (@ 1.5 MIPS and 1 M word)		1000.00	1,500,000
Margin		656.69	74,180
Percent Utilization		34.0%	
Max. Pre-PDR Utilization		42.0%	

* Includes the PDR Margin of 35%
**Includes the FRR Margin of 47.5% for TONS

The Command, Telemetry, and Control Software provides the Spacecraft command, control, and SCC telemetry processing functions. These include SCC command validation, distribution, and execution of stored commands for the Spacecraft and instruments. Telemetry processing includes data collection within the SCC and transmission to the CTIU for inclusion in the downlink telemetry stream. This Software also monitors the telemetry stream to perform a Fault Detection, Isolation and Recovery (FDIR) function, and provides time management.

The GN&C software is split into two separate CSCIs: Navigation and Attitude Determination and Control (ADAC). Navigation Software includes TONS and ephemeris calculation. Based on the GN&C mode control software, the attitude determination software produces the vehicle state vector. This is used by attitude control, momentum unloading, and propulsive maneuver control software to obtain and maintain desired attitude and orbit. ADAC software also provides Spacecraft ancillary data and articulation control for the solar array assembly (SAA), and high–gain antenna (HGA).

Thermal Control subsystem (TCS) software monitors and controls various TCS components. Electrical Power Subsystem (EPS) software monitors and controls EPS components to maintain optimal power and efficiency.

The SCC Operating System/Executive, which resides in the flight processor, is composed of a commercial Ada Run–Time System and custom software to support the SCC environment. This custom software provides for an executive (e.g., software load function, multi–task scheduling, synchronization, memory management), mission management function, library and utilities (e.g., memory load and dump) and performance monitoring (e.g., built–in–test, activity logs).

14.1.6 Firmware Description and Utilization

CTIU firmware supports the acceptance, decoding and distribution of all uplinked command and data packets. It implements the bus control interface per MIL–STD–1553B for the Command and Telemetry Bus. It collects, controls, formats, and routes telemetry as well as making available telemetry data to the SCC. It also supports the assignment of control to either SCC or the ACE for the Spacecraft Safe Mode. Table XXV provides the memory and CPU estimates for the CTIU Firmware.

Table XXV. CTIU Firmware Estimates and Utilization

Processor	Lines of Code	Memory k words ROM Used	RAM Used	RAM Avail.	Required Inst./sec.	KIPS Avail
CTIU	7,290	59.5	63.15	192	159,716	750
Percent Utilization				33%		21%
Max Allowed Utilization (pre PDR)				49%		56%

14.2 GSE Software

14.2.1 Spacecraft Checkout Station (SCS) Software

The SCS is controlled by a Test Operator who enters directives at the SCS Work Station. The SCS operator interface and control software, residing in the SCS computers, processes and verifies the directives, and issues commands to the Spacecraft, Housekeeping modules, and SCS Test Equipment. The SCS software also collects and processes telemetry data returned from the Spacecraft, Spacecraft buses, and Test Equipment in an open loop. Errors and out–of–limit conditions in the logged data are flagged for later analysis. Much of the software will be implemented in the GFE package OASIS supplied by the University of Colorado.

The SCS software real-time control and monitoring resides in dedicated processors. These processors accept control from the SCS main computers, and return equipment status and other data to them via the SCS Test LAN.

The SCS has four operational modes, to support all phases of Spacecraft integration. The capabilities supported by the SCS are a function of the operational mode, as indicated in Table XXVI. The SCS block diagram is shown in Figure 73. The full Spacecraft mode is utilized during test at the factory and at the launch site.

Table XXVI. SCS Capabilities

SCS MODE	Bus Traffic	SCS/GSE	Spacecraft Telemetry	Spacecraft Commanding
Spacecraft Simulation	Simulated	Yes	No	No
CTIU Emulation	Live	Yes	Partial	Yes
EM/Instrument Emulation	Live	Yes	Partial	Yes
Full Spacecraft	Live	Yes	Yes	Yes

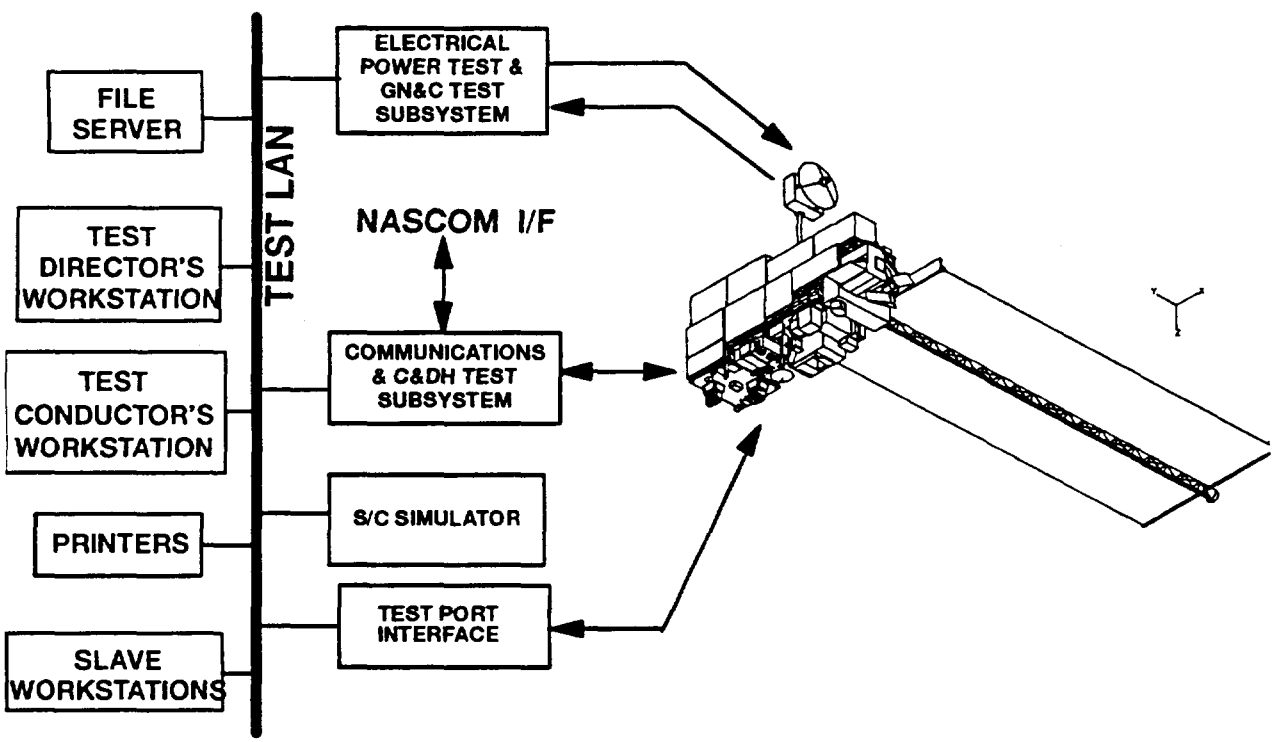

Figure 73. SCS Block Diagram

14.2.2 Spacecraft Interface Simulator (SIS) Software

Like the SCS, the SIS uses test directives to provide capabilities to exercise instrument test cases and selectively activate/deactivate processing of telemetry and test equipment data. The SIS test setup is shown in Figure 74. In addition to the Test Equipment provided with the SIS, the SIS software also interfaces with the instrument–specific GSE.

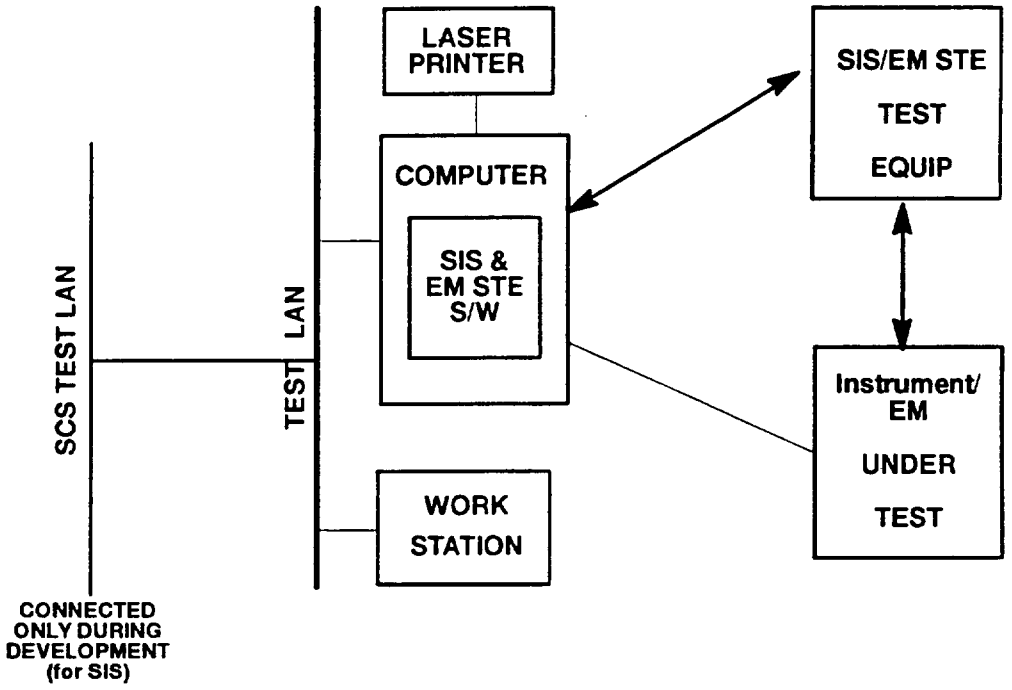

Figure 74. SIS and Generic EM STE Test Setup

14.2.3 Equipment Module STE Software

The EM STE uses test directives to support EM unit testing. Unit testing exercises all EM functions possible prior to the integration on the Spacecraft Checkout Station. The following EM STEs are provided: COMM and C&DH EM STE, the GN&C EM STE, the power EM STE, the recorder EM STE, and propulsion STE. Equivalent to the SIS is a generic EM STE containing a computer, various test equipments, and a connection into the EM; see Figure 74.

14.3 Software Development

14.3.1 Software Development Facility (SDF)

The SDF, shown in Figure 75, provides a complete and consistent support environment for the design, development, verification, and maintenance of the EOS Spacecraft software and associated documentation. It employs an integrated hardware–software system, utilizing both commercial and developmental products. The facility supports workstations for each user, and provides software tools for requirement analysis, design, implementation, testing, IV&V, configuration management, and audit.

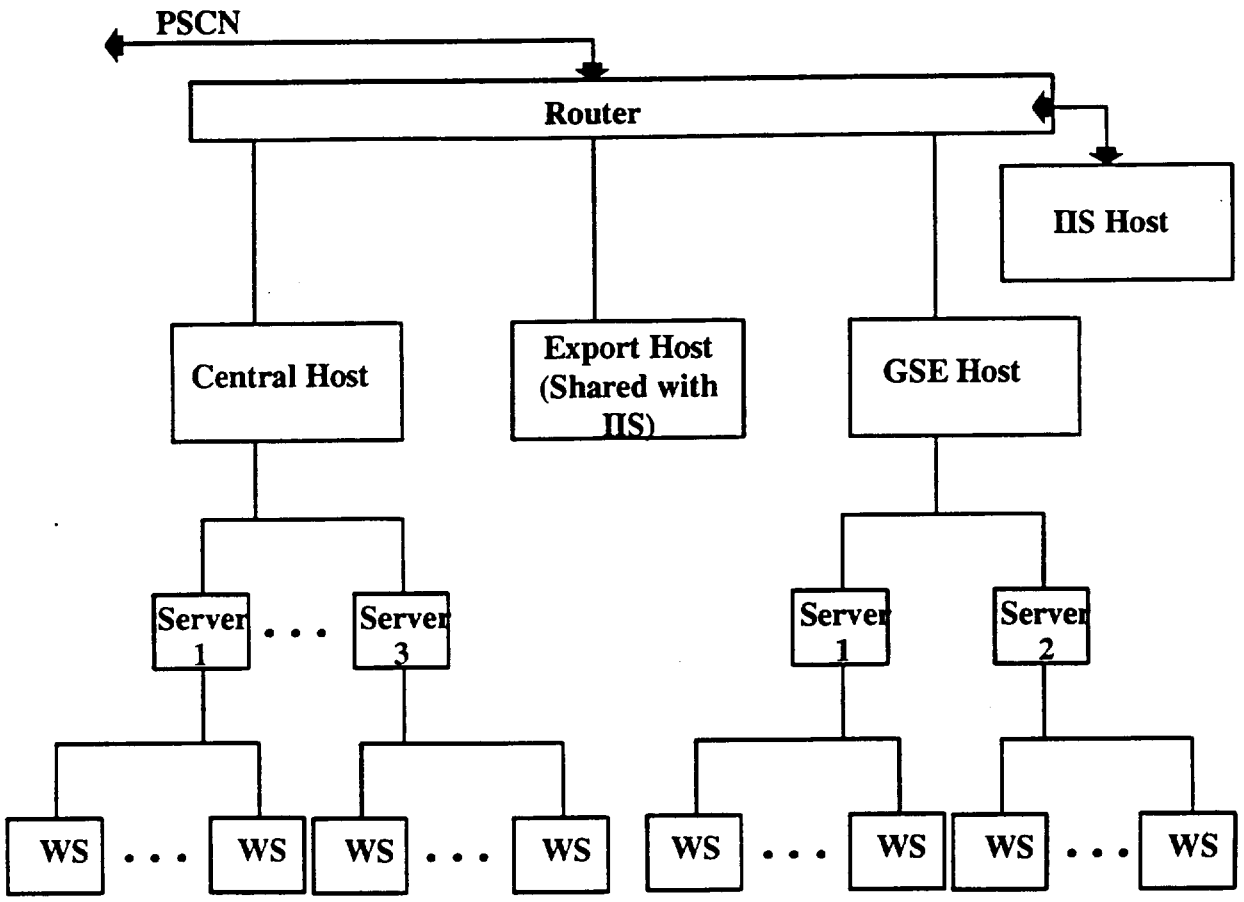

Figure 75. Software Development Facility Hardware Configuration

The SDF hardware is configured around Sun SPARC computers in a host server, workstation topology. These are augmented by standard peripherals.

The SDF workstations are linked by a Local Area Network (LAN) to the server complex. The overall SDF Network uses several LANs in a topology which provides all necessary access by authorized users, but restricts access of some users to some parts of the system.

14.3.2 Flight Software Testbed

The purpose of the Flight Software Testbed (FSTB) is to provide a tool for debug, test and acceptance of EOS flight software and firmware. The Flight Software Testbed exists in three forms:; (a) a software–only form in which everything including the 1750A processors (CTIU and SCC) and subsystem devices (sensors and effectors) are simulated in software, (b) a single processor hardware configuration and, (c) a full hardware/software form in which the 1750A hardware processors (CTIU and SCC) communicate with simulated (software) devices (sensors and effectors). The software–only Testbed executes on the SDF workstations. The hardware/software Testbed executes on specific SDF workstations which include the special hardware.

The purpose of the software–only configuration is to provide a facility, early in the program to do initial software development, debug and integration. The purpose of the hardware/software configurations is to provide a facility, which operates in real time on flight equivalent hardware to conduct acceptance testing of the flight software and firmware. The full hardware/software testbed, shown in Figure 76, includes C&DH hardware functionally equivalent to that on the Spacecraft and simulation software necessary to support its operation. The testbed provides for integration and testing of key C&DH hardware and software before its use in Spacecraft integration and test.

Flight Software is loaded into the testbed's processors either by upload to RAM, or by insertion of programmed PROMs. The non–C&DH portions of the Spacecraft are simulated by software in the Sun computers with I/O interfaces to MIL–STD–1553B buses. The simulation software produces data simulating typical C&DH inputs and responds to C&DH software–generated outputs in a closed–loop simulation of the Spacecraft.

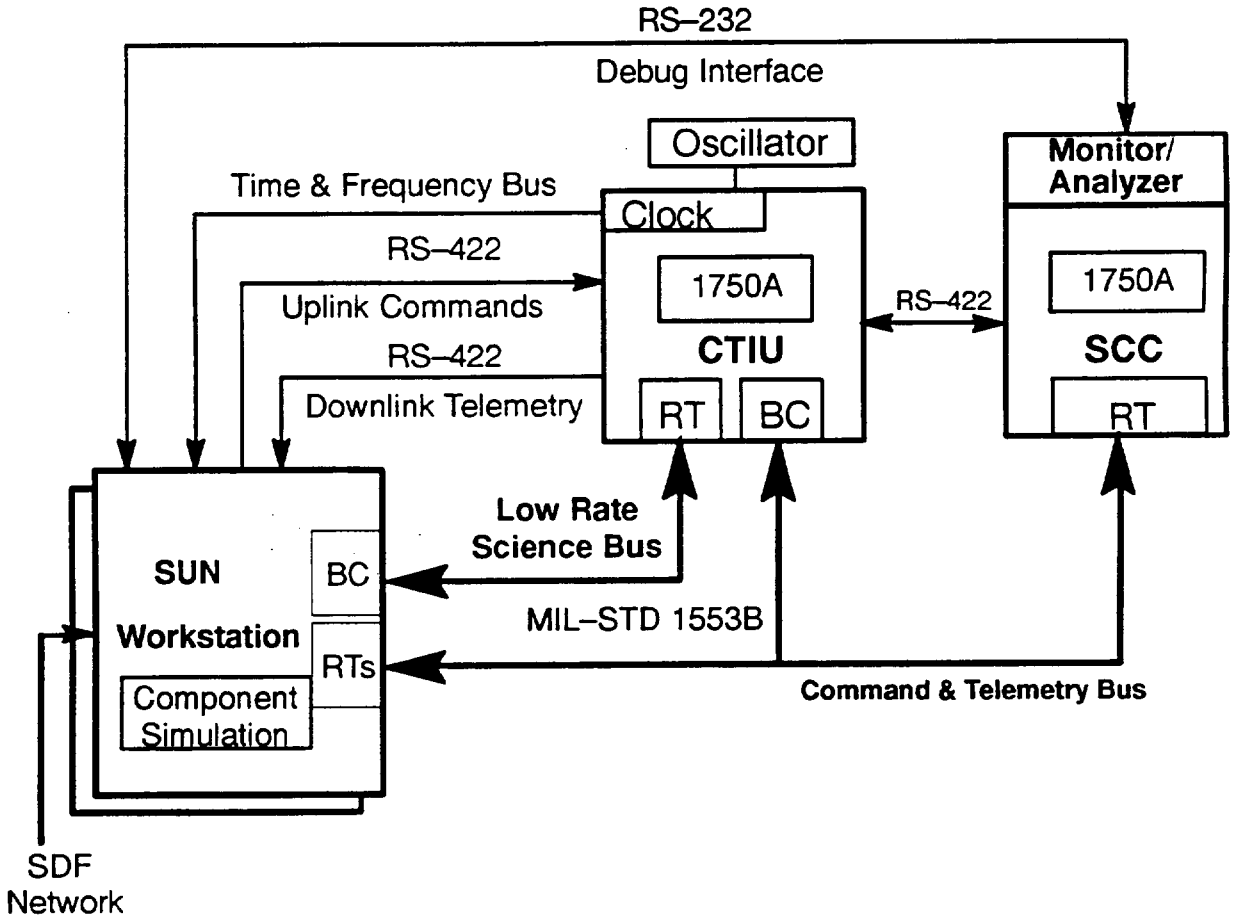

Figure 76. Full HW/SW Flight Software Testbed

14.3.3 SDF Commercial Software Use

The SDF supports all phases of the software development life–cycle, using a set of software tools, as listed in Table XXVII, to do so.

General concept documents are produced using Interleaf, at the workstation and server level. For completed documents, a configuration–controlled baseline is maintained using Interleaf and Ingres. Teamwork is used at this phase to prototype and analyze potential software designs.

Software requirements specifications are entered as Teamwork models to allow subsequent traceability. Requirements are also sorted and searched using the RDD 100 database system. Interleaf is used for generation of final requirements specifications.

Software prototyping is begun using the Ada compiler system. Preliminary and detailed design depend on Teamwork for software modeling and analysis support. Models are decomposed into Ada packages, and Ada PDL is generated using Teamwork/Ada. The Ada compiler system performs syntax checks on the Ada PDL.

In the implementation phase, code is entered using text editors. Compilation and library management are performed by the Ada compiler system. Developed code is configuration managed using CMF.

Table XXVII. SDF Software–Development Tools

Tool	Purpose	Location
Sun UNIX	Operating System	All
CMF	Configuration Management	Host and Server
Ingres	Database	Host
Ada Compiler System	Code Compilation, Library Management, and Source Level Debugging	Host and Workstation (1750A Target) Host (SPARC Target)
Interleaf	Local Document Processing	Workstation
Teamwork	Design and Analysis	Workstation
RDD 100	Requirements Traceability	Host and Workstation
X.desktop/Motif	Common User Interface	Workstation
1750–A Simulator	Op–Code Simulator	All
Logiscope	Metrics	All
Lotus 1–2–3	Spreadsheet	Workstation
PV Wave	Graphic Analysis	Workstation
Guru Tape	Network Backup	Server and Host

14.4 Operational Support Software

This software is to be developed as part of the Operational Support Sub–element of the project. A complete description of the functions to be supported is found in Section 17, Ground Systems. Software will be developed to support two ground system facilities, the Spacecraft Analysis System (SAS) and the Spacecraft Simulator (SSIM).

14.4.1 Spacecraft Analysis System (SAS)

Software to support the SAS shall be both reused software and newly developed software. The reused software is from the core of the Spacecraft Checkout Station (SCS). Software from the SCS will be transported to the SAS as common functions are identified, yet the requirements of the SAS shall not drive the design of the SCS software. New software will also be developed to fill in the requirements not satisfied by transporting SCS software. These functions are described in Section 17.1.

14.4.2 Spacecraft Simulator (SSIM)

Software for the SSIM, like the SAS, will be both reused and newly developed. The reused software will be the FSTB Software developed originally for flight software testing. This will be augmented by new software which will repackage the test software for use in operations. This software is then named Mission and Simulation Software.

(This page intentionally left blank.)

15 INTEGRATION, TEST, AND LAUNCH SITE OPERATIONS

15.1 Spacecraft Verification Process

Verification is the process of tests, analyses, inspections, and demonstrations that, collectively, determine that performance requirements levied on a product have been met. This process, whose results are used to ascertain that an item meets applicable functional and performance requirements and, therefore is flight–worthy, is performed during the development, qualification, and acceptance phases of a Spacecraft program. In the process, as illustrated in Figure 77, the performance and design requirements of an item are used to establish and allocate the verification requirements. The designated verification methods are then implemented and the results are compared against the requirements. After this comparison, verification is either confirmed, or the design or manufacturing process is altered to effect performance compliance with the requirements. If such a redesign or change in manufacturing is made, the item undergoes complete or partial re–verification depending on where in the cycle the noncompliance occurred.

Verification is performed, as a minimum, on the performance requirements allocated to the component, subsystem, equipment module (EM), Spacecraft bus, and Spacecraft levels of assembly for flight hardware. Other stages of assembly may require verification of engineering parameters specified in their drawings or specifications. For flight software, verification is performed at the Computer Software Component (CSC) level prior to integration into the flight code, then at the Computer Software Configured Item (CSCI) level prior to integration with hardware. Verification of ground support equipment (GSE) is performed prior to use of the GSE with flight hardware. Verification of flight support equipment (FSE) is performed in the same manner as for flight hardware.

In most cases, test and verification of Spacecraft hardware will be conducted according to the principles of a Protoflight Test Program. The protoflight end item or system is designated in advance to serve both qualification and flight purposes. It is subjected to environmental tests which combine the requirements of both qualification and flight acceptance testing. Protoflight tests are conducted at qualification test levels utilizing flight acceptance durations. Protoflight equipment can then be used for flight without refurbishment.

The Spacecraft verification process, shown in Figure 78, begins at the component qualification level and extends through Spacecraft ground system end–to–end verification. Individual components, equipment modules, major assemblies, and instruments are qualified prior to Spacecraft integration. Subsystem and system–level interface verification and performance verification are accomplished at the Spacecraft level, aided by the modular design of the EOS–AM Spacecraft.

15.2 I&T Overview

The I&T organization has the responsibility for all aspects of assembly, integration and test of flight hardware above the component level. This includes test planning and scheduling, definition of requirements for MGSE and EGSE, facilities planning, review of designs for producibility and testability, support of test plan generation, generation of test procedures and performing hardware assembly, integration and test.

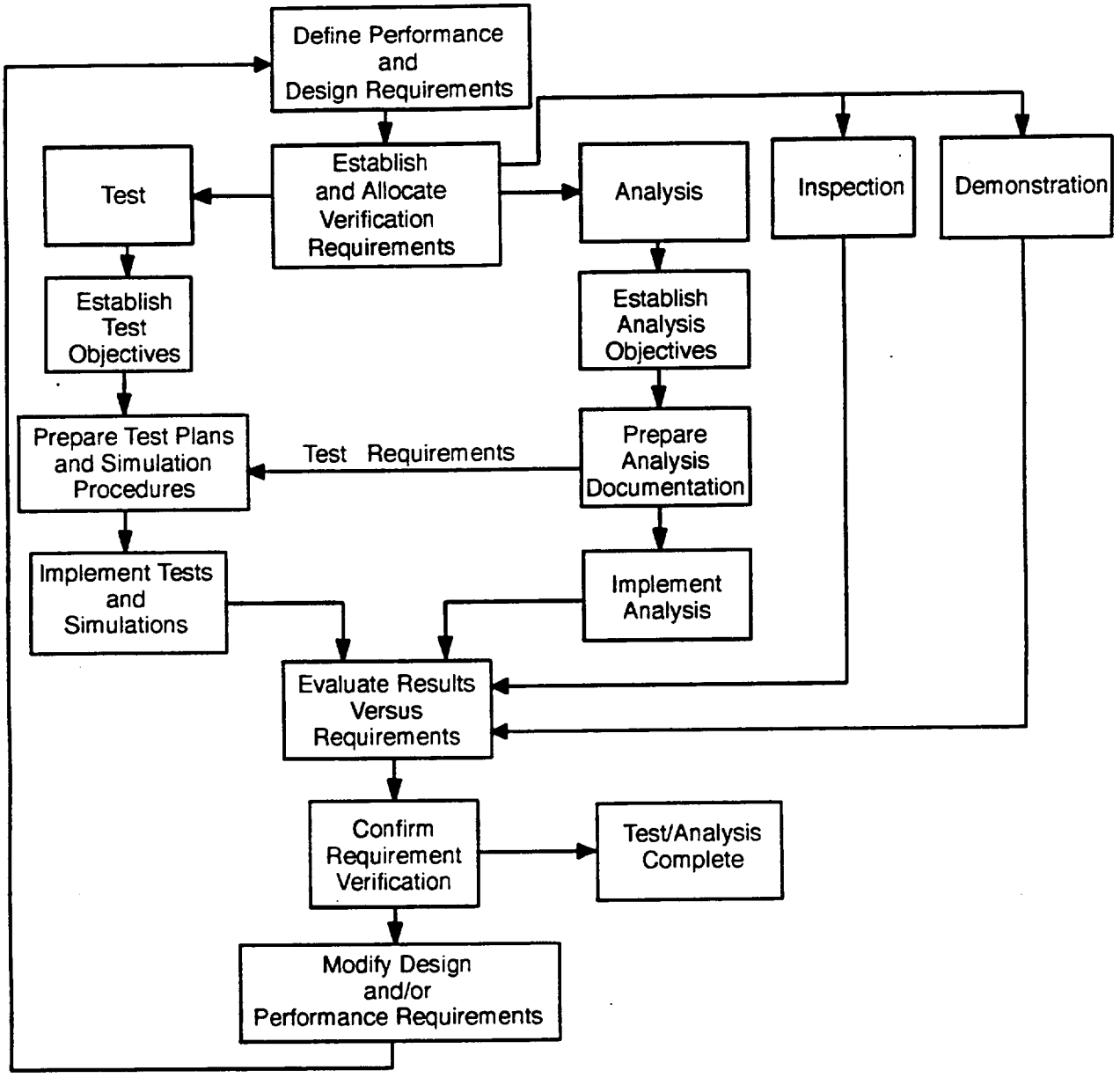

Figure 77. Summary of the Verification Process

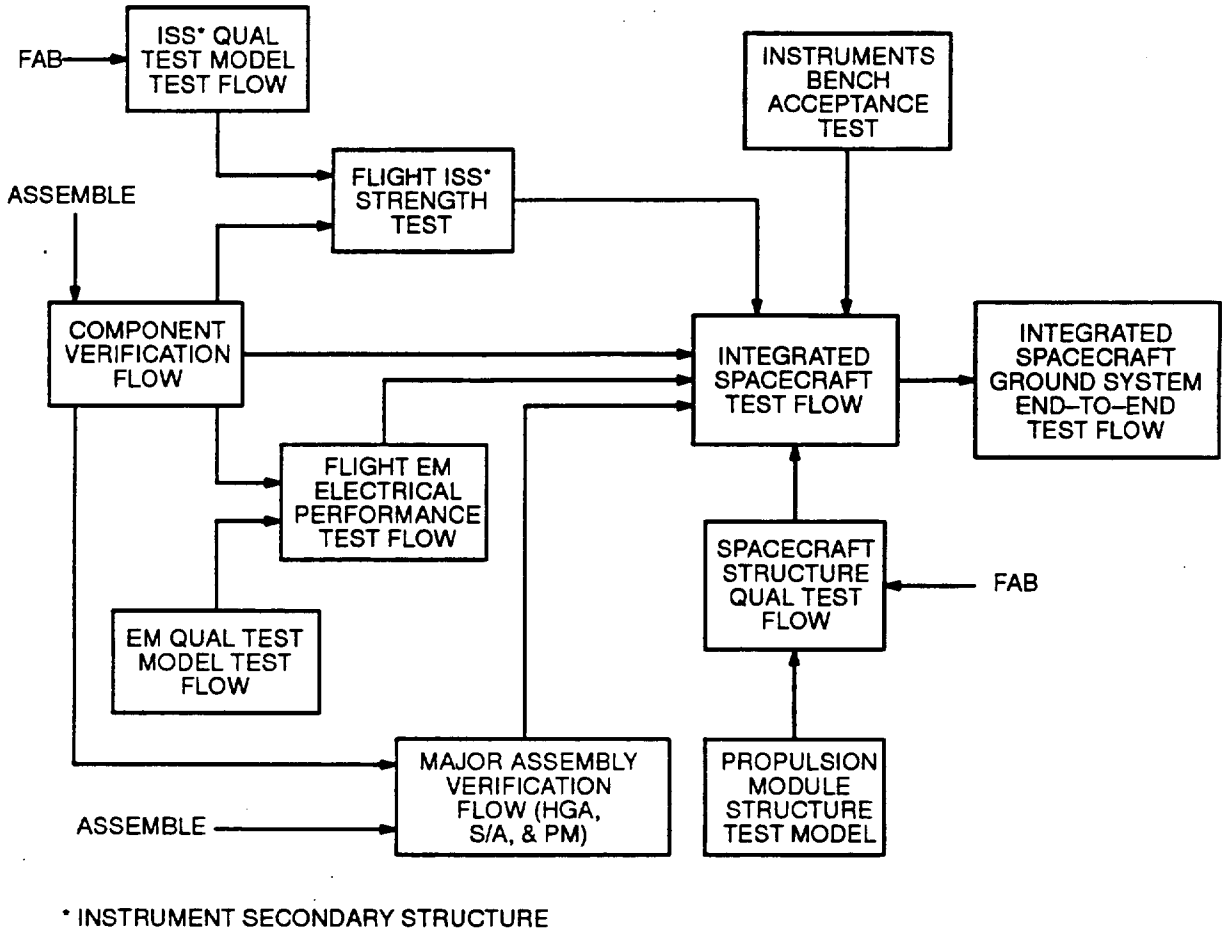

Figure 78. Spacecraft Verification Flow Overview

15.2.1 I&T Planning

Planning of I&T activities begins in the early phases of the Spacecraft design process. I&T is an integral member of the concurrent engineering product teams. Product teams provide a systematic and concurrent approach to the development of the design, manufacture, test and integration of the EOS–AM hardware. I&T support of product teams and design reviews promotes incorporation of producibility and testability within the flight hardware designs. Development of test requirements and test plans, in the beginning phases of the program, is another significant benefit of the concurrent engineering effort.

Early involvement with the instrument providers is one of the primary focuses of the early I&T effort. Establishing a mutual understanding of the requirements for delivery of the instruments, integration to the Spacecraft and testing at the Spacecraft level is essential for a timely, successful completion of these tasks. Instrument accommodation colloquiums will be held on a regular basis to develop the requirements. Development of the mechanical integration requirements will identify, among other things, alignment procedures, facility requirements, contamination control procedures and special constraints. Similarly, electrical requirements development will establish test philosophies and formats, EGSE and IGSE requirements, and any special test constraints.

Assembly planning is a significant part of the pre–hardware I&T effort. This effort concentrates on the development of an assembly flow plan for the Spacecraft and its major assemblies. These plans are developed with consideration for ease of assembly, facility constraints, optical alignment requirements, accessibility, cost effectiveness and operator safety. I&T will also develop requirements for the MGSE necessary to support the assembly and testing processes. This is followed by detailed assembly planning and procedure development. Details of Spacecraft assembly are documented in the EOS–AM Spacecraft Assembly Plan and Integration Procedures and Records (IPR).

Test planning is another large part of the pre–hardware I&T effort. The test requirements developed through the product teams and instrument accommodation colloquiums are the foundation for the test plans. Through the development of the test plans, facility and ground support equipment requirements are identified. I&T is actively involved in the generation of the support equipment specifications to assure proper form, fit and function. Timely, accurate definition of support equipment requirements is critical as test and integration procedures are dependent on them. Consequently, the test and integration procedures are developed after support equipment definition. Details of Spacecraft testing are documented in the EOS–AM Subsystem and Spacecraft Test Plan.

15.2.2 Levels of Testing

The flight hardware test verification program incorporates test activities at the three major levels of assembly: Component, Equipment Module and Spacecraft. Collectively, the test results from each level provides verification, to the extent possible by testing, that the flight hardware meets design and performance requirements.

The most extensive performance and environmental testing is performed at the component level. This is due mainly to the greater testability afforded by the direct access to box interfaces and test connectors. Performance is evaluated while exercising the component through its entire electrical and environmental test ranges. Component testing provides the earliest risk retirement. Detailed definition of component testing is described in the component test plans and procedures.

Equipment module testing focuses primarily on the integration of the components within an EM and the functional verification of the fully assembled EM. Interface compatibility is verified throughout the build up of the EM. A series of open circuit and mated circuit electrical tests are performed, during the integration of each component, to verify each interface. After the EM is fully assembled, a performance test is performed to demonstrate functionality and self compatibility of the components within the EM. Detailed definition of EM testing is described in the EM test plans and procedures.

Spacecraft testing verifies the interface compatibility of the EMs and instruments, evaluates the functional performance of each of the Spacecraft subsystems and instruments, demonstrates subsystem/instrument self–compatibility, and verifies Spacecraft performance in simulated mission environments. Detailed definition of subsystem and Spacecraft test is described in the EOS–AM Subsystem and Spacecraft Test Plan. Figure 79 shows how the assembly and verification processes and their related documentation overlap during the I&T program.

15.3 Equipment Module Integration and Test

Equipment module integration and test will be performed by the I&T organization. EM I&T provides risk mitigation through parallel activities and interface verification prior to Spacecraft integration. Additional benefits of the EM I&T approach is the validation of the command and telemetry database and data displays, and the familiarization with EM hardware and test routines prior to Spacecraft testing.

Figure 80 illustrates the typical equipment module assembly and test flow. Assembly and test of the EMs will be performed in parallel and independent of each other. Each EM will have a dedicated equipment module special test equipment (EM STE) test station to perform all of its electrical testing.

The assembly of the EMs will begin with the installation of flight equipment onto the individual panels which make up a module. Powered and unpowered open circuit tests will be performed to verify a safe to mate condition before any mating occurs. When all of the equipment panels for a particular EM have been assembled, the electrical integration of the EM will begin. The individual EM panels will be connected to each other with test harnesses if the flight harness does not allow this connection with the panels disassembled. A functional test will be performed with the panels electrically connected. After completion of the functional test, the EM panels will be assembled together to create the module assembly.

Performance and environmental testing is performed with the EM in the fully assembled configuration. Performance tests will be performed before and after environmental testing. Environmental testing is performed to verify workmanship and consists of three–axis sine vibration, acoustics and thermal cycling. Mass properties measurements will be made just prior to Spacecraft integration.

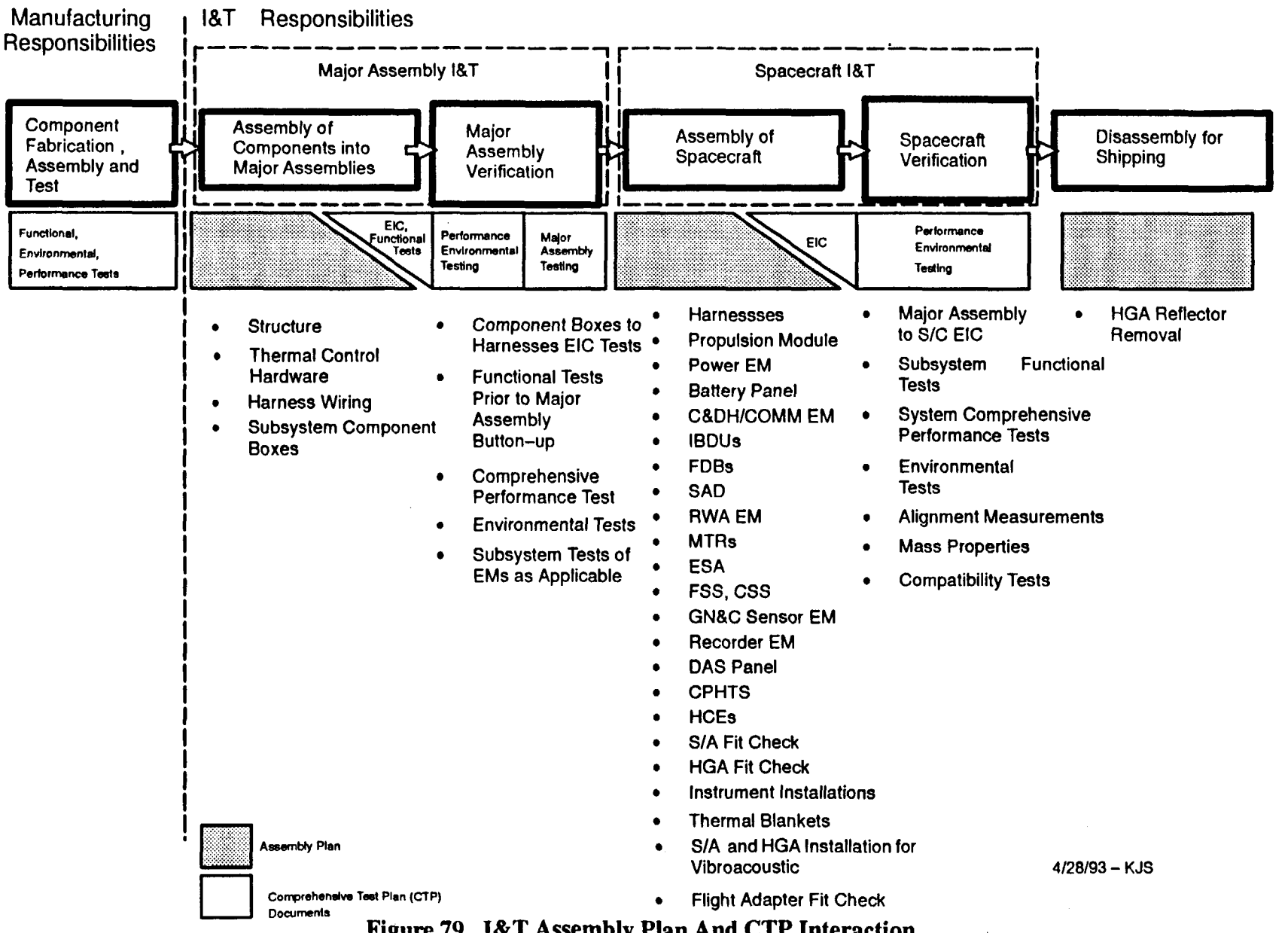

Figure 79. I&T Assembly Plan And CTP Interaction

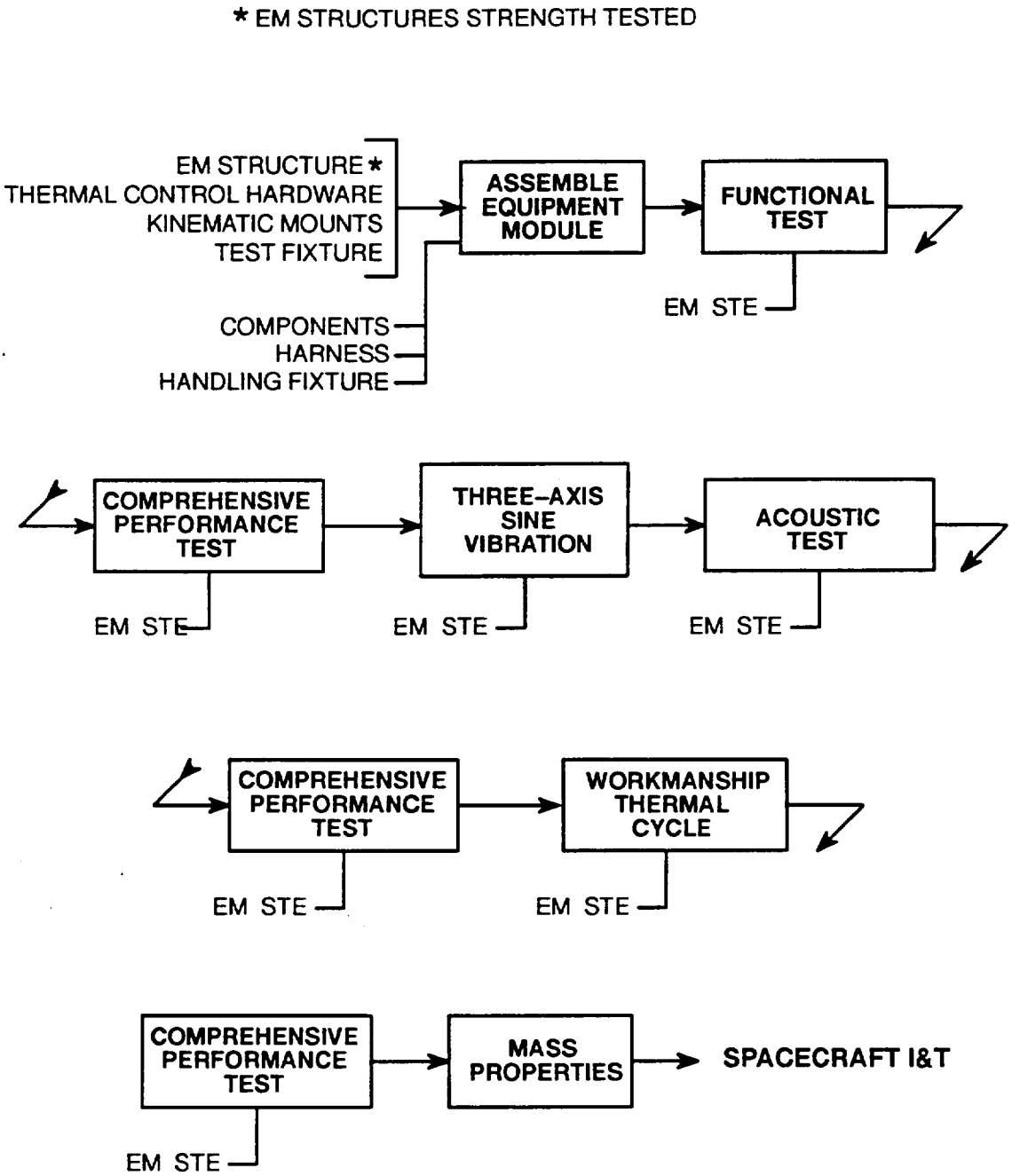

Figure 80. Equipment Module Assembly and Test Flow

15.4 Spacecraft Integration

15.4.1 Mechanical Integration

Integration of the Spacecraft will begin with the delivery of the core structure assembly to I&T. The assembly of the Spacecraft is a multi-phased activity where groups of related hardware are integrated with the core structure assembly. This hardware consists mainly of the Electrical Accommodation Subsystem (harnesses), Propulsion Module, Solar Array, HGA boom and deployment equipment, Equipment Modules, Thermal Control Subsystem and structure mounted components. The Spacecraft integration flow is shown in Figure 81.

The first group of components to be integrated with the core structure is associated with the EAS. Following the assembly of the EAS hardware on the core structure, the qualified Propulsion Module will be integrated. The Equipment Modules will be integrated to the Spacecraft next. As each EM is installed, any related structure mounted components will also be installed and electrically integrated to simplify the electrical integration of each subsystem. This is depicted in the Spacecraft integration flow. Installation and checkout of the CPHTS assemblies will be performed next. The HGA assembly and the solar array assembly will be installed for a fit check to verify all mechanical interfaces and then will be removed. Final installation of these assemblies is accomplished during the Spacecraft test flow just prior to the Spacecraft acoustics test. At this point, the instruments will be installed. This completes the assembly activities associated with the Spacecraft integration flow.

There are several mechanical integration activities which will take place as part of the Spacecraft test flow shown in Figure 82. The first activity will be the installation of MLI (thermal blankets) and other flight thermal control hardware prior to the Spacecraft thermal vacuum test. The HGA and Solar Array assemblies will be installed prior to the Spacecraft acoustics test. The final mechanical assembly activity during the test flow will be the installation of the flight batteries prior to the last Spacecraft comprehensive performance test and the shipment of the Spacecraft.

15.4.2 Electrical Integration

Spacecraft electrical integration is an iterative process in which individual EMs are electrically verified immediately following their mechanical integration to the Spacecraft structure. The EM integration sequence provides for development of the critical bus resources necessary for the integration of the subsequent EMs. Electrical integration will verify performance of the Spacecraft bus, including flight software, prior to instrument integration.

Following mechanical integration of an EM, a series of open circuit tests will be performed to verify a safe to mate condition before mating the core harnesses to the EM. A functional test is then performed to demonstrate proper operation of the EM. The Power and C&DH/COMM EMs will be the first integrated to provide the necessary power, command and telemetry functions required for integration and operation of the remaining EMs. The Flight Software Interface Verification test will be performed after all the EMs have been integrated and verified. This test verifies flight software interfaces with the flight hardware. A comprehensive performance test is performed as the final evaluation of the Spacecraft bus prior to instrument integration. Electrical testing during

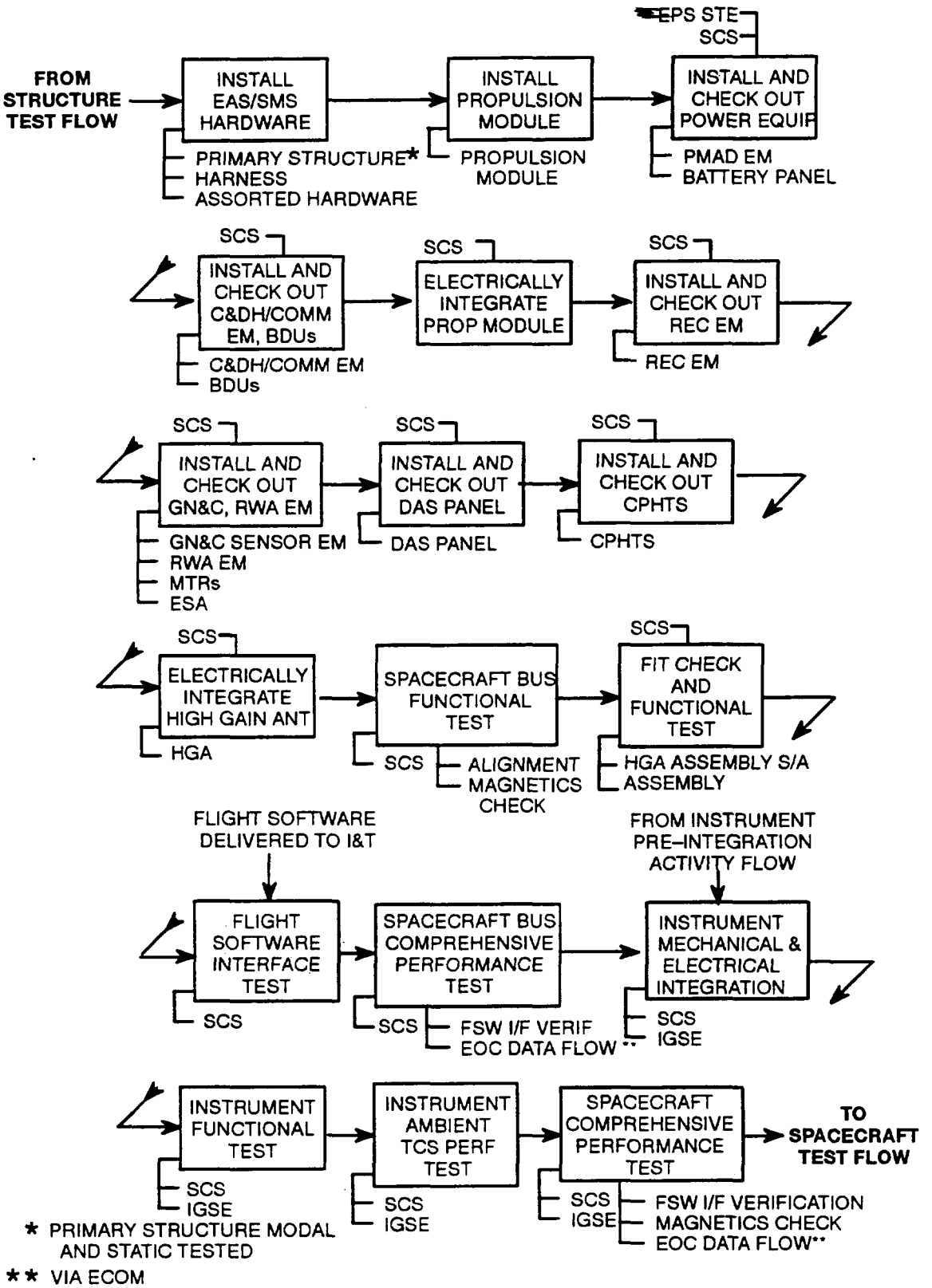

Figure 81. Spacecraft Integration Flow

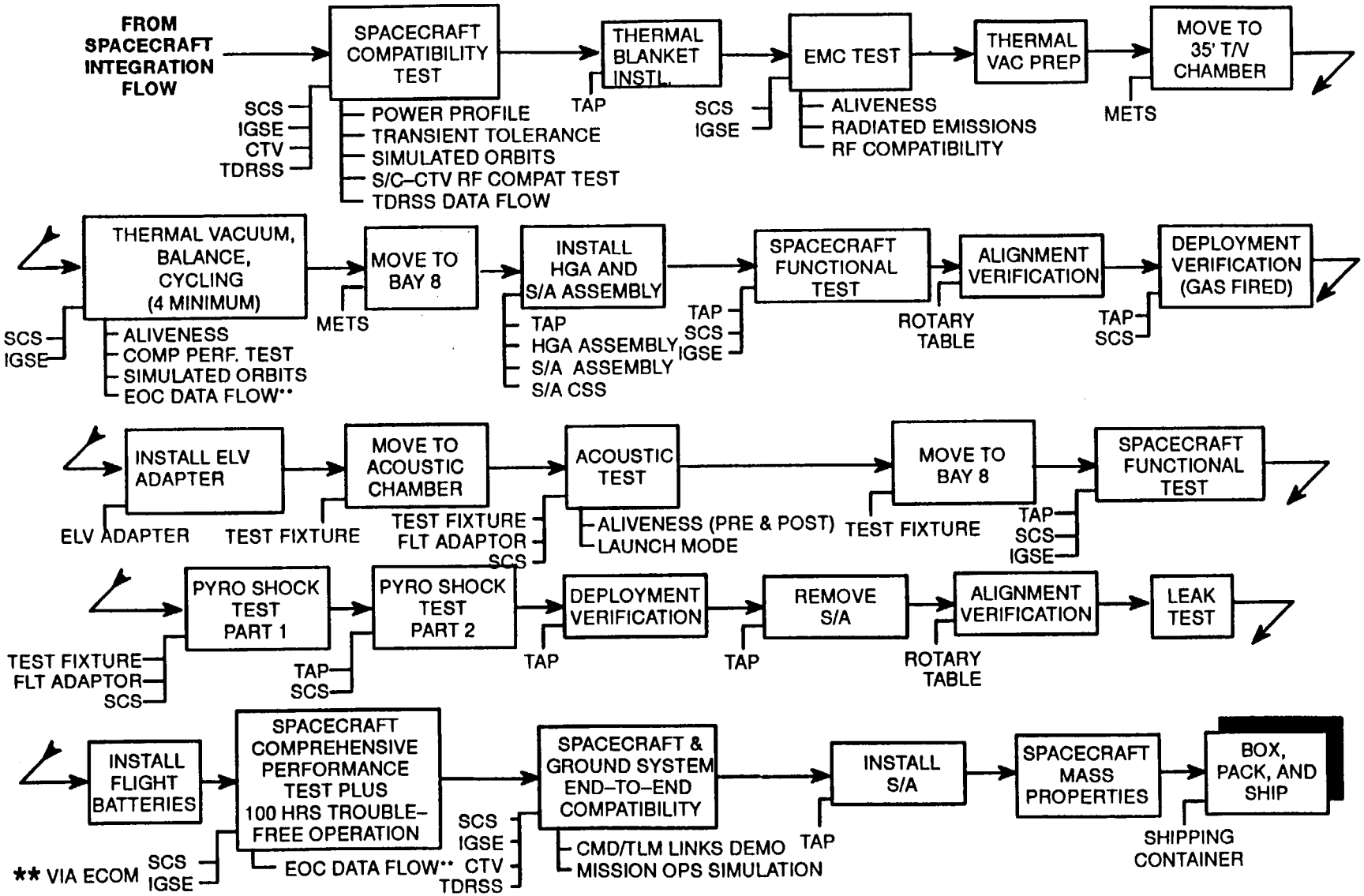

Figure 82. Spacecraft Test Flow

Spacecraft integration is performed using the Spacecraft Checkout Station. Testing during Spacecraft integration provides, in addition to increased confidence in the bus hardware, validation of the procedures and database to be used during Spacecraft testing.

15.4.3 Instrument Integration

The instrument integration process is divided into three phases of activities: pre–delivery, pre–integration and integration. Each phase will be planned in detail through the Instrument Accommodation Colloquiums. These working group meetings will be attended by MMC, GSFC and instrument provider representatives.

The pre–delivery activities focus primarily on the fabrication and delivery (to the instrument providers) of the instrument drill/alignment fixtures, test coldplate drill templates, test coldplates, test kinematic mounts and test harnesses. MMC will fabricate and deliver a drill/alignment fixture to instrument providers for instruments that are optically aligned. This fixture will provide a common tool for high accuracy placement of mounting holes on both the instrument and Spacecraft sides of the interface. The IPs will use the fixture to establish the hole pattern on the instrument.

MMC will fabricate and deliver a coldplate drill template to the ASTER and MOPITT IPs. This template will provide a common tool for the coordination and placement of a hole pattern on both the instrument and Spacecraft sides of the interface for the CPHTS coldplate. The IPs will use the template to establish the hole pattern on their instrument baseplate. MMC will also deliver test coldplate assemblies to these IPs for thermal control purposes during instrument testing.

MMC will deliver test kinematic mounts to the IPs for use during instrument testing. Finally, flight–like test harnesses will be delivered to ASTER to support pre–integration instrument testing.

Pre–integration activities include receipt and inspection of the instrument and IGSE, acceptance testing and preparation for Spacecraft integration. The receiving and inspection process officially records the arrival of the hardware at MMC and verifies that the instrument and IGSE were not visibly damaged during shipment. Bench Acceptance Testing (BAT) verifies the instrument is performing properly and is ready for integration. Preparations for integration include any modifications to the instrument configuration that are required to prepare it for installation on the Spacecraft.

All Spacecraft accommodation equipment specific to an instrument will be installed prior to the mechanical integration of that instrument. Following mechanical integration, the instrument will be aligned to the Spacecraft. This is followed by coldplate integration for MOPITT and ASTER.

Electrical integration will immediately follow the mechanical integration of an instrument. Electrical integration consists of a series of tests that ensure compatibility of all electrical Spacecraft–to–instrument interfaces and to demonstrate the proper operation of the instrument once it has been fully integrated. Electrical integration is performed in three steps. The first step is an open circuit verification to ensure a safe to mate condition. The second step is a mated test to verify proper response to power and commands. The third step is a functional test to verify proper operation of all command, data and power paths for both primary and redundant hardware.

15.5 Spacecraft Test

Spacecraft testing demonstrates interface compatibility, verifies functional performance of subsystems and instruments, characterizes Spacecraft self compatibility, demonstrates compatibility with ground and space networks, and evaluates Spacecraft performance in simulated mission environments.

The Spacecraft Comprehensive Performance Test (CPT) is a detailed verification that the Spacecraft and subsystems meet performance requirements, in all operational and contingency modes, to the extent these requirements are testable. The CPT is repeated throughout I&T and will be the primary means by which the Spacecraft's performance is trended during I&T. At a minimum, the CPT will be performed after instrument integration, during thermal vacuum testing, after environmental testing, just prior to shipment to the launch site, and at the launch site.

Compatibility testing includes self compatibility and Spacecraft–to–network compatibility tests. Self compatibility is characterized through conducted emissions tests, radiated emissions and orbital simulation tests. Conducted emissions tests characterize the effects, on Spacecraft performance, of power bus transients and component "noisy modes". Radiated emissions tests measure worst case unintentional electromagnetic radiation emanating from the Spacecraft. Orbit simulations demonstrate the ability of all Spacecraft elements to operate in science mode during a simulated mission orbit. Spacecraft–to–network compatibility tests, utilizing the Compatibility Test Van (CTV), verify RF compatibility between the EOS–AM Spacecraft, space network, and the ground network.

Spacecraft level environmental testing includes thermal vacuum, acoustic, and pyro shock environments. Thermal vacuum testing verifies the capability of the Spacecraft to meet performance specifications while subjected to predicted nominal and worst case operating conditions. The CPT will be performed during the thermal vacuum test to evaluate Spacecraft performance. Further self compatibility characterization, through orbital simulations, will occur during this test. Performance of the thermal control hardware and accuracy of analytical models will be evaluated during the thermal balance test which is performed as part of the thermal vacuum test.

The acoustic test exposes the Spacecraft to the predicted dynamic launch environment. With the Spacecraft in the launch configuration, telemetry is monitored throughout the test for any unexpected occurrences. An aliveness test will be performed before and after the test to verify no degradation to the Spacecraft has occurred.

Flight like pyro assemblies will be installed and fired for pyro shock testing. Shock response will be recorded and telemetry monitored for unexpected occurrences during the firings. Solar Array and HGA deployments will be performed before and after environmental testing to verify no degradation of performance has occurred due to the induced environments. Alignment verification will also occur before and after environmental testing to characterize environmental effects.

After environmental testing and prior to shipping, flight batteries installation, a pre–ship CPT, and final mass properties will be performed.

15.6 Environmental Test Facilities

Integration and environmental exposure facilities, shown in Figure 83, are conveniently collocated to enhance the verification process without excessive handling of the flight equipment. The Spacecraft hardware will be integrated and tested in Integration Bay 8. The SCS and IGSE will be located on the fourth floor, which overlooks Bay 8. The instrument Bench Acceptance Test (BAT) area is located next to the thermal vacuum chamber.

15.7 Spacecraft Transportation

The Spacecraft will be shipped to the launch site in the GRO (Gamma Ray Observatory) shipping container;

a. The container (with its environmental control system and transport trailer) will be flown to McGuire Air Force Base, and driven overland to East Windsor, New Jersey.

b. In a clean and protected area, the Spacecraft will be loaded into the GRO container, and prepared for transport.

c. The loaded container and support equipment will be driven overland to McGuire Air Force Base, and loaded into a NASA provided aircraft.

d. The Spacecraft and equipment will be flown to Vandenberg Air Force Base, and transported by land to the NASA Building 1610 for post–ship processing.

e. After completion of post–ship processing, the Spacecraft will be encapsulated in the Launch Vehicle fairing and transported to the SLC–3 for pre–launch processing. The encapsulated Spacecraft will be transported to the SLC–3 MST by a ground transport vehicle to be provided by the Launch Vehicle Contractor.

15.8 Launch Site Operations

Launch site activities include post shipment processing, fueling and final preparations and verification for launch. The SCS will be located in Building 836. The Spacecraft will be tested, fueled, and encapsulated in a new Building 1610 facility. Figure 84 illustrates the launch site flow.

Upon arrival at the launch site, the Spacecraft will be inspected and a propulsion system leak check will be performed.

Flight battery charging will commence following the leak check. After completion of battery charging, a comprehensive performance test will be performed to verify the Spacecraft survived transportation. The test will be a repeat of the CPT performed during Spacecraft I&T except where restricted by Spacecraft configuration. Review and analysis of the test data will occur, at the launch site, immediately following testing.

After performance testing is completed, the Spacecraft will undergo a final inspection and any mechanical closeouts that may be required (e.g., final arrangement of blankets, removal of red–tagged items, etc.). All non–flight items on the Spacecraft will be red–tagged to ensure removal prior to launch. The propulsion module will then be serviced with propellant and the Spacecraft will be installed into the launch vehicle fairing. The encapsulated Spacecraft will then be transported to the SLC–3 facility and mated to the booster.

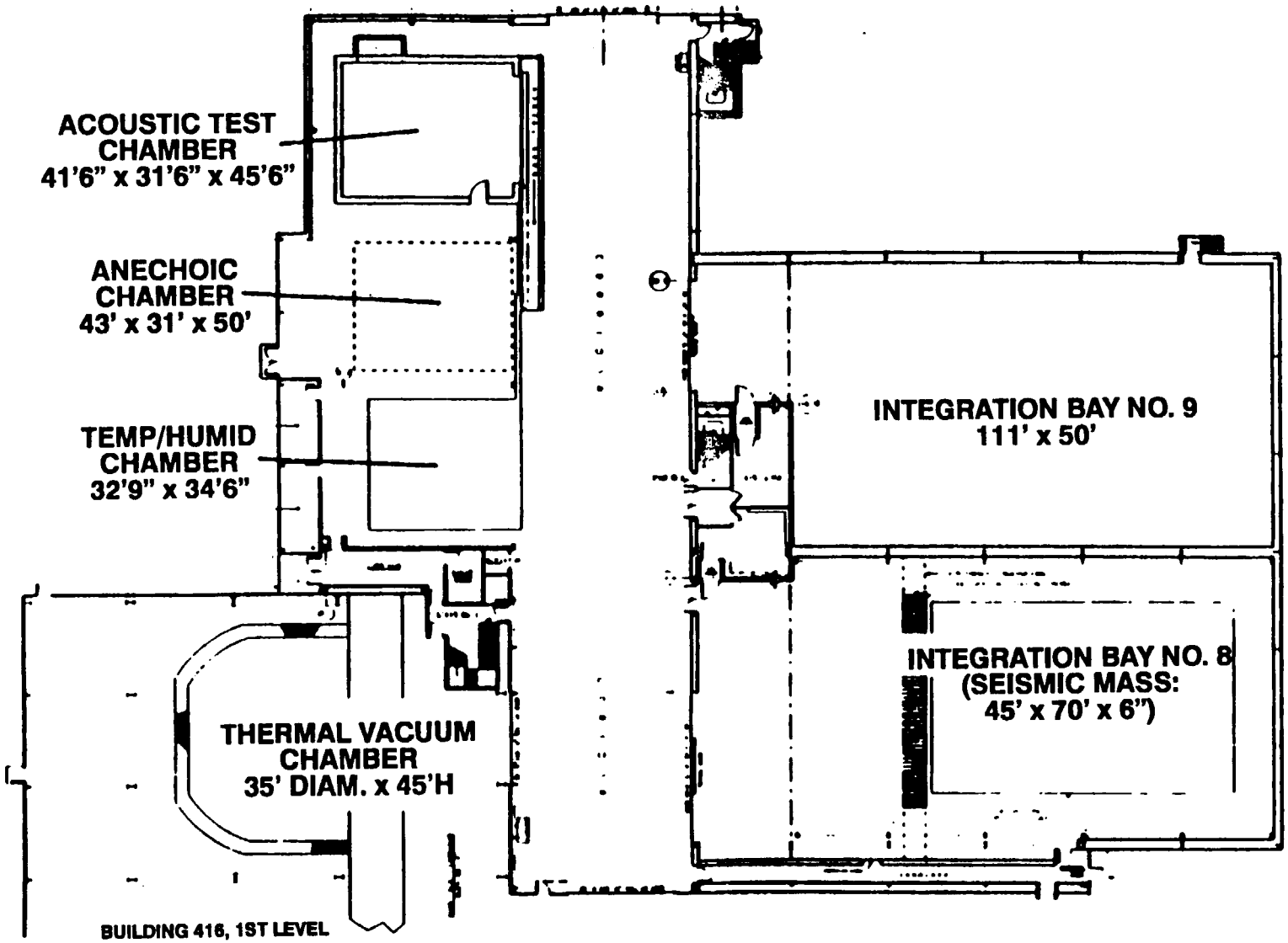

Figure 83. Martin Marietta Astro Space Environmental Test Facilities

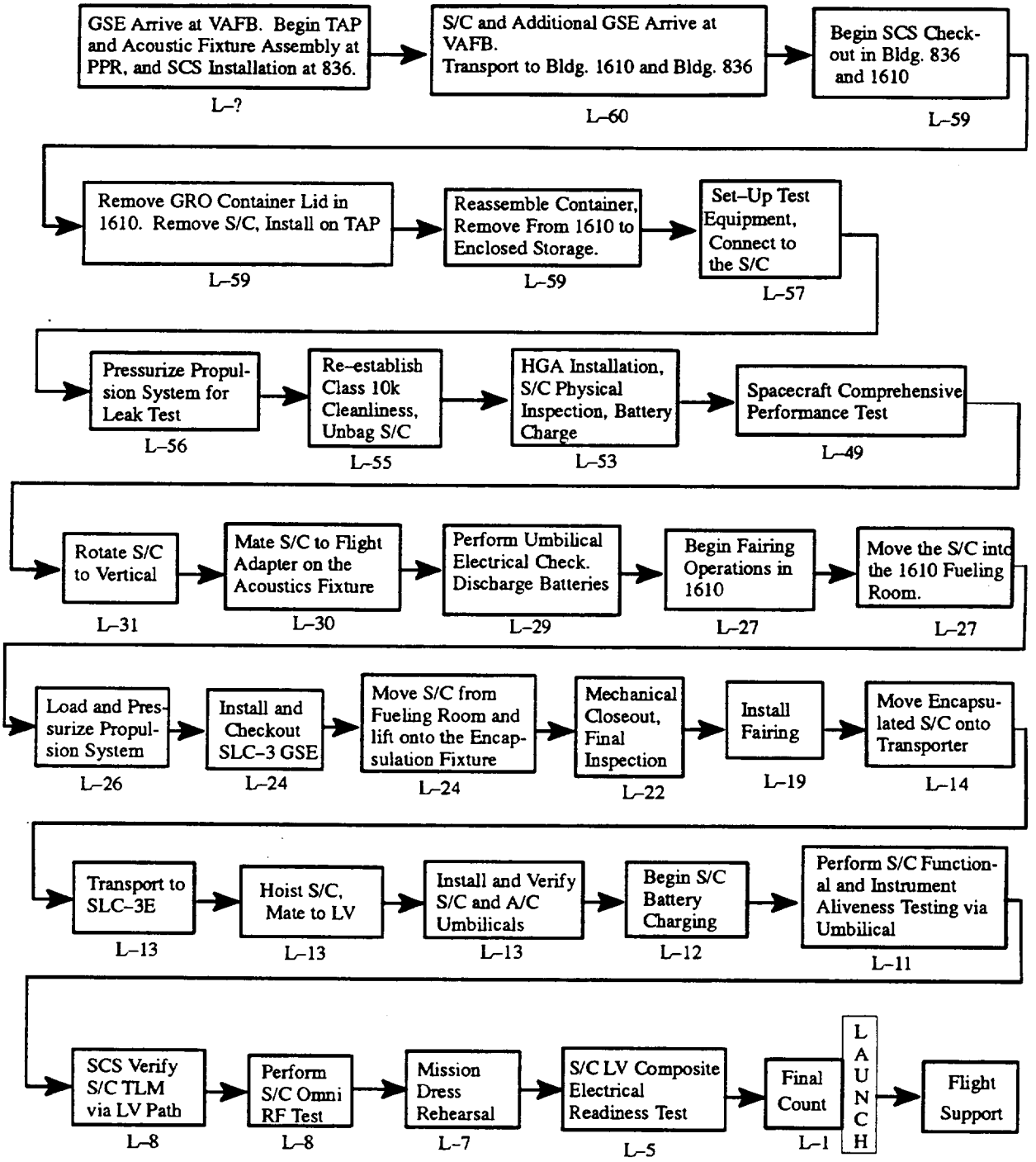

NOTE: "L–" days are calendar days prior to launch

Figure 84. Launch Site Processing Flow

Following the mate to the launch vehicle, the batteries will be charged. A composite electrical readiness test is performed to verify the Spacecraft and launch vehicle common interfaces and self compatibility between the two systems. A Spacecraft bus functional test and instrument aliveness test will then be performed to validate the command and telemetry links and to verify no damage to the Spacecraft occurred during the move to the pad. A launch day dress rehearsal will be performed to demonstrate launch readiness of the flight vehicle system and launch support organizations.

16 OPERATIONS

16.1 Mission Operations Phases

A wide variety of operations are required during various stages of the EOS–AM mission. The operations can also be described in terms of four operations phases, which are:

Operations Preparation:	Includes concept development, operations plan development, operations requirements development, procedure development, and facilities capability development.
Operations Readiness:	Includes staffing of facilities, operator training, readiness tests, launch simulations, and other prelaunch operations.
Operational Initialization:	Covers post–launch activation and checkout of Spacecraft systems and instruments.
Mature Operations:	Covers continuous Spacecraft control, Spacecraft engineering, and instruments operation.

16.2 Launch Ascent

Table XXVIII summarizes the timeline of significant events in the launch/ascent and orbit acquisition initialization phases.

The entry into Launch/Ascent Mission Phase is marked by the transition of Spacecraft systems from the Ground Test Mode to the Launch/Ascent Mode. The Launch/Ascent Mode is a lower power mode used to monitor the launch/ascent, and to ready Spacecraft systems for orbit injection. The Spacecraft operates on internal battery power and only those components essential for monitoring and transmitting Spacecraft health data, maintaining Spacecraft survival, and required for Earth acquisition maneuver, are powered at this time. Typically, instruments will be configured "OFF," with survival heaters enabled.

Entry into the Launch/Ascent Mode (from Ground Test Mode) will be at approximately five minutes prior to liftoff. Should the launch be aborted or delayed, the Spacecraft will be commanded back to Ground Test Mode, and power switched to external ground supplies.

A series of pre–programmed Spacecraft activities will occur, with no ground commanding, prior to the transition of the Spacecraft from the Launch/Ascent to the Orbit Acquisition Initialization Phase in which the Launch/Ascent Mode remains the primary system mode. Under normal circumstances, the Spacecraft will autonomously transition following separation of the Spacecraft from the launch vehicle.

Table XXVIII. EOS–AM Launch Ascent/Acquisition Timeline

EVENT	TIME REFERENCE		
Go to Internal Power	L–5	G	
Disconnect T–0 Umbilical	L–TBD	G+TBD	
Ignite Stage 0 and Liftoff (L)	L	G+5 min	
Separate Solid Rocket Motors	L+3	G+8 min	
Separate Fairing	L+4	G+9 min	
Separate LV/Spacecraft	L+15	G+20 min	S
Begin Attitude Rate Null		G+20	S
Complete Attitude Rate Null		G+30	S+10
Begin Solar Array Deployment		G+30	S+10
Complete Solar Array Deployment		G+50	S+30
Begin Earth Acquisition (roll, pitch & yaw)		G+50	S+30
Enter Eclipse		G+55	S+35
Pass First Apogee		G+65	S+45
Complete Earth Acquisition (roll, pitch and yaw)		G+65	S+45
Begin Slewing Solar Array		G+65	S+45
Exit Eclipse		G+80	S+60
Solar Array Tracks the Sun		G+80	S+60
Automatic Heater Turn On		Various	Various
Pass First Perigee (300 km)		G+110	S+90
Receive Coarse Orbit Determination from Ground		G+110	S+90
First Delta–V Burn at Third Apogee		G+245	S+225

Note: This timeline will be updated to reflect a separation altitude of 550 km.

16.3 EOS Flight Operations

The activities for performing various operational functions in support of EOS–AM flight operations are as follows:

16.3.1 Planning and Scheduling

Planning and scheduling has the objective of producing a detailed schedule for the activities of the EOS–AM Spacecraft (Spacecraft Bus and AM Instrument Set). The Flight Planning and Scheduling Group (FPSG), a segment of the Flight Operations Team (FOT), will produce the integrated Spacecraft detailed activity schedule. The planning and scheduling process includes the following three steps:

a. **A long–term mission planning phase**

   Long–term mission planning for the Spacecraft begins up to five years before the activities being planned, and produces or updates the Long–Term Science Plan (LTSP) and Long–Term Instrument Plans (LTIPs)

b. **An initial scheduling phase**

   Initial scheduling, whose primary objective is to secure the Space Network TDRSS contacts for flight operations for the target week, begins about three weeks before the target week.

c. **A final scheduling phase**

   Final scheduling produces a detailed activity schedule for the Spacecraft Bus and the instruments. This schedule forms a basis for building the stored command load and for real–time commanding of the Spacecraft. Targets of Opportunity or anomalies may interrupt the scheduled operations, requiring rapid rescheduling or the generation of commands for unscheduled activities.

The science community and the FOT will integrate science and Spacecraft information in the planning and scheduling process.

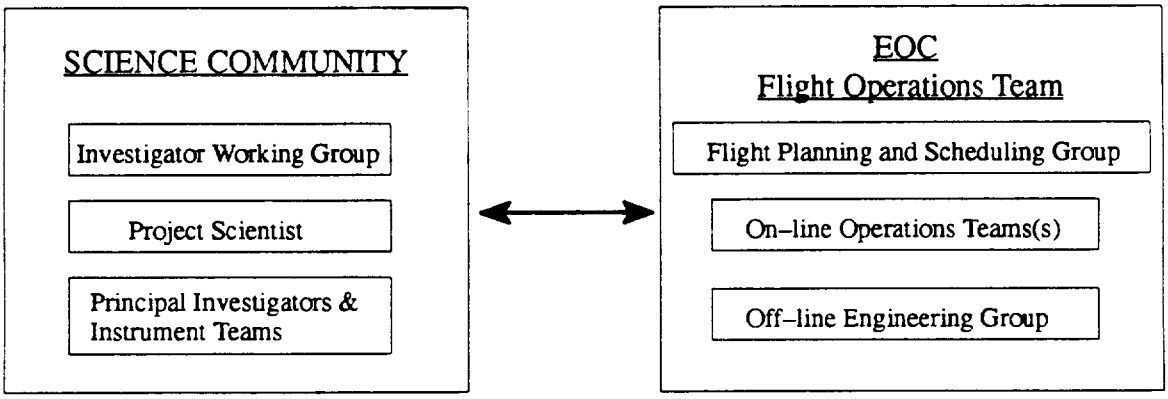

The Planning and Scheduling flow is depicted in Figure 85, and Flight Operations Manning is shown in Figure 86.

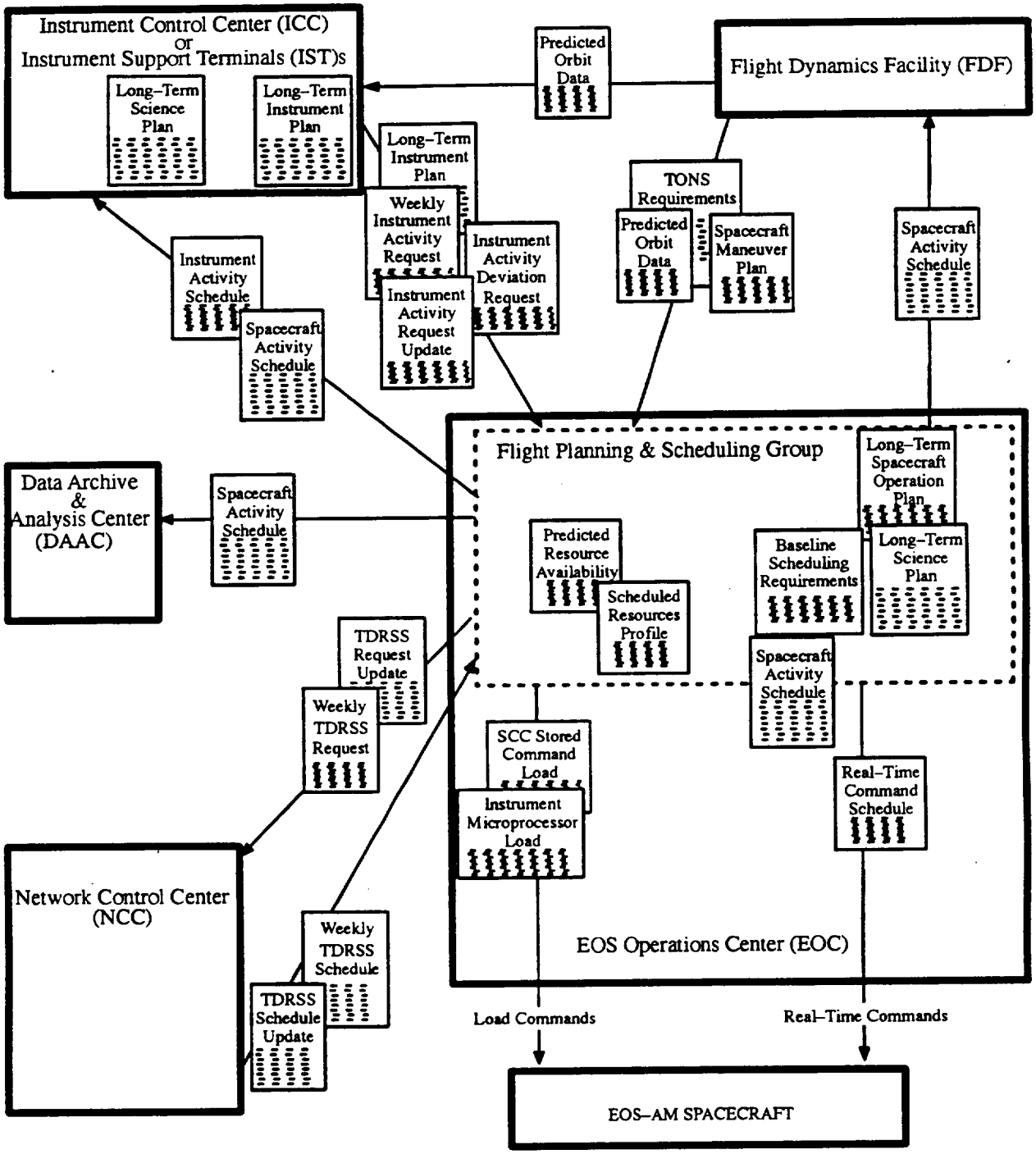

Figure 85. Planning and Scheduling Product Flow

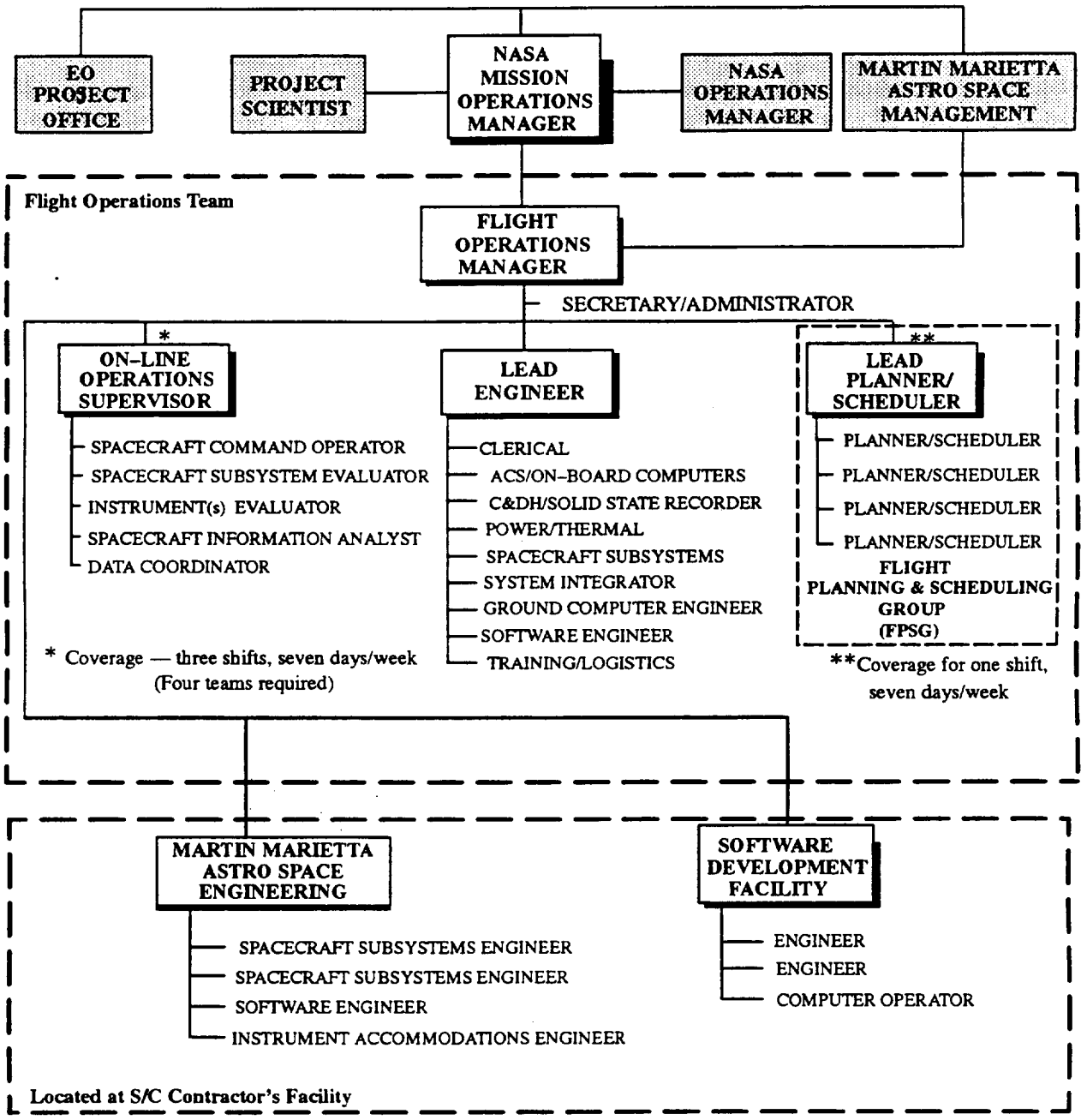

Figure 86. Flight Operations Manning

16.3.2 Long Term Planning

The project scientist produces, working with the Investigator Working Group (IWG), a long–term science plan (LTSP) for the Spacecraft. The PIs/TLs or ICC/TL produce long term instrument plans (LTIPs) for their respective instruments. The FOT uses these long–term plans to develop a long–term Spacecraft operations plan.

The IWG recommends guidelines, and overall science objectives for the Spacecraft to the Project Scientist, who defines policy. The IWG has representatives from each of the instruments. The IWG meets regularly, at least every six months (usually every three months). The LTSP presents science objectives for the Spacecraft, establishes science mission priorities to be used in later scheduling, and recommends approaches for satisfying scientific objectives. The LTSP also defines special events and specifies requirements for coordination between instruments.

The Instrument PI/TL or ICC/TL will produce the Instrument LTIP. The LTIP includes information on science priorities and long term goals for data collection. The Instrument LTIP also contains planned routine background operations for ongoing observations or operations that are related to routine calibration and maintenance activities.

The FPSG will provide Spacecraft planning and scheduling. The FPSG formulates long–term Spacecraft operations plans and keeps the IWG and the Instrument PI/TL or ICC informed of changes in Spacecraft operations, including predictions as to which, and how often, science operations will be affected by maintenance.

The long term planning information in the EOC is available to all Instrument PI/TLs and ICC to support planning and scheduling. This information includes the LTSP, the LTIPs of all of the instruments, predicted orbit information, planned Spacecraft events, and the operations plans of other instruments.

16.3.3 Initial Scheduling

Initial scheduling has the objectives of securing the required Space Network (SN) resources from the NCC. The FPSG identifies the SN resources required for Spacecraft Bus subsystem operations (e.g., TONS operations, orbit adjustment operations). Based on the baseline activity profiles, instrument activity lists, the initial schedule of ASTER activities, and activity deviation lists (if any) for the instruments, and the SN resource needs for the Spacecraft Bus subsystems, the EOC FPSG estimates on–board Solid State Recorder usage and SN resource needs and develops a TDRSS schedule request. The FPSG sends the schedule request to the NCC and negotiates with the NCC as necessary to secure the best possible SN resource allocations.

On the basis of the TDRSS schedule, the Spacecraft Bus and instrument activities required, the FPSG develops a preliminary Spacecraft activity schedule, which it makes available to all instruments. The Instrument PI/TL (via the ISTs) and ICC will have access to available scheduling information. This global information includes the plans (e.g., LTSP, LTIPs, and long–term Spacecraft operations plan), orbit information (e.g., scheduling aids from the FDF), a TDRSS schedule for the target week, and the preliminary Spacecraft activity schedule.

The Instrument PI/TL expresses changes of scheduling needs with operations requests, which contain activity deviation lists (ASTER ICC), and provides them to the FPSG. The Spacecraft Bus subsystems will undergo initial scheduling. From the long–term Spacecraft operations plan, the FPSG identifies the activities that the subsystems must perform during the target week. Based on these activities, the FPSG generates an initial activity profile. The FPSG uses the activity profile to identify the Spacecraft Bus subsystems SN resource needs.

After validation of the activity profile, the FPSG generates a TDRSS schedule request and sends it to the NCC, about two weeks before the target week. For about a week after the submission of this TDRSS schedule request, the FPSG can negotiate with the NCC for the best SN resource allocations. A week before the target week, the NCC provides the active TDRSS schedule to the FPSG. Based on the TDRSS schedule and other resource profiles, the FPSG builds a preliminary Spacecraft activity schedule for the target week.

16.3.4 Daily Planning and Scheduling

The FPSG will provide overall coordination of daily Spacecraft operations planning and scheduling activities. The Instrument PI/TL and ICC will review the daily Spacecraft operations plan. The ASTER ICC will schedule the ASTER activities consistent with the Spacecraft schedule.

Final scheduling has the objective of producing a detailed activity schedule on which commanding will be based. Final scheduling is based on the preliminary activity schedule and any new input that has been accepted since the preliminary activity schedule was developed.

The ASTER ICC may modify the initial ASTER activity schedule as long as the new schedule of activities fits within the data storage capacity allocated by the FPSG during initial scheduling. The ASTER ICC submits the final activity schedule to the FPSG for each day about three days ahead of the execution of the scheduled activities.

For other instruments, the FPSG combines the activity deviation lists, if any, with corresponding baseline activity profiles to produce instrument activity lists. The FPSG develops the Spacecraft subsystem activity list. The FPSG combines the Spacecraft subsystem activity list, and all of the instrument activity lists into a detailed activity schedule.

The FPSG can normally perform final scheduling without any input from the Instrument IST. As in initial scheduling, the Instrument PI/TL or ICC can access scheduling information.

16.3.5 Planning Aids

Planning aids (such as predicted orbit data and TDRS visibilities) which pertain to long–term and daily flight planning activities will be generated by the EOC and FDF, and will be available to the FPSG, the Instrument PI/TLs, and the ASTER ICC.

16.4 Uplink Generation

The uplink generation process translates the Spacecraft detailed activity schedule, instrument microprocessor loads, and other information to be stored onboard into Spacecraft command loads ready for uplink transmission. The Instrument PI/TLs or ICC are responsible for specifying

commands which are used to implement planned instrument operations. The ASTER ICC submits commands in mnemonic form to the FPSG about two days ahead of their execution. The FPSG will generate all Instrument control sequences which are used to implement planned instrument operations. The FPSG will also generate control sequences which are used to implement planned Spacecraft Bus operations. The Instrument PI/TLs and ICC will ensure that the Instrument commands in the command database are current and correct.

The Instrument PI/TLs and ICC will define Instrument constraint checks, constraint violation resolution ground rules, and perform checks on any necessary Instrument microprocessor load sequences.

The FPSG will coordinate the processing of Spacecraft and instrument operating schedules into uplink loads. Normally, commands for a day's operation are loaded once per day. In the event that the load of stored commands exceeds the onboard capacity, the days commands will be split into two or more loads.

Spacecraft commanding (real–time uplink commands, realtime microprocessor loads to the instruments, real–time commands to the SCC, and stored SCC commands) has the purpose of directing the Spacecraft and instruments to perform the activities as scheduled or as needed. This function has the following three major activities:

a. Normal commanding, which implements the Spacecraft Bus and instrument activities that have been specified in the Spacecraft detailed activity schedule.

b. Implementation of late changes to the scheduled course of activities as necessitated by late changes to the Spacecraft detailed activity schedule.

c. Emergency/contingency commanding required for safe operations of the Spacecraft Bus and instruments

Command associated activities also involve command data validation, command verification, onboard memory management, and command history maintenance.

Stored SCC commands generated for Instruments are typically composed of absolute time commands and Relative Command Sequence (RTS) commands. An absolute time command has associated with it a well–defined execution time. An RTS is a group of commands that can be initiated by an absolute time command, onboard fault management, or a real–time command. The use of RTSs can reduce the amount of stored command memory required for normal operations.

The FOT will uplink scheduled command loads and provide confirmation (if necessary) that the load is successful.

The FOT will uplink Instrument commands as part of the Stored Command Table load or as a Table load to the Instrument. A PI/TL or ICC may also request the FOT to initiate real–time commands. The FOT is responsible for generating, validating, and maintaining the command data for the Spacecraft Bus subsystems. The SCC software is the responsibility of the Spacecraft Bus contractor. The FDF provides the FPSG with required parameters for TONS operations and orbit adjustment operations. The FPSG incorporates the appropriate parameters into SCC–stored commands and SCC–stored Spacecraft tables.

16.5 Real-Time Operations

The Flight Operations Team is responsible for all aspects of real-time contact with the Spacecraft. The FOT, using EOC resources, will perform processing real-time telemetry data to:

a. Determine the status of various Spacecraft systems.

b. Monitor the health and safety of Spacecraft Bus subsystems and the Instruments (except ASTER).

c. Generate displays for use by the FOT

The ASTER ICC will monitor the health, safety, and performance of the ASTER Instrument. The ICC will receive real-time housekeeping data directly from EDOS and selected quick-look of recorded housekeeping data. Data quality and accounting information is provided with both data types. The ASTER ICC works with EDOS to coordinate data delivery and resolve data communication problems.

The FOT is also responsible for generating and transmitting all real-time commands, for transmitting the stored command loads, and for verifying all uplink transmissions. Some commands, that are defined by the databases as critical, require authorization by the FOT prior to uplink.

The FOT will implement the daily Spacecraft operations schedule under normal circumstances, and take appropriate action to preserve Spacecraft health and safety. The FOT may initiate a predefined safing command sequence in the event that it detects a problem which requires the sequence. The Instrument PI/TLs and ICC will define health and safety monitoring and reaction procedures for the instruments, and the Flight Operations Team is responsible for implementing these procedures.

Each Instrument PI/TL and ICC is also responsible for advising the FOT of any changes in Instrument operating characteristics, capability, or in plans for Instrument utilization which should be factored into any aspect of real-time operations. The FOT is responsible for advising the Instrument PI/TL and ICC (directly, or indirectly via the FPSG) of any departure from planned operation of the instrument.

16.6 Performance Verification

Verification of operational performance is required for all Spacecraft Bus subsystems and Instruments in order to maintain an up-to-date knowledge of Spacecraft operating characteristics, capabilities, and limitations.

Performance verification results will be used in science data analysis/evaluation and as an input to ongoing science and operational planning activities. The Instrument PI/TLs and ICC will verify all aspects of Instrument performance, and the FOT will verify the performance of Spacecraft Bus subsystems throughout the Spacecraft mission. The Software Development Facility (SDF), at the Spacecraft contractors facility, will support the FOT in verifying Spacecraft bus flight software performance relating to on-board operation. The Instrument PI/TL or ICC is responsible for

Instrument performance verification requirements. The FOT and Instrument PI/TLs or ICC will advise the EOS–AM Science Team of performance verification results which are pertinent to the planning of future mission operations.

The FOT will maintain a log of all uplink activities, which includes for each uplink activity the command data uplinked, the start and end times, and its receipt by the C&DH. The FOT, using EOC resources, will also maintain information on whether stored command data are correctly stored in the SCC memory and information on whether the SCC–stored commands are dispatched successfully to the intended destination entities. For real–time commands, the FOT will maintain information regarding command execution by the Spacecraft Bus subsystems. The FOT will verify Instrument microprocessor loads via check–sum.

Similarly, the Instrument PI/TL or ICC will maintain information on whether the stored or real–time instrument commands are successfully executed by the instruments. The Instrument PI/TL is also responsible for maintaining information on whether the instrument microprocessor loads are correctly loaded and executed.

Command histories will be maintained by the FOT and Instrument PI/TLs or ICC.

16.7 Database and Software Maintenance

The Spacecraft SCC and Instrument microprocessors will contain software and table information which are subject to in–orbit maintenance. The EOC computer system will contain a database which supports command generation, telemetry processing operations. The configuration of each software system and database will be controlled with update procedures coordinated to maintain consistency between the EOS–AM Spacecraft and ground system and between various ground system facilities.

The FOT will coordinate software and database maintenance activities to insure system–wide consistency. The SDF will have responsibility for maintaining the Spacecraft Bus flight software.

The FOT will define and verify variable–parameter modifications for the allocation of command storage memory within the SCC, and will implement SCC flight software and database modifications.

The Instrument PI/TL will maintain all microprocessor software and database contents for the Instrument.

The FOT will maintain Spacecraft Bus subsystem parameters within the EOC database and the core definitions of all individual commands within the EOC systems. The FOT will also maintain the core definition of all downlink telemetry functions within the EOC database for which EOC processing of any type is required. The Instrument PI/TL and ICC will provide the parameter values which define all Instrument commands and telemetry functions (e.g., serial magnitude commands having specific bit patterns or variable sub–fields; telemetry functions contained within an instrument–controlled format structure). The Instrument PI/TLs or ICC will also define all other ground system database information updates which relate to the instruments (i.e., command sequences, resource usage, safing sequences, activity definitions, telemetry calibration data, limit–check threshold levels, derived function definitions, display formats).

The EOSDIS Core System contractor will implement the associated database modifications. The FOT is required to remain cognizant of database content and status within the EOC. The FOT will interact with the Instrument PI/TLs and ICC to implement any database updates which are pertinent to the instruments. The ECS contractor will provide the database manager software for the EOC database

16.8 Early Orbit Flight Operations

The early orbit operations activities for performing various operational functions in support of flight operations are understood to be as follows:

16.8.1 Launch Ascent – Orbit Acquisition Mission Phases

The PI/TLs and ICC will define any command sequences, EOC displays, and contingency procedures which should be are needed to assure the health of all Instruments during Launch Ascent and through the Orbit Acquisition phase. The launch vehicle places the Spacecraft into the injection orbit, and the Spacecraft will sense separation from the Launch vehicle. Telemetry data will be relayed from the Vandenberg Tracking Facility and the Advanced Range Instrumented Aircraft (ARIA) to the EOS Operations Center throughout the launch. The Flight Operations Team will perform the following Launch Ascent Phase activities:

a. Monitor Spacecraft Bus housekeeping telemetry (Launch/Ascent specific display sets).

b. Monitor and verify Spacecraft Bus operating mode.

c. Monitor and verify Spacecraft Bus resources.

d. Verify stored commands execution.

e. Spacecraft scheduling and planning.

During the Orbit Acquisition Initialization phase, a positive Spacecraft energy balance and an S–Band communications link is established. A stable earth–oriented attitude is attained and an onboard orbit estimate is obtained.

The Flight Operations Team will control the Spacecraft and will perform the following Orbit Acquisition Phase activities:

a. Monitor Spacecraft Bus housekeeping telemetry (phase specific display sets).

b. Monitor and verify Spacecraft Bus operating mode.

c. Monitor and verify Spacecraft Bus resources.

d. Verify stored commands execution.

e. Verify Earth acquisition.

f. Verify Solar Array deployment and solar tracking.

g. Verify High Gain Antenna deployment.

h. Verify command and control capability.

i. Spacecraft scheduling and planning.

During the Orbit Acquisition phase, the Spacecraft will perform a series of delta–V maneuvers (significant change in velocity vector). The FDF and FPSG will calculate burn parameters, plan the delta–V maneuvers, calculate the required firings, schedule, and perform the maneuvers. Figure 87 shows an activity flow.

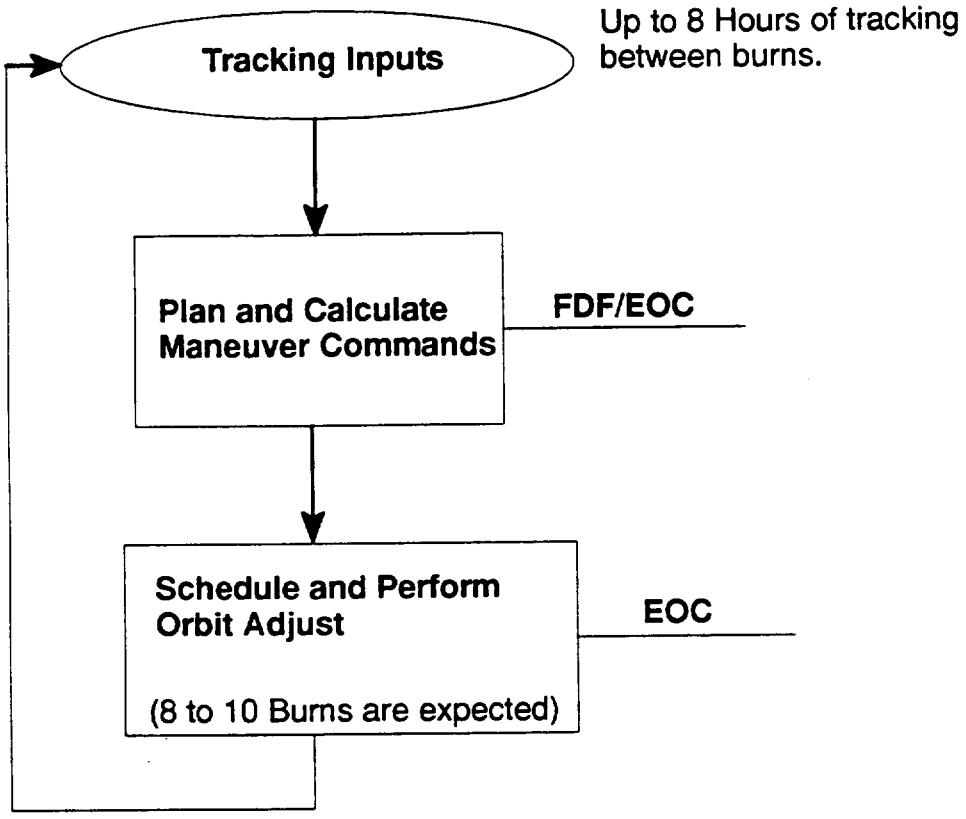

Figure 87. Delta–V Activity Flow

16.8.2 Activation

Spacecraft activation follows the launch through Orbit Acquisition phases, and leads into orbital mission operations. Most activation events will occur over a period of several weeks during the Operational Initialization phase. The Instrument PI/TLs and ICC will develop the Instrument activation plans, and provide the Instrument contribution to the initial Spacecraft activation plan. The FOT will provide the Spacecraft Bus activation plans and procedures. The Instrument PI/TLs or designated representative(s) will be present in the EOC during each Instrument activation event and will have direct responsibility for Instrument activation procedures within the EOC. The FOT

will support the Instrument PI/TL or designated representative(s) in implementing instrument activation procedures, and will coordinate initial Instrument operations with other Spacecraft Bus and AM instruments activation events throughout this phase of operation. The Flight Operations Team will be responsible for the activation and checkout of the Spacecraft subsystems and the following activities:

a. Monitor Spacecraft Bus housekeeping telemetry.

b. Monitor and verify Spacecraft Bus operating mode.

c. Monitor and verify Instrument health and safety data.

d. Coordinate the Instrument operations with the Instrument Team or ICC.

e. Monitor and verify Spacecraft Bus resources.

f. Spacecraft scheduling and planning.

g. Stored command table loads.

h. TDRS and EOS–AM Spacecraft ephemerides load.

i. Instrument microprocessor loads (if required).

j. Memory dump verification (if required).

k. Verify stored commands execution.

l. Coordinate the Flight Dynamics Facility data inputs to the EOC for required Delta–V operations and TDRSS On–board Navigation System (TONS).

m. Verify SSR status and management initialization (normal operation).

n. Spacecraft and Ground Systems operational phase readiness verification and turn–over to the Spacecraft mature operations.

16.8.3 Transition to Orbital Operations

After the EOS–AM Spacecraft Bus and instruments are fully activated, Spacecraft operations will transition into the Operational mission phase. When this occurs, the normal daily flight operations planning and scheduling process will begin along with normal ground system operations.

The FPSG will use the Instruments baseline activity profile and the initial ASTER activity schedule, unless an operations request containing an activity deviation list is received, to generate instrument activity lists.

16.9 Spacecraft Maneuvers

Several types of maneuvers will be executed by the Spacecraft at predefined points throughout the EOS–AM mission. A nominal long–term schedule of maneuver events will be available prior to launch, and will be maintained current along with other long–term planning information. The

EOS–AM Science Team will be responsible for factoring the maneuver schedule into the long term science plan, and for establishing overall compatibility between this schedule and planned science operations. The FOT will maintain maneuver schedule currency, and for notify the EOS–AM Science Team (via the Project Scientist) of maneuver schedule changes.

The FOT has responsibility for all maneuver operations. The FOT and FDF are jointly responsible for the detailed planning of each Spacecraft maneuver and the FOT is responsible for maneuver execution. For orbit adjust maneuvers, the FDF will develop plans for corrective firings of the orbit adjust system and provide planning aid and operational data updates to reflect maneuver results. The FPSG will coordinate with the FDF to schedule specific maneuver events consistent with long term science plan intent and will scheduling instrument operations to accommodate maneuver implementation. The Instrument PI/TLs and ICC are responsible for defining all maneuver accommodation requirements (including special command sequences, EOC displays, etc.) for the instruments, for reviewing the maneuver operational plans, and for advising the FOT, as appropriate, of any concerns regarding these plans.

16.10 Contingencies

In the event that a Spacecraft emergency situation develops, the FOT will be responsible for taking appropriate action to preserve Spacecraft health and safety. The FOT will request emergency TDRSS support from the NCC. If TDRSS cannot be used or is not available, the NCC will work with the DSN, GN, WOTS for support. The FOT will utilize the emergency support, as available, to establish a safe Spacecraft configuration. First priority will be given to mission critical functions (i.e., communications, power, attitude control), and then to establishing a safe configuration for the EOS–AM instruments and other Spacecraft Bus subsystems.

The Instrument PI/TLs and ICC are responsible for defining the safe/survival configuration(s) for the instruments, and the command sequences necessary to establish that configuration. If the Spacecraft enters Safe Mode or Survival Mode, the FOT is responsible for verifying/establishing a safe configuration for each instrument and Spacecraft Bus subsystem. The FOT will notify the Instrument PI/TLs and the ASTER ICC that the Safe Mode or Survival Mode has interrupted normal operation, and of the resulting instrument status. Each Instrument PI/TL or ICC is responsible for advising the FOT of any need for further priority attention to the instrument. The Instrument PI/TL or ICC will also define any reactivation procedure to be followed in restoring normal instrument operation. The FOT will implement all Safe Mode or Survival Mode reaction and recovery operations. These actions will include:

a. Initiate the appropriate contingency procedure.

b. Recover and analyze stored housekeeping/health and safety data from the on–board Solid State Recorder (if possible).

c. Notify the Instrument PI/TL or ICC to coordinate actions that may have or will occur which relate to instrument operation.

d. Notify cognizant engineering and management personnel.

e. Request appropriate institutional support.

f. Analyze associated telemetry data available for problem isolation.

g. Initiate a corrective action plan if applicable.

h. Continue to monitor real–time telemetry if available, and log all events.

For instruments other than ASTER, the FOT will notify the PI/TL in the event an instrument health or safety incident is discovered by the Flight Operations Team. The FOT will follow predefined instructions as prescribed by the Instrument PI. The FOT will have available and maintain a set of safing commands provided by the PI. The Instrument PI/TL will be responsible for evaluating the incident and advising the FOT of instrument status and plans for resuming operations.

The ASTER ICC monitors the status of that instrument. If an anomaly is discovered, the ASTER ICC will notify the FOT. The FOT will request any additional institutional and coordinates any Spacecraft bus operations in support of ASTER anomaly investigation or recovery procedures. The ICC may specify real–time commands for transmission to the instrument.

The FOT will coordinate with the PI/TLs or ICC to re–establish the continuity of planned science operations, as defined in the Spacecraft activity schedule, once the Spacecraft has been returned to a normal operating configuration.

The Instrument PI/TLs and ICC will define all health and safety telemetry parameters and EOC monitoring criteria for the instruments, and the procedures to be followed by the FOT should a Instrument health and safety incident occur. The FOT will perform predefined monitoring and response procedures, consulting with the Instrument PI/TL or ICC regarding instrument status, and further response actions which might be appropriate.

The FOT will advise the PI/TLs or ICC of Instrument status regarding operational planning activities which are currently underway and the FOT is responsible for adjusting ongoing plans for Instrument operations to accommodate the situation at hand (in coordination with the Instrument PI/TLs or ICC). Each Instrument PI/TL or ICC is responsible for defining command sequence, EOC procedure and any other modifications necessary to reflect changes in Instrument operational capability or status whenever necessary throughout the EOS–AM mission.

17 OPERATIONAL GROUND FACILITIES

These facilities are to be developed for use within the Spacecraft support ground system. The two ground system facilities are the Spacecraft Analysis System (SAS) and the Spacecraft Simulator (SSIM).

17.1 Spacecraft Analysis System (SAS) Software

The SAS software is to be used for support of Spacecraft analysis and sustaining engineering. It also supports updates to the engineering database and collection and organization of processed Spacecraft housekeeping telemetry. A description of the SAS capabilities is as follows:

a. Operations Analysis – The capability to perform traditional satellite operations support tasks such as trend analysis, critical parameter evaluation, and accumulation of performance statistics.

b. Anomaly Resolution Support – Support to the EOS Operation Center (EOC) is provided for problem detection, fault isolation, and implementation of solutions.

The computer provided by the EOC plays host to the SAS software analysis tools and data. Operations analysis tools such as statistical analysis, curve fitting and subsystem performance evaluation are provided.

If an anomaly is diagnosed, the operators may use the analysis tools along with the SSIM simulator to recreate and analyze the flight events. Potential remedies to the anomaly can be tested on the Spacecraft Simulator if the failure condition can be simulated.

The EOC provides the SAS with Spacecraft telemetry that is required for processing. Orbit, attitude, and uplink data are also provided. Both current and historical data may be retrieved for use in performance analysis. Data required for problem resolution can be provided to Spacecraft specialists located at the contractor plant to support anomaly resolution.

A preliminary diagram of the SAS and its interfaces is shown in Figure 88.

17.2 Spacecraft Simulator (SSIM)

The Spacecraft Simulator (SSIM) is a Spacecraft Ground System element located at the Goddard Space Flight Center (GSFC). It provides operational support to the EOC. Its functions and interfaces are illustrated in Figure 89. The capabilities resident in the SSIM are described below:

a. Testing of flight software loads and databases

b. Generation and verification of operational procedures

c. Training of EOC operators

d. Anomaly resolution support.

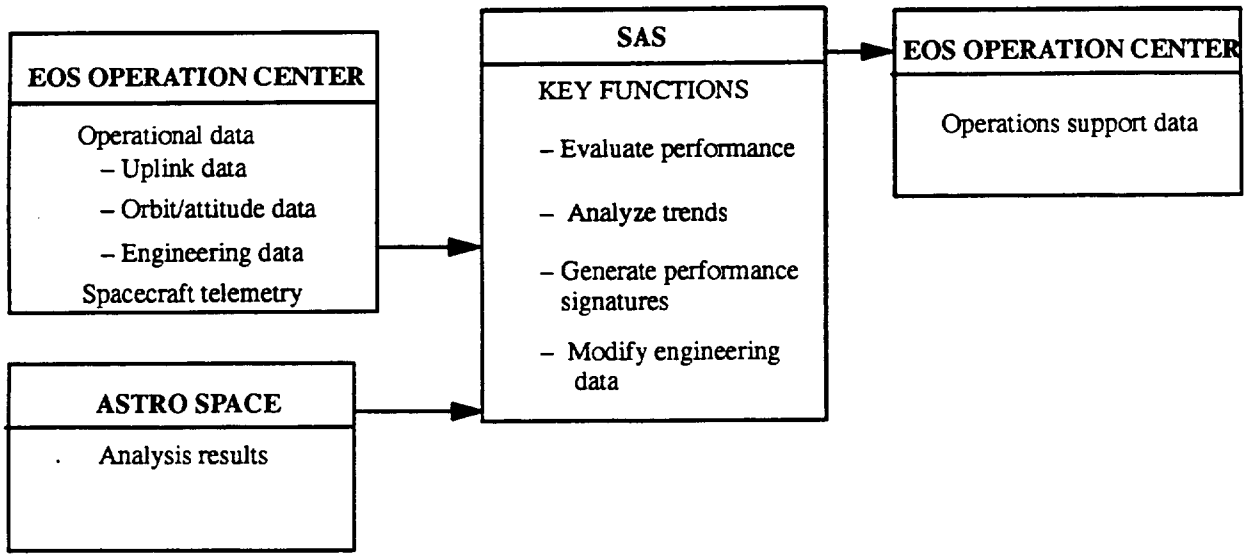

Figure 88. Spacecraft Analysis System Block Diagram

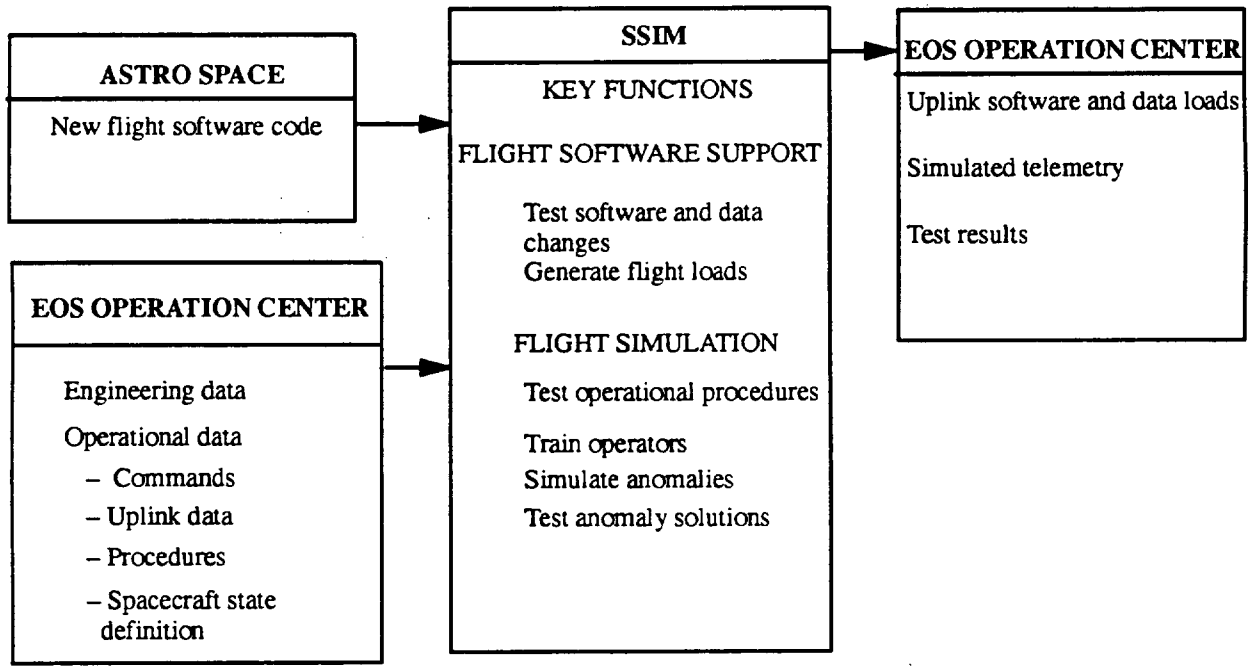

Figure 89. Spacecraft Simulator Block Diagram

The simulator consists of data processing hardware and software. An engineering test version of the Spacecraft processor serves as the host for flight software. Spacecraft simulation software executes on general purpose computer equipment. The simulation software mimics the flight environment external to the Spacecraft C&DH system by receiving Spacecraft commands, modelling sensors, effectors and Spacecraft dynamics, and generating telemetry. A video display terminal (VDT) is available for simulator control and execution monitoring.

A Local Area Network (LAN) connects the SSIM with the EOC. Simulator input and output is exchanged during training sessions. This link may also be used to provide the EOC with software and data up–load files. Access to the PSCN is provided for exchanging software between the SSIM and Astro Space Software Development Facilities.

Spacecraft operators may use the SSIM to test Spacecraft commands and software, and execute integrated training sessions. Trainees use EOC consoles and the actual Spacecraft test and operations command language utilized by the Spacecraft operators, while interacting with the simulator.

MARTIN MARIETTA

EOS

DESIGN NOTE SUMMARY

DN#: EOS-DN-SE&I-001 **Revision:** B **Date:** 5/21/93

Title: System Operating Modes

Author: H. Bond **Source ID (ESTA, PD, Memo, etc.):**

Purpose/Questions Answered:

Define System Operating Modes by specifying: (a) key functional and performance requirements in each mode; (b) established criteria for transitioning between modes; and (c) the provision of system resources to Instruments for each mode.

Summary/Answers:

This revision was updated to reflect the current EOS-AM Spacecraft baseline for Spacecraft PDR (September 1993). A new mission operating mode, Launch/Ascent Mode, has been created to cover the period from go to internal power until the Spacecraft accomplishes earth acquisition, solar array deployment, S-band communication link acquisition, and high gain antenna deployment. Because the Spacecraft operational configuration and power consumption during these early mission activities are different than the configuration during Survival Mode, Launch/Ascent Mode was defined to be the primary mode during the Launch/Ascent and Orbit Acquisition Initialization Phases.

Recommendations: (Be Specific)	Accepted	Rejected	Baselined	Date
Requirements to be reviewed by System/ Subsystem Engineering and incorporated in design concepts and all appropriate specifications				

Open Items/Action Required	Responsible Person	Due Date

Comments

EOS Form 007-2/91

Form Completed By Harold E. Bond **Date** 5/21/93 **Page** ii **of** 78

MARTIN MARIETTA

EOS

EOS–DN–SE&I–001
Rev. B

DESIGN NOTE

TITLE: System Operating Modes

AUTHOR: H. Bond

AUTHOR'S MANAGER: S. Carey DATE 5/24/93

SE&I MANAGER: S. Carey DATE 5/24/93

CHIEF ENGINEER: D. Longcoy for Dennis Longcoy DATE 93-05-28

LETTER	REVISIONS DESCRIPTION	DATE	AUTHOR
	Initial Release	7/16/90	D. Linder/ S. Pergament
A	Update document to EOS–AM baseline.	5/15/92	W. Tebay/ F. Rene
B	Update document to baseline at EOS–AM Spacecraft PDR.	5/21/93	H. Bond

TABLE OF CONTENTS (Continued)

SECTION / PARAGRAPH	TITLE	PAGE
3.4.4.3	Operational Phase Delta-V Mode Operations	45
3.5	Science Mode	47
3.5.1	Functional Overview	47
3.5.2	Entry/Exit	47
3.5.3	Minimum Subsystem Requirements	48
3.5.4	Science Mode Operations	49
3.6	Survival Mode	49
3.6.1	Functional Overview	49
3.6.2	Entry/Exit	50
3.6.3	Minimum Subsystem Requirements	51
3.6.4	Survival Mode Operations	51
3.6.4.1	Survival Mode as Primary Mode	51
3.6.4.2	Survival Mode as Backup Mode	51
3.7	Safe Mode	52
3.7.1	Functional Overview	52
3.7.2	Entry/Exit	53
3.7.3	Minimum Subsystem Requirements	55
3.7.4	Safe Mode Operations	56
3.8	Instrument Accommodation	57
3.8.1	Instrument Operating Modes	57
3.8.2	Instrument Mode Transitions	57
3.8.3	Correspondence Between Instrument and Spacecraft Operating Modes	58
3.8.4	Resources Provided to Instruments in Each Spacecraft Operating Mode	59
3.8.4.1	Ground Test Mode	59
3.8.4.2	Launch/Ascent Mode	59
3.8.4.3	Standby Mode	60
3.8.4.4	Delta-V Mode	60
3.8.4.5	Science Mode	61
3.8.4.6	Survival Mode	61
3.8.4.7	Safe Mode	61

TABLE OF CONTENTS

SECTION / PARAGRAPH	TITLE	PAGE
1	SUMMARY	1
2	OPERATING MODES OVERVIEW	2
2.1	Mission Phases and Operating Modes	2
2.2	Mode Architecture	11
2.3	Mode Transition Overview	11
3	SYSTEM MODE REQUIREMENTS	30
3.1	Ground Test Mode	30
3.1.1	Functional Overview	30
3.1.2	Entry/Exit	30
3.1.3	Minimum Subsystem Requirements	31
3.1.4	Ground Test Mode Operations	32
3.2	Launch/Ascent Mode	32
3.2.1	Functional Overview	32
3.2.2	Entry/Exit	33
3.2.3	Minimum Subsystem Requirements	34
3.2.4	Launch/Ascent Mode Operations	36
3.3	Standby Mode	36
3.3.1	Functional Overview	36
3.3.2	Entry/Exit	36
3.3.3	Minimum Subsystem Requirement	38
3.3.4	Standby Mode Operations	39
3.4	Delta–V Mode	40
3.4.1	Functional Overview	40
3.4.2	Entry/Exit	41
3.4.3	Minimum Subsystem Requirements	42
3.4.4	Delta–V Mode Operations	43
3.4.4.1	Orbit Acquisition Phase Delta–V Mode Operations	43
3.4.4.2	Operational Initialization Phase Delta–V Mode Operations	44

LIST OF FIGURES

FIGURE	TITLE	PAGE
1.	Spacecraft Mission Phases	2
2.	Prelaunch Mission Phase	13
3.	Launch Mission Phase	14
4.	Orbit Acquisition Initialization Mission Phase	15
5.	Orbit Acquisition Mission Phase	18
6.	Operational Initialization Mission Phase	20
7.	Operational Mission Phase	24
8.	End–of–Mission Phase	28

TABLE OF CONTENTS (Continued)

SECTION / PARAGRAPH	TITLE	PAGE
3.9	System Performance Requirements	63

LIST OF TABLES

TABLE	TITLE	PAGE
I.	Definitions of State Variables	4
II.	N/A System State Variable Combinations	5
III.	EOS–AM System State Derivation	6
IV.	EOS–AM Operating Mode Definitions	10
V.	Spacecraft System Modes	11
VI.	Ground Test Mode Transition	31
VII.	Launch/Ascent Mode Transition	34
VIII.	Standby Mode Transition	37
IX.	Standby Mode Transition Elements	40
X.	Delta–V Mode Transition	42
XI.	Science Mode Transition	48
XII.	Survival Mode Transitions	50
XIII.	Survival Mode Transition Elements	52
XIV.	Safe Mode (Level 0)	55
XV.	Safe Mode Transition Elements	56
XVI.	Instrument Operating Modes Mapped Into Spacecraft Operating Modes	59
XVII.	Resources Provided to the Instruments in Each Spacecraft Operating Mode	64
XVIII.	System Modes, Resources, Entry Conditions, and Services	67
XIX.	EOS AM Key Performance Requirements (Minimum Capability)	68
XX.	Communication Link Utilization (Minimum Capability)	69
XXI.	Power Resource Allocation (Nominal)	70

1 SUMMARY

This document defines system-level operating modes for all mission phases, including Prelaunch, Launch/Ascent, Orbit Acquisition Initialization, Orbit Acquisition, Operational Initialization, Operational, and End-of-Mission Phases. Any phases (along with associated modes and activities) prior to Prelaunch Phase are not considered mission phases and are not addressed herein. This document defines the following for each mission operating mode: (a) key functional and performance requirements; (b) derived power budgets; (c) established criteria for transitioning between operating modes; and (d) the provision of system resources to Instruments for each mode. The objective of this design note is to define and specify each system-level operating mode sufficiently in order to (1) facilitate design engineers' analysis of all mission scenarios; (2) provide a basis for operations planning; and (3) provide to the Instrument Providers information on all Spacecraft operating scenarios.

The operating modes are defined by the minimum functional and performance capabilities that are required to satisfy mission conditions and constraints. The modes described in this document are "system" modes from which subsystem modes and component modes can be derived. The requirements derived in this document will be incorporated into the Spacecraft Bus' hardware and software design concepts.

This revision (Rev. B) to the System Operating Modes design note defines a new mode called Launch/Ascent Mode. The need for a new mode became evident with the refinement of power requirements during the early mission when the Spacecraft accomplishes earth acquisition, solar array deployment, high gain antenna deployment, and S-band communication link acquisition. Because the Spacecraft operational configuration and power consumption during these early mission activities are different than the configuration during Survival Mode, Launch/Ascent Mode was defined to be the primary mode during the Launch/Ascent and Orbit Acquisition Initialization Phases. This mode is discussed in more detail in Section 3.2.

2 OPERATING MODES OVERVIEW

2.1 Mission Phases and Operating Modes

The EOS mission can be defined by seven chronological mission phases: (1) Prelaunch, (2) Launch/Ascent, (3) Orbit Acquisition Initialization, (4) Orbit Acquisition, (5) Operational Initialization, (6) Operational, and (7) End-of-Mission. Each mission phase represents a pre-defined time period during which a set of interrelated operations and activities are performed. Figure 1 provides a top-level description of the EOS mission phases.

Each mission phase is characterized by the "system" operating modes used (or available) to support that mission phase. The system mode is defined by the minimum functional and performance capabilities that are required to satisfy mission conditions and constraints. System modes include (1) Ground Test Mode, (2) Launch/Ascent Mode, (3) Standby Mode, (4) Science Mode, (5) Delta-V Mode, (6) Survival Mode, and (7) Safe Mode.

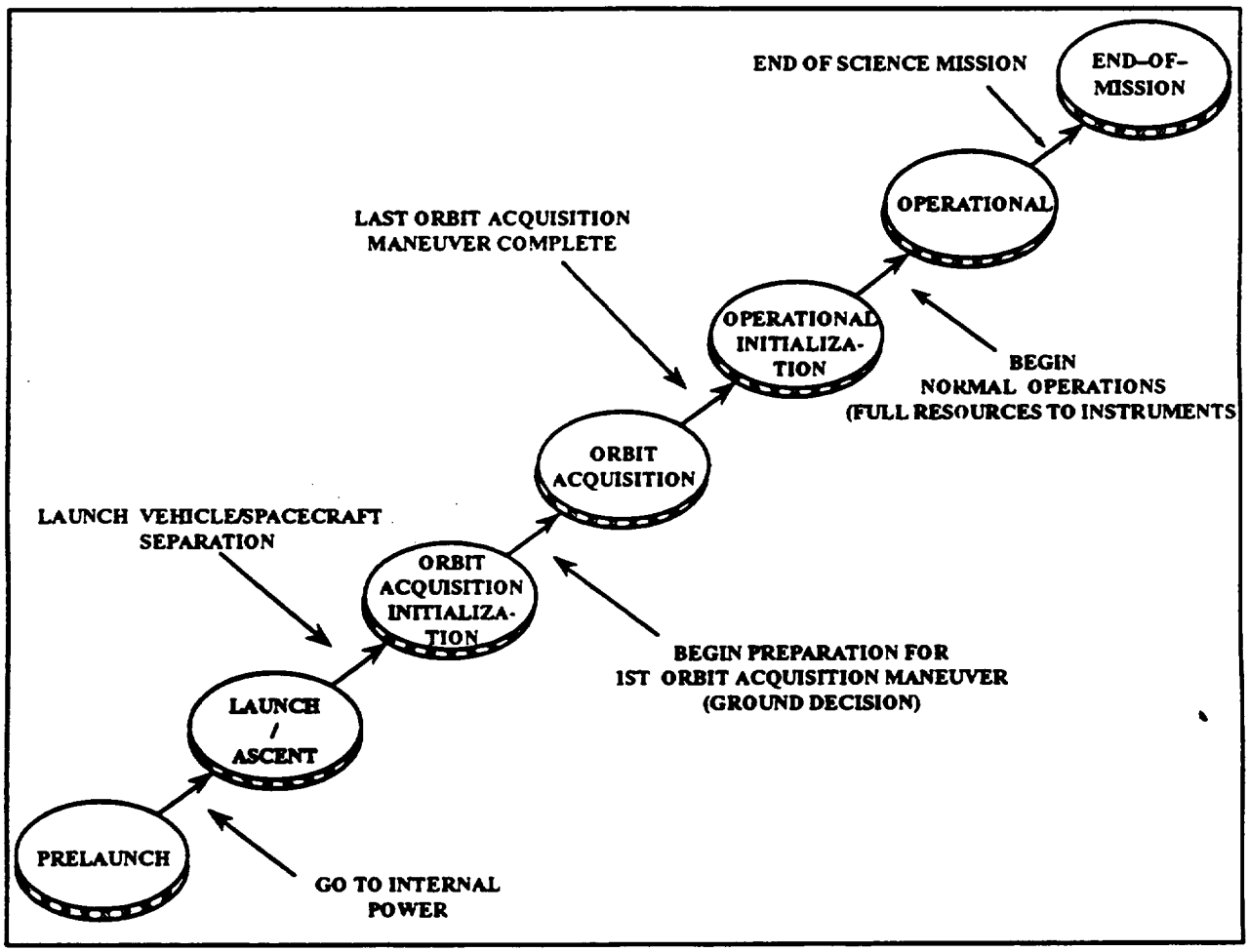

Figure 1. Spacecraft Mission Phases

The system operating modes were defined by combining five state variables (see Table I) which were chosen to represent system parameters which are essential to defining worst case operational scenarios for the Spacecraft. The set of all possible combinations of these five state variables consists of 48 permutations; however, not certain combinations are not applicable, as explained in Table II , and can be eliminated. Table III lists the complete state derivation (i.e. all 48 permutations) and defines the system mode corresponding to all applicable combinations of state variables. Table IV lists only those combinations which comprise valid system states. Science Mode, Standby Mode, and Survival Mode each have only one combination of state variables which applies. However, there are more than one combination of state variables for Safe and Delta-V Modes. Safe Mode has nine possible sub-modes, and Delta-V has three.

Table IV also lists Ground Test Mode and Launch/Ascent Mode, two system modes which are not defined by state variables in the method explained above. Ground Test Mode is used during the Pre-Launch Phase when the Spacecraft has no relevant attitude control. Launch/Ascent Mode is used during the Launch/Ascent and Orbit Acquisition Initialization Phases. When the Spacecraft enters this mode, it has no relevant attitude control orientation because it is in the launch vehicle fairing.

A mission phase typically contains more than one system operating mode. The Operational Mission phase, for example, includes the Science Mode, Delta-V Mode, Standby Mode, Survival Mode and Safe Mode. At any given time during a specific mission phase, only one of the system modes available to that phase is in effect. In addition, a particular operating mode may be used during the different mission phases. The Spacecraft Bus' Safe Mode can be used in any mission phase with the exception of Prelaunch and Launch/Ascent. Primary system operating modes are defined as scheduled or planned operating modes for that mission phase. Back-up system modes are unplanned modes that are entered following an anomaly. Examples of primary mission modes include Science and Delta-V modes, while examples of back-up modes include Survival and Safe modes.

Table V correlates mission phases with system operating modes. The types of system modes used during a particular mission phase are based on the activities required during that phase. The functional and performance requirements for system operating modes and criteria for mode transitions are described in Section 3.

Table I. Definitions of State Variables

State Variable	Possible Conditions	Definition
Power Load	OFF	Shed loads to minimum housekeeping and instrument power condition – (Power Critical Condition)
	ON	Housekeeping equipment and instruments are at the full power allocated for the mode – (Full Power Condition)
Computer	ACE	ACE (including SHDP) controls attitude; no SCC control
	ACE/SCC	ACE controls attitude; SCC controls all housekeeping functions except attitude
	SCC	SCC has full control of all housekeeping functions, including Spacecraft attitude
Delta-V	NO	No Delta-V maneuver (Attitude control (ACS) thrusters may be used)
	YES	Delta-V maneuver
Attitude	SUN	Sun pointing attitude
	EARTH	Earth pointing attitude
Science Data	NO	Spacecraft unable to collect, distribute, or transmit science data
	YES	Spacecraft performs science data collection, distribution, & transmission

ACE = Attitude Control Electronics

SCC = Spacecraft Controls Computer

SHDP = Safe Hold Digital Processor

Table II. Mutually Exclusive System State Variable Combinations

System State	Comment
ΔV/SUN	ΔV maneuvers with sun pointing are not feasible (although ACS thrusters may be used)
ΔV/ACE	ΔV maneuvers with attitude control via the ACE are not planned (although ACS thrusters will be controlled by the ACE)*
SCC/SUN	The SCC does not contain the software for sun pointing. If the FDIR algorithms in the SCC determine that a sun-pointing safe attitude is required, the SCC will command the relays in the ACE to set sun-pointing as the default attitude and will then command the Spacecraft into safe mode, at which point the ACE will assume control of the attitude processing functions.
LOAD OFF/SCIENCE DATA	In a minimum power condition, science data handling functions are not supported by the Spacecraft and instruments are not collecting science data because only survival equipment is powered.
ACE ONLY/SCIENCE DATA	The ACE does not contain the software to provide for the stored command processing used for science data collection, distribution, & collection.
SUN/SCIENCE DATA	Full science resources will not be provided during sun pointing safe mode. Also, instruments will not be viewing their nominal targets while the Spacecraft is in a sun-pointing attitude.

* Not precluded by design but represents major contingency scenario which is not being anticipated.

Table III. EOS-AM System State Derivation

Mode	Power Load	Computer	Delta-V	Attitude	Science Data	Comment
SAFE	OFF	ACE	NO	SUN	NO	
SAFE	OFF	ACE	NO	EARTH	NO	
N/A	OFF	ACE	YES	SUN	NO	ΔV/SUN, ΔV/ACE
N/A	OFF	ACE	YES	EARTH	NO	ΔV/ACE
N/A	OFF	SCC	NO	SUN	NO	SCC/SUN
SURVIVAL	OFF	SCC	NO	EARTH	NO	
N/A	OFF	SCC	YES	SUN	NO	SCC/SUN
DELTA-V	OFF	SCC	YES	EARTH	NO	
SAFE	OFF	ACE/SCC	NO	SUN	NO	
SAFE	OFF	ACE/SCC	NO	EARTH	NO	
N/A	OFF	ACE/SCC	YES	SUN	NO	ΔV/SUN,ΔV/ACE
N/A	OFF	ACE/SCC	YES	EARTH	NO	ΔV/ACE
N/A	OFF	ACE	NO	SUN	YES	ACE ONLY/SCIENCE DATA, LOAD OFF/SCIENCE DATA, SUN/SCIENCE DATA
N/A	OFF	ACE	NO	EARTH	YES	ACE ONLY/SCIENCE DATA, LOAD OFF/SCIENCE DATA

N/A = Modes not possible/planned to attain

Table III. EOS–AM System State Derivation (continued)

Mode	Power Load	Computer	Delta–V	Attitude	Science Data	Comment
N/A	OFF	ACE	YES	SUN	YES	ACE ONLY/SCIENCE DATA, ΔV/SUN, LOAD OFF/SCIENCE DATA, ΔV/ACE SUN/SCIENCE DATA
N/A	OFF	ACE	YES	EARTH	YES	ACE ONLY/SCIENCE DATA, ΔV/ACE LOAD OFF/SCIENCE DATA
N/A	OFF	SCC	NO	SUN	YES	SCC/SUN, SUN/SCIENCE DATA, LOAD OFF/SCIENCE DATA
N/A	OFF	SCC	NO	EARTH	YES	LOAD OFF/SCIENCE DATA
N/A	OFF	SCC	YES	SUN	YES	SCC/SUN, SUN/SCIENCE DATA, LOAD OFF/SCIENCE DATA, ΔV/SUN
N/A	OFF	SCC	YES	EARTH	YES	LOAD OFF/SCIENCE DATA
N/A	OFF	ACE/SCC	NO	SUN	YES	LOAD OFF/SCIENCE DATA, SUN/SCIENCE DATA
N/A	OFF	ACE/SCC	NO	EARTH	YES	LOAD OFF/SCIENCE DATA
N/A	OFF	ACE/SCC	YES	SUN	YES	ΔV/SUN, ΔV/ACE, LOAD OFF/SCIENCE DATA, SUN/SCIENCE DATA
N/A	OFF	ACE/SCC	YES	EARTH	YES	ΔV/ACE, LOAD OFF/SCIENCE DATA
SAFE	ON	ACE	NO	SUN	NO	

N/A = Modes not possible/planned to attain

Table III. EOS-AM System State Derivation (continued)

Mode	Power Load	Computer	Delta-V	Attitude	Science Data	Comment
SAFE	ON	ACE	NO	EARTH	NO	
N/A	ON	ACE	YES	SUN	NO	ΔV/SUN, ΔV/ACE
N/A	ON	ACE	YES	EARTH	NO	ΔV/ACE
N/A	ON	SCC	NO	SUN	NO	SCC/SUN
STANDBY	ON	SCC	NO	EARTH	NO	
N/A	ON	SCC	YES	SUN	NO	SCC/SUN, ΔV/SUN
DELTA-V	ON	SCC	YES	EARTH	NO	
SAFE	ON	ACE/SCC	NO	SUN	NO	
SAFE	ON	ACE/SCC	NO	EARTH	NO	
N/A	ON	ACE/SCC	YES	SUN	NO	ΔV/SUN, ΔV/ACE
N/A	ON	ACE/SCC	YES	EARTH	NO	ΔV/ACE
N/A	ON	ACE	NO	SUN	YES	ACE ONLY/SCIENCE DATA, SUN/SCIENCE DATA
N/A	ON	ACE	NO	EARTH	YES	ACE ONLY/SCIENCE DATA
N/A	ON	ACE	YES	SUN	YES	ACE ONLY/SCIENCE DATA, ΔV/SUN, SUN/SCIENCE DATA, ΔV/ACE

N/A = Modes not possible/planned to attain

Table III. EOS–AM System State Derivation (continued)

Mode	Power Load	Computer	Delta–V	Attitude	Science Data	Comment
N/A	ON	ACE	YES	EARTH	YES	ACE ONLY/SCIENCE DATA, ΔV/ACE
N/A	ON	SCC	NO	SUN	YES	SCC/SUN, SUN/SCIENCE DATA
SCIENCE	ON	SCC	NO	EARTH	YES	
N/A	ON	SCC	YES	SUN	YES	SCC/SUN, ΔV/SUN, SUN/SCIENCE DATA
DELTA–V	ON	SCC	YES	EARTH	YES	
N/A	ON	ACE/SCC	NO	SUN	YES	SUN/SCIENCE DATA
SAFE	ON	ACE/SCC	NO	EARTH	YES	
N/A	ON	ACE/SCC	YES	SUN	YES	ΔV/SUN, ΔV/ACE, SUN/SCIENCE DATA
N/A	ON	ACE/SCC	YES	EARTH	YES	ΔV/ACE

N/A = Modes not possible/planned to attain

(A)ΔV/SUN: ΔV maneuvers with sun pointing are not applicable

(B)ΔV/ACE: ΔV maneuvers with attitude control via the ACE are not applicable

(C)SCC/SUN: SCC does not contain s/w for sun pointing

(D)LOAD OFF/SCIENCE DATA: Science data resources cannot be provided with a shed power load, instruments are powered off

(E)ACE ONLY/SCIENCE DATA: The ACE does not contain s/w to provide for science data collection, distribution, & collection (i.e., stored cmd processing)

(F)SUN/SCIENCE DATA: Full science resources will not be provided with sun pointing, i.e. instruments will not be taking science data

Table IV. EOS-AM Operating Mode Definitions

Mode	Power Load	Computer	Delta-V	Attitude	Science Data	Sub-Mode Number
SCIENCE	ON	SCC	NO	EARTH	YES	N/A
STANDBY	ON	SCC	NO	EARTH	NO	N/A
SURVIVAL	OFF	SCC	NO	EARTH	NO	N/A
SAFE	OFF	ACE	NO	SUN	NO	0
SAFE	OFF	ACE	NO	EARTH	NO	1
SAFE	ON	ACE	NO	SUN	NO	2
SAFE	ON	ACE	NO	EARTH	NO	3
SAFE	OFF	ACE/SCC	NO	SUN	NO	4
SAFE	OFF	ACE/SCC	NO	EARTH	NO	5
SAFE	ON	ACE/SCC	NO	SUN	NO	6
SAFE	ON	ACE/SCC	NO	EARTH	NO	7
SAFE	ON	ACE/SCC	NO	EARTH	YES	8
DELTA-V	OFF	SCC	YES	EARTH	NO	0
DELTA-V	ON	SCC	YES	EARTH	NO	1
DELTA-V	ON	SCC	YES	EARTH	YES	2

The following two system operating modes (Ground Test Mode and Launch/Ascent Mode) have been defined independently of the analysis of state variables in Table III. Ground Test Mode and Launch/Ascent Mode are used during mission phases when the Spacecraft is integrated with the launch vehicle. In these phases, the GN&C subsystem is not controlling the Spacecraft attitude, so that the state variable "attitude" is irrelevant.

GROUND TEST	ON	SCC	NO	Not Relevant	NO	N/A
LAUNCH/ASCENT	OFF	SCC	YES	Not Relevant	NO	N/A

Table V. Spacecraft System Modes

System Mode	Spacecraft Mission Phase						
	Prelaunch	Launch/ Ascent	Orbit Acquisition Initialization	Orbit Acquisi-tion	Operational Initialization	Operational	End of Mission
Ground Test Mode	P	B					
Launch/Ascent Mode		P	P				
Standby Mode			P	P	P	B	
Science Mode					P	P	
Delta–V Mode				P	P	P	
Survival Mode		B	B	B	B	B	P
Safe Mode		B	B	B	B	B	B

Legend: P Primary mode
B Backup mode

2.2 Mode Architecture

A system mode is an operational configuration with a set of minimum requirements and resources that can be allocated to the subsystems. Higher functionality than the minimum within a given mode is possible, up to the minimum levels of the next higher mode. The system mode is not a predefined combination of "subsystem modes" or hardware configurations. In general, there are multiple combinations of Spacecraft Bus hardware and subsystem modes that can be chosen to meet system mode requirements.

2.3 Mode Transition Overview

Transition between operating modes will be initiated by either (1) ground command (stored or real–time) or (2) on–board failure detection logic. Non–time–critical faults will be handled by ground command. The on–board failure detection logic is the Spacecraft Failure Detection, Isolation and Recovery (FDIR) system which is capable of reconfiguring hardware and software in response to time–critical Spacecraft faults. The state diagrams and entry/exit criteria provided in this report serve as the initial definition for FDIR functionality; further definition is given in EOS–DN–SE&I–027.

Typically a sequence of commands must be executed in order to effect the transition from one mode to another. Also, the point of transition is not explicitly defined as a particular event. Rather, the transition will be considered complete when the Spacecraft performance has been verified as capable of providing the resources and performing the functions required by the mode that was entered.

The transition between primary modes will typically be initiated by ground command. For example, during the Operational Mission Phase, ground command will be required to initiate a transition from the Science Mode to the Delta–V Mode. In certain cases, transition between two primary modes

may be accomplished autonomously by on-board logic. For example, in the Operational Initialization Phase, both Standby and Science Modes are primary modes, used for subsystem and Instrument checkout, respectively. If a high rate data system failure occurs during Instrument checkout, an autonomous transition may occur from Science Mode to Standby Mode.

The transition between a primary mode and a back-up mode can be initiated by ground command or may be autonomously initiated by on-board logic. Following violation of pre-selected criteria the FDIR system will autonomously initiate a transition from a primary mode (e.g., Science Mode) to a back-up mode (e.g., Safe Mode). In the event of SCC failure, loss of the "I'm OK" signal from the SCC will cause the attitude control electronics (ACE) to take control of the Spacecraft attitude and thereby transition into the Safe Mode. In this type of Safe Mode entry, equipment operating during the Safe Mode will be preselected to reflect the most current equipment availability. The other autonomous transition into Safe Mode occurs upon detection by GN&C FDIR of an attitude error beyond a pre-defined threshold. In this case, the ACE again controls the attitude, but the SCC continues to control other Spacecraft functions.

When the SCC is operational, it is also possible to have autonomous transitions from higher mode sublevels to lower sublevels within the same mode. An example of this is Safe Mode, in which the SCC can control the autonomous transition from earth pointing to sun pointing.

Exit from a back-up mode to a functionally more capable mode will be by ground command only.

Figures 2 to 8 illustrate the allowable mode transitions for each of the mission phases. The criteria to perform the mode transitions are established in the mode descriptions in Section 3.

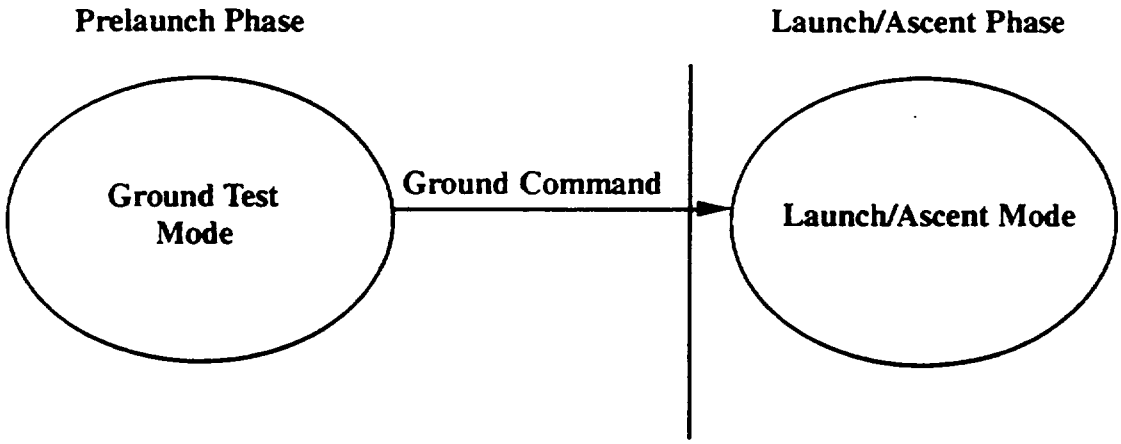

Figure 2. Prelaunch Mission Phase

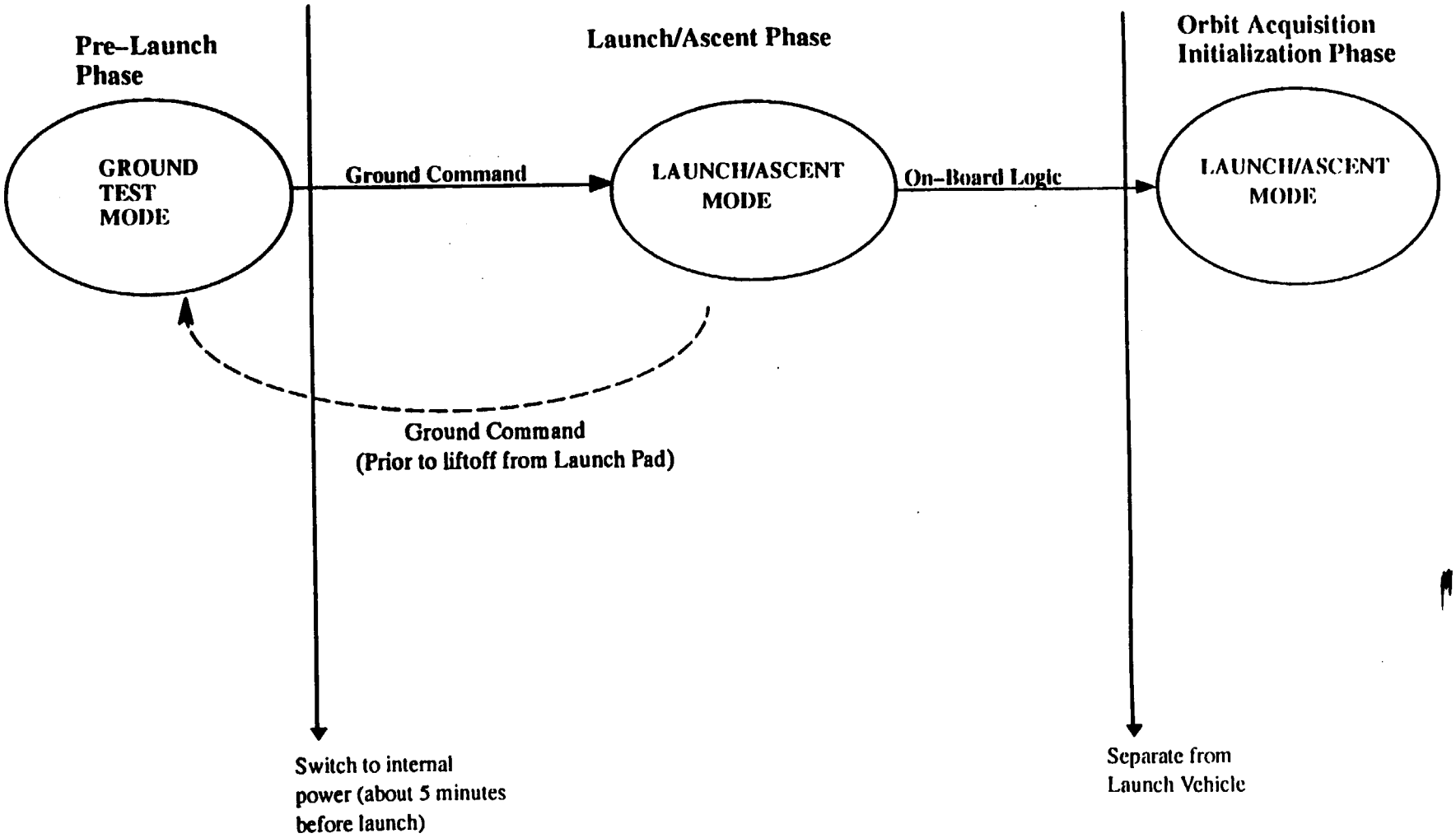

Figure 3. Launch/Ascent Mission Phase

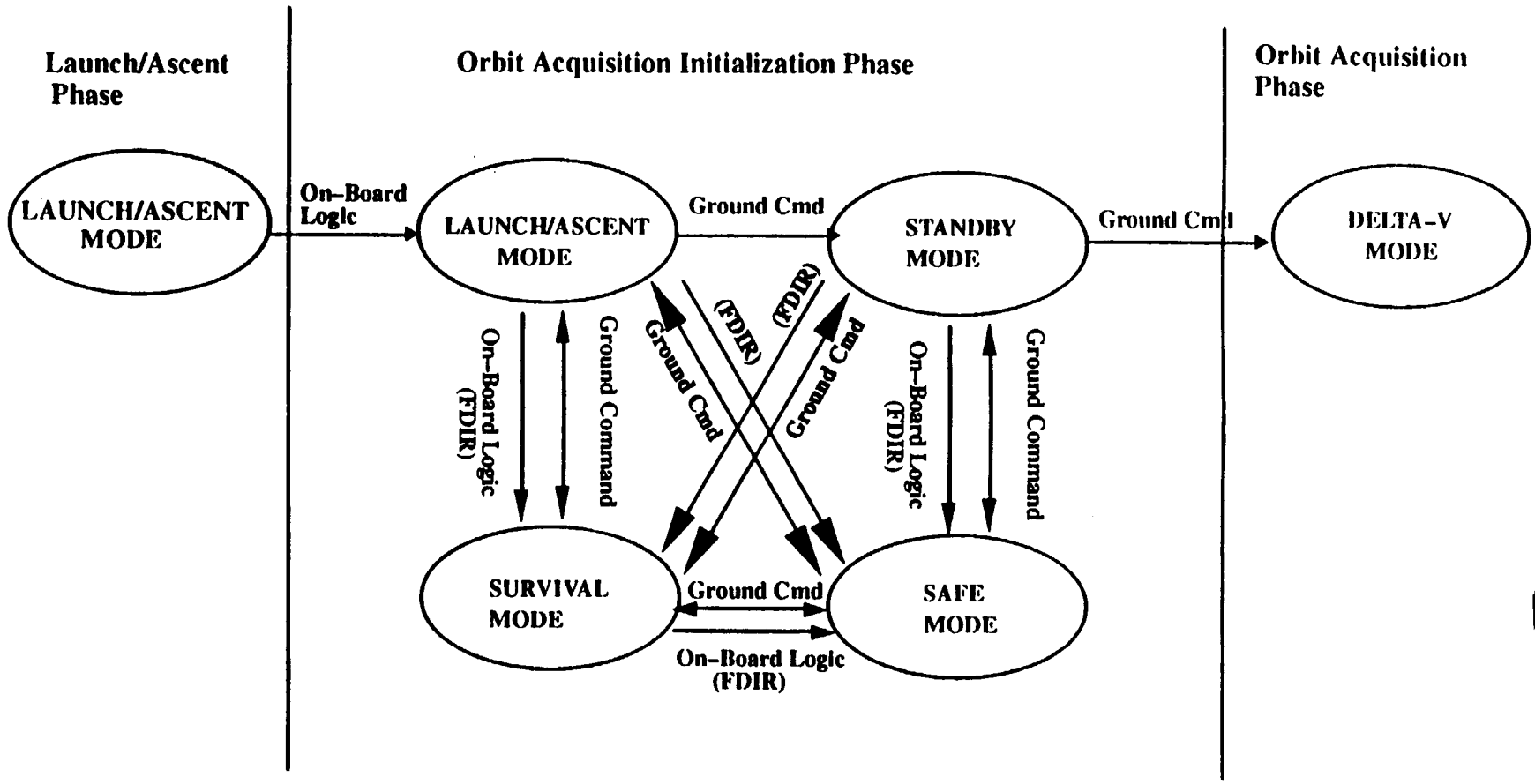

Figure 4. Orbit Acquisition Initialization Mission Phase

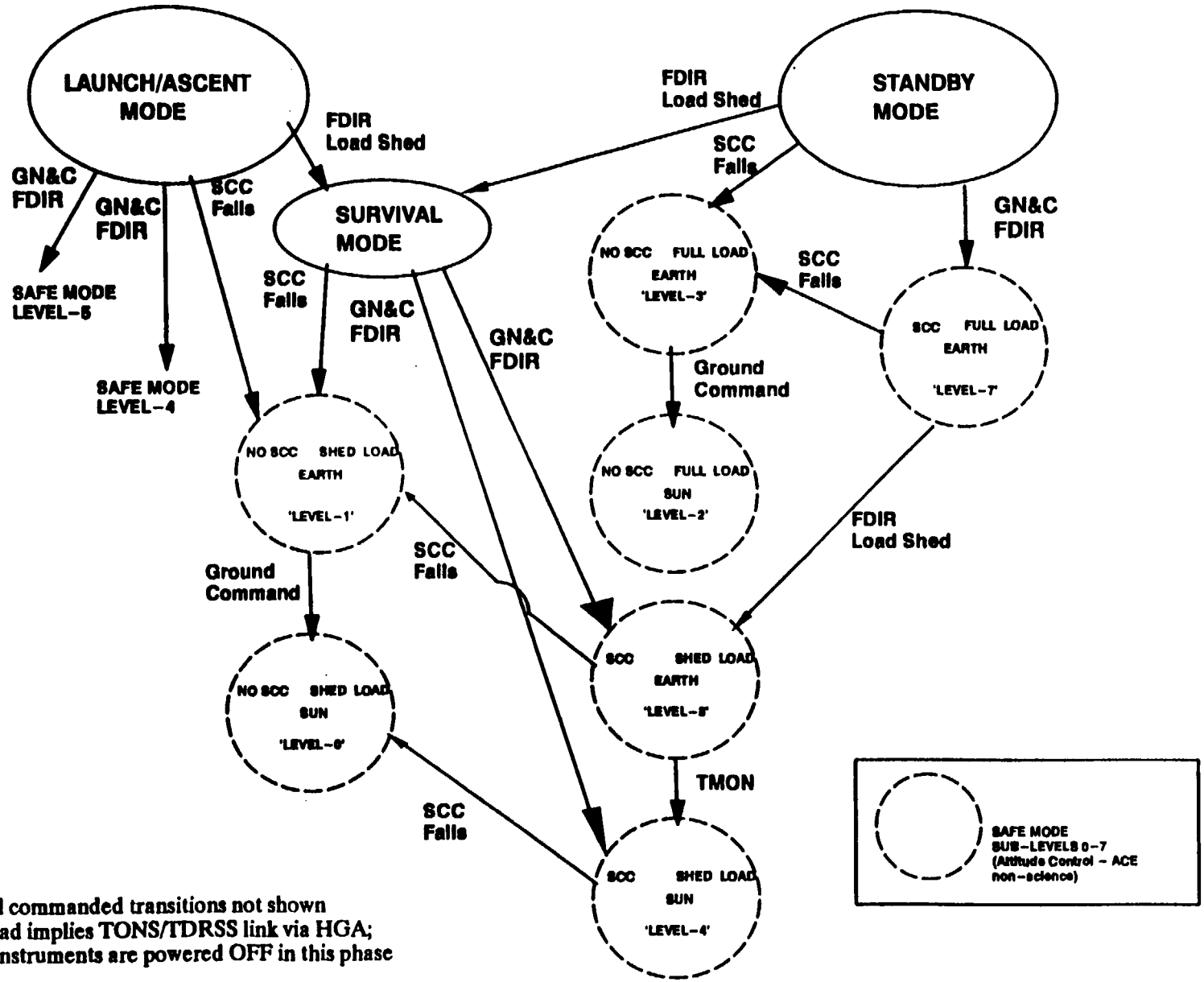

* Ground commanded transitions not shown
* Full Load implies TONS/TDRSS link via HGA; instruments are powered OFF in this phase

Figure 4a. Orbit Acquisition Initialization Mission Phase – More Detail Autonomous Transitions

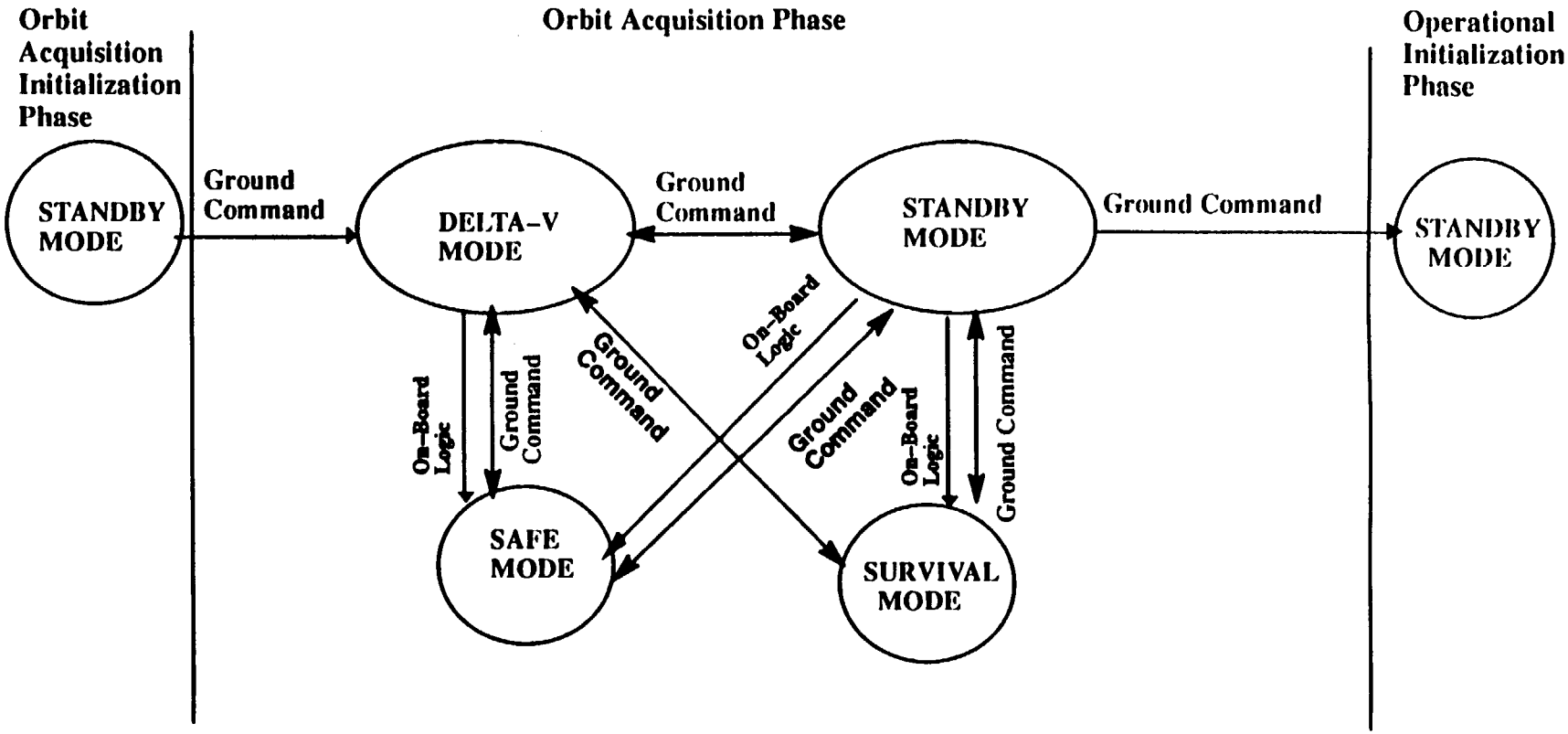

Figure 5. Orbit Acquisition Mission Phase

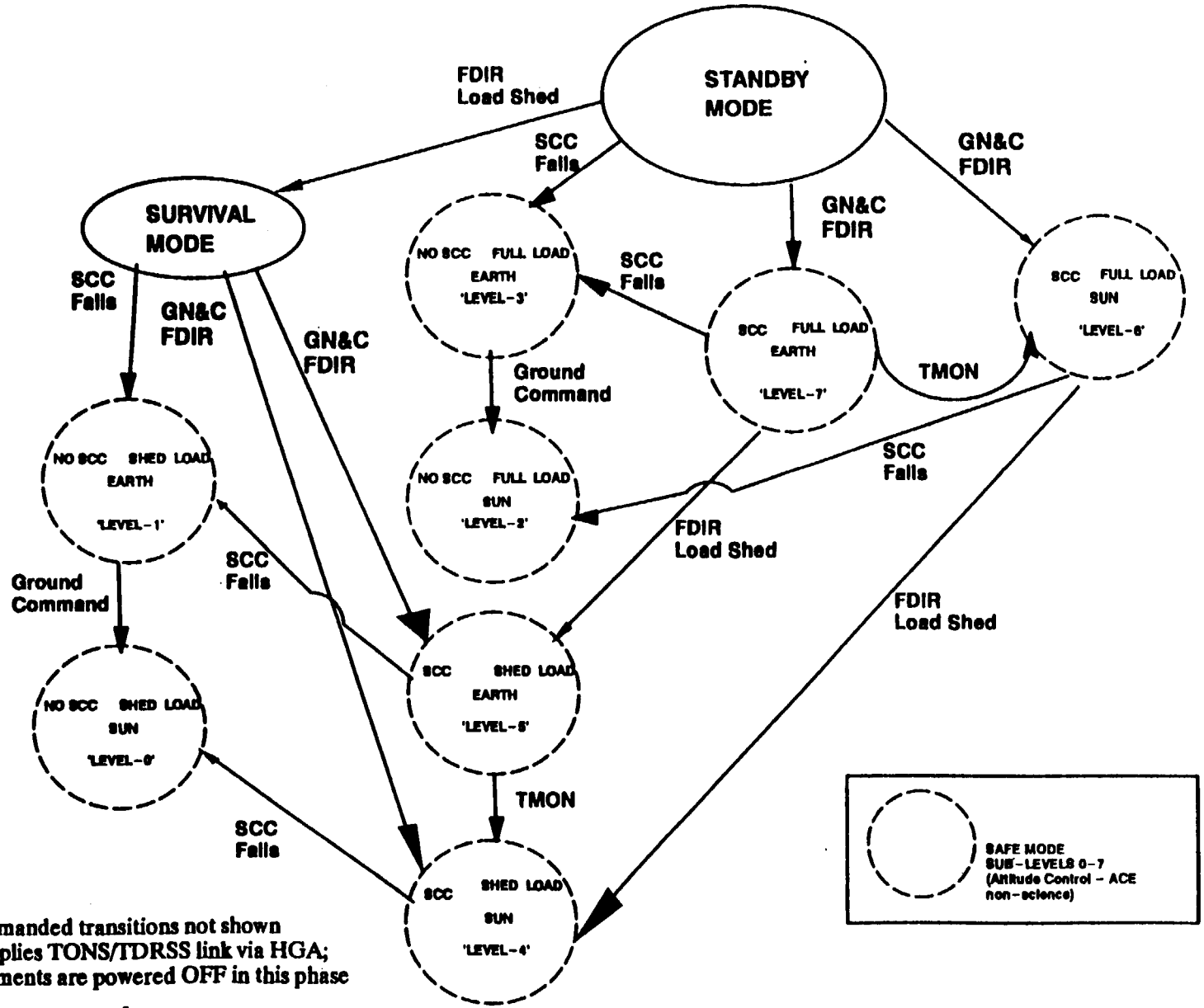

- Ground commanded transitions not shown
- Full Load implies TONS/TDRSS link via HGA; instruments are powered OFF in this phase

Figure 5a. Orbit Acquisition Mission Phase – More Detail Autonomous Transitions

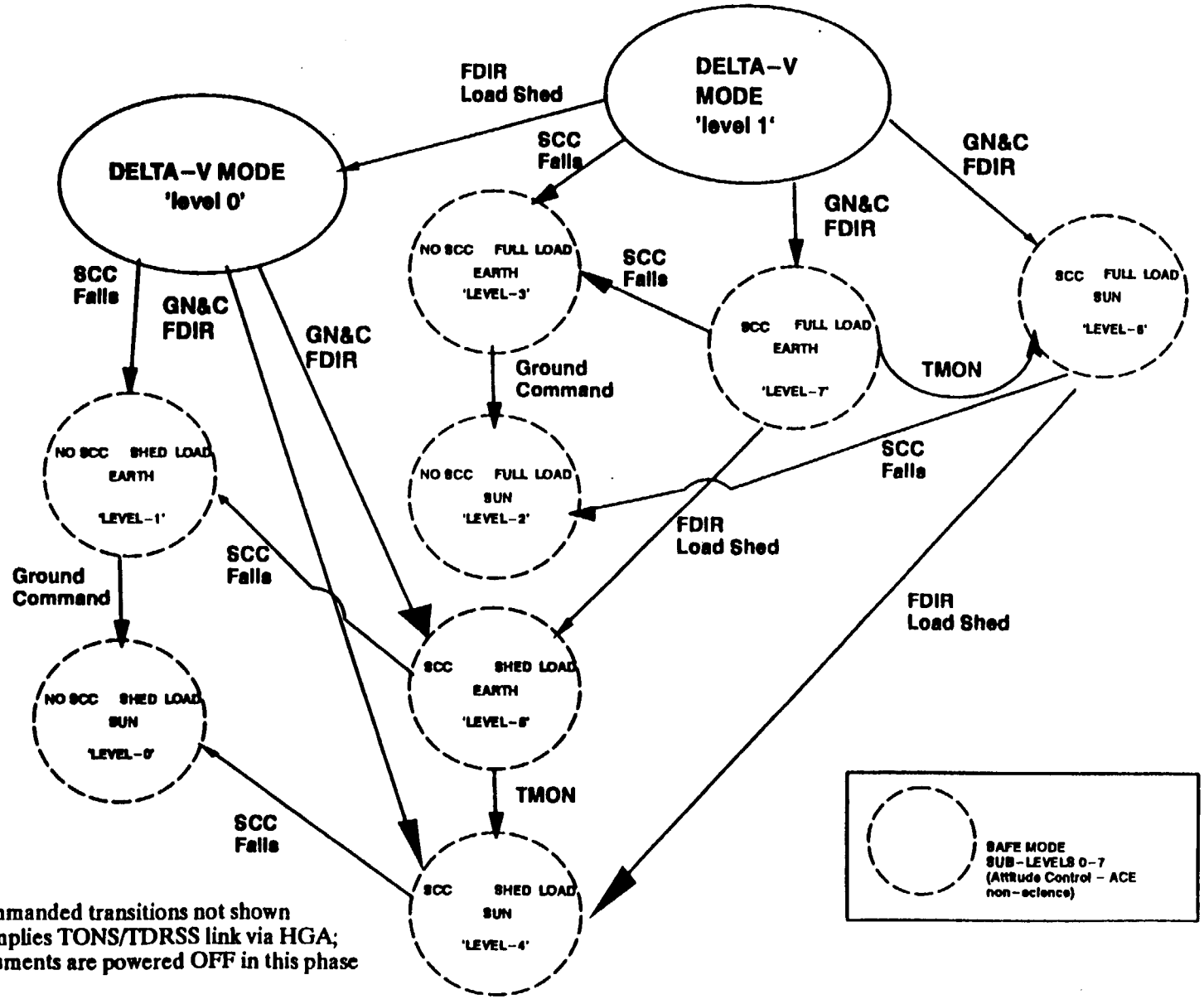

- Ground commanded transitions not shown
- Full Load implies TONS/TDRSS link via HGA; instruments are powered OFF in this phase

Figure 5b. Orbit Acquisition Mission Phase – More Detail Autonomous Transitions

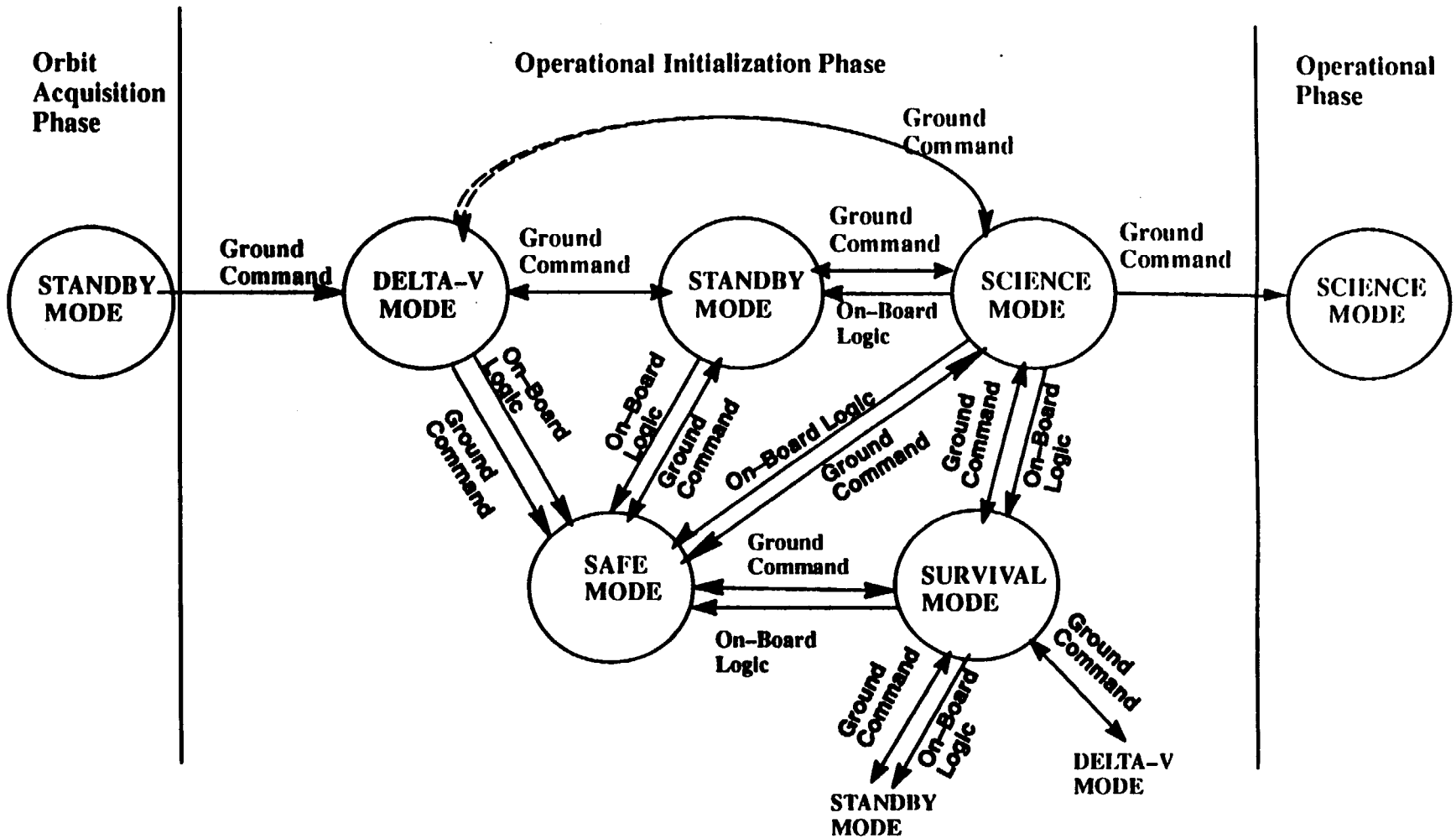

Figure 6. Operational Initialization Mission Phase

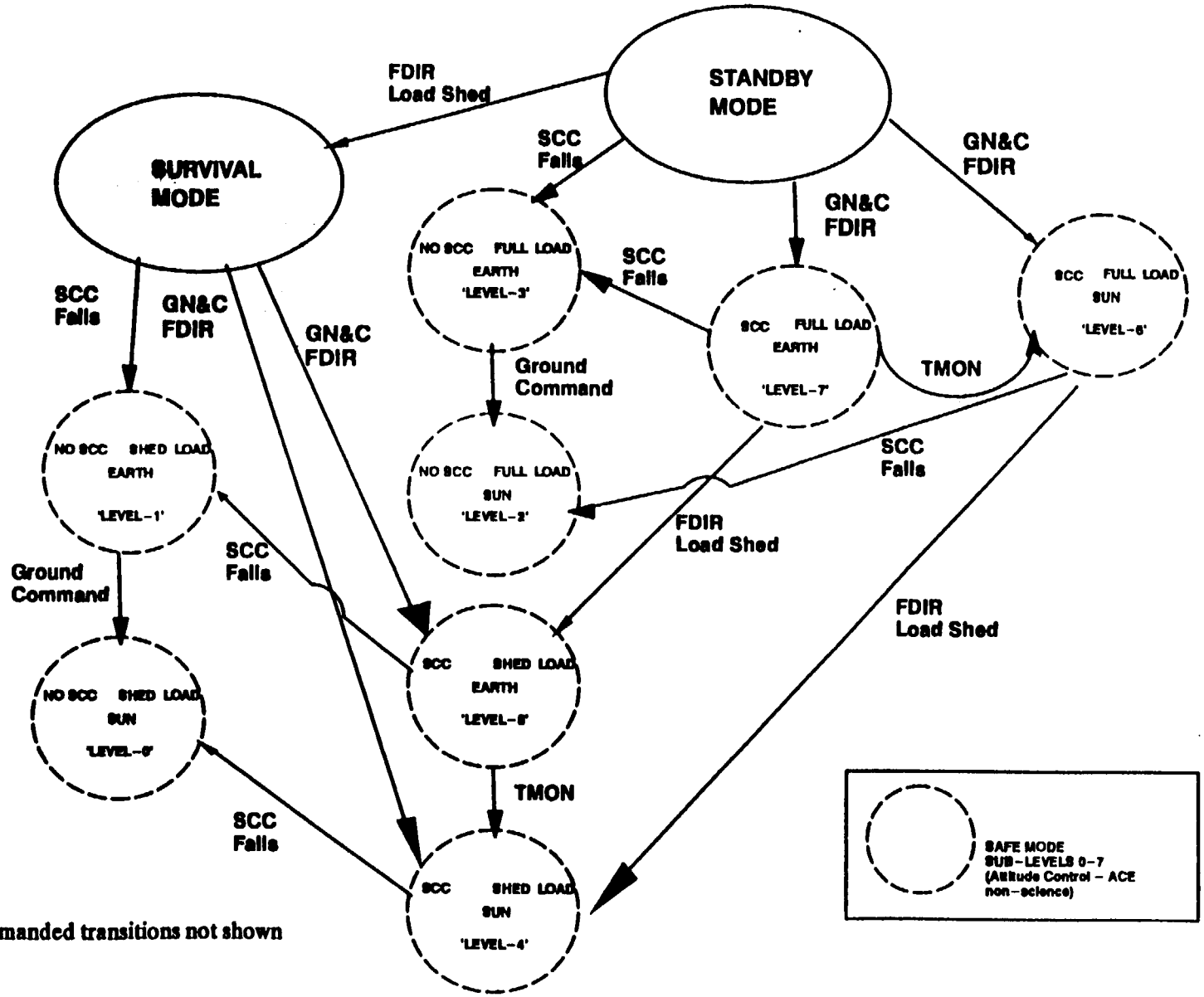

* Ground commanded transitions not shown

Figure 6a. Operational Initialization Mission Phase – More Detail Autonomous Transitions

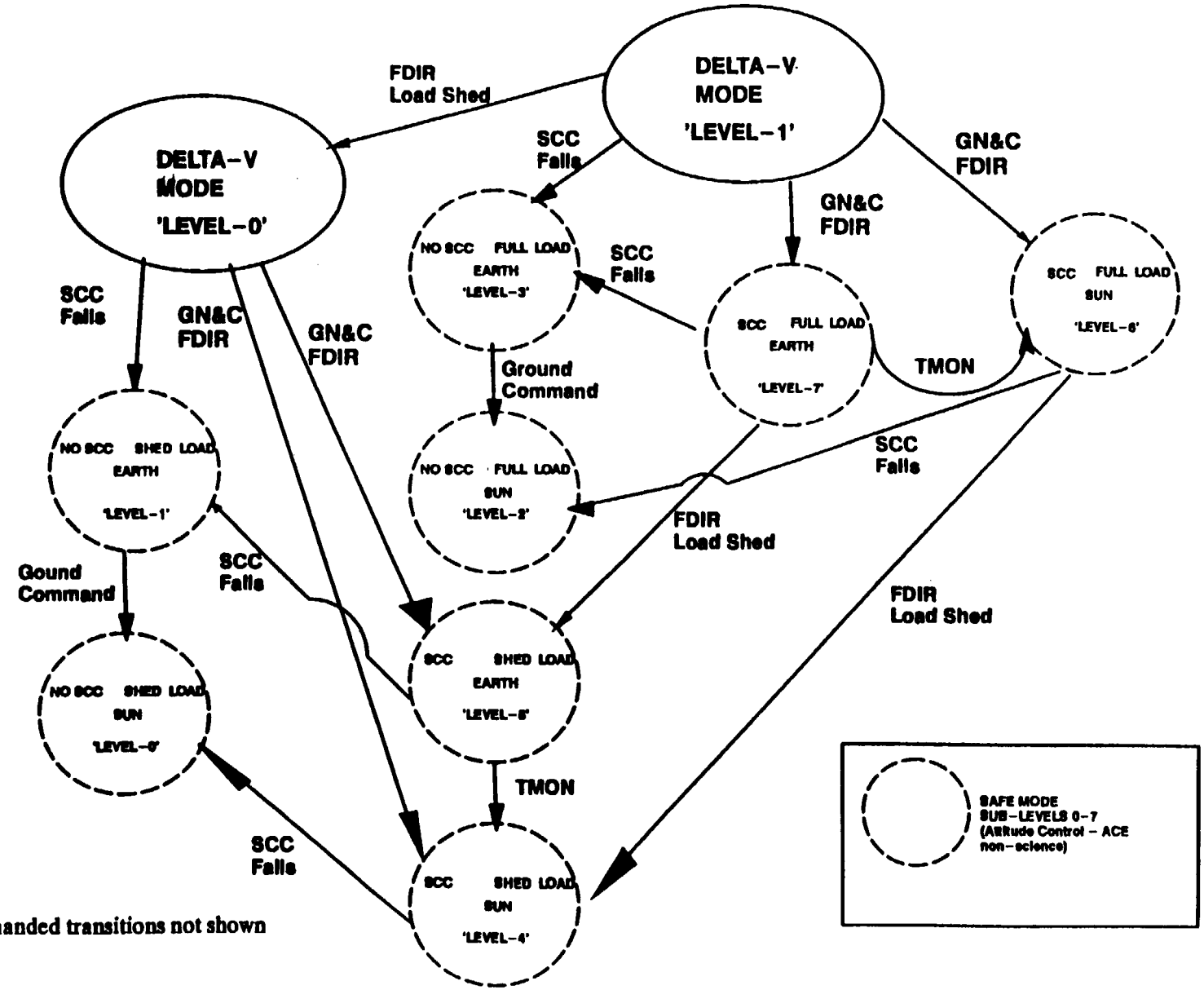

* Ground commanded transitions not shown

Figure 6b. Operational Initialization Mission Phase – More Detail Autonomous Transitions

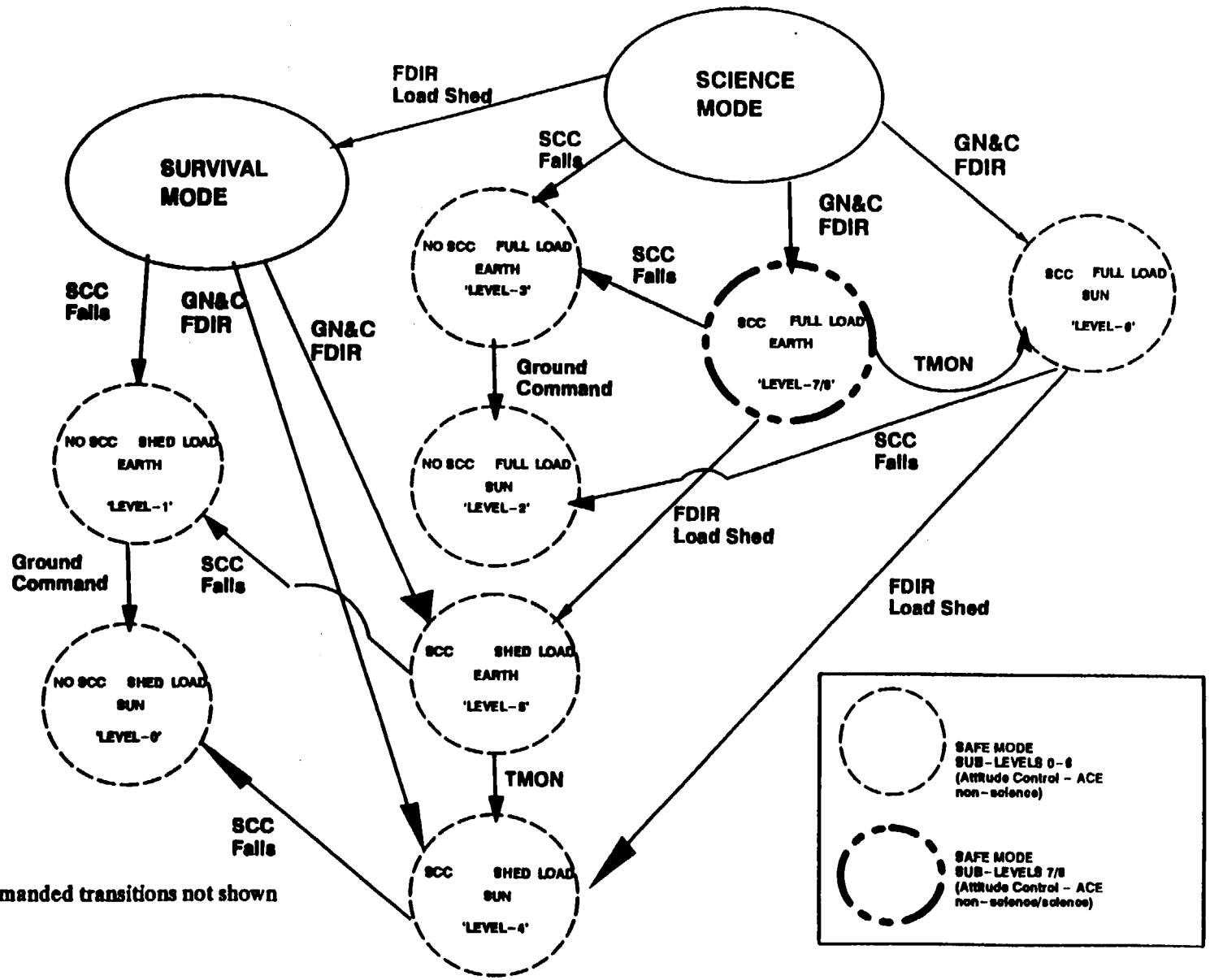

* Ground commanded transitions not shown

Figure 6c. Operational Initialization Mission Phase – More Detail Autonomous Transitions

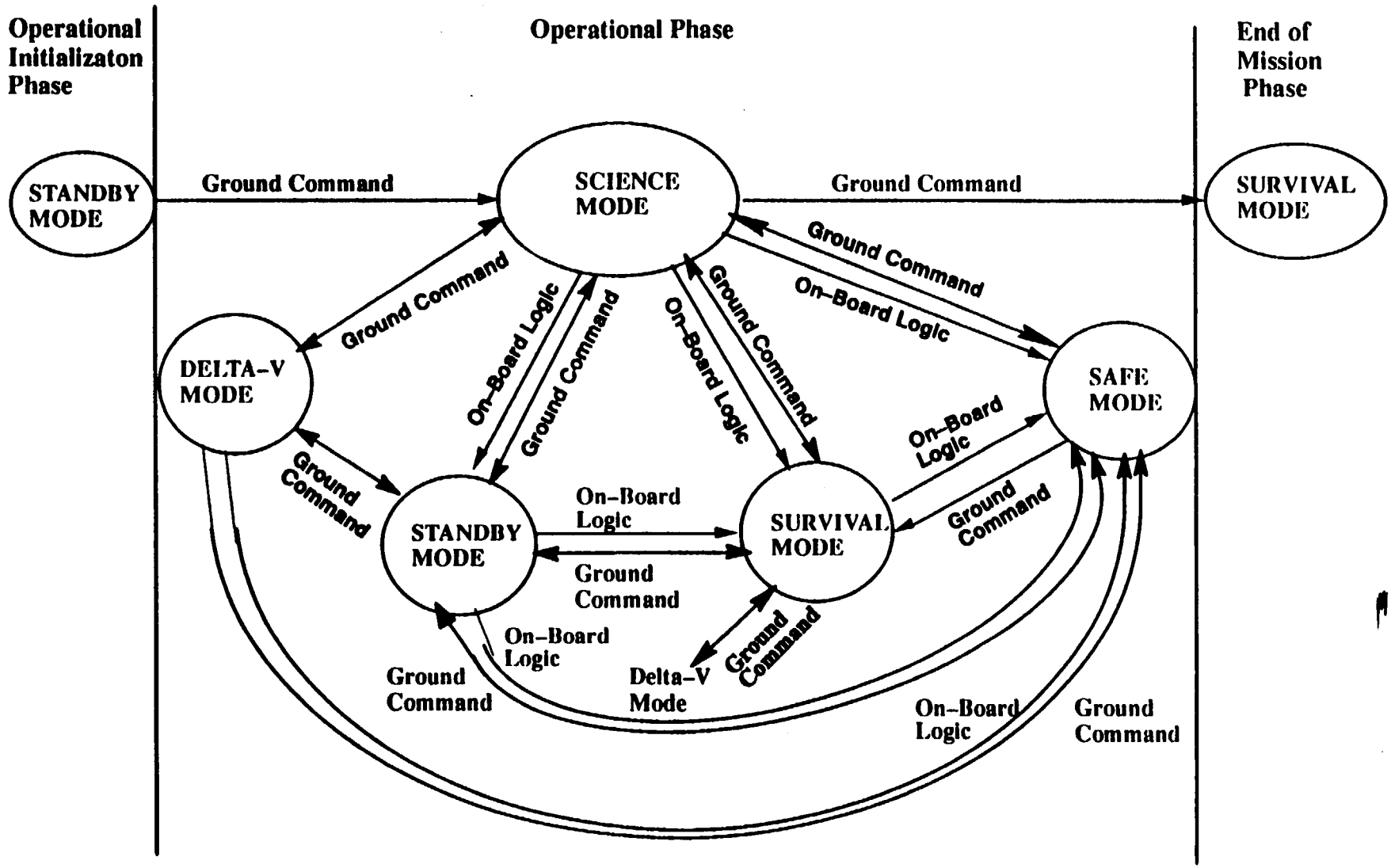

Figure 7. Operational Mission Phase

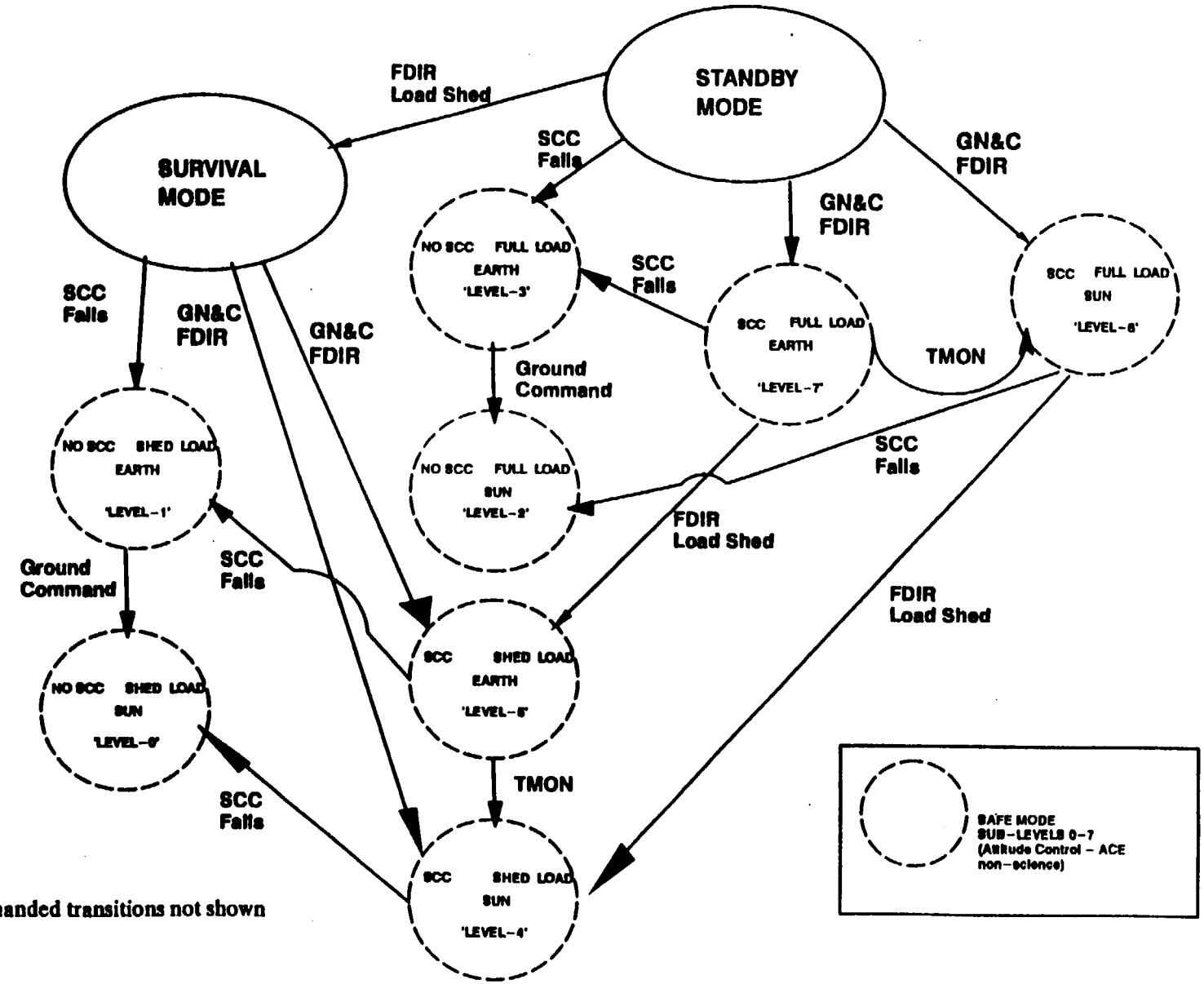

* Ground commanded transitions not shown

Figure 7a. Operational Mission Phase – More Detail Autonomous Transitions

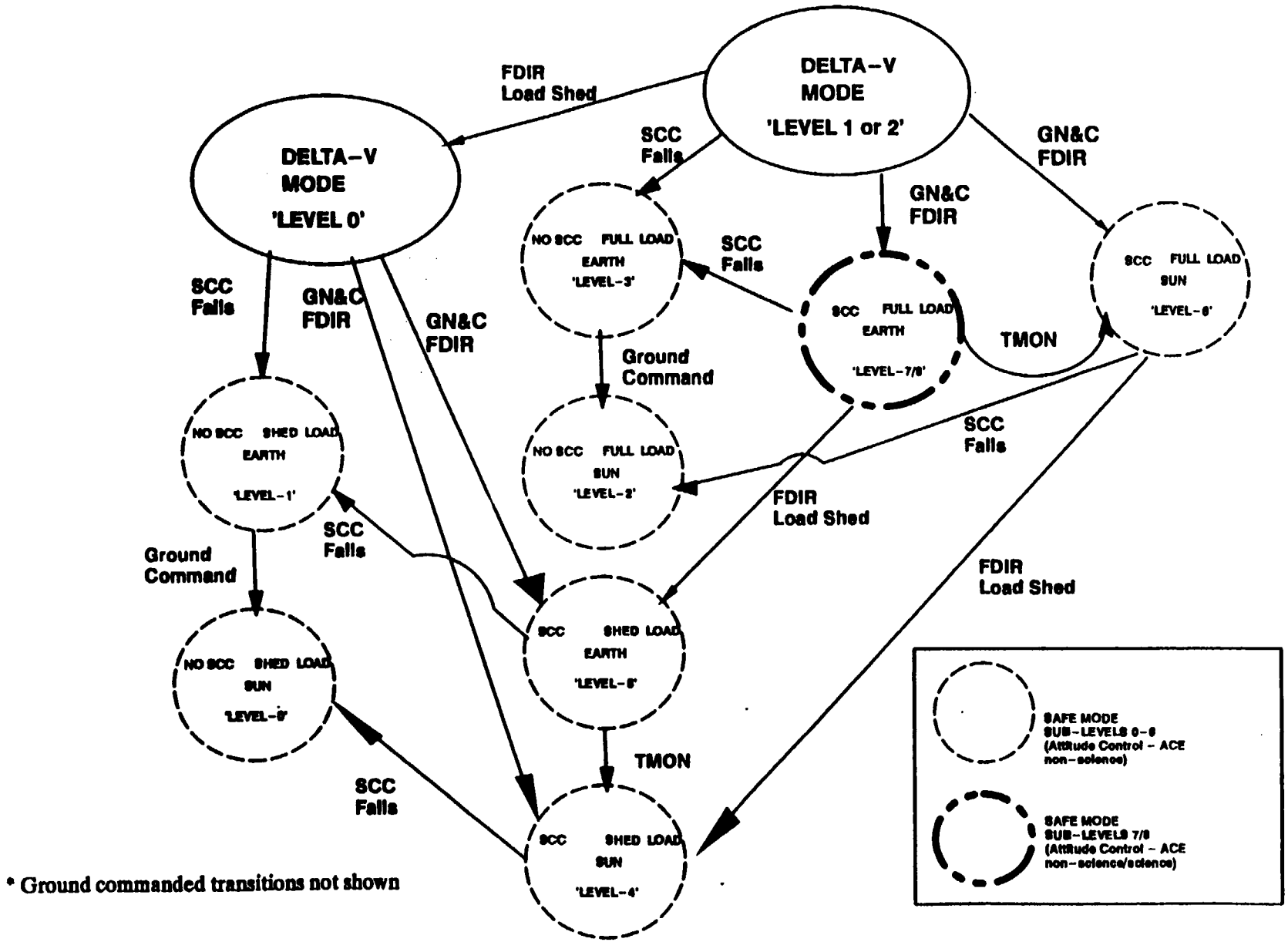

* Ground commanded transitions not shown

Figure 7b. Operational Mission Phase – More Detail Autonomous Transitions

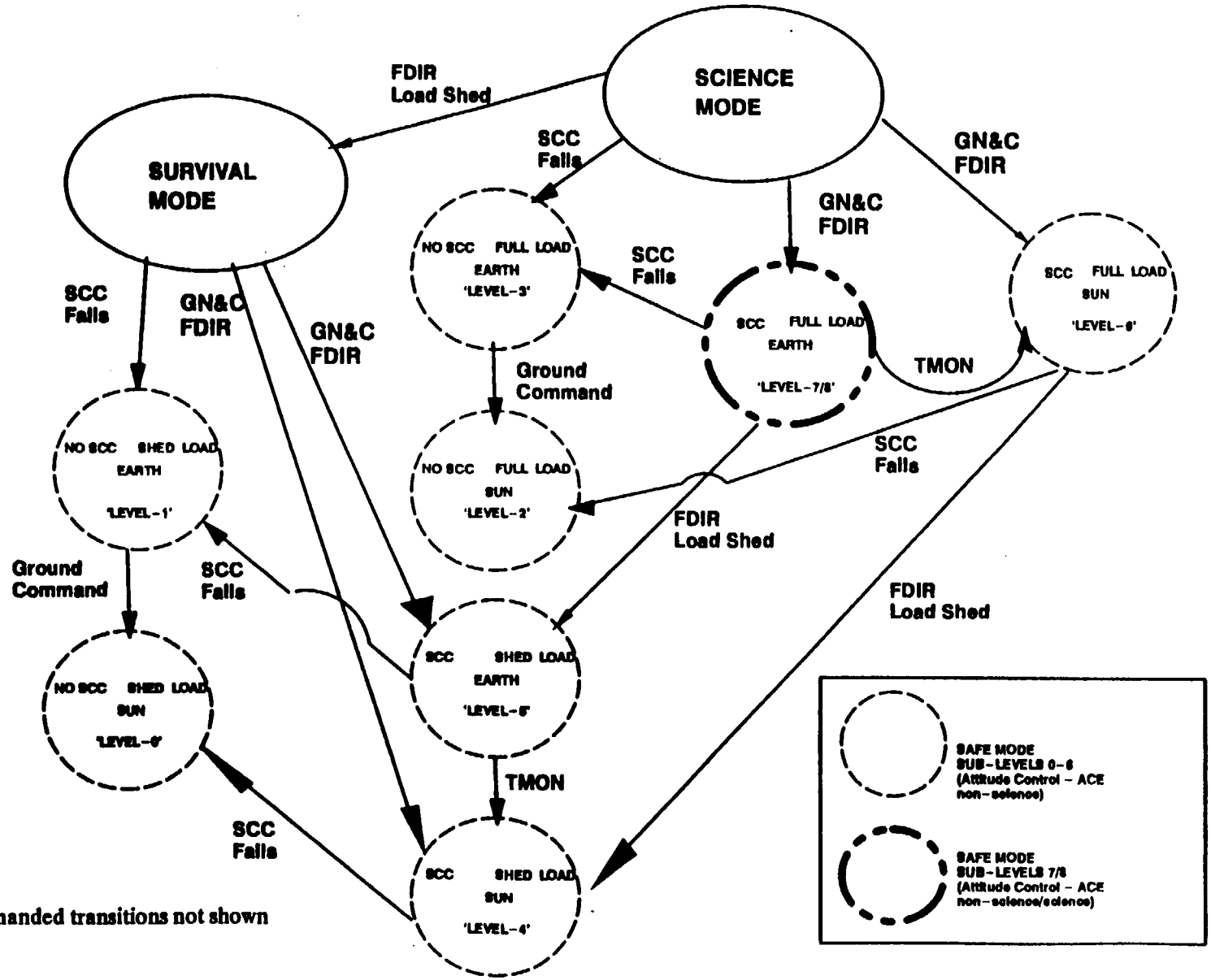

* Ground commanded transitions not shown

Figure 7c. Operational Mission Phase – More Detail Autonomous Transitions

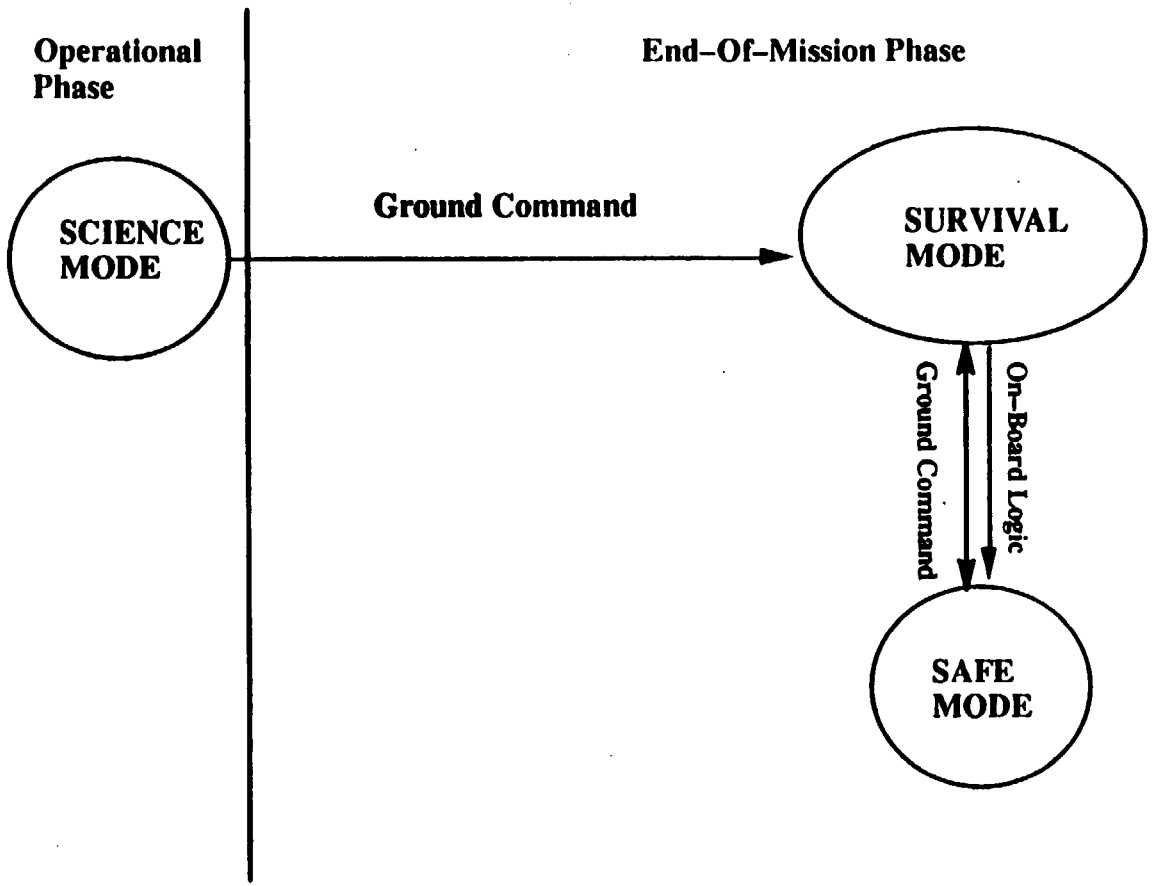

Figure 8. End–of–Mission Phase

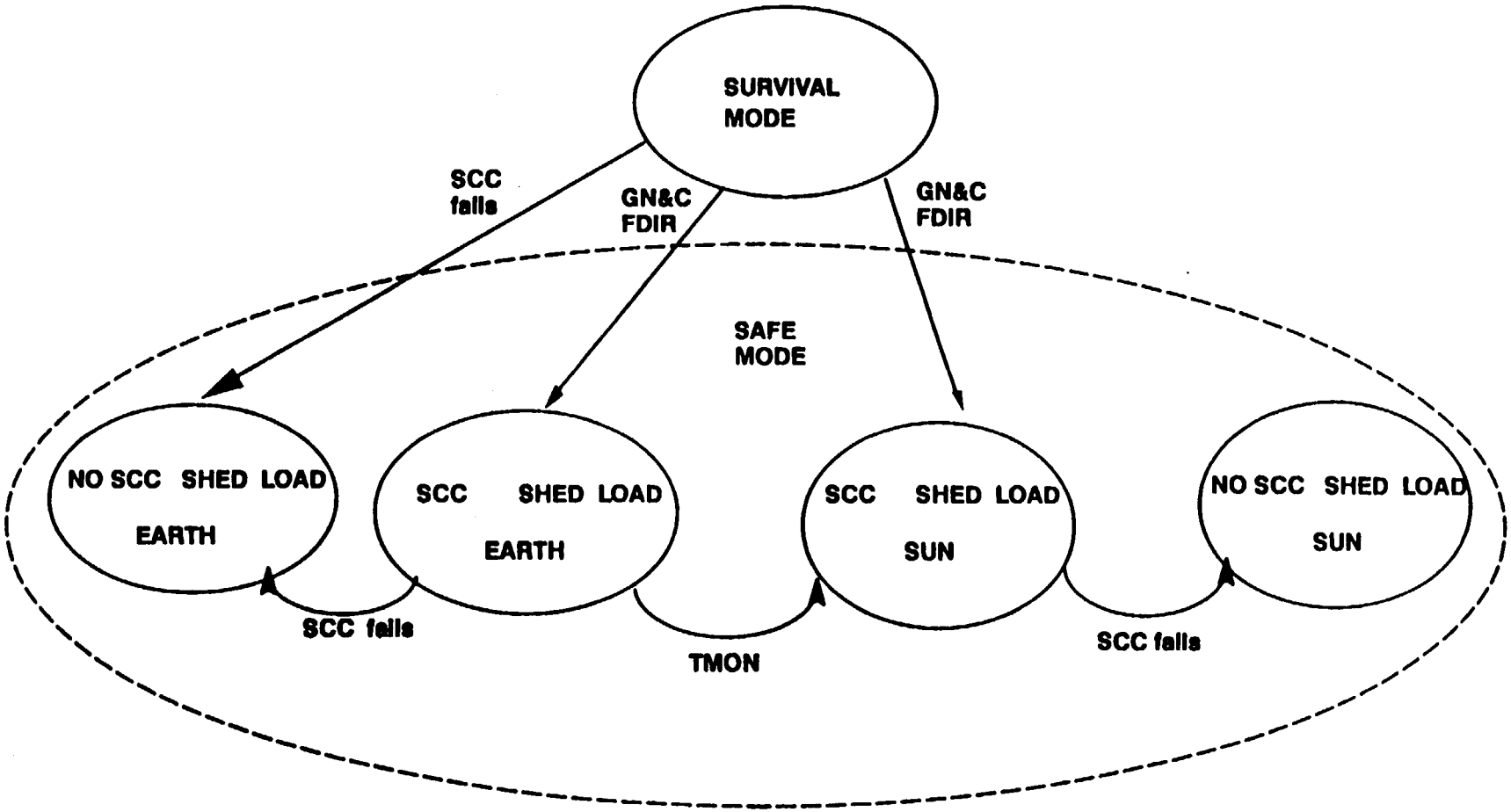

* Ground commanded transitions not shown

Figure 8a. End–of–Mission Phase – More Detail Autonomous Transitions

3 SYSTEM MODE REQUIREMENTS

The system mode requirements section contains functional and performance requirements, resource allocations, and transition criteria for the operating modes. Sections 3.1 to 3.7 provide functional descriptions, transition criteria, subsystem requirements, and operations requirements for the system modes. Instrument specific information, such as available resources and mode transition notifications, along with appropriate Instrument response to these conditions, is covered in Section 3.8. Key performance requirements and power allocations are provided in Section 3.9.

3.1 Ground Test Mode

3.1.1 Functional Overview

The Spacecraft will be in Ground Test Mode during the Prelaunch Phase of the mission, which starts with the integration of the Spacecraft with the launch vehicle and ends with the transition to internal power in preparation for launch. In this mode the Spacecraft is essentially in a "check–out" state, receiving power via the launch vehicle "T–minus–zero" (T–0) umbilical. The readiness of the Spacecraft for launch is established by verifying the aliveness of redundant subsystem hardware aliveness and demonstrating redundant power and signal paths to major components (although not by using every possible command for a given path). During this mode, the batteries are continuously charged, and equipment is powered as required for low–rate commanding and telemetry. Telemetry is provided to the GSE via the T–0 umbilical.

3.1.2 Entry/Exit

Entry: Nominal entry into the Ground Test Mode occurs following integration of the Spacecraft with the launch vehicle. After integration with the launch vehicle, the Spacecraft will be powered ON and housekeeping subsystems will initialize to default conditions. The Spacecraft Checkout Station (SCS) will load the SCC software and stored command sequences. Commands to configure the Spacecraft for launch will be sent from the SCS via the umbilical.

Entry into Ground Test Mode can also occur from Launch/Ascent Mode in the contingency situation where the launch is aborted or delayed due to a major anomaly after going to internal power and prior to liftoff. In this unique situation, the T–0 umbilical may be reconnected to the Spacecraft, in which case the mission phase would transition from Launch/Ascent back to Pre–Launch, and the Spacecraft would again receive commands and power through the umbilical.

Exit: Exit from this mode will occur upon transition to internal power (resulting in the transition to the Launch Phase), approximately five minutes before lift–off.

The allowable mode transitions to enter or exit Ground Test Mode are illustrated in Figures 2 and 3. Table VI summarizes criteria for transition to the Ground Test Mode from an initial mode (allowable entry point) and exit from the Ground Test Mode to another mode (allowable exit point).

Table VI. Ground Test Mode Transition

Allowable Entry Points	Initiation	Criteria
Begin Prelaunch	Ground Command	– Integration to launch vehicle is complete –All systems ready to commence ground testing
Launch/Ascent Mode	Ground Command	–Abort or delay launch
Allowable Exit Points		
Launch/Ascent Mode	Ground Command	–Transition to internal power –All systems nominal

3.1.3 Minimum Subsystem Requirements

GN&CS: All GN&C components will be powered on to support limited testing of the Guidance Navigation & Control Subsystem and for launch readiness.

C&DHS: The Command & Data Handling Subsystem will monitor Spacecraft equipment and instrument telemetry to ensure health and safety. Commands received via the umbilical will be distributed to equipment and instruments as necessary. Health and safety telemetry will be distributed for transmission via the umbilical. The Spacecraft Bus data processing and distribution will be SCC/CTIU based. Limited testing of the C&DHS will be supported.

TCS: The Thermal Control Subsystem will maintain operational housekeeping equipment within operating temperature limits and non–operating housekeeping equipment and instruments within survival temperature limits. Limited testing of the TCS will be supported.

EPS: The Electrical Power Subsystem will interface with the launch vehicle T–0 power umbilical via the EAS. The EPS will distribute the power from the umbilical to operating and survival equipment. The EPS will support battery charging. Limited testing of the EPS will be supported.

COMMS: The Communication Subsystem will accommodate a hardline telemetry link through the launch vehicle T–0 umbilical. Limited testing will include an RF test of the omni antennas and an end–to–end test of the launch/ascent link (i.e., a direct connection to the Launch Vehicle telemetry stream).

PROPS: The propulsion subsystem will be initialized to provide thruster operations as necessary for post–separation maneuvers. The Propulsion Module Electronics Assembly (PMEA) will be operational, and engine catbed heaters for six 1–lb thrusters will be enabled. Telemetry will be provided to indicate propellant–feed pressures and temperatures, valve temperatures, and latching valve position indication. Limited testing of the Propulsion Subsystem will be supported.

SMS: Limited testing of the Structure and Mechanisms Subsystem will be supported. This involves monitoring of telemetry to verify operational readiness of deployment mechanisms and drive motors.

EAS: The EAS will provide power and data distribution for the Spacecraft via harnessing. Limited testing of the Electrical Accommodation Subsystem will be supported. This involves verification of power and signal distribution paths to major components, especially those needed for post–separation activities. Testing will also involve monitoring of telemetry to verify operational readiness of arming plugs.

3.1.4 Ground Test Mode Operations

While in Ground Test Mode during the Prelaunch Mission Phase, the Spacecraft will be undergoing prelaunch test at the Vandenberg Air Force Base. The Martin Marietta Integration & Test (I&T) group will be responsible for Spacecraft testing and control, and the FOT will be provided with the capability to monitor Spacecraft telemetry from the launch site. All bus housekeeping equipment will undergo a short form verification during the Ground Test Mode to verify subsystem integrity and functionality. External stimuli will not be used. Health and safety telemetry will be verified to be within allowable ranges, and non–operating equipment may be powered ON for aliveness checks. Instrument science will not be tested during this mode, but the integrity of instrument interfaces will be verified. (More extensive physical checks and Spacecraft performance tests will be performed at the launch site prior to integration of the Spacecraft with the launch vehicle.) The software and data tables will be loaded with the appropriate parameters for Orbit Acquisition Initialization and Orbit Acquisition Phase activities.

In the event that the launch is postponed after having gone to internal power, I&T will be responsible for reconfiguring the Spacecraft back to the Ground Test Mode from Launch/Ascent Mode, and the Launch Vehicle contractor will be responsible for reconnecting the T–0 umbilical.

3.2 Launch/Ascent Mode

3.2.1 Functional Overview

The Launch/Ascent Mode is the Spacecraft's operational configuration during and immediately following the boost to the injection orbit on the launch vehicle. Once separation from the launch vehicle is detected by on–board logic and telemetry monitoring, the Spacecraft will use on–board logic to perform four early mission activities, including: (1) an attitude maneuver to obtain an earth–oriented attitude, (2) deployment of the solar array to support the bus load and begin battery recharge, (3) establishment of an S–band communication link, primarily with TDRSS via the omni antennas, and (4) deployment of the high gain antenna. All of these preprogrammed activities shall, as a backup, accept ground commanded initiation, provided that a communication link to the ground has been established.

Launch/Ascent Mode is a primary mode in both the Launch/Ascent and Orbit Acquisition Initialization Phases. This period begins with the transition to internal power on the launch pad and ends when the Spacecraft is ground commanded into Standby Mode after the High Gain Antenna (HGA) is deployed in the injection orbit. All instruments are powered off with survival heater enabled. Housekeeping equipment is powered as required to accomplish the early mission activities

and for low–rate telemetry commanding and telemetry, with survival and operational heaters enabled.

During Launch/Ascent Phase, the Spacecraft operates on internal battery power (i.e., batteries are continually discharging), and only those components essential for monitoring and transmitting Spacecraft health data, maintaining Spacecraft survival, and required for the earth acquisition maneuver are powered at this time. During the Orbit Acquisition Initialization Phase, a stable and operational Spacecraft configuration following separation from the launch vehicle will be established. Upon detection of separation from the launch vehicle, on–board logic will be activated to perform the four major early mission activities described above.

In addition to triggering the execution of the four early mission activities, the detection of separation from the launch vehicle will also enable the FDIR algorithms necessary for the autonomous transition to Survival Mode or Safe Mode in the event of certain failures. These algorithms will remain enabled throughout all subsequent mission phases.

Launch/Ascent Mode is a new mode which was defined because Survival Mode did not adequately represent the operational configuration and power consumption of the Spacecraft during the early mission phases (Launch/Ascent and Orbit Acquisition Initialization Phases). Although the Spacecraft power level in Launch/Ascent Mode is near the minimum power level of Survival Mode, it is possible to transition to Survival Mode by shedding some non–essential housekeeping loads such as the solid state star trackers and all propulsion subsystem equipment except for the pressure transducer.

3.2.2 Entry/Exit

Entry: Ground operators will switch the Spacecraft to the Launch/Ascent Mode when they disconnect the T–0 umbilical, causing the Spacecraft to switch to internal power. If an anomaly occurs after separation from the launch vehicle that causes the Spacecraft to enter Survival or Safe Mode, Launch/Ascent Mode may be re–entered by ground command.

Exit: Nominally, exit from Launch/Ascent Mode to Standby Mode will be ground commanded when all of the major early mission events (e.g. earth acquisition, S–band communication link acquisition, energy balance, and HGA deployment) have been successfully completed. In the event that the launch is aborted or delayed due to a major anomaly prior to liftoff, ground operators will reconnect the T–0 umbilical (to switch back to external power supplies) and transition the Spacecraft from Launch/Ascent Mode to Ground Test Mode. In this event, the mission phase will transition from Launch/Ascent back to Pre–Launch. If an anomaly occurs after the Spacecraft has separated from the launch vehicle, the transition from Launch/Ascent Mode to either Survival Mode or Safe Mode may be commanded either by autonomous on–board logic or by ground command.

Figures 3 and 4 illustrate the allowable mode transitions to enter or exit Launch/Ascent Mode. Table VII summarizes the criteria for transition to the Launch/Ascent Mode from the allowable entry points and for exit from the Launch/Ascent Mode to another mode (the allowable exit points).

Table VII. Launch/Ascent Mode Transition

Allowable Entry Points	Initiation	Criteria
Ground Test Mode	Ground Command	–Transition to internal power –All systems nominal
Survival Mode Safe Mode	Ground Command	–Ground criteria
Allowable Exit Points		
Ground Test Mode	Ground Command	–Abort or delay launch
Survival Mode	On–Board Logic (Autonomous)	–Separation from launch vehicle complete –TMON Load Shed Criteria
Safe Mode	On–Board Logic (Autonomous)	–Separation from launch vehicle complete –Loss of SCC "I'm OK" and/or –GN&C FDIR (attitude error)
Survival Mode Safe Mode Standby Mode	Ground Command	–Ground criteria

3.2.3 Minimum Subsystem Requirements

GN&CS:

- Launch/Ascent Phase – The GN&CS will provide attitude knowledge during launch ascent. The GN&CS will be prepared for earth acquisition maneuvers immediately following separation from the launch vehicle.

- Orbit Acquisition Initialization Phase – The GN&CS will provide attitude determination and navigation. The GN&CS will provide coarse earth pointing control that is sufficient for allowing communication links to be established between the HGA and TDRSS. The GN&CS navigation functions will be supported via either uplinked ephemeris or a TDRSS/TONS link, as available.

C&DHS:

- Launch/Ascent Phase – The C&DHS will monitor Spacecraft equipment and instrument telemetry to ensure health and safety. Commands will be distributed to equipment. Data will be distributed for S–band transmission and for storage on a single operational SSR data control unit. The Spacecraft Bus data processing and distribution will be SCC/CTIU based.

- Orbit Acquisition Initialization Phase – The Spacecraft Bus data processing and distribution will be SCC/CTIU based. The SCC will distribute the stored commands necessary to perform the earth acquisition maneuver, acquire a TDRSS/TONS link, deploy the solar array, and deploy the high gain antenna. Commands will be distributed to instruments and equipment. The C&DHS will monitor Spacecraft equipment and instrument telemetry to ensure health and safety. Data will be distributed for both S–band transmission and storage on a single operational SSR data control unit.

TCS:

- The TCS will maintain operating temperatures on operational housekeeping equipment and survival temperatures for non–operational housekeeping equipment and instruments.

EPS:

- Launch/Ascent Phase – The EPS will provide the necessary power to operating and survival equipment via batteries.
- Orbit Acquisition Initialization Phase – The EPS will provide the necessary power to operating and survival equipment (via batteries until solar array deployment and attainment of Spacecraft energy balance). The EPS will support solar array deployment and slew/rotation to track the sun. The EPS will begin recharging the batteries as soon as possible after solar array deployment. In the anomalous condition that sun–pointing Safe Mode is entered from Launch/Ascent Mode, the EPS will support acquisition of a solar array sun pointing attitude from an arbitrary orientation.

COMMS:

- Launch/Ascent Phase – The COMM subsystem will support a communication link via direct connection to the launch vehicle telemetry stream.
- Orbit Acquisition Initialization Phase – The establishment of low–rate S–band communications links via the omnis with TDRSS and/or GN will be supported. The maintenance of these links will also be supported. The establishment of an S–band communication link via the HGA with TDRSS will be supported (after successful HGA deployment), as well as the maintenance of these links. The COMM subsystem will support the uplink of backup ephemeris for orbit determination. The COMM subsystem will also provide for the acquisition of the TONS link via the omnis and/or the HGA and maintenance of the link, to support orbit determination via TONS.

PROPS:

- Launch/Ascent Phase – The propulsion subsystem will be initialized to provide thruster operations as necessary for tip–off correction maneuvers, earth acquisition, and attitude control. The PMEA and engine catbed heater for six 1–lb thrusters will be enabled.

EAS:

- The EAS will provide power and data distribution for the Spacecraft via harnessing.

3.2.4 Launch/Ascent Mode Operations

The FOT will fully monitor Spacecraft operation during Launch/Ascent Mode because of the critical nature of the early mission activities. The FOT will review the Spacecraft telemetry received via the Launch Vehicle when it becomes available. Spacecraft detection of separation from the Launch Vehicle will initiate the autonomous execution of preprogrammed Orbit Acquisition Initialization activities. After establishment of an S–Band link (using omni antennas) with the ground via TDRSS, the FOT will monitor these Spacecraft activities. The FOT will send ground commands as necessary to establish a stable Spacecraft on–orbit configuration with an earth–oriented attitude.

3.3 Standby Mode

3.3.1 Functional Overview

The Standby Mode is a "non–science" mode that is used during subsystem check–out, during quiescent periods, or as back–up to the Science Mode.

Standby Mode is a primary mode during the Orbit Acquisition Initialization, Orbit Acquisition, and Operational Initialization Phases. During the Orbit Acquisition Initialization Phase, the Spacecraft will be in Launch/Ascent Mode until it receives ground commands to enter Standby Mode, nominally after deployment of the HGA. During the Orbit Acquisition Phase, both Standby and Delta–V Modes are primary system modes. Typically, the system will be in Standby Mode, except during propulsive maneuvers, when it will be in Delta–V mode. During the Operational Initialization Phase, the Spacecraft will normally be in Standby Mode except during propulsive maneuvers and during checkout of instrument science data downlink.

As a backup mode in the Operational Phase, Standby Mode is used when a problem arises with the ability to collect or transmit instrument science data.

Instrument science data collection and transmission is not supported in Standby mode. Standby Mode has full power resources, so that housekeeping and instrument loads will not be shed upon entering this mode. As required during subsystem checkout, both primary and redundant units of components may be powered. The combination of state variables for this mode is defined as Power Load (on), Computer (SCC), Delta–V (no), Attitude (earth), and Science Data (no).

3.3.2 Entry/Exit

Entry:

During the Orbit Acquisition Initialization Phase, the Spacecraft will be ground commanded into

Standby Mode once all of the major early mission of events within Launch/Ascent Mode have been accomplished.

During the Orbit Acquisition Phase, the transition from Delta–V Mode to Standby Mode will be ground commanded after propulsive maneuvers.

During the Operational Initialization phase, the Spacecraft will be ground commanded into the Standby Mode and will remain in this mode during system/ subsystem check–out.

During the Operational Phase, the Spacecraft may be ground commanded into the Standby Mode for quiescent periods or for ground recovery from a non–time–critical fault in the high rate data system. The Standby Mode may be utilized during the ground commanded transition from Survival Mode or Safe Mode back to a higher operating state. Autonomous entry into Standby Mode may be made following a system type failure that prevents or hinders science operation, but does not require significant shedding of Spacecraft loads. Failures which would cause autonomous entry include: 1) HGA FDIR algorithm stops SCC commanding of the HGA if the gimbal motion is grossly inconsistent with commands, 2) TMON disables SCC commanding to the HGA if the HGA gimbal becomes too hot, and 3) TMON detects other problems with the high rate data system that could possibly be critical to associated equipment, such as the solid state recorder.

Exit: Exit from the Standby Mode, to a higher or same level mode, (e.g., to the Science Mode or Delta–V Mode) will be initiated by ground command. In event of a severe power fault, autonomous transition into Survival Mode will be made. Autonomous transition to Safe Mode will occur upon loss of the SCC "I'm OK" or by GN&C FDIR.

Figures 4, 5, 6, and 7 illustrate the allowable mode transitions to enter and exit Standby Mode. Table VIII summarizes criteria for transition to the Standby Mode from an initial mode (allowable entry point) and exit from the Standby Mode to another mode (allowable exit point).

Table VIII. Standby Mode Transition

Allowable Entry Points	**Initiation**	**Criteria**
Any Mode	Ground Command	–Ground criteria
Science Mode	On–Board Logic (Autonomous–SCC) Non–Time–Critical High Rate System Fault (TBD)	–HGA FDIR or TMON –High Rate Data System TMON (TBD)
Allowable Exit Points		
Any Mode	Ground Command	–Ground criteria
Survival Mode	On–Board Logic (Autonomous–SCC)	–TMON Load Shed Criteria
Safe Mode	On–Board Logic (Autonomous)	–Loss of SCC "I'm OK" –GN&C FDIR (attitude error)

3.3.3 Minimum Subsystem Requirement

GN&CS:

- Orbit Acquisition Initialization and Orbit Acquisition Phases – The GN&CS will provide attitude determination and navigation. The GN&CS will provide coarse earth pointing control that is sufficient for allowing communication links to be established between the HGA and TDRSS. The GN&CS primary navigation functions will be supported via either uplinked ephemeris or a TDRSS/TONS link, as available. GN&CS checkout activities will be supported.
- Operational Phase – The GN&CS will provide attitude determination and navigation. Earth–oriented pointing will be maintained. The GN&CS primary navigation functions will be supported via the use of TONS, or as a backup, via uplinked ephemeris, as applicable. GN&CS checkout activities will be supported.

C&DHS: The C&DHS will monitor Spacecraft equipment and instrument telemetry to ensure health and safety. Commands will be distributed to instruments and equipment. Data will be distributed for both S–band transmission and storage on the solid state recorder (SSR). The Spacecraft Bus data processing and distribution will be SCC/CTIU based. Low–rate data handling will be provided. C&DHS checkout activities will be supported.

TCS: The TCS will maintain operating temperatures on all operational housekeeping equipment and instruments and survival temperatures on all non–operational housekeeping equipment and instruments. In the Operational Phase, the TCS may provide limited heat rejection for instruments requiring centralized thermal control. TCS checkout activities will be supported.

EPS:

- Orbit Acquisition Initialization and Orbit Acquisition Phases – The EPS will provide necessary power to operating and survival equipment while maintaining a positive energy balance. Essential power for instruments in non–operational survival will be provided. Solar array slew and rotation (sun tracking) will be provided. EPS checkout activities will be supported.
- Operational Phase – The EPS will provide necessary power to operating and survival equipment while maintaining a positive energy balance. Essential power for instruments in operational standby will be provided. Solar array slew and rotation (sun tracking) will be provided. EPS checkout activities will be supported.

COMMS: The maintenance of S–band communications links with TDRSS and/or GN via the omnis will be supported as a minimum. Although not a minimum requirement, the acquisition and maintenance of a TDRSS HGA S–band link will be accommodated as capable once the HGA is deployed during the Orbit Acquisition Initialization Phase. The COMM subsystem will provide for the maintenance of the TONS link to support coarse orbit determination via TONS, and it will also support the uplink of backup ephemeris for orbit determination, as applicable. COMM subsystem checkout activities will be supported.

PROPS: The propulsion subsystem will support 1-lb thruster operations to provide impulsive torques for on-orbit three-axis attitude control and reaction wheel unloading. Propulsion subsystem checkout activities will be supported.

EAS: The EAS will provide power and data distribution for the Spacecraft via harnessing.

3.3.4 Standby Mode Operations

The Standby Mode is one of the primary modes of the Orbit Acquisition Initialization, Orbit Acquisition, and Operational Initialization Phases. It is also a back up mode of the Operational Phase.

During the Orbit Acquisition Initialization Phase, the main function of the FOT will be to perform subsystem checkout. The subsystem checkout will include the following tests:

- HGA pointing and control
- RF communication configuration tests
- Solid State Recorder control
- C&DHS and COMMS verification

During the Orbit Acquisition Phase, the main function of the FOT will to be make necessary preparations for Delta-V Mode related activities. When the Spacecraft is in Standby Mode between maneuvers, the FOT will verify successful completion of the previous maneuver and will prepare for the next planned maneuver.

During the Operational Initialization Phase, the FOT uses the Standby Mode as a means to perform subsystem checkout. The subsystem checkout will include the following tests:

- Direct Access System (DAS) startup and checkout
- Capillary Pumped Heat Transport System (CPHTS) startup and checkout

During the Operational Mission Phase, the FOT may use the Standby Mode to perform subsystem checkouts when anomalous conditions occur on-board the Spacecraft. The FOT will monitor Spacecraft health and safety data and will track function parameters in support of trend analyses. Based on these findings, the FOT may decide to command the Spacecraft into the Standby Mode. During such times specific functional tests and reconfigurations will be done.

There is a limited number of failures which would cause the on-board Fault Detection, Isolation, and Recovery (FDIR) functions to yield an autonomous transition into the Standby Mode. Table IX summarizes some of the possible functional failures which can yield an autonomous transition to Standby Mode. When other anomalies which are non-time critical (or types which do not impact resource accommodations for science activities) are detected by the FOT, it may decide to perform investigations or calibrations using the Standby Mode.

Table IX. Standby Mode Transition Elements		
Spacecraft Functional Failure	FDIR Function	Comments
Science Data Formatting, Storage, and Transmission	None to date (area under study)	Reaching capacity limit of SSR could cause transition
Command Reception and Distribution	None, System is configured with hot back-up	Command uplink is required to upload the SCC with commands for SSR and resource management.
High Gain Antenna Pointing	High Gain Antenna Algorithm to turn off pointing if temperature goes outside allowable limits or if errors are too high	Hardware components are contained in the COMS and the SMS.

In the event of an anomaly, the FOT will perform tests to isolate the failure per pre-approved procedures, where possible. Once the anomaly has been effectively isolated, a recovery strategy will be exercised, and the impacted Spacecraft function will be verified to be within specifications. The Spacecraft can then be reconfigured back to the primary mode (Science Mode).

3.4 Delta-V Mode

3.4.1 Functional Overview

The Delta-V mode is a "propulsive" mode used to either raise altitude from the injection orbit to mission operational altitude, to circularize the mission orbit, or to provide periodic correction to the mission orbit (e.g., drag makeup). The orbital corrections will either be in-plane maneuvers or out-of-plane maneuvers. This mode is used during the Orbit Acquisition, Operational Initialization, and Operational mission phases.

There are three possible sub-mode or sub-level definitions for Delta-V according to Table IV. The constant state variables are the computer (SCC), Delta-V (yes), and Attitude (earth). The state variables that vary are Power Load (off/on) and Science Data (yes/no). This would give four possibilities, except that the combination of Power Load (off) and Science Data (yes) is not applicable. Thus, at a minimum, in Delta-V Mode, the Spacecraft can be at survival power levels and not supporting science, and at a maximum, it can be at full power, capable of providing science. The combinations of state variables which define these sub-modes are as follows: Delta-V level-0 has Load (off) and Science (no), level-1 has Load (on) and Science (no), and level-2 has Load (on) and Science (yes). The particular Delta-V sub-mode used depends on mission phase and type of maneuver. The performance requirements discussed in Section NO TAG address the minimum state. For all levels of Delta-V Mode the Spacecraft will be required to supply the power for propulsion system initialization, warm-up, and operation. As the mode level is increased, the Spacecraft's functional capability and performance will also increase correspondingly.

Orbit Acquisition Maneuvers: The Spacecraft will perform these maneuvers during the Orbit Acquisition Phase, while in Delta–V mode, level–0. The maneuvers are a combination of out–of–plane inclination corrections and in–plane large delta–V burns. This is the minimum Delta–V mode in terms of Spacecraft capability. Instruments and some high rate data equipment will be in a survival state, and the Spacecraft will be providing only essential services, although the HGA may be available for S–band communication and TONS navigation links.

Orbit Trim Maneuvers: The Spacecraft will perform these maneuvers during the Operational Initialization Phase, nominally while in Delta–V mode level–1. If necessary, the maneuvers could be accomplished while in Delta–V Mode level–0. These maneuvers are a combination of out–of–plane inclination corrections and in–plane altitude adjustment delta–V burns.

Out–of–Plane Mission Orbit Adjust: The Spacecraft will perform inclination correction maneuvers during the Operational Phase while in either Delta–V mode level–1 or level–0, depending on Spacecraft capability. The Spacecraft will reorient to the required out–of–plane maneuver attitude (e.g., 90 degree slew) before performing the delta–V maneuver. Spacecraft systems such as power, thermal, communications will not be operating in the nominal flight attitude and significant performance degradation is possible. Non–essential housekeeping and instrument functions may be powered down if necessary.

In–Plane Mission Orbit Adjust: The Spacecraft will perform drag make–up adjustments to mission altitude or retro–grade altitude corrections during the Operational Phase while in either Delta–V Mode level–2 or level–1, depending on Spacecraft capability. Although instrument science may or may be not supported, all Spacecraft housekeeping functions can remain operational.

3.4.2 Entry/Exit

Entry: Entry into the Delta–V Mode will be made by ground command. In the Orbit Acquisition Phase, it will first occur following successful execution of all Orbit Acquisition Initialization Phase activities (i.e., appendage deployments, establishment of communication and TONS links). Thereafter, in successive mission phases, entry into the Delta–V mode will be ground commanded as necessary.

Exit: Nominal exit from the Delta–V Mode will be made by ground command, following completion of the delta–V maneuver. A loss of the SCC "I'm OK" or detection by the GN&C FDIR of an attitude error beyond a given threshold would cause autonomous entry into Safe Mode and would therefore autonomously abort the maneuver. In the event of a severe power fault while in Delta–V level–2 or level–1, autonomous transition into Delta–V Mode level–0, rather than Survival Mode, will be made. This current operational concept assumes that the TMON load shed does not include turning off thrusters. Also, there will be no autonomous transition from Delta–V level–2 to Standby Mode due to a loss of science data handling capability. In this event, autonomous transition would occur from Delta–V level–2 to Delta–V level–1.

Figures 5, 6, and 7 illustrate the allowable mode transitions to enter or exit Delta–V Mode. Table X summarizes criteria for transition to the Delta–V Mode from an initial mode (allowable entry point) and exit from the Delta–V Mode to another mode (allowable exit point).

Table X. Delta–V Mode Transition

Allowable Entry Points	Initiation	Criteria
Standby Mode	Ground Command	–Successful completion of earth acquisition and attainment of energy balance –Ground Criteria
Science Mode	Ground Command	–Ground Criteria
Allowable Exit Points		
Standby Mode Science Mode Survival Mode Safe Mode	Ground Command	–Ground Criteria
Safe Mode	On–Board Logic (Autonomous)	–Loss of SCC "I'm OK" –GN&C FDIR (attitude error)

3.4.3 Minimum Subsystem Requirements

GN&CS: The GN&CS will provide coarse attitude determination and navigation. Coarse earth–oriented pointing will be maintained. For higher Delta–V sub–mode levels, additional capability (e.g. fine attitude control and pointing) may be provided as applicable. The GN&CS primary navigation functions will be supported via the use of TONS, or as a backup, via uplinked ephemeris, as applicable.

C&DHS: The C&DHS will monitor Spacecraft equipment and instrument telemetry to ensure health and safety. Limited commands will be distributed to instruments and equipment as necessary. Data will be distributed for both S–band transmission and storage on the solid state recorder. The Spacecraft Bus data processing and distribution will be SCC/CTIU based. For higher Delta–V sub–mode levels, additional capability (e.g., high rate data handling and science data handling) may be provided as applicable.

TCS: The TCS will maintain operating temperatures on operating equipment and instruments and survival temperatures for non–operating equipment and instruments. (It is assumed that any out of plane maneuvers to adjust orbit inclination will be performed during the eclipse portion of the orbit. Otherwise, the TCS may not be able to maintain temperatures within allowable limits.) For higher Delta–V sub–mode levels, additional capability may be provided as applicable.

EPS: The EPS will provide necessary power to operating and survival equipment while maintaining a positive energy balance. Essential power for instrument survival and/or science, as applicable, will be provided. The EPS will supply the required electrical power for propulsion system initialization, warm–up and operation. For higher Delta–V sub–mode levels, additional capability (e.g., full power) may be provided as applicable.

COMMS: The COMM subsystem will maintain and reacquire (as necessary) HGA Ku-band and S-band forward and return links with TDRSS and/or GN. It will also maintain and reacquire S-band links through the omnis. The COMM subsystem will provide for the maintenance of the TONS link to support coarse orbit determination via TONS, and it will also support the uplink of backup ephemeris for orbit determination, as applicable. For higher Delta-V sub-mode levels, additional capability (e.g., high rate data link) may be provided as applicable.

PROPS: The Propulsion subsystem will provide impulse for monopropellant delta-V and inclination correction operations to support orbit acquisition and maintenance. The subsystem will also provide impulsive torques for on-orbit three-axis attitude control, three-axis inertial attitude slews, three-axis Earth and sun acquisitions, and reaction wheel unloading.

EAS: The EAS will provide power and data distribution for the Spacecraft via harnessing.

3.4.4 Delta-V Mode Operations

The Delta-V Mode is not a contingency or back-up mode. The FOT normally schedules Spacecraft activities well in advance, approximately 28 days before the maneuver date. All Spacecraft delta-V maneuvers will be performed during scheduled TDRSS contacts.

3.4.4.1 Orbit Acquisition Phase Delta-V Mode Operations

During the Orbit Acquisition Mission Phase, the FOT will perform the first propulsive maneuvers to place the Spacecraft in the operational altitude. The following is a description of the sequence of tasks the FOT will support/perform to achieve this goal:

- During the Pre-Launch Phase, the FOT will have performed the following with Flight Dynamics Facility (FDF) support:
  - Perform orbit maneuver prediction and orbit maneuver planning
  - Compute and uplink orbit maneuver start time, required Delta-V, estimated stop time, and attitude
  - Compute and uplink yaw attitude slew start and estimated stop times.
- The FOT will notify the Flight Dynamics Facility of their intentions to commence the planned maneuver.
- The FOT will command the Spacecraft SCC to begin executing the appropriate Stored Command Table (SCT) and Relative Time Sequence (RTS) commands for Delta-V activities.
- Upon receipt of ground command to commence delta-V activities, the Spacecraft will reconfigure out of the Standby Mode and into the Delta-V Mode.
- The FOT will verify Spacecraft reconfiguration (per SCT) to the Delta-V Mode Level 0 Configuration. The Spacecraft Power Load is already at a minimum from the previous Standby Mode configuration in which instruments and some housekeeping equipment are powered OFF. The SCC

will be in control of Spacecraft activities and will be issuing stored commands from its stored command table (SCT).

- Verify that SCC has commanded power to the propulsion subsystem for initialization and warm–up.
- Verify that the appropriate parameters have been distributed to the propulsion subsystem so that the appropriate algorithm can be implemented. Verify re–pressurization of tanks has occurred if required.
- Verify rate nulling on all axes.
- Verify that Gyro errors are within specification.
- Verify that filter parameters have converged to specification before the Spacecraft reaches the third apogee.
- Verify that ACS thruster burns achieved the appropriate Spacecraft attitude for Spacecraft boost maneuver.
- Verify that the latch valves are open.
- Verify that engine valves open on command.
- Initialize and verify that apogee burns are starting within 30° to 60° before and ending within 30° to 60° after apogee.
- Command Spacecraft mode transition from Delta–V to Standby Mode.
- Verify the delta–v's for each of the thruster burns.
- Verify coarse earth pointing.
- Verify attitude parameter convergence.
- Verify orbit circularization upon completion of the last thruster burn.
- Verify final orbit altitude (705Km).
- Verify that the latch valves are closed.

3.4.4.2 Operational Initialization Phase Delta–V Mode Operations

Spacecraft Delta–V operations will continue into the Operational Initialization Mission Phase. The Delta–V Mode will be used to perform a drag make–up, and orbit adjustments. Fine attitude pointing and orbit correction will be performed in this phase as described below:

- Acquire and verify appropriate navigation and inclination burn data from the Flight Dynamics Facility (e.g. Spacecraft Latitude, Longitude, Pointing, burn magnitudes and direction, etc).
- Uplink inclination burn commands to Spacecraft SCT.
- Initiate and verify Spacecraft inclination burn activities.
  - Verify Spacecraft acceleration vs. time during 90° yaw rotation.

  - Verify Spacecraft acceleration vs. time during inclination burns.
  - Verify Spacecraft acceleration vs. time during –90° yaw rotation.
- Verify that the appropriate Spacecraft inclination (98.2°) has been achieved.
- Command GN&C mode change from Coarse Pointing to Stellar Mode.
- Upload appropriate Telemetry Monitor table parameters.
- Enable Telemetry Monitor monitoring on new table parameters.
- Enable Spacecraft System Operating Mode transition into Standby Mode.
- Command Spacecraft mode transition from Delta–V to another Operational Initialization primary mode (Standby Mode or Science Mode) based on current Delta–V mode level. Nominally, for this phase, the transition will be between Delta–V Mode level–1 and Standby Mode.
- Verify that the appropriate data has been recorded for trend analysis.
- Compute fuel remaining, Spacecraft mass, and center of mass.
- Determine maneuver execution accuracy.
- Determine propulsion system efficiency.

3.4.4.3 Operational Phase Delta–V Mode Operations

The Delta–V Mode will be used periodically to perform occasional inclination burns, drag make–up, and momentum unloading during the Operational Mission Phase. The Spacecraft will be configured to Delta–V Mode Level 2, or lower level as required, prior to commencement of inclination or drag make–up maneuvers. Typically the ground commanded transition will occur from Science Mode into the appropriate Delta–V Mode level for the particular maneuver. Delta–V maneuvers may also be ground commanded from any backup mode during the Operational Phase if necessary.

For occasional inclination burns the FOT will support/perform the following tasks:

- The FDF will perform the following:
  - Perform orbit maneuver prediction and orbit maneuver planning
  - Compute orbit maneuver start time, required Delta–V, estimated stop time, and attitude
  - Compute yaw attitude slew start and estimated stop times.
- The FOT will upload SCT commands for the maneuver.
- The FOT will notify the Flight Dynamics Facility of their intentions to commence the planned maneuver.
- The FOT will command the Spacecraft SCC to begin executing the appropriate Stored Command Table (SCT) commands.
- The Spacecraft will autonomously reconfigure out of the Science Mode and into the commanded Delta–V Mode, typically level–1 for this type of maneuver in this phase.

- The FOT will verify Spacecraft reconfiguration (per SCT) to the Delta-V Mode Level 1 Configuration. The Spacecraft Power Load is already on from the previous Mode (Science) configuration. The SCC will be in control of Spacecraft activities and will be issuing stored commands from its stored command table (SCT). Science data will not be supported during the inclination maneuver due to the Spacecraft orientation.
- Verify that SCC has commanded power to the propulsion subsystem for initialization and warm-up.
- Verify GN&C mode change from Stellar Mode to Coarse Pointing Mode.
- Verify that the latch valves are open.
- Verify that engine valves open on command during maneuver.
- Verify that the latch valves close on command during maneuver.
- Initiate and verify Spacecraft inclination burn activities.
  - Verify Spacecraft acceleration vs. time during 90 yaw rotation
  - Verify Spacecraft acceleration vs. time during inclination burns
  - Verify Spacecraft acceleration vs. time during -90° yaw rotation
- Command Spacecraft mode transition from Delta-V to another Operational mode (Survival Mode, Standby Mode, or Science Mode) based on current Delta-V mode level. Nominally, for this type of maneuver, the transition will be between Delta-V Mode level-1 and Standby Mode.
- Verify that the appropriate Spacecraft inclination (98.2°) has been achieved.
- Command GN&C mode change from Coarse Pointing to Stellar Mode.
- Verify that the appropriate data has been recorded for trend analysis.
- Compute fuel remaining, Spacecraft mass, and center of mass.
- Determine maneuver execution accuracy.
- Determine propulsion system efficiency.

Depending on the propulsion burn magnitude and frequency and the associated impact to Spacecraft attitude and pointing performance, science operations may be supported during drag make-up maneuvers. If the drag make-up maneuvers are performed frequently, low magnitude thruster burns can be used which has less impact on pointing performance. Nominally, the Spacecraft will be configured to Delta-V Mode Level 2 [Science data (yes)] from Science Mode for the drag make-up maneuvers, so that science operations will be supported continuously throughout the maneuver. Ground commanded transitions into lower Delta-V levels for these maneuvers will be accommodated as necessary, whether they originate from Science Mode or other backup modes, exclusive of Safe Mode. These maneuvers will be performed per standard operating procedures.

The FOT will perform all Delta-V maneuvers by standard operating procedures. Contingency maneuvers will be performed per contingency procedures (deboost and contingency retrograde orbit), which will be determined at a later date. All maneuvers will be scheduled and approved prior to actual procedure implementation.

3.5 Science Mode

3.5.1 Functional Overview

The Science Mode is the primary mode used during the Operational Mission phase. During the Operational Initialization Phase, it is one of several primary modes. While in Science Mode, the Spacecraft will provide the full complement of resources necessary to meet science mission objectives during this mode. These resources include fine attitude control; high–rate data handling, storage and transfer; full electrical power; and thermal control. Science Mode is used for instrument check–out activities during the latter portion of the Operational Initialization Phase because full resources, including high–rate data handling, are required for this activity. (Subsystem check–out activities are handled from Standby Mode in the same mission phase, prior to Instrument check–out.) The combination of state variables are defined for this mode as Power Load (on), Computer (SCC), Delta–V (no), Attitude (earth), and Science Data (yes).

3.5.2 Entry/Exit

Entry: Initial entry into the Science Mode will be by ground command from Standby Mode, following successful system/subsystem checkout during the Operational Initialization Phase. Typically, during the Operational Phase, entry into the Science Mode from Delta–V Mode or backup modes will be by ground command following acceptable attitude and environmental conditions, along with the necessary science data processing and communications functions.

Exit: Exit into either the Standby Mode (i.e., for quiescent/checkout operations) or Delta–V Mode will be by ground command. Depending on the type of Spacecraft anomaly, autonomous entry into either the Standby Mode, Survival Mode or Safe Mode is possible. In general a failure which impacts resources required for instrument science will put the Spacecraft into a Standby Mode; a failure which requires significant shedding of both science and housekeeping loads will put the Spacecraft into the Survival Mode; and either a failure which renders either Spacecraft Bus computer (SCC) inoperable or a problem (i.e., attitude error) detected by GN&C FDIR will put the Spacecraft into the Safe Mode. It is also possible to exit into either Survival or Safe Modes by ground command. Ground command will initiate the transition from Operational Initialization Phase to Operational Phase, although the Spacecraft will remain in Science Mode throughout the transition.

Figures 6, 7, and 8 illustrate the allowable mode transitions to enter or exit Science Mode. Table XI summarizes criteria for transition to the Science Mode from an initial mode (allowable entry point) and exit from the Science Mode to another mode (allowable exit point).

Table XI. Science Mode Transition

Allowable Entry Points	Initiation	Criteria
Standby Mode Survival Mode Safe Mode Delta-V Mode	Ground Command	-Science can be supported
Allowable Exit Points		
Standby Mode Survival Mode Safe Mode Delta-V Mode	Ground Command	-Ground Criteria
Standby	On-Board Logic (Autonomous-SCC) Non-Time-Critical High Rate System Fault (TBD)	-HGA FDIR -High Rate System FDIR (TBD)
Safe Mode	On-Board Logic (Autonomous)	-Loss of SCC "I'm OK" -GN&C FDIR (attitude error)
Survival	On-Board Logic (Autonomous-SCC)	-TMON Load Shed Criteria

3.5.3 Minimum Subsystem Requirements

GN&CS: The GN&CS will maintain precision earth-oriented pointing. Fine attitude determination and navigation will be provided. The GN&CS primary navigation functions will be supported via the use of TONS. Instrument check-out activities will be supported.

C&DHS: The C&DHS will monitor Spacecraft equipment and instrument telemetry to ensure health and safety. Full commands will be distributed instruments and equipment. Data will be distributed for both Ku-band transmission and storage on the solid state recorders (SSR). The Spacecraft Bus data processing and distribution will be SCC/CTIU based. High-rate data handling will be provided. Ancillary data and time-tagged navigation data will be provided to the instruments. Instrument check-out activities will be supported.

TCS: The TCS will maintain operating temperatures on all housekeeping equipment and instrument-to-Spacecraft interfaces. The CPHTS will be fully operational, providing full heat rejection for ASTER and MOPITT. Instrument check-out activities will be supported.

EPS: The EPS will provide necessary power to operating equipment while maintaining a positive energy balance. Essential power for operational instruments will be provided. Solar array rotation (sun tracking) will be provided. Instrument check-out activities will be supported.

COMMS: The COMM subsystem will maintain and reacquire (as necessary) HGA Ku–band and S–band forward and return links with TDRSS and/or GN. Both high–rate and low–rate S–band links will be supported. The COMM subsystem will provide for the maintenance of the TONS link to support fine orbit determination via TONS, and it will also support the uplink of backup ephemeris for orbit determination, as applicable. Instrument check–out activities will be supported.

PROPS: The propulsion subsystem will support 1–lb thruster operations to provide impulsive torques for on–orbit three–axis attitude control and reaction wheel unloading. Engine valve heaters will be enabled. Instrument check–out activities will be supported.

EAS: The EAS will provide power and data distribution for the Spacecraft via harnessing. Instrument check–out activities will be supported.

3.5.4 Science Mode Operations

In the latter portion of the Operational Initialization Phase, the Science Mode will be used for Instrument check–out activities.

During the Operational Phase, the FOT will perform numerous routine tasks in support of the Science Mode. The routine FOT support tasks include:

- Spacecraft Stored Command Table Management
- Conflict Free Scheduling
- Trend Analyses
- Health & Safety Monitoring
- Real–Time Commanding
- Solid State Recorder Management
- Resource Management
- Planning & Scheduling
- Performance Monitoring and Assessment
- High Rate Data System Management

3.6 Survival Mode

3.6.1 Functional Overview

The Survival Mode is a minimal power or power critical mode in which only essential Spacecraft functions (e.g., low–rate commanding/telemetry, survival heaters) will be supported. For the End–of–Mission Phase, Survival Mode is a primary mode; in all other mission phases except Pre–Launch, Survival Mode is a backup mode that is entered upon a power critical situation which requires that non–essential loads be shed. Transition into the survival mode will cause non–essential housekeeping equipment and instruments functions to power–down. The SCC will maintain full control of the Spacecraft while in the Survival Mode. The combination of state variables for this mode is defined as Power Load (off), Computer (SCC), Delta–V (no), Attitude (earth), and Science Data (no).

3.6.2 Entry/Exit

Entry: Autonomous transition into the Survival Mode should only occur under an extreme circumstance that puts the Spacecraft in a power critical situation. The autonomous transition is triggered by TMON, based on load shed criteria, including, but not restricted to, the loss of solar array pointing or loss of energy balance (battery DOD exceeds 40%). In general, autonomous transition into this mode will be from higher functional states such as the Science and Standby modes and will only occur for those mission phases where Survival is a backup, not a primary mode. Ground commanded entry into the Survival Mode is possible from any system mode. The Survival Mode may be entered during the transition from Safe Mode back to a higher operating state.

Exit: Exit from the Survival Mode to a higher level or same level mode will be ground commanded. However, autonomous exit from Survival Mode to Safe Mode will be accomplished by on-board logic in the event of either a failure of the SCC or an attitude control error that exceeds FDIR thresholds.

Figures 4, 5, 6, 7, and 8 illustrate allowable mode transitions to enter or exit Survival Mode. Table XII summarizes criteria for transition to the Survival Mode from an initial mode (allowable entry point) and exit from the Survival Mode to another mode (allowable exit point).

Table XII. Survival Mode Transitions

Allowable Entry Points	**Initiation**	**Criteria**
Science Mode Standby Mode Safe Mode Delta-V Mode Launch/Ascent Mode	Ground Command	-Ground criteria
Science Mode Standby Mode Launch/Ascent Mode	On-Board Logic (Autonomous-SCC)	-TMON Load Shed Criteria
Allowable Exit Points		
Safe Mode	On-Board Logic (Autonomous)	-Loss of SCC "I'm OK" -GN&C FDIR (attitude error)
Science Mode Standby Mode Safe Mode Delta-V Launch/Ascent Mode	Ground Command	-Ground criteria

3.6.3 Minimum Subsystem Requirements

GN&CS: The GN&CS will provide attitude determination and navigation. Coarse earth–oriented pointing will be maintained and/or (re)acquired as necessary. The GN&CS primary navigation functions will be supported via the use of TONS, or as a backup, via uplinked ephemeris, as applicable.

C&DHS: The C&DHS will monitor Spacecraft equipment and instrument telemetry to ensure health and safety. Commands will be distributed to instruments and equipment. Housekeeping telemetry will be distributed for both S–band transmission and storage on the solid state recorders. The Spacecraft Bus data processing and distribution will be SCC/CTIU based. Stored commands will be distributed to initiate load shedding upon entry to Survival Mode.

TCS: The TCS will maintain operating temperatures on operating housekeeping equipment and survival temperatures for non–operating housekeeping equipment and instruments.

EPS: The EPS will provide necessary power to operating and survival equipment while maintaining a positive energy balance. Essential power for instruments in survival will be provided. Load shedding will be used where necessary. Solar array slew and rotation (sun tracking) will be provided, as available.

COMMS: The maintenance and reacquisition of S–band communications links with TDRSS and/or GN will be supported through the omni antenna. The COMM subsystem will provide for the maintenance of the TONS link to support coarse orbit determination via TONS, and it will also support the uplink of backup ephemeris for orbit determination, as applicable.

PROPS: The propulsion system will survive in a quiescent mode, providing tank pressure and subsystem temperature status telemetry. As necessary, the propulsion subsystem will support 1–lb thruster operations to provide impulsive torques for on–orbit three–axis attitude control and reaction wheel unloading. Engine valve heaters will be enabled.

EAS: The EAS will provide power and data distribution for the Spacecraft via harnessing.

3.6.4 Survival Mode Operations

3.6.4.1 Survival Mode as Primary Mode

Survival Mode is the primary mode during the End–Of–Mission Phase. Limited direct involvement by the FOT is necessary, assuming nominal conditions.

3.6.4.2 Survival Mode as Backup Mode

The Survival Mode is a backup mode in the event of critical power failures during the Launch/Ascent, Orbit Acquisition Initialization, Orbit Acquisition, Operational Initialization and Operational Phases. During these phases, the transition into the Survival Mode will be due to an anomalous power condition. Table XIII lists some of the possible functional failures which can yield a transition into Survival Mode.

Table XIII. Survival Mode Transition Elements		
Spacecraft Functional Failure	FDIR Function	Comments
Power Generation and Regulation Failure	Telemetry Monitor	TMON should monitor Bus voltage, Battery state of charge, Bus load current, Battery V/T level, etc.
Energy Storage Failure	Telemetry Monitor	TMON should act on a Battery Depth of Discharge of greater than 40%
Solar Array Rotation Failure	Solar Array Algorithm	Solar Array Algorithm will do a slew of up to 180°

When an anomalous power condition signals the need to transition to Survival Mode, the on–board Telemetry Monitor will initiate a predefined load shed Spacecraft configuration. The SCC will reconfigure the Electrical Power Subsystem for the Battery Power Conditioner (BPC) to use the maximum charge rate and will reset the battery Voltage–Temperature (V–T) limits.

The FOT will begin performing failure analysis (contingency) procedures to identify and isolate the failure on–board the Spacecraft upon realization that the Spacecraft is in the Survival Mode. After isolation of the failed component, the FOT will execute a recovery strategy and verify Solar Array auto sun tracking and normal EPS operating conditions (i.e., Bus voltage regulation at 120 Volts ±4%, and proper battery energy management). Successful verification of these functions implies that the EPS is capable of performing its power generation and regulation functions autonomously and that ground initiated exit from Survival Mode may begin. To accomplish this transition properly the FOT will:

- Monitor and verify that the SCC battery state of charge parameter values are correct as compared to the EPS values
- Verify/command the SCC Power Subsystem Monitoring Algorithm to reconfigure to the appropriate V–T curve and support battery charging
- Verify 100% battery state of charge before entering Spacecraft eclipse
- Sequentially power up and initialize the loads which were shed
- Verify energy management and successful load power management
- Command the Spacecraft out of the Survival Mode

Off–line failure analysis will be performed during the execution of these procedures so as to expedite exit from the Survival Mode and support necessary in–depth analyses and tests where applicable.

3.7 Safe Mode

3.7.1 Functional Overview

The Safe Mode is a state in which the Spacecraft is capable of operating partially or completely independent of the SCC depending on the problem which caused the entry into Safe Mode. Specifically, the Spacecraft will be considered operating in the Safe Mode as long as the attitude

control electronics (ACE) performs the attitude control processing functions (i.e., the state variable Computer is either ACE or ACE/SCC). The other constant state variable is Delta–V (no), since it is assumed that no maneuvers will occur while in Safe Mode (although ACS thrusters may be used). The possibility of performing ground commanded maneuvers in Safe Mode is not precluded by design; however, this situation represents a major contingency scenario which is not anticipated.

The state variables which may vary are Load Power (on/off), Attitude (earth/sun) and Science Data (yes/no). After eliminating all possible combinations which are not applicable, nine sub–modes exist, as summarized in Table IV. The lowest level of these (level–0) is Power Load (off), Computer (ACE), Delta–V (no), Attitude (sun), and Science Data (no). The highest level (level–8) is Power Load (on), Computer (ACE/SCC), Delta–V (no), Attitude (earth) and Science Data (yes). The sub–mode which the Spacecraft will autonomously enter depends upon the fault and the previous Spacecraft mode. Once the Spacecraft is in Safe Mode, autonomous transition from levels with higher functionality to levels with lower functionality can only occur for those levels where the SCC is operational (sublevels 4 through 8). The ACE alone will not contain the necessary FDIR software to initiate the transition. When the SCC is operational, TMON and the GN&C FDIR algorithm will trigger the necessary level transitions within Safe Mode.

The minimum functional state is called "level– 0." The SCC is not functional in this level and only those housekeeping components connected to the Safe Hold Digital Processor (SHDP) within the ACE, such as the attitude control actuators, will utilize ACE processing. The power, thermal, and communications subsystems will operate without ACE support. The next higher level, "level–1", differs only in that ACE attitude control is earth–pointing, rather than sun–pointing. Level–2 has sun pointing and a full power load. Level–3 has earth pointing and a full power load. Level–4 is similar to level–0 (i.e., shed load and sun pointing); however, there is now partial SCC control. Level–5 differs from level–4 in that attitude control is earth oriented. Level–6 has partial SCC control, a full power load, and sun pointing. Level–7 has partial SCC control, a full power load, and earth pointing. Level–8, the highest level of Safe Mode, has the same configuration as level–7, but with the capability to support science operations.

The performance requirements discussed in Section 3.7.3 address the level–0 state. As the level is increased, the Spacecraft's functional capability and performance will also increase correspondingly. A more detailed description of the different levels of Safe Mode is given in EOS–DN–SE&I–012, Rev. A.

The Safe Mode is a back–up mode that may be used during the Orbit Acquisition Initialization, Orbit Acquisition, Operational Initialization, Operational, and End–of–Mission phases.

3.7.2 Entry/Exit

Entry: Autonomous entry into Safe Mode can only occur under two circumstances. The first is the loss of the SCC "I'm OK" signal and the second is the detection by GN&C FDIR of attitude control parameters which are not within limits.

Autonomous Spacecraft entrance into the Safe Mode due to the first circumstance will only occur if the CTIU and/or the ACE senses the loss of "I'm OK" signal from the SCC during two consecutive major cycles. The SCC operation is monitored by the Software FDIR, and upon failure of any one

of the following checks, it withholds the SCC "I'm OK": (1) Memory Check, (2) Execution Time Check, and (3) Command Path Test. In addition, the SCC "I'm OK" will be withheld in the event that the SCC crashes, which might occur if: (1) a software fault causes an SCC to go down, (2) an unforeseen system fault causes an SCC to go down, (3) an operations error places the Spacecraft in a state that the SCCs cannot control, or (4) an SCC I/O service failure occurs. Even if the SCC has not failed, transition to Safe Mode will occur due to a failure of other C&DHS equipment (e.g. the CTIU) or the ACE in such a manner that the SCC "I'm OK" delivery to the ACE is inhibited. When entry into Safe Mode has occurred due to loss of the SCC "I'm OK", certain sub–levels of Safe Mode then become inaccessible upon further failure. In this case, unless there was already a shed load power condition (e.g., previous mode was Survival), it is not possible to enter subsequent Safe Mode levels involving a shed load, because the necessary TMON functions reside in the SCC, which is no longer functional. Similar restrictions apply to the transition, within Safe Mode, from earth–pointing to sun–pointing. Without SCC functionality, autonomous entrance into subsequent levels involving sun–pointing is impossible because the necessary TMON functions are unavailable. These restrictions based on SCC operability do not preclude ground commanded transition to any level.

Autonomous entrance into Safe Mode due to the second circumstance will occur if the SCC switches attitude control to the ACE because the GN&C FDIR detects an attitude error beyond a given threshold. The SCC would switch attitude control to the ACE via a BDU command message if (1) either earth sensor reports a loss of the earth, or (2) the difference between the two earth sensor signals exceeds an allowable limit. The thresholds which initiate autonomous transitions will vary according to system mode, since different modes have different minimum requirements with respect to attitude control. Depending on the reason for the attitude error, the ACE will switch to either backup earth pointing or to sun pointing. The SCC will continue to perform all other functions, excluding attitude control, as it did prior to the transition. As long as the SCC remains functional, TMON will be capable of initiating, as necessary, further autonomous transitions (e.g. earth–pointing to sun–pointing or full power load to shed power load) within Safe Mode. The details of the GN&C FDIR algorithm which causes entry into Safe Mode and the thresholds which trigger it will depend on which mission phase the Spacecraft is in and/or the previous system mode in which the Spacecraft was prior to the transition to Safe Mode. This detail is given in both EOS–DN–SE&I–027 and EOS–DN–SE&I–012, Rev. A.

The Spacecraft can be ground commanded into Safe Mode during all post–separation mission phases.

Exit: Exit from the Safe Mode into another mode is made by ground command following verification that the SCC is functional and capable of controlling the Spacecraft and/or that the ACE is no longer needed for attitude control. The specific higher level mode (nominally either Survival, Standby, or Science Mode) into which the Spacecraft is commanded will depend not only on ground decision and full SCC functionality but also on the functionality of other Spacecraft resources. In other words, Spacecraft functionality at the time of the transition depends on which Safe Mode level is currently in effect. In the case of a Safe Mode with a load shed, exit can occur to Survival by ground command with the load still shed, given that all other of the above conditions are met (full SCC, no ACE).

Table XIV. Safe Mode (Level 0)

Allowable Entry Points	Initiation	Criteria
Any Mode	Ground Command	–Ground criteria
Science Mode Standby Mode Delta–V Mode Survival Mode Launch/Ascent Mode	On–Board Logic	–Loss of SCC "I'm OK" or –GN&C FDIR (attitude error)
Allowable Exit Points		
Survival Mode Standby Mode Science Mode	Ground Command	–Ground criteria

Table XIV summarizes criteria for transition to the Safe Mode from an initial mode (allowable entry point) and exit from the Safe Mode to another mode (allowable exit point).

3.7.3 Minimum Subsystem Requirements

GN&CS: The GN&CS will provide coarse earth–oriented or sun–oriented pointing, which will be maintained and/or reacquired from an unknown attitude as necessary. The ACE will provide attitude control processing. The GN&CS will be capable of performing these minimum functions without SCC software support.

C&DHS: The C&DHS will provide a mode entry indication to each instrument. The C&DHS will allow ground monitoring of Spacecraft equipment to ensure health and safety. Ground commanding will be accommodated. Data will be distributed for both S–band transmission and storage on the solid state recorders. The C&DHS will provide command & telemetry services to all instruments and subsystems, although ground commanded reconfiguration may be required to reestablish this capability after certain failures.

TCS: The TCS will maintain operating temperatures on operating housekeeping equipment and instruments, and survival temperatures for non–operating housekeeping equipment and instruments. The TCS will be capable of performing these necessary minimum functions without SCC software or ACE support. At higher levels, the TCS will provide heat rejection for the instruments using CPHTS.

EPS: The EPS will provide necessary power to operating and survival equipment while maintaining a positive energy balance. Essential power for instruments in survival will be provided. Load shedding will be used where necessary to transition from higher Safe Mode levels to lower levels. Solar array slew and rotation (sun tracking) will be provided. The EPS will support reacquisition of the solar array sun pointing from an arbitrary orientation of the solar array. The EPS will be capable of performing these minimum functions without SCC software or ACE support.

COMMS: The maintenance and reacquisition of low-rate S-band communications links through the omni antenna with TDRSS and/or GN will be supported. When the SCC is non-operational, the TONS link will not be supported. The COMS will be capable of performing these minimum functions without SCC software or ACE support.

PROPS: The Propulsion subsystem will provide impulsive torques for on-orbit three-axis attitude control, three-axis inertial attitude slews, three-axis Earth and sun acquisitions, and reaction wheel unloading. Engine valve heaters will be enabled. The propulsion system will provide tank pressure and subsystem temperature status telemetry. The PROPS will be capable of performing these minimum functions without SCC software or ACE support.

EAS: The EAS will provide power and data distribution for the Spacecraft via harnessing.

3.7.4 Safe Mode Operations

Table XV lists some of the possible functional failures which can yield a transition into Safe Mode. These failures, among others, will yield a transition to one of nine Safe Mode levels. The FOT has the task of supporting Spacecraft functions, resolving the anomaly, and getting the Spacecraft out of Safe Mode. The Spacecraft state variables governing the Spacecraft modes and Safe Mode levels are prioritized:

- Attitude
  Of primary importance, the FOT will perform tasks to get the Spacecraft in an earth pointing attitude.
- Computer
  The FOT will get the redundant (or primary) SCC on-line in order to facilitate operations, make use of SCC functions, and have sufficient support to perform Delta-V maneuvers if necessary.
- Power Load
  The FOT will verify Power Subsystem functionality and accommodate power to the loads which were shed.
- Science Data
  The FOT will configure the Spacecraft to provide all of the resources required to support full science data formatting, storage, and transmission.

Table XV. Safe Mode Transition Elements

Spacecraft Functional Failure	FDIR Function	Comments
Software Execution and Hardware I/O Services	Software Algorithm, and Hardware "I'm OK" inhibit	SCC anomaly, SCC I/O control anomaly
Attitude Determination and Control	GN&C Algorithm	Attitude error, based on mode dependent thresholds

3.8 Instrument Accommodation

This section describes the resources and commands provided to Instruments in each Spacecraft system mode. Instrument operating modes are described in general terms in order to describe how Instrument operation modes correspond to the various Spacecraft system modes.

3.8.1 Instrument Operating Modes

In general, Instruments will have three different types of operating modes – operational mode, survival mode, and safe mode. These three modes are explained below:

a. The Instrument operational mode will be used during the Spacecraft Science mode, when the Spacecraft and Instruments are performing all of the functions to fulfill the science mission. The Instrument operational mode may be comprised of several operational states (e.g. imaging, standby, calibration, etc.) which together comprise its full scope of science operations.

b. The Instrument survival mode is a non–operational state in which only survival equipment is powered. Survival mode is the Instrument's minimal power consumption state. It is recommended that the Instrument reconfigure itself when it transitions to survival mode so that it will be insensitive to possibly high incident energy levels in the event that the Spacecraft assumes some non–nominal attitude. Such reconfiguration might include actions such as shutting aperture doors and covers or rotating apertures into the instrument assembly for protection.

c. The Instrument safe mode is an operational state in which the Instrument is configured to be insensitive to non–nominal Spacecraft attitudes (as described in b above) and to survive a sudden loss of power without damage. Although Instrument safe mode is essentially a non–science mode, the Instrument may elect to continue operation of certain components (e.g. Stirling cycle coolers) in order to minimize the time required to resume science operation once the Spacecraft transitions out of Safe Mode. However, continued power to operate these components cannot be guaranteed in the event that the Spacecraft must transition to a lower level of Safe Mode.

3.8.2 Instrument Mode Transitions

Instrument mode transitions will typically be accomplished by executing a series of RTS commands. The command sequence may be sent by ground command, and, in certain predefined contingency situations, the Spacecraft FDIR system will autonomously send commands to switch the Instrument modes.

Three autonomous methods are available to switch the instruments to the Instrument safe mode:

- When the GN&C FDIR detects the existence of a Spacecraft attitude condition that meets the criteria to enter Spacecraft Safe Mode, the SCC will send an affirmative "goto safe mode" command to the Instruments.
- When the CTIU detects the loss of the SCC "I'm OK" signal for two consecutive major cycles, it will automatically send an affirmative "goto safe mode" command to the Instruments.

- The Instruments will control their own transition to safe mode when they detect the loss of the SCC "I'm OK" signal for five consecutive major cycles.

Since the SCC retains control of the Spacecraft during Spacecraft Survival Mode, the only autonomous method to transition Instruments to survival mode is for the SCC to send an affirmative "goto survival mode" command.

In Spacecraft Survival Mode and in the levels of Safe Mode which require load shed, the SCC will send commands to switch the power relays that distribute power within the Instrument, thereby shedding all Instruments loads except survival equipment.

Instruments are required to complete the transition to safe mode or survival mode within 30 seconds of receiving the appropriate command or detecting the loss of the SCC "I'm OK" signal. The Spacecraft will wait for at least 30 seconds after sending these commands before shedding instrument power loads or proceeding with safe mode attitude maneuvers.

3.8.3 Correspondence Between Instrument and Spacecraft Operating Modes

Table XVI maps Instrument operating modes into Spacecraft operating modes.

Instruments will be in their operational mode when the Spacecraft is capable of maintaining an earth–oriented attitude and of supplying the minimum power and thermal resources to support safe Instrument operation. The Spacecraft operating modes which meet these criteria for Instrument operational mode are Science Mode, Standby Mode, and the highest levels of Delta–V Mode (level 2) and Safe Mode (level 8). Except for Science Mode, these Spacecraft operating modes will probably not allow useful science data generation to continue. Science data transmission is not supported during Spacecraft Standby Mode. In Delta–V Mode and Safe Mode, the Spacecraft does not support fine pointing control, so that Instrument observation data may not meet the resolution required for science objectives. Also, if Instruments have reconfigured to be insensitive to plume contamination or non–nominal Spacecraft attitudes on entering Delta–V or Safe Mode, science data collection may not be possible.

Instrument survival mode is the nominal operating mode during all phases from Prelaunch until the Spacecraft housekeeping subsystems have been checked out in the Operational Initialization Phase; therefore, it is the only Instrument mode during Spacecraft Ground Test and Launch/Ascent Modes. This mode is also the nominal Instrument operating mode whenever the Spacecraft is in Survival Mode or when load shedding occurs in a lower level of Spacecraft Safe or Delta–V Modes.

Instrument safe mode will only occur when the Spacecraft is in Safe Mode.

Table XVI. Instrument Operating Modes Mapped Into Spacecraft Operating Modes

Instrument Operating Modes	Spacecraft Operating Modes						
	Ground Test Mode	Launch/ Ascent Mode	Standby Mode	Science Mode	Delta-V Mode	Survival Mode	Safe Mode
Operational Mode			X[1]	X	X[2]		X[2]
Survival Mode	X	X	X		X	X	X[3]
Safe Mode							X

[1]– Science data transmission is not supported in Spacecraft Standby Mode, but the Spacecraft maintains an earth-oriented attitude and provides the power and thermal resources for safe Instrument operation.
[2] – In the highest levels of Delta-V Mode (level 2) and Safe Mode (level 8), the Spacecraft provides the resources for Instrument operation, but fine pointing control is not supported.
[3] – In certain levels of Spacecraft Safe Mode, non-essential power loads are shed. This table assumes that the Instrument survival mode configuration is identical to its safe mode configuration after the Spacecraft has commanded its power switches to shed all loads except survival equipment.

3.8.4 Resources Provided to Instruments in Each Spacecraft Operating Mode

Table XVII summarizes the status of Instruments and the resources provided to Instruments in each Spacecraft operating mode.

In all on-orbit modes in which the SCC is operating, the Spacecraft FDIR system, including TMON, is available to monitor certain Instrument health and safety telemetry and to switch Instrument hardware as required for Instrument safety. (FDIR may be disabled by ground command.) The number of Instrument parameters to be monitored by TMON will be limited and will be defined in the C&DH Interface Control Document (ICD) for each Instrument. Generally, the telemetry monitored by TMON should be time-critical parameters which, if they exceed of a predefined range, would require an autonomous response to ensure Instrument safety.

3.8.4.1 Ground Test Mode

The FOT will monitor Instrument telemetry to verify health and safety status. Instruments will be in their survival mode with only survival heaters enabled. The Spacecraft TCS will maintain all instrument interfaces within survival temperature limits.

3.8.4.2 Launch/Ascent Mode

Instruments will be in their survival mode with only survival heaters enabled. The Spacecraft TCS will maintain all instrument interfaces within survival temperature limits.

During the Launch/Ascent mission phase, the FOT will monitor Instrument telemetry as it is

received via the launch vehicle communication link to verify health and safety status. After the Spacecraft separates from the launch vehicle, Instrument telemetry will be transmitted to the ground via the Spacecraft S-band communication link. Once separation from the launch vehicle occurs, TMON will monitor certain Instrument health and safety telemetry as defined in the C&DH ICD, and the FDIR system will be capable of autonomously switching Spacecraft and Instrument hardware to protect against time critical failures.

3.8.4.3 Standby Mode

In Standby Mode during the Orbit Acquisition Initialization and Orbit Acquisition Phases, Instruments will be in their survival mode with survival heaters enabled. The Spacecraft TCS will maintain all Instrument interfaces within survival temperature ranges.

In Standby Mode during the Operational Initialization and Operational Phases, Instruments will be in their operational mode, with the Spacecraft supplying full power and thermal resources. Science data handling capability (collection, distribution, or transmission) will not be provided.

At all times in Standby Mode, Instrument health and safety telemetry will be transmitted via the Spacecraft S-band communications link. As defined in the C&DH ICD, the Spacecraft FDIR system, including TMON, will monitor certain Instrument health and safety telemetry and will switch Instrument hardware as required for Instrument safety.

There is currently no plan to notify Instruments of transition to Standby Mode by sending a command via the normal command path. Instruments will be transitioned from survival to operational modes via ground command.

3.8.4.4 Delta-V Mode

There are three levels of Delta-V Mode. During all Delta-V Mode sublevels, Instrument health and safety telemetry will be transmitted via the Spacecraft S-band communications link. As defined in the C&DH ICD, the Spacecraft FDIR system, including TMON, will monitor certain Instrument health and safety telemetry and will switch Instrument hardware as required for Instrument safety. The Spacecraft will enter Delta-V Mode by ground command, and Instruments may receive "goto Survival Mode" or "goto Safe Mode" command sequences as described in sections 3.8.4.6 and 3.8.4.7, respectively.

During Delta-V level-0, Instruments are in their survival mode, being powered off with covers shut and survival heaters enabled. The Spacecraft TCS will maintain all instrument interfaces within survival temperature limits. This is the nominal mode for the orbit acquisition burns and a contingency mode at other times.

During Delta-V level-1, Instruments are in their operational mode but the Spacecraft will not transmit any science data. This is the nominal mode for orbit adjust maneuvers. Instruments may reconfigure to close aperture doors or to rotate their apertures in order to protect against contamination. The Spacecraft will provide full power and thermal resources.

During Delta–V level–2, Instruments are in their operational mode, and the Spacecraft will continue to transmit any science data which is generated. (The usefulness of the data will depend on the Instrument's sensitivity to pointing disturbances.) Instruments may reconfigure to close aperture doors or to rotate their apertures in order to protect against contamination. The Spacecraft will provide full power and thermal resources. This sublevel of Delta–V may be used during short, in–plane maneuvers.

3.8.4.5 Science Mode

Entry into Science Mode will be via ground command. Instruments will be configured appropriately as part of normal ground command uploads. Full power, data, and thermal resources will be supplied to Instruments as required for science data generation or calibration, as applicable. Instrument health and safety telemetry will be transmitted via the Spacecraft S–band communications link. As defined in the C&DH ICD, the Spacecraft FDIR system, including TMON, will monitor certain Instrument health and safety telemetry and will switch Instrument hardware as required for Instrument safety. Science data handling capability (collection, distribution, or transmission) will be provided. Spacecraft ancillary data will be provided to all Instruments. Instruments will receive an "I'm OK" signal from the SCC once every major cycle while in Science Mode. Instrument aperture covers will remain open, unless already closed for other reasons.

3.8.4.6 Survival Mode

Instruments will receive a command sequence, via the normal command path, to go to their survival mode. Instruments are expected to shut down so that only survival equipment remains operational. It is also recommended that instruments close aperture doors and covers or otherwise reconfigure in order (a) to protect themselves in the event that Safe Mode (possibly sun–pointing) is entered from Survival Mode, and (b) to minimize heater power consumption by reducing heat loss through aperture openings.

Instrument health and safety telemetry will be transmitted via the Spacecraft S–band communications link. As defined in the C&DH ICD, the Spacecraft FDIR system, including TMON, will monitor certain Instrument health and safety telemetry and will switch Instrument hardware as required for Instrument safety. The Spacecraft TCS will maintain all instrument interfaces within survival temperature limits.

3.8.4.7 Safe Mode

Resources available to Instruments will depend on the Spacecraft Bus capability, which is reflected by the Safe Mode sublevel in effect. The nature of the anomaly and the actions of the FDIR system will determine the sublevel of Safe Mode. From a housekeeping perspective, there are several possible safe mode configurations depending upon the attitude, the status of the SCC, and the status of the power load. These configurations are denoted levels 0 – 8 and are summarized in Table IV.

One "goto Safe Mode" command will be sent to the Instruments, regardless of the sublevel of Safe Mode which the Spacecraft enters. As an additional precaution, Instruments are required to monitor the SCC "I'm OK" signal and autonomously reconfigure for Safe Mode whenever this signal is

missed for five consecutive major cycles. During Safe Mode sublevels 4 through 8, the Instrument will continue to receive the SCC "I'm OK" signal despite having received the "goto Safe Mode" command.

Because neither the "goto Safe Mode" command nor the timeout of the SCC "I'm OK" signal will convey any information about the sublevel of Safe Mode to be entered, it is recommended that the Instruments assume the same configuration for either indication. The Instrument safe mode configuration must have survival heaters enabled and must have components configured such that no damage will occur if operational power is pulled abruptly. (Survival equipment will continue to be powered in the event that non-essential Instrument loads are shed.) It is recommended that the Instruments reconfigure to protect themselves against the possibility that the Spacecraft will assume a sun-pointing or non-nominal attitude. This type of reconfiguration that protects sensors also helps to minimize Instrument heater power consumption.

The sequence of events leading to Safe Mode will vary depending on the nature of the anomaly:

- SCC Failure: If the SCC fails, then the ACE assumes responsibility for maintaining an earth-pointing Spacecraft attitude. Sensing the timeout of the SCC "I'm OK" signal, the CTIU will send an affirmative "goto Safe Mode" command to the Instruments. The Instruments will no longer receive the SCC "I'm OK" signal. Without an operational SCC, further autonomous Spacecraft reconfiguration is not possible, so that ground commands are necessary to shed non-essential power loads or to transition to a sun pointing Spacecraft attitude. Unless ground commands are executed, Spacecraft attitude and the power and thermal resources provided to the Instruments will remain the same as before the SCC failure. (This sequence describes Safe Mode levels 0, 1, 2, and 3.)

- GN&C FDIR triggers Earth Pointing Safe Mode: If the GN&C FDIR triggers an earth pointing Safe Mode, the SCC will send a relative time sequence (RTS) to the Instrument which includes an affirmative "goto Safe Mode" command. The SCC "I'm OK" signal will continue to go to the Instruments because the SCC is still operating. (This sequence describes Safe Mode levels 5, 7, and 8.)

- GN&C FDIR Triggers Sun Pointing Safe Mode: If the GN&C FDIR triggers a sun-pointing Safe Mode, then the SCC sends an RTS to the Instrument which includes an affirmative "goto Safe Mode" command. This RTS would also command the ACE to sun pointing mode with the appropriate housekeeping equipment reconfigurations, and it may include a delay sufficient for Instrument reconfiguration. The SCC "I'm OK" signal continues to go to the Instrument because the SCC is still operating. (This sequence describes Safe Mode levels 4 and 6.)

In all levels of Safe Mode, Instrument health and safety telemetry will be relayed to the ground for direct ground monitoring. Instruments will accept commands as available from the ground through the CTIU and/or from on-board software via the C&DHS (SCC). Because the SCC may be inoperational during Safe Mode, TMON and the Spacecraft FDIR system may not be available to monitor Instrument time-critical health and safety telemetry.

Instrument survival equipment will be powered in all levels of Safe Mode. Although Instruments may choose to continue to operate components other than survival equipment in their safe mode configuration, the Spacecraft may abruptly cut off power to non-survival equipment. Due to potentially hazardous environments (e.g., Spacecraft sun-pointing attitude), Instrument health cannot be guaranteed if it has not reconfigured to protect its apertures.

At the highest level of Safe Mode (level-8), Instruments will be supplied full thermal and power resources. In addition to transmitting Instrument health and safety telemetry via the S-band communication link, TMON will be available to monitor Instrument telemetry as defined in the C&DH ICD. Science data handling capability (collection, distribution, or transmission) will be provided. If Safe Mode is entered autonomously, the Instruments will have reconfigured to protect their apertures and will have gone to safe mode power levels. In this event, Instruments may be ground commanded to resume their operational mode when the Spacecraft is in this highest level of Safe Mode.

3.9 System Performance Requirements

The resources, services, and entry conditions for each Spacecraft system mode are summarized in Table XVIII.

Key system performance requirements for each mission operating mode are provided in Table XIX. Minimum capability for communication link utilization is summarized in Table XX. These requirements, which include power generation, data, pointing, heat rejection, and communication link utilization, represent a "minimum" system capability that must be provided in a given mode. These minimum requirements do not preclude utilizing additional Spacecraft Bus capability, if system conditions and constraints permit. This especially applies to Delta-V and Safe Mode which have been defined as having various levels of capability, or sub-modes. It also applies to Standby Mode, which has different functional capability depending on mission phase. These requirements may be revised as the design process continues.

Power resource budgets are shown in Table XXI. The allocations have been made at the subsystem level and are based on Spacecraft Bus power allocations found in the April 1993 release of the Contract End Item Specification, PS20005396. For the rationale used in deriving subsystem allocations, refer to Appendix A.

Table XVII. Resources Provided to the Instruments in Each Spacecraft Operating Mode

Spacecraft Mode	Instrument Status	Resources Provided to Instruments
Ground Test Mode	• Only survival equipment is powered ON • Survival heaters enabled • Configured as for survival mode	• Ground monitors instrument health and safety telemetry via T-0 umbilical or Launch Vehicle communications link • All instrument interfaces maintained within no operating temperature limits
Launch/Ascent Mode	• Only survival equipment is powered ON • Survival heaters enabled • Configured as for survival mode	• Ground monitors instrument health and safety telemetry via Launch Vehicle communications link • All instrument interfaces maintained within no operating temperature limits
Standby Mode	• Only survival equipment during OAI Phase; otherwise, full power levels • Configured as for survival mode during OAI; otherwise configured as for operational mode • Survival heaters enabled	• Instrument health and safety telemetry relayed to ground; TMON monitors Instrument telemetry as specified in the C&DH ICD • All instrument interfaces maintained within operating temperature limits
Science Mode	• Powered ON • Configured as for operational mode • Survival heaters enabled	• Instrument health and safety telemetry relayed to ground; TMON monitors Instrument telemetry as specified in the C&DH ICD • Science data handling capability will be provided • All instrument interfaces maintained within operating temperature limits
Survival Mode	• Only survival equipment is powered ON • Survival heaters enabled • Configured to withstand incident energy due to non-nominal Spacecraft attitude	• Affirmative "goto Survival Mode" command will be sent to instruments to signal entrance to Survival Mode • Instrument health and safety telemetry relayed to ground; TMON monitors Instrument telemetry as specified in the C&DH ICD • All instrument interfaces maintained within non-operating temperature limits

Table XVII. Resources Provided to the Instruments in Each Spacecraft Operating Mode (cont'd)

Spacecraft Mode	Instrument Status	Resources Provided to Instruments
Delta–V Mode Level 0	• Only survival equipment is powered ON • Survival heaters enabled • Configured to withstand incident energy due to non–nominal Spacecraft attitude	• Affirmative "goto Survival Mode" command may be sent to instruments to enter Delta–V level 0 mode • Instrument health and safety telemetry relayed to ground; TMON monitors Instrument telemetry as specified in the C&DH ICD • All instrument interfaces maintained within non–operating temperature limits
Level 1	• Full power levels • Survival heaters enabled • May be configured for either operational or survival mode	• Instrument health and safety telemetry relayed to ground; TMON monitors Instrument telemetry as specified in the C&DH ICD • All instrument interfaces maintained within operating temperature limits
Level 2	• Full power levels • Configured as for operational mode • Survival heaters enabled	• Instrument health and safety telemetry relayed to ground; TMON monitors Instrument telemetry as specified in the C&DH ICD • Science data handling capability will be provided • All instrument interfaces maintained within operating temperature limits
Safe Mode I. SCC Failure (Levels 0, 1, 2, & 3)	• Configured to survive sudden loss of power; it may be the case that only survival equip is powered[1] • Survival heaters enabled • Configured to withstand incident energy due to non–nominal Spacecraft attitude	• All instrument interfaces maintained within non–operating temperature limits • Affirmative "goto Safe Mode" command sent to instruments on entrance to this mode. • SCC "I'm OK" signal ceases.

[1] When the Spacecraft enters Safe Mode, the Instrument's power switches remain in the same position as in the previous mode. When the SCC is failed, no autonomous load shedding can occur.

Table XVII. Resources Provided to the Instruments in Each Spacecraft Operating Mode (cont'd)

Spacecraft Mode	Instrument Status	Resources Provided to Instruments
Safe Mode (continued) II. GN&C FDIR Triggers Earth Pointing Safe Mode (Levels 5 and 7)	• Configured to survive sudden loss of power; it may be the case that only survival equip is powered[2] • Survival heaters enabled • Configured to withstand incident energy in non-nominal S/C attitude	• All instrument interfaces maintained within non-operating temperature limits • Affirmative "goto Safe Mode" command sent to instruments on entrance to this mode • SCC "I'm OK" signal continues to be sent.
(Level 8)	• May be configured for either safe mode or operational mode • Full Power levels [2] • Survival heaters enabled	• Full power resources are available to the Instruments • Affirmative "goto Safe Mode" command sent to instruments on entrance to this mode. Ground commands may be sent to transition the Instrument back to operational mode. • SCC "I'm OK" signal will continue to be sent. • Low fidelity pointing control is maintained. • Science data handling capability will be provided • All instrument interfaces maintained within operating temperature limits
III. GN&C FDIR Triggers Sun Pointing Safe Mode (Levels 4 & 6)	• Configured to survive sudden loss of power; it may be the case that only survival equip is powered[2] • Survival heaters enabled • Configured to withstand incident energy in non-nominal S/C attitude	• All instrument interfaces maintained within non-operating temperature limits • Affirmative "goto Safe Mode" command sent to instruments on entrance to this mode • SCC "I'm OK" signal continues to be sent.

[2] When the Spacecraft enters Safe Mode, the Instrument's power switches remain in the same position as in the previous mode. In levels of Safe Mode in which the SCC remains operational, autonomous load shedding may occur as required.

Table XVIII. System Modes, Resources, Entry Conditions, and Services

Mode	State Variables					Sub-Mode	Entry Notification	Services
	Load Shed	Comp	Delta-V	Attitude	Science Data			
Ground Test	Yes	SCC	NO	N/A	NO	N/A	Normal Ground command	Verify readiness for launch. Power supplied through T-0 umbilical. Communication through hardline link.
Launch /Ascent	Yes	SCC	NO	N/A	NO	N/A	Normal Ground command	Complete early mission activities (earth acquisition, S/A deployment, HGA deployment, and S-band communication link acquisition)
Science	No	SCC	NO	EARTH	YES	N/A	Normal Ground command	All requirements
Standby	No	SCC	NO	EARTH	NO	N/A	Normal Ground command	All requirements, but no science data Xmission
Survival	Yes	SCC	NO	EARTH	NO	N/A	Survival Mode RTS Sequence	Survival level power only
Safe	Yes	ACE	NO	SUN	NO	0	Ground Command	Survival power levels, sun pointing
Safe	Yes	ACE	NO	EARTH	NO	1	Lack of I'm Ok heartbeat	Survival power levels, low precision earth ptg.
Safe	No	ACE	NO	SUN	NO	2	Ground Command	Full power, sun pointing
Safe	No	ACE	NO	EARTH	NO	3	Lack of I'm Ok heartbeat	Full power, low precision earth pointing
Safe	Yes	ACE/ SCC	NO	SUN	NO	4	RTS (Sun pointing) and Safe Mode Command	Survival power levels, sun pointing, SCC operating but ACE controls attitude
Safe	Yes	ACE/ SCC	NO	EARTH	NO	5	RTS (Earth pointing) and Safe Mode Command	Survival power levels, low precision earth pointing, SCC operating but ACE controls attitude
Safe	No	ACE/ SCC	NO	SUN	NO	6	RTS (Sun pointing) and Safe Mode Command	Full power available, sun pointing, SCC operating but ACE controls attitude
Safe	No	ACE/ SCC	NO	EARTH	NO	7	RTS (Earth pointing) and Safe Mode Command	Full power available, low precision earth pointing, SCC operating but ACE controls attitude
Safe	No	ACE /SCC	NO	EARTH	YES	8	RTS (Earth pointing) and Safe Mode Command	Full power available, low precision earth pointing, SCC operating but ACE controls attitude, may continue to take science data
Delta-V	Yes	SCC	YES	EARTH	NO	0	Normal Ground command	Survival power levels, low precision earth ptg.
Delta-V	No	SCC	YES	EARTH	NO	1	Normal Ground command	Full Power available, low precision earth pointing
Delta-V	No	SCC	YES	EARTH	YES	2	Normal Ground command	Full Power available, low precision earth pointing, continue to take science data

Table XIX. EOS-AM Key Performance Requirements

	Ground Test Mode	Launch/ Ascent Mode	Standby Mode	Delta-V Mode		Science Mode		Survival Mode	Safe Mode	
				level 2	level 0	BOL	EOL		Earth-Pointing level 8	Sun-Pointing level 0
Power Generation (Average)	TBD[1]	TBD	2666 W	2817 W	TBD	2650 W	2529 W	TBD	2650 W	TBD
Data Storage	384 Mbits	384 Mbits	384 Mbits	140 Gbits	384 Mbits	140 Gbits	140 Gbits	384 Mbits	140 Gbits	384 Mbits
Science Data Throughput	N/A	N/A	N/A	150 Mbps	N/A	150 Mbps	150 Mbps	N/A	150 Mbps	N/A
C&DH Data Processing Capability	Yes	Yes	N/A	Yes	Yes	Yes	Yes	Yes	Yes	Yes
Pointing Accuracy at Instrument Interface	N/A	N/A	N/A	TBD	N/A	150 arc-sec zero-to-peak, 3σ	150 arc-sec zero-to-peak, 3σ	N/A	TBD	N/A
Pointing Knowledge at Instrument Interface	N/A	N/A	N/A	TBD	N/A	90 arc-sec zero-to-peak, 3σ	90 arc-sec zero-to-peak, 3σ	N/A	TBD	N/A
HGA Pointing Error	N/A	N/A	0.4 deg, 3σ/axis	0.4 deg, 3σ/axis	N/A	0.4 deg, 3σ/axis	0.4 deg, 3σ/axis	N/A	0.4 deg, 3σ/axis	N/A
CPHTS Heat Rejection	N/A	N/A	Yes	Yes	N/A	Yes	Yes	N/A	Yes	N/A

[1] – Power supplied by T-0 umbilical

N/A – Not applicable to operating mode

Table XX. Communications Link Utilization (Minimum Capability)

	Ground Test Mode	Launch/ Ascent Mode	Standby Mode	Delta-V Mode		Science Mode		Survival Mode	Safe Mode	
				level 2	level 0	BOL	EOL		Earth-Pointing level 8	Sun-Pointing level 0
TONS	N/A	N/A	NR	NR	NR	Yes	Yes	NR	NR	NR
TDRSS Forward										
SSA	N/A	N/A	125 bps	10 Kbps	125 bps	10 Kbps	10 Kbps	125 bps	10 Kbps	125 bps
SMA	N/A	N/A	NR	1 Kbps	NR	1 Kbps	1 Kbps	N/A	1 Kbps	NR
TDRSS Return										
SSA	N/A	N/A	1 Kbps[2]	272 Kbps	1 Kbps[2]	272 Kbps	272 Kbps	1 Kbps[2]	272 Kbps	1 Kbps[2]
SMA	N/A	N/A	NR	16 Kbps[2]	N/A	16 Kbps[2]	16 Kbps[2]	N/A	16 Kbps[2]	NR
KSA	N/A	N/A	NR	150 Mbps	N/A	150 Mbps	150 Mbps	N/A	150 Mbps	NR
GN (S-band)										
Forward	N/A	2 Kbps	2 Kbps	2 Kbps	2 Kbps	2 Kbps	2 Kbps	2 Kbps	2 Kbps	2 Kbps
Return	N/A	528 Kbps	528 Kbps	528 Kbps	528 Kbps	528 Kbps	528 Kbps	528 Kbps	528 Kbps	528 Kbps
HARDLINE (to GSE)										
Forward	2 Kbps	N/A	N/A	N/A	N/A	N/A	N/A	N/A	N/A	N/A
Return	16 Kbps	N/A	N/A	N/A	N/A	N/A	N/A	N/A	N/A	N/A
HARDLINE (to LV)										
Forward	N/A	N/A	N/A	N/A	N/A	N/A	N/A	N/A	N/A	N/A
Return	N/A	1 Kbps	N/A	N/A	N/A	N/A	N/A	N/A	N/A	N/A
Direct Access System (X-band)										
Direct Broadcast	N/A	N/A	N/A	15 Mbps	N/A	15 Mbps	15 Mbps	N/A	15 Mbps	N/A
DB/DDL	N/A	N/A	N/A	105 Mbps	N/A	105 Mbps	105 Mbps	N/A	105 Mbps	N/A
Direct Playback	N/A	N/A	N/A	150 Mbps	N/A	150 Mbps	150 Mbps	N/A	150 Mbps	N/A

[1] - Power supplied by T-0 umbilical

[2] - Only the Q channel is required.

N/A - Not applicable to operating mode; NR - Not required as minimum capability for mode, but may be available at higher levels of functionality within the mode

Table XXI. Power Resource Allocation [Watts][1]

Subsystem	Ground Test Mode[1]	Launch/ Ascent Mode[1]	Standby Mode[1]	Delta-V Mode[1]		Science Mode[2]		Survival Mode[2]	Safe Mode[2]	
				level 2 (max)	level 0 (min)	BOL	EOL		Earth-Pointing lev 8 (max)	Sun-Pointing lev 0 (min)
GN&CS	179	220	220	220	220	220	220	176	220	176
C&DHS	211	211	373	360	211	360	360	211	360	211
TCS[3]	56(TBR)	56(TBR)	296(TBR)	296(TBR)	780(TBR)	296(TBR)	150(TBR)	780(TBR)	296(TBR)	800(TBR)
EPS	180	190	190	190	190	190	190	190	190	180
COMM	94	174	340	340	174	340	340	174	340	174
PROPS[4]	37	37	5	168	168	5	5	5	5	5
SMS	0	0	0	0	0	0	0	0	0	0
EAS[5]	5	5	5	5	5	5	5	5	5	5
Unallocated Reserve	N/A	N/A	N/A	N/A	N/A	N/A	65	N/A	N/A	N/A
Total Housekeeping Bus	762	893	1429	1579	1748	1416	1335	1541	1416	1551
Instruments	TBD	TBD	1195	1195	TBD	1195	1195	TBD	1195	TBD
Total Spacecraft	TBD	TBD	2624	2774	TBD	2611	2530	TBD	2611	TBD
Requirement	N/A	N/A	N/A	N/A	N/A	N/A	2530	N/A	N/A	N/A
Margin	N/A	N/A	N/A	N/A	N/A	N/A	0	N/A	N/A	N/A

(1) These allocations are the maximum allowable average power consumptions to satisfy subsystem performance requirements for each operating mode.

(2) These allocations are the maximum allowable one oerbit average power consumptions to satisfy subsystem performance requirements for each operating mode.

(3) The power allocation for the Thermal Control Subsystem includes an allocation for orbit average heater power at Spacecraft dynamic steady state. Except for the EOL Science mode, all TCS power allocations are based on BOL conditions. These power allocations include power to operate instrument thermal accommodation equipment which is supplied by the Spacecraft Provider.

(4) The PROPs allocations are for propulsion subsystem components only. The HCEs, EPC, BDU, and FDB in the propulsion module are attributed to other subsystems.

(5) The EAS power allocation is for the power required to convert the 120 V primary power to 28 V power. This table of power allocations is meant to specify the Spacecraft load which must be supplied by the EPS. Power distribution harness losses are considered to be an inefficiency of the power and electrical accommodation subsystems rather than a power load.

Appendix A.

This Appendix documents the current rationale for the power budget in Table XXI. Component dissipations are based on the values listed in EOS–DN–RES–025, Rev. O.

EOS-SE&I-563 Rev A

To: E. Kohl **Mail Stop:** **Date:** 31 March 1993

From: H. Bond **Mail Stop:** NP-2G **Phone:** x-7045

Subject: Rationale for Power Allocations in 4/93 Update to CEI – Revision A

This memo documents the assumptions on which the updated version of the power allocations table in the CEI (Table IX) is based.

REVISIONS

The following changes were made to this table since the initial release of this memo:

EAS

The EAS power allocation increased from 1 W to 2 W, because current estimates of losses incurred when primary 120 V power is converted to 28 V are about 1.6 W, including the class 3 contingency of 10%. The power distribution harness voltage drop is not included in the table of power allocations because it is considered an inefficiency of the electrical power sybsystem (EPS), not a user load. The EAS Performance Specification states that the power distribution harness between the PDU and the load has a maximum loss of 2.0%.

COMM

The power of the S-band transponders has not changed, but the notation on what equipment is operating equipment has been changed to indicate both units continuously receiving in every mode.

Because COMM operation during standby mode is substantially different in the orbit acquisition initialization phase than in other phases, maximum and minimum power levels are described. Only the maximum level is listed in the allocation table for this mode.

C&DH

Standby mode power allocation was increased to allow for the possibility that both SCC's may be turned on during subsystem checkout. (Only one unit would be controlling Spacecraft functions.)

PROPS

The PMEA is operational at half of nominal power during the ground test and launch/ascent modes.

Distribution:

S. Carey	D. Chalmers	J. Lombardo
T. Millbourne	N. Nasser	L. Ratteni
M. Roza	C. Scott	EOS file

ISSUES

The TCS power allocations are based on PDR estimates of heater power consumption and HCE power plus a 10% contingency. These values are listed as TBR because the equipment modules (EMs) are going to change considerably from the designs analyzed for the thermal PDR due to numerous changes to the EPS, C&DH, and other subsystems.

Instrument power allocations for ground test, launch/ascent, delta–v, survival, and safe modes have also been left as TBD in the table. In these modes, instrument power consumption will primarily consist of heater power to maintain survival temperatures. Current estimates of instrument heater power have a high degree of uncertainty because they are based on instrument models from the Instrument Providers which do not agree very well with the latest configurations shown in the UIIDs. The instrument power allocations in every mode will eventually be controlled via the UIIDs, but current versions list values for most modes except science as TBD.

ASSUMPTIONS

The following assumptions are organized by Spacecraft mode. Unless specifically stated, assume that all components within a subsystem are operational except those listed as being off. The EAS allocation is constant at 2 W, and the SMS has no allocated power. All allocations are based on current estimates with contingency added according to component accuracy class.

GROUND TEST MODE

GN&C:
- All equipment on. RWAs are at low power (6 W each) for caging during launch.
- Redundant TAM is in cold standby.

C&DH: (Corresponds to the survival mode as specified in PS20008567)
- SSR has only one control unit operational, and no memory units are powered. (C&DH is not required to record data during ground test mode, but power is allocated in the event that the SSR is turned on in this mode in preparation for launch.)
- SFE is non–operational.
- Redundant SCC is in cold standby.

EPS:
- SAD and ADE are non–operational.

COMM:
- HGA is stowed with survival heaters enabled. (Assume no heater power required.)
- DAS is non–operational.
- S–band transponders: 1 continuous transmit, 2 continuous receive
- KSA modulator is non–operational

PROPS:
- PMEA is operational at 50% duty cycle.
- Six 1–lb Cat Bed Heaters are operational.

- Pressure Transducer is on.
- All other PROP equipment is non–operational.

LAUNCH/ASCENT MODE

GN&C:
- All equipment on. RWAs are at nominal power (19 W each).
- Redundant TAM is in cold standby.

C&DH: (Corresponds to the survival mode as specified in PS20008567)
- SSR has only one data control unit operational, and no memory units are powered. (The DCU is specified to have a minimum storage capability of 384 Mbytes, which is sufficient for storing up to four orbits worth of Spacecraft housekeeping data. Therefore, the data memory units need not be operational during launch/ascent.)
- SFE is non–operational.
- Redundant SCC is in cold standby.

EPS:
- All equipment on.

COMM:
- HGA is non–operational with survival heaters enabled. (Assume 80 W.)
- DAS is non–operational.
- S–band transponders: 1 continuous transmit, 2 continuous receive
- KSA modulator is non–operational

PROPS:
- PMEA is operational at 50% duty cycle.
- Six 1–lb Cat Bed Heaters are operational.
- Pressure Transducer is on.
- All other PROP equipment is non–operational.

STANDBY MODE

GN&C:
- Redundant TAM is in cold standby.
- All other equipment on.

C&DH: (Corresponds to the standby mode as specified in PS20008567.)
- All equipment on.
- Both primary and redundant SCCs are powered ON for checkout, although only one unit is controlling Spacecraft functions.

EPS:
- All equipment on.

COMM: MAXIMUM (mission orbit)
- DAS: 100% duty cycle (During checkout of the direct access system, fill data will

be used.)
- HGA: 30% transmit duty cycle
- S–band transponders: 1 unit has 30% transmit duty cycle, 2 units continuous receive
- KSA: 1 unit 30% duty cycle, 1 unit cold standby

MINIMUM (transfer orbit, during orbit acquisition initialization phase)
- DAS: powered OFF
- HGA: Antenna is continuously tracking, and the embedded controller and gimbal drives are the only operational components.
- S–band transponders: 1 unit has 30% transmit duty cycle, 2 units continuous receive
- KSA: 1 unit warm standby, 1 unit cold standby

PROPS: – Pressure Transducer is on, but all other PROP equipment is non–operational.

DELTA–V MODE

MAX

GN&C:
- Redundant TAM is in cold standby.
- All other equipment on.

C&DH: (Corresponds to the science mode as specified in PS20008567)
- All equipment on.
- Redundant SCC is in cold standby.

EPS: – All equipment on.

COMM:
- 30% HGA transmit duty cycle.
- S–band transponders: 1 unit 30% transmit, 2 units continuous receive
- KSA: 1 unit 30% transmit duty cycle; 1 unit cold standby
- DAS: 100% duty cycle

PROPS:
- Assumes PM Inclination Correction Mode (the mode with the greatest power consumption).
- Pressure Transducer is on.
- PMEA is on.
- Four 1–lb REAs are firing at different duty cycles.
- Four 5–lb REAs are firing at 100% duty cycles.
- Four 1–lb Cat Bed Heaters are enabled with different duty cycles.

MIN

GN&C:
- Redundant TAM is in cold standby.
- All other equipment on.

C&DH: (Corresponds to the survival mode as specified in PS20008567)
- SSR has only one control unit and no memory units powered.
- SFE is non–operational.
- Redundant SCC is in cold standby.

EPS:
- All equipment on.

COMM:
- HGA is in survival mode. (Assume 80 W.)
- DAS is non–operational.
- KSA is non–operational
- S–band transponders: 1 unit continuous transmit, 2 units continuous receive

PROPS:
- Assumes PM Inclination Correction Mode (the mode with the greatest power consumption).
- Pressure Transducer is on.
- PMEA is on.
- Four 1–lb REAs are firing at different duty cycles.
- Four 5–lb REAs are firing at 100% duty cycles.
- Four 1–lb Cat Bed Heaters are enabled with different duty cycles.

SCIENCE MODE

GN&C:
- Redundant TAM is in cold standby.
- All other equipment on.

C&DH: (Corresponds to the science mode as specified in PS20008567)
- All equipment on.
- Redundant SCC is in cold standby.

EPS:
- All equipment on.

COMM:
- 30% HGA transmit duty cycle.
- S–band transponders: 1 unit 30% transmit, 2 units continuous receive
- KSA: 1 unit 30% transmit duty cycle; 1 unit cold standby
- DAS: 100% duty cycle

PROPS:
- Pressure Transducer is on, but all other PROP equipment is non–operational.

SURVIVAL MODE

GN&C:
- SSSTs are powered OFF.
- Redundant TAM is in cold standby.

C&DH: (Corresponds to the survival mode as specified in PS20008567)
- SSR has only one control unit and no memory units powered.
- SFE is non–operational.
- Redundant SCC is in cold standby.

EPS:
- All equipment on.

COMM:
- HGA is parked in earth–pointing safe mode orientation. (Assume 80 W.)
- DAS is non–operational.
- KSA is non–operational.
- S–band transponders: 1 continuous transmit, 2 continuous receive

PROPS:
- Pressure Transducer is on, but all other PROP equipment is non–operational.

SAFE MODE

MAX (sublevel 8)

GN&C:
- Redundant TAM is in cold standby.
- All other equipment on.

C&DH: (Corresponds to the science mode as specified in PS20008567)
- All equipment on.
- Redundant SCC is in cold standby.

EPS:
- All equipment on.

COMM:
- 30% HGA transmit duty cycle.
- S–band transponders: 1 unit 30% transmit, 2 units continuous receive
- KSA: 1 unit 30% transmit duty cycle; 1 unit cold standby
- DAS: 100% duty cycle

PROPS:
- Pressure Transducer is on, but all other PROP equipment is non–operational.

MIN (sublevel 0)

GN&C:
- SSSTs are powered OFF.
- Redundant TAM is in cold standby.

C&DH: (Corresponds to the survival mode as specified in PS20008567)
- SSR has only one control unit and no memory units powered.
- SFE is non–operational.
- Redundant SCC is in cold standby.

EPS: – SAD and ADE are non–operational.

COMM:
- HGA is parked in sun–pointing safe mode orientation. (Assume 80 W.)
- DAS is non–operational.
- KSA is non–operational.
- S–band transponders: 1 continuous transmit, 2 continuous receive

PROPS: – Pressure Transducer is on, but all other PROP equipment is non–operational.

PS20008567
CAGE No. 49671
28 June 1993

Performance Specification
Command and Data Handling Subsystem
for EOS–AM Spacecraft
(SP–301)

Prepared under:
Contract NAS5–32500
NASA Goddard Space Flight Center
Greenbelt, Maryland 20771

Prepared by:
Martin Marietta Corporation
Astro Space
P.O. Box 800
Princeton, New Jersey 08543–0800

DCC062693

(This page intentionally left blank.)

REVISION LOG

This log identifies those portions of this document which have been revised since the original issue. Revised portions of each page, for the current revision only, are identified by marginal striping.

Revision	Paragraph Number(s) Affected	Rev. Date	Approval
Initial Issue		06/28/93	CM/GSR

(This page intentionally left blank.)

TABLE OF CONTENTS

SECTION / PARAGRAPH	TITLE	PAGE
1	INTRODUCTION	1
1.1	Scope	1
2	APPLICABLE DOCUMENTS	3
2.1	Government Documents	3
2.1.1	NASA Documents	3
2.1.2	Military Documents	4
2.1.3	Other Government Documents	4
2.2	Non–Government Documents	4
2.2.1	Martin Marietta Astro Space Documents	4
2.2.2	Subcontractor Documents	5
2.2.3	Other Non–government Documents	5
3	REQUIREMENTS	7
3.1	Command and Data Handling Subsystem (C&DHS) Definition	7
3.1.1	C&DHS Glossary	7
3.1.2	C&DHS Functions	9
3.1.3	C&DHS Diagrams	10
3.1.4	C&DHS Description	10
3.1.4.1	C&DHS Components	10
3.1.4.2	Command Data Processing	13
3.1.4.3	Telemetry Data: Sampling, Gathering, Formatting, and Distribution	14
3.1.4.4	C&DHS Autonomous Functions	15
3.1.4.5	Ancillary Data	15
3.1.4.6	SCC OK Message	15
3.1.4.7	C&DHS Safe Mode Commanding	15
3.1.4.8	Time and Synchronization Services	15
3.1.4.9	Bus Utilization Table	16
3.1.4.10	Science Data Handling	16
3.1.5	Interface Definition	17

TABLE OF CONTENTS (Continued)

SECTION / PARAGRAPH	TITLE	PAGE
3.1.5.1	Functional Interfaces	17
3.1.5.2	Physical Interfaces	24
3.1.6	Major Component List	25
3.2	Command and Data Handling Subsystem Characteristics	25
3.2.1	Performance	25
3.2.1.1	Command Reception and Distribution	25
3.2.1.2	Telemetry Data: Sampling, Gathering , Formatting and Distribution	29
3.2.1.3	Ancillary Data	37
3.2.1.4	Interfaces	37
3.2.1.5	H/K Telemetry Storage on the SSR	53
3.2.1.6	Bus Utilization	54
3.2.1.7	Computing Resources	59
3.2.1.8	Time Distribution and Synchronization Services	60
3.2.1.9	Science Data Handling	63
3.2.1.10	GN&CS Safe Mode Support	69
3.2.1.11	Failure Tolerance	69
3.2.1.12	Serviceability	70
3.2.1.13	Growth	70
3.2.1.14	Orbit–Averaged Power	70
3.2.2	C&DHS Operational Modes	70
3.2.3	CTIU Services Available in Any C&DHS Operational Mode	72
3.2.3.1	C&DHS Ground Test Mode	73
3.2.3.2	C&DHS Survival Mode	73
3.2.3.3	C&DHS Standby Operational Mode	74
3.2.3.4	C&DHS Science Operational Mode	74
3.2.3.5	C&DHS Initialization	75
3.2.4	Physical Characteristics	75
3.2.4.1	Mass	75
3.2.4.2	Durability	75
3.2.4.3	Maintainability Impact on Design	75

TABLE OF CONTENTS (Continued)

SECTION / PARAGRAPH	TITLE	PAGE
3.2.5	Power Characteristics	76
3.2.6	Reliability	76
3.2.6.1	Storage Restrictions	76
3.2.6.2	Failure Propagation Restrictions	76
3.2.6.3	Redundancy Management	76
3.2.7	Environmental Conditions	76
3.2.7.1	Storage, Integration and Test	77
3.2.7.2	Shipment	77
3.2.7.3	Launch	77
3.2.7.4	Critical Pressure Operation	77
3.2.7.5	On–orbit	77
3.2.7.6	Electromagnetic Radiation	78
3.3	Design and Construction	78
3.3.1	Material, Processes, Parts, and Finishes	78
3.3.2	Nameplates and Product Marking	78
3.3.3	Workmanship	78
3.3.4	Interchangeability	78
3.3.5	Safety	78
3.3.6	Electrical Connector Design	79
3.3.6.1	Attachment of Connectors	79
3.4	Documentation	79
3.4.1	Software Documentation	79
3.5	Logistics	79
3.5.1	Maintenance	79
3.5.2	Supply	79
3.6	Precedence	79
3.6.1	Precedence of Design Criteria	79
3.6.2	Documentation Precedence	80
3.7	Major Component Characteristics	80
3.7.1	General Component Characteristics	80

TABLE OF CONTENTS (Continued)

SECTION / PARAGRAPH	TITLE	PAGE
3.7.1.1	Mass, Input Power and Reliability Allocations	80
3.7.1.2	Documents	81
3.7.2	SCC	81
3.7.2.1	General Requirements	81
3.7.2.2	Memory Requirements	85
3.7.2.3	Commandability	85
3.7.2.4	Size	85
3.7.2.5	Interfaces	85
3.7.3	CTIU	86
3.7.3.1	Performance	86
3.7.3.2	Computing Resources	97
3.7.3.3	Interfaces	99
3.7.4	Bus Data Unit (BDU)	100
3.7.4.1	General Requirements	100
3.7.4.2	BDU Sub–Minor Cycle Task Processing	100
3.7.4.3	Commandability	100
3.7.4.4	Testing	101
3.7.4.5	BDU Environment and I/O Quantities	101
3.7.4.6	Functional Requirements	101
3.7.4.7	Timing Fault	105
3.7.4.8	Passive Telemetry Sampling	105
3.7.4.9	Size	105
3.7.4.10	Interfaces	105
3.7.5	Science Formatting Equipment (SFE)	106
3.7.5.1	General Requirements	106
3.7.5.2	Telemetry	107
3.7.5.3	Testing	107
3.7.5.4	Size	108
3.7.5.5	Interfaces	108
3.7.6	Solid State Recorder (SSR)	109

TABLE OF CONTENTS (Continued)

SECTION / PARAGRAPH	TITLE	PAGE
3.7.6.1	General Requirements	109
3.7.6.2	Commandability	109
3.7.6.3	Telemetry	109
3.7.6.4	FDIR	109
3.7.6.5	Bit Error Rate	109
3.7.6.6	Functional Requirements	109
3.7.6.7	Size	110
3.7.6.8	Interface	110
3.7.7	Flight Software System (FSWS)	111
3.7.7.1	SCC–Based FSWS	111
3.7.7.2	FDIR	112
3.7.7.3	High Speed Serial I/O Interfaces	112
3.7.7.4	SCC's C&T Bus Embedded RT	115
3.7.7.5	CTIU Firmware	116
4	QUALITY ASSURANCE PROVISIONS	119
4.1	Command and Data Handling Subsystem Verification	119
4.1.1	Verification Phases	119
4.1.2	Verification Methods	119
4.2	Testing	119
4.2.1	Reliability Testing	119
4.2.2	Engineering Evaluation and Test Requirements	119
4.2.3	Acceptance testing	120
4.2.4	Qualification testing	120
4.2.5	Protoflight Testing	120
4.2.6	Installation testing and checkout	120
4.2.7	Test Equipment Verification	120
4.2.8	Verification Conditions	120
4.3	Verification Documentation	120
4.3.1	Responsibility for Verification	120

TABLE OF CONTENTS (Continued)

SECTION / PARAGRAPH	TITLE	PAGE
5	PREPARATION FOR DELIVERY	121
6	NOTES	123
6.1	Definitions	123
6.2	Acronyms and Abbreviations	123
6.3	Exceptions to the GIS and GSFC 420–03–02	127
6.4	Requirements Traceability Matrix	127
	APPENDIX I	
10	COMMAND REQUIREMENTS	129
10.1	SCC Commands	129
10.1.1	Hardware Commands to SCC	129
10.2	CTIU Commands	129
10.2.1	CTIU to CTIU	129
10.2.2	Spacecraft	130
10.2.3	Instrument	131
10.3	BDU Commands	131
10.4	SFE Commands	131
10.5	SSR Commands	134
	APPENDIX II	
20	TELEMETRY REQUIREMENTS	135
20.1	SCC Telemetry:	135
20.2	CTIU Telemetry	135
20.3	BDU Telemetry	136
20.4	SFE Telemetry	136
20.5	SSR Telemetry	137
	APPENDIX III	
30	REQUIREMENTS CROSS REFERENCE	139

LIST OF FIGURES

FIGURE	TITLE	PAGE
1	Command and Data Handling Subsystem Block Diagram	11
2	C&DHS Functional Interfaces	18
3	C&DHS Functional C&T Interfaces with Spacecraft Equipment (BDU)	20
4	C&DHS Functional C&T Interfaces with Spacecraft Instrument for an Embedded Remote Terminal	20
5	C&DHS Functional Interfaces with Spacecraft Subsystem with Embedded Remote Terminal	21
6	C&DHS Functional Interface with COMS	21
7	C&DHS Functional Interfaces with SCC–based FSWS	23
8	Time–line for Delivery of SCC–based FSWS Command Data Transfers	28
9	Relationship Between Gathering, Formatting and Transmission at 16 Kbps	31
10	Relationship Between Gathering, Formatting and Transmission at 1 Kbps	31
11	Data Gathered and Virtual Channel Assignment	35
12	S–Band Transponder to C&DHS Interfaces	38
13	CLTU Timing For Input From S–Band Transponder	39
14	Downlink Interfaces	41
15	Umbilical Output Timing	43
16	Serial I/O Interfaces between SCC and CTIU	43
17	High Speed Serial (HSS) Data Interface Diagram	44
18	High–Speed Serial Interface Timing	45
19	SCC OK Message and SCC OK Signal	47
20	Standard Command and Telemetry 1553B Interface Circuit	49
21	SSR Record Interface Signals	51
22	SSR Playback Interface Signals	51
23	Modulator Interface Signals	53
24	Command and Telemetry Bus Cycles	55
25	Top–Level C&DH Science Data Handling Architecture Block Diagram	64

LIST OF FIGURES (Continued)

FIGURE	TITLE	PAGE
26	C&DHS Operational Mode Changes	71
27	CTIU Input Ports with S–Band Transponders	87
28	Minor Cycle Timing	99
29	BDU Sub–Minor Cycle Task Processing	101
30	Minor Cycle Synchronization	103
31	Minor Cycle Drift Over 32 Minor Cycles	103
32	Telemetry Processing Time	104

LIST OF TABLES

TABLE	TITLE	PAGE
I	Functional Interfaces	18
II	Major Components	25
III	Return (Telemetry) Links	30
IV	S–Band Transponder	42
V	High–Speed Serial Interface Modes	44
VI	MIL–STD–1553B Mode Code Utilization	48
VII	Minor Cycle Tasks and Frequency of Occurrence	56
VIII	C&T RT Subaddress Assignments	57
IX	BDU Telemetry Control Word	57
X	LRS Science Bus Address Assignment	66
XI	Science Data Links	68
XII	Orbit Average Power	71
XIII	Subsystem Operational Modes vs Spacecraft Operational Modes	72
XIV	Subsystem Operational Modes vs C&DH Component Power State	72
XV	C&DHS Allocations	81
XVI	Functionality of SCC's Operational States	82
XVII	Forward Link Service Interface	87
XVIII	Uplink Command Data Transfer (CLTU) Processing	88
XIX	Command Distribution	88
XX	CTIU C&T RT Subaddresses	89
XXI	CTIU Command Execution	90
XXII	Verification of Electronic Interfaces	90
XXIII	Data Sampling	96
XXV	Data Gathering	97
XXVI	Data Distribution	97
XXVII	BDU Environments and I/O Quantities	102
XXVIII	BDU Output Table	105
XXIX	CTIU Relay Commands	129
XXX	Spacecraft Relay Commands	130
XXXI	Instrument Relay Commands	131

LIST OF TABLES (Continued)

TABLE	TITLE	PAGE
XXXII	CTIU Internal Commands	131
XXXIII	SCC Telemetry Interfaces	135
XXXIV	CTIU Telemetry	135

TBD LOG

ITEM	SECTION	PAGE	SUBJECT	RESP.	DUE
TBD–1	2.1.1	3	MISR UIID (not signed)	GSFC	
TBD–2	2.1.1	3	MOPIT UIID (not signed)	GSFC	
TBD–3	3.2.1.4.4	45	High Speed Serial I/O Timing	C&DHS	CTCA RIO +1 month

TBR LOG

ITEM	SECTION	PAGE	SUBJECT	RESP.	DUE
TBR–1	3.2.1.1.3.1	27	Restriction on relay drive command timing	C&DHS	S/C PDR
TBR–2	3.2.5	76	Operational voltage range	SE&I	S/C PDR
TBR–3	3.2.6	76	P_s mission life	SE&I	S/C PDR
TBR–4	Table XV	81	Component reliability	C&DHS	C&DH CDR
TBR–5	Table XXVII	102	BDU Configurations	C&DHS	S/C PDR + 2 months
TBR–6	3.7.4.6.1.1	102	BDU Synchronization accuracy	C&DHS	BDU CDR
TBR–7	3.7.4.8	105	Passive telemetry	C&DHS	BDU PDR +5 months
TBR–8	10	129	Command requirements	C&DHS	C&DH CDR
TBR–9	20	135	Telemetry requirements	C&DHS	C&DH CDR

1 INTRODUCTION

1.1 Scope

This specification establishes the performance, design, development, and test requirements for the Command and Data Handling Subsystem (C&DHS) of the EOS–AM Spacecraft. These requirements are derived from the Contract End Item Specification (PS20005396) and the documents it cites.

(This page intentionally left blank.)

2 APPLICABLE DOCUMENTS

2.1 Government Documents

The following documents of the exact issue shown, form a part of this specification to the extent specified herein. In the event of conflict between the documents referenced below and the contents of this specification, the contents of this specification shall take precedent, except as defined in Section 3.6 herein.

2.1.1 NASA Documents

GSFC–421–10–01 30 October 1992	Requirements Document For EOS–AM Spacecraft
GSFC–420–05–02, Rev. B, Change #1 13 November 1992	Performance Assurance Requirements for the EOS Observatories
GSFC 420–03–02 01 December 1992	General Instrument Interface Specification for the Earth Observing System
GSFC–421–12–11–01 24 March 1993	Unique Instrument Interface Document for the Advanced Spaceborne Thermal Emission and Reflection Radiometer (ASTER)
GSFC–421–12–04–01 06 November 1992	Unique Instrument Interface Document for the Moderate–Resolution Imaging Spectrometer (MODIS)
GSFC–421–12–12–02 15 March 1993	Unique Instrument Interface Document for the Clouds and the Earth's Radiant Energy System (CERES)
GSFC–422–38–05 dated **(TBD–1)**	Unique Instrument Interface Document for the Multi–Angle Imaging Spectro–Radiometer (MISR)
GSFC–422–41–05 dated **(TBD–2)**	Unique Instrument Interface Document for the Measurement of Pollution in the Troposphere (MOPITT)
531–TR–001 October 1991	Users Spacecraft Clock Calibration System (USCCS) User's Guide
NHB 5300.4 (3A–1) December 1976	Requirements for Soldered Electrical Connections, Change 1
NHB 5300.4 (3G) April 1985	Requirements for Interconnecting Cables, Harnesses, and Wiring
NHB 5300.4 (3H) May 1984	Requirements for Crimping and Wire Wrap

NHB 5300.4 (3I) May 1984	Requirements for Printed Wiring Boards
NHB 5300.4 (3J) April 1985	Requirements for Conformal Coating and Staking of Printed Wiring Boards and Electronic Assemblies
NHB 5300.4 (3K) January 1986	Requirements for Rigid Printed Wiring Boards and Assemblies

2.1.2 Military Documents

MIL–STD–1553B	Military Standard, Aircraft Internal Time Division Command/Response Multiplex Data Bus
MIL–STD–1750A	Military Standard, Sixteen–Bit Computer Instruction Set Architecture
ANSI/MIL–STD–1815A 17 February 1983	Ada Programming Language
MIL–STD–490A 04 June 1985	Specification Practices
WSMCR–127–1 December 1989	Western Space and Missile Center Range Safety Regulations

2.1.3 Other Government Documents

None

2.2 Non–Government Documents

The following documents of the latest issue shown, form a part of this specification to the extent specified herein. In the event of conflict between the documents referenced herein and the contents of this specification, the contents of this specification shall be considered a superseding requirement, except as defined in Section 3.6 herein.

2.2.1 Martin Marietta Astro Space Documents

PS20005396	Contract End Item (CEI) Specification for the EOS–AM Spacecraft, (SEP–101)
IS20008501	General Interface Specification for the Earth Observing System, (ICD–101)
IS20008503	EOS–AM Spacecraft To Launch Vehicle ICD

PS20005404	Verification Specification for the Earth Observing System, (VRD–110)
IS20008658	Data Format Control Book, (ICD–106)
PN20005869	Electromagnetic Compatibility (EMC) Control Plan, (SEP–106)
20039967	Flight Software Subsystem Interface Requirements Document
20005397	Product Assurance Implementation Plan, (PA–100)
20008655	Software Management Plan, (MD–108)
20008536	EOS–AM Spacecraft Specification Tree
20008652	Critical Items List, (PA–510)
20008648	Program Approved Parts List (PA–325)
20008650	Program Approved Materials and Processes List (PA–460)
8030035	Workmanship Specification
20005404	Spacecraft Verification Plan (VRD–100)
PN20008664	Comprehensive Test Plan (VRD–105)
20043119	Ground Systems Requirements Database
Source:	Martin Marietta Astro Space P. O. Box 800 Princeton, NJ 08543–0800

2.2.2 Subcontractor Documents

None

2.2.3 Other Non–government Documents

EIA Std. RS–422	Electrical Characteristics of Balanced Voltage Digital Interface Circuits
CCSDS 701.00–B–1 June 1989	CCSDS Recommendation for Space Data System Standards. Advanced Orbiting Systems (AOS), Blue Book, Issue–1
CCSDS 201.0–B–1 January 1987	CCSDS Recommendation for Space Data System Standards. Telecommand, Part 1: Channel Service, Architectural Specification, Blue Book, Issue–1

CCSDS 202.0–B–1 January 1987	CCSDS Recommendation for Space Data System Standards. Telecommand, Part 2: Data Routing Service, Architectural Specification, Blue Book, Issue–1
CCSDS 203.0–B–1 January 1987	CCSDS Recommendation for Space Data System Standards. Telecommand, Part 3: Data Management Service, Architectural Specification, Blue Book, Issue–1
CCSDS 301.0–B–1 January 1987	CCSDS Recommendation for Space Data System Standards. Time Code Formats, Blue Book, Issue–1

3 REQUIREMENTS

3.1 Command and Data Handling Subsystem (C&DHS) Definition

3.1.1 C&DHS Glossary

The following terms are defined to facilitate specification of the C&DHS requirements and is intended to be consistent with higher level documentation:

Autonomous Function: A decision–making function which is independent of human intervention performed by hardware, firmware or software.

Command and Data Handling Subsystem (C&DHS): Includes Spacecraft Controls Computer (SCC) except for SCC–based Flight Software Subsystem (FSWS), Command and Telemetry Interface Unit (CTIU) (hardware and firmware), Bus Data Unit (BDU), Science Formatting Equipment(SFE), and Solid State Recorder (SSR)

C&DHS Command: This is a command which a C&DHS component accepts, decodes and executes.

C&DHS Provided Services: The C&DHS provides several services to Spacecraft equipment such as synchronization and time services, sampling telemetry, gathering telemetry, distributing telemetry, accepting and validating uplink command data transfers, accepting and validating SCC–based FSWS command data transfers, replicating and distributing ancillary data packets, accepting the command data containing an SCC OK message then generating and distributing the IMOK messages, etc.

C&DHS Safe Mode Commanding: The CTIU can issue a series of safe–mode commands to designated recipients upon command.

Command: A signal or message (series of symbols) when received will cause a predetermined response such as (a) enabling/disabling an autonomous function by the CTIU firmware or (b) hardware responding to a signal sent to an active analog interface by the BDU.

Command Data Transfer: This is data transfer from a ground controller or from the SCC–based FSWS. It contains 1553B message to be delivered to some Spacecraft equipment. The message content could be a command, a memory load, a table load, ancillary data, etc.

CTIU [active]: The active CTIU is powered on, does uplink command data processing and all the functions associated with the CTIU, including being C&T Bus Controller (BC).

CTIU [standby]: The standby CTIU is powered on, does uplink command data processing, and a limited subset of functions associated with the CTIU. It is a C&T RT. It is not a hot standby.

Data Acquisition: Data acquisition monitors of the forward link bit stream received from the S–band transponder after RF–bit and bit lock are asserted and looks for the synchronization marked in the Command Link Transfer Unit (CLTU).

Decode: Interpret a data transmission message header/trailer or a command.

Delivery Time: The time starts when the CTIU receives/accepts the message and ends when the destination receives it. Start time for a command data transfer is defined to occur when the CTIU has received the command whether from the forward link service or from the SCC–based FSWS. End time: (a) for a C&T Remote Terminal (RT) is defined as the end of the minor cycle in which the message was stored in the RT subaddress (b) for execution by the active CTIU, when the distribution process transfers the command to the CTIU processor for execution.

Distribution: The active CTIU distributes by "giving out" the 1553B message either for delivery to another Spacecraft element or to itself for execution based on RT address in the 1553 command word. After gathering and formatting telemetry, the active CTIU also distributes telemetry based on resident algorithms to various destinations such as the S–band transponders or hardlines or SCC–based FSWS.

FSWS: Flight Software Subsystem which includes SCC–based software and CTIU firmware

Health and Safety (H&S) telemetry: The 1 kilobits per second (kbps) contingency telemetry stream. This telemetry is included in the housekeeping telemetry stream.

High Rate Data Link: These high–rate point–to–point interfaces are between the Science Equipment Formatter (SFE) and high–rate science instruments used for transmitting packetized science data.

Hot Standby: Such a computer is fully loaded with application software, running and processing as though it were the computer in control, and can almost instantaneously replace the computer that is in control. There is no "hot standby" in the C&DHS.

Housekeeping (H/K) Telemetry: The 16–kbps telemetry data stream which can be transmitted in real–time and/or recorded for later playback to Communication Subsystem (COMS).

IM OK: This is issued by the C&DHS as the result of receiving the SCC OK message from the SCC–based FSWS. The SCC OK message is a result of a positive health check of the SCC hardware and SCC–based FSWS.

Message: The term is reserved for a 1553B bus message.

Point–to–point Interfaces: Command and telemetry point–to–point interfaces are between the BDU and a Spacecraft element and consist of relay drive, logic pulses, active analog, passive analog, active bi–level, passive bi–level and serial Input/Output (I/O) interfaces

Precise Time Service: This is used by instruments. It consists of receiving a time code message containing the Spacecraft clock data in the C&DHS and a time mark on the Time Mark and Frequency (TM&F) bus. At the time mark, the the data in the time code message can be used to set the internal clock.

Prime: A prime C&DHS component is powered on and is selected to be the one used operationally.

Processing: Implies a C&DHS component has acted (interpreted, computed) on information.

Redundant: A redundant C&DHS component is the back–up for the prime. It may or may not be powered on.

SCC Closed Loop Data: This is data gathered by the C&DHS and sent to the SCC–based FSWS for onboard control functions. This data comes only from the Spacecraft subsystems.

Spacecraft Equipment: This is defined to be Spacecraft subsystems and Instruments.

Standard Time Service: The user receives a synchronization service and a time code message. At the start of minor cycle zero, the data in the time code message is used to set the internal time of the user.

Synchronization Service: This is a 1553B mode command whose data word contains the major/minor cycle counts. The user synchronizes their internal cycles with those of the active CTIU.

Time Mark: A signal sent over the TM&F bus to designated recipients. The signal is coincident with a hardware generated (in CTIU) time mark instance. This occurs every 1.024 seconds which is also coincident with the start of each major cycle.

Time Mark Instant: The CTIU issues an interrupt every 1.024 seconds. Several events are coincident with this time mark instant such as a major cycle begins, the time mark signal is sent over the TM&F bus, downlink of a packet header via the S–band transponder and the PN epoch code time–tag function.

Uplink Command Data Transfer: This is issued by the ground controller and transmitted to the satellite. It may contain commands, memory loads, table loads, etc.

Validated Commands: These are defined as command data transfers which have been successfully received over a communication link within the total communication path between the source and destination. Only validated command data transfers can be delivered to the designated recipient.

3.1.2 C&DHS Functions

The C&DHS provides onboard computing resources to accomplish Spacecraft control and digital communications in support of inter–module, intra–subsystem, and inter–subsystem data traffic. It is responsible for the baseband handling of all uplinked messages received from the COMS and for coordinating the telemetering of all Spacecraft and Instrument–generated data to be downlinked through the COMS or hardlines.

There are a number of services the C&DHS provides to subsystem components and Instruments to accomplish control and communications. These services include:

a. Distribution of realtime and stored commands received from the ground controller or the onboard software.

b. The periodic gathering and formatting of Spacecraft equipment housekeeping telemetry for transmission to the ground and the onboard software.

c. The gathering, formatting, multiplexing, recording and playback of multiple streams of packetized Instrument science data.

d. The generation and distribution of synchronization, standard time and precise time services.

e. The onboard communication of digital data between the distributed hardware and software components of Spacecraft subsystems and between Spacecraft subsystems and Instruments.

f. Providing the processing and software resources required for the execution and storage of the programs and data belonging to the onboard subsystems.

g. The input and output of data from/to subsystem sensors and effectors and instruments, including appropriate signal conditioning and conversion of signals between the analog and digital domains.

h. Accepting the SCC–based FSWS prepared and formatted ancillary data message, then replicating and delivering the ancillary data message to the onboard instruments and to the ground for ground system use.

3.1.3 C&DHS Diagrams

The first–level layout of the subsystem components on the Spacecraft is shown in Figure 1.

3.1.4 C&DHS Description

3.1.4.1 C&DHS Components

Spacecraft Controls Computer

The SCC provides control of most Spacecraft functions. There are redundant SCC processors which implement the MIL–STD–1750A Instruction Set Architecture. Once loaded, the active SCC's software provides a real–time Operating System (OS) kernel and supports the execution of application FSWS. The software is written, to the extent possible, in the Ada programming language. The backup SCC is in a cold–standby state, but can be simultaneously powered and host the full software load but is never a hot standby.

Command and Telemetry Interface Unit

The CTIU is the central interface I/O component for the C&DHS. Both the standby and the active CTIU: (1) provide the communication interfaces to the COMS for uplinked command data transfers, (2) accepts and validates the uplinked command data transfers and (3) can be individually commanded. Only the active CTIU is able to: (1) accept command data transfers from the active SCC–based FSWS, (2) distribute command data transfers to Spacecraft equipment, (2) gather data from the Spacecraft equipment and instruments, (4) format and distribute data to the SCC–based FSWS, (5) distribute H/K telemetry or inclusion in the science data stream, (6) format and distribute downlink data via the S–band transponder and (7) provide Spacecraft master time reference and synchronization and time service.

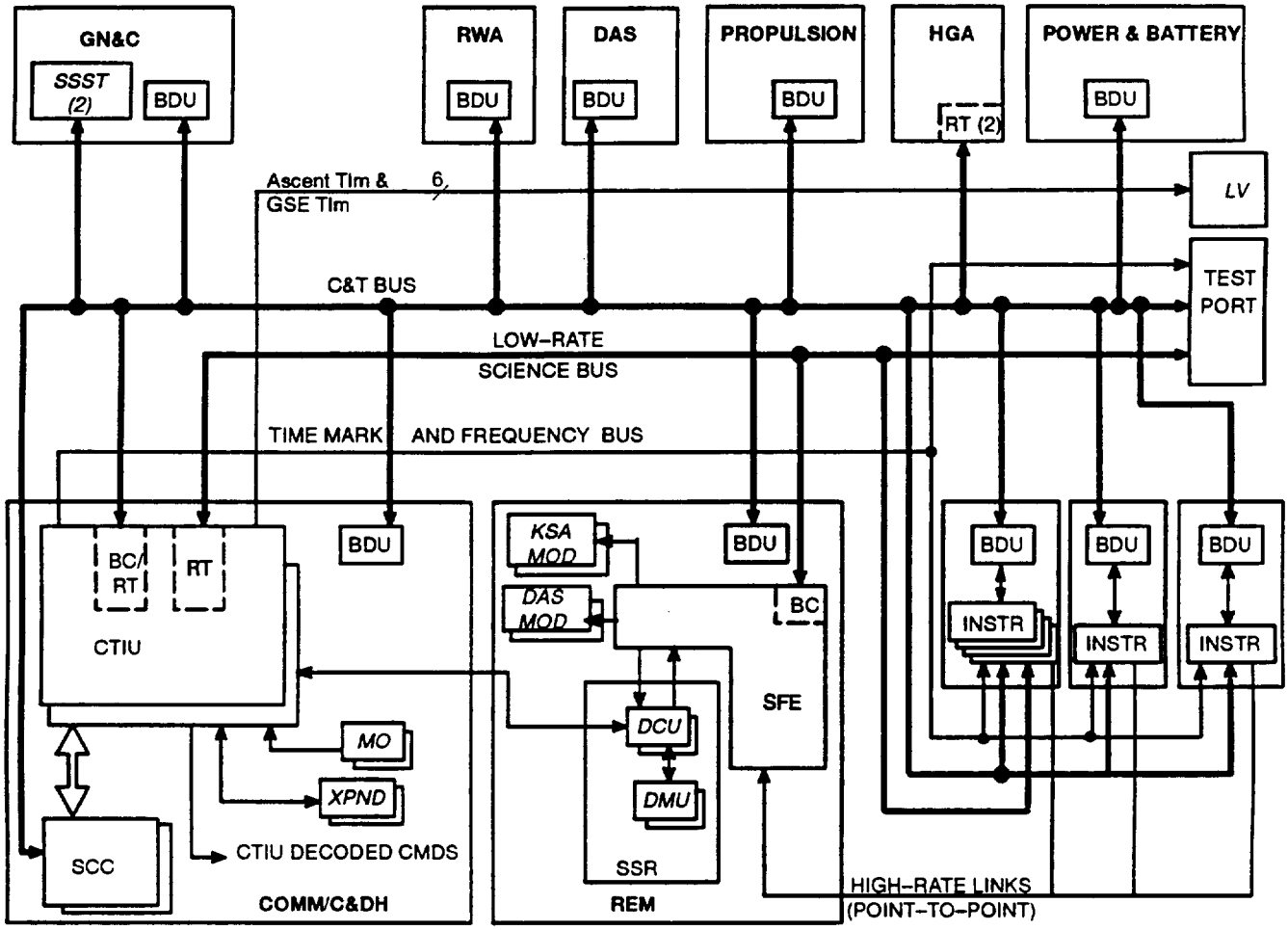

LEGEND

BC	= MIL-STD-1553B Bus Controller	*MO*	= Master Oscillator
BDU	= Bus Data Unit	*MOD*	= Modulator
C&T	= Command & Telemetry	*KSA*	= Ku-band Single Process
CTIU	= Command and Telemetry Interface Unit	REM	= Recorder Equipment Module
DAS	= Direct Access System (Comm)	RT	= MIL-STD-1553B Remote Terminal
DCU	= Data Control Unit	RWA	= Reaction Wheel Assembly
DMU	= Data Memory Unit	SCC	= Spacecraft Controls Computer
GN&C	= Guidance Navigation and Control	SFE	= Science Formatting Equipment
GSE	= Ground Support Equipment	SSR	= Solid State Recorder
HGA	= High Gain Antenna	SSST	= Solid State Star Tracker
H/K	= Housekeeping	TLM	= Telemetry
INSTR	= Instrument	*XPND*	= S-band Transponder
LV	= Launch Vehicle		

NOTE: All busses are redundant
Italics : Non-C&DHS Equipment
BOLD : Equipment Module

MIL-STD-1553B BUS

Indicates number of components

Figure 1. Command and Data Handling Subsystem Block Diagram

The following CTIU interfaces are shown in Figure 1:

a. The Command and Telemetry (C&T) bus is central to transferring the Spacecraft equipment commands and telemetry data within the Spacecraft. This data bus is a redundant serial "housekeeping" data bus using a Digital Time Division Command/Response Multiplex Data Bus (MIL–STD–1553B) protocol. The active CTIU is the C&T BC. The standby CTIU has a C&T RT interface. Any operational SCC also has a C&T RT interface.

b. The active CTIU and active SCC–based FSWS utilize two high speed serial I/O interfaces. The SCC–based FSWS transmits command data transfers to the CTIU. The CTIU transmits H/K telemetry and SCC closed loop data to the active SCC–based FSWS.

c. Each CTIU has a Low–Rate Science (LRS) RT interface to the SFE for inclusion of telemetry and ancillary data in the low–rate science data stream.

d. Each CTIU interfaces with the SSR for the recording and playback of the H/K telemetry via the S–band transponders.

e. The CTIUs interface with COMS to receive the Master Oscillator (MO) frequency reference.

f. Each CTIU interfaces with the S–band transponders for the Forward Link (uplink), Return Link (downlink) Services, to support TONS doppler time–tag measurement and provide pseudo–noise (PN) time–tag measurement. The S–band transponders are the primary downlink for real–time telemetry and the only uplink for commands.

g. Each CTIU can control the TM&F bus for delivery of the time mark in support of precise time services.

Bus Data Units

The BDU is an internally–redundant component whose function is to provide a standard set of command and telemetry interfaces to Spacecraft housekeeping components and instruments. BDUs are distributed throughout the Spacecraft. A BDU communicates via a C&T RT with the active CTIU. The BDU Command and Telemetry Execution Unit (CTEU) routes MIL–STD–1553B messages to and from the RT, performs message processing, issues effector commands, samples and formats sensor telemetry data for transmission to the CTIU.

Standardized I/O circuit modules interface the BDU to sensors, effectors, and other units. The interfaces permit the BDU (1) to send relay drive and logic pulse commands, (2) to deliver commands via a serial I/O interface, and (3) to sample telemetry via BDU serial, active/passive analog, or active/passive bi–level telemetry interfaces. The BDU provides signal conversion and signal conditioning between the analog and digital domains.

Science Formatting Equipment

The SFE is part of the high–rate data handling system. The SFE accepts asynchronous packetized data, as specified in the General Instrument Interface Specification (GIIS), from both the LRS bus and multiple, redundant high–rate rate data link (HRDL) electronic interfaces. The packets are then

assembled into Consultative Committee for Space Data Systems (CCSDS) transfer frames as specified in the Data Format Control Book (DFCB), and transferred synchronously to the COMS modulators. The SFE is capable of generating and inserting fill frames when insufficient data is available to provide these ports with continuous and contiguous Channel Access Data Units (CADU).

The SFE can route selected formatted input data to the solid state recorder, or simultaneously directly to the COMS modulators. The SFE also routes the playback data output of the SSR to the input of the COMS modulator for transmission.

Solid State Recorder

The SSR consists of two identical, redundant Data Controller Units (DCUs), from two identical Data Memory Units (DMUs) and necessary unit interconnecting cables. The complete mass memory capability is provided by the DMUs plus the local memory contained within the DCUs. In operation, only one of the DCUs is active at a given time and it supplies power to the DMUs. The DCU contains the record/playback data processing, command and telemetry processing and power circuitry.

The SSR is capable of recording four simultaneous data streams from the SFE at a data stream rate of 37.5 Megabits per second (Mbps), corresponding to an aggregate data rate of 150 Mbps. The SSR is also capable of playing back four simultaneous data streams to the SFE at any data stream rate up to a maximum of 37.50 Mbps, corresponding to a maximum aggregate data rate of 150 Mbps, as determined by the data clock supplied by the SFE.

The SSR is capable of sorting and recording Spacecraft Science Data in separate logical data buffers according to the source of the data. This capability provides for selective playback of this data.

The SSR is also capable of recording and playing back H/K Telemetry data to each one of the CTIUs. A telemetry input data rate of 16 kbps is supported. The SSR plays back stored telemetry data at a commanded rate of 256 or 512 kbps.

3.1.4.2 Command Data Processing

3.1.4.2.1 Uplink Command Data Transfers Processing

The active and standby CTIU continuously monitor the COMS uplink interfaces for command activity. Each CTIU has its own unique Spacecraft Identification (ID). The CTIUs only process the uplink command data transfers which contain their Spacecraft ID. All other uplink command data transfers containing a different Spacecraft ID will be ignored.

The CTIUs process the uplink command data transfers on a first–come basis. Uplink command sequentiality is maintained by using the Command Operations Procedure–1 (COP–1) protocol. The standby CTIU can also receive commands via the C&T bus.

Both the active and standby CTIUs synchronize with the transfer frames, perform validation checks on the transfer frames and validation checks on the messages. Each CTIU may receive uplinked command data transfers addressed to it for decoding and execution via the uplink (Forward Link service) or if standby, via the C&T bus.

3.1.4.2.2 SCC–Based FSWS Command Data Transfer Processing

The active SCC–based FSWS performs command data transfer flow control and prioritization among the command data transfers before transmitting them to the active CTIU. The active CTIU validates the command data transfers.

3.1.4.2.3 Accept, Decode and Distribute Command Data Transfers

The active CTIU accepts, decodes and distributes the command data transfer based on the RT address contained in the 1553B command word. Distribution consists of either transmitting the content of the command data transfer on the C&T bus as a message or the addressed CTIU executing a CTIU command. Both the delivery and execution are done as scheduled tasks.

3.1.4.2.3.1 Delivery

The active CTIU inserts the C&T bus message into a scheduled delivery slot and its BC transmits the message to the recipient on the C&T bus. The 1553B command word specifies the recipient and the specific data storage location involved. Commands are stored in RT subaddress 1 and memory loads are stored in RT subaddress 2. The recipient then accesses the data as required.

3.1.4.3 Telemetry Data: Sampling, Gathering, Formatting, and Distribution

3.1.4.3.1 Telemetry Sampling

Spacecraft equipment telemetry is sampled under the control of onboard tables. These tables are modifiable during Integration and Test (I&T). The tables are also modifiable on–orbit. Instruments and certain Spacecraft subsystems have internally resident sampling tables. BDUs also sample Spacecraft equipment telemetry. The BDU receives a BDU sample schedule table per a CTIU resident schedule and responds by sampling the data specified. The sampled data is gathered per a CTIU resident schedule.

3.1.4.3.2 Telemetry Gathering

Telemetry gathering is done by the active CTIU issuing a scheduled gather request to a C&T RT. The recipient responds by transmitting the data from a pre–determined RT subaddress.

3.1.4.3.3 Telemetry Data Formatting

H/K telemetry, H&S telemetry, SCC closed loop data and diagnostic datastream are formatted by the active CTIU. The H&S telemetry also appears in the H/K telemetry. The telemetry format for each of these telemetry streams will be the same regardless of Spacecraft operational mode.

3.1.4.3.4 Telemetry Distribution

The active CTIU can be configured to distribute the H/K telemetry (1) in real–time to the S–band transponder for transmission at 16 kbps, (2) to the SSR for recording and subsequent playback for S–band transponder transmission at 256 kbps or 512 kbps, (3) to the umbilical hardline and (4) to the SFE via the LRS bus for inclusion in the low–rate science datastream. The quick–look flag used by EOSDIS and is set based upon command to the CTIU.

The active CTIU can be configured to distribute the H&S telemetry to the S–band transponder for transmission at 1 kbps and to the Launch Vehicle (LV) port.

The active CTIU manages the memory dump operations under the control of the ground controller. The DFCB specifies the Spacecraft memory dump conventions. The diagnostic data stream can be downlinked as either a 1 kbps or 16 kbps data rate. The CTIU provides fill data should memory dump data rate be less than the downlink bandwidth.

The SCC closed loop data is transmitted to the SCC–based FSWS within 16 milliseconds of data being gathered. The FSWS Interface Requirements Document (IRD), 20039967, provides the details.

3.1.4.4 C&DHS Autonomous Functions

All C&DHS autonomous functions can be enabled/disabled on command.

3.1.4.5 Ancillary Data

The ancillary data is prepared and formatted by the SCC–based FSWS and transmitted once every 1.024 msec to the active CTIU as a command data transfer. The SCC–based FSWS sets the quick look flag in the packet as commanded. The CTIU performs the autonomous function of replicating and delivering the ancillary data message via the C&T bus to the designated instruments per a CTIU resident schedule. The CTIU also transmits the packet to the SFE via the low–rate science bus for inclusion in the low–rate science data stream. It is downlinked as science data.

3.1.4.6 SCC OK Message

The active SCC–based FSWS performs a health check over the SCC hardware and itself. If the results are positive, the SCC–OK message is transmitted to the active CTIU every 1.024 seconds as well as the IMOK logic pulse commands to Spacecraft equipment. The CTIU transmits the IMOK serial data messages per a resident schedule to designated recipients upon the receipt of the SCC OK message.

3.1.4.7 ***Reserved***

3.1.4.8 Time and Synchronization Services

Both the active and standby CTIUs utilize a frequency reference from the MO in the COMS.

The CTIUs maintain a master Spacecraft clock in CCSDS day segmented format as specified in the General Instrument Interface Specification (GIIS) and DFCB. This clock provides data for the time code messages sent to designated recipients on the C&T bus per a CTIU resident schedule. Upon power–up, this clock is set to a pre–defined epoch date. Later, the ground controller issues clock commands to set and adjust the time. Once the system is nominally running, the drift is adjusted by sending commands to the MO to adjust its frequency. Time adjustment due to leap seconds is handled as a ground controller command procedure described in the DFCB.

The active CTIU provides a synchronization service. A synchronize with data word is transmitted to designated C&T users per a CTIU resident schedule every 256 millisecond. The receipt of this mode code command and the data content is used to synchronize the users internal cycles with the CTIU. All users are required to have this service.

The time code message contains the expected master clock time at the next time mark instant. A time mark instant is supplied by the active CTIU every 1.024 seconds.

Standard time service consists of the synchronization service and a time code message. The user associates the master clock time provided in the time code message with the beginning of a major cycle.

Precise time service consists of the synchronization service, the time code message and a receipt of a time mark on the TM&F. The time mark is coincident with the time mark instant.

3.1.4.9 Bus Utilization Table

The bus utilization table contains all CTIU resident schedules. It ensures the C&DHS provided services exhibit a deterministically bounded timing performance. The bus utilization table is based on the CTIUs internal cycles. The cycles are (a) minor cycle which is 8 milliseconds, (b) major cycle which consists of 128 minor cycles totaling 1.024 seconds and (c) master cycle which consists of 64 major cycle totaling 65.536 seconds.

3.1.4.10 Science Data Handling

The science data handling segment of the C&DHS comprises the SFE and SSR. The data is formatted per the DFCB and multiplexed into several science streams. The science streams have coding applied for the purpose of downlink error protection. The SFE internally interconnects the science streams, inputs to the SSRs, outputs from the SSRs, and inputs to the COMS modulators.

Any Instrument engineering data transmitted across the science data interface is also considered to be science data by the Spacecraft. In addition to science data, a copy of H/K telemetry and ancillary data is supplied to the SFE for down link with the low–rate science data.

The Instruments transfer high–rate and low–rate science and engineering data packets. Packets are received from high–rate instruments via HRDL science data interfaces and from low–rate instruments via a MIL–STD–1553B bus. Each Instrument is designed to use only one type of science data interface (i.e., low–rate or high–rate). The interface type utilized depends upon the Instrument's peak data output rate and is allocated in the Unique Instrument Interface Document (UIID).

The design implements a variable length packet capability which allows for more than one packet per Multiplexed Protocol Data Unit (MPDU), as well as packets that are split between MPDUs. The design of HRDL supports continuous or burst bit transmission rate up to 63.5 Mbps with overhead.

3.1.4.10.1 Low–Rate Science Bus

Any Instrument which generates science data at less than 100 kbps uses the low–rate science data bus to transfer science data to the Spacecraft. This bus has a maximum bit rate of 1 Mbps; however, the usable throughput is in the range of 500 kbps. Demands on this bus are extremely low, approximately 25 kbps for science data, plus 13 kbps for H/K telemetry, and .5 kbps for ancillary data.

The SFE manages the polling of the instruments on the LRS bus. If a packet is ready for transfer, the Instrument stores the number of octets in the packet in pre–defined location of memory accessible to its LRS RT and sets an indication in its RT's status word. The LRS BC issues a 1553B message to the RT. Upon receipt of the polling message from the BC, the RT returns a message containing:

a. a 1553B status word with an indicator set to indicate a packet is ready to transfer and contains the number of octets in the packet

b. or the indicator is set to indicate no packet is ready to transfer.

The SFE examines the response returned by the RT. If an RT is ready to transmit, the SFE proceeds to transfer the information per the GIIS.

3.1.4.10.2 High–Rate Science Interface

The high–rate interface is capable of packet data transfers at 50 Mbps. The hardware interface design prevents exceeding this data rate input to the SFE, since the Instrument output logic is tightly coupled to the transmitter logic at this data rate. An Instrument may have more than one high–rate interface.

The SFE handles each operating high speed channel in parallel and independently of the others. A CADU is generated for each high speed channel, along with it's unique Virtual Channel Identification (VCID) and multiplexed with other VCID for the several streams, and sent to the Communication Subsystem (COMS)/SSR (with the Playback (PB) bit set).

3.1.5 Interface Definition

The mechanical and electrical interfaces that must exist between the major components and between this item and other items of the Spacecraft are defined herein and in component ICDs.

3.1.5.1 Functional Interfaces

The functional interfaces for the C&DHS are as depicted in Figure 2 and as shown in Table I. In general, the C&DHS provides the computational resource for the various subsystem controls.

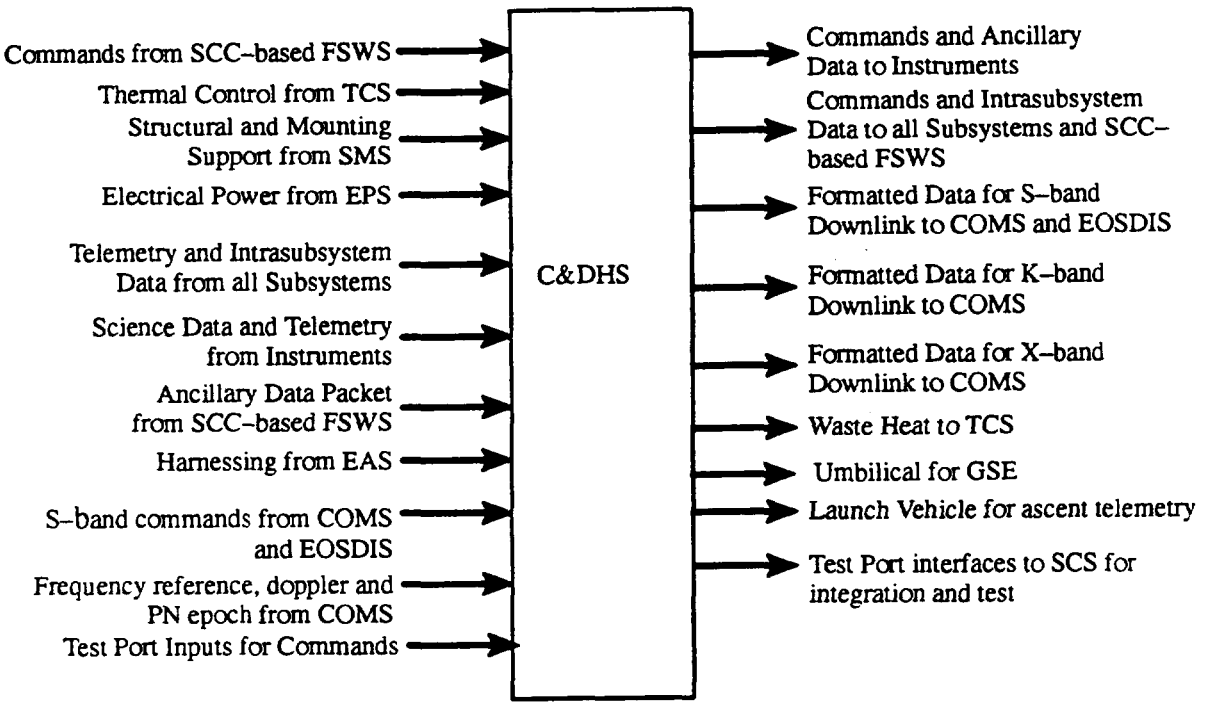

Figure 2. C&DHS Functional Interfaces

Table I. Functional Interfaces

Input	Source	C&DHS Activity	H/W or S/W	Output	Destination	Mode
Thermal Control	TCS	Component temperature maintenance	H/W	Heat	Space	all
Mounting Support	SMS	Structural support	H/W	Stress	Structure	all
Electrical Power	EPS	Primary voltage source	H/W	Secondary voltages	Component's internal circuitry	all
Telemetry and Intrasubsystem data	All S/S and FSWS	C&T bus monitoring, control, telemetry generation	H/W, S/W	Formatted telemetry, commands, ancillary data	COMS, FSWS, S/S H/W	all
Science Data	Instru-ments	Science data formatting	H/W	Formatted data for Ku- and X-band	COMS	science

Table I. Functional Interfaces (Continued)

Input	Source	C&DHS Activity	H/W or S/W	Output	Destination	Mode
Housekeeping Telemetry	Instru-ments	Instrument monitoring, control, tlm generation	H/W	Predefined cmds and formatted tlm	Instrument and COMS	all
Uplink Command Data Transfer	COMS	Routing of commands and data	H/W	S/C cmds and data	Instruments, FSWS and Spacecraft S/S	all
Frequency Reference	COMS	Generate Spacecraft clock	H/W	Clock frequency and time tagged data	Instruments and EOSDIS	all

C&DHS	Command and Data Handling subsystem	H/W	Hardware
CMDS	Commands	S/C	Spacecraft
COMS	Communication Subsystem	S/S	Subsystem
C&T	Command and Telemetry	S/W	Software
EOSDIS	EOS Data and Information System	SMS	Structure and Mechanisms Subsystem
EPS	Electrical Power Subsystem	TCS	Thermal Control Subsystem
FSWS	Flight Software Subsystem	TLM	Telemetry

3.1.5.1.1 Generic Interfaces with Spacecraft Equipment

The C&DHS shall provide a functional command and telemetry interface with Spacecraft equipment. These functional interfaces are depicted in Figures 3, 4, and 5.

Commands: This is a command data transfer from the uplink or issued by the SCC–based FSWS containing memory load initiate, memory dump initiate, and other types of commands which go to the same RT subaddress. They are referred to as messages once they are transmitted to the C&T bus.

The types of data transferred between the C&DHS and individual subsystem, subsystem component or Instrument varies.

3.1.5.1.2 Communications Subsystem Interfaces

The functional interface between C&DHS and COMS, as shown in Figure 6, depicts:

[1] The C&DHS shall interface with the S–band transponders to accept: (a) uplink command data transfers in CLTUs, (b) PN epoch pulse, (c) Doppler Integration end signal and (d) COMS's Doppler measurements information which is needed for TONS processing software resident in the SCC.

[2] The C&DHS shall interface with the S–band transponders to send (a) the real–time H/K telemetry, (b) the real–time H&S telemetry, (c) the SSR playback of the H/K telemetry, (d) the diagnostic data stream to the ground, (e) and Doppler Initiate Signal.

[3] The C&DHS shall accept a frequency reference from the MO.

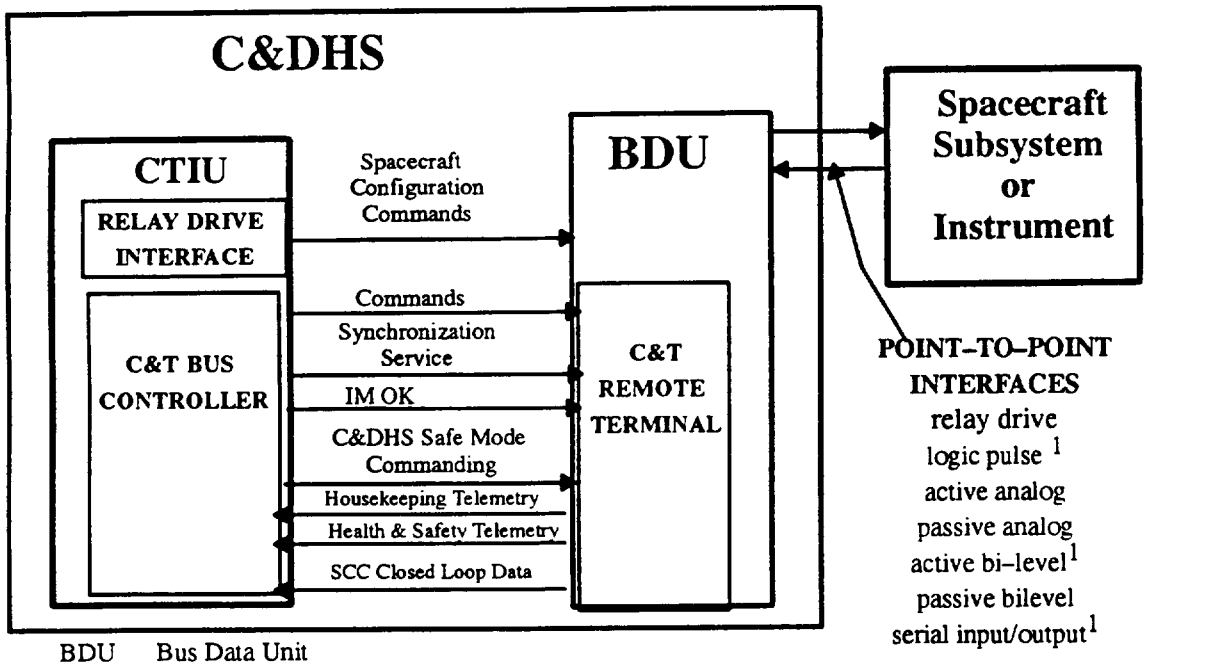

BDU Bus Data Unit
C&DHS Command & Data Handling Subsystem
CTIU Command & Telemetry (C&T) Interface Unit

Note[1] Spacecraft Only

Figure 3. C&DHS Functional C&T Interfaces with Spacecraft Equipment (BDU)

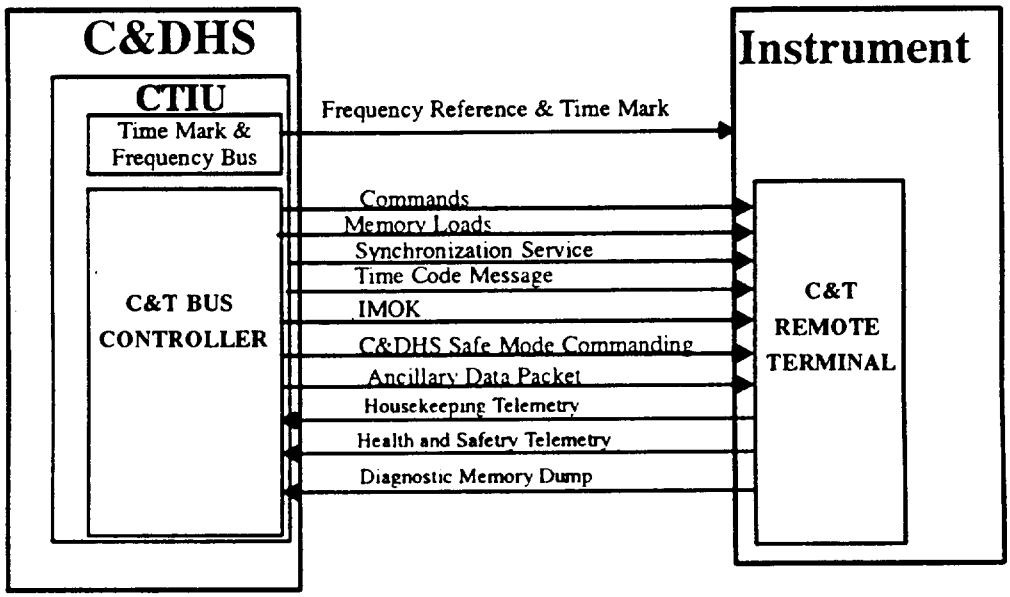

C&DHS Command & Data Handling Subsystem
CTIU Command & Telemetry (C&T) Interface Unit

Figure 4. C&DHS Functional C&T Interfaces with Spacecraft Instrument for an Embedded Remote Terminal

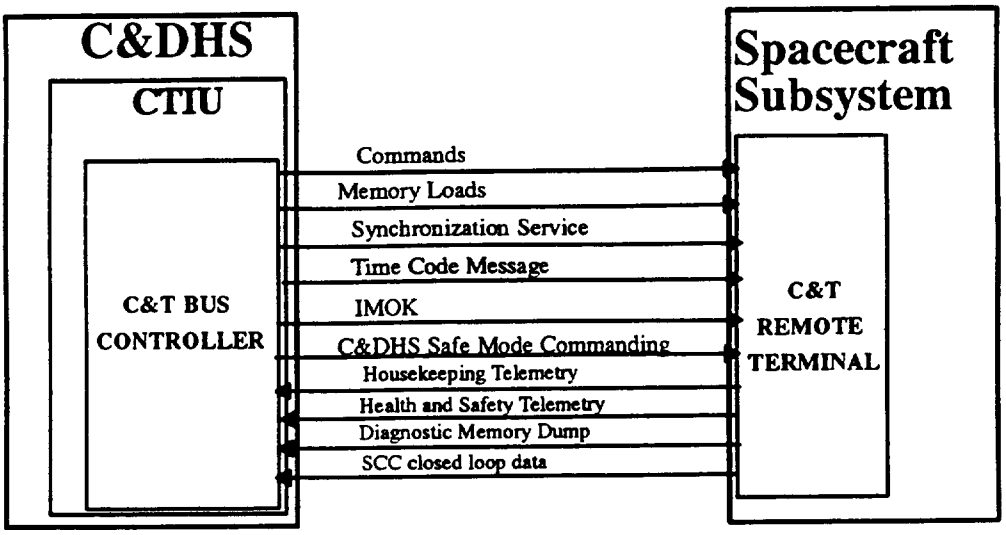

C&DHS Command & Data Handling Subsystem
CTIU Command & Telemetry (C&T) Interface Unit

Figure 5. C&DHS Functional Interfaces with Spacecraft Subsystem with Embedded Remote Terminal

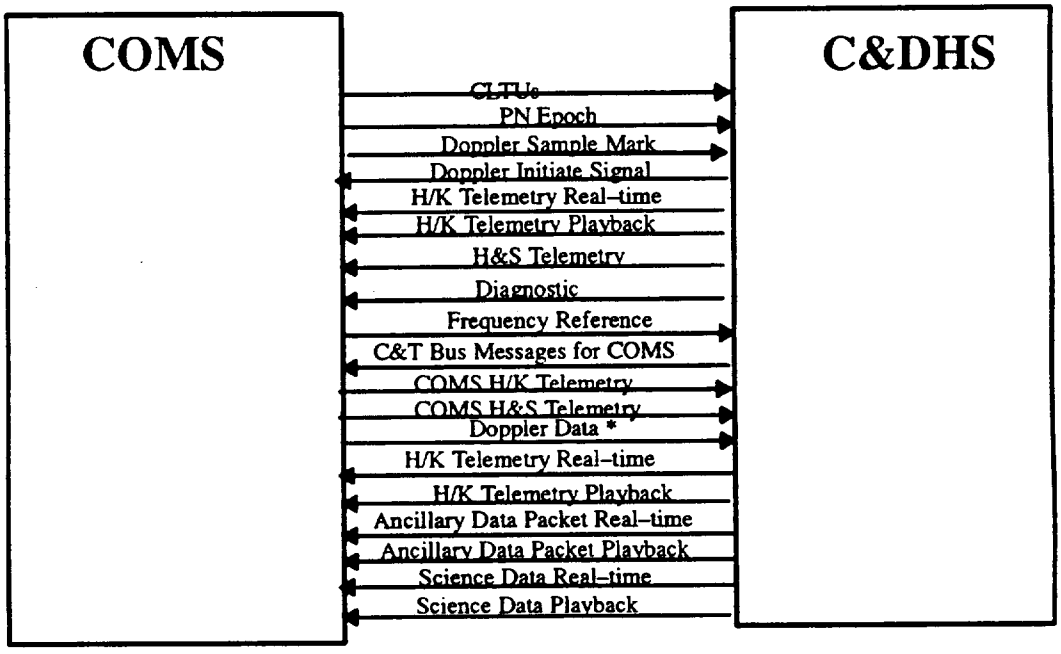

*Doppler Data supports SCC–based TONS function and, when gathered, is part of the SCC closed loop data stream.

C&DHS Command & Data Handling Subsystem
COMS Communication Subsystem

Figure 6. C&DHS Functional Interface with COMS

[4] The downlinking of science data which includes H/K telemetry and ancillary data shall be through interfaces with:

a. the Ku–band modulators

b. the Direct Access System (DAS) modulators.

3.1.5.1.3 Electrical Power Subsystem Interfaces

[1] The C&DHS functional interfaces with the Electrical Power Subsystem (EPS) shall be for primary and secondary power distribution to the C&DHS components.

[2] The C&DHS shall receive all operational and survival power from the EPS via the Electrical Accommodation Subsystem (EAS).

[3] The C&DHS shall be designed to operate from 120 Vdc power with +/– 4% regulation.

[4] The C&DHS shall withstand EPS interface voltage levels up to 132 Vdc without damage.

3.1.5.1.4 Thermal Control Subsystem Interfaces

[1] The C&DHS functional interfaces with the Thermal Control Subsystem (TCS) shall be for the temperature maintenance of the C&DHS components

[2] The C&DHS shall provide the command and telemetry communications for the TCS.

[3] The C&DHS and its components shall utilize the TCS interface as necessary for maintenance of survival and operational temperatures.

[4] The C&DHS shall comply with Section 5, Thermal Interfaces and Section 6, Environmental Interfaces, in the GIS, IS20008501, regarding thermal interfaces, environmental flux parameters, and thermal control hardware.

3.1.5.1.5 Guidance, Navigation and Control Subsystem (GN&CS) Interfaces

The C&DHS functional interfaces with the Guidance, Navigation and Control Subsystem (GN&CS) shall be for the command and telemetry communications for GN&CS components.

3.1.5.1.6 Structure and Mechanisms Subsystem Interfaces

[1] The C&DHS functional interfaces with the Structure and Mechanisms Subsystem (SMS) shall be for structural support of the C&DHS components and the thermal interface.

[2] The C&DHS shall comply with Section 4, Mechanical Interfaces, in the GIS, IS20008501, regarding coordinate systems, physical characteristics, design and construction, mounting, alignment, mechanisms, dynamic characteristics, structural criteria and tooling.

3.1.5.1.7 Propulsion Subsystem Interfaces

The C&DHS functional interfaces with the Propulsion Subsystem (PROPS) shall be for the command and telemetry communications for PROPS components.

3.1.5.1.8 Electrical Accommodation Subsystem Interfaces

The C&DHS interfaces with the EAS shall be the harnesses which provide for the electrical connections between the C&DHS and other subsystems, instruments, and test ports.

3.1.5.1.9 SCC–based Flight Software System Interfaces

The C&DHS functional interfaces, depicted in Figure 7, with the SCC–based Flight Software System (FSWS) shall be for:

a. command and telemetry transmission

b. reception for the various subsystem application software

c. and the reception of ancillary data.

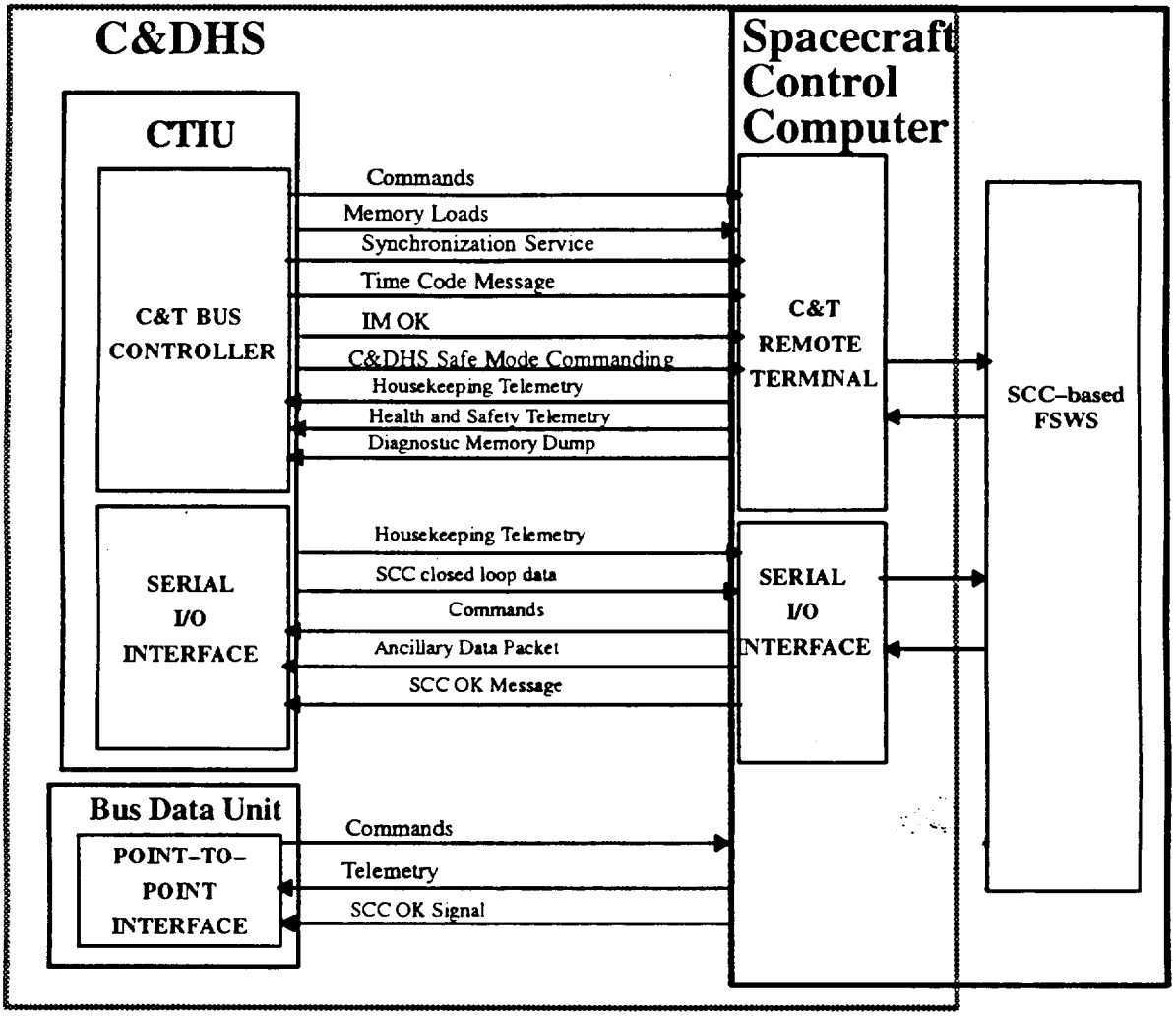

Figure 7. C&DHS Functional Interfaces with SCC–based FSWS

3.1.5.1.10 Launch Vehicle (LV) Interfaces

The C&DHS functional interfaces with the LV shall be for the distribution of H&S telemetry during launch and ascent.

The C&DHS functional interfaces with the LV umbilical shall be for the distribution of real–time H/K telemetry to GSE on one interface and distribution of H/K telemetry or diagnostic telemetry to GSE on the other interface.

3.1.5.1.11 Instrument Interfaces

[1] The C&DHS functional interfaces with the instruments shall be as specified in Sections 3, 5, 6, and 7 of the GIIS, GSFC 420–03–02, for: (a) point–to–point interfaces between the BDU and Instrument, (b) command and telemetry interface, (c) low–rate science interface, (d) TM&F bus interface and (e) HRDL science interfaces.

[2] The C&DHS shall support the Instrument C&DHS requirements defined in the UIIDs. (See RD appendix until UIIDs are official.)

3.1.5.1.12 EOS Data and Information System Compatibility

The C&DHS shall comply with the data format and protocol requirements specified in the DFCB, IS20008658. This will allow compatibility with EOS Data and Information System (EOSDIS).

3.1.5.1.13 Spacecraft Checkout Station (SCS) Interfaces

[1] The C&DHS functional interfaces with the Spacecraft Checkout Station (SCS) shall be for integration and checkout of the C&DHS.

[2] Prelaunch integration and checkout of the Spacecraft shall be supported by incorporating interfaces for external simulators, where appropriate.

3.1.5.2 Physical Interfaces

Similar physical interfaces shall be standardized.

3.1.5.2.1 Electrical Interfaces

[1] The C&DHS shall meet the requirements of the GIS, IS20008501, regarding (a) power, (b) grounds, returns and references, (c) standard signal interfaces, (d) test points, and (e) connectors and contact allocations.

[2] The C&DHS shall meet the grounding requirements of EMC Control Plan, PS20005869.

[3] The C&DHS shall utilize the EAS–provided single–point ground reference.

3.1.5.2.1.1 Test Connectors

The C&DHS shall provide test connections to:

a. the C&T bus,

b. the TM&F bus,

c. the LRS bus.

3.1.6 Major Component List

The major components of the C&DHS shall be as listed in Table II.

Table II. Major Components

Subsystem Component	Qty	Major Function	GFP/GLP
Spacecraft Controls Computer (SCC)	2	FSWS software processing resource	No
Command and Telemetry Interface Unit (CTIU)	2	Central component for Spacecraft commanding and telemetry generation	No
Bus Data Unit (BDU)–Housekeeping	6	Interface to housekeeping equipment for command distribution and telemetry gathering from/to the CTIU	No
Bus Data Unit (BDU)–Propulsion	1	Interface to Propulsion Module	No
Bus Data Unit (BDU)–Instrument	3	Provides point–to–point interfaces for critical and configuration type commands and telemetry	No
Science Formatting Equipment (SFE)	1	Receives, multiplexes, formats, and routes science and housekeeping packets	No
Solid State Recorder (SSR)	1	Storage of housekeeping data for anomaly resolution Storage of formatted frames prior to playback to SFE	No
GFP: Government Furnished Property GLP: Government Loaned Property			

3.2 Command and Data Handling Subsystem Characteristics

3.2.1 Performance

3.2.1.1 Command Reception and Distribution

[1] The C&DHS shall provide the command communications for Spacecraft equipment:

a. by accepting and processing demodulated uplink command data transfers received from the S–band transponders

b. by accepting and processing command data transfers received via the serial I/O interface from the SCC–based FSWS.

[2] The C&DHS shall not be sensitive to the content of non–C&DH command data transfers it (a) accepts, (b) distributes or (c) delivers.

[3] The C&DHS shall continuously receive and process commands at all times.

3.2.1.1.1 Data Formats

[1] The C&DHS shall accept uplink command data transfers formatted as described in Section 5 of the DFCB, IS20008658, with respect to the application data, data packet, the transfer frame and the CLTU.

[2] The C&DHS shall process all command data transfers from the SCC–based FSWS which conforms to the real–time command structures specified in Section 5 of the DFCB, IS20008658 after removing interface protocol data.

3.2.1.1.2 Uplink Command Data Transfer

[1] The C&DHS shall:

a. accept uplink command data transfers up to a maximum of 10 kbps

b. buffer a maximum of 25 uplink command data transfers

c. distribute up to 32 uplink command data transfers per 1.024 seconds

d. notify the ground controllers if buffer space was full.

[2] The C&DHS shall perform all functions associated with the validation and error control of the data received from the S–band transponder electronic interface as specified in Section 3 and 5 of the DFCB, IS20008658.

[3] The C&DHS shall report in telemetry a rejected transfer frame.

[4] The C&DHS shall report the CLCW in:

a. H/K telemetry

b. H&S telemetry

[5] The C&DHS shall report to the SCC–based FSWS the uplink frame status, which includes command acceptance/rejection status, command activity and Spacecraft command counts.

[6] For uplink command data transfers, the C&DHS shall support an undetected Bit Error Rate (BER) of the transported data of no greater than 1×10^{-12}, assuming the Spacecraft links provide an underlying BER of 1×10^{-5}, by complying with all the requirements specified in Section 3 and 5 of the DFCB, IS20008658, including the implementation of CCSDS Path Packet Service with grade of service 2.

3.2.1.1.3 Command Data Transfer Distribution

[1] The C&DHS shall accept, decode and distribute commands as follows:

a. Each command data transfer received by a C&DHS component in the communication path shall be validated.

b. Command data transfers which fail validation by a C&DHS component shall be reported in telemetry.

c. All validated command data transfers shall be delivered in their entirety.

d. All validated uplink command data transfers shall be delivered in the order the uplink command data transfers were received by the C&DHS.

e. All validated command data transfers received from the SCC–based FSWS by the C&DHS shall be delivered in the order the command data transfers were received by the C&DHS to the designated recipient.

[2] In case of conflict, the C&DHS shall distribute real–time ground–to–satellite uplink commands before on–board commands.

[3] The C&DHS shall decode the command destination (1553B command word) in the command structure as defined Section 3 and 5 of the DFCB, IS20008658, for distribution.

[4] The C&DHS shall facilitate the loading, modifications of loads and verification of loads in the embedded processors of Spacecraft equipment.

[5] The C&DHS shall use a standardized convention for memory loads and memory dumps as specified in Sections 3, 5 and 6 of the DFCB, IS20008658, with a dedicated C&T RT subaddresses specified in the GIIS, GSFC 420–03–02.

3.2.1.1.3.1 Uplink Command Data Transfers Distribution

[1] The C&DHS shall distribute validated uplink command data transfers as specified in 3.2.1.6.

[2] The C&DHS shall decode and execute real–time C&DHS commands received from ground operations at any rate up to 32 commands per 1.024 seconds.

[3] The C&DHS shall accept relay drives for a single component at maximum rate of once every 110 milliseconds **(TBR–1)**.

[4] Uplink command data transfers shall be delivered to the destination within .924 seconds of receipt by the C&DHS.

3.2.1.1.3.2 SCC–based FSWS Command Data Transfers Distribution

[1] The C&DHS shall accept command data transfers from the SCC–based FSWS at the rate in keeping with the onboard command distribution as specified in 3.2.1.6. The command data transfers include commands to be delivered via the C&T bus, C&DHS executed commands, the ancillary data packet and the SCC OK message

[2] The C&DHS shall distribute validated SCC–based FSWS issued command data transfers as specified in 3.2.1.6.

[3] The C&DHS shall deliver SCC–based FSWS issued command data transfers (excluding the ancillary data packet and the SCC OK) received in minor cycle N–1 to the destination in minor cycle N+1. This is depicted in Figure 8.

[4] The C&DHS shall accept, decode and execute commands destined for itself from the SCC–based FSWS within the capability of the end hardware to execute it.

	SCC–based FSWS	C&DHS	C&DHS
	transmits command data transfers to C&DHS intended for delivery in N+1	(CTIU) validates message & inserts task in minor cycle task list for N+1	(CTIU/BC) transmits (delivers) tasks in minor cycle task list
Minor Cycle	N–1	N	N+1

BC:	Bus Controller
C&DHS:	Command & Data Handling Subsystem
CTIU:	Command & Telemetry Interface Unit
FSWS	Flight Software Subsystem
SCC	Spacecraft Control Computer

Figure 8. Time–line for Delivery of SCC–based FSWS Command Data Transfers

3.2.1.1.4 C&DHS Commanding

3.2.1.1.4.1 C&DHS Command Formats

[1] The real–time command structures used for C&DHS commands shall be as specified in Section 5 of the DFCB, IS20008658.

[2] The stored command structures used for C&DHS commands shall be as specified in Section 5 of the DFCB, IS20008658.

3.2.1.1.4.2 Commands Executed by the C&DHS

[1] Every C&DHS autonomous function shall be enabled or disabled by command.

[2] Upon command, the C&DHS shall perform pre–planned diagnostic operations and checkout operations of the C&DHS.

3.2.1.1.4.2.1 Spacecraft Configuration Commands

[1] A subset of C&DHS commands shall be utilized to modify Spacecraft configurations which includes the configuration control of the C&DHS.

[2] The C&DHS shall provide the capability to decode and execute up to 64 relay drive commands independent of the command processing software operating in the SCCs and independent of C&T bus operations.

3.2.1.1.4.3 C&DHS Command Execution

[1] The C&DHS shall implement C&DHS commands as specified in Appendix I.

[2] The C&DHS shall execute commands in order of receipt.

[3] Whenever there is a conflict between a ground operations real–time command and an onboard real–time command, the C&DHS shall execute the ground operations real–time command first.

[4] Execution of a C&DHS command shall be unambiguously reflected in telemetry.

[5] A C&DHS command scheduled for delivery by the bus utilization table in minor cycle N by the bus utilization table shall begin execution by the end of minor cycle N+1.

[6] A C&DHS component shall:

a. ignore the receipt a relay drive command if its relay drive circuit is executing a command

b. reflect the event in telemetry.

[7] Execution of a C&DHS command shall be reflected in telemetry no later than 8 seconds after the execution was completed.

3.2.1.1.4.4 Fault Tolerance

[1] No single fault shall prevent the C&DHS to accept, decode and distribute uplink command data transfers to the Spacecraft equipment.

[2] No single fault shall prevent the C&DHS to accept, decode and distribute command data transfers from the SCC–based FSWS to the Spacecraft equipment.

3.2.1.1.4.5 State Commandability

The C&DHS and its components shall be commandable to known states regardless of earlier states.

3.2.1.1.4.6 Toggle Command Exclusion

The C&DHS shall not implement commands which have different functionality depending on current state (e.g., "toggle" commands).

3.2.1.1.4.7 Configuration

The C&DHS shall allow ground operations control of redundancy switching via commands.

3.2.1.1.4.8 Command Safety

No single command shall place the C&DHS into a configuration from which it cannot recover.

3.2.1.2 Telemetry Data: Sampling, Gathering , Formatting and Distribution

[1] The C&DHS shall support the sampling, gathering, formatting and distribution of the following telemetry data streams:

a. H/K telemetry

b. H&S telemetry

c. diagnostic (memory dump) data

d. SCC closed loop data.

[2] The C&DHS shall supply the telemetry data streams (Usage column) to the return link service at the data rates as shown in Table III.

Table III. Return (Telemetry) Links

RETURN LINK SERVICE	ANTENNA	DATA RATE (Maximum Allowable) Chan. 1 (I)	Chan. 2 (Q)	USAGE
TDRSS SSA	HGA	16 kbps	256 kbps	Real–Time H/K telemetry on I Playback of H/K telemetry on Q
TDRSS SSA	Omni	N/A	1 kbps	Contingency H&S telemetry or Diagnostic on Q
TDRSS SMA	HGA	N/A	16 kbps	Real–time H/K telemetry on Q
GN S–band	Omni	16 kbps	512 kbps	Real–Time H/K telemetry Playback of H/K telemetry
Hard–Line 1	Umbilical	16 kbps		Real–time H/K telemetry to GSE
Hard–Line 2	Umbilical	16 kbps		Real–time H/K telemetry or Diagnostic to GSE
Hard–Line	Launch Vehicle	1 kbps		H&S telemetry to Launch Vehicle

Ground Network (GN)
High Gain Antenna (HGA)
Tracking and Data Relay Satellite System (TDRSS)
S–band Multiple Access (SMA)
Ground Support Equipment (GSE)
None Applicable (N/A)
S–band Single Access (SSA)

[3] Only one C&DHS component of a redundant pair shall distribute telemetry at any one time.

[4] The C&DHS shall gather telemetry from Spacecraft equipment.

[5] H/K telemetry shall be distributed by the C&DHS:

a. to the SCC–based FSWS,

b. to the S–band transponder for real–time downlink,

c. for inclusion in low–rate science data stream,

d. recorded on a SSR for later playback via the S–band transponder.

[6] H&S telemetry shall be distributed by the C&DHS:

a. to the S–band transponder for real–time downlink,

b. to the LV port.

[7] The diagnostic data stream shall be distributed by the C&DHS to the S–band transponder.

[8] The SCC closed loop data stream shall be distributed by the C&DHS to the SCC–based FSWS.

[9] The data sampling and data gathering for a data packet for the telemetry downlink shall begin 9 minor cycles before the start of a major cycle. This is shown is Figures 9 and 10 for the H/K telemetry and H&S telemetry.

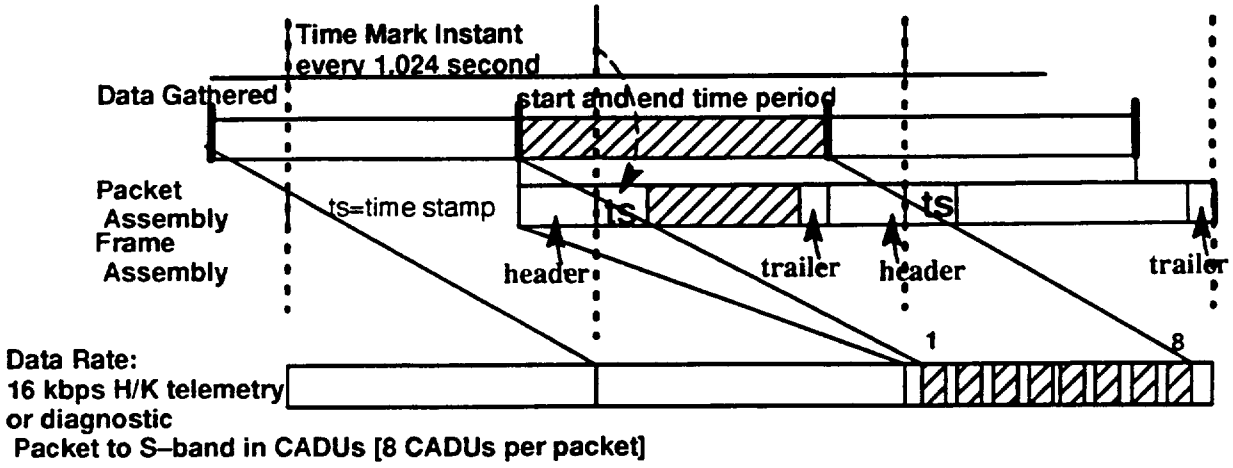

Figure 9. Relationship Between Gathering, Formatting and Transmission at 16 Kbps

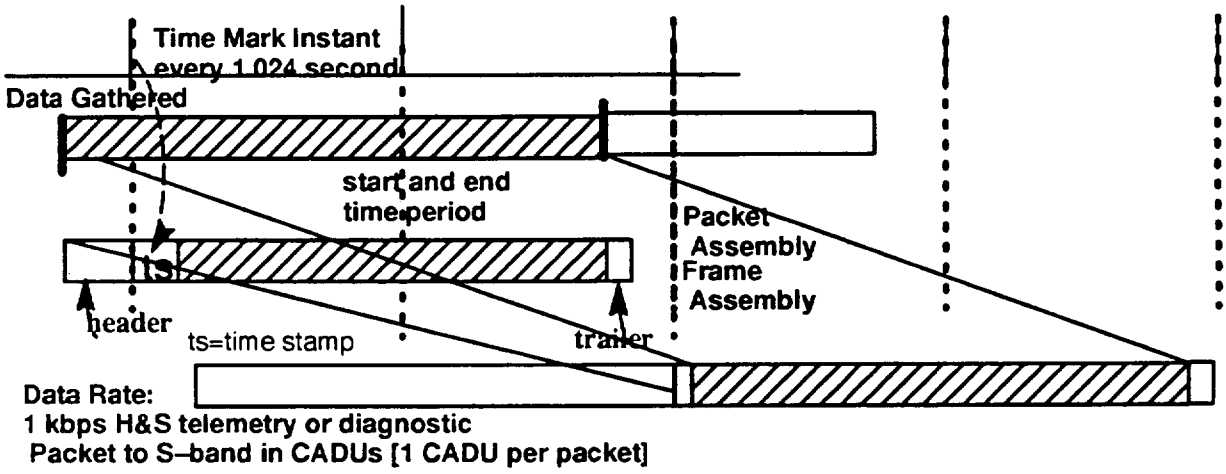

Figure 10. Relationship Between Gathering, Formatting and Transmission at 1 Kbps

3.2.1.2.1 Data Sampling

[1] The C&DHS shall only sample telemetry via a BDU for other Spacecraft equipment.

[2] The data sampling by the C&DHS shall be as specified in paragraph 3.2.1.6.

[3] The C&DHS shall sample telemetry via the BDU within an accuracy of ± 100 micro–seconds (usecs) relative to the Spacecraft clock.

3.2.1.2.1.1 C&DHS Generated Telemetry

[1] The C&DHS shall supply telemetry for inclusion in the H/K telemetry data stream sufficient to:

a. support normal operations so ground controllers can assess the operational state of the C&DHS and its hardware and software components by providing (1) the configuration status (including redundancy) of the C&DHS and its hardware and software

components, (2) the health and safety status data, (3) supplying data indicating resource usage, and (4) support detection of anomalous conditions which may indicate component failures.

b. support diagnostic operations for the analysis of anomalies to aid the ground controllers in fault detection and correction such as (1) indications of sensed failures or anomalies in the C&DHS and its components and (2) any corrective actions taken on–board by the C&DHS.

c. provide C&DHS performance monitoring and checkout which allows the ground controllers to monitor critical functions such as (1) verifying the execution of each C&DHS command, (2) notification of all autonomous switching between the C&DHS redundant paths, (3) data transfers to and from Spacecraft subsystems and instruments, and (4) significant events concerning the C&DHS transactions with the Spacecraft subsystems and instruments.

d. supplying C&DHS H/K telemetry which supports the SCC–based FSWS TMON functions.

e. supply data to allow ground operations to determine the C&DHS's Instrument interface configuration and status.

f. gather telemetry from C&DHS components.

[2] During operations in all Spacecraft modes, the C&DHS H/K telemetry data format shall remain the same.

[3] The C&DHS shall supply a fill pattern in the H/K telemetry stream for data which is not available.

[4] The C&DHS shall supply telemetry for inclusion in the H&S telemetry data stream sufficient to (a) support contingency operations, (b) indicate the current mode of the C&DHS, (c) indicate the current status of the C&DHS, (d) indicate the current configuration of the C&DHS, (e) allow assessment and monitoring of Spacecraft and C&DHS health and safety and, (f) report C&DHS and C&DHS component failures which may threaten Spacecraft survival.

[5] During operations in all Spacecraft modes, the C&DHS H&S telemetry data format shall remain the same.

[6] The C&DHS shall supply a fill pattern in the H&S telemetry stream for data which is not available.

3.2.1.2.2 Data Gathering

[1] The C&DHS shall utilize the C&T bus for telemetry gathering from Spacecraft equipment.

[2] The gathering of telemetry data streams shall be as specified in paragraph 3.2.1.6.

3.2.1.2.2.1 Diagnostic Data Gathering

[1] The C&DHS shall allow diagnostic data gathering only if configured for a diagnostic data stream.

[2] The C&DHS shall only permit one diagnostic data gathering operation at any one time.

[3] The C&DHS shall only support memory dump operations of other Spacecraft equipment if that Spacecraft equipment implements an embedded C&T RT.

[4] The C&DHS shall begin to issue memory dump gather requests in the master cycle subsequent to the one in which it received a command data transfer contains the memory dump parameters as specified in Section 3 and 6 of DFCB, IS20008658.

[5] The C&DHS shall issue the memory dump gather requests at a rate based on the memory dump parameters and compatible with requirements specified in 3.2.1.6.

[6] The memory dump gathering operation shall terminate whenever (a) the last diagnostic gather request is issued to the Spacecraft equipment by the C&DHS or, (b) upon command to reset the memory dump flag in the C&DHS.

3.2.1.2.3 Telemetry Data Format

3.2.1.2.3.1 H/K Telemetry Data Format

[1] There shall be only one telemetry format for H/K telemetry.

[2] The data content of the formatted telemetry streams shall be capable of redefinition on–orbit.

[3] The H&S telemetry shall also be included in the H/K telemetry.

[4] The telemetry format shall allow subcommutation within a major frame and a minor frame.

[5] Telemetry received from a source shall be stored as a data block beginning at a pre–determined location in the area reserved for data in the CADU.

[6] There shall be 8 CADUs in a packet.

[7] The first CADU shall contain the packet header.

[8] There shall be one packet every 1.024 seconds.

3.2.1.2.3.2 H&S Telemetry Data Format

[1] There shall be only one data format for H&S telemetry.

[2] The data content of the formatted telemetry streams shall be capable of redefinition on–orbit.

[3] The telemetry format shall allow subcommutation within a major frame and a minor frame.

[4] Telemetry received from a source shall be stored as a data block beginning at a fixed location in the area reserved for data in the CADU.

[5] There shall be 1 CADUs in a packet.

[6] There shall be one packet every 2.048 seconds.

3.2.1.2.3.3 Diagnostic Data Format

[1] The memory dump data format shall be as transmitted by the memory dump source.

[2] The maximum number of 16–bit data words in a single memory dump block shall be 32.

3.2.1.2.3.4 SCC Closed Loop Data Format

[1] The SCC closed loop data shall be formatted as specified in the FSWS IRD, 200039967.

3.2.1.2.4 Telemetry Packet Format

[1] Each packet shall be formatted as described in Section 6 of the DFCB, IS20008658.

[2] The packet in each telemetry stream shall contain a time stamp which represents the Spacecraft Clock time.

[3] The time stamp shall be the time of the first time mark after the start of packet telemetry gathering as shown in Figures 9 and 10.

3.2.1.2.5 Data Distribution

The virtual channels assignments shall be as defined in Section 3 and 6 of the DFCB, IS20008658. The telemetry distribution is shown in Figure 11.

3.2.1.2.5.1 Data Distribution to SCC–Based FSWS

3.2.1.2.5.1.1 SCC–Based FSWS: H/K Telemetry Distribution

[1] The C&DHS shall forward the H/K telemetry data stream to the SCC–based FSWS on command via the serial I/O interface between the SCC and CTIU.

[2] As specified in FSWS IRD, 20039967, the C&DHS shall (a) provide the additional supporting data needed by the SCC–based FSWS, (b) add the specified message protocol, and (c) deliver the message per the message delivery performance requirements.

3.2.1.2.5.1.2 SCC–Based FSWS: SCC Closed Loop Data Distribution

[1] The C&DHS shall forward the SCC closed loop data stream to the SCC–based FSWS on command.

[2] The C&DHS shall transmit SCC closed loop data via the serial I/O interface between the SCC and CTIU.

[3] In accordance with FSWS IRD, 2003996, the C&DHS shall (a) provide the additional supporting data needed by the SCC–based FSWS, (b) add the specified message protocol, and (c) deliver the message per the message delivery performance requirements.

3.2.1.2.5.2 Science Data Stream: H/K Telemetry Distribution

[1] The H/K telemetry packets shall be included in the low–rate science data stream.

[2] The H/K telemetry packet shall be available for transmission within 512 milliseconds of completion of its generation

[3] Upon command, the C&DHS shall set the quick–look flag in the H/K telemetry packet until commanded to reset the quick–look flag.

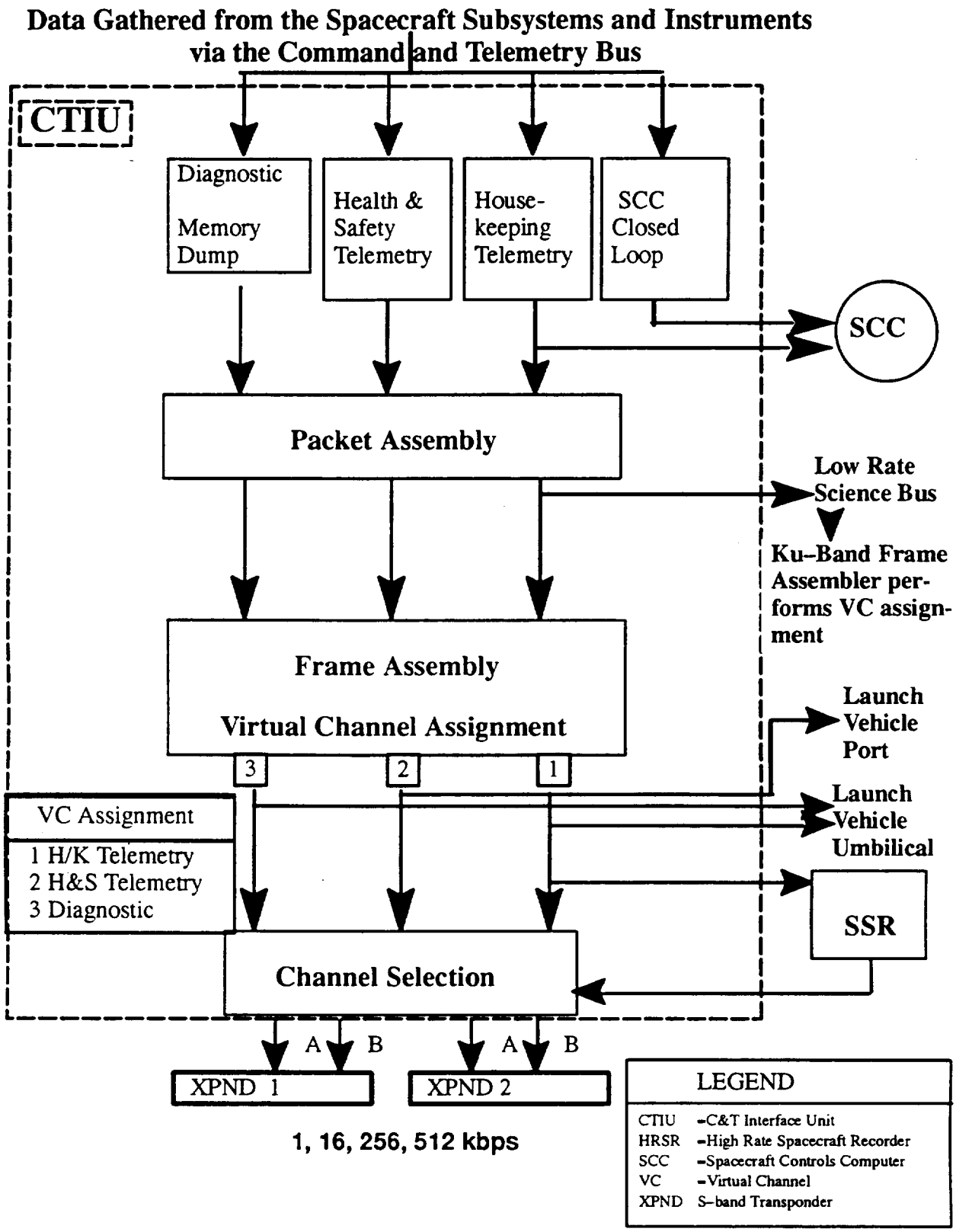

Figure 11. Data Gathered and Virtual Channel Assignment

[4] The C&DHS shall:

a. overwrite the oldest packet waiting for transmission on the LRS bus should it be necessary

b. reflect the event in telemetry.

3.2.1.2.5.3 SSR: H/K Telemetry Data Distribution

[1] The C&DHS shall supply a continuous real–time telemetry data stream for recording on command.

[2] The Virtual Channel Data Unit (VCDU) header's replay flag shall be set in the data stream to the SSR.

3.2.1.2.5.4 S–Band Transponder Data Distribution

3.2.1.2.5.4.1 Real–Time H/K Telemetry Transmission

[1] The C&DHS shall supply a continuous real–time H/K telemetry data stream in the form of CADUs on command.

[2] The C&DHS shall send the first bit of the first CADU in a packet synchronous with the time mark instant.

[3] The C&DHS shall send the first bit of a CADU synchronous with a tick of the Spacecraft Clock.

[4] The C&DHS shall set the replay flag to zero in the VCDU header for real–time.

[5] S–band virtual channel assignments shall be as specified Section 6 of the DFCB, IS20008658.

3.2.1.2.5.4.2 Real–Time H&S Telemetry Transmission

[1] The C&DHS shall supply a continuous real–time H&S telemetry data stream in the form of CADUs on command.

[2] The C&DHS shall send the first bit of the first CADU in a packet synchronous with the time mark instant.

[3] The C&DHS shall set the replay flag to zero in the VCDU header for real–time.

[4] S–band virtual channel assignments shall be as specified in Section 3 and 6 of the DFCB, IS20008658.

3.2.1.2.5.4.3 SSR Playback Transmission

The playback stream shall be sent to the S–band transponders on command.

3.2.1.2.5.4.4 Diagnostic Data Transmission

[1] The C&DHS shall supply a continuous real–time diagnostic data stream on command.

a. The minimum period between data gathering shall be every 6 minor cycles.

b. If the diagnostic stream is active, the C&DHS shall maintain the return service link by transmitting (1) diagnostic data and (2) fill data to complete the packet.

[2] S–band virtual channel assignments shall be as specified in Section 3 and 6 of the DFCB, IS20008658.

3.2.1.2.5.5 LV Port: H&S Telemetry Distribution

[1] The C&DHS shall supply a continuous real–time H&S telemetry data stream to the LV port in the form of CADUs on command.

[2] The C&DHS shall send the first bit of each CADU to be synchronous with the time mark instant.

[3] The C&DHS shall set replay flag to zero in the VCDU header for real–time.

3.2.1.3 Ancillary Data

[1] The C&DHS shall accept command data transfers containing the formatted ancillary data from the SCC–based FSWS.

[2] The C&DHS shall deliver the ancillary data message once per 1.024 seconds to all designated users on the C&T bus in accordance with section 3.2.1.6.

[3] The autonomous delivery of the ancillary data message by the C&DHS shall be enabled or disabled upon command.

[4] The enable or disable state of the autonomous delivery of the ancillary data shall be reported in telemetry.

[5] When the SCC–based FSWS delivers the ancillary data message late and the autonomous delivery of the ancillary data message is enabled, then the C&DHS shall:

a. ignore the late ancillary data message

b. report the event in telemetry.

[6] The data handling of ancillary data message by the C&DHS shall conform to all the requirements associated with the low–rate science data as defined in the GIIS, GSFC 420–03–02.

[7] The ancillary data message shall be included by the C&DHS as part of the low–rate virtual channel science data stream.

[8] The ancillary data shall be provided to instruments within 1.024 seconds of the epoch of the data.

3.2.1.4 Interfaces

The C&DHS shall verify, on command, electronic interfaces for the 1553B busses and the high speed serial I/O interfaces between the SCC and CTIU.

3.2.1.4.1 S–Band Transponder Interface

3.2.1.4.1.1 Uplink (Forward Service) Link

[1] The C&DHS shall receive uplink data command transfers from the S–band transponders via standard RS422 interface circuit as specified in Section 3 of the GIS, IS20008501. All the RS422 interfaces between the CTIU and the S–band transponder receiver are shown in Figure 12.

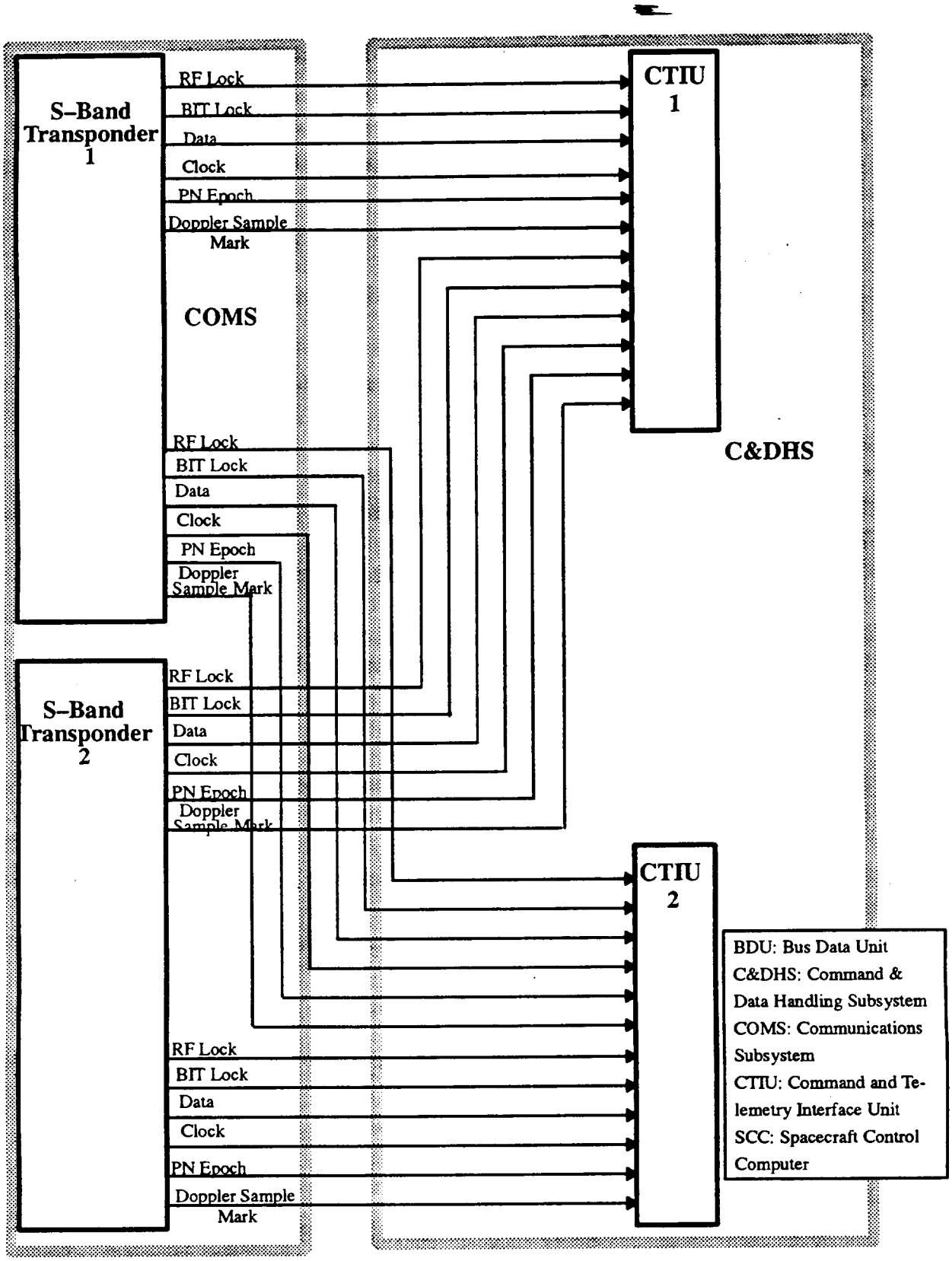

Figure 12. S–Band Transponder to C&DHS Interfaces

[2] The resistor termination option as specified in the GIS, IS20008501, shall be used.

[3] The C&DHS shall accept the data clock, the RF lock, bit–lock and command uplink data transfer from the S–band transponder.

[4] The CLTU timing for input from the S–band transponder, as depicted in Figure 13, shall be:

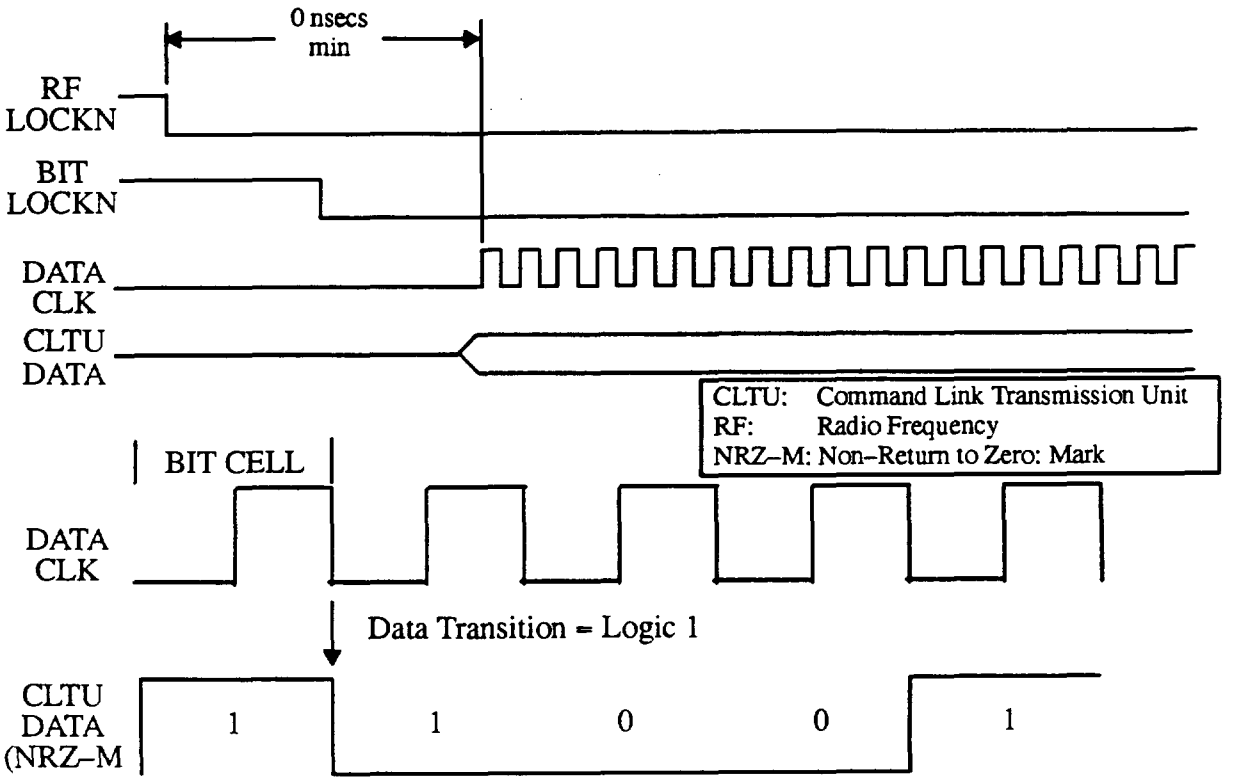

Figure 13. CLTU Timing For Input From S–Band Transponder

a.	rise and fall times:	<= 100 nano–seconds (nsecs) for both clock and data
b.	clock duty cycle:	50% ± 10%
c.	clock to data skew:	± 0.25 X Bit Cell (clock rising edge including duty cycle)
d.	format:	Non–return to Zero: Mark (NRZ–M).
e.	Data transition at beginning of bit cell	= Logic 1

f. The S–band transponder receiver data clock rates are:

1. 125 Hertz (HZ)
2. 1 kHz
3. 2 kHz
4. 10 kHz.

[5] The rate of reception shall be determined solely by the interface clock rate.

[6] The C&DHS shall select either S–band transponder for the prime source of command uplink data transfers.

[7] The C&DHS shall monitor the bit stream to detect a CLTUs synchronization marker after RF and bit locks are asserted.

[8] The C&DHS shall select the transponder interface with a valid synchronization marker.

[9] The C&DHS shall lose data acquisition whenever bit or modulation lock is lost.

[10] A codeblock which is "in process" shall be rejected whenever data acquisition is lost.

3.2.1.4.1.2 Doppler Measurement Interface

[1] The C&DHS shall receive Doppler Sample Mark signals from the S–band transponders via standard RS422 interface circuit in accordance with requirements specified in Section 3 of the GIS, IS20008501. This is depicted in Figure 12.

[2] The doppler interface used shall be selected by command.

3.2.1.4.1.3 PN Epoch Interface

The C&DHS shall receive Pseudo–Noise (PN) epoch signals from the S–band transponders via standard RS422 interface circuit in accordance with requirements specified in Section 3 of the GIS, IS20008501. This is depicted in Figure 12.

3.2.1.4.2 S–Band Downlink Interfaces

3.2.1.4.2.1 S–Band Downlink (Return Service) Link

[1] The C&DHS shall provide 2 sets of two channels to each S–band transponder for cross–strapping purposes as shown in Figure 14. These are Channel A1, A2 and Channel B1, B2.

[2] Each of these channels shall be comprised of (a) data, (b) a bit–rate clock, and (c) a two times bit–rate clock.

[3] The C&DHS shall apply forward error correction coding as required to the data transmitted on the S–band links such that these data may be recovered after transmission to ground operations with an undetected Bit Error Rate (BER) no greater than 1×10^{-7}, assuming an underlying BER of 1×10^{-5} on the communications links external to the Spacecraft. This service corresponds to Grade of Service 2 as defined in CCSDS 701.00–R–3.

[4] The C&DHS shall covert Non–Return to Zero – Low (NRZ–L) to NRZ–M data.

[5] The C&DHS shall supply continuous real–time data at rates commensurate with the capabilities of the S–band transponder channel being utilized.

[6] As a minimum, the C&DHS shall support the configurations depicted in Table IV with the two S–band transponders in all mission phases.

[7] No single fault shall prevent the C&DHS from transmitting telemetry to the S–band interface.

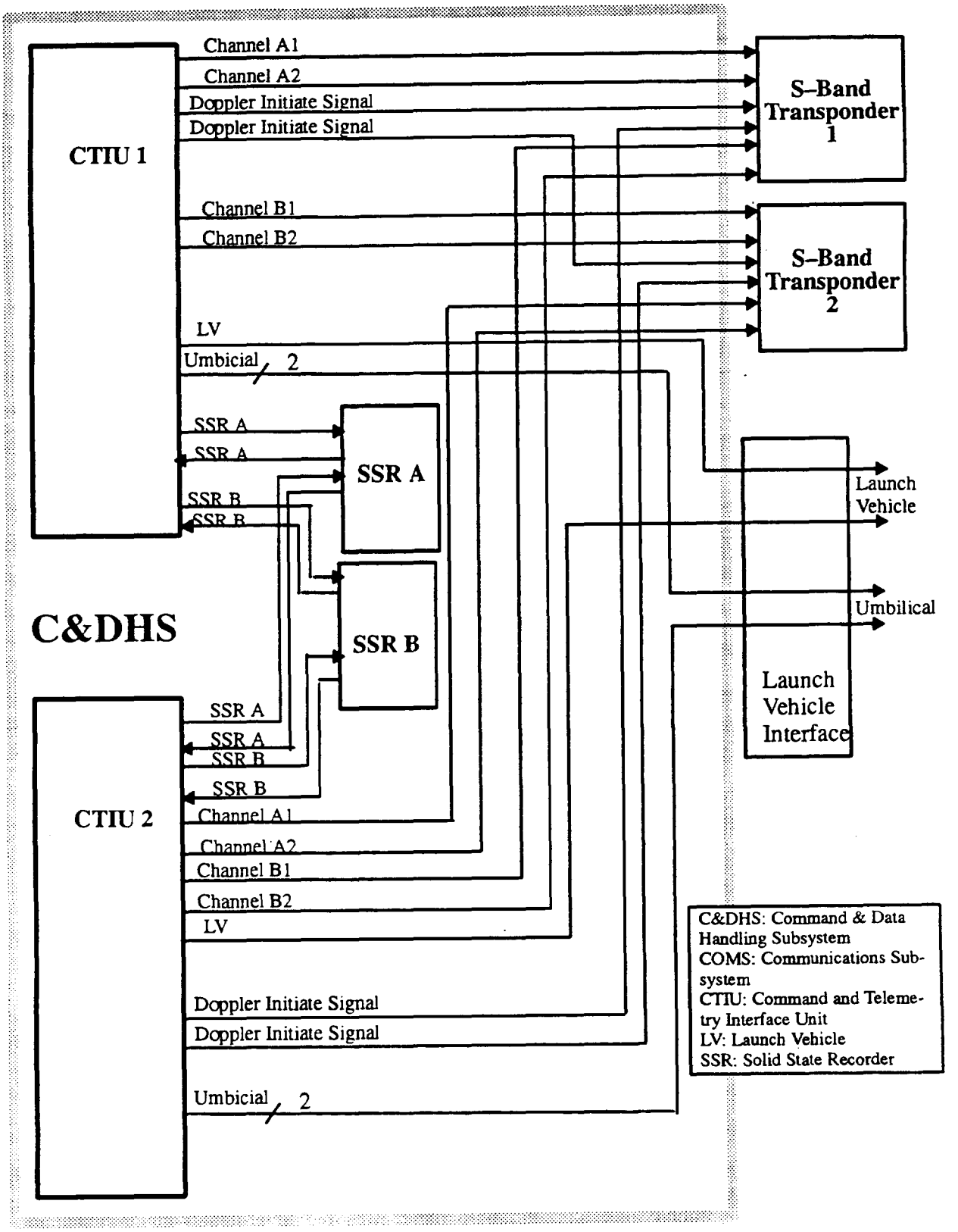

Figure 14. Downlink Interfaces

Table IV. S–Band Transponder

Transponder A				Transponder B			
Channel–1 [I]		Channel–2 [Q]		Channel–1 [I]		Channel–2 [Q]	
H/K	@ 16 kbps	H/K	@ 16 kbps	H&S	@ 1 kbps	H&S	@ 1 kbps
H/K	@ 16 kbps	Diagnostic	@ 16 kbps	H&S	@ 1 kbps	H&S	@ 1 kbps
H/K	@ 16 kbps	H/K P/B	@ 256 kbps	H&S	@ 1 kbps	H&S	@ 1 kbps
H/K	@ 16 kbps	H/K P/B	@ 512 kbps	H&S	@ 1 kbps	H&S	@ 1 kbps
H&S	@ 1 kbps	H&S	@ 1 kbps	H&S	@ 1 kbps	H&S	@ 1 kbps
H&S	@ 1 kbps	Diagnostic	@ 1 kbps	H&S	@ 1 kbps	H&S	@ 1 kbps
Converse: In the following rows, Transponder B is outputting what Transponder A output above and Transponder A is outputting what Transponder B output above.							
H&S	@ 1 kbps	H&S	@ 1 kbps	H/K	@ 16 kbps	H/K	@ 16 kbps
H&S	@ 1 kbps	H&S	@ 1 kbps	H/K	@ 16 kbps	Diagnostic	@ 16 kbps
H&S	@ 1 kbps	H&S	@ 1 kbps	H/K	@ 16 kbps	H/K P/B	@ 256 kbps
H&S	@ 1 kbps	H&S	@ 1 kbps	H/K	@ 16 kbps	H/K P/B	@ 512 kbps
H&S	@ 1 kbps	H&S	@ 1 kbps	H&S	@ 1 kbps	Diagnostic	@ 1 kbps
H/K Housekeeping Telemetry H&S Health and Safety Telemetry				kbps Kilobits per second P/B Playback			

3.2.1.4.2.2 Doppler Initiate Signal

The C&DHS shall transmit a Doppler initiate signal from the S–band transponders via standard RS422 interface circuit in accordance with requirements specified in Section 3 of the GIS, IS20008501. This is depicted in Figure 14.

3.2.1.4.3 LV Interfaces

3.2.1.4.3.1 LV Port

[1] The C&DHS shall provide the H&S telemetry to the launch vehicle during (a) launch and ascent and (b) ground test.

[2] During ascent, the C&DHS shall be configured for the transmission to COMS.

[3] The C&DHS shall transmit the H&S telemetry to the LV port via standard RS422 interface circuit as specified in Section 3 of the GIS, IS20008501. This is shown in Figure 14.

3.2.1.4.3.2 Umbilical Interface

[1] The C&DHS shall transmit the biphase L data to the umbilical interface via standard RS422 interface circuit in accordance with Section 3 of the GIS, IS20008501. This is depicted in Figure 14. Figure 15 depicts the output timing.

[2] The data rates on each of the two active interfaces shall be 16 kbps.

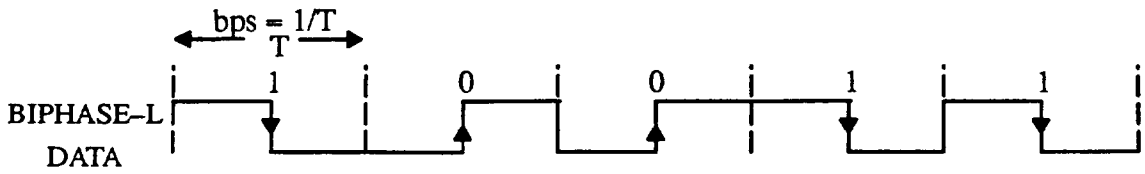

Figure 15. Umbilical Output Timing

3.2.1.4.4 SCC and CTIU High–Speed Serial Interfaces

[1] The high–speed serial data interfaces between the SCC and CTIU shall be via standard RS422 interface circuit in accordance with Section 3 of the GIS, IS20008501, which will be dedicated to transfer of data between the SCC and CTIU components. The interfaces are depicted in Figure 16. The high–speed serial data interface is shown in more detail in Figure 17.

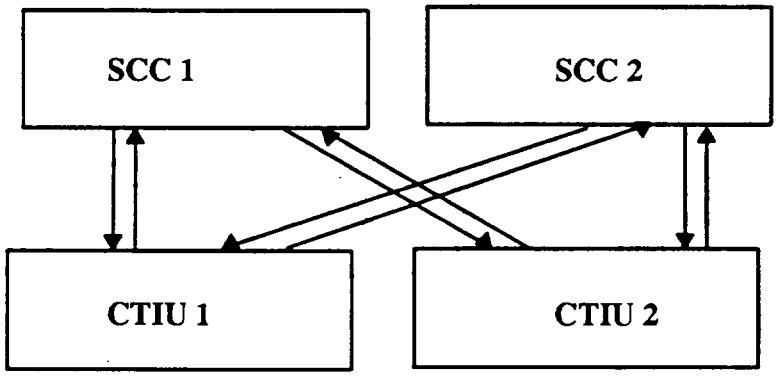

Figure 16. Serial I/O Interfaces between SCC and CTIU

[2] The overall interface shall transfer data in both directions simultaneously.

[3] A configuration command shall select the active interface(s).

[4] The deselected interface(s) shall neither accept nor send signals through its receivers and drivers.

[5] Interface selection modes shall be provided according to Table V.

[6] The interface shall provide a minimum of two separate and functionally independent 256 16–bit data word FIFO buffers, one buffer for the input and one buffer for the output.

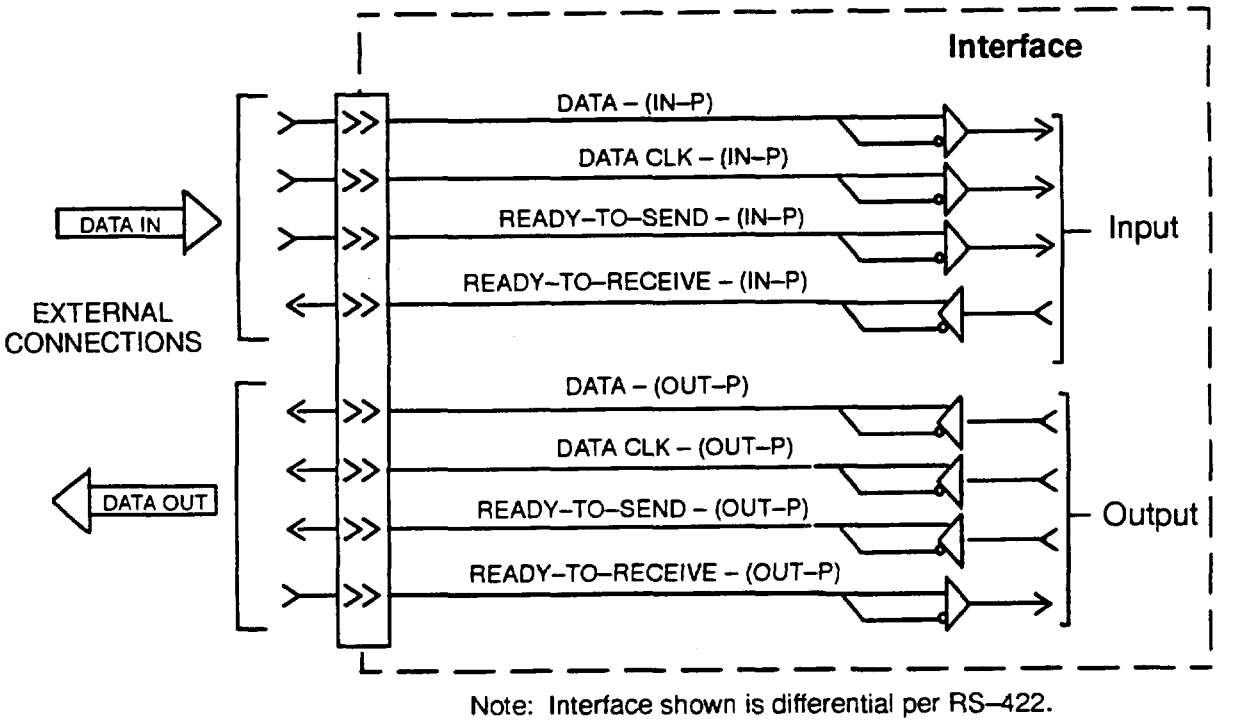

Figure 17. High Speed Serial (HSS) Data Interface Diagram

Table V. High–Speed Serial Interface Modes

Interface Modes	Prime Interface	Redundant Interface	
1	Deselected	Deselected	Required
2	On	Deselected	Required
3	Deselected	On	Required

[7] Signal Definitions:

a. Signal definitions are as follows. Signal sources are in parentheses.

b. DATA: (from sending unit) — NRZ–L data comprised of 16–bit words plus optional parity

c. DATA CLOCK: (from sending unit) — Gated square wave used to synchronize the serial data.

d. READY–TO–SEND: (from sending unit) — True when a 16–bit word is ready to be sent; goes false at the start of the last bit of the word transmitting.

e. READY–TO–RECEIVE: (from receiving unit) true when the receiver is ready to receive a 16–bit word; false when receive is complete or not ready

[8] Input and output data shall be transferred serially on a 16–bit word basis.

a. The bits shall be transferred at a clock rate of 500 kilobits per second (kbps) on both the output and input.

b. The seventeenth bit shall be used for parity.

c. The receiver termination option shall be used as defined in the GIS, IS20008501.

d. The interface timing(**TBD–3**)., shown on Figure 18, shall be as follows:

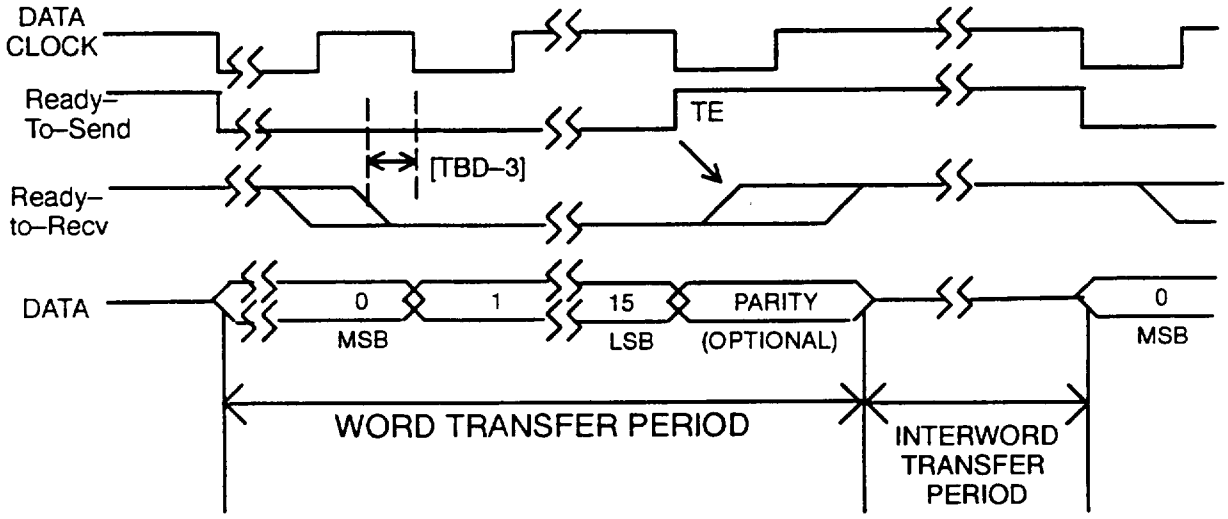

Figure 18. High–Speed Serial Interface Timing

1. Timing shown at sender interface
2. Clock Rate = 500 kHz(Output), 500 kHz (Input); Duty cycle = 50% + 10%
3. Ready–to–Receive may be delayed up to 16 clocks following the leading edge of the Ready–to–Send, and must be stable 4 nsec. before the leading edge of the next clock.
4. The interword transfer period is a minimum of one clock.
5. If the parity bit is not used, the ready–to–send and clock signals terminates one clock earlier than shown.

[9] The word formats shall be as specified FSWS IRD, 20039967.

[10] Throughput:

a. Both the input and output circuits and data buffers shall each support a simultaneous average data rate of at least 250 kbps.

[11] Output Operations:

a. All output operations shall start and end within the same minor cycle.

b. The end of an output operation occurs within the first 7 milliseconds of a minor cycle.

[12] Input Operation:

a. All input operations shall start and end within the same minor cycle.

b. The end of an input operation occurs within the first 7 milliseconds of a minor cycle.

[13] Time–out:

a. A time–out function shall be implemented in the transmit buffer to detect a non–response from the receiver.

b. This time–out shall be activated when the receiver fails to deliver a ready–to–receive signal within 16 clocks following the transmission of a ready–to–send.

c. Until reset, this time–out condition shall inhibit the ready–to–send and any other transmissions.

3.2.1.4.5 SCC OK Signal to COMS/C&DHS BDU

The C&DHS BDU shall receive a signal from the SCC–based FSWS via standard active bi–level interface as specified in Section 3 of the GIS, IS20008501. Figure 19 depicts the SCC OK signal and SCC OK message as issued by the SCCs.

3.2.1.4.6 Point–to–Point Telemetry Interfaces

The C&DHS shall provide standard electrical point–to–point telemetry interfaces for the gathering of telemetry from individual components, Spacecraft subsystems and instruments.

3.2.1.4.7 Data Busses

The C&DHS shall have two MIL–STD–1553B data busses:

a. the Command and Telemetry (C&T) Bus

b. the LRS Bus.

3.2.1.4.7.1 Common Bus Characteristics

[1] Utilization of the optional "Subsystem" and "Terminal" flag bits in the status word shall be supported.

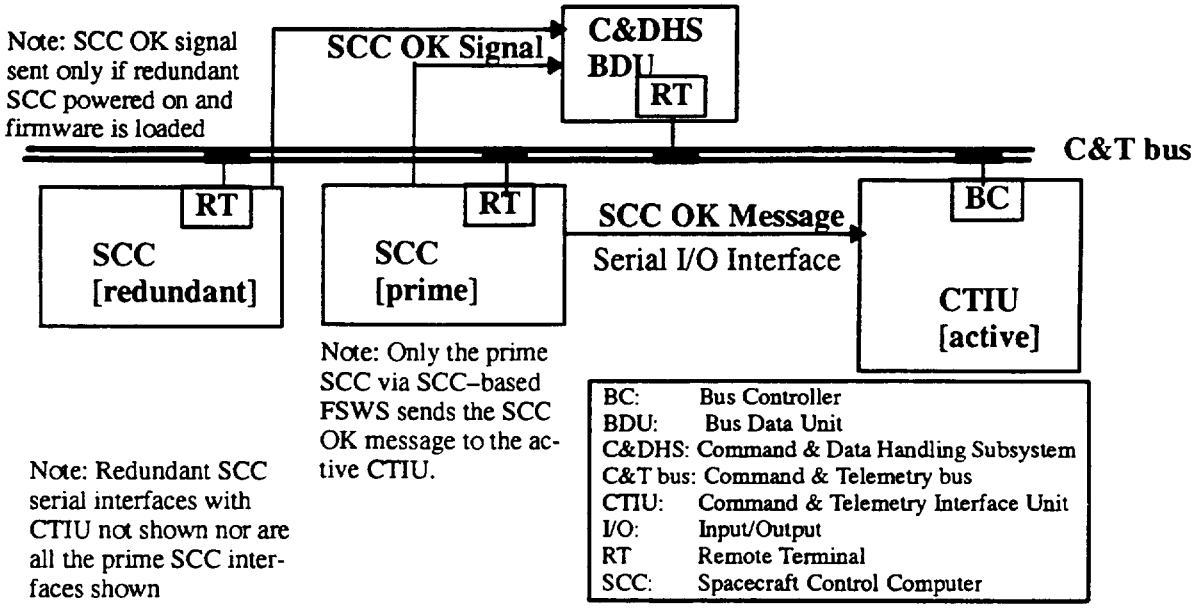

Figure 19. SCC OK Message and SCC OK Signal

[2] The optional "busy" and "service request" bits shall be supported.

[3] The remote terminal address shall be established through an external connector per MIL–STD 1553B Section 30.3.

[4] The broadcast mode of operation described in MIL–STD–1553B shall be prohibited.

[5] Only the MIL–STD–1553B mode codes listed in Table VI shall be utilized by the data busses and all other codes are illegal.

[6] In accordance with MIL–STD–1553B, each bus shall:

a. be dual redundant

b. be one string

c. support the full traffic load.

[7] One terminal address shall be reserved for the test port.

3.2.1.4.7.2 C&T Bus Characteristics

[1] The C&DHS shall communicate over a redundant serial data bus (the Command and Telemetry (C&T) bus), using the Digital Time Division Command/Response Multiplex Data Bus (MIL–STD–1553B) protocol with the:

a. C&DHS components with embedded RTs [standby CTIU, powered–on SCCs]

b. C&DHS components via BDU interfaces [SSR, SFE]

c. Spacecraft subsystems with embedded RTs [GN&Cs SSST, HGA]

Table VI. MIL–STD–1553B Mode Code Utilization

Transmit/ Receive Bit	Mode Code	Function	Associated Data Word
1	00010	Transmit status word	No
1	00001	Synchronize (see note 1)	No
1	00011	Initiate self–test	No
1	00100	Transmitter shutdown	No
1	00101	Override transmitter shutdown	No
1	00110	Inhibit terminal flag bit	No
1	00111	Override inhibit terminal flag bit	No
1	01000	Reset remote terminal	No
1	10000	Transmit vector word (see note 1)	Yes
0	10001	Synchronize (see note 2)	Yes
1	10010	Transmit last command	Yes
1	10011	Transmit BIT word	Yes

Notes:
1. Used on the Low Rate Science Data Bus only.
2. Used on the Command and Telemetry Bus only.

d. Spacecraft subsystems via BDU interfaces [GN&C, Reaction Wheel Assembly (RWA), DAS, PROP, Power & Battery, and Instruments]

e. Instruments with embedded RTs

f. Test port.

[2] Components connecting to the C&T bus shall be transformer coupled as shown in Figure 20.

[3] The C&T bus requirements shall be as specified in Section 5, 6, and 7 of the GIIS, GSFC 420–03–02 for the following:

a. electrical requirements

b. bus configuration, bus transfer method, mode code utilization, optional broadcast mode, data transfers to and from instruments, timing of data transfers, C&T bus protocols such as RT address assignment, 1553B message identification, and 1553B RT subaddress definition

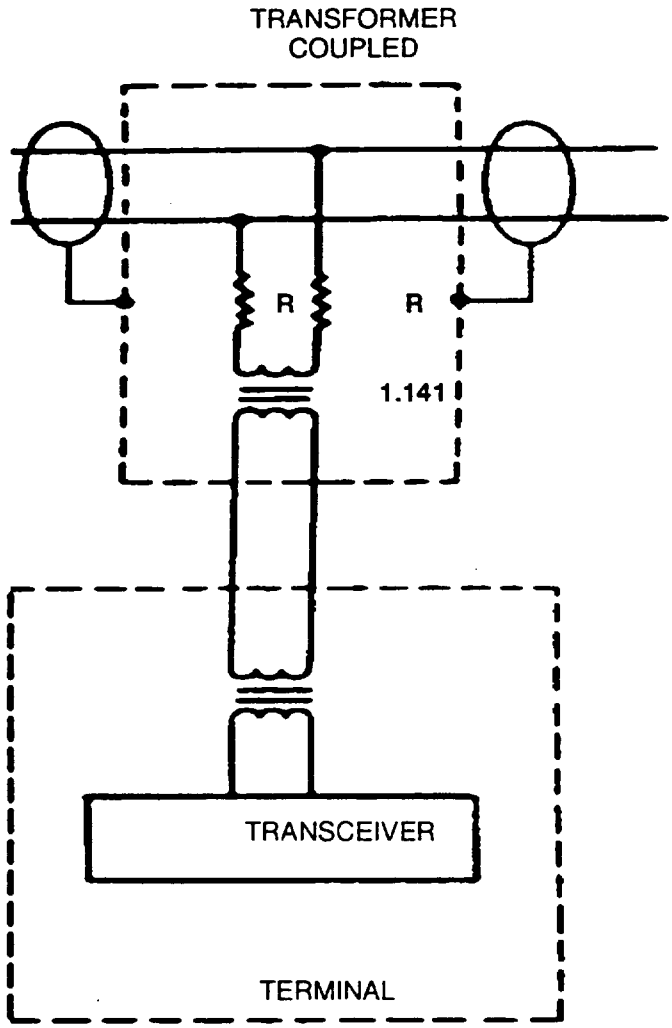

Suggested Part Types:
Dual Transceiver – Marconi CT252 or STC FC1553921
Data Bus Coupler – Raychem D–500–0355–121–03
Data Bus Cable Splice Kit – Raychem D–500–0137
Transformer – Technitrol SMQ1553–10
Data Bus Cable – Raychem 7724C8664
Data Bus Termination – Raychem D–500–0263–xxx

Figure 20. Standard Command and Telemetry 1553B Interface Circuit

c. command and data handling operational requirements.

3.2.1.4.7.3 Low–Rate Science Bus Characteristics

[1] The Low–Rate Science bus shall be compliant with MIL–STD–1553B Notice 2.

[2] The RTs on the LRS bus shall be assigned to:

a. low–rate science instruments

b. active CTIU

c. standby CTIU.

[3] The Low–Rate science bus requirements shall be as specified in Sections 5, 6, and 7 of the GIIS, GSFC 420–03–02 for the following:

a. electrical requirements

b. bus configuration, data transfer method, mode code utilization, data transfer protocol such as 1553B RT polling, data packet readiness, data packet length, single and multiple message packet transfer, and end of packet transfer handshake.

3.2.1.4.8 SSR Interfaces

3.2.1.4.8.1 SSR Record Science Data

[1] There shall be two interfaces, one per DCU.

[2] Only one of the two channels of record data received by the SSR from the SFE shall be active at any one time.

[3] Each interface shall consist of six lines: four data, one data clock and one data synch line.

[4] A data synch signal shall be supplied to the SSR's active controller to define the beginning of each CADU. See Figure 21.

[5] Data shall be received on the four data lines.

[6] Signal Definitions:

a. Quantity:	2 ports
b. Data Rate (each interface):	150 Mbps aggregate, or 37.5 Mbps per data line record
c. Data Stream Format:	NRZ–L (Data, Enable and Ready)
d. Clock frequency	37.5 Megahertz (MHz) record
e. Transmitter output:	0.595 V (min) differential Emitter Coupled Logic (ECL)
f. Receiver input:	0.31 V (min) differential ECL

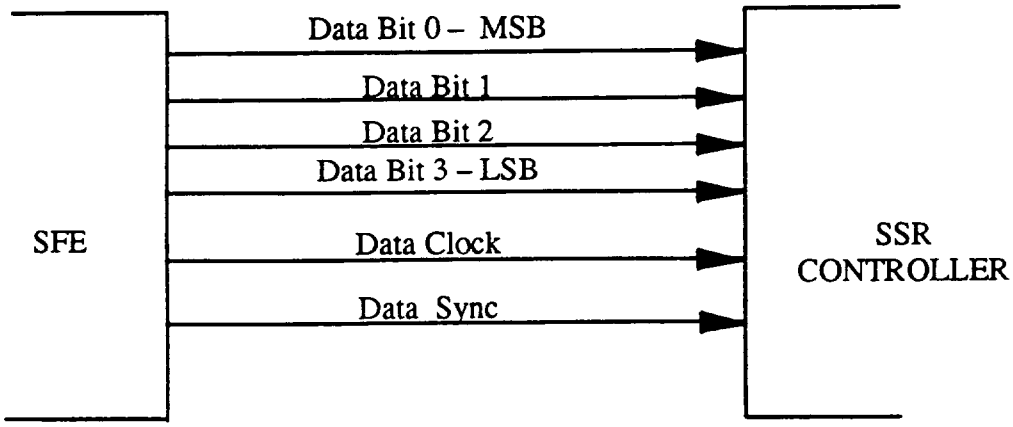

Figure 21. SSR Record Interface Signals

3.2.1.4.8.2 SSR Playback Science Data

[1] Each interface shall consist of six lines: four data, a received clock and a transmit clock.

[2] Only one channel of the two channels of playback data received by the SFE from the SSR shall be active at any one time.

[3] Each SSR port shall receive a reference clock from the SFE and supplies the 4–bits wide playback data with the sampling clock on the respective channel as shown in Figure 22.

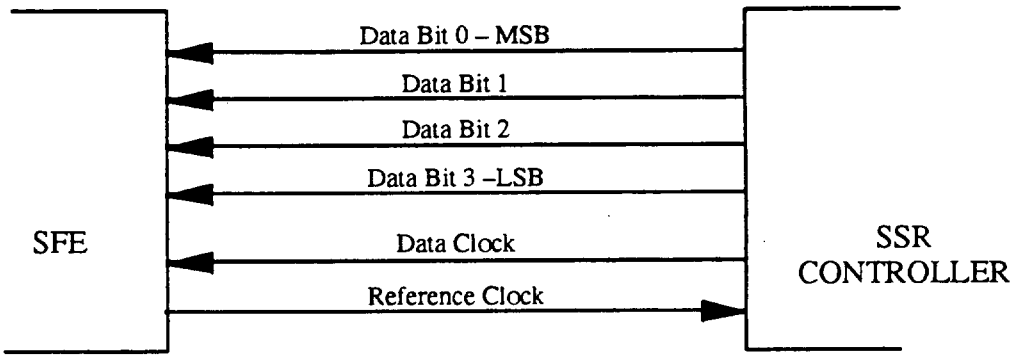

Figure 22. SSR Playback Interface Signals

[4] A playback session shall be initiated upon command.

[5] Signal Definitions:

a. Quantity: 2 ports

b. Data Rate (each interface): 0/105/150 Mbps aggregate playback

c. Data Stream Format: NRZ–L (Data, Enable and Ready)

d. Clock frequency 26.25 or 37.5 MHz playback

e. Transmitter output: 0.595V (min) differential ECL

f. Receiver input: 0.31 V (min) differential ECL

[6] Data shall be transmitted on the four data lines.

3.2.1.4.8.3 SSR Record H/K Telemetry

[1] Each interface shall consist of two lines: one data, a 1 times received clock .

[2] Data shall be received on the one data line.

[3] Signal definitions:

a. Quantity: 2 ports

b. Input Data Rates: 16 kbps

c. Data Stream Format: NRZ–L

d. Data Format: per DFCB, IS20008658

e. Receiver input: RS–422

3.2.1.4.8.4 SSR Playback H/K Telemetry

[1] Each interface shall consist of three lines: one data, 1 time and 2 times transmitted clock.

[2] Data shall be transmitted on the one data line.

[3] Signal definitions:

a. Quantity: 2 ports

b. Output Data Rates: 256 Kbps or 512 kbps

c. Data Stream Format: NRZ–L

d. Data Format: per DFCB, IS20008568

e. Transmitter output: RS–422

[4] The SSR shall simultaneously generate a 1–times and a 2–times playback clock synchronized to the output data at the 256 kbps playback rate and 512 kbps playback rate.

3.2.1.4.9 SFE Interfaces

[1] The SFE shall output two independent CADU streams to each of the redundant KSA and DAS type of modulators.

[2] The signal supplied on the two channels shall be internally cross–strapped within the SFE with their counter parts.

[3] Each of the ports shall consist of 4–bits wide data and the sampling clock as shown in Figure 23.

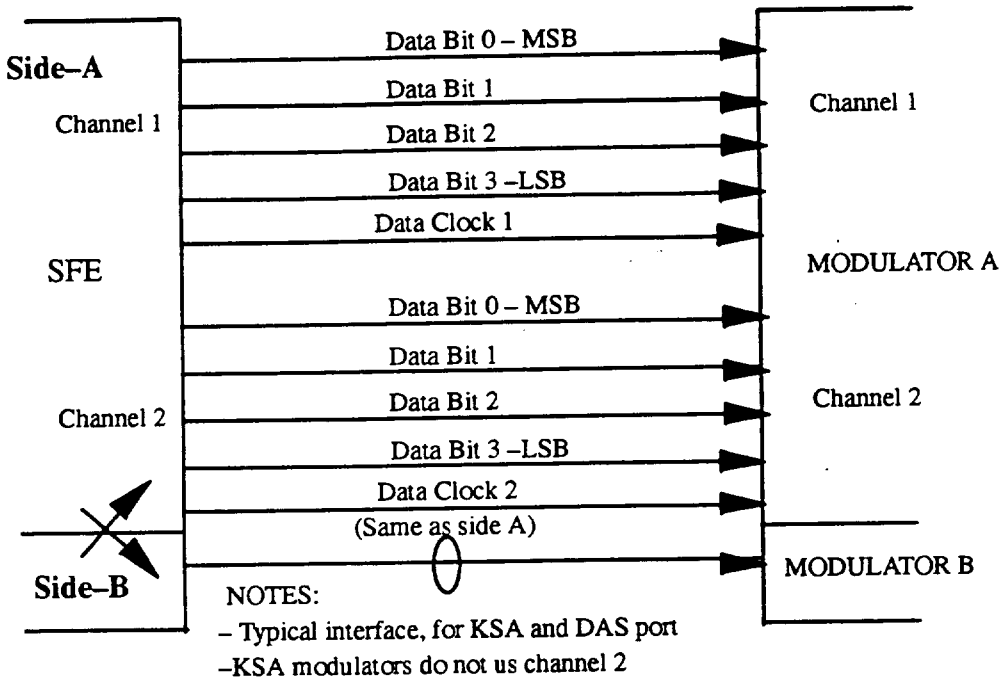

Figure 23. Modulator Interface Signals

[4] Only one set of the redundant signals shall be active at any given time.

[5] The KSA and DAS Modulators interface characteristics:

a. Data Rate (each interface): 150 Mbps max. total

b. Data Stream Format: NRZ–L

c. Clock frequency 37.5 MHz max.

d. Transmission Media: 100 ohm Twinax Cable

e. Electrical: 0.595V (min) differential ECL

3.2.1.4.10 Test Interfaces

The C&DHS shall have test ports as follows:

a. one on each C&T bus

b. one on each LRS bus

c. one on each TM&F bus.

3.2.1.5 H/K Telemetry Storage on the SSR

[1] The C&DHS shall retain in dedicated storage 384 Mbits of H/K telemetry which is stored for playback to the S–band transponder.

[2] The input record rate for housekeeping telemetry for storage shall be 16 kbps.

3.2.1.6 Bus Utilization

[1] The C&T Bus shall be operated in a cyclical fashion according to a fixed functional allocation of bandwidth, as shown in Figure 24.

[2] The C&DHS shall comply with the C&T bus transfer timing requirements specified in paragraph 6.1.2 and subparagraphs in the GIIS, GSFC 420–03–02, for the following:

a. minor cycle length

b. major cycle length

c. master cycle length

d. minor cycle task list

e. minor cycle task list completion

f. and the C&T bus task scheduling which encompasses, command transfers, memory load transfers, memory dump transfers, telemetry gathering transfers, SCC OK, ancillary data, time code data, and safe mode commands.

[3] A bus utilization table shall be maintained which indicates when to sample data, to gather the data, the data source, and the distribution of the data.

[4] The C&DHS firmware shall process the bus utilization table data without checking the correctness of the table entries.

[5] The bus utilization table shall be modifiable on–orbit.

[6] The bus bandwidth utilization shall not exceed 35% at PDR, 42.5% at CDR, and 50% at launch.

[7] The C&T bus shall have bandwidth reserved to accommodate a single retransmission of messages.

[8] The C&T bus minor cycle task list shall contain the minor cycle tasks appearing in Table VII.

[9] The minor cycle tasks shall be assigned to the message types as shown in Table VII.

[10] The relative order of minor cycle tasks shall be the relative order of the message types as shown in Table VII.

[11] The types of tasks within a minor cycle task shall be as shown in Table VII.

[12] The occurrence of different types of tasks within a minor cycle task shall be as shown in Table VII.

[13] The number of transactions allowed within a minor cycle for this type of task shall be as shown in Table VII.

Implies order within a minor cycle >

1 Major Cycle

Minor Cycle Number	Type #1	Type #2		Type #3		Type #4		Type #5	Reserve Bus Utilization
0	1	2	2	3	3	4	4	6	>50%
1	1	2	2	3	3	4	5	6	
2	1	2	2	3	3	4	4	6	
3	1	2	2	10	—	4	4	6	
4	1	2	2	3	3	4	4	6	
5	1	2	2	3	3	4	4	6	
. . .	. . .	. . .	. . .	. . .	. . .	. . .	. . .	. . .	
32	1	2	2	3	3	4	4	7	
33	1	2	2	3	3	4	5	7	
. . .	. . .	. . .	. . .	. . .	. . .	. . .	. . .	. . .	
64	1	2	2	3	3	4	4	8	
65	1	2	2	3	3	4	4	8	
. . .	. . .	. . .	. . .	. . .	. . .	. . .	. . .	. . .	
96	1	2	2	3	3	4	4	9	
97	1	2	2	3	3	4	4	9	
. . .	. . .	. . .	. . .	. . .	. . .	. . .	. . .	. . .	
126	1	2	2	3	3	4	4	.	
127	1	2	2	10	—	4	4	.	

***NOTE: Types are not meant to show timing, only relative order!**
minor cycle = 8 msec,
major cycle =128 minor cycles
master cycle = 64 major cycles

Minor Cycle Tasks

1. Synchronize with Data Word. One issued per minor cycle to an individual remote terminal. Each remote terminal receives 4 per major cycle.
2. BDU sample schedule. up to two per minor cycle
3. All onboard issued commands. In 4 minor cycles, 1–3 can contain up to 2 onboard commands while the 4th minor can contain only 1 ground controller command
4. Gathering request for H&S telemetry, H/K telemetry and SCC closed loop data.
5. Diagnostic – Memory Dump. Minimum interval between gathers is 6 minor cycles. Note: A C&T bus loop back will use this task type upon command to the CTIU as long as there is no on–going memory dump.
6. IMOK message. One per minor cycle.
7. Ancillary Data. One per minor cycle.
8. Time Code. One per minor cycle.
9. Safe Mode (as required).
10. Ground Controller Commanding: 1 command every 4 minor cycles

Figure 24. Command and Telemetry Bus Cycles

Table VII. Minor Cycle Tasks and Frequency of Occurrence

Message Type Number	Minor Cycle Tasks	Number of transactions allowed within a minor cycle for this type of task
1	Synchronize with data word	0 or 1
2	BDU sample schedule table	0, 1, or 2
3	Command: only one of the following types of task in any minor cycle task list	
	On–board commands every 3 out of 4 minor cycles	0, 1 or 2
	uplink command data transfer 1 out of 4 minor cycles	0 or 1
4	data gathering request: only one of the following type of tasks in any minor cycle task list	
	no sooner than every sixth minor cycle: dump gather request telemetry gather request	 0 or 1 0 or 1
	all other minor cycles: telemetry gather request	0, 1 or 2
5	Miscellaneous: only one of the following types of tasks in any minor cycle task list: ref. paragraph 6.1.2.4.6 of the GIIS, GSFC 420–03–02	
	Ancillary data packet	0 or 1
	Time Code Message	
	SCC OK/IMOK message	

[14] Only one transmission/re–transmission shall be allowed to the same RT address and RT subaddress in a minor cycle list.

[15] The RT subaddresses for:

a. commanding shall be as specified in Section 3 and 5 of the DFCB, IS20008658, for (1) sources and (2) real–time command structures which.

b. for (1) instrument command, (2) memory loads, (3) dump data, (4) ancillary data, (5) SCC OK/IM OK messages, (6) time code data, (7) safe mode commands issued by the CTIU, (8) loop back, (9) H/K telemetry, (10) H&S telemetry, and (11) mode codes shall be as specified in Section 6.1.4.2.1 of the GIIS, GSFC 420–03–02.

c. The BDU sample schedule table and BDU sampled data RT subaddresses shall be assigned as specified in Table VIII.

Table VIII. C&T RT Subaddress Assignments

Transmit/Receive bit = Receive		Transmit/Receive bit = Transmit	
3	BDU sample schedule table	3	BDU sampled data
		16	SCC Closed loop data

d. The SCC closed loop RT subaddress shall be assigned in accordance with Table VIII.

e. All remaining RT subaddresses shall be reserved.

3.2.1.6.1 Synchronize with Data Word

[1] The synchronize with data word shall be issued to each assigned C&T RT.

[2] The synchronize with data word shall be as specified in Section 6.1.2.4.1 of the GIIS, GSFC 430–03–02 for (1) number of occurrences within a minor cycle, (2) frequency sent to each RT, (3) timing, (4) data word content, (5) data word format and (6) instrument response to data word.

3.2.1.6.2 BDU Sample Schedule Table

[1] The BDU sample schedule tables shall be resident on–orbit.

[2] A BDU sample table shall be modifiable on–orbit.

a. Each BDU sample schedule table shall have as a prefix a 1553B command word where (a) the transmit/receive bit it set to receive, (b) the RT address is the designated recipient, (c) the RT subaddress = BDU sample table, and (d) the word count reflects the number of 1553B data words which are in the 1553B message

b. shall contain from 1 to 16 entries where each entry is 16–bits and conforms to the BDU telemetry control word as shown in Table IX.

c. shall sample serial, active/passive analog, or active/passive bi–level telemetry

Table IX. BDU Telemetry Control Word

Field Name	Definition
telemetry type	active analog active bi–level passive analog passive bi–level telemetry sync serial telemetry
end of telemetry table	
board address	
telemetry channel	

d. shall only have the End–of–Table (EOT) bit field set to EOT to indicate the last entry in this BDU sample schedule table

e. shall be transmitted to the BDU via the C&T bus in accordance with the bus utilization table.

[3] The C&DHS shall provide fill data for sampled data whenever the RT status word or BC indicates a problem.

3.2.1.6.3 Data Gathering Requests

[1] The bus utilization table shall ensure the gathering of instrument data shall be as specified in the UIID for that instrument.

[2] The bus utilization table shall ensure the gathering of Spacecraft subsystem data shall be as specified in the respective subsystem's specification.

[3] Each gather request in the bus utilization table shall be a 1553B command word where (a) the transmit/receive bit it set to transmit, (b) the RT address is the designated recipient, (c) the RT subaddress indicates type of gather request = (1) H/K telemetry, (2) H&S telemetry (also included in H/K telemetry), (3) SCC closed loop, (4) memory dump or (5) BDU sampled data, and (d) the word count reflects the number of 1553B data words to be returned by the RT.

[4] The bus utilization table shall reserve a place for possible dump gather requests as well as contain entries for all other gather requests.

3.2.1.6.3.1 BDU Telemetry Gathering Requests

[1] For BDU telemetry gathering request, the bus utilization table shall be organized to ensure the following:

a. Every gather request to a BDU shall be preceded by a BDU sample schedule table issued to that BDU in some prior minor cycle.

b. The soonest the BDU sampled data shall be gathered is minor cycle N+1 after a BDU sample schedule table has been sent in minor cycle N.

[2] The C&DHS shall perform the following scenario

a. In minor cycle N:
BDU sample telemetry schedule N to RT=BDU_A
BDU sample telemetry schedule N to RT=BDU_B

b. In minor cycle N+1:
BDU sample telemetry schedule N+1 to RT=BDU_A
BDU sample telemetry schedule N+1 to RT=BDU_B
Command to BDU
BDU gather request to RT=BDU_A to gather data sampled in minor cycle N
BDU gather request to RT=BDU_B to gather data sampled in minor cycle N

3.2.1.6.3.2 Gathering Requests for Spacecraft Equipment with Embedded RT

[1] For instruments and Spacecraft subsystems with embedded RTs. The data gathering window is defined to be a period of time where the data sampling is complete and the sampled data is stored in the appropriate RT subaddress awaiting a data gather request.

a. The data gather window shall be 3 consecutive minor cycles (24 msec) in length.

b. The bus utilization table shall send the data gather request to the recipient by the C&DHS during the data gathering window.

3.2.1.6.3.3 C&T Bus Loop Back

[1] The C&DHS shall transmit a C&T loop back using the message type reserved for a memory dump providing there is no memory dump operation active at the time.

[2] The C&DHS shall transmit a gather request to retrieve the loopback in the message type reserved for a memory dump providing there is no memory dump operation active at the time.

3.2.1.6.4 Commands

The command structures used on the C&T bus will be as specified in Section 5 of the DFCB, IS20008658, for (1) real–time serial commands, (2) real–time relay drive, and (3) logic pulse commands.

3.2.1.6.4.1 Commands to the BDU

A bus utilization table shall ensure the BDU will receive a command sent in minor cycle N prior to 7 msec from the start of the minor cycle.

3.2.1.6.5 Miscellaneous

[1] The bus utilization table shall conform to Section 6.1.2.4.6.1 of the GIIS, GSFC 420–03–02, for data transfer frequency for the following tasks:

a. an ancillary data packet

b. time code messages

c. SCC OK/IM OK messages

3.2.1.6.6 Additional Rules for Entries in Bus Utilization Table

Ancillary data transfer shall be mutually exclusive with a ground command message in any minor cycle task list.

3.2.1.7 Computing Resources

The C&DHS shall provide all computing devices required to provide memory storage and program execution services to FSWS.

3.2.1.7.1 Performance

3.2.1.7.1.1 SCC

[1] The SCC shall, as a minimum, provide the following computing resources to FSWS:

a. 1.61 MIPS instruction throughput

b. 1 M 16–bit word processor memory for programs and data.

[2] A single SCC shall meet all mission requirements specified herein.

[3] A second computer shall nominally be a cold standby.

[4] Each computer, when operating, shall provide internal health indications.

[5] The capability to perform memory dumps via the 1553B at the diagnostic rate specified in Table IV shall be provided.

3.2.1.7.2 High Order Language Support

[1] All C&DHS standardized computers shall have Ada compiler support.

[2] Where practical, firmware shall be developed in the Ada programming language.

[3] Where Ada is not used, another appropriate high–level programming language shall be used if practical.

[4] Firmware shall be developed using assembly language only where dictated by performance (i.e., speed) requirements or by the lack of an appropriate high–level language for the host processor.

3.2.1.7.3 Memory Error Control

3.2.1.7.3.1 SCC

The SCC processors shall use EDAC techniques, as necessary, to preserve the integrity of data which it processes and distributes.

3.2.1.7.3.2 CTIU

The CTIU processors shall use EDAC techniques, as necessary, to preserve the integrity of data which it processes and distributes.

3.2.1.8 Time Distribution and Synchronization Services

3.2.1.8.1 Master Spacecraft Clock

[1] The CTIU shall provide the master Spacecraft Clock to support time distribution and synchronization services.

[2] The Spacecraft Clock shall use the time code data epoch specified in 6.1.3.6 of the GIIS, GSFC 420–03–02.

[3] The Spacecraft Clock shall be monotonically increasing after power–up and reset are complete.

[4] The Spacecraft Clock tick shall represent a 1 μsec.

[5] The Spacecraft Clock shall maintain a continuous time reference derived from the frequency reference provided by the MO in COMS.

[6] Jumps in the time reference count shall occur only in response to the

a. set clock command

b. delta–time clock command.

[7] The clock set command shall be an absolute–time set command.

[8] Absolute–time set commands shall cause interruptions of less than 2 seconds to C&DHS provided services.

[9] Absolute–time set commands shall set:

a. to an accuracy of 1 μsec

b. to a resolution of 1 μsec.

[10] The execution of all absolute time set commands shall be coincident with the start of a major cycle.

[11] Delta–time set commands shall cause a maximum interruptions of 2 seconds time to C&DHS provided services.

[12] The execution of all delta time set commands shall be coincident with the start of a major cycle.

[13] The commanded clock adjustments shall have a resolution of 1 μsecond, a range of ±4 seconds or wider, and be executed with a precision of 1 microsecond.

[14] The leap second commands shall permit the Spacecraft Clock to add or delete one second at the end of the day.

[15] The leap second command shall appropriately modify the nominal roll–over value used by the C&DHS which is 86,399,999 milliseconds in the "millisecond of the day" field of the CCSDS Day Segmented time code.

a. The roll–over for a positive leap second command shall be 86,400,999 millisecond (hexadecimal 5265BFF).

b. The roll–over for a negative leap second command shall be 86,398,999 milliseconds (hexadecimal 5265817).

3.2.1.8.2 User Spacecraft Clock Calibration System Support

[1] The C&DHS shall support the NASA User Spacecraft Clock Calibration System (USCCS) by:

a. synchronizing the transmission of the S–band telemetry CADUs with the Spacecraft Clock and start of major cycle

b. providing in the telemetry stream the information needed for the ground controller to determine the Spacecraft Clock value at the receipt time of the first PN–code epoch on the S–band forward link following the start of the CADU transmission.

[2] The C&DHS shall accept the PN code epoch indication from the S–band transponder.

[3] The C&DHS shall measure the elapsed time between the time mark instant and the first occurrence of a PN code epoch to an accuracy of ± 1 microsecond.

[4] The C&DHS shall provide the data associated with the PN epoch:

a. in the H/K telemetry

b. and H&S telemetry.

3.2.1.8.3 Synchronization Service

[1] The C&DHS shall deliver "Synchronize with Data Word" mode code messages to all C&T bus users in accordance with paragraph 6.1.2.4.1 and subparagraphs of the GIIS, GSFC 420–03–02, for the transfer frequency, transfer time, data word content and data word format specified.

[2] The C&DHS shall maintain a minor and major cycle counts increments synchronously with the ticks of the Spacecraft clock which will be the source of the data word content of the "Synchronize with Data Word".

[3] The C&T bus cycle timing and the delivery of the Synchronize with Data Word messages shall be synchronous with the Spacecraft Clock with an accuracy of ± 50 microseconds.

3.2.1.8.4 Time Code Data Message

[1] The C&DHS shall generate, every 1.024 seconds, the Spacecraft Time Code Data Message as specified in paragraph 6.1.3.6 and subparagraphs of the GIIS, GSFC 420–03–02, and as specified in the DFCB, IS20008658.

[2] The Spacecraft Time Code Data messages shall be delivered between 100 to 900 milliseconds after the prior time mark instant.

3.2.1.8.5 Time Mark and Frequency Bus

[1] The C&DHS shall generate the following precise timing signals to be distributed on the TM&F bus in accordance with the GIIS, GSFC 420–03–02, (1) 1.000 MHz square wave frequency reference derived directly from the MO frequency in COMS and (2) a periodic time mark encoded on a duty cycle variation of two successive cycles of the square wave.

[2] The Time Mark shall be within 6 microseconds of the Time Mark Epoch at all receivers.

[3] The C&DHS shall support any number of TM&F users up to 6.

[4] The C&DHS shall have one or two TM&F bus drivers active at any one time.

3.2.1.8.6 Standard Time Services

[1] The C&DHS shall provide standard time services to Spacecraft equipment by providing a time code data message and a synchronize with data word.

[2] These services shall be available in all Spacecraft modes and mission phases.

[3] These services shall be restorable by ground controller command after any single failure.

3.2.1.8.7 Precise Time Services

[1] The C&DHS shall provide Precise Time services in accordance with (a) paragraph 5.4.3 and subparagraphs for reference frequency electrical characteristics, and time mark accuracy and (b) paragraph 6.2 and subparagraphs for time mark and frequency bus, time code data valid indication, and time information timing of the GIIS, GSFC 420–03–02. This service includes transmitting a time code data message on the C&T bus and a time mark on the TM&F bus.

[2] These services shall:

a. be available in any Spacecraft modes and mission phases during which the GN&CS TDRSS On–board Navigation System (TONS) navigation function is active.

b. be restorable by ground controller command after any single failure.

3.2.1.8.7.1 Doppler Measurement

[1] The C&DHS shall generate and deliver a periodic logic–level "Doppler Initiate Signal" signal to the COMS via a serial link between the CTIU and the S–band transponder.

[2] The "Doppler Initiate Signal" shall be coincident with the time–mark being sent to the TM&F bus within an accuracy of 3 microseconds.

[3] The C&DHS shall supply a serial link to the S–band transponder for the acquisition of the Doppler measurement data.

[4] The C&DHS shall supply the Doppler measurement data to the SCC–based FSWS.

[5] Electrical characteristics of the Doppler Initiate Signal shall comply with Section 3 of the GIS, IS20008501.

[6] The C&DHS shall provide time tagging of the "end of Doppler integration period."

3.2.1.9 Science Data Handling

[1] The C&DHS shall comply with the standard data handling interfaces, data handling operational requirements, and data formats requirements with instruments as specified in Sections 5, 6, and 7 in the GIIS, GSFC 420–03–02 (a) for low–rate science interfaces, (b) for time mark and frequency bus interfaces, and (c) for high–rate science interfaces.

[2] The C&DHS shall accept data packets from the instrument set at any peak aggregate data rate up to the sum of the individual peak rates allocated in the UIIDs over the (a) low–rate science bus, and (b) the high–rate science interface.

[3] The SFE shall accept packetized data from each of the HRDLs at a burst data rate specified in Section 5 of the GIIS, GFSC–420–03–02, as measured after the 4B/5B decoding process with a maximum aggregate burst data rate of 130 Mbps.

[4] The C&DHS shall format and multiplex the science data stream for transmission to the EOSDIS as specified in the DFCB, IS20008658. Figure 25 depicts the C&DH science data handling architecture.

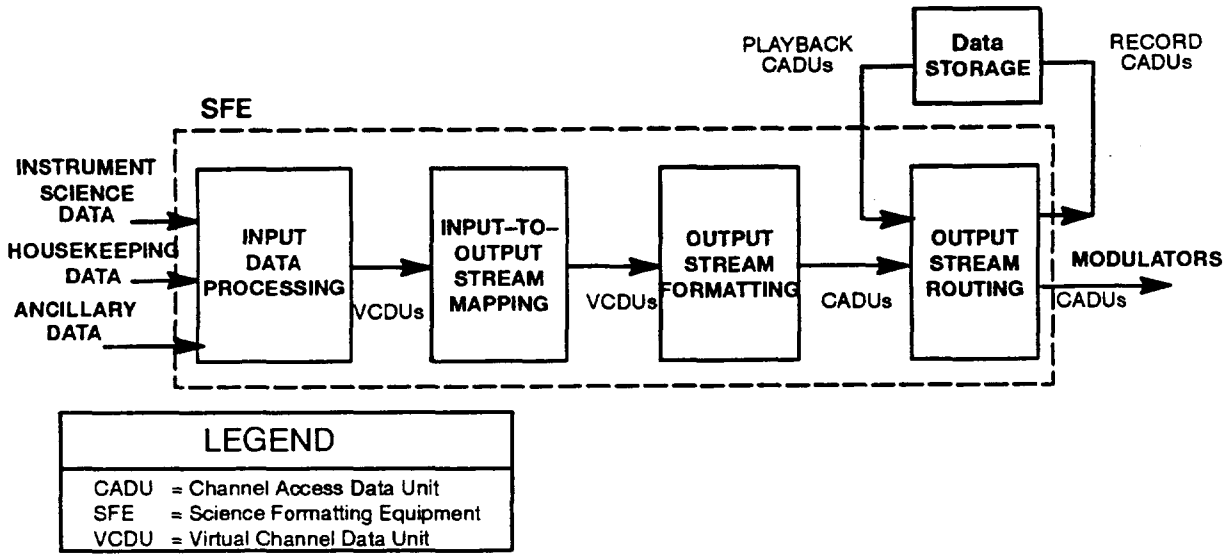

Figure 25. Top–Level C&DH Science Data Handling Architecture Block Diagram

[5] No single fault shall prevent the capability of the C&DHS to transmit telemetry to the Ku–band or X–band interface.

[6] The C&DHS shall store all real–time multiplexed instrument data on command.

[7] Stored science data shall be available for transmission within one orbit of acquisition.

[8] On the Ku–band, a selected set of instrument data shall be capable of real–time transmission to ground operations while transmitting previously stored instrument data.

[9] The C&DHS architecture shall support data formatting and encoding functions operating at rates consistent with the Ku– and X–band return link data rates.

[10] The C&DHS shall on command forward multiplexed real–time H/K telemetry and/or stored instrument data to the COMS for Ku–band downlink transmission.

[11] The C&DHS shall on command forward one or two sets of selected real–time instrument data to the COMS X–band downlink DAS.

[12] The ancillary data packet shall be:

a. treated as part of the LRS data stream

b. capable of being delivered to the Ku–band and DAS modulators in real–time

c. identical whether transmitted to either the Ku–band or DAS modulators.

[13] The H/K telemetry packets shall be:

a. treated as part of the LRS data stream

b. capable of being delivered simultaneously to the Ku–band and DAS modulators in real–time.

[14] Alternatively, and exclusive of the Ku–band interface and real–time data, the C&DHS shall, on command, forward stored instrument data to the DAS.

[15] The C&DHS shall allow the commanded selection/deselection of individual high–rate and low–rate instrument data sources for processing.

[16] The C&DHS shall transport data packets from instruments without sensitivity to the content of the data transported.

[17] The C&DHS shall receive a single set of instrument data for the several data destinations.

[18] The C&DHS design shall not cause the loss of science data other than as caused by single event phenomena or the BER of the system.

[19] The C&DHS contribution to the end–to–end Bit Error Rate (BER) for science data delivery to the COMS shall not exceed 10^{-8}.

[20] The SFE shall, as a standard service, apply FEC coding to the data received from the LRS bus and from each HRDL.

[21] The undetected BER contribution of the SFE shall be less than or equal to 1×10^{-12}.

3.2.1.9.1 Data Transport Service

The following data transport services shall be as specified in the DFCB, IS2008658 (a) the format of Standard Service transfer frames, (b) the format for the Primary Header field, (c) the frame length, (d) grade of service, and (e) the parity field resulting from the implementation of Reed–Solomon code.

3.2.1.9.1.1 Instrument Interface Configuration

The C&DHS architecture shall accommodate the selection, prior to Spacecraft integration, of different virtual channel and instrument configurations on the space–to–ground and space–to–space links.

3.2.1.9.2 Capacity

[1] The C&DHS shall accept CCSDS Version–1 source packets from instruments via multiple interfaces at:

a. a peak aggregate data rate up to 125 Mbps,

[2] The C&DHS shall allow the reallocation of data handling capacity among instruments in response to changing instrument operational configurations.

3.2.1.9.3 Low–Rate Data Handling

[1] The C&DHS shall be configured to accept data from at least 6 low–rate sources.

[2] The C&DHS shall accept packetized data from the low–rate instruments and active CTIU in accordance with Sections 6 and 7 of the GIIS, GSFC 420–03–02.

[3] The aggregate of all data received through the LRS bus shall be multiplexed together and allocated to one downlink virtual channel.

[4] The Virtual Channel Identification (VCID) assignment shall be as specified in the DFCB, IS20008658.

3.2.1.9.3.1 Data Rates

[1] The C&DHS shall accept data through the LRS bus at any aggregate (i.e., all active sources together) rate up to 200 kbps.

[2] The C&DHS shall be designed to accept data from any individual low–rate source as specified in GIIS 6.3.5.7.2.

3.2.1.9.3.2 Packet Sizes

The C&DHS shall accept variable–length packets through the Low–Rate Science Bus from a minimum of 512 (ancillary data packet) to a maximum length as specified in paragraph 6.3.5.8.1 of the GIIS, GSFC 420–03–02.

3.2.1.9.3.3 Low–Rate Science Bus

[1] The Low–Rate Science Bus shall be designed to meet the specifications of Sections 6.3.1 through 6.3.5 and subparagraphs for interface configuration, broadcast mode, data transfer timing, data bus data format, data bus transfer protocol, data packet transfer and polling rate in GIIS, GSFC 420–03–02.

[2] The electrical and protocol interface requirements for all nodes on the bus shall comply with Section 5 in the GIIS, GSFC 420–03–02.

[3] The bus address assignments shall be as specified in Table X.

Table X. LRS Science Bus Address Assignment

Remote Terminal Address	Address
CTIU–1	01
CTIU–2	02
MOPITT	03
CERES–FORE	04
CERES–AFT	05
Test	06

[4] The polling sequence shall be capable of redefinition via ground controller command.

[5] Each active node in the sequence shall be polled for its readiness to transport a complete source packet.

[6] When a node is ready, full bus bandwidth shall be given to the data source for the length of time required to transport the complete packet.

[7] The C&DHS shall implement retransmission of each message on failure of first transmission.

[8] At the end of a packet transfer, the BC shall send an End–of–Transmission message to allow the buffer to be reused.

3.2.1.9.4 High–Rate Data Handling

[1] The C&DHS shall provide multiple HRDL electrical data links for transporting instrument science data to the C&DHS, as specified in Sections 5 and 6 in the GIIS, GSFC 420–03–02.

[2] The number of high–rate data interfaces provided shall be commensurate with the requirements of the mission instrument set.

[3] The configuration shall provide 6 high–rate interfaces in accordance with UIIDs.

[4] The C&DHS shall accept packetized data from the high–rate instruments in accordance with Sections 6 and 7 of GIIS, GSFC 420–03–02.

[5] The data source for each of the HRDL links shall be allocated a dedicated downlink virtual channel.

[6] The VCID assignments shall be as specified in the DFCB, IS20008658.

3.2.1.9.4.1 Data Rates

[1] The data rates shall be as specified in Section 6.4 of the GIIS, GSFC–420–03–02.

3.2.1.9.4.2 Packet Sizes

[1] The C&DHS shall provide the capability of accepting variable–length source packets through the high–rate interfaces as specified in paragraph 6.4.2.1 of the GIIS, GSFC 420–03–02.

[2] The packet size on a single interface shall as specified in the GIIS Table 6–7.

3.2.1.9.4.3 High Rate Data Link

[1] Each HRDL link shall support a continuous input data rate of 50 Mbps.

[2] The C&DHS shall accept CCSDS Version–1 source packets from instruments via multiple interfaces at a peak aggregate data rate up to 150 Mbps (i.e., all CADU overhead included).

[3] The C&DHS shall:

a. Permit the operation of instruments independently of each other within the total instrument resource limits described herein

b. Allow the reallocation of data handling capacity among instruments in response to changing instrument operational configurations.

[4] Information shall be contained in the transmitted data to indicate the beginning of a packet and the end of a packet.

[5] Encoding shall be used to embed clock information on the data stream to form a self–clocking transmission.

[6] The HRDL bit rate shall be 63.5 Mbps.

[7] The electrical and protocol characteristics of the HRDL links shall be as specified in the GIIS, GSFC 420–03–02.

3.2.1.9.5 Science Data Storage

[1] The C&DHS shall store at least 140 Gbit (140 x 10^9 bits) of formatted instrument data for later transmission.

[2] The science data storage data buffer sizes shall be capable of being configured.

[3] The science data storage data buffers shall be allocated based on Virtual Channel Identification VCID).

3.2.1.9.6 Downlink Data

[1] The C&DHS shall, based upon configuration commands, forward streams of synchronous data to the COMS for downlink.

[2] Each data stream shall represent a Physical Channel Access Protocol Data Unit (PCA–PDU) as defined in Section 6 of the DFCB, IS20008568.

[3] Each VCID data stream shall select for multiple destinations, e.g., record, DB, and DDL.

[4] The C&DHS shall provide data streams consistent with Table XI.

Table XI. Science Data Links

Downlink Configuration	Data Type		Data Rate		Usage
	Chan 1	Chan 2	Chan 1	Chan 2	
KSA	P/B		150 Mbps		Playback Science Data Downlink
KSA	R/T		150 Mbps		Real–time Science Data Downlink
DAS	R/T		12.5 Mbps		Real–Time Direct Broadcast (DB)
DAS		P/B	150 Mbps		Direct Playback (DP1)
DAS	R/T	P/B	12.5 Mbps	105 Mbps	Real–Time DB & DP2
DAS	R/T	R/T	12.5 Mbps	105 Mbps	Real–Time DB and Direct Downlink (DDL)
R/T Real–Time P/B Recorder Playback					

[5] When insufficient data is available to fill up the real–time link bandwidth, the C&DHS shall be responsible for inserting fill transfer frames into the data streams.

[6] The C&DHS shall minimize the amount of fill data added to this stream to the extent practical.

[7] The playback data stream shall maintain a continuous bit clock with valid transfer frames or a binary fill pattern of "1101".

3.2.1.10 GN&CS Safe Mode Support

3.2.1.10.1 Handover

[1] The C&DHS shall support GN&CS safe mode by accepting and delivering command data transfers containing safe–mode commands.

[2] Upon the receipt of an SCC OK message from the SCC, the C&DHS shall generate and distribute:

a. Serial commands representing IM OK message as specified in paragraph 6.1.3.1.4 of the GIIS,GSFC 420–03–02, to each designated recipient per the bus utilization table.

b. The C&DHS shall accept, decode, distribute and deliver a SCC–based FSWS command data transfer containing the logic level pulse command for the IMOK:

1. to the Attitude Control Electronics (ACE)

2. to the Power Distribution Unit (PDU).

[3] The C&DHS shall continue to gather telemetry.

[4] The C&DHS shall continue to gather and distribute science data as long as the C&DHS is so configured.

3.2.1.10.2 C&DHS Safe Mode Commanding

[1] Upon command the C&DHS shall generate and distribute C&DHS safe–mode command message to designated recipients per the bus utilization table.

a. Safe–mode command structure and safe–mode command for Spacecraft equipment with an embedded RT shall be as specified in Paragraph 6.1.3.1.3 and paragraph 7.2.2.3.3, respectively, in the GIIS, GSFC 420–03–02.

b. A logic level pulse safe–mode command shall be sent to the ACE and to the PDU.

3.2.1.10.3 Operational Constraints

Only a ground controller command will be used to exit from safe–mode.

3.2.1.11 Failure Tolerance

[1] The C&DHS shall perform the functions specified herein after any single hard failure.

[2] The C&DHS redundant functional paths shall be separated or protected such that no single event will cause loss of both paths.

[3] No single failure shall cause other failures.

[4] The C&DHS shall allow the Spacecraft to be reconfigured to full operation via ground commanding in the event of a single on–board failure or a single command error.

[5] The C&DHS shall monitor the operation of its hardware and software components in order to detect anomalous conditions which may indicate time–critical component failures.

[6] All such sensed failures shall be reported to the ground via housekeeping telemetry.

[7] For failure mode and criticality effects analysis purposes, Electrical Accommodations Subsystem (EAS) failures shall be treated as C&DHS failures when C&DHS services are interrupted.

[8] When a failure occurs after which continued Spacecraft operation may threaten survival, the C&DHS shall allow the Spacecraft to transition to a predefined safe operating mode.

3.2.1.11.1 Back–up Memory

The C&DHS shall maintain all computer memory loads which are critical to Spacecraft survival in non–volatile storage for use in initiation or restoration of operations after anomalies.

3.2.1.12 Serviceability

The C&DHS shall be designed for servicing during integration and test.

3.2.1.13 Growth

The C&DHS architecture shall incorporate functional modularity where practical such that performance and functionality growth may be realized via the incorporation of hardware and technology upgrades to individual modules.

3.2.1.14 Orbit–Averaged Power

The C&DHS, over a period of one orbit, shall draw power within the bounds given in Table XII.

3.2.2 C&DHS Operational Modes

[1] The C&DHS shall accept, decode and execute commands which reconfigure the C&DHS to support Spacecraft mode transitions.

[2] The C&DHS operational modes are (a) ground test, (b) survival, (c) standby and (d) science as shown in Figure 26. The transition between C&DHS operational modes shall be as depicted in the state diagram in Figure 26.

[3] The C&DHS operational modes shall map to all the Spacecraft operational modes as depicted in Table XIII.

Table XII. Orbit Average Power

	Spacecraft Mode								
	Ground Test Mode	Survival Mode	Delta-V Mode		Standby Mode	Science Mode		Safe Mode	
			(min)	(max)		(min)	(max)	(min)	(max)
Power (Watts)	211	211	211	360	373	360	435	211	360

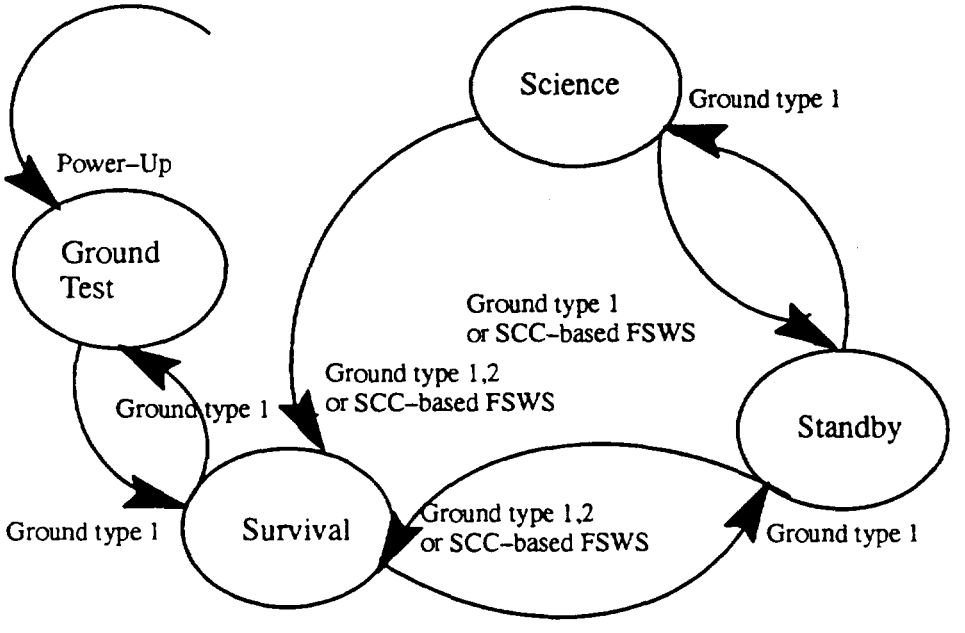

Ground type 1	one or more C&DHS commands which impact configuration and operation
Ground type 2	a single command to the SCC which invokes the appropriate C&DHS stored command sequence
SCC-based FSWS	SCC-based FSWS monitors events and invokes the appropriate C&DHS stored command sequence upon occurrence. This autonomous invokation can be enabled/disabled by ground command

Figure 26. C&DHS Operational Mode Changes

Table XIII. Subsystem Operational Modes vs Spacecraft Operational Modes

	Spacecraft Mode						
C&DH Subsystem Mode	**Ground Test**	**Launch**	**Survival**	**Stand-by**	**Delta-V**	**Science**	**Safe**
Ground Test	x						
Survival		x	x		x		x
Standby				x	x		x
Science					x	x	x

[4] The C&DHS operational modes and the power state of the C&DHS components shall be as shown in Table XIV.

Table XIV. Subsystem Operational Modes vs C&DH Component Power State

	C&DHS Components ON: powered on OFF: powered off DC: don't care					
Subsystem Mode	**CTIU**	**BDU**	**SCC**	**SFE**	**SSR low**	**SSR high**
Ground Test	on	on	on	off	off	off
Survival	on	on	on	off	on	off
Standby	on	on	on	dc	on	dc
Science	on	on	on	on	on	on

3.2.3 CTIU Services Available in Any C&DHS Operational Mode

[1] While in any C&DHS operating mode, the C&DHS shall provide the following services:

a. the uplink command data transfer reception from the S-band transponders and command data transfer distribution

b. the SCC-based FSWS command data transfer reception from the high speed serial I/O interface and command data transfer distribution

c. the periodic sampling, gathering and formatting of H/K telemetry for distribution (1) to the S-band transponder or hardline (umbilical) and (2) to the SCC-based FSWS

d. the periodic sampling, gathering and formatting of H&S telemetry for distribution (a) to the S-band transponder or hardline (LV port)

e. the periodic gathering and formatting of diagnostic telemetry for distribution to the S-band transponder or hardline (umbilical)

f. the periodic sampling, gathering and formatting of SCC closed loop data for distribution to the SCC–based FSWS

g. the periodic transmission of the time mark on the TM&F bus to designated recipients

h. Standard time service

i. Synchronization service

j. providing the processing and software resources required for the execution and storage of the programs and data belonging to the onboard subsystems

k. the input and output of data from or to Spacecraft element's sensors and effectors, including appropriate signal conditioning and conversion of signals between the analog and digital domains

l. accepting the SCC–based FSWS prepared and formatted ancillary data packet contained in a command data transfer, then replicating and delivering the ancillary data message to the onboard Instruments and transmitting it to the ground system

m. the onboard communication of digital data among the distributed hardware and software components of Spacecraft subsystems and between Spacecraft subsystems and Instruments

n. the C&DHS components shall accept, decode and execute C&DHS commands upon receipt.

3.2.3.1 C&DHS Ground Test Mode

[1] The C&DHS shall require standard synchronization services to be available before transitioning to a higher state.

[2] Science data gathering, storage and delivery to the COMS high–rate links shall not be available.

[3] The recording of H/K telemetry shall not be available.

3.2.3.1.1 Operational Equipment

[1] The nominal level of C&DHS operational components needed to fully support the C&DHS ground control test mode shall be the active SCC, the active CTIU, and prime BDUs.

[2] The C&DHS shall not provide autonomous reconfiguration of C&DHS components to support a power–up ground control test mode.

3.2.3.2 C&DHS Survival Mode

[1] The survival mode shall be the lowest on–orbit power state of the C&DHS.

[2] The minimum C&DHS survival mode shall be defined as (a) H/K telemetry will be capable of being recorded on the SSR during this operational mode, and (b) the recorded SSR data will be capable of playback.

[3] Science data gathering, storage and transmission to the COMS links shall not be available.

3.2.3.2.1 Operational Equipment

[1] The minimum C&DHS operational components needed to support the C&DHS survival operational mode shall be the active SCC, the active CTIU, and prime BDUs, the SSR, at low–power state, capable of recording and playing back the H/K telemetry.

3.2.3.3 C&DHS Standby Operational Mode

[1] The C&DHS standby operational mode shall be available for quiescent periods and C&DHS checkout.

[2] While in standby mode, the C&DHS shall support diagnostic operations for Spacecraft checkout by performing status checks.

[3] The minimum C&DHS standby mode shall be defined as (a) recording H/K telemetry on the SSR, (b) playback of the recorded SSR data, (c) simultaneously recording to the SSR while playing back from the SSR, (d) standard time services are available, (e) real–time H/K telemetry will be configured to be delivered to the SCC–based FSWS and (f) real–time H/K telemetry delivered to the S–band transponder, if commanded.

[4] The C&DHS shall require that precise time services be available to transition to a higher state.

3.2.3.3.1 Operational Equipment

[1] To support the nominal C&DHS standby operational mode, the following C&DHS components shall be operational: active SCC, the active and standby CTIUs, prime BDUs, and SSR capable of storing and playing back H/K telemetry only as well the SSR be capable of recording and playing back both science and H/K telemetry.

[2] This C&DHS operational mode shall permit the following equipment scenarios:

a. Nominally, only one SCC will be operational, but the C&DHS design will permit both SCCs in a powered state although only one will be active.

b. Only one CTIU shall nominally be in an active state.

c. The SFE and SSR will be operational to support the check out of the collection, formatting, multiplexing, and recording of the multiple streams of packetized Instrument science data.

3.2.3.4 C&DHS Science Operational Mode

[1] While in the science operational mode the C&DHS shall collect, format, multiplex, and record the multiple streams of packetized Instrument science data.

[2] The minimum C&DHS science operational mode shall be defined as (a) H/K telemetry is recorded on the SSR for later playback to the S–band transponders, (b) real–time H/K telemetry delivered to the S–band transponder, if commanded (c) real–time H/K telemetry configured to be delivered to the SCC–based FSWS, (d) H/K telemetry delivered for inclusion in the low–rate science data stream (e) SCC closed loop data delivered to the

SCC–based FSWS, (f) H&S telemetry delivered to S–band transponder, if commanded, (g) autonomous function is enabled to generate and deliver the C&DHS issued safe mode command, (h) autonomous function is enabled to replicate and deliver the ancillary data packet, (h) recorded low–rate and high–rate science data configure to be delivered to Ku band or DAS modulators, (i) standard time services are available, and (m) precise time services are available.

[3] In addition to the minimum level of operations in science mode, the C&DHS science mode shall supply real–time science data to the Ku–band, DDL and DB equipments while recording science data with data source mapping to downlink streams performed as required.

[4] The C&DHS science mode shall support the SSR capability of recording and playing back science data as well as recording and playing back H/K telemetry upon command.

3.2.3.4.1 Operational Equipment

To support the nominal C&DHS science operational mode, the following C&DHS components shall be operational: active SCC, the active and standby CTIU, and prime BDUs, SSR capable of supporting both H/K telemetry and science operations and the SFE.

3.2.3.5 C&DHS Initialization

During Spacecraft power–up, the only required C&DHS powered components are the CTIUs.

3.2.4 Physical Characteristics

3.2.4.1 Mass

[1] The mass of the C&DHS shall not exceed 945 lbs.

[2] The center–of–mass, products of inertia, and mass estimate accuracies shall be as defined in the mechanical portion of IS20008501.

3.2.4.2 Durability

[1] The C&DHS shall be made up only of materials and components capable of withstanding environmental conditions specified in IS20008501 for 5 years without evidence of damage

[2] The C&DHS shall also withstand, without evidence of physical damage, any wear due to the functioning of the system.

[3] Damage shall be considered to be any change in the C&DHS or components which may degrade subsystem performance to levels below those specified herein.

[4] The C&DHS shall meet all operational requirements as specified herein, in the environments specified in 3.2.7 for the duration of 5 years on orbit.

[5] Materials selection and documentation shall comply with the requirements of GSFC 420–05–02, Performance Assurance Requirements for EOS Observatories.

3.2.4.3 Maintainability Impact on Design

To the extent practical, the C&DHS shall facilitate maintenance by being functionally, mechanically, and electrically independent from all other Spacecraft equipment.

3.2.5 Power Characteristics

[1] The subsystem shall operate per the performance requirements specified herein when supplied power as specified in Section 3 of IS20008501.

[2] The under voltage condition shall exist when the input bus voltage goes under 58 V ±5%(**TBR–2**).

[3] An overvoltage condition shall exist when the input bus voltage goes over 132 V ±5%

3.2.6 Reliability

[1] The minimum capability required for C&DHS mission success shall be defined as the capability of providing the Instruments with the minimum resources and services specified herein for the mission life.

[2] The ability to transmit all recorded science data to the COMS's Ku–band TDRSS or X–band DAS modulators shall be considered the minimum science transmission capability required for success.

[3] The probability of mission success (P_S) for the C&DHS shall be at least 0.843 (**TBR–3**) for a five–year mission life.

3.2.6.1 Storage Restrictions

Limited–life components which may require change–out during storage shall be identified and tracked in the Critical Items List, 20008652.

3.2.6.2 Failure Propagation Restrictions

No single failure shall cause:

[1] The C&DHS shall ensure, to the extent practical, that no Instrument or component failures may propagate failures to other C&DHS components.

[2] The C&DHS shall, on command, enable or disable acceptance of science data from an Instrument which impacts the gathering of other Instrument data due an Instrument malfunction.

3.2.6.3 Redundancy Management

[1] The C&DHS shall accept and execute commands to reconfigure the C&DHS as necessary to support subsystem redundancy management.

3.2.7 Environmental Conditions

[1] The C&DHS components shall remain undamaged during, and following exposure to the protoflight environmental test levels corresponding to the ambient environments defined in Section 6 of the GIS, IS20008501.

[2] The C&DHS and its components shall remain undamaged during, and following exposure to the acceptance environmental test levels corresponding to the ambient environments as defined in Section 6 of the GIS, IS20008501.

[3] Test levels shall be as defined in the Verification Specification, PS20005404.

[4] Damage shall be as defined in Section 3.2.4.2.

3.2.7.1 Storage, Integration and Test

The C&DHS shall be capable of being held for testing or storage for the period defined in Section 6 of the GIS, IS20008501, under the storage conditions stated there for [1] thermal, [2] contamination, [3] humidity, and [4] electromagnetic interference (EMI), without suffering any damage as defined above.

3.2.7.2 Shipment

The C&DHS shall comply with the following transportation environmental requirements as defined in IS20008501 Section 6: [1] thermal, [2] contamination, [3] humidity, [4] EMI, [5] loads, and [6] shock. The Spacecraft is assumed to be horizontal for all flight transportation and either horizontal or vertical for all ground vehicle transportation.

3.2.7.3 Launch

The C&DHS shall comply with the following launch environmental requirements as defined in IS20008501 Section 6: [1] thermal, [2] contamination, [3] Radiated RF, [4] EMI, [5] loads, [6] shock, and [7] pressure [8] acoustic vibration, [9] lightning, and [10] cosmic ray.

3.2.7.4 Critical Pressure Operation

Any C&DHS components operating during launch and using +120 Vdc input power, as specified in Section 3.4, shall be designed with appropriate techniques to permit proper operation through the critical pressure region of ascent.

3.2.7.5 On–orbit

The C&DHS shall comply with the following on–orbit environmental requirements as defined in IS20008501 Sections 5 and 6: [1] thermal, [2] contamination, [3] pressure, [4] EMI, [5] loads, [6] shock, [7] orbital debris, [8] micrometeoroids, [9] vibration, [10] charged particle, [11] atomic Oxygen, [12] magnetic, and [13] electro–static discharge.

3.2.7.5.1 Single Event Upset

The C&DHS shall be designed using parts that are immune to Single Event Upsets wherever possible. An SEU–induced change of state that causes failure of the component shall be included in the reliability analysis. An SEU–induced change of state in a component shall not cause failure of other Spacecraft components.

3.2.7.5.2 Single Event Latchup

[1] C&DHS components shall be designed using parts that are immune to latchup, secondary breakdown, other thermal runaway effects, and snap–back induced by cosmic ray ions.

[2] If immunity is not possible, components shall be protected through the use of appropriate current limiting, latchup detection, and recovery circuitry.

3.2.7.6 Electromagnetic Radiation

[1] The C&DHS shall be compatible with its specified operating environment and meet the requirements of the EOS Spacecraft, as specified by the EMC Control Plan, PN20005869.

[2] The C&DHS and its components shall comply with the ionizing radiation design requirements specified in the environments section of IS20008501.

3.3 Design and Construction

The fabrication requirements of the Requirements for Soldered Electrical Connections, NHB 5300.4 (A–1), Requirements for Interconnecting Cables Harness and Wiring, NHB 5300.4 (G), Requirements for Crimping and Wire Wrap, NHB 5300.4 (H), Requirements for Printed Wiring Boards, NHB 5300.4 (I), Requirements for Conformal Coating and Staking of Printed Wiring Boards and Electronic Assemblies, NHB 5300.4 (K), Requirements for Rigid Printed Wiring Boards and Assemblies,NHB 5300.4 (K) shall be implemented.

3.3.1 Material, Processes, Parts, and Finishes

All materials, manufacturing processes, parts and finishes shall be selected in accordance with the corresponding requirements in the Program Approved Parts List (PA–325), 20008648 and Program Approved Materials and Processes List (PA–460), 20008650.

3.3.2 Nameplates and Product Marking

All C&DHS components shall be labeled in accordance with the GIS, IS20008501.

3.3.3 Workmanship

Workmanship during fabrication of the C&DHS components shall be in accordance with NASA standards as specified in he Requirements for Soldered Electrical Connections, NHB 5300.4 (A–1), Requirements for Interconnecting Cables Harness and Wiring, NHB 5300.4 (G), Requirements for Crimping and Wire Wrap, NHB 5300.4 (H), Requirements for Printed Wiring Boards, NHB 5300.4 (I), Requirements for Conformal Coating and Staking of Printed Wiring Boards and Electronic Assemblies, NHB 5300.4 (K), Requirements for Rigid Printed Wiring Boards and Assemblies,NHB 5300.4 (K).

3.3.4 Interchangeability

Each equipment shall be interchangeable with other equipments having the same part number.

3.3.5 Safety

[1] Measures for personnel safety shall be taken in all phases of the design, manufacturing, and testing. The design shall meet the factors of safety presented in the mechanical section of the GIS, IS20008501.

[2] The C&DHS shall meet the requirements of the Safety section of the Product Assurance Implementation Plan (PAIP), 20005397.

[3] The C&DHS design shall cause the Spacecraft to autonomously remain safe in the event of any single on–board failure or any single command error. Interlock mechanisms/ techniques shall be incorporated to prevent the execution of predefined commands which are identified as potentially hazardous to personnel or to the Spacecraft without the positive acknowledgment of ground operators.

3.3.6 Electrical Connector Design

All electrical connectors shall be selected, sized, keyed, and/or marked such that incorrect attachment to the mating connector is prevented.

3.3.6.1 Attachment of Connectors

All connectors shall attach such that the connectors cannot be inadvertently unlocked during ground operations.

3.4 Documentation

All parent and component specifications associated with this specification are shown in the EOS–A Spacecraft Specification Tree, 20008536.

3.4.1 Software Documentation

All Computer Software Configuration Items (CSCIs) will be documented as specified in the Software Management Plan, 20008655.

3.4.2 Operational Documentation

All operational requirements and constraints shall be documented in the Ground Systems Requirements Database, 20043119.

3.5 Logistics

3.5.1 Maintenance

The C&DHS shall be designed to require no maintenance other than that required during long periods of storage.

3.5.2 Supply

Sparing shall be provided at the subassembly level for all components.

3.6 Precedence

3.6.1 Precedence of Design Criteria

C&DHS design decisions shall be made to accommodate the following design criteria in the following order of precedence:

a. Safety

b. Performance

c. Reliability

d. Cost

3.6.2 Documentation Precedence

If conflicts arise between documents, the C&DHS shall adhere to design requirements as stated in the document nearest the top of the following list of requirement documents. The General Interface Specification (GIS) is applicable to the C&DHS design only as invoked herein and is, therefore, not included in the following list:

a. Requirements Document (RD)

b. Product Assurance Requirements (PAR)

c. General Instrument Interface Specification (GSFC 420–03–02)

d. Unique Instrument Interface Documents (UIIDs)

e. Contract End Item Specification (CEI)

f. External ICDs

g. C&DHS Specification

h. Equipment Module Specifications

i. Component Specifications.

3.7 Major Component Characteristics

3.7.1 General Component Characteristics

3.7.1.1 Mass, Input Power and Reliability Allocations

The C&DHS components shall be designed to levels within the allocations shown in Table XV.

Table XV. C&DHS Allocations

Component	Qty	Mass (lbs)		Input Power (Watts)		Reliability (TBR–4)
		Each	Total	Each	Total Avg.	(P_s, each)
SCC	2	13.2	26.4	17.0	17.0	.9341
CTIU	2	28.5	57.0	34.3/29.9[2]	62.2	.8550
BDU - Housekeeping	6	22.9	137.4	9.3	55.8	.9968
BDU - PROP	1	19.6	19.6	8.2	8.2	.9968
BDU - Instrument	3	19.6	58.8	8.2	24.6	.9968
SFE	1	40.0	40.0	75.0	75.0	.95
SSR – DCU	2	46.2	92.4	174[1]	174/54[3]	.92
SSR – DMU	2	252.0	504.0	(14/12)		
Total			935.6		416.8	(.8266)

notes: [1] parenthesis indicate dissipation
[2] active/standby
[3] science mode/low–power mode

3.7.1.2 Documents

[1] All C&DHS components shall conform to Sections 3, 4, 5, and 6 of the GIS, IS20008501.

[2] The C&DHS components shall utilize the standard interfaces defined in the GIS, IS20008501.

[3] All C&DHS components shall conform Sections 3, 5, 6 and 7 of the GIIS, GSFC 420–03–02, the individual UIIDs, and the individual Instrument C&DH ICD when interfacing with Instruments.

[4] All C&DHS components shall conform to Sections 3 through 7 of the DFCB, IS20008658 when interfacing with the ground operations and EOSDIS.

3.7.2 SCC

3.7.2.1 General Requirements

[1] The C&DHS shall provide a redundant pair of processors to be utilized by the SCC–based FSWS.

a. A single SCC shall meet all mission requirements specified herein and in the FSWS Requirements Specification, 20005662.

b. The SCC shall fully implement and conform to the mandatory requirements of MIL–STD–1750A and its options as specified unless specifically excepted.

[2] The SCC shall be operational during all mission phases.

[3] The SCC shall be functional during launch/ascent.

[4] The SCC shall reset upon command.

[5] Each SCC shall have three mutually exclusive states:

a. Firmware state: only the firmware is successfully loaded and running

b. Standby state: the SCC–based FSWS is successfully loaded and running

c. Active state: the SCC–based FSWS is loaded and running in the SCC and has the operational high speed I/O interface with the active CTIU.

[6] The active operational state of the SCCs, shall be mutually exclusive.

[7] The functionality assigned to each operational state shall be as specified in Table XVI.

Table XVI. Functionality of SCC's Operational States

		F/W	Standby	Active
1	Provide SCC OK signal to BDU	Yes	Yes	Yes
2	Provide operational C&T RT which accepts and validates C&T bus messages	Yes	Yes	Yes
4	Accept C&T bus messages containing commands transmitted by the C&T BC (T/R=Receive, RT subaddress=1)	Yes	Yes	Yes
5	Report failure of command execution	Yes	Yes	Yes
6	Perform memory loads per memory load convention as specified in Section 5 of the DFCB, IS2008658	Yes	Yes	Yes
7	Do memory loads based on absolute address	Yes	Yes	Yes
8	Do memory loads based on label (table) name	No	Yes	Yes
9	Accept C&T bus messages containing memory loads transmitted by the C&T BC (T/R=Receive, RT subaddress=2)	Yes	Yes	Yes
10	Report memory load status	Yes	Yes	Yes
11	Accept C&T bus messages containing the SCC OK/IM OK message transmitted by the C&T BC (T/R=Receive, RT subaddress=5)	Yes	Yes	Yes
12	Respond to IMOK message presence or absence	No	No	Yes
13	Accept C&T bus messages containing the time code message transmitted by the C&T BC (T/R=Receive, RT subaddress=6)	Yes	Yes	Yes
14	Implement the standard time services	No	Yes	Yes
15	Accept C&T bus messages containing the C&DHS safe mode command transmitted by the C&T BC (T/R=Receive, RT subaddress=7)	Yes	Yes	Yes

Table XVI. Functionality of SCC's Operational States (Continued)

		F/W	Standby	Active
16	Respond to C&DHS safe mode command	No	No	Yes
17	Accept C&T bus messages containing C&T loop back message transmitted by the C&T BC (T/R=Receive, RT subaddress=9)	Yes	Yes	Yes
18	Accept C&T bus messages containing a data gather request message transmitted by the C&T BC (T/R=Transmit, RT subaddress=9) and the C&T RT transmitting the specified number of data words.	Yes	Yes	Yes
19	Maintain synchronization with the CTIU cycles and report when out of synch	No	Yes	Yes
20	Perform memory dumps per memory dump convention as specified Sections 3 and 6 of DFCB, IS20008658.	Yes	Yes	Yes
21	Do memory dumps based on absolute address	Yes	Yes	Yes
22	Do memory dumps based on label (table) name	Yes	Yes	Yes
23	Accept C&T bus messages containing memory dump gather request transmitted by the C&T BC (T/R=Transmit, RT subaddress=2) and the C&T RT transmitting the specified number of data words (containing dump data).	Yes	Yes	Yes
24	Report memory dump status	Yes	Yes	Yes
25	Sample and route H/K telemetry appropriate to the SCC operational state to H/K telemetry RT subaddress	No	Yes	Yes
26	Provide fill data in H/K telemetry RT subaddress	Yes	No	No
27	Accept C&T bus messages containing a data gather request message transmitted by the C&T BC (T/R=Transmit, RT subaddress=17) and the C&T RT transmitting the specified number of data words.	Yes	Yes	Yes
28	Sample and route H&S telemetry appropriate to the SCC operational state to H&S telemetry RT subaddress	No	Yes	Yes
29	Provide fill data in H&S telemetry RT subaddress	Yes	No	No
30	Accept C&T bus messages containing a data gather request message transmitted by the C&T BC (T/R=Transmit, RT subaddress=18) and the C&T RT transmitting the specified number of data words.	Yes	Yes	Yes
31	Execute commands associated with testing, diagnostic operations, checkout and FDIR appropriate to the SCC operational state	Yes	Yes	Yes
32	Report firmware version number and modification updates	Yes	No	No

Table XVI. Functionality of SCC's Operational States (Continued)

		F/W	Standby	Active
33	Perform a CRC over an absolute address range upon command	Yes	Yes	Yes
34	Perform a CRC based on label (table) name	No	Yes	Yes
35	Provide operational high speed serial I/O interfaces between the active SCC and active CTIU	No	No	Yes
36	Transmit command data transfers to active CTIU	No	No	Yes
37	Generate and transmit ancillary data packet	No	No	Yes
38	Generate and transmit SCC OK message	No	No	Yes
39	Receive IMOK via BDU interface	No	No	Yes
40	Accept and validate receipt of H/K telemetry	No	No	Yes
41	Accept and validate receipt of SCC closed loop data	No	No	Yes
42	Accept and re–transmit high speed serial I/O interface loop back message	No	No	Yes

[8] SCC firmware state:

a. The SCC shall autonomously perform a non–destructive, to the extent possible, initialization processing at power–up and upon receipt of a reset command

b. The SCC shall set the busy bit in the RT status word during its initialization which includes the C&T RT initialization and reset it when ready to accept C&T bus traffic.

c. The SCC shall detect internal faults and report their presence.

d. The SCC shall store any results to be reported to ground controllers in a pre–planned memory location for later retrieval via a memory dump.

e. The SCC shall provide fill data indicative of the F/W operational state for H/K telemetry and H&S telemetry data gather requests.

f. Host responsibility for an embedded RT:

1. The SCC shall monitor the C&T RT message transactions.

2. The SCC shall allow for a possible re–transmission before routing the C&T RT stored message content for subsequent processing and also route it in within 16 msecs.

3. The SCC shall detect when a read of the RT subaddress for dump and subsequently store additional dumped data in that RT subaddress within 4 minor cycles.

[9] A powered–on SCC shall:

a. perform a health check upon SCC hardware

b. toggle an SCC OK signal level every 1.024 seconds ±100 μsec unless a fault is detected

c. reset fault state upon command.

3.7.2.2 Memory Requirements

[1] The ROM shall meet the optional MIL–STD–1750A requirement for start–up ROM.

[2] The ROM shall contain bootstrap and processor self–test routines in firmware to be invoked on power–up or on command.

[3] Memory management shall comply with MIL–STD–1750A.

[4] The SCC shall provide the following MIL–STD–1750A options.

a. memory parity

b. lock and key access protection

c. memory fault status register

3.7.2.3 Commandability

SCC hardware and firmware commands are specified in Appendix I.

3.7.2.4 Size

The SCC length (L), width (W) and height (H) shall not exceed the following dimensions: 5.0" (L) x 10.9" (W) x 9.1" (H).

3.7.2.5 Interfaces

3.7.2.5.1 BDU Interface

[1] Each SCC shall provide an interface to an internally redundant BDU for power and status monitoring.

[2] Each SCC shall receive commands for power control and processor reset from the BDU interface.

3.7.2.5.2 C&T Bus Interface

[1] The SCC shall provide a MIL–STD–1553B serial interface.

[2] The SCC shall be configured as an RT on the C&T bus.

3.7.2.5.3 High Speed Serial I/O Interfaces

[1] The active SCC shall initialize and support the operations of the serial I/O link.

[2] The SCC shall accept data from either CTIU, but not simultaneously, at a transfer rate of 500 kbps.

3.7.2.5.4 Thermal

The primary method of heat dissipation shall be conductive to the base plate.

3.7.3 CTIU

[1] The CTIUs shall be externally redundant.

[2] Each CTIU shall have a unique C&T RT address.

3.7.3.1 Performance

3.7.3.1.1 Command Reception and Distribution

[1] There shall be two nominal operational states for a CTIU

a. active

b. standby.

[2] Both CTIUs shall be permitted to be in standby operational state at the same time.

[3] A CTIU shall have a non–operational self–test state.

3.7.3.1.1.1 Uplink Command Data Transfer

[1] The CLTU processing by a CTIU shall begin within 30 seconds of application of power.

[2] The CLTU processing by a CTIU shall be disrupted for no greater than 30 seconds after a CTIU reset.

3.7.3.1.1.1.1 S–Band Transponder Input

[1] As shown in Figure 27, in the event of simultaneous detection of RF lock = true bit-lock = true and a CLTU synchronization marker detected from the S–band transponders by a CTIU,

a. CTIU 1 shall process CLTUs from its A electronic interface with the S–band transponder

b. CTIU 2 shall process CLTUs from its A electronic interface with the S–band transponder.

[2] The 1553B terminal addresses shall be used to indicate a CTIU's designation as 1 or 2 and in the determination of the Spacecraft ID.

[3] The CTIUs shall interface with the S–band forward link service as specified in Table XVII.

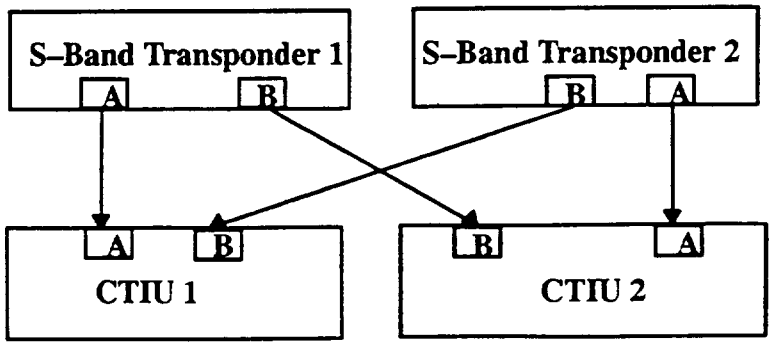

Figure 27. CTIU Input Ports with S–Band Transponders

Table XVII. Forward Link Service Interface

	Capabilities	Standby CTIU	Active CTIU
1	Always have one of the two S–band transponders electronic interfaces enabled	Yes	Yes
2	Upon command, disable one of the two enabled S–band transponder electronic interfaces	Yes	Yes
3	Upon RF and bit lock, ignore the other S–band transponder electronic interface and begin data acquisition	Yes	Yes
4	From the S–band transponder which was selected for data acquisition:		
	a. send the Doppler initiate signal and receive the Doppler sample mark signal	Don't Care	Yes
	b. receive the PN epoch code	Don't Care	Yes
5	Report loss of data acquisition in telemetry	Yes	Yes

3.7.3.1.1.1.2 Uplink Command Data Transfer Processing

The CTIUs shall perform uplink command data transfer processing as specified in Table XVIII.

Table XVIII. Uplink Command Data Transfer (CLTU) Processing

	Capabilities	Standby CTIU	Active CTIU
1	Perform uplink command data transfer processing whenever a CLTU is addressed to that CTIU in accordance with the DFCB, IS20008658	Yes	Yes
2	Ignore CLTUs unless addressed (based Spacecraft ID in CLTU header) to that CTIU	Yes	Yes
3	If RT address not same as CTIU RT address, report in telemetry receipt of invalid command	Yes	No
4	Generate a CLCW	Yes	Yes
5	Insert CLCW in CCSDS VCDU trailer for H/K telemetry	No	Yes
6	Insert CLCW in H/K telemetry once per CADU	Yes	Yes
7	Insert CLCW in CCSDS VCDU trailer for H&S telemetry	No	Yes
8	Insert CLCW in H&S telemetry once per CADU	Yes	No

3.7.3.1.1.2 SCC–to–CTIU Command Data Transfer

The active CTIU shall have an operational interface only with the active SCC to receive command data transfers via the SCC–to–CTIU high speed serial I/O interface.

3.7.3.1.1.3 Command Distribution

The CTIUs shall perform command distribution as specified in Table XIX.

Table XIX. Command Distribution

	Capabilities	Standby CTIU	Active CTIU
1	Be the C&T BC	No	Yes
2	Be a C&T RT	Yes	No
3	Accept, decode and distribute to the C&T bus the command data transfers which were received from either a forward link service or the SCC–based FSWS	No	Yes
4	If RT address is unassigned, report in telemetry receipt of invalid command.	No	Yes
5	Accept, decode and execute command data transfers received via the C&T bus	Yes	No
6	Accept, decode and execute SCC–based FSWS transmitted command data transfers received via the SCC–to–CTIU serial I/O whose RT address is the same as the CTIU	No	Yes

Table XIX. Command Distribution (Continued)

	Capabilities	Standby CTIU	Active CTIU
7	Execute Spacecraft configuration commands (CTIU relay driver executes these commands)	Yes	Yes
8	Execute a hardware disable command to deactivate the other CTIU.	Yes	Yes

3.7.3.1.1.4 CTIU C&T RT Subaddress

[1] The CTIUs shall use the following RT subaddresses as specified in Section 5 of the DFCB, IS20008658, Section 6 of the GIIS, GSFC 420–03–02 and shown in Table XX:

Table XX. CTIU C&T RT Subaddresses

	Standby CTIU	Active CTIU
T/R=Receive		
RT subaddress 0, mode code [via C&T bus only]	Yes	No
RT subaddress 1, command	Yes	Yes
RT subaddress 2, memory load data	Yes	Yes
RT subaddress 3, SCC OK/IM OK [via C&T bus only]	Yes	No
RT subaddress 7, safe mode command [via C&T bus only]	Yes	No
RT subaddress 9, loop back [via C&T bus only]	Yes	No
T/R=Transmit		
RT subaddress 2, memory dump data [via C&T bus only]	Yes	No
RT subaddress 9, loop back [via C&T bus only]	Yes	No
RT subaddress 17, H/K telemetry [via C&T bus only]	Yes	No
RT subaddress 18, H&S telemetry [via C&T bus only]	Yes	No
RT subaddress 31, mode code [via C&T bus only]	Yes	No

3.7.3.1.1.5 CTIU Commands

The CTIUs shall perform command execution as specified in Table XXI.

Table XXI. CTIU Command Execution

	Capabilities	Standby CTIU	Active CTIU
1	Accept, decode and begin to execute a CTIU command (RT address=CTIU's) no later than minor cycle N+1 when scheduled for delivery by the bus utilization table in minor cycle N	Yes	Yes
2	Upon command, the CTIU shall supply information, via the diagnostic data stream, to the ground controller concerning: a. versions and dates concerning baseline firmware and subsequent modifications b. table locations and sizes.	Yes	Yes
3	Upon command, the CTIU shall calculate a CRC value and storing it a defined memory location to be dumped via the diagnostic data stream later by the ground controller for a: a. table (label) b. absolute address range.	Yes	Yes
4	Accept memory loads via the uplink path where the Spacecraft ID and RT address in the uplink command data transfer indicates execution by the object CTIU	Yes	Yes
5	Accept memory loads and related commands via C&T bus	Yes	No
6	Dumping memory via C&T bus	Yes	No
7	Dumping memory directly to S–band transponder	No	Yes
8	Execute CTIU reset upon command	Yes	Yes
9	Reflect the execution of a CTIU command in telemetry no later than 8 seconds after the execution was completed	Yes	Yes

3.7.3.1.1.6 Verification of Electronic Interfaces

The CTIUs shall support verification of electronic interfaces as specified in Table XXII.

Table XXII. Verification of Electronic Interfaces

	Capabilities	Standby CTIU	Active CTIU
1	Executing commands to verify C&T BC interface with a C&T RT is functional, i.e., performing a loop back	No	Yes
2	By reporting problems with communicating with C&T RTs in telemetry	No	Yes
3	By setting a busy bit in C&T RT status word until capable of communicating with the C&T BC during initialization	Yes	No
4	By setting a busy bit in LRS RT status word until capable of communicating with the LRS BC during initialization	Yes	Yes

Table XXII. Verification of Electronic Interfaces (Continued)

	Capabilities	Standby CTIU	Active CTIU
5	Upon command, issuing a loop back command via the CTIU–to–SCC serial interface to the active SCC and expecting its return on the SCC–to–CTIU high speed serial I/O interface	No	Yes
6	Upon command, issue the high speed serial I/O local loop back	Yes	Yes

3.7.3.1.1.7 CTIU Memory Load

The CTIU which is the object of the memory load shall comply with the following memory load scenario:

[1] A CTIU memory load operation shall consist of loading a contiguous block of CTIU memory involving one or more individual load transactions (command data transfers) where each transaction will have a maximum of 32 data words except the last which may have from 1 to 32 data words.

[2] The object CTIU shall accept, decode and begin to implement the load parameters in the memory initiate load command within the next minor cycle following the command delivery and complete processing within 3 minor cycles following the command delivery.

[3] The memory initiate processing shall include the following:

a. load start location by label (table) name

b. retain CRC and the expected total word count

c. report status in telemetry.

[4] The object CTIU shall accept, process and store a subsequent command data transfer containing the memory load within 3 minor cycles following the minor cycle in which it was delivered.

[5] The memory load processing shall include the following:

a. ignore the receipt of any memory initiate load command until the current memory load operation is complete

b. only over–write within the range of addresses based on data in the memory initiate load command

c. Upon receipt of the last memory load in a memory load operation compare the on–board computed CRC with the CRC supplied in the memory initiate command

d. report status.

3.7.3.1.1.8 CTIU Memory Dump

The CTIU which is the object of the memory dump shall comply with the following memory dump scenario:

[1] A CTIU memory dump operation shall consist of dumping a contiguous block of CTIU memory involving one or more individual dump transactions (dump data blocks) where each transaction will have a maximum of 32 data words except the last which may have from 1 to 32 data words.

[2] The object CTIU shall accept, decode and implement the dump parameters in the memory initiate dump command within 4 minor cycles sent to it following the minor cycle in which the command was delivered.

[3] The object CTIU's memory initiate dump command shall include the following:

a. dump start location which may be either an absolute address or by label (table) name

b. calculate a CRC, if so directed

c. report in telemetry if everything is OK to proceed or if there is a problem

d. the object CTIU shall perform a memory dump to an accessible location for gathering no later than the third minor cycle following the minor cycle in which the memory initiate dump command was delivered

[4] The initiate memory dump gather command sent to the active CTIU shall conform to the memory dump conventions specified in Section 5 of the DFCB, IS20008658.

[5] The active CTIU shall implement the initiate memory dump gather command within 4 minor cycles of receipt and issue the first memory dump gather request 2 time mark instants after the initiate memory gather command was implemented.

[6] During an ongoing memory dump operation, the object CTIU shall ignore the receipt of memory initiate dump command sent to it.

[7] The object CTIU shall:

a. store the next memory dump data at an accessible location for retrieval no sooner than 100 µsecs after the object CTIU detected the dump data was gathered and no later than 32 msec

b. report status.

[8] The CTIU shall accept, decode and execute a CTIU command to abort a memory dump operation.

3.7.3.1.1.9 CTIU Reset Commands

[1] The CTIU shall have the following methods of reset:

a. CTIU–OK timer:

1. Every 1.024 seconds, the CTIU shall reset a hardware timer and update an "operational state" hardware register with the CTIU's current operational state.

2. The hardware timer's timeout period shall be 2.048 seconds.
3. The CTIU shall execute the CTIU reset and return to the same operational state [active, standby] it was in prior to the occurrence of the time–out of the hardware timer.

b. Firmware reset:

1. The CTIU firmware shall execute the CTIU reset on command.
2. The CTIU shall be in the standby operational state at the end of the reset.

c. Remote Reset:

1. The CTIU shall execute the CTIU reset upon receipt of a hardware signal from the other CTIU.
2. The CTIU shall be in the standby operational state at the end of the reset.

d. Power–on and initialize reset: Both CTIUs are initialized and reset upon application of power and the operational state for CTIU 1 is active and CTIU 2 is standby.

1. Each CTIU shall execute the CTIU reset upon power–up.
2. CTIU1 shall become the active CTIU.
3. CTIU2 shall become the standby CTIU.

3.7.3.1.1.9.1 CTIU Reset Response

[1] The CTIU shall implement the CTIU reset command as follows:

a. perform diagnostic tests

b. download the CTIU firmware from PROM

c. initialize the Spacecraft clock to the default date/time

d. do firmware status checks

e. activate the CTIU uplink commanding processes

f. configure but not activate all C&DHS links with the S–band transponder for H&S telemetry

g. configure but not activate the link to SSR for H/K telemetry

h. configure but not activate the link to the LV port for H&S telemetry

i. configure but not activate the link to the umbilical port for H/K telemetry

j. disable autonomous delivery of safe–mode command messages

k. disable autonomous delivery of ancillary data message

l. disable autonomous delivery IMOK message

m. initialize the C&T RT

n. initialize the LRS RT

o. place the CTIU in a standby state by the end of this sequence.

3.7.3.1.1.10 Remote Hardware Disable Interface

[1] The CTIU shall accept a relay drive command for remote hardware disable.

[2] Upon receipt of this command, the CTIU shall disable the TM&F bus, the C&T BC function, and the function to distribute telemetry to the S–band transponder.

3.7.3.1.1.11 CTIU Operational State Transitions

3.7.3.1.1.11.1 Standby to Active

Upon receipt of the CTIU command to transition to an active state from a standby state, the following shall occur by the end of the activation sequence:

a. activate the C&T bus management/controller function

b. distribute and deliver command data transfers

c. a master cycle shall be established on a time mark instant

d. activate the bus utilization schedule, which covers minor cycle tasking, starting on a master cycle

e. activate the downlink to the S–band starting on a master cycle

f. activate the transmission of data over the LRS

g. place the CTIU in an active state by the end of this sequence.

3.7.3.1.1.11.2 Active to Standby

[3] Upon receipt of a CTIU command to transition to a standby state from an active state, the following shall occur by the end of the activation sequence:

a. deactivate the C&T bus management/controller function

b. deactivate the distribution and delivery of command data transfers

c. disable autonomous delivery of IMOK messages

d. disable autonomous delivery of ancillary data message

e. deactivate the bus utilization table

f. deactivate the downlink to the S–band starting on a master cycle

g. deactivate the transmission of data over the LRS

h. initialize the C&T RT

i. terminate transmission of packets via the LRS bus

j. place the CTIU in a standby state by the end of this sequence.

[4] The active CTIU shall accept commands to become standby.

[5] The standby CTIU shall accept commands to become active.

3.7.3.1.1.12 CTIU Test, Diagnostic Operations and Checkout Commands

[1] The active CTIU shall support ground controller commands to perform loopback for Spacecraft equipment with C&T RTs by:

a. accepting a command data transfer to perform a loopback test on a specified RT using pattern A [all As] or pattern B [all 5s] on the C&T bus

b. delivering the loopback 32–data word pattern [A or B] to the designated recipient in a minor cycle/message type which permits a memory dump but only if there is no memory dump activity on–board.

c. generate a data gather request to the designated recipient causing the loop back to be transmitted to the CTIU in the next available minor cycle/message which permits a memory dump but only if there is no memory dump activity on–board

d. comparing the loopback data received from the designated recipient against the CTIU resident fill pattern

e. storing the loopback test results in a defined memory location for later retrieval by the ground controller.

[2] The active CTIU shall support the following loopback scenario on the high speed serial I/O interfaces with the SCC as follows:

a. The CTIU shall transmit a loop back message to the designated active SCC–based FSWS over the CTIU–to SCC high speed serial interface.

b. The CTIU shall wait to receive the loopback message on the SCC–to–CTIU serial interface unless there is no response back from the SCC–based FSWS within a half–second, then the CTIU shall repeat the loopback a maximum of 4 more times spaced at half second intervals.

c. Upon receipt and verification of the loop back message from the SCC–based FSWS, the CTIU shall indicate in telemetry the high speed serial I/O linkage is OK.

d. If there is no response after the additional attempts, the CTIU shall report the high speed serial I/O linkage is not OK in telemetry.

e. If failure occurred, the CTIU shall invoke a local loop back command and report the results in telemetry.

[3] The CTIU shall perform loop back for the SCC/CTIU high speed serial I/O interfaces upon command.

[4] A CTIU shall support ground controller commands to perform the CTIU self–test scenario by:

a. accept, decode and execute a command data transfer to enable the CTIU self–test state

b. reporting the enable self–test state in H&S telemetry

c. accepting, decoding, and executing a command data transfer to do a CTIU self–test

d. changing its current operational state to a test state

e. performing the tests which do not inhibit the CTIU from returning to its prior operational state

f. writing the test results in a defined location in memory for later retrieval by the ground controller

g. as part of completion, disabling CTIU self–test state

h. at completion of the self–test, returning to its prior operational state [standby or active].

[5] The CTIU shall accept a command data transfer to disable the CTIU self–test state.

3.7.3.1.2 Telemetry Data: Sampling, Gathering , Formatting and Distribution

3.7.3.1.2.1 Data Sampling

The CTIUs shall provide the following capabilities to sample data as specified in Table XXIII.

Table XXIII. Data Sampling

	Capabilities	Standby CTIU	Active CTIU
1	Sample its own data intended for H/K telemetry, H&S telemetry, SCC closed loop, and diagnostic based on both the CTIU's operational state and CTIU telemetry requirements specified in Appendix I	Yes	Yes
2	Transmit BDU sample schedule tables	No	Yes

3.7.3.1.2.2 Data Gathering

The CTIUs shall provide the following capabilities to gather data as specified in Table XXIV.

Table XXV. Data Gathering

	Capabilities	Standby CTIU	Active CTIU
1	Gather H/K telemetry from Spacecraft equipment	No	Yes
2	Gather H&S telemetry from Spacecraft equipment	No	Yes
3	Gather SCC closed loop data from Spacecraft subsystems	No	Yes
4	Gather diagnostic data from Spacecraft equipment	No	Yes

3.7.3.1.2.3 Data Distribution

The CTIUs shall provide the following capabilities to distribute telemetry data as specified in Table XXVI.

Table XXVI. Data Distribution

	Capabilities	Standby CTIU	Active CTIU
1	Distribute H/K telemetry to SCC–based FSWS	No	Yes
2	Distribute SCC closed loop data to SCC–based FSWS	No	Yes
3	Be an operational LRS RT	Yes	Yes
4	Distribute H/K telemetry for inclusion in the low–rate science data	No	Yes
5	Distribute ancillary data for inclusion in the low–rate science data	No	Yes
6	Distribute H/K telemetry to the SSR for later playback to S–band transponders	No	Yes
7	Distribute SSR recorded H/K telemetry to S–band to the S–band transponder for playback to the ground	No	Yes
8	Distribute real–time H/K telemetry to the S–band transponder	No	Yes
9	Distribute real–time H&S telemetry to the S–band transponder	No	Yes
10	Distribute diagnostic data stream to the S–band transponder	No	Yes

3.7.3.2 Computing Resources

[1] The CTIU shall, as a minimum, provide the following computing resources:

a. 750 KIPS instruction throughput

b. 96 K ROM

c. 192 K RAM.

[2] A single CTIU shall meet all mission requirements specified herein.

[3] The CTIU shall allocate computing resources for the BDU sampling schedules.

[4] The CTIU shall allocate computing resources for the bus utilization table.

[5] The CTIU shall allocate computing resources for the S–band uplink command data transfer processing.

[6] The CTIU shall allocate computing resources for S–band downlink processing.

[7] The CTIU shall allocate computing resources for SCC–to–CTIU high speed serial I/O.

[8] The CTIU shall allocate computing resources for the CTIU–to–SCC high speed serial I/O.

[9] The CTIU shall allocate computing resources for the C&T bus.

[10] The CTIU shall allocate computing resources for signals received from other Spacecraft subsystems and for their processing

a. MO frequency reference error detection

b. PN epoch pulse

c. Doppler measurement.

[11] A CTIU shall allocate computing resources to itself for:

a. executing its own commands

b. generating its required telemetry

c. time distribution and synchronization services

d. distribution and delivery of command data transfers

e. managing the diagnostic data gather requests

f. managing the C&T BC when an active CTIU

g. managing the C&T RT when a standby CTIU

h. managing the LRS RT

i. managing its own memory loads

j. managing its own memory dumps

k. managing onboard memory dumps

l. tests

m. FDIR.

3.7.3.2.1 CTIU Functions

3.7.3.2.1.1 Time Services

[1] The CTIU shall maintain a Spacecraft clock in both the standby and active CTIUs.

[2] The active and standby CTIU shall monitor the supplied MO frequency reference using the internal crystal oscillator frequency in the CTIU.

[3] If an error occurs:

a. The active and standby CTIU firmware shall command the CTIU hardware to use its own internal crystal oscillator frequency instead of the Master Oscillator frequency

b. The active CTIU shall command the TM&F bus off

c. The active and standby CTIU shall inform the ground controller, via the downlink telemetry, when this event occurs.

[4] The autonomous switching from a MO to the internal oscillator shall be enabled or disabled upon command.

[5] The monitoring of the MO frequency reference using the internal crystal oscillator in the local CTIU shall be enabled or disabled upon command.

[6] If the frequency reference is unreliable or not available, the following functions shall be suspended:

a. distribution of the IMOK messages

b. C&T bus activity

c. telemetry distribution to the S–band transponders, hardlines, LRS bus, SCC.

3.7.3.2.1.2 C&T BC

The active CTIU shall have a set up time of 60 ± 16 μsec. This is the time elapsed from hardware interrupt signalling 8.000 tick to time the first bit of the first word of a message appears on the bus. See Figure 28.

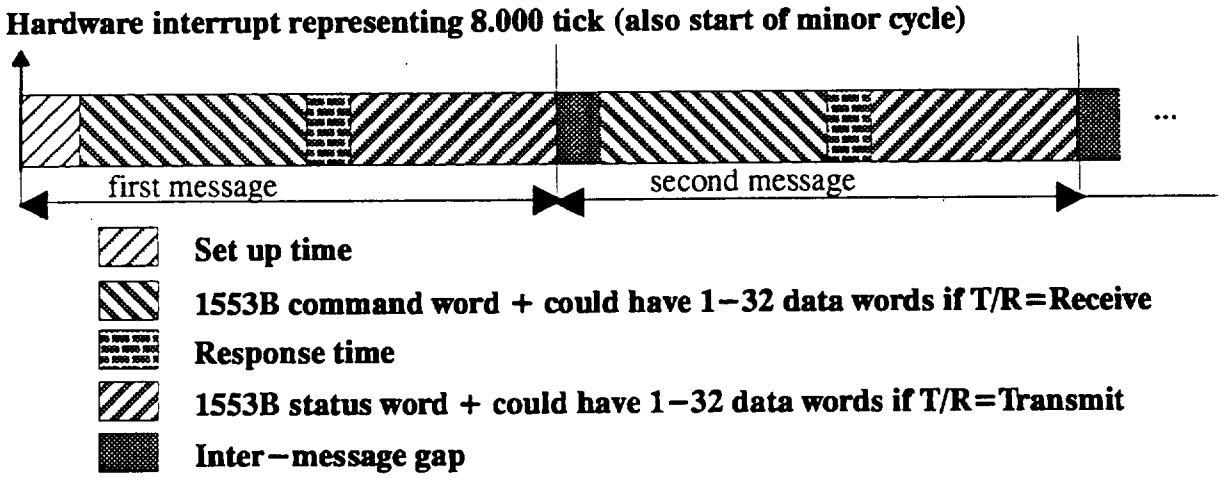

Figure 28. Minor Cycle Timing

3.7.3.3 Interfaces

3.7.3.3.1 Thermal

The primary method of heat dissipation shall be conductive to the base plate.

3.7.4 Bus Data Unit (BDU)

3.7.4.1 General Requirements

[1] The BDU shall accept and process a command data transfer via the C&T bus throughout all mission phases.

[2] The BDU shall sample and format telemetry for transmission throughout all mission phases.

[3] The BDU shall be internally redundant.

[4] The BDU shall be reconfigurable in the event of a single failure.

[5] The BDU shall perform an autonomous self–initialization upon application of power.

3.7.4.1.1 CTIU to BDU Power On/Off Commanding

[1] The BDU shall be powered on/off via relay drive commands executed by the CTIU.

[2] The BDU power on/off commands shall be as follows:

a. Side 1 On

b. Side 1 Off

c. Side 2 On

d. Side 2 Off

[3] The BDU shall become operational and communicating with the CTIU within 1.024 seconds after power is applied.

3.7.4.2 BDU Sub–Minor Cycle Task Processing

[1] The BDU shall operate on 1 millisecond subdivisions of the Spacecraft 8 millisecond minor cycle as shown in Figure 29.

[2] The BDU shall assume each command data transfer shall have, at most, one possible re–transmission.

[3] The BDU shall process a validated message containing a command (T/R=Receive, RT subaddress=1) in sub–minor cycle 7 of the same minor cycle only if it was received during the first 6 sub–minor cycles.

[4] The BDU shall process a validated message containing a data gather request (T/R=Transmit, RT subaddress=3) for data sampled in some prior minor cycle.

[5] The BDU shall process a validated message containing a BDU sample schedule table (T/R=Receive, RT subaddress=3) from 1 to 16 entries, starting at transition to sub–minor cycle 3 and ending at the transition to sub–minor cycle 7, only if the BDU sample schedule table was received within the first 3 sub–minor cycles of the same minor cycle N.

3.7.4.3 Commandability

[1] The BDU commands shall be executed as specified in Appendix I.

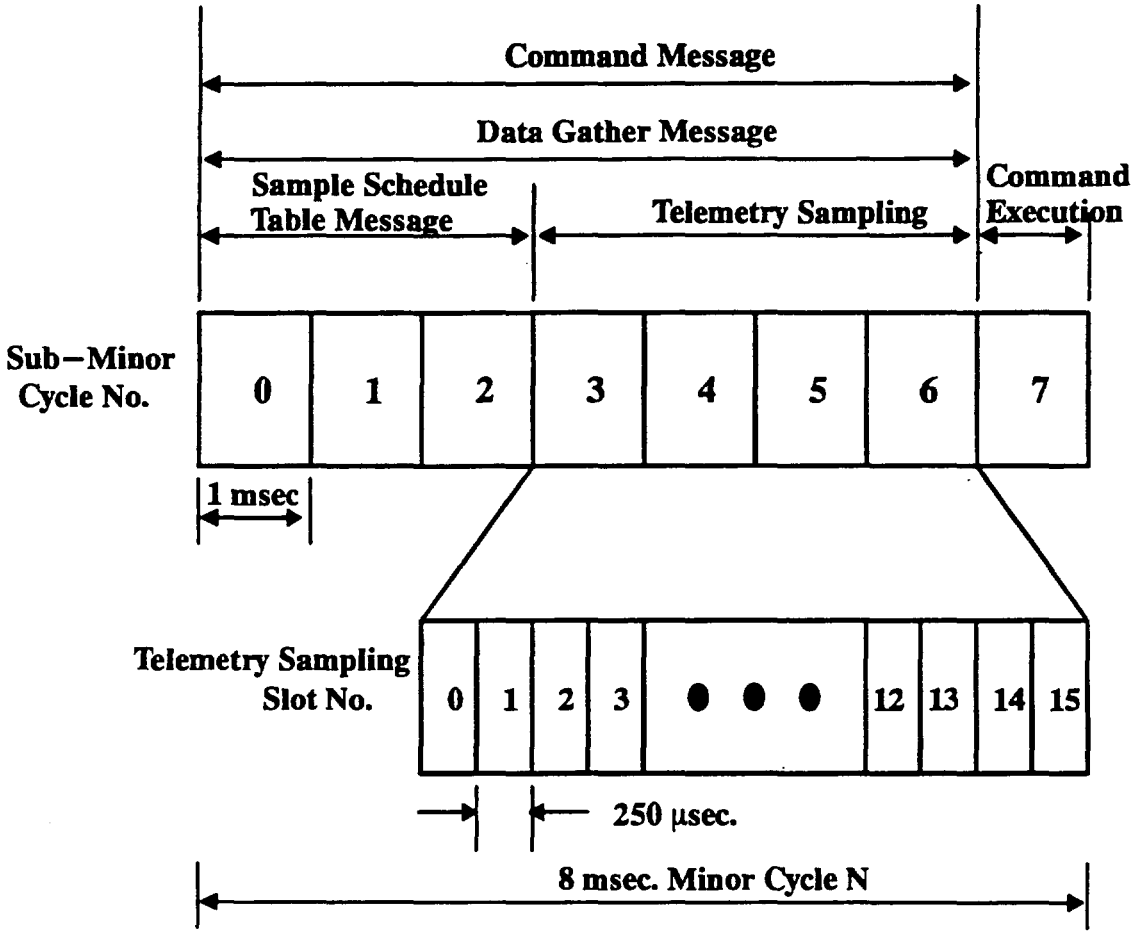

Figure 29. BDU Sub–Minor Cycle Task Processing

[2] The BDU command structure shall be as defined in DFCB, IS20008658.

3.7.4.4 Testing

[1] The BDU shall accept a message (T/R=Receive, RT subaddress=9) from the CTIU containing a loop back for storage and, on receipt of another message (T/R=Transmit, RT subaddress=9), do subsequent transmission to the CTIU.

[2] The loopback test pattern returned to the CTIU shall only be 1 data word, the last word in the loop back pattern.

3.7.4.5 BDU Environment and I/O Quantities

The BDU Environments and I/O quantities shall be as specified in Table XXVII.

3.7.4.6 Functional Requirements

3.7.4.6.1 C&T Bus Inputs

a. Commands

Table XXVII. BDU Environments and I/O Quantities

BDU Type	I/O Type & Quantities (TBR–5)				Envir
	A	B	C	D	P
GN&C POWER COMS/C&DH DAS, SSR, RWA	16	128	64	192	P
Instrument	0	96	0	192	E
Propulsion	16	96	0	128	P

I/O Types:
A: Serial I/O
B: Relay Drive
C: Logic Pulses
D: Active Analog/Passive Analog/Active Bi-level[1]/Passive Bi-level

Environments:
E: Exposed [open to deep space]
P: Protected [inside a higher assembly]

[1] Instruments do not use Active Bi–level

b. Synchronize with data word

c. Data Sampling Tables [H/K telemetry, H&S telemetry, SCC closed loop]

d. Data Gathering Requests [H/K telemetry, H&S telemetry, SCC closed loop]

e. Bus management commanding by the CTIU

3.7.4.6.1.1 Processing Requirements

[1] The BDU shall maintain synchronization with the CTIU minor cycle.

a. The BDU shall reset its sub–minor cycle task schedule upon its RT reception of a valid synchronize with data word.

b. The BDU shall ignore the data word portion of the synchronize with data word.

c. In the event of a retransmission of the synchronize with data word, the BDU shall re–synchronize to the second transmission of the synchronize with data word.

d. The accuracy of the point of synchronization within the BDU shall be 26 ± 4 μsec **(TBR–6)** relative to the command synch zero crossing of the synchronize with data mode code as shown in Figure 30.

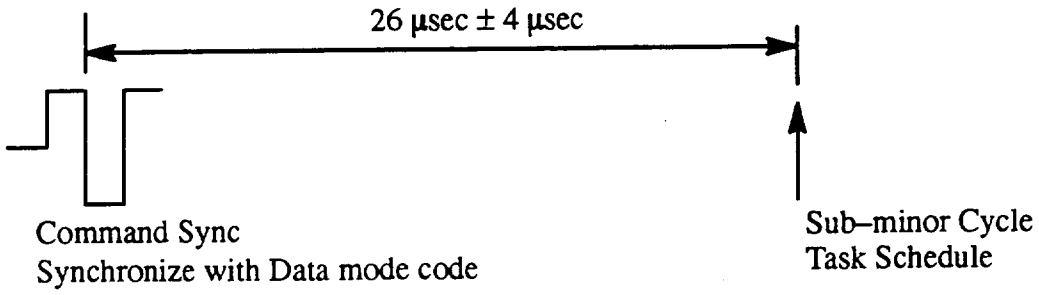

Figure 30. Minor Cycle Synchronization

e. The minor cycle drift between scheduled receipt of the synchronize with data word mode code commands shall be ± 26 µsec as shown in Figure 31.

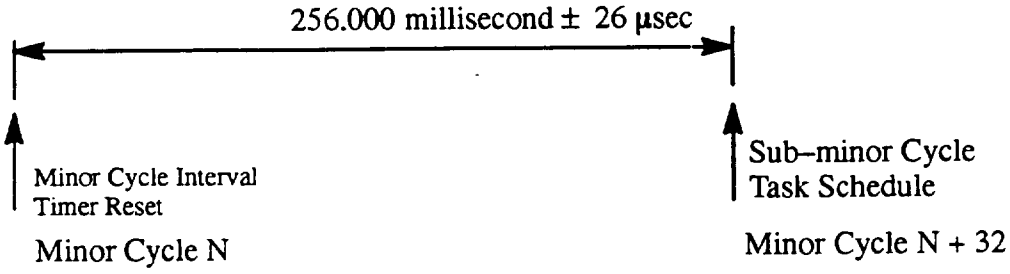

Figure 31. Minor Cycle Drift Over 32 Minor Cycles

[2] The BDU shall accept and process messages to issue serial, relay pulse, or logic level pulses commands received via the C&T bus.

a. There shall be a maximum of 1 minor cycle command task (T/R=Receive, RT subaddress=1) every minor cycle.

b. If a relay drive command was executed in minor cycle N then in minor cycle N+1 through minor cycle N+12, the BDU shall execute at least one message containing a command per minor cycle providing the command is either:

1. a logic level pulse command

2. or up to 6 serial command contained within the same message.

c. The BDU shall respond to a command (T/R=Receive, RT subaddress=1) received after the transition from sub–minor cycle 6 to sub–minor cycle 7 as a timing fault.

d. If a validated command was received in minor cycle N prior to a timing fault occurring in the same minor cycle, the validated command shall be processed in sub–minor cycle 7.

e. All commands, except the relay drive commands, shall start and complete in subcycle 7.

f. The BDU shall begin to process command within 35 ± 15 µsec **(TBR–6)** of the transition to subcycle 7.

g. For a command containing additional data words where each data word contains serial command, the BDU shall begin to process the next data word within 35 ± 15 µsec **(TBR–6)** of the preceding data word.

h. The BDU shall complete an ongoing relay drive command initiated in a prior minor cycle if a timing fault was detected in a subsequent minor cycle.

[3] Data sampling:

a. The BDU shall accept a BDU sample schedule table in any minor cycle.

b. Only upon receipt of a new BDU sample schedule table in minor cycle N, shall the BDU begin to sample the data in minor cycle N.

c. The BDU shall respond to a BDU sample schedule table (T/R=Receive, RT subaddress=3) received after the transition from sub–minor cycle 2 to sub–minor cycle 3 as a timing fault.

d. The BDU shall sequentially process the entries in BDU sample schedule table allocating a fixed 250 milliseconds time to each entry.

e. The initiation of sampling starting on the transition to sub–minor cycle 3 or starting a subsequent 250 µsec sampling slot shall be 35 ± 15 µsec TBR–6 as shown in Figure 32.

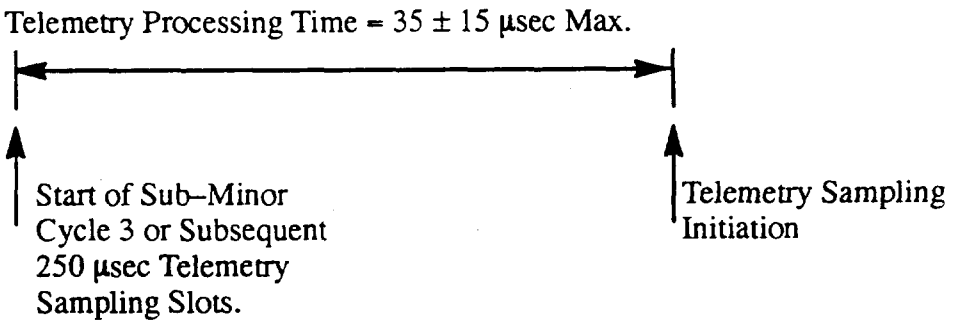

Figure 32. Telemetry Processing Time

[4] Data gather request:

a. The BDU shall respond to a data gather request issued by the CTIU in minor cycle N for data sampled in a preceding minor cycle as well as accepting a BDU sample schedule table issued in minor cycle N.

b. The BDU shall respond to a data gather request (T/R=Transmit, RT subaddress=3) received after the transition from sub–minor cycle 6 to sub–minor cycle 7 as a timing fault.

3.7.4.6.2 Output

Table XXVIII shows the output from each type of transaction the BDU has via the C&T bus.

Table XXVIII. BDU Output Table

Transaction	C&T Bus	BDU does
SCC–based FSWS commands	RT status word	command distribution
real–time commands generated by the ground controller	RT status word	command distribution
BDU sampling schedule table	RT status word	stores BDU sample schedule table in appropriate RT subaddress
data gathering request	RT status word with associated data words	stores sampled data in appropriate RT subaddress
bus management	RT status word with possible data word	processing by RT hosted by BDU

3.7.4.7 Timing Fault

[1] Upon occurrence, the BDU shall assert the busy bit and subsystem flag bits in the RT status word to indicate a timing fault occurred and inhibit the RT access to the BDU.

[2] Recovery from the timing fault shall occur in a subsequent minor cycle upon reception of the synchronize with data word.

3.7.4.8 Passive Telemetry Sampling

The rise time of the current source for passive telemetry sampling shall be no greater than 1 milliamp/µsec.**(TBR–7)**

3.7.4.9 Size

The size of the BDUs shall be as specified in the Housekeeping BDU, ICD20008568, and in the Instrument BDU, ICD 20039943.

3.7.4.10 Interfaces

3.7.4.10.1 C&T RT

[1] The BDU shall utilize the C&T bus to receive and transmit data between CTIU and itself.

[2] Initialization of the C&T RT by the BDU:

a. During the C&T RT initialization the busy bit in the status word shall be asserted by the BDU.

b. The first reception of the synchronize with data word shall cause the reset of the busy bit, the BDU to synchronize with the CTIU, and enable C&T message processing.

[3] The BDU shall monitor the RT message transactions.

[4] The BDU shall route data to the appropriate data buffers for transmission by RT.

[5] The BDU shall route data from the RT to appropriate data buffers for subsequent processing.

[6] The BDU shall use the following RT subaddress assignments:

a. transmit/receive bit = receive

1. mode code	RT subaddress 0
2. command	RT subaddress 1
3. data sample table	RT subaddress 3
4. loop back	RT subaddress 9

b. transmit/receive bit = transmit

1. Telemetry data	RT subaddress 3
2. loopback	RT subaddress 9
3. mode code	RT subaddress 31

c. All remaining subaddresses shall be illegal.

3.7.4.10.2 Thermal

[1] The primary method of heat dissipation shall be radiative for BDU interfacing with Instruments.

[2] The primary method of heat dissipation shall be conductive to the base plate for BDU interfacing with Spacecraft subsystems and other C&DHS components.

3.7.5 Science Formatting Equipment (SFE)

3.7.5.1 General Requirements

[1] The SFE shall generate all internally used clock frequencies.

[2] The SFE shall not be required to operate during launch.

[3] The SFE shall be reconfigurable via ground controller command in the event of a single failure.

[4] The SFE shall perform an autonomous self-initialization upon application of power.

[5] The SFE shall not support memory dumps.

[6] The SFE shall not support memory loads.

3.7.5.2 Telemetry

[1] The SFE telemetry shall be as specified in Appendix II.

[2] The SFE telemetry shall provide telemetry for gathering by the SFE's BDU.

a. Serial telemetry generated by the SFE shall be provided to the BDU via a standard digital serial interface.

3.7.5.3 Testing

[1] The SFE shall support self test commands.

[2] The SFE shall perform a health check upon command.

3.7.5.3.1 Redundancy

The SFE design shall be sufficiently redundant to recover in the event of any single failure or any single command error.

3.7.5.3.2 FDIR

The SFE shall recover, without intervention, from SEU induced faults.

3.7.5.3.3 Functional Requirements

3.7.5.3.3.1 Input

a. Commands to the SFE

b. LRS bus traffic [science data from LRS Instruments, ancillary data packets, H/K telemetry packets, polling messages and their responses]

c. HRDL transactions [high rate science data from Instruments, HRDL management transactions]

d. SSR playback

3.7.5.3.3.2 Processing Requirements

[1] For receiving serial commands, the SFE shall provide a serial interface with the BDU.

a. SFE operating mode and configuration commands shall be received through this interface.

b. SFE input/output rate commands shall be received through this interface.

[2] The SFE shall format and distribute the science data.

[3] The SFE shall monitor and report status on its interfaces in telemetry.

3.7.5.3.3.3 Output

a. Execution of valid commands

b. science data stored on the SSR

c. real–time science data

d. playback science data

e. real–time science data to the DAS modulator

f. playback science data to the DAS modulator

g. Telemetry as specified in Appendix II

3.7.5.4 Size

The SFE shall not exceed 18"L x 14"W x 10"H.

3.7.5.5 Interfaces

3.7.5.5.1 Low-Rate Science Bus Interface

[1] The SFE shall host the LRS BC.

[2] The SFE shall verify the LRS bus interface upon command.

3.7.5.5.2 High Rate Input Interfaces

The SFE shall individually select the A or B interfaces with each Instrument.

3.7.5.5.3 COMS Output Interfaces

[1] The SFE shall interface with the Ku–band and X–band modulators.

[2] The KSA and DAS Modulators interface characteristics shall be as follows:

a. Quantity:	8 ports
b. Data Rate (each interface):	150 Mbps max. total
c. Data Stream Format:	NRZ–L
d. Electrical:	0.595V (min) differential ECL

3.7.5.5.4 BDU Interface

The SFE shall receive commands for power control and reset from the BDU interface.

3.7.5.5.5 Thermal

The primary method of heat dissipation shall be conductive to the base plate.

3.7.6 Solid State Recorder (SSR)

3.7.6.1 General Requirements

[1] The SSR shall conform to the I/O data format requirements as specified in Section 5 of the DFCB, IS20008658, with the exception SSR decoded commands shall not exceed 6 data words in length following the command descriptor which is decoded by the BDU.

[2] The SSR shall be internally redundant.

[3] The SSR shall be reconfigurable upon command in the event of a single failure.

[4] The SSR shall perform an autonomous self–initialization upon application of power.

[5] The SSR shall perform a health check upon command.

[6] All embedded software shall comply with the guidelines in the Software Requirements for EOS Subcontractors, PS2008633.

[7] The SSR shall support independent operations of the SFE and CTIU interfaces.

3.7.6.2 Commandability

[1] The SSR commands shall conform to requirements specified in ICD20038286.

[2] The SSR command structure shall conform to DFCB, IS20008658.

3.7.6.3 Telemetry

The SSR shall comply with telemetry in accordance with Appendix II.

3.7.6.4 FDIR

[1] The SSR health check shall perform a BIT sequence to support diagnostics.

[2] The SSR shall provide data correction activity in telemetry.

3.7.6.5 Bit Error Rate

The SSR BER shall contribute no more than 1 times 10^{-9} to the Instrument science data collected during any half orbit.

3.7.6.6 Functional Requirements

3.7.6.6.1 Input

a. Commands received via the BDU

b. Science Data from the SFE

c. H/K telemetry playback sent to the CTIU for forwarding to the S–band transponders

3.7.6.6.2 Processing Requirements

3.7.6.6.3 General

[1] The SSR shall provide storage management for:

a. H/K telemetry recording, storage and playback

b. Science recording, storage and playback.

[2] The SSR shall simultaneously record and play back data via an interface with the SFE while simultaneously recording or playing back data via an interface with the CTIU interface.

[3] The SSR shall play back all or a segment of stored data.

3.7.6.6.4 H/K Telemetry Storage, Recording and Playback

[1] The SSR shall provide redundant record and playback interfaces to each of the CTIUs.

[2] The SSR interfaces with the active CTIU shall be maintained in the C&DHS's lowest power state.

[3] Each interface between the recorder and CTIUs shall consist of a serial clock and a data line that is NRZ-L format.

[4] The SSR shall be required to operate in the H/K telemetry recording state during launch.

3.7.6.6.5 Science Data Storage, Recording and Playback

[1] The SSR shall record at an aggregate rate of 150 Mbps.

[2] The SSR shall play back to the SFE at a data stream rate of up to 37.5Mbps per data line or an aggregate of 150 Mbps.

[3] The science data storage shall not be operational during launch.

[4] The SSR shall provide logically separate buffers for each VCID or sets of related VCIDs, and shall store incoming VCDUs in the corresponding buffer.

[5] The SSR shall provide the capability to playback the contents of each buffer sequentially.

3.7.6.6.6 Output

a. SSR telemetry [H/K telemetry, H&S telemetry]

b. Science Data playback to the SFE

c. H/K telemetry playback to the CTIU

3.7.6.7 Size

The SSR shall consist of two DCUs and no more than 5 DMUs with a maximum envelope as specified SSR ICD 20038286.

3.7.6.8 Interface

[1] The SSR architecture shall be single–fault tolerant

[2] The SSR shall interface with the BDU to provide a path for commanding the SSR and gathering the SSR internal telemetry data.

[3] The SSR shall provide a redundant interface for pulsed Power On/Off commands.

3.7.6.8.1 SSR BDU Interface

[1] The SSR shall utilize interfaces with its BDU for data transfer, control and monitor functions, and telemetry sampling.

[2] The SSR shall receive commands for power control and reset from the BDU interface.

3.7.6.8.2 Thermal

The primary method of heat dissipation shall be conductive to the base plate.

3.7.7 Flight Software System (FSWS)

3.7.7.1 SCC–Based FSWS

3.7.7.1.1 Provided Services

[1] The SCC–based FSWS system shall provide the C&DHS with all services specified herein throughout all mission phases.

[2] The SCC–based FSWS shall perform the following monitoring for the C&DHS.

a. IMOK

b. SCC temperature

[3] The SCC–based FSWS shall provide the following Relative Time Command Sequence (RTCS) for the C&DHS:

a. to transition the C&DHS from its science mode to its survival mode,

b. to transition the C&DHS from its standby mode to its survival mode,

c. to transition the C&DHS from its science mode to its standby mode.

d. BDU redundancy switch–over.

3.7.7.1.2 Telemetry

[1] The SCC–based FSWS shall generate sufficient housekeeping data in the downlinked telemetry stream to allow ground controllers to assess the operational state of the SCC, monitor critical functions and aid in fault detection and correction.

[2] The SCC–based FSWS shall generate data in the downlink telemetry streams sufficient to support ground controller monitoring and logging of SCC resources, its configuration/reconfiguration and its significant events.

[3] The SCC–based FSWS shall utilize the C&T bus to transmit its telemetry data for inclusion in the H/K telemetry and H&S telemetry.

[4] The SCC–based FSWS shall generate telemetry commensurate with its current operational state.

3.7.7.2 FDIR

[1] The active SCC–based FSWS health check shall perform a health check to support diagnostics.

[2] The standby SCC–based FSWS health check shall perform a health check to support diagnostics.

[3] The active SCC shall provide data indicating the corrective action(s) taken in telemetry.

3.7.7.3 High Speed Serial I/O Interfaces

3.7.7.3.1 Serial Interface Management Function

The SCC–based FSWS shall provide status of the high speed serial interfaces as part of its telemetry.

3.7.7.3.1.1 Active SCC–Based FSWS Initialization and Configuration

The active SCC–based FSWS, based on resident configuration data, shall establish the high speed serial I/O interfaces between the active CTIU and itself as part of transitioning the SCC to an active operational state.

3.7.7.3.1.2 Verification of High Speed Electronic Interface

The SCC–based FSWS shall re–transmit a loopback message over the SCC–to–CTIU upon receipt of a loop–back on the CTIU–to–SCC interface.

3.7.7.3.1.3 Serial Interface CTIU–to–SCC Functions

3.7.7.3.1.3.1 Input

a. H/K telemetry

b. SCC closed loop data from Spacecraft components

3.7.7.3.1.3.2 Processing Requirements

3.7.7.3.1.3.2.1 Nominal Processing

[1] Nominal processing shall provide accepting, decoding, validating and distributing the input data streams (H/K telemetry, SCC closed loop data) as required.

[2] The SCS–based FSWS shall support message validation and acknowledgment as specified for the high speed serial I/O interface in FSWS IRD, 20039967.

3.7.7.3.1.3.2.2 Exception Processing

a. Any message rejection shall be reported in telemetry.

b. Any interface problem shall be reported in telemetry.

3.7.7.3.1.3.2.3 Output

a. Serial interface status in housekeeping telemetry

3.7.7.3.1.4 Serial Interface SCC–to–CTIU Functions

3.7.7.3.1.4.1 Input

a. SCC closed loop commands, stored command table, relative time command sequences, FDIR commands, commands resulting from Telemetry Monitoring

b. Ancillary data packet

c. SCC OK message

3.7.7.3.1.4.2 Processing Requirements

[1] Command data transfers:

a. The SCC–based FSWS shall support the data message interface protocol data for message headers and trailers, message validation and acknowledgment as specified for the high speed serial link in FSWS IRD, 20039967.

b. Messages distributed by the CTIU to Spacecraft equipment:

1. All messages shall look the same once the message protocol is removed whether they are transmitted over the high speed serial I/O interface or the uplink (forward service link)

2. Messages, such as one only between the active SCC and active CTIU, shall contain a command structure which includes a 1553B command word.

c. The SCC–based FSWS shall ensure all command data transfers delivered to the CTIU are in–order.

d. The SCC–based FSWS shall perform command data transfer flow control and prioritization among command data transfers.

[2] Command data transfers containing commands:

a. The SCC–based FSWS shall distribute commands to the Spacecraft equipment at a data rate with respect to the SCC–based FSWS command data transfer distribution specified in paragraph 3.2.1.1.3.2.

b. The SCC–based FSWS shall ensure commands it transmits to the CTIU for delivery within the same minor cycle have different RT addresses.

c. The SCC–based FSWS shall ensure relay drive commands to the same recipient are spaced to allow time for a preceding relay drive command to complete.

[3] Command data transfer containing an ancillary data packet:

a. The SCC–based FSWS shall generate the ancillary data packet as specified in Section 6 of the GSFC 420–03–02 with respect ancillary data content and packet format.

b. The SCC–based FSWS shall ensure the ancillary data packet is delivered to the CTIU in minor cycle N–3 where the first ancillary data packet is scheduled by the bus utilization table to be delivered to an Instrument in minor cycle N+1.

[4] Command data transfers containing SCC OK message:

a. The SCC–based FSWS shall:

1. perform a health check over hardware
2. perform a health check over SCC–based FSWS
3. only transmit the SCC OK message to the CTIU if health check positive
4. repeat this health check every 1.024 seconds.

b. The SCC FSWS shall ensure the SCC OK message is delivered to the CTIU no later than minor cycle N–3 where the first IMOK message is scheduled by the bus utilization table to be delivered to a recipient in minor cycle N+1.

c. The SCC–based FSWS shall prepare the IMOK messages as specified in FSWS IRD, 20039967, for both the ACE and PDU as separate command data transfer containing commands to the CTIU for distribution.

d. The SCC–based FSWS shall ensure the IMOK messages are received at the expected time by the ACE and PDU respectively.

3.7.7.3.1.4.3 Output

a. Command data transfers containing commands

b. Command data transfer containing ancillary data packet

c. Command data transfers containing SCC OK message if health test results are positive

d. Command data transfers containing safe mode commanding if IMOK is not received when expected

3.7.7.4 SCC's C&T Bus Embedded RT

3.7.7.4.1 Power–up Initialization and Configuration

[1] The SCC–based FSWS shall re–initialize its C&T RT upon command.

[2] During the RT initialization, the SCC–based FSWS shall set the busy bit in the RT status word as early as possible to prevent the C&T message traffic from being processed.

[3] Upon completion of the successful initialization, the SCC–based FSWS shall reset the busy bit.

3.7.7.4.2 Input

a. Commands for SCC (T/R=Receive, RT subaddress =1)

b. Mode code commands (T/R=Receive, RT subaddress=0 or 31) (T/R=Transmit, RT subaddress=0 or 31) of which synchronize with data word (T/R=Receive, RT subaddress=31) is one

c. Memory Loads (T/R=Receive, RT subaddress=2)

d. IMOK (T/R=Receive, RT subaddress=5)

e. Time Code (T/R=Receive, RT subaddress=6)

f. C&DHS safe mode commanding (T/R=Receive, RT subaddress=7)

g. Loop–back (T/R=Receive, RT subaddress=9) and data gather request (T/R=Transmit, RT subaddress=9)

h. Data gather request (T/R=Transmit) (memory dump data: RT subaddress=2, H/K telemetry: RT subaddress=17, H&S telemetry: RT subaddress=18)

3.7.7.4.2.1 Processing Requirements

[1] Host responsibility for an embedded RT:

a. The SCC–based FSWS shall utilize the C&T bus to receive and transmit data between the itself and the active CTIU as specified in Table XVI, Functionality of SCC's Operational States.

b. During initialization of the C&T RT, the busy bit shall be asserted by the host until it is ready to accept C&T bus messages.

c. The SCC–based FSWS shall monitor the C&T RT message transactions.

d. The host shall report the C&T bus related problems in its telemetry.

e. The SCC C&T RT shall store validated messages in memory accessible to the SCC–based FSWS if the T/R=Receive in the 1553B command word.

f. The SCC–based FSWS shall allow a minimum of 100 μsecs for a possible re–transmission before routing the C&T RT stored message content for subsequent processing and also route it in sufficient time before the next possible message overwrites this data.

g. The SCC–based FSWS shall store data for transmission to the CTIU in memory accessible to C&T RT prior to minor cycle N–1 when the data is expected to be gathered in minor cycle N and not overwrite that memory until minor cycle N+1 has occurred.

[2] The SCC–based FSWS shall performing memory loads as specified in DFCB, IS2008658

[3] IMOK Message:

a. The receipt of an C&DHS safe mode command issued by the active CTIU shall be interpreted by the active SCC–based FSWS that the CTIU did not receive the SCC OK message in more than 2.048 seconds.

b. The absence of the IMOK message shall cause the active SCC–based FSWS to issue safe mode commands.

[4] Synchronization with active CTIU cycles.

a. The SCC–based FSWS shall maintain synchronization to the active CTIUs cycles.

b. Upon receipt of the synchronize with data word mode code command, the SCC–based FSWS shall (a) adjust it leading edge of its minor cycle if required and (b) compare its major/minor cycle count with the one in the data word and use the one in the data word if there is a difference.

[5] The SCC–based FSWS shall use the C&DHS provided standard time service.

[6] The SCC–based FSWS shall conform to the memory load and memory dump conventions specified in Sections 5 and 6 of the DFCB, IS20008658.

[7] The SCC–based FSWS shall sample and route H/K telemetry and H&S telemetry to the C&T RT.

3.7.7.4.2.1.1 Output

Nominally, a 1553B response is always a status word and additional 1553B data words as required.

a. H/K telemetry

b. H&S telemetry

c. Diagnostic

d. Loop–back

e. 1553B mode code response

3.7.7.5 CTIU Firmware

[1] The CTIU firmware shall utilize the bus utilization table.

[2] The CTIU firmware shall interface with the following electronic interfaces:

a. serial I/O interfaces between the SCC and CTIU

b. C&T bus as a BC and a RT

c. LRS bus as a RT

d. S–band transponder interfaces.

[3] The CTIU firmware shall interface with the CTIU hardware specified in the CTIU Component Specification, PS20008569.

[4] The CTIU firmware shall validate uplink command data transfers by implementing the FARM as specified in DFCB, IS20008658.

[5] The CTIU firmware shall only perform functions commensurate with its operational state.

[6] The CTIU firmware shall enable/disable all CTIU autonomous functions upon command.

[7] The CTIU firmware shall maintain the master Spacecraft clock.

[8] The CTIU firmware shall accept, decode and distribute command data transfers.

[9] The CTIU firmware shall deliver command data transfers it receives for other Spacecraft equipment.

[10] The CTIU firmware shall execute CTIU commands contained in command data transfers or in C&T bus messages as specified in Appendix I.

[11] The CTIU firmware shall support data sampling by the BDUs by delivering the BDU sample schedule tables.

[12] The CTIU firmware shall perform data gathering by delivering the data gather requests.

[13] The CTIU firmware shall format and distribute the gathered data as required herein.

[14] The CTIU firmware shall generate CTIU telemetry as specified in Appendix II.

[15] The CTIU firmware shall generate time code message and deliver it to designated recipients.

[16] The CTIU firmware shall generate the synchronize with data word mode and deliver it to designated recipients.

[17] The CTIU firmware shall (a) accept the ancillary data packet from the SCC–based FSWS, (b) deliver the ancillary data packet and (c) distribute the ancillary data packet for inclusion in the low–rate science data stream.

[18] The CTIU firmware shall (a) accept the SCC OK message from the SCC–based FSWS (b) process the message and (c) deliver the IM OK messages or if sufficient time has elapsed since the last SCC OK was received perform C&DHS safe mode commanding.

[19] The CTIU firmware shall generate safe mode commands and deliver the safe mode commands upon command.

[20] The CTIU firmware shall perform memory loads per the conventions specified in DFCB, IS20008658.

[21] The CTIU firmware shall support memory dump gathering of other Spacecraft equipment per the conventions specified in DFCB, IS20008658.

[22] The CTIU firmware shall dump its memory on command.

[23] The CTIU firmware shall execute a predetermined procedure upon receipt of CTIU reset commands.

[24] The CTIU firmware shall provide status information which includes periodic fault detection data in telemetry.

[25] The CTIU firmware shall update the CTIU OK timer every 1.024 seconds.

[26] Upon command, the CTIU firmware shall implement pre–planned diagnostic procedures which includes check–out and FDIR procedures.

[27] The CTIU firmware shall gather the PN epoch data for inclusion in telemetry.

[28] The CTIU firmware shall gather the Doppler measurement data for inclusion in telemetry.

[29] The CTIU firmware shall perform the monitoring of the MO frequency.

4 QUALITY ASSURANCE PROVISIONS

[1] The requirements for the formal verification of the performance, design, and construction of the C&DHS shall be as specified in this section. These requirements define the extent to which the C&DHS must demonstrate capability to meet the design and performance requirements specified in Sections 3.2 and 3.3 of this document.

[2] The C&DHS design shall be reviewed in support of the Spacecraft Flight Assurance Review Program defined in the PAIP, Section 2, Assurance Review Requirements. The basis for the C&DHS verification program implementation is the Spacecraft Verification Plan, PN20005404, the Spacecraft Verification Specification, PS20005404, and the Spacecraft Comprehensive Test Plan, PN20008664. The C&DHS verification program includes an engineering development effort designed to validate the appropriateness of the hardware design approach. Development includes the building and testing of breadboards, Engineering Development Models (EDM), Engineering Test Models (ETM), Protoflight Models, and Qualification Test Models of selected designs to verify circuit development, function evaluation, life of critical elements (tape), stability studies and interface performance. Development will not constitute verification, although data from development tests will be used to support verification activities.

Breadboards for the C&DHS will provide the basis for interface verification, stability and transient analysis, and design verification. ETMs will be used to develop and confirm the performance, packaging and manufacturing concepts. Protoflights will be used to verify the components' performance worst case performance capabilities during environmental exposure.

4.1 Command and Data Handling Subsystem Verification

Verification of each requirement shall be performed as defined in the Verification Matrix, Attachment A, of this specification (provided under separate cover).

4.1.1 Verification Phases

Phases shall be either Acceptance or Qualification as defined in PS20005404.

4.1.2 Verification Methods

The following methods shall be used as specified in the verification matrix to verify each of the requirements in Section 3: Demonstration, Test, Analysis, and/or Inspection. Each method shall be as defined in PS20005404.

4.2 Testing

4.2.1 Reliability Testing

The SSR shall perform life testing which shall ensure life requirements are met.

4.2.2 Engineering Evaluation and Test Requirements

The ETM components shall meet the form, fit and functional requirements of the flight unit.

4.2.3 Acceptance testing

Acceptance testing shall be performed on all flight components to verify workmanship and functionality. The acceptance test levels are defined in PS20005404, Section 4.

4.2.4 Qualification testing

Qualification testing of Qualification Test Model (QTM) of the SSR shall be used to demonstrate adequacy of design limits. The qualification test levels are defined in PS20005404, Figures 1 and 2.

4.2.5 Protoflight Testing

Protoflight test hardware shall be used for qualification testing and shall be identical in configuration and production processing to flight hardware. Protoflight tests, where specified, shall consist of qualification level exposure of the first flight article for acceptance level durations (time and/or cycles).

The SCC, CTIU, BDU and SFE shall have protoflight units.

4.2.6 Installation testing and checkout

Installation testing and checkout such as continuity, interface mating, support equipment compatibility, and documentation verification shall be done in accordance with the GIS, IS20008501, and the Comprehensive Test Plan, PN20008664.

4.2.7 Test Equipment Verification

Unless otherwise specified herein, instruments and test equipment used to measure C&DHS performance characteristics shall be in accordance with the verification plan, PN20005404.

4.2.8 Verification Conditions

Ambient test conditions shall be per Table V of the EOS Verification Specification, PS20005404. Test tolerances shall be per Table VI of PS20005404.

4.3 Verification Documentation

The subsystem verification activities shall be documented in:

a. Verification Reports as defined in PS20005404.

b. Test procedures

c. Test logs

d. Test Review Board meeting minutes

4.3.1 Responsibility for Verification

Astro Space shall verify each requirement specified in this document.

5 PREPARATION FOR DELIVERY

The C&DHS equipment shall be handled, packaged, and transported in accordance with Astro Space's PAIP, 20005397, Section 8.21.

(This page intentionally left blank.)

6 NOTES

6.1 Definitions

6.2 Acronyms and Abbreviations

ACE	Attitude Control Electronics
Assy	Assembly
BC	Bus Controller
BDU	Bus Data Unit
BER	Bit Error Rate
BOL	Beginning of Life
bps	bits per second
C	Celsius
C&DHS	Command and Data Handling Subsystem
C&T	Command and Telemetry
CADU	Channel Access Data Unit
CCSDS	Consultative Committee for Space Data Systems
CEI	Contract End Item
CG	Center of Gravity
CLCW	Command Link Control Word
CLTU	Command Link Transmission Unit
CMD	Command
CMS	Contamination Monitoring Subsystem
COMS	Communications Subsystem
COP–1	Command Operation Procedure–1
CSCI	Computer Software Configuration Items
CTEU	Command and Telemetry Execution Unit
CTIU	Command and Telemetry Interface Unit
DAS	Direct Access System
dc	direct current
dB	Decibel
DB	Direct Broadcast

DCU	Data Control Unit
DDL	Direct Downlink
DFCB	Data Format Control Book
DMU	Data Memory Unit
DP	Direct Playback
EAS	Electrical Accommodation Subsystem
ECL	Emitter Coupled Logic
EOSDIS	EOS Data and Information System
EOL	End of Life
EMC	Electromagnetic Compatibility
EMI	Electromagnetic Interference
EOT	End–of–Table
EPS	Electrical Power System
ESD	Electrostatic Discharge
FSE	Flight Support Equipment
FSWS	Flight Software Subsystem
g	Acceleration of Gravity
Gbit	Giga–bit
GE–ASD	General Electric Company, Astro–Space Division
GFE	Government Furnished Equipment
GFP	Government Furnished Property
GIIS	General Instrument Interface Specification
GIS	General Interface Specification
GLP	Government Loaned Property
GN&C	Guidance, Navigation, and Control
GN&CS	Guidance, Navigation, and Control Subsystem
GSE	Ground Support Equipment
I/O	Input/Output
ID	Identification
HGA	High Gain Antenna
HSS	High Speed Serial
HW	Hardware

Hz	Hertz
ICD	Interface Control Document
IMC	Intermodule Connector
I/O	Input/Output
IPM	Internal Propulsion Module
IRD	Interface Requirements Document
kbps	kilobits per second
kHz	Kilohertz
lbs	pounds
LPC	Load Power Conditioner
LRS	Low Rate Science
LV	Launch Vehicle
Mbps	Megabits per second
MHz	Megahertz
MPDU	Multiplexed Protocol Data Unit
MS	Margin of Safety
msec	milliseconds
NA	Not Applicable
NASA	National Aeronautics and Space Administration
NRZ–L	Non–Return to Zero – Low
NRZ–M	Non–return to Zero: Mark
nsecs	nano–seconds
PAIP	Product Assurance Implementation Plan
PAR	Product Assurance Requirements
PB	Playback
PCA–PDU	Physical Channel Access Protocol Data Unit
P/L	Payload
PDU	Protocol Data Unit, Power Distribution Unit
PN	Pseudo–Noise
PROPS	Propulsion Subsystem
Ps	Probability of Success
PSC	Premodulation Signal Conditioner

RD	Requirements Document
RF	Radio Frequency
RFI	Radio Frequency Interference
RT	Remote Terminal
RTCS	Relative Time Command Sequence
RWA	Reaction Wheel Assembly
SA	Solar Array
SAD	Solar Array Drive
SCC	Spacecraft Controls Computer
SCS	Spacecraft Checkout Station
SFE	Science Formatting Equipment
SGE	Structure Ground Electrode
SIC	Standard Interface Connector
SMS	Structure and Mechanisms Subsystem
SPG	Single Point Ground
SSR	Solid State Recorder
SW	Software
T/R	Transmit/Receive
TBD	To Be Determined
TBR	To Be Reviewed
TBS	To Be Specified
TCS	Thermal Control Subsystem
TDRSS	Tracking and Data Relay Satellite System
TLM	Telemetry
TM&F	Time Mark and Frequency
TONS	TDRSS On–board Navigation System
UIID	Unique Instrument Interface Document
usec	microseconds
USCCS	User Spacecraft Clock Calibration System
VCID	Virtual Channel Identification
XPD	S–band Transponder

6.3 Exceptions to the GIS and GSFC 420–03–02

Not Applicable

6.4 Requirements Traceability Matrix

Command and data handling requirements in the C&DHS flow from the CEI specification, PS20005396. The C&DHS Requirement Traceability Matrix is shown in Attachment B (provided under separate cover).

(This page intentionally left blank.)

APPENDIX I

10 COMMAND REQUIREMENTS

These are the C&DHS commands that will be in the ground data base and used by the Flight Operations Team.**(TBR–8)**

10.1 SCC Commands

10.1.1 Hardware Commands to SCC

Function Name	GIS Signal Type
SCC ON	Relay Drive
SCC OFF	Relay Drive
Reset/Bootstrap	Point-to-Point Logic Level

10.2 CTIU Commands

10.2.1 CTIU to CTIU

Table XXIX. CTIU Relay Commands

Component	Command
CTIU 1 to CTIU 2	REMOTE RESET
CTIU 1 to CTIU 2	REMOTE TIMER DISAB
CTIU 1 to CTIU 2	REMOTE I/F DISAB
CTIU 1 to CTIU 1	TIMER ENAB
CTIU 1 to CTIU 1	I/F ENAB

10.2.2 Spacecraft

Table XXX. Spacecraft Relay Commands

Component	Command
COMMS/C&DH BDU	SIDE 1 ON
	SIDE 1 OFF
	SIDE 2 ON
	SIDE 2 OFF
DAS BDU	SIDE 1 ON
	SIDE 1 OFF
	SIDE 2 ON
	SIDE 2 OFF
SSR BDU	SIDE 1 ON
	SIDE 1 OFF
	SIDE 2 ON
	SIDE 2 OFF
GN&C BDU	SIDE 1 ON
	SIDE 1 OFF
	SIDE 2 ON
	SIDE 2 OFF
RWA BDU	SIDE 1 ON
	SIDE 1 OFF
	SIDE 2 ON
	SIDE 2 OFF
PROP BDU	SIDE 1 ON
	SIDE 1 OFF
	SIDE 2 ON
	SIDE 2 OFF
POWER BDU	SIDE 1 ON
	SIDE 1 OFF
	SIDE 2 ON
	SIDE 2 OFF

10.2.3 Instrument

Table XXXI. Instrument Relay Commands

Component	Command
BDU	SIDE 1 ON
	SIDE 1 OFF
	SIDE 2 ON
	SIDE 2 OFF
BDU	SIDE 1 ON
	SIDE 1 OFF
	SIDE 2 ON
	SIDE 2 OFF
BDU	SIDE 1 ON
	SIDE 1 OFF
	SIDE 2 ON
	SIDE 2 OFF

10.2.4 CTIU Internal Commands

Table XXXII. CTIU Internal Commands

Component	Command
CTIU	TM&F BUS 1 ON/OFF
	TM&F BUS 2 ON/OFF
	1553 CONFIGURATION
	PN EPOCH SELECTION 1/2

10.3 BDU Commands

10.4 SFE Commands

Note: The command format is specified in ICD20008575, as well as any additional commands that may be required.

Command List – Discrete Relay Drive

Function	Definition
SFE A ON–B OFF	Apply power to SFE–A power conditioner
SFE B ON–A OFF	Apply power to SFE–B power conditioner
SFE A OFF–B OFF	Remove power to SFE A and B circuits

Command List – 16–Bit Serial Word

Function	Definition
Select A/B ports of high–rate interfaces	Individually selects the A or B side of instruments.
Select A/B Science Bus	Selects the primary 1553B bus, A or B
Select BC–A	Selects the A BC stubs
Select BC–B	Selects the B BC stubs
Setup polling sequence	Define the RT polling sequence table
Select A/B SSR interface	Selects the active controller A or B of SSR
Select SSR P/B rate	Selects the P/B rate as 75 Mbps or 150 Mbps
Select A/B KSA Mod	Selects the active KSA modulator
Select A/B DAS Mod	Selects the active DAS modulator
Select input to CH1–KSA	Selects the CADU data to be transmitted over CH1–KSA
Select input to CH2–KSA	Selects the CADU data to be transmitted over CH2–KSA
Select input to CH1–DAS	Selects the CADU data to be transmitted over CH1–DAS
Select input to CH2–DAS	Selects the CADU data to be transmitted over CH2–DAS
SFE internal configuration	Select internal redundancy of SFE
Execute BIT	Initiate the 30–second (TBR) Built–In Test Function

10.5 SSR Commands

Discrete Command List

Function	Definition
SSR ON	Apply power to SSR circuits
SSR OFF	Remove power from SSR circuits

Serial Command List and Bit Pattern – 16-Bit Words

Function	Binary Code MSB LSB	Hex Code
Operating Mode Commands:		
Low Power	xxxxxxxxxxxxxxxx	xxxx
SFE Standby	xxxxxxxxxxxxxxxx	xxxx
SFE Record	xxxxxxxxxxxxxxxx	xxxx
SFE Record Disable	xxxxxxxxxxxxxxxx	xxxx
SFE Playback	xxxxxxxxxxxxxxxx	xxxx
SFE Playback Disable	xxxxxxxxxxxxxxxx	xxxx
SFE Replay	xxxxxxxxxxxxxxxx	xxxx
SFE Replay Disable	xxxxxxxxxxxxxxxx	xxxx
CTIU Record	xxxxxxxxxxxxxxxx	xxxx
CTIU Record Disable	xxxxxxxxxxxxxxxx	xxxx
CTIU Playback @ 256 Kbps	xxxxxxxxxxxxxxxx	xxxx
CTIU Playback @ 512 Kbps	xxxxxxxxxxxxxxxx	xxxx
CTIU Playback Disable	xxxxxxxxxxxxxxxx	xxxx
Built–In Test	xxxxxxxxxxxxxxxx	xxxx
Built–In Test Abort	xxxxxxxxxxxxxxxx	xxxx
Custom Memory Configuration	xxxxxxxxxxxxxxxx	xxxx
Default Memory Configuration	xxxxxxxxxxxxxxxx	xxxx

NOTE: xxxxxxxxxxxxxxxx – Denotes code is TBD.

APPENDIX II

20 TELEMETRY REQUIREMENTS

The subsystem shall operate using no more than 67 bps in the H&S telemetry and no more than 3589 bps in the H/K telemetry. These are the C&DHS telemetry points that will be in the H&S telemetry and H/K telemetry.**(TBR–9)**

20.1 SCC Telemetry:

Table XXXIII. SCC Telemetry Interfaces

FUNCTION	GIS TYPE	H&S Rate	H/K Rate
SCC Pwr On	Passive Bi–level	1	8
SCC OK	Active Bi–level	–	8
SCC VOut	Active Analog	1	8
SCC CPU Temperature	Passive Analog	–	8

20.2 CTIU Telemetry

Table XXXIV. CTIU Telemetry

Source	Functional Name	Operation	H&S Rate	H/K Rate
CTIU Fault Logic	CTIU Fault Status	CTIU Fault Status	8	8
Up Link Logic	Control Regis	Configuration and Status	1	8
SCC Interface	Control Regis	Configuration and Status	1	8
Down Link Logic	Config Regis	Configuration	–	8
	Status Regis	Status	1	8
	Channel Routing	Configuration	1	8
TM&F Status	Control	Configuration and Status	1	8
CLCW(active)	Control	FARM	–	64
CLCW(standby)	Control	FARM	32	64

20.3 BDU Telemetry

FUNCTION	GIS TYPE	H&S Rate	H/K Rate
VOut	Active Analog	1	8
Temperature	Passive Analog	1	1

20.4 SFE Telemetry

Function	Indication	H&S Rate	H/K Rate
Serial Telemetry – 8–Bit Serial Word(s)		–	8
High–rate interface status	A–side/B–side active for 6 ports		
High–rate interface performance	Specified in ICD 20008575		
Science Bus status	A–bus/B–bus primary and BC stub		
Science Bus performance	Poll sequence, error log etc.		
SSR Record interface status	A–side/B–side active, ready, etc.		
SSR P/B interface status	A–side/B–side active, clock, etc.		
KSA modulator status	A–side/B–side active		
DAS modulator status	A–side/B–side active		
CH1–KSA connection	CH1–KSA mod CADU assignment		
CH2–KSA connection	CH2–KSA mod CADU assignment		
CH1–DAS connection	CH1–DAS mod CADU assignment		
CH2–DAS connection	CH2–DAS mod CADU assignment		
Built–In–Test Flag	Go/No–Go		
Internal Function Status	Specified in ICD 20008575		
Passive Bi–level Telemetry			
SFE power status	SFE–A/B ON or OFF	1	8
Analog Telemetry			
Power Supply Voltages	Specified in ICD 20008575	–	8
SFE internal temperatures	Specified in ICD 20008575	–	8

20.5 SSR Telemetry

Function	H&S Rate	H/K Rate
Serial Telemetry List	–	8
Mode(s) Status Indicator(s):		
Low Power		
SFE Record		
SFE Playbackf		
SFE Replay		
CTIU Record		
CTIU Playback		
Built-In Test		
Input Line Current		
Built-In Test Result		
Error Correction Activity		
Total BER Performance		
SFE Playback Clock Status		
Command Error Status		
Buffer Size		
Buffer Utilization		
Internal Function 1 : Internal Function N		
Passive Bi–Level		
On/Off	1	8

(This page intentionally left blank.)

APPENDIX III

30 REQUIREMENTS CROSS REFERENCE

Section	Pg	Component	Subsystem
3.1.5.1.1	19	CTIU	COMS
3.1.5.1.2 [1]	19	CTIU	COMS
3.1.5.1.2 [2]	19	CTIU	COMS
3.1.5.1.2 [3]	19	CTIU	COMS
3.1.5.1.2 [4]	22	CTIU	COMS
3.1.5.1.3 [1]	22	All Components	EPS
3.1.5.1.3 [2]	22	All Components	EPS
3.1.5.1.3 [3]	22	All Components	EPS
3.1.5.1.3 [4]	22	All Components	EPS
3.1.5.1.4 [1]	22	All Components	TCS
3.1.5.1.4 [2]	22	All Components	TCS
3.1.5.1.4 [3]	22	All Components	TCS
3.1.5.1.4 [4]	22	All Components	TCS
3.1.5.1.5	22	CTIU, BDU	GN&CS, SCC–based FSWS
3.1.5.1.6 [1]	22	All Components	SMS
3.1.5.1.6 [2]	22	All Components	SMS
3.1.5.1.7	22	CTIU, BDU	PROPS
3.1.5.1.8	23	All Components	EAS
3.1.5.1.9	23	All Components	SCC–based FSWS
3.1.5.1.10	24	CTIU	LV
3.1.5.1.11[1]	24	All Components	Instruments
3.1.5.1.11[2]	24	All Components	Instruments
3.1.5.1.12	24	CTIU, SSR, SFE	EOSDIS
3.1.5.1.13 [1]	24	All Components	SCS
3.1.5.1.13 [2]	24	All Components	SCS
3.1.5.2	24	All Components	
3.1.5.2.1[1]	24	All Components	EPS, EAS
3.1.5.2.1 [2]	24	All Components	EPS, EAS
3.1.5.2.1 [3]	24	All Components	EPS, EAS
3.1.5.2.1.1a.	24	CTIU, BDU	
3.1.5.2.1.1b.	25	CTIU	
3.1.5.2.1.1c.	25	SFE	
3.2.1.1 [1] a. b.	25	CTIU	COMS
3.2.1.1 [1] a. b.	25	CTIU	SCC–based FSWS

Section	Pg	Component	Subsystem
3.2.1.1 [2]	25	CTIU, BDU	
3.2.1.1.1 [1]	26	CTIU	COMS, FOT
3.2.1.1.1 [2]	26	CTIU	SCC–based FSWS
3.2.1.1.2 [1] a.	26	CTIU	COMS
3.2.1.1.2 [1] b. c. d.	26	CTIU	FOT
3.2.1.1.2 [2]	26	CTIU	FOT
3.2.1.1.2 [3]	26	CTIU	FOT
3.2.1.1.2 [4]	26	CTIU	FOT
3.2.1.1.2 [5]	26	CTIU	SCC–based FSWS
3.2.1.1.2 [6]	26	CTIU, BDU	COMS
3.2.1.1.3 [1] a.	26	CTIU, BDU	
3.2.1.1.3 [1] b.	b.	CTIU, BDU	FOT, S/C Equipment, SCC–based FSWS
3.2.1.1.3 [1] c.	27	CTIU, BDU	
3.2.1.1.3 [1] d.	27	CTIU, BDU	
3.2.1.1.3 [1] e.	27	CTIU, BDU	FOT, S/C Equipment, SCC–based FSWS
3.2.1.1.3 [2]	27	CTIU	
3.2.1.1.3 [3]	27	CTIU	
3.2.1.1.3 [4]	27	CTIU	
3.2.1.1.3 [5]	27	CTIU	
3.2.1.1.3.1 [1]	27	CTIU	
3.2.1.1.3.1 [2]	27	CTIU	
3.2.1.1.3.1 [4]	27	CTIU	
3.2.1.1.3.2 [1]	27	CTIU	
3.2.1.1.3.2 [2]	27	CTIU	
3.2.1.1.3.2 [3]	27	CTIU, BDU	SCC–based FSWS
3.2.1.1.3.2 [4]	27	CTIU, BDU, SFE, SSR	SCC–based FSWS
3.2.1.1.4.1 [1]	28	CTIU, BDU, SFE, SSR	
3.2.1.1.4.1 [2]	28	CTIU, BDU, SFE, SSR	
3.2.1.1.4.2 [1]	28	CTIU, BDU, SFE, SSR	
3.2.1.1.4.2 [2]	28	CTIU, BDU, SFE, SSR	
3.2.1.1.4.2.1 [1]	28	CTIU, BDU	
3.2.1.1.4.2.1 [2]	28	CTIU, BDU	
3.2.1.1.4.3 [1]	28	All Components	
3.2.1.1.4.3 [2]	28	All Components	
3.2.1.1.4.3 [3]	28	All Components	
3.2.1.1.4.3 [4]	29	All Components	

Section	Pg	Component	Subsystem
3.2.1.1.4.3 [5]	29	All Components	
3.2.1.1.4.3 [6] a.,b.	29	CTIU, BDU	
3.2.1.1.4.3 [7]	29	All Components	
3.2.1.1.4.4 [1]	29	CTIU, SFE, SSR	
3.2.1.1.4.4 [2]	29	CTIU, BDU	
3.2.1.1.4.5	29	CTIU, BDU, SFE, SSR	
3.2.1.1.4.6	29	CTIU, BDU, SFE, SSR	
3.2.1.1.4.7	29	CTIU, BDU, SFE, SSR	
3.2.1.1.4.8	29	CTIU, BDU, SFE, SSR	
3.2.1.2 [1] a.–b,	29	CTIU, BDU, SSR, SFE	
3.2.1.2 [2]	29	CTIU	
3.2.1.2 [3]	30	CTIU	
3.2.1.2 [4]	30	CTIU, BDU, BUT	
3.2.1.2 [5] a.–b.	30	CTIU, SFE, SSR, BUT	SCC–based FSWS
3.2.1.2 [6]	30	CTIU, BUT	
3.2.1.2 [7]	30	CTIU, BUT	
3.2.1.2 [8]	30	CTIU, BUT	SCC–based FSWS
3.2.1.2 [9]	30	CTIU	
3.2.1.2.1 [1]	31	BDU	
3.2.1.2.1 [2]	31	CTIU, BUT	
3.2.1.2.1 [3]	31	CTIU, BDU	
3.2.1.2.1.1 [1] a.–f.	31	All Components	
3.2.1.2.1.1 [2]	32	All Components	
3.2.1.2.1.1 [3]	32	CTIU	
3.2.1.2.1.1 [4]	32	All Components	
3.2.1.2.1.1 [5]	32	All Components	
3.2.1.2.1.1 [6]	32	CTIU	
3.2.1.2.2 [1]	32	CTIU, BDU	
3.2.1.2.2[2]	32	CTIU, BUT	
3.2.1.2.2.1[1]	32	CTIU	
3.2.1.2.2.1[2]	33	CTIU	
3.2.1.2.2.1[3]	33	CTIU	
3.2.1.2.2.1[4]	33	CTIU	
3.2.1.2.2.1[5]	33	CTIU	
3.2.1.2.2.1[6]	33	CTIU	
3.2.1.2.3.1 [1]	33	CTIU	
3.2.1.2.3.1 [2]	33	CTIU	

Section	Pg	Component	Subsystem
3.2.1.2.3.1 [3]	33	CTIU	
3.2.1.2.3.1 [4]	33	CTIU	
3.2.1.2.3.1 [5]	33	CTIU	
3.2.1.2.3.1 [6]	33	CTIU	
3.2.1.2.3.1 [7]	33	CTIU	
3.2.1.2.3.1 [8]	33	CTIU	
3.2.1.2.3.2 [1]	33	CTIU	
3.2.1.2.3.2	33	CTIU	
3.2.1.2.3.2 [3]	33	CTIU	
3.2.1.2.3.2 [4]	33	CTIU	
3.2.1.2.3.2 [5]	33	CTIU	
3.2.1.2.3.2 [6]	33	CTIU	
3.2.1.2.3.3 [1]	33	CTIU	
3.2.1.2.3.3 [2]	33	CTIU	
3.2.1.2.3.4	34	CTIU	
3.2.1.2.4 [1]	34	CTIU	
3.2.1.2.4 [2]	34	CTIU	
3.2.1.2.4[3]	34	CTIU	
3.2.1.2.5	34	CTIU	
3.2.1.2.5.1.1 [1]	34	CTIU	
3.2.1.2.5.1.1 [2]	34	CTIU	
3.2.1.2.5.1.2 [1]	34	CTIU	SCC–based FSWS
3.2.1.2.5.1.2 [2]	34	CTIU	SCC–based FSWS
3.2.1.2.5.1.2 [3]	34	CTIU	SCC–based FSWS
3.2.1.2.5.2 [1]	34	CTIU, SFE	
3.2.1.2.5.2 [2]	34	CTIU	
3.2.1.2.5.2 [3]	34	CTIU	
3.2.1.2.5.2 [4]	36	CTIU	
3.2.1.2.5.3 [1]	36	CTIU	
3.2.1.2.5.3 [2]	36	CTIU	
3.2.1.2.5.4.1 [1]	36	CTIU	
3.2.1.2.5.4.1 [2]	36	CTIU	
3.2.1.2.5.4.1 [3]	36	CTIU	
3.2.1.2.5.4.1 [4]	36	CTIU	
3.2.1.2.5.4.1 [5]	36	CTIU	COMS, EOSDIS
3.2.1.2.5.4.2 [1]	36	CTIU	
3.2.1.2.5.4.2 [2]	36	CTIU	

Section	Pg	Component	Subsystem
3.2.1.2.5.4.2 [3]	36	CTIU	
3.2.1.2.5.4.2 [4]	36	CTIU	COMS, EOSDIS
3.2.1.2.5.4.3	36	CTIU, SSR	COMS, EOSDIS
3.2.1.2.5.4.4 [1]a.	36	CTIU, SSR	COMS, FOT
3.2.1.2.5.4.4 [1]b.	36	CTIU, SSR	COMS, FOT
3.2.1.2.5.4.4 [2]	37	CTIU, SSR	COMS
3.2.1.2.5.5 [1]	37	CTIU	COMS
3.2.1.2.5.5 [2]	37	CTIU	COMS
3.2.1.2.5.5 [3]	37	CTIU	COMS
3.2.1.3 [1]	37	CTIU	
3.2.1.3 [2]	37	CTIU	
3.2.1.3 [3]	37	CTIU	
3.2.1.3 [4]	37	CTIU	
3.2.1.3 [5]a.	37	CTIU	
3.2.1.3 [5]b.	37	CTIU	
3.2.1.3 [6]	37	CTIU	
3.2.1.3 [7]	37	CTIU	
3.2.1.3 [8]	37	CTIU	
3.2.1.4	37	CTIU, BDU, SCC	SCC–based FSWS
3.2.1.4.1.1 [1]	37	CTIU	
3.2.1.4.1.1 [2]	39	CTIU	
3.2.1.4.1.1 [3]	39	CTIU	
3.2.1.4.1.1 [4]a.– e.	39	CTIU	
3.2.1.4.1.1 [5]	40	CTIU	
3.2.1.4.1.1[6]	40	CTIU	
3.2.1.4.1.1[7]	40	CTIU	
3.2.1.4.1.1[8]	40	CTIU	
3.2.1.4.1.1[9]	40	CTIU	
3.2.1.4.1.1[10]	40	CTIU	
3.2.1.4.1.2	40	CTIU	
3.2.1.4.1.3	40	CTIU	
3.2.1.4.2.1 [1]	40	CTIU	
3.2.1.4.2.1 [2]	40	CTIU	
3.2.1.4.2.1 [3]	40	CTIU	
3.2.1.4.2.1 [4]	40	CTIU	
3.2.1.4.2.1 [5]	40	CTIU	
3.2.1.4.2.1 [6]	40	CTIU	

Section	Pg	Component	Subsystem
3.2.1.4.2.1 [7]	40	CTIU	
3.2.1.4.2.2	42	CTIU	
3.2.1.4.3.1 [1]	42	CTIU	
3.2.1.4.3.1 [2]	42	CTIU	
3.2.1.4.3.1 [3]	42	CTIU	
3.2.1.4.3.2 [1]	42	CTIU	
3.2.1.4.3.2 [2]	42	CTIU	
3.2.1.4.4 [1]	43	CTIU, SCC	SCC–based FSWS
3.2.1.4.4 [2]	43	CTIU, SCC	SCC–based FSWS
3.2.1.4.4 [3]	43	CTIU, SCC	SCC–based FSWS
3.2.1.4.4 [4]	43	CTIU, SCC	SCC–based FSWS
3.2.1.4.4 [5]	43	CTIU, SCC	SCC–based FSWS
3.2.1.4.4 [6]	43	CTIU, SCC	SCC–based FSWS
3.2.1.4.4 [7]a.–e.	44	CTIU, SCC	SCC–based FSWS
3.2.1.4.4 [8]a.–d.	45	CTIU, SCC	SCC–based FSWS
3.2.1.4.4 [9]	45	CTIU, SCC	SCC–based FSWS
3.2.1.4.4 [10]a.	46	CTIU, SCC	SCC–based FSWS
3.2.1.4.4 [11]a.	46	CTIU, SCC	SCC–based FSWS
3.2.1.4.4 [11]b.	46	CTIU, SCC	SCC–based FSWS
3.2.1.4.4 [12]a.	46	CTIU, SCC	SCC–based FSWS
3.2.1.4.4 [12]b.	46	CTIU, SCC	SCC–based FSWS
3.2.1.4.4 [13]a.	46	CTIU, SCC	SCC–based FSWS
3.2.1.4.4 [13]b.	46	CTIU, SCC	SCC–based FSWS
3.2.1.4.4 [13]c.	46	CTIU, SCC	SCC–based FSWS
3.2.1.4.5	46	CTIU, SCC	SCC–based FSWS
3.2.1.4.6	46	BDU	
3.2.1.4.7a.	46	CTIU, BDU, SFE	
3.2.1.4.7b.	46	CTIU, BDU, SFE	
3.2.1.4.7.1 [1]	46	CTIU, SFE	
3.2.1.4.7.1 [2]	47	CTIU, SFE	
3.2.1.4.7.1 [3]	[3]	CTIU, SFE	
3.2.1.4.7.1 [4]	[4]	CTIU, SFE	
3.2.1.4.7.1 [5]	[5]	CTIU, SFE	
3.2.1.4.7.1 [6]a.	47	CTIU, SFE	
3.2.1.4.7.1 [6]b.	47	CTIU, SFE	
3.2.1.4.7.1 [6]c.	47	CTIU, SFE	
3.2.1.4.7.1 [7]	47	CTIU, SFE	

Section	Pg	Component	Subsystem
3.2.1.4.7.2 [1]a.	47	CTIU, BDU	S/C Equipment
3.2.1.4.7.2 [1]b.	47	CTIU, BDU	S/C Equipment
3.2.1.4.7.2 [1]c.	47	CTIU, BDU	S/C Equipment
3.2.1.4.7.2 [1]d.	48	CTIU, BDU	S/C Equipment
3.2.1.4.7.2 [1]e.	48	CTIU, BDU	S/C Equipment
3.2.1.4.7.2 [1]f.	48	CTIU, BDU	S/C Equipment
3.2.1.4.7.2 [2]	48	CTIU, BDU	S/C Equipment
3.2.1.4.7.2 [3]a.	48	CTIU, BDU	S/C Equipment
3.2.1.4.7.2 [3]b.	48	CTIU, BDU	S/C Equipment
3.2.1.4.7.2 [3]c.	50	CTIU, BDU	S/C Equipment
3.2.1.4.7.3 [1]	50	SFE, CTIU	Instruments
3.2.1.4.7.3 [2]a.	50	SFE, CTIU	Instruments
3.2.1.4.7.3 [2]b.	50	SFE, CTIU	Instruments
3.2.1.4.7.3 [2]c.	50	SFE, CTIU	Instruments
3.2.1.4.7.3 [3]a.	50	SFE, CTIU	Instruments
3.2.1.4.7.3 [3]b.	50	SFE, CTIU	Instruments
3.2.1.4.8.1 [1]	50	SSR, SFE	
3.2.1.4.8.1 [2]	50	SSR, SFE	
3.2.1.4.8.1 [3]	50	SSR, SFE	
3.2.1.4.8.1 [4]	50	SSR, SFE	
3.2.1.4.8.1 [5]	50	SSR, SFE	
3.2.1.4.8.1 [6]	50	SSR, SFE	
3.2.1.4.8.2 [1]	51	SSR, SFE	
3.2.1.4.8.2 [2]	51	SSR, SFE	
3.2.1.4.8.2 [3]	51	SSR, SFE	
3.2.1.4.8.2 [4]	51	SSR, SFE	
3.2.1.4.8.2 [5]	51	SSR, SFE	
3.2.1.4.8.2 [6]	52	SSR, SFE	
3.2.1.4.8.3[1]	52	SSR, SFE	
3.2.1.4.8.3[2]	52	SSR, SFE	
3.2.1.4.8.3[3]	52	SSR, SFE	
3.2.1.4.8.4[1]	52	SSR, SFE	
3.2.1.4.8.4[2]	52	SSR, SFE	
3.2.1.4.8.4[3]	52	SSR, SFE	
3.2.1.4.8.4[4]	52	SSR, SFE	
3.2.1.4.9[1]	52	SFE	
3.2.1.4.9[2]	52	SFE	

Section	Pg	Component	Subsystem
3.2.1.4.9[3]	52	SFE	
3.2.1.4.9[4]	53	SFE	
3.2.1.4.9[5]	53	SFE	
3.2.1.4.10a.	53	CTIU, SFE	
3.2.1.4.10b.	53	CTIU, SFE	
3.2.1.4.10c.	53	CTIU, SFE	
3.2.1.5 [1]	53	SSR	
3.2.1.5 [2]	54	CTIU, SSR	
3.2.1.6 [1]	54	BUT	
3.2.1.6 [2]a. b. c.d.e. f.	54	BUT	
3.2.1.6 [3]	54	BUT	
3.2.1.6 [4]	54	CTIU	
3.2.1.6 [5]	54	BUT	
3.2.1.6 [6]	54	CTIU	
3.2.1.6 [7]	54	CTIU	
3.2.1.6 [8]	54	BUT	
3.2.1.6 [9]	54	BUT	
3.2.1.6 [10]	54	BUT	
3.2.1.6 [11]	54	BUT	
3.2.1.6 [12]	54	BUT	
3.2.1.6 [13]	54	BUT	
3.2.1.6 [14]	56	BUT, CTIU	
3.2.1.6 [15]a.	56	BUT, CTIU, BDU	S/C Equipment with embedded RTs
3.2.1.6 [15]b.	56	BUT, CTIU, BDU	S/C Equipment with embedded RTs
3.2.1.6 [15]c.	56	BUT, CTIU, BDU	S/C Equipment
3.2.1.6 [15]d.	57	BUT, CTIU, BDU	S/C Subsystems
3.2.1.6 [15]e.	57	CTIU	
3.2.1.6.1 [1]	57	CTIU	
3.2.1.6.1 [2]	57	CTIU	
3.2.1.6.2 [1]	57	BUT	
3.2.1.6.2 [2]a.	57	BUT, BDU	
3.2.1.6.2 [2]b.	57	BUT, BDU	
3.2.1.6.2 [2]c.	57	BUT, BDU	
3.2.1.6.2 [2]d.	58	BUT, BDU	
3.2.1.6.2 [2]e.	58	BUT, BDU	
3.2.1.6.2 [3]	58	CTIU	
3.2.1.6.3 [1]	58	BUT	

Section	Pg	Component	Subsystem
3.2.1.6.3 [2]	58	BUT	
3.2.1.6.3 [3]	58	BUT	
3.2.1.6.3 [4]	58	BUT	
3.2.1.6.3.1 [1]a.	58	BUT	
3.2.1.6.3.1 [1]b.	58	BUT	
3.2.1.6.3.1 [2]a.	58	BUT, BDU	
3.2.1.6.3.1 [2]b.	58	BUT, BDU	
3.2.1.6.3.2 [1]a.	59	BUT	
3.2.1.6.3.2 [1]b.	59	BUT	
3.2.1.6.3.3 [1]	59	CTIU, BDU	
3.2.1.6.3.3 [2]	59	CTIU, BDU	
3.2.1.6.4	59	CTIU, BDU	
3.2.1.6.4.1	59	BUT	
3.2.1.6.5 [1]a.	59	BUT	
3.2.1.6.5 [1]b.	59	BUT	
3.2.1.6.5 [1]c.	59	BUT	
3.2.1.6.6	59	BUT	
3.2.1.7	59	SCC, CTIU	
3.2.1.7.1.1 [1]a.	60	SCC	SCC–based FSWS
3.2.1.7.1.1 [1]b.	60	SCC	SCC–based FSWS
3.2.1.7.1.1 [2]	60	SCC	SCC–based FSWS
3.2.1.7.1.1 [3]	60	SCC	SCC–based FSWS
3.2.1.7.1.1 [4]	60	SCC	SCC–based FSWS
3.2.1.7.1.1 [5]	60	SCC	SCC–based FSWS
3.2.1.7.2 [1]	60	CTIU	SCC–based FSWS
3.2.1.7.2 [2]	60	CTIU	SCC–based FSWS
3.2.1.7.2 [3]	60	CTIU	SCC–based FSWS
3.2.1.7.2 [4]	60	CTIU	SCC–based FSWS
3.2.1.8.1 [1]	60	CTIU	
3.2.1.8.1 [2]	61	CTIU	
3.2.1.8.1 [3]	61	CTIU	
3.2.1.8.1 [4]	61	CTIU	
3.2.1.8.1 [5]	61	CTIU	COMS
3.2.1.8.1 [6]a.	61	CTIU	
3.2.1.8.1 [6]b.	61	CTIU	
3.2.1.8.1 [7]	61	CTIU	
3.2.1.8.1 [8]	61	CTIU	

Section	Pg	Component	Subsystem
3.2.1.8.1 [9]a.	61	CTIU	
3.2.1.8.1 [9]b.	61	CTIU	
3.2.1.8.1 [10]	61	CTIU	
3.2.1.8.1 [11]	61	CTIU	
3.2.1.8.1 [12]	61	CTIU	
3.2.1.8.1 [13]	61	CTIU	
3.2.1.8.1 [14]	61	CTIU	
3.2.1.8.1 [15]a.	61	CTIU	
3.2.1.8.1 [15]b.	61	CTIU	
3.2.1.8.2 [1]a.	61	CTIU	
3.2.1.8.2 [1]b.	62	CTIU	COMS
3.2.1.8.2 [2]	62	CTIU	COMS
3.2.1.8.2 [3]	62	CTIU	COMS
3.2.1.8.2 [4]a.	62	CTIU	
3.2.1.8.2 [4]b.	62	CTIU	
3.2.1.8.3 [1]	62	CTIU, BDU	S/C Equipment
3.2.1.8.3 [2]	62	CTIU	
3.2.1.8.3 [3]	62	CTIU	
3.2.1.8.4 [1]	62	CTIU	
3.2.1.8.4 [2]	62	CTIU, BUT	S/C Equipment
3.2.1.8.5 [1]	62	CTIU, BUT	Instrument
3.2.1.8.5 [2]	62	CTIU, BUT	Instrument
3.2.1.8.5 [3]	62	CTIU, BUT	Instrument
3.2.1.8.5 [4]	62	CTIU	
3.2.1.8.6 [1]	62	CTIU	SCC–based FSWS
3.2.1.8.6 [2]	63	CTIU	
3.2.1.8.6 [3]	63	CTIU	
3.2.1.8.7 [1]	63	CTIU	Instruments
3.2.1.8.7 [2]a.	63	CTIU	
3.2.1.8.7 [2]b.	63	CTIU	
3.2.1.8.7.1 [1]	63	CTIU	COMS
3.2.1.8.7.1 [2]	63	CTIU	COMS
3.2.1.8.7.1 [3]	63	CTIU	COMS
3.2.1.8.7.1 [4]	63	CTIU	SCC–based FSWS
3.2.1.8.7.1 [5]	63	CTIU	COMS
3.2.1.8.7.1 [6]	63	CTIU	COMS
3.2.1.9 [1]	63	SFE, CTIU	Instruments

Section	Pg	Component	Subsystem
3.2.1.9 [2]	63	SFE	Instruments
3.2.1.9 [2]	63	SFE	Instruments
3.2.1.9 [4]	64	SFE	EOSDIS
3.2.1.9 [5]	64	SFE	COMS
3.2.1.9 [6]	64	SFE, SSR	
3.2.1.9 [7]	64	SSR	
3.2.1.9 [8]	64	SFE,SSR	COMS, EOSDIS, FOT
3.2.1.9 [9]	64	SFE	COMS
3.2.1.9 [10]	64	SFE,SSR	COMS, EOSDIS, FOT
3.2.1.9 [11]	64	SFE	COMS, FOT
3.2.1.9 [12]a.	64	SFE	COMS
3.2.1.9 [12]b.	64	SFE	COMS
3.2.1.9 [12]c.	64	SFE	COMS
3.2.1.9 [13]a.	64	SFE	COMS
3.2.1.9 [13]b.	65	SFE	COMS
3.2.1.9 [14]	65	SFE	COMS
3.2.1.9 [15]	65	SFE	Instruments
3.2.1.9 [16]	65	SFE	Instruments
3.2.1.9 [17]	65	SFE	
3.2.1.9 [18]	65	SFE, SSR	
3.2.1.9 [19]	65	SFE, SSR	COMS
3.2.1.9 [20]	65	SFE	COMS
3.2.1.9[21]	65	SFE	COMS
3.2.1.9.1	65	SFE	EOSDIS
3.2.1.9.1.1	65	SFE	Instrument, EOSDIS
3.2.1.9.2 [1]a.	65	SFE	Instruments
3.2.1.9.2 [2]	65	SFE	Instruments
3.2.1.9.3 [1]	65	SFE	Instruments
3.2.1.9.3 [2]	66	SFE, CTIU	Instruments
3.2.1.9.3 [3]	66	SFE	EOSDIS
3.2.1.9.3 [4]	66	SFE	EOSDIS
3.2.1.9.3.1 [1]	66	SFE, CTIU	Instruments
3.2.1.9.3.1 [2]	66	SFE, CTIU	Instruments
3.2.1.9.3.2	66	SFE, CTIU	Instruments, SCC–based FSWS
3.2.1.9.3.3 [1]	66	SFE,CTIU	Instruments
3.2.1.9.3.3 [2]	66	SFE,CTIU	Instruments
3.2.1.9.3.3 [3]	66	SFE,CTIU	Instruments

Section	Pg	Component	Subsystem
3.2.1.9.3.3 [4]	66	SFE,CTIU	Instruments
3.2.1.9.3.3 [5]	66	SFE,CTIU	Instruments
3.2.1.9.3.3 [6]	67	SFE,CTIU	Instruments
3.2.1.9.3.3 [7]	67	SFE,CTIU	Instruments
3.2.1.9.3.3 [8]	67	SFE,CTIU	Instruments
3.2.1.9.4 [1]	67	SFE	Instruments
3.2.1.9.4 [2]	67	SFE	Instruments
3.2.1.9.4 [3]	67	SFE	Instruments
3.2.1.9.4 [4]	67	SFE	Instruments
3.2.1.9.4 [5]	67	SFE	Instruments
3.2.1.9.4 [6]	67	SFE	Instruments, EOSDIS
3.2.1.9.4.1 [1]	67	SFE, SSR	
3.2.1.9.4.2 [1]	67	SFE, SSR	
3.2.1.9.4.2 [2]	67	SFE, SSR	
3.2.1.9.4.3 [1]	67	SFE	
3.2.1.9.4.3 [2]	67	SFE	
3.2.1.9.4.3 [3]a.	67	SFE	
3.2.1.9.4.3 [3]b.	67	SFE	
3.2.1.9.4.3	68	SFE	
3.2.1.9.4.3	68	SFE	
3.2.1.9.4.3	68	SFE	
3.2.1.9.4.3	68	SFE	
3.2.1.9.5 [1]	68	SSR	
3.2.1.9.5 [2]	68	SSR	
3.2.1.9.5 [3]	68	SSR	
3.2.1.9.6 [1]	68	SFE	COMS
3.2.1.9.6 [2]	68	SFE	EOSDIS
3.2.1.9.6 [3]	68	SFE, SSR	EOSDIS
3.2.1.9.6 [4]	68	SFE, SSR	COMS
3.2.1.9.6 [5]	69	SFE, SSR	COMS, EOSDIS
3.2.1.9.6 [6]	69	SFE, SSR	COMS, EOSDIS
3.2.1.9.6 [7]	69	SFE	COMS, EOSDIS
3.2.1.10.1 [1]	69	CTIU, BDU	SCC–based FSWS, FOT
3.2.1.10.1 [2]a.	69	CTIU	SCC–based FSWS
3.2.1.10.1 [2]b.1.	69	CTIU, BDU	SCC–based FSWS
3.2.1.10.1 [2]b.2.	69	CTIU, BDU	SCC–based FSWS
3.2.1.10.1 [3]	69	CTIU, BDU, BUT	

Section	Pg	Component	Subsystem
3.2.1.10.1 [4]	69	SFE, SSR	
3.2.1.10.2	69	CTIU BDU BUT	SCC–Based FSWS
3.2.1.10.2[1]a	69	CTIU	S/C Equipment
3.2.1.10.2[1]b	69	BDU	ACE, PDU
3.2.1.10.3	69	N/A	Ground Control
3.2.1.11 [1]	69	All Components	
3.2.1.11 [2]	70	All Components	
3.2.1.11 [3]	70	All Components	
3.2.1.11 [4]	70	All Components	
3.2.1.11 [5]	70	All Components	
3.2.1.11 [6]	70	All Components	
3.2.1.11 [7]	70	All Components	
3.2.1.11 [8]	70	All Components	
3.2.1.11.1	70	SCC, CTIU	
3.2.1.12	70	All Components	
3.2.1.13	70	All Components	
3.2.1.14	70		
3.2.2 [1]	70	All Components	
3.2.2 [2]	70	All Components	
3.2.2 [3]	70	All Components	
3.2.2 [4]	72	All Components	
3.2.3 [1]a.	72	CTIU	
3.2.3 [1]b.	72	CTIU	
3.2.3 [1]c.	72	CTIU, BDU	
3.2.3 [1]d.	72	CTIU, BDU	
3.2.3 [1]e.	72	CTIU, BDU	
3.2.3 [1]f.	73	CTIU, BDU	
3.2.3 [1]g.	73	CTIU	
3.2.3 [1]h.	73	CTIU	
3.2.3 [1]i.	73	CTIU	
3.2.3 [1]j.	73	CTIU, SCC	
3.2.3 [1]k.	73	BDU	
3.2.3 [1]l.	73	CTIU	
3.2.3 [1]m.	73	CTIU, BDU	
3.2.3 [1]n.	73	All Components	
3.2.3.1 [1]	73	CTIU	
3.2.3.1 [2]	73	SFE, SSR	

Section	Pg	Component	Subsystem
3.2.3.1 [3]	73	SSR	
3.2.3.1.1 [1]	73	SCC, CTIU, BDU, SSR	
3.2.3.1.1 [2]	73	SCC, CTIU, BDU, SSR	
3.2.3.2 [1]	73	SCC, CTIU, BDU	
3.2.3.2 [2]	73	SCC, CTIU, BDU, SSR	
3.2.3.2 [3]	73	SFE, SSR	Instruments
3.2.3.2.1 [1]	74	SCC, CTIU, BDU, SSR	
3.2.3.3 [1]	74	SCC, CTIU, BDU, SSR	
3.2.3.3 [2]	74	SCC, CTIU, BDU, SSR	
3.2.3.3 [3]	74	SSR, CTIU	
3.2.3.3 [4]	74	CTIU	
3.2.3.3.1 [1]	74	SCC, CTIU, BDU SSR, SFE	
3.2.3.3.1 [2]a.	74	SCC	
3.2.3.3.1 [2]b.	74	CTIU	
3.2.3.3.1 [2]c.	74	SFE, SSR	
3.2.3.4 [1]	74	SCC, CTIU, BDU SSR, SFE	
3.2.3.4 [2]	74	SSR, CTIU, SFE	
3.2.3.4 [3]	75	SFE, SSR	
3.2.3.4 [4]	75	SFE, SSR	
3.2.3.4.1	75	SCC, CTIU, BDU, SSR, SFE	
3.2.3.5	75	CTIU	
3.2.4.1 [1]	75	All Components	
3.2.4.1 [2]	75	All Components	
3.2.4.2 [1]	75	All Components	
3.2.4.2 [2]	75	All Components	
3.2.4.2 [3]	75	All Components	
3.2.4.2 [4]	75	All Components	
3.2.4.2 [5]	75	All Components	
3.2.4.3	75	All Components	
3.2.5 [1]	76	All Components	
3.2.5 [2]	76	All Components	
3.2.5 [3]	76	All Components except CTIU	
3.2.6 [1]	76	All Components	
3.2.6 [2]	76	All Components	

Section	Pg	Component	Subsystem
3.2.6 [3]	76	None, allocated in 3.7 to components	
3.2.6.1	76	All Components	
3.2.6.2 [1]	76	All Components	
3.2.6.2 [2]	76	All Components	
3.2.6.3 [1]	76	All Components	
3.2.7 [1]	76	All Components	
3.2.7 [2]	76	All Components	
3.2.7 [3]	77	All Components	
3.2.7 [4]	77	All Components	
3.2.7.1	77	All Components	
3.2.7.2	77	All Components	
3.2.7.3	77	All Components	
3.2.7.4	77	All Components	
3.2.7.5	77	All Components	
3.2.7.5.1	77	All Components	
3.2.7.5.2 [1]	77	All Components	
3.2.7.5.2 [2]	77	All Components	
3.2.7.6 [1]	78	All Components	
3.2.7.6 [2]	78	All Components	
3.3	78	All Components	
3.3.1	78	All Components	
3.3.2	78	All Components	
3.3.3	78	All Components	
3.3.4	78	All Components	
3.3.5 [1]	78	All Components	
3.3.5 [2]	78	All Components	
3.3.5 [3]	79	All Components	
3.3.6	79	All Components	
3.3.6.1	79	All Components	
3.4	79	All Components	
3.4.1	79	CTIU	SCC–based FSWS
3.5	79	All Components	
3.5.1	79	All Components	
3.5.2	79	All Components	
3.6	79	All Components	
3.6.1	79	All Components	
3.6.2	80	All Components	

PS20008580
CAGE No. 49671
30 June 1993

Performance Specification Communications Subsystem for EOS–AM Spacecraft (SP–401)

Prepared under:
Contract NAS5–32500
NASA Goddard Space Flight Center
Greenbelt, Maryland 20771

Prepared by:
Martin Marietta Corporation
Astro Space
P.O. Box 800
Princeton, New Jersey 08543–0800

DCC062993

(This page intentionally left blank.)

REVISION LOG

This log identifies those portions of this document which have been revised since the original issue. Revised portions of each page, for the current revision only, are identified by marginal striping.

Revision	Paragraph Number(s) Affected	Rev. Date	Approval
Initial Issue		06/30/93	CM/GSR

(This page intentionally left blank.)

TABLE OF CONTENTS

SECTION / PARAGRAPH	TITLE	PAGE
1	SCOPE	1
1.1	Identification	1
2	APPLICABLE DOCUMENTS	3
2.1	Government Documents	3
2.1.1	NASA Documents	3
2.1.2	Military Documents	3
2.1.3	Other Government Documents	3
2.2	Non–Government Documents	3
2.2.1	Martin Marietta Astro Space Documents	3
3	REQUIREMENTS	7
3.1	Communications Subsystem Definition	7
3.1.1	Interface Definition	7
3.1.1.1	Functional Interfaces	7
3.1.1.2	Physical Interfaces	13
3.1.2	Major Component List	14
3.2	Characteristics	14
3.2.1	Performance	14
3.2.1.1	COMMS Data Communications Functions	15
3.2.1.2	COMMS Navigation and Tracking Support	16
3.2.1.3	COMMS Time Transfer Support	16
3.2.1.4	Link Parameter Requirements	16
3.2.1.5	Command and Telemetry Links	27
3.2.1.6	High Gain Antenna	29
3.2.1.7	COMMS Link Margins	29
3.2.1.8	COMMS Bit Error Rate	29
3.2.1.9	Telemetry Allocation	29
3.2.2	Operational Modes	29
3.2.2.1	Ground Test Mode	29

TABLE OF CONTENTS (Continued)

SECTION / PARAGRAPH	TITLE	PAGE
3.2.2.2	Survival Mode	31
3.2.2.3	Delta–V Mode	31
3.2.2.4	Standby Mode	31
3.2.2.5	Science Mode	32
3.2.2.6	Safe Mode	32
3.2.2.7	Launch/Ascent Mode	32
3.2.3	Command Reception Operations	33
3.2.3.1	SSA/SMA Command Links via the HGA	33
3.2.3.2	SSA Command Link via Omni Antennas (Contingency)	33
3.2.3.3	DSN/GN/WTS Command Link via Omni Antenna (Emergency Backup)	33
3.2.4	Telemetry Transmission Operations	33
3.2.4.1	Science Data Transmission Operations	33
3.2.4.2	Direct Access Service	34
3.2.5	Physical Characteristics	36
3.2.5.1	Mass	36
3.2.5.2	Durability	36
3.2.5.3	Layout and Dimensions	36
3.2.5.4	Maintainability Impact on Design	36
3.2.6	Power Characteristics	36
3.2.7	Reliability	36
3.2.7.1	Storage Restrictions	36
3.2.7.2	Reserved	36
3.2.7.3	Failure Tolerance	36
3.2.7.4	Failure Propagation Restrictions	37
3.2.8	Environmental Conditions	37
3.2.8.1	Storage, Integration and Test	37
3.2.8.2	Shipment	37
3.2.8.3	Launch	37
3.2.8.4	On–orbit	37
3.2.8.5	Electromagnetic Radiation	37

TABLE OF CONTENTS (Continued)

SECTION / PARAGRAPH	TITLE	PAGE
3.2.8.6	Single Event Upset (SEU) and Single Event Latchup	38
3.3	Design and Construction	38
3.3.1	Material, Processes, Parts, and Finishes	38
3.3.2	Nameplates and Product Marking	38
3.3.3	Workmanship	38
3.3.4	Interchangeability	38
3.3.5	Safety	38
3.3.5.1	Pressurized Vessels	38
3.4	Documentation	38
3.4.1	Specifications	38
3.4.2	Drawings	39
3.4.3	Reserved	39
3.4.4	Test plans	39
3.4.5	Procedures	39
3.4.6	Software Documentation	39
3.4.7	Operations Documentation	39
3.5	Logistics	39
3.5.1	Maintenance	39
3.5.2	Supply	40
3.6	Precedence	40
3.6.1	Precedence of Design Criteria	40
3.6.2	Documentation Precedence	40
3.7	Major Component Characteristics	41
3.7.1	Allocations	41
3.7.2	Flight Hardware Component Characteristics	41
3.7.2.1	High Gain Antenna Assembly (HGAA)	41
3.7.2.2	KSA Modulator	42
3.7.2.3	S–band Transponder	43
3.7.2.4	Master Oscillator (MO)	44
3.7.2.5	S–band Interface Unit (SBIU)	45

TABLE OF CONTENTS (Continued)

SECTION / PARAGRAPH	TITLE	PAGE
3.7.2.6	S–band Omni Antenna	45
3.7.2.7	DAS Antenna	46
3.7.2.8	DAS SSPA	46
3.7.2.9	DAS Upconverter	46
3.7.2.10	DAS Modulator	47
4	QUALITY ASSURANCE PROVISIONS	49
4.1	Communications Subsystem Verification	49
4.1.1	Verification Phases	49
4.1.2	Verification Methods	49
4.2	Testing	49
4.2.1	Acceptance Testing	49
4.2.2	Qualification testing	50
4.2.3	Protoflight Testing	50
4.2.4	Installation Testing And Checkout	50
4.2.5	Test Equipment Verification	50
4.2.6	Verification Conditions	50
4.3	Verification Documentation	50
4.3.1	Responsibility for Verification	50
5	PREPARATION FOR DELIVERY	51
6	NOTES	53
6.1	Definitions	53
6.2	Acronyms and Abbreviations	53
6.3	Exceptions to the GIS and GIIS	54
6.4	Requirements Traceability	54

TABLE OF CONTENTS (Continued)

SECTION / PARAGRAPH	TITLE	PAGE
	APPENDIX I	
10	COMMUNICATION SUBSYSTEM COMMAND LIST	55
10.1	S–band Transponder Command List (1)	55
10.2	S–band Interface Unit (SBIU) Command List	57
10.3	KSA Modulator Command List (1)	57
10.4	DAS Modulator Command List (1)	58
10.5	DAS SSPA Command List (1)	58
10.6	Master Oscillator Command List (1)	59
10.7	High Gain Antenna Assembly (HGAA) Command List	59
	APPENDIX II	
20	COMMUNICATION SUBSYSTEM TELEMETRY REQUIREMENTS	61
20.1	Telemetry Table Header Definition	61
20.2	S–Band Transponder Telemetry List	62
20.3	S–Band Interface Unit Telemetry List	64
20.4	Ku–band Single Access (KSA) Modulator Telemetry List	64
20.5	DAS Modulator Telemetry List	65
20.6	DAS Waveguide Switch Telemetry List	65
20.7	DAS SSPA Telemetry List	66
20.8	Master Oscillator (MO) Telemetry List	66
20.9	High Gain Antenna Telemetry List	66

LIST OF FIGURES

FIGURE	TITLE	PAGE
1	Communications Subsystem Block Diagram	8
2	X–Band Block Diagram	9
3	Ku–Band Block Diagram	10
4	S–Band Subsystem Block Diagram	11
5	S–Band Interface Unit (SBIU) Block Diagram	12

LIST OF TABLES

TABLE	TITLE	PAGE
I	Major Components	15
II	Navigation Tracking Links	16
III	Ku–band Subsystem Performance Characteristics	17
IV	X–band (DAS) Subsystem Performance Characteristics	18
V	S-band Forward Link Signal Parameters from TDRSS to EOS Spacecraft	20
VI	EOS S-band Return Link Signal Parameters to TDRSS	22
VII	S–band Forward Link Signal Parameters from DSN/GN/WTS to EOS Spacecraft	25
VIII	S–band Return Link Signal Parameters From EOS Spacecraft to DSN/GN/WTS	26
IX	Forward (Command) Links	27
X	EOS Return Link Telemetry, Science and Tracking Modes	28
XI	Minimum COMMS Capability	30
XII	Science Data Downlink Service Allocations	34
XIII	Communications Subsystem Allocations	41
XIV	KSA Modulator Modes	43
XV	DAS Modulator Modes	47

TBR LOG

ITEM	SECTION	PAGE	SUBJECT	RESP.	DUE
TBR–1	3.2.1.8	29	COMMS Bit Error Rate	T. Milbourne	3/94
TBR–2	3.2.3.2	33	Receive Omni Coverage	T. Milbourne	3/94
TBR–3	3.2.3.2	33	Receive Omni Coverage	T. Milbourne	3/94

1 SCOPE

1.1 Identification

This specification establishes the performance, design, development, and test requirements for the Communications Subsystem (COMMS) of the EOS–AM Spacecraft. These requirements are derived from the Contract End Item (CEI) Specification for the EOS–AM Spacecraft (PS20005396).

(This page intentionally left blank.)

2 APPLICABLE DOCUMENTS

2.1 Government Documents

The following documents of the exact issue shown, form a part of this specification to the extent specified herein. In the event of conflict between the documents referenced below and the contents of this specification, the contents of this specification shall take precedent, except as defined in Section 3.6 herein.

2.1.1 NASA Documents

STDN 101.1, Rev. 4 October 1992	Spaceflight Tracking and Data Network Users Guide, GSFC
STDN 101.2, Rev. 6 September 1988	Space Network (SN) User's Guide, GSFC
STDN 101.3, Rev. 3 November 1991	Ground Network (GN) User's Guide, GSFC
531–TR–001 October 1991	Users Spacecraft Clock Calibration System (USCCS) User's Guide

2.1.2 Military Documents

WSMCR–127–1 December 1989	Western Space and Missile Center Range Safety Regulations

2.1.3 Other Government Documents

Not applicable.

2.2 Non–Government Documents

The following documents, of the latest issue shown, form a part of this specification to the extent specified herein. In the event of conflict between the documents referenced herein and the contents of this specification, the contents of this specification shall be considered a superseding requirement, except for higher tier documents.

2.2.1 Martin Marietta Astro Space Documents

IS20008501	General Interface Specification for the Earth Observing System (ICD–101)
IS20008504	Radio Frequency Interface Control Document Between the EOS–AM Spacecraft and the Spaceflight Tracking and Data Network (ICD–104)

IS20008689	Direct Access System User's Guide (ICD–107)
IS20008503	EOS–AM Spacecraft to Launch Vehicle IRD (ICD–03)
PS20005396	EOS–AM Spacecraft Contract End Item Specification (SEP–101)
PS20005404	Verification Specification for the Earth Observing System (VRD–110)
PN20005404	Verification Plan for the Earth Observing System (VRD–100)
PN20005869	Electromagnetic Compatibility (EMC) Control Plan (SEP–106)
20005391	Government Furnished Property Plan
20008652	Critical Items List
20008655	EOS Platform Software Management Plan
20004280	Subcontractor's Performance Assurance Requirements
PN20005397	Performance Assurance Implementation Plan
PN20008664	Comprehensive Test Plan (VRD–105)
TP–FTE–20008580	Functional Test Procedure, Electrical for the Communications Subsystem
TP–CPTE–20008580	Comprehensive Performance Test Procedure, Electrical for the Communications Subsystem
TP–AT–20008580	Aliveness Test Procedure for the Communications Subsystem
20008650	Program Approved Materials and Processes List (PA–460)
20008648	Program Approved Parts List (PA–325)
PS20008513	Critical Item Development Specification: High Gain Antenna Assembly
PS20008567	Command and Data Handling Subsystem Specification (SP–301)
PS20008569	Critical Item Development Specification: Command and Telemetry Interface Unit (CTIU)

PS20008575	Critical Item Development Specification: Science Formatting Equipment (SFE)
PS20008583	Critical Item Development Performance Specification: S–band Omni Antenna
PS20008584	Critical Item Development Performance Specification: S–band Transponder
PS20008586	Critical Item Development Performance Specification: S–band Interface Unit
PS20008588	Critical Item Development Performance Specification: KSA Modulator
PS20008589	Critical Item Development Performance Specification: DAS Modulator
PS20008590	Critical Item Development Performance Specification: DAS SSPA
PS20008543	Critical Item Development Performance Specification: Master Oscillator
PS20008568	Performance Specification Bus Data Unit (BDU) for EOS–AM Spacecraft (SP–302)
PS20008573	Critical Item Development Performance Specification: DAS Upconverter
PS20008506	Critical Item Development Performance Specification: Direct Access System Antenna
PS20008694	Critical Item Development Performance Specification: Fuse Distribution Board
PS20001411	Critical Item Development Performance Specification: Recorder Equipment Module
PS20008571	Critical Item Development Performance Specification: Direct Access System (DAS) Panel
PS20008745	Critical Item Development Performance Specification: Command and Data Handling/Communications Equipment Module
Source:	Martin Marietta Astro Space P. O. Box 800 Princeton, NJ 08543–0800

Standards:

S32534	Identification Marking
Source:	Martin Marietta Astro Space P. O. Box 800 Princeton, NJ 08543–0800

3 REQUIREMENTS

The Communications Subsystem (COMMS) shall meet all performance requirements specified herein. All requirements are end–of–life (EOL) specifications unless stated otherwise.

3.1 Communications Subsystem Definition

The COMMS will accommodate the transmission of EOS Spacecraft telemetry, the reception of EOS Spacecraft commands, the support of the EOS Spacecraft navigation requirements, and the transmission of Ku–band realtime and playback science data using the Tracking and Data Relay Satellite System (TDRSS). Transmission of telemetry and reception of commands will be primarily supported through TDRSS. If the TDRSS becomes unavailable, backup command and telemetry functions will be accommodated through the use of the Deep Space Network (DSN), the ground network (GN) or the Wallops Tracking Station (WTS). Primary navigation functions will be supported via the use of TDRSS Onboard Navigation System, Block I (TONS I). Should the TONS function become unavailable, then the TDRSS based S–band tracking support function will be utilized as the backup navigation source. The Direct Access System (DAS) will provide direct–to–user science data and also act as a backup to the TDRSS science data return link function. The Communications subsystem will support a hardline command interface through the launch vehicle umbilical for prelaunch checkout.

To accommodate the above objectives, the Communications subsystem will provide Ku–band, S–band, and X–band equipment. For Ku–band the return link frequency band is 15,003.4 ±150 MHz. At S–band the forward link frequency band is 2106.4±3.5 MHz while the return link utilizes 2287.5 ±3.5 MHz. The X–band Direct Access System (DAS) which includes Direct Playback(DP), Direct Downlink (DDL) and Direct Broadcast (DB) services utilizes a downlink transmit frequency centered at 8212.5 MHz in an operating band from 8025 to 8400 MHz (375 MHz bandwidth).

3.1.1 Interface Definition

3.1.1.1 Functional Interfaces

A block diagram of the Communications Subsystem is given in Figure 1. Block diagrams of the X–band, Ku–band, and S– band subsystems are shown in Figures 2, 3, and 4 respectively. A block diagram of the S–band Interface Unit (SBIU) is shown in Figure 5.

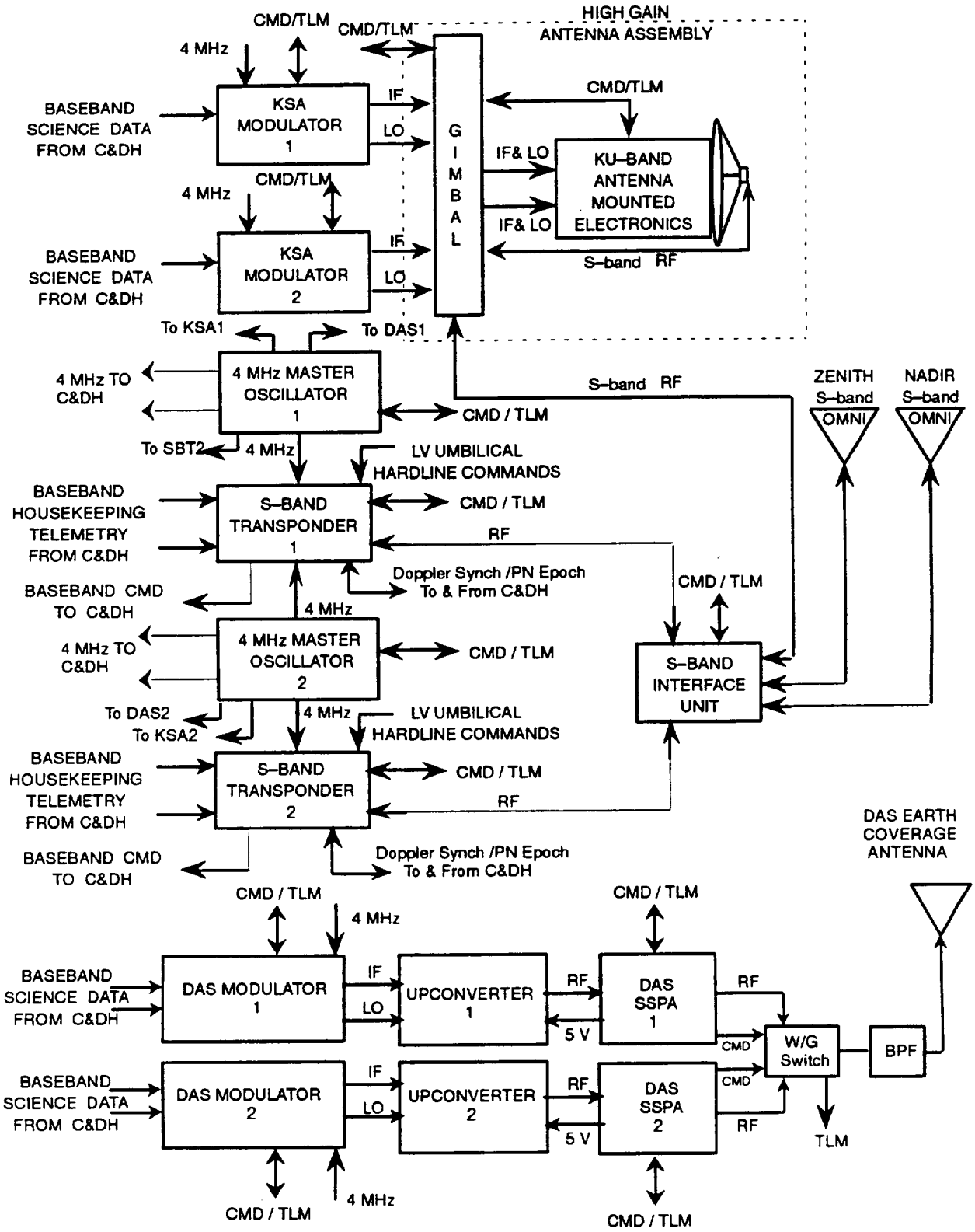

Figure 1. Communications Subsystem Block Diagram

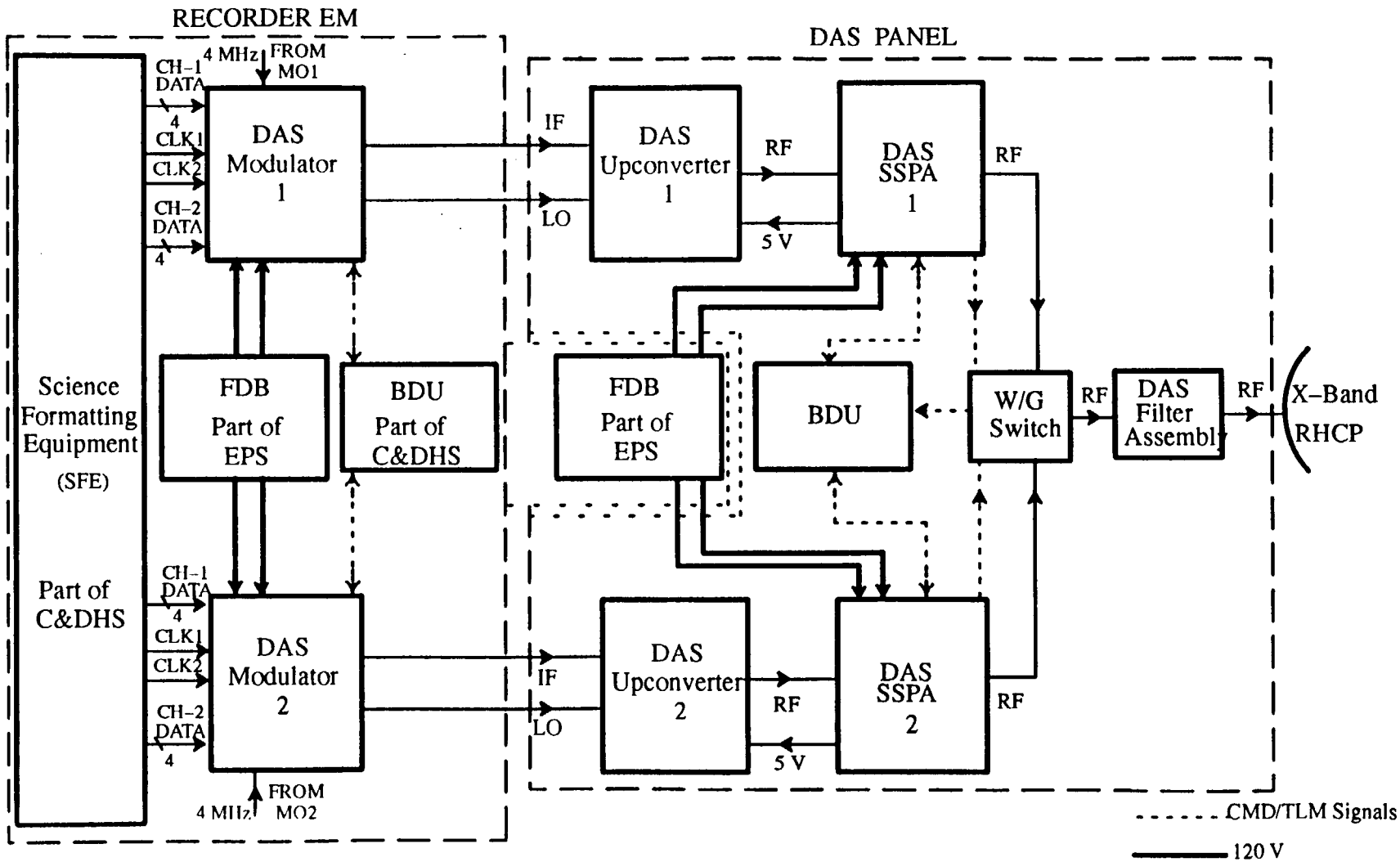

Figure 2. X-band Block Diagram

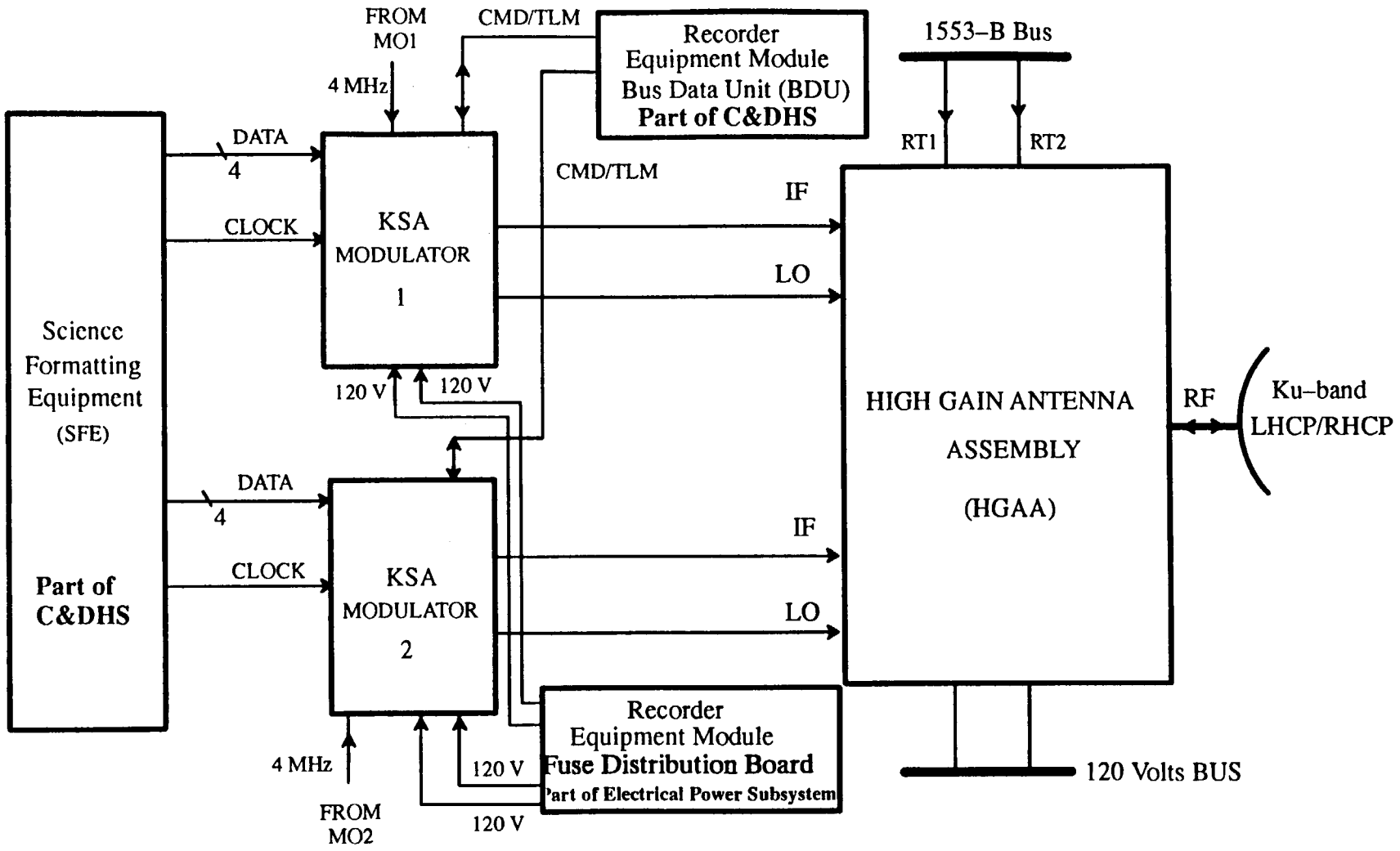

Figure 3. Ku–band Block Diagram

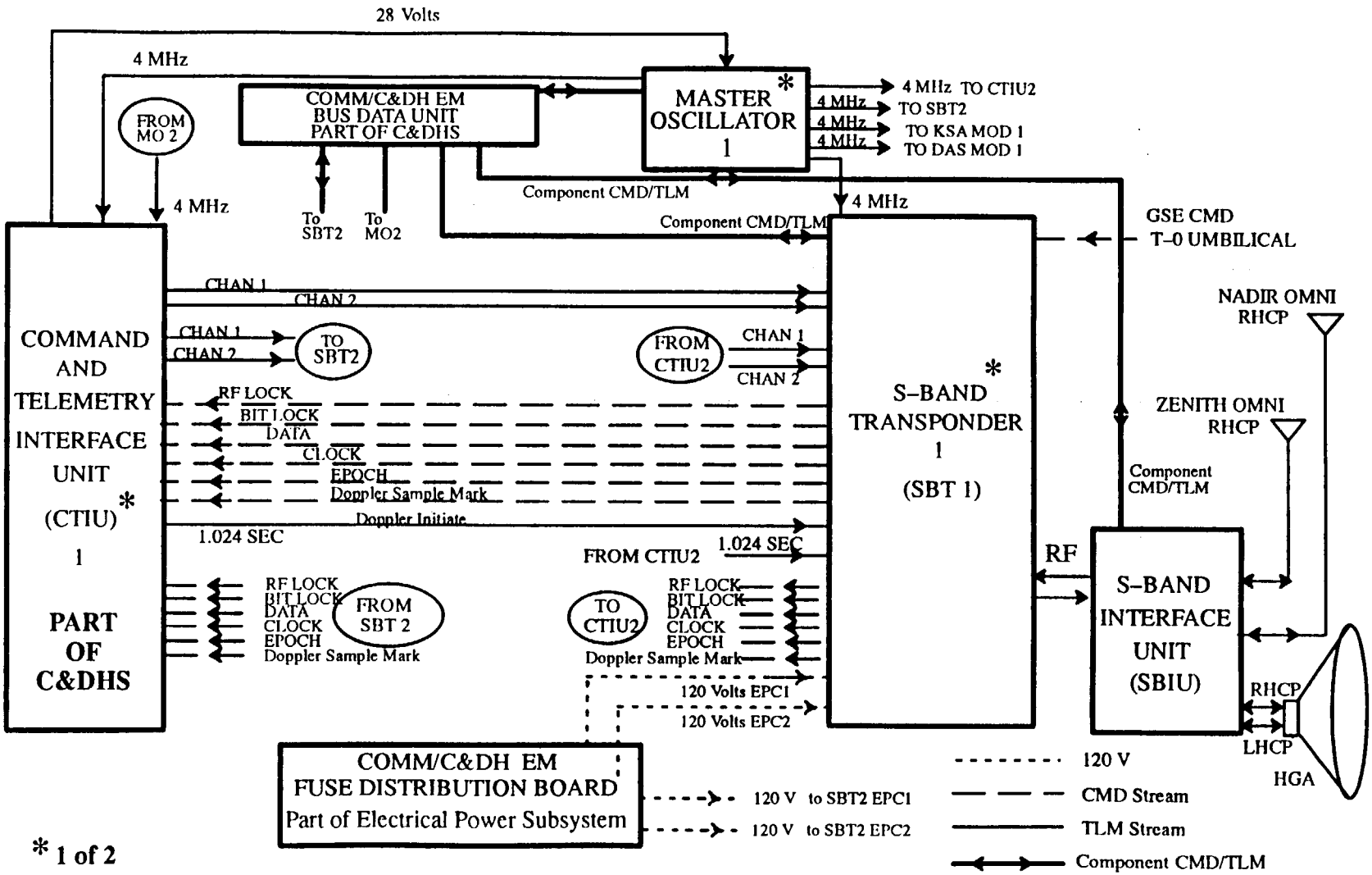

Figure 4. S–band Subsystem Block Diagram

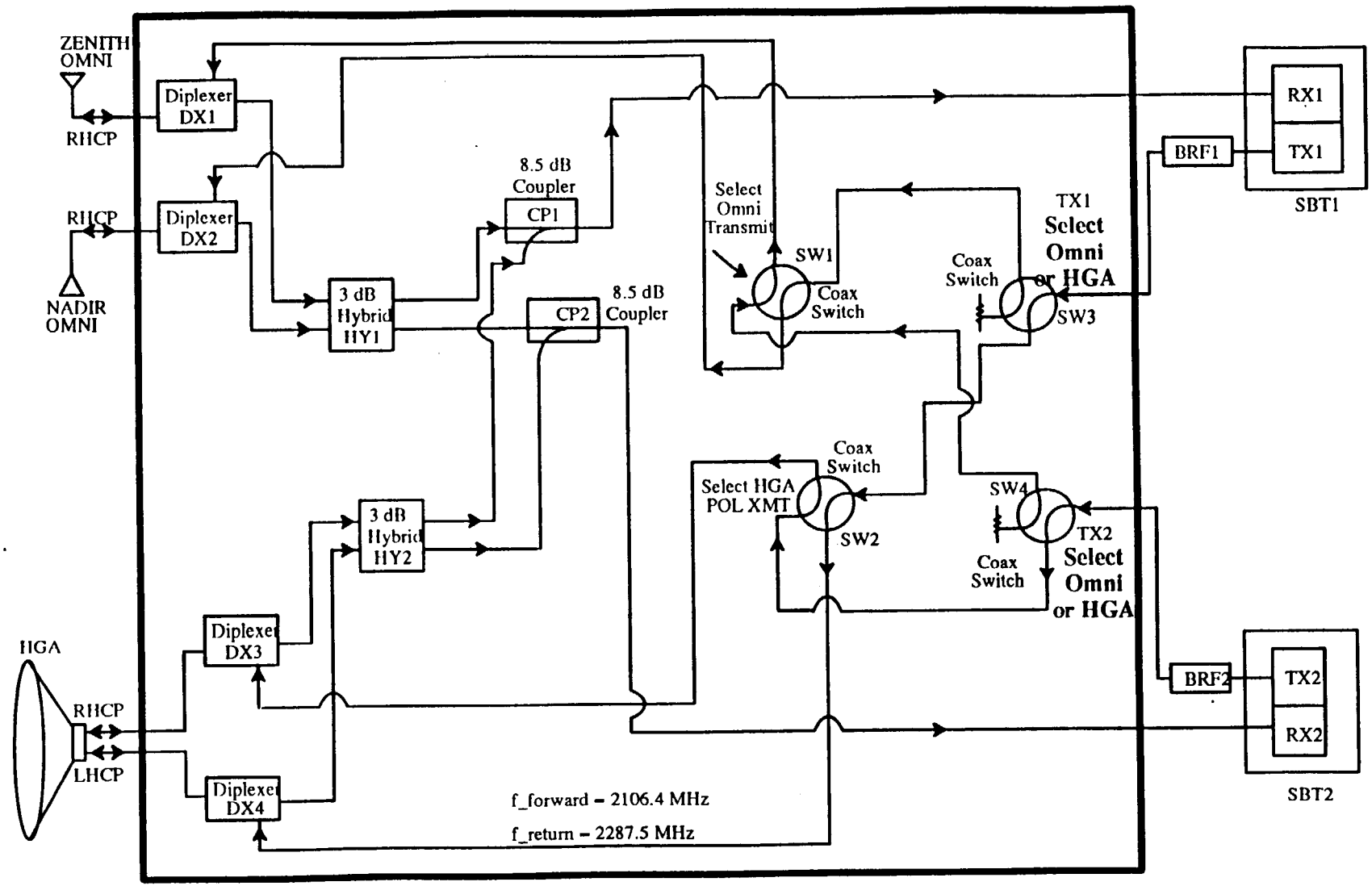

Figure 5. S–band Interface Unit (SBIU) Block Diagram

3.1.1.2 Physical Interfaces

The COMMS components are located on the following Spacecraft assemblies:

a. DAS Panel: DAS Upconverters (2), DAS SSPA's (2), Waveguide Switch (1), and DAS Filter Assembly (1)

b. COMMS/Control and Data Handling Subsystem (C&DHS) Equipment Module: S–band Transponders (2), Master Oscillators (2), and S–band Interface Unit (1)

c. Recorder Equipment Module: DAS Modulators (2), and Ku–band Single Access (KSA) Modulators (2)

d. Spacecraft Core Assembly: S–band Omni Antennas (2), DAS Earth Coverage Antenna (1)

e. High Gain Antenna Assembly

3.1.1.2.1 Electrical Interfaces

The Communications subsystem shall conform to the requirements of Section 5 of the General Interface Specification (GIS), IS20008501, regarding power, grounds, standard signal interfaces, test points, connectors, and pin allocations. The electrical interfaces for the equipment modules/panel are shown in PS20001411 (Recorder Equipment Module), PS20008571 (DAS Panel), and PS20008745 (C&DH/Communications Equipment Module). The interfaces for the High Gain Antenna Assembly, S–band omni antennas, and DAS Earth Coverage Antenna are given in PS20008513, PS20008583, and PS20008506, respectively.

The Communications subsystem interfaces to GSE shall allow testing both with and without the use of radiated RF communications links.

3.1.1.2.1.1 Spacecraft Power Bus Interface

As shown in Figures 2 to 4 and PS20008513, PS20008583, and PS20008506, the COMMS components on the DAS Panel, Recorder Equipment Module, and C&DH/Communications Equipment Module interface to the Spacecraft Power Bus through the Fuse Distribution Board (FDB) as specified in PS20008694. The Electrical Power Subsystem provides 120 Vdc primary power to the HGA Assembly via two redundantly fused, switched feeds from separate Power Distribution Unit connectors.

3.1.1.2.1.2 C&DH Electrical Interface

The DAS Panel, Recorder Equipment Module, and C&DH/Communications Equipment Module interface to the Spacecraft Command and Telemetry Bus is a redundant MIL–STD–1553B Bus. The Bus Data Unit (BDU) interfaces to both the A and B Spacecraft Command and Telemetry buses, and distributes commands to and collects telemetry from all the components located on the panel/equipment modules as shown in Figures 2 to 4 and PS20008513, PS20008583, and PS20008506. The HGA Assembly interfaces to the Spacecraft Command and Telemetry Bus via two MIL–STD–1553B Remote Terminal (RT) interfaces.

The Command and Telemetry Interface Unit (CTIU) / S–band Transponder interface carries baseband command and telemetry and timing information between the CTIU and the S–band Transponder. Interfaces are RS–422 compatible. Connections from the CTIU to S–band Transponder are shown in Figure 4. One CTIU is expected to provide active signals to both S–band Transponders. The CTIUs accept active signals from both S–band Transponders.

3.1.1.2.1.3 T–0 Umbilical Interface

The T–0 umbilical interface connects to the S–band Transponders in order to provide pre–launch hardline command capability. The command rate is 2 kbps on a 16 kHz subcarrier and the interface shall be as specified in IS20008503.

3.1.1.2.2 Mechanical Interfaces

The Communications subsystem shall conform to the requirements of Section 4 of the GIS, IS20008501, regarding coordinate systems, physical characteristics, design and construction, mounting, alignment, mechanisms, dynamic characteristics, structural criteria, and tooling. The mechanical interfaces for the equipment modules/panel are shown in PS20001411 (Recorder Equipment Module), PS20008571 (DAS Panel), and PS20008745 (C&DH/Communications Equipment Module). The interfaces for the High Gain Antenna Assembly, S–band omni antennas, and DAS Earth Coverage Antenna are given in PS20008513, PS20008583, and PS20008506, respectively.

3.1.1.2.3 Thermal Interfaces

The Communications subsystem shall conform to the requirements of Section 5 of the GIS, IS20008501, regarding thermal interfaces, environmental flux parameters, and thermal control hardware. The Thermal Control Subsystem provides both a closed–loop set of sensors and heaters controlled by the Heater Control Electronics and a set of thermistors connected to the BDU for telemetry monitoring.

3.1.2 Major Component List

The major components of the Communications subsystem are as listed in Table I.

3.2 Characteristics

3.2.1 Performance

The Communication Subsystem (COMMS) performance requirements as derived from the Control End Item (CEI) Specification are summarized in this section.

Table I. Major Components

S/S Component	Qty	Major Function
S–band Omni Antenna	2	Contingency Communications
S–band Interface Unit	1	RF signal routing/cross strapping
S–band Transponder	2	Command reception, Telemetry transmission, Navigation
S–band Filter (Band Reject)	2	RF spectrum limiting
KSA Modulator	2	Science Data modulation and coding on the TDRSS RF link
Master Oscillator	2	Frequency reference for COMMS and C&DH
High Gain Antenna Assy	1	TDRSS Communications Links
DAS Antenna	1	DAS Communications Links
DAS SSPA	2	DAS RF Transmission
DAS Upconverter	2	DAS IF to RF Frequency conversion
DAS Modulator	2	Science Data modulation and coding on the DAS RF link
DAS Filter Assembly	1	RF Spectrum limiting
DAS Waveguide Switch	1	Select Prime/Redundant SSPA

3.2.1.1 COMMS Data Communications Functions

The COMMS shall receive and demodulate all digital data transmitted to the Spacecraft from the ground.

The COMMS shall modulate and transmit all digital data to be transferred from the Spacecraft to the ground.

The COMMS shall perform the convolutional encoding (rate 1/2, constraint length 7), prior to modulation and transmission, of digital data to be transferred to the ground via the S–band Single Access (SSA), S–band Multiple Access (SMA), Ku–band Single Access (KSA), and the X–band Direct Access System (DAS) links. Interleaving of convolutional encoder symbols on the SSA return link for the 256 kbps recorder data shall be used.

The COMMS, when commanded to the proper state, shall transmit all valid downlink data provided by the Command and Data Handling Subsystem (C&DHS).

The COMMS shall provide the interface for hardline commands through the launch vehicle umbilical for prelaunch checkout.

3.2.1.2 COMMS Navigation and Tracking Support

The COMMS shall perform Doppler tracking measurements in support of TONS during scheduled TDRSS navigation tracking contacts, and shall provide the Doppler data to the Guidance, Navigation, and Control Subsystem (GN&CS) via the Command and Data Handling Subsystem (C&DHS).

The COMMS shall perform all Spacecraft functions related to TDRSS–based and GN–based S–band tracking. This includes receiving and transmitting signals for TDRSS ranging, TDRSS Doppler tracking and GN Doppler tracking.

All navigation and tracking data shall be communicated via the links shown in Table II.

Table II. Navigation Tracking Links

Navigation/ Tracking Service	Communications Link/Antenna Combinations Through Which Service Must Be Supported			
	TDRSS SSA via HGA	TDRSS SMA via HGA	TDRSS SSA via Omni	GN S-band via Omni
TONS On-board Navigation	Forward Link Only	Forward Link Only	Forward Link Only	Not Applicable
TDRSS Ranging	Forward + Return Links	Forward + Return Links	Forward + Return Links	Not Applicable
TDRSS Doppler Tracking	Return Link Only	Return Link Only	Return Link Only	Not Applicable
GN Doppler Tracking	Not Applicable	Not Applicable	Not Applicable	Return Link Only

3.2.1.3 COMMS Time Transfer Support

The COMMS shall supply the C&DHS with signals indicating the receipt time of the PN code epoch on the TDRSS forward link in support of the User Spacecraft Clock Calibration System (USCCS) described in NASA 531–TR–001.

3.2.1.4 Link Parameter Requirements

The Ku–band return link parameter requirements shown in Table III are derived from STDN 101.2 and IS20008504. The X–band (DAS) link parameter requirements are shown in Table IV. The TDRSS S–band forward and return link parameter requirements shown in Tables V and VI, respectively, are derived from STDN 101.2 and IS20008504. The S–band forward link parameters from DSN/GN/WTS to the EOS Spacecraft are shown in Table VII. The S–band return link parameters from the EOS Spacecraft to DSN/GN/WTS are shown in Table VIII.

Table III. Ku–band Subsystem Performance Characteristics

Parameter	Requirements
KSA DG2 Transmit carrier frequency (MHz)	15,003.4
EIRP (dBW)	52.2 dBW over ±0.4° beamwidth
Antenna polarization (Note 1) Antenna axial ratio (maximum	RHCP or LHCP, selectable 1.5 dB over 3 dB beamwidth
Data modulation	SQPSK
Data format	NRZ–M
Data rate restrictions Total I channel Q channel Q:I Channel Power Ratio	 150 Mb/sec 75 Mb/sec 75 Mb/sec 1:1
Data bit transition density (average)	≥25%
Consecutive data bits without a data bit transition	≤64 bits
Data asymmetry (peak)	≤3%
Data rise time (90% of initial state to 90% of final state)	≤5% of data bit duration
Data bit jitter (Note 2) To meet BER requirements Convolutionary coded NRZ symbols	 ≤ 0.37 rad
QPSK phase imbalance I/Q = 1:1	 ≤2°
Gain imbalance	≤25 DB
Phase nonlinearity (applies for all types of phase nonlinearities) (peak)	≤3° over ±80 MHz
Gain flatness (peak)	≤0.3 dB over ± 80 MHZ
Gain slope	≤0.1 dB/MHz over ± 80 MHz
AM/PM	≤12°/dB
Minimum 3 dB bandwidth prior to power amplifier	≥300 MHz
Frequency stability (peak) 1-second observation time 5-hour observation time 48-hour observation time	 $\leq 3 \times 10^{-9}$ $\leq 1 \times 10^{-7}$ $\leq 3 \times 10^{-7}$

Table III. Ku–band Subsystem Performance Characteristics (Continued)

Parameter	Requirements
Incidental AM (peak) At frequencies <2 kHz At freq. between 2 kHz and 10 kHz At frequencies ≥ 10 kHz	 ≤0.6% ≤3% ≤5%
Untracked spurious PM	≤2°
Untracked phase noise (rms) (coherent and noncoherent) I/Q = 1	≤2°
I/Q data skew (relative to requirements for I/Q data synchronization where appropriate) (peak)	≤3%

Note 1: Operational considerations may limit choice of TDRSS antenna polarization.
Note 2: The total data bit jitter is the sum of the weighted spurious and random jitter components.

Table IV. X–band (DAS) Subsystem Performance Characteristics

Parameter	Requirement
Transmit Center Frequency	8212.5 ± 0.1 MHz
Polarization	RHCP
Coverage	± 63.8° Constant Power Density
Minimum EIRP (dBW) (0 dB link margin)	Ground El. Angle (deg.) EIRP(dBW) 5 13.6 40 1.5 70 –2.6 90 –3.9
Data Modulation	SQPSK, USQPSK
Data Format	NRZ–M
Data Output Modes	1) DB only (Q:I power ratio = 1:1) 2) DB only (Q:I power ratio = 4:1) 3) DB/DDL only 4) DP1 only 5) DB/DP2 only
Data Processing	Reclock, Differential Encoding, Rate 1/2 Convolutional Encoding
Gain Flatness	≤ 0.3 dB peak over ±112.5 MHz
Phase Nonlinearity	≤ 5° peak over ±112.5 MHz
3 dB Bandwidth	≤ 375 MHz

Table IV. X–band (DAS) Subsystem Performance Characteristics (Continued)

Parameter	Requirement
Gain Slope	$\leq$ 0.1 dB/MHz
AM/PM	$\leq$ 12°/dB
Untracked Spurious PM	$\leq$ 2° RMS
Phase Imbalance	$\leq$ 2°
Gain Imbalance	$\leq$ 0.25 dB
Relative Phase Between I and Q–Channel	90 ± 2°
Data Asymmetry	$\leq$ 3%
Data Rise Time	$\leq$ 5% of symbol duration but not less than 800 psec
Data Bit Jitter	$\leq$ 0.37 Radian
In Band Flux Density	
$0° \leq \theta_{EL} \leq 5°$	≤ -148 dBW/m^2/4 kHz
$5° < \theta_{EL} \leq 25°$	$\leq -148 + (\theta_{EL} - 5)/2$ dBW/m^2/4 kHz
$25° < \theta_{EL} \leq 90°$	≤ -138 dBW/m^2/4 kHz
Spurious Output Out–of–band	≤ -60 dBc
Phase Noise	
1 – 10 Hz	< 15° RMS
10 – 100 Hz	< 7.5° RMS
100 Hz – 1 kHz	< 2.0° RMS
1 kHz – 150 MHz	< 2.0° RMS
Frequency Stability	
1 Second Average	$\pm 3 \times 10^{-9}$
5 Hour Average	$\pm 1 \times 10^{-7}$
48 Hour Average	$\pm 3 \times 10^{-7}$
Bit Error Rate (BER)	1×10^{-5}
Incidental AM	$\leq$ 0.6% at $\leq$ 2 kHz $\leq$ 3% at $\leq$ 2 kHz to 10 kHz $\leq$ 5% at >10 kHz
Carrier Suppression	$\geq$ 30 dB

Table V. S-band Forward Link Signal Parameters from TDRSS to EOS Spacecraft

Parameter	Definition
TDRSS transmit carrier frequency (MHz)	F
Carrier frequency arriving at user Spacecraft (MHz) (Note 1)	F_R
Ratio of command channel power to range channel power	+10 ± 0.5 dB
Range Channel (Q)	
Carrier	Command channel carrier delayed $\pi/2$ radians
PN modulation	PSK, $\pm\pi/2$ radians
Carrier suppression	30 dB minimum
PN chip rate	Same as command channel PN chip rate
PN code length (chips)	$(2^{10} - 1) \times 256$
PN code epoch reference	All 1's condition synchronized to the command channel PN code
PN code family	Truncated 18-stage shift register sequences
Command Channel (I)	
Carrier frequency (Hz)	F
PN Modulation	PSK, $\pm\pi/2$ radians
Carrier suppression	30 dB minimum
PN code length (chips)	$2^{10} - 1$
PN code family	Gold codes
F (MHz) nominal	2106.4
PN chip rate (chip/sec)	$\left[\frac{31}{221 \times 96}\right] \times F$
Data format	NRZ-M
Data rate	125, 1000, 10000 bps
Data modulation	Modulo-2 added asynchronously

Notes

1. During periods of Doppler compensation, $F_R = f_o \pm E$; where f_o = 2106.4 MHz (nominal center frequency of the Spacecraft receiver) and E defined as follows. Doppler compensation shall be available for $R \leq 12$ Km/sec. Forward link Doppler compensation for MA and SSA shall not increase the peak phase error of a receiver (with a second-order Costas loop BL=32 Hz, at C/No = 33 dB–Hz in the command channel) more than 3 degrees relative to the phase error for a Doppler–free carrier.

	Signal Acquisition	Signal Tracking
Service	$\ddot{R} < 15$ m/sec^2	$\ddot{R} < 50$ m/sec^2
MA and SSA	$E = 700 \times [\ddot{R}/10]$	

Table V. S–band Forward Link Signal Parameters from TDRSS to EOS Spacecraft (Continued)

Parameter	SMA	SSA
Field–of–view (each TDRS)	± 13 degrees conical	± 22.5 deg. E–±W 31 deg N–S
TDRS antenna polarization	LHC	LHC or RHC, selectable
TDRS antenna axial ratio (maximum)	1.5 dB over 3–dB beamwidth	1.5 dB over 3–dB beamwidth
TDRS signal EIRP (minimum)	34 dBW	43.6 dBW normal mode 46.1 dBW high power
RF bandwidth (3 dB minimum)	6 MHz	10 MHz
Command Channel Radiated Power/ Range Channel Radiated Power	10 ± 0.5 dB	10 ± 0.5 dB
Modulator phase imbalance (BPSK only) (peak)	±3°	±3°
Modulator gain imbalance	±0.25 dB	±0.25 dB
Relative phase between command and range channels	90 ± 3°	90 ± 3°
Phase nonlinearity (peak)	±0.12 radian over ±2.1 MHz	±0.15 radian over ±7.0 MHz
Gain flatness (peak)	±1.2 dB over ±2.1 MHz	±0.8 dB over ±7 MHz
Gain slope (peak)	±0.1 dB/MHz	±0.1 dB/MHz
AM/PM	≤13°/dB	≤10°/dB
Spurious PM	≤1° rms	≤1° rms
Spurious outputs	≥27 dBc	≥27 dBc
Incidental AM (peak)	≤2%	≤2%
Phase Noise		
1 Hz - 10 Hz	≤1.5° rms	≤1.5° rms
10 Hz - 32 Hz	≤1.5° rms	≤1.5° rms
32 Hz - 1 kHz	≤4.0° rms	≤4.0° rms
1 kHz - 3 MHz	≤2.0° rms	-----
1 kHz - 6 MHz	-----	≤2.0° rms
Data transition included PM (At transition density = 100%)	2° rms	2°± rms
PN chip jitter (including effects of Doppler compensation	≤1° rms	≤1° rms
Command/range channel PN chip skew (peak)	≤0.01 chip	≤0.01 chip
PN chip asymmetry (peak)	≤0.01 chip	≤0.01 chip
PN chip rate (relative to absolute coherence with carrier rate)	≤0.01 Hz peak at PN rate	≤0.01 Hz peak at PN rate
Data bit jitter	≤1% peak	≤1% peak
Data asymmetry	±3% peak	±3% peak
Data transition time	≥35 nsec, ≤5%	≥8 nsec, ≤5%

Table VI. EOS S-band Return Link Signal Parameters to TDRSS

Parameter	Requirement
Spacecraft Transmit Carrier Freq., F_1	2287.5 MHz (nominal)
Q/I Channel Power Ratio	1:1, 2:1, or 4:1, commandable
EIRP (dBW)	25.0 dBW (HGA); 0.0 dBW (Omni)
Carrier reference (Hz)	
Mode 1 and 3	(240/221) x Spacecraft Receive Frequency (F_R)
Mode 2	Spacecraft Master Oscillator
DG1	
PN modulation, Modes 1 and 2	SQPN (Note 1)
PN code length (chips)	
Mode 1	$(2^{10} - 1) \times 256$
Mode 2	$2^{11} - 1$
PN code epoch reference	
Mode 1	
I Channel	All 1's condition synchronized to all 1's condition of received forward link range channel.
Q Channel (Note 2)	All 1's condition delayed x + 1/2 PN chips relative to I channel epoch.
Mode 2	
I Channel	Spacecraft master oscillator
Q Channel	Delayed 1/2 PN chip period relative to I Channel PN code epoch
PN code family	
Mode 1	Truncated 18-stage shift register sequences
Mode 2	Gold codes
Data Format	NRZ-M
Data modulation Modes 1 and 2	Modulo-2 added asynchronously to PN code

Table VI. EOS S–band Return Link Signal Parameters to TDRSS (Continued)

Parameter	Requirement	
	SMA	SSA
PN chip rate (chips/sec)	[31/(240 x 96)] x F_1	[31/(240 x 96)] x F_1
Mode 1 data rate, maximum (Note 3)		
I Channel	16 kbps	16 kbps
Q Channel	16 kbps	16 kbps
Mode 2 data rate, maximum (Note 3)		
I Channel	16 kbps	16 kbps
Q Channel	16 kbps	16 kbps
Mode 3 data rate, maximum		
I Channel	N/A	16 kbps
Q Channel	N/A	256 kbps
Data asymmetry (peak)	≤3%	≤3%
Data rise time (90% of initial state to 90% of final state)	≤5% of symbol time	≤5% of symbol time
PN chip jitter		
To meet tracking requirements	≤1° rms	≤1° rms
To meet BER requirements	4% peak	4% peak
Data bit jitter (radians) To meet BER requirements Coded NRZ	≤0.37 rad	≤0.37 rad
QPSK phase imbalance DG1		
Data Rate < 3 kb/s	≤5 degrees	≤5 degrees
Data Rate > 3 kb/s	≤6 degrees	≤6 degrees
Gain imbalance	≤0.25 dB	≤0.25 dB
Phase nonlinearity (applies for all types of phase nonlinearities) (peak)	≤3° over ±2.1 MHz	≤3° over ±3.5 MHz
Gain flatness (peak)	≤0.3 dB over ±2.1 MHz	≤0.3 dB over ±3.5 MHz
Gain slope (peak)	≤0.1 dB/MHz over ±2.1 MHz	≤0.1 dB/MHz over ±3.5 MHz

Notes:

1. When identical data is being transmitted on the I and Q-Channels (single data channel configuration for Modes 1 or 2), the I-Channel carrier phase shall lead the Q-Channel phase by Pi/2 radians.
2. Q-Channel PN code shall be identical to I-Channel PN code offset by >20,000 chips.
3. Rate 1/2 convolutional coding shall be used in all cases.

Table VI. EOS S–band Return Link Signal Parameters to TDRSS (Continued)

Parameter	Requirement	
	SMA	SSA
AM/PM	≤12 deg dB	≤12 deg dB
Frequency stability (peak)		
1-second average time	≤3 x 10E-9	≤3 x 10E-9
5-hour observation time	≤1 x 10E-7	≤1 x 10E-7
48-hour observation time	≤3 x 10E-7	≤3 x 10E-7
Incidental AM (peak)	≤5%	≤5%
Untracked spurious PM DG1	≤2 degrees rms	≤2 degrees rms
Minimum 3 dB bandwidth	≥4.5 MHz or two times maximum symbol rate, whichever is larger	DG1: ≥4.5 MHz or two times maximum symbol rate, whichever is larger
Untracked phase noise (coherent/noncoherent) DG1		
DR < 3 kb/s	≤2 degrees rms	≤2 degrees rms
DR >3 kb/s	≤3 degrees rms	≤2 degrees rms
I/Q data skew (relative to requirements for I/Q data synchronization where appropriate)	≤3% rms	≤3% rms
I/Q PN skew (relative to 0.5 chip)	≤0.01 chip	≤0.01 chip
PN chip rate, Mode 2 (relative to absolute coherence with carrier rate)	≤0.01 Hz peak at PN rate	≤0.01 Hz peak at PN rate
PN power suppression (noncoherent and coherent turnaround)	≤0.3 dB	≤0.3 dB

Table VII. S–band Forward Link Signal Parameters from DSN/GN/WTS to EOS Spacecraft

Parameter	Value
Command Data Rate	2000 bps
Subcarrier Frequency	16 kHz ± 0.001 percent (Note 1)
Modulation Signal Type	NRZ-M
Carrier Modulation	Phase Modulation
Carrier Modulation Index	0.7 ± 10% radians
Uplink Center Frequency	2106.4 MHz ± Doppler Shift
Antenna Diameter	26 Meters, DSN subnet 9 Meters, GN and 6 Meters, Wallops Island.
Polarization	RHC
Minimum EIRP	GN: 66.0 dBW; DSN: 73.5 dBW; WPS: 60.0 dBW

Notes:

1. The 2000 bps command data bit clock will be coherent with the 16 kHz subcarrier.

Table VIII. S-band Return Link Signal Parameters From EOS Spacecraft to DSN/GN/WPS

Information			Baseband Information			Subcarrier Information			Carrier	WPS Reqd. Equiv. Carrier Pwr. at Data Threshold (dBM)*
Link No.	Data	Rate	Format	Mod.	Freq.	Format	Mod.	Freq.	Freq.	
Subcarrier:										
10A	Real-time	16kbps	N/A	N/A	N/A	Biϕ-S	PSK	1.024	Mode 1	-112.7
10B	telemetry	16 kbps				Biϕ-S	β=0.8 rad	MHz	(Coherent)	-112.8
10C	(Always Present)	16 kbps				Biϕ-S	± 5%	± 0.001%	240/221 x U/L Freq	-112.8
10 D		1 kbps				Biϕ-S			or Mode 2	-124.8
10 E		1 kbps				Biϕ-S			(Non-Coherent) 2287.5MHz ± 0.001%	-124.8
Baseband:										
10B	SCC Dump	16 kbps	Biϕ-S	PM β=1.0 rad (Peak Rectangular) ± 5%	N/A	N/A	N/A	N/A	Mode 1 or Mode 2	-121.9
10C	Recorder Playback	512 kbps	Biϕ-S	Same as 10B	N/A	N/A	N/A	N/A	Mode 1 or Mode 2	-106.8
10E	SCC Dump	1 kbps	Biϕ-S	Same as 10B	N/A	N/A	N/A	N/A	Mode 1 or Mode 2	-133.9

* Equivalent carrier power measured at the Preamp for a BER = 10^{-5}

3.2.1.5 Command and Telemetry Links

The forward command and return telemetry and science links shall be as shown in Tables IX and X, respectively.

Table IX. Forward (Command) Links

Forward Link Service	Link	Antenna	Data Rate (Minimum Required)	Usage
TDRSS SMA	1	HGA (LHC)	1 kbps	Low Rate commands, Contingency
TDRSS SSA	3	HGA (LHC/RHC)	10 kbps	High Rate commands Normal Mode
TDRSS SSA	5	Omni (RHC)	125 bps	Contingency Commanding
DSN/GN/WTS S-Band	9	Omni (RHC)	2 kbps	Emergency Commanding
Hard-Line	—	Umbilical	2 kbps	Commands from GSE (Pre-Launch)

Notes:

1. A Contingency is defined as a non–normal operational condition such as the need to command the Spacecraft during non–SA contact periods, or as the need to reconfigure the Spacecraft using the S–band Omni antennas.
2. An Emergency is defined as a non–normal operational condition which forces the use of the GN instead of any TDRS.

Table X. EOS Return Link Telemetry, Science and Tracking Modes

Mode	Link No.	Service	Data Mode	Rate	Antenna	Mod.	Track-ing (3)	PN Code
TDRSS Normal	2A	TDRS-SMA DG1, M1,2	Real-Time H/K Real-Time H/K	16 kbps (4) 16 kbps	HGA (LHC)	SQPSK(6)	range/ Doppler	On
TDRSS Normal	2B	TDRS-SMA DG1, M1,2	Real-Time H/K Diagnostic	16 kbps (4) 16 kbps	HGA (LHC)	SQPSK(6)	range/ Doppler	On
TDRSS Normal	4A	TDRS-SSA DG1, M1,2	Real-Time H/K Real-Time H/K	16 kbps 16 kbps	HGA (LHC/RHC)	SQPSK(6)	range/ Doppler	On
	4B	TDRS-SSA DG1, M1,2	Real-Time H/K Diagnostic	16 kbps 16 kbps	HGA (LHC/RHC)	SQPSK(6)	range/ Doppler	On
	4C	TDRS-SSA DG1, M3	Real-Time H/K Playback H/K	16 kbps 256 kbps (7)	HGA (LHC/RHC)	QPSK(6)	range/ Doppler	On, I Ch
TDRSS Contin-gency	6A	TDRS-SSA DG1, M1,2	Real-Time H&S Real-Time H&S	1 kbps (4) 1 kbps	Omni (RHC)	SQPSK(6)	range/ Doppler	On
	6B	TDRS-SSA DG1, M1,2	Real-Time H&S Diagnostic	1 kbps (4) 1 kbps	Omni (RHC)	SQPSK(6)	range/ Doppler	On
TDRSS Normal	8A	TDRS-KSA DG2	Playback Sci. (5) Playback Sci.	75 Mbps 75 Mbps	HGA (LHC/RHC)	SQPSK	no	Off
	8C	TDRS–KSA DG2	Real–Time Sci.(5) Real–Time Sci.	75 Mbps 75 Mbps	HGA (LHC/RHC)	SQPSK	no	Off
Emer-gency	10A	DSN/GN/WPS	Real-Time H/K	16 kbps	Omni (RHC)	(1)	Doppler	Off
	10B	DSN/GN/WPS	Real-Time H/K Diagnostic	16 kbps 16 kbps	Omni (RHC)	(2)	Doppler	Off
	10C	DSN/GN/WPS	Real-Time H/K Playback H/K	16 kbps 512 kbps	Omni (RHC)	(2)	Doppler	Off
	10D	DSN/GN/WPS	Real-Time H&S	1 kbps	Omni (RHC)	(1)	Doppler	Off
	10E	DSN/GN/WPS	Real-Time H&S Diagnostic	1 kbps 1 kbps	Omni (RHC)	(2)	Doppler	Off
DAS	12A	DAS DB	Real–Time Sci. Real–Time Sci.	12.5 Mbps 12.5 Mbps	DAS (RHC)	SQPSK	N/A	N/A
	12B	DAS DB'	Real–Time Sci. Real–Time Sci.	12.5 Mbps 12.5 Mbps	DAS (RHC)	SQPSK(6)	N/A	N/A
	14A	DAS DB/DDL	Real–Time Sci. Real–Time Sci.	12.5 Mbps 105 Mbps	DAS (RHC)	QPSK	N/A	N/A
	16A	DAS DP1	Playback Sci. (5) Playback Sci.	75 Mbps 75 Mbps	DAS (RHC)	SQPSK	N/A	N/A
	18A	DAS DB/DP2	Playback Sci. Playback Sci.	12.5 Mbps 105 Mbps	DAS (RHC)	QPSK	N/A	N/A

Notes:

1. Modulation is PSK on 1.024 MHz subcarrier.
2. Modulation is PSK on 1.024 MHz subcarrier and PM on carrier.
3. There is no range or Doppler tracking for Mode 2 (M2) operations.
4. There is no CEI requirement to process the I channel.
5. The I and Q data originateS from a single data source.
6. The Q/I power ratio is 4:1.
7. Interleaving of convolutional encoder symbols

3.2.1.6 High Gain Antenna

The Spacecraft shall be capable of communications via any operational TDRS which has a clear line–of–sight to the Spacecraft and is within the angular range of the HGA motion limits specified in PS20008513.

HGA contact availability with TDRS East and TDRS West shall be sufficient to allow scheduling of 20 minutes of SA service in two or fewer uninterrupted intervals each orbit. The HGA shall be capable of communications with a TDRS for 67% of the time, including Zone of Exclusion outages.

The COMMS shall implement pointing for the HGA. The COMMS shall point the HGA in response to the latest azimuth and elevation data calculated by the GN&CS and commanded by the C&DHS. The command shall be in the form of a direction and number of steps for both azimuth and elevation. The COMMS shall return azimuth and elevation status via C&DHS.

The COMMS shall preclude any damage which may impair HGA operability due to command errors.

3.2.1.7 COMMS Link Margins

As a goal, the COMMS shall be designed to achieve link margins of 3 dB or greater with a Bit Error Rate (BER) of $\leq 10^{-5}$ on all required RF communications links except as modified by the antenna coverage requirements definition.

3.2.1.8 COMMS Bit Error Rate

The COMMS shall contribute a bit error rate $\leq 10^{-10}$ **(TBR–1)** to the transported data due to on–board error mechanisms.

3.2.1.9 Telemetry Allocation

The COMMS contribution to the total health and safety telemetry bandwidth shall be at or below 125 bits/second, not including fill data. COMMS contribution to the total housekeeping bandwidth shall be at or below 222 bits/second not including fill data.

3.2.2 Operational Modes

Table XI lists the minimum communications capability for the six Spacecraft operating modes. The following sections describe the operating modes and the COMMS requirements.

3.2.2.1 Ground Test Mode

The Ground Test Mode is used in the prelaunch phase of the mission, following integration of the Spacecraft with the launch vehicle (i.e., this is not a mode used during Spacecraft Bus integration and test). In this mode the Spacecraft is essentially in a "check–out" state, receiving power via the launch vehicle "T–minus–zero" (T–0) umbilical. During this mode, the COMMS shall accommodate a hardline subcarrier modulated command link through the launch vehicle T–0 umbilical.

Table XI. Minimum COMMS Capability

Mode:	Ground Test Mode	Launch Ascent Mode	Survival Mode	Delta–V Mode	Standby Mode	Science Mode	Safe Mode
TDRSS Forward							
SSA	NA	NA	125 bps	125 bps	125 bps	10 kbps	125 bps
SMA	NA	NA	NR	NR	NR	1 kbps	NR
TDRSS Return							
SSA	NA	NA	1 kbps	1 kbps	1 kbps	272 kbps	1 kbps
SMA	NA	NA	NR	NR	NR	16 kbps	NR
KSA	NA	NA	NR	NR	NR	150 Mbps	NR
GN (S–band)							
Forward	NA	2 kbps	2 kbps	2 kbps	2 kbps	2 kbps	2 kbps
Return	NA	528 kbps	528 kbps	528 kbps	528 kbps	528 kbps	528 kbps
HARDLINE (to GSE)							
Forward	2 kbps	NA	NA	NA	NA	NA	NA
Return	NA	NA	NA	NA	NA	NA	NA
HARDLINE (to LV)							
Forward	NA	NA	NA	NA	NA	NA	NA
Return	NA	NA	NA	NA	NA	NA	NA
TONS	NA	NA	NR	NR	NR	Yes	NR
DB (X–band)	NA	NA	NA	NR	NA	12.5 Mbps	NR
DDL (X–band)	NA	NA	NA	NR	NA	105 Mbps	NR
DP1 (X–band)	NA	NA	NA	NR	NA	150 Mbps	NR
DP2 (X–band)	NA	NA	NA	NR	NA	105 Mbps	NR

NA = Not applicable to operating mode

NR = Not required at minimum functionality, but available at higher levels of functionality

Notes: (1) For Standby and Safe Modes TDRSS forward 1 kbps and 10 kbps links and return 16 kbps and 256 kbps links available when 3–degree earth pointing maintained.

(2) Pointing of 0.4 degrees required for science data.

3.2.2.2 Survival Mode

The Survival Mode is a minimal power or power critical mode in which only essential Spacecraft functions (e.g., low–rate commanding/telemetry, survival heaters) shall be supported.

The COMMS shall maintain or reacquire S–band communications links with TDRSS and/or DSN/GN/WTS through the omni antennas. The COMMS shall provide for the maintenance of the TONS link to support coarse orbit determination via TONS, or support the uplink of backup ephemeris for orbit determination, as applicable.

3.2.2.3 Delta–V Mode

The Delta–V mode is a "propulsive" mode used to either raise altitude from the injection orbit to mission operational altitude, to circularize the mission orbit, or to provide periodic correction to the mission orbit. This mode is used during the Orbit Acquisition, Operational Initialization, and Operational mission phases and will utilize the monopropellant engines.

The COMMS shall maintain and reacquire (as necessary) the S–band forward and return links with TDRSS and/or DSN/GN/WTS. COMMS shall also maintain and reacquire S–band links through the omnis. The COMMS shall provide for the maintenance of the TONS link to support coarse orbit determination via TONS, or support the uplink of backup ephemeris for orbit determination, as applicable. For higher Delta–V submode levels HGA Ku–band return link data will be provided consistent with HGA pointing.

3.2.2.4 Standby Mode

The Standby Mode is a "non–science" mode that is used during subsystem checkout, during quiescent periods, or as backup to the Science Mode.

Standby Mode is a primary mode during the Orbit Acquisition Initialization, Orbit Acquisition, and Operational Initialization Phases. During the Orbit Acquisition Initialization Phase, the Spacecraft will be in Launch/Ascent Mode until it receives ground commands to enter Standby Mode, nominally after deployment of the HGA.

As a backup mode in the Operational Phase, Standby Mode is used when a problem arises with the ability to collect or transmit instrument science data.

Instrument science data collection and transmission is not supported in Standby Mode. Standby Mode has full power resources so that housekeeping and instrument loads will not be shed upon entering this mode. As required during subsystem checkout, both primary and redundant units of components may be powered.

As a minimum, the COMMS shall support the maintenance of S–band communications links with TDRSS and/or GN via the omnis. Although not a minimum requirement, the acquisition and maintenance of a TDRSS HGA S–band link will be accommodated as capable once the HGA is deployed during the Orbit Acquisition Initialization Phase. The COMM subsystem shall provide for the maintenance of the TONS link to support coarse orbit determination via TONS and it shall also support the uplink of backup ephemeris for orbit determination, as applicable.

3.2.2.5 Science Mode

The Science Mode is the primary mode used during the Operational Mission phase. During the Operational Initialization Phase, it is one of several primary modes. While in Science Mode, the Spacecraft will provide the full complement of resources necessary to meet science mission objectives during this mode. Science Mode is used for instrument check–out activities during the latter portion of the Operational Initialization Phase because full resources, including high–rate data handling, are required for this activity.

The COMMS shall maintain and reacquire (as necessary) HGA Ku–band and S–band forward and return links with TDRSS and/or DSN/GN/WTS. Both high–rate and low–rate S–band links shall be supported. The COMMS shall provide for the maintenance of the TONS link to support fine orbit determination via TONS, or support the uplink of backup ephemeris for orbit determination, as applicable. Instrument check–out activities shall be supported.

3.2.2.6 Safe Mode

The Safe Mode is a state in which the Spacecraft is capable of operating partially or completely independent of the SCC depending on the problem which caused the entry into Safe Mode.

The COMMS shall support the maintenance and reacquisition of low–rate S–band communications links through the omni antenna with TDRSS and/or DSN/GN/WTS. The TONS link shall not be supported at lower mode levels. The COMMS shall be capable of performing these minimum functions without SCC software or ACE support.

3.2.2.7 Launch/Ascent Mode

The Launch/Ascent Mode is the Spacecraft's operational configuration during and immediately following the boost to the injection orbit on the launch vehicle. Once separation from the launch vehicle is detected by onboard logic and telemetry monitoring, the Spacecraft will use onboard logic to perform four early mission activities, including: (1) an attitude maneuver to obtain an earth–oriented attitude, (2) deployment of the solar array to support the bus load and begin battery recharge, (3) establishment of an S–band communication link, primarily with TDRSS via the omni antennas, and (4) deployment of the high gain antenna.

During the Orbit Acquisition Initialization Phase, the establishment of low–rate S–band communications links via the omnis with TDRSS and/or GN shall be supported. The maintenance of these links will also be supported. The establishment of an S–band communication link via the HGA with TDRSS shall be supported (after successful HGA deployment), as well as the maintenance of these links. The COMM subsystem shall support the uplink of backup ephemeris or orbit determination. The COMM subsystem shall also provide for the acquisition of the TONS link via the omnis and/or the HGA and maintenance of the link to support orbit determination via TONS.

3.2.3 Command Reception Operations

3.2.3.1 SSA/SMA Command Links via the HGA

The S–band transponders shall be powered on at all times for command reception and the HGA shall continuously track a selected TDRS within the pointing constraints. Upon initiation of an SSA/SMA forward link by TDRS, the transponder shall automatically acquire the forward link, despread and demodulate the signal and forward the baseband signal to the C&DH subsystem. For TONS operation the C&DH will provide the receiver frequency control word to allow S–band transponder acquisition of the uncompensated forward link. For TDRSS compensated forward link operation, the C&DH will set the receiver offset frequency word to zero.

3.2.3.2 SSA Command Link via Omni Antennas (Contingency)

The S–band transponders shall be powered on at all times for command reception. When the SSA service is scheduled within the constraints of the omni antenna coverage and TDRS sends commands to the EOS Spacecraft, the transponder shall be available for command reception. Upon initiation of an SSA forward link by TDRS, the transponder shall automatically acquire the forward link, despread and demodulate the signal and forward the baseband to the C&DH subsystem. For TONS operation the C&DH will provide the receiver frequency control word to allow S–band transponder acquisition of the uncompensated forward link. For TDRSS compensated forward link operation, the C&DH will set the receiver offset frequency word to zero.

The receive omni system for TDRS SSA shall have greater than 70% **(TBR–2)** of the 4π steradian coverage with 3 dB link margin and greater than 80% **(TBR–3)** coverage with 0 dB link margin.

3.2.3.3 DSN/GN/WTS Command Link via Omni Antenna (Emergency Backup)

The S–band transponders shall be powered on at all times for command reception. Upon initiation of a forward link by the DSN/GN/WTS, and in the absence of the TDRS forward link, the transponder shall automatically acquire the forward link, demodulate the command uplink signals (excluding the ranging channel), and forward the baseband signal to the C&DH subsystem.

3.2.4 Telemetry Transmission Operations

The primary on–orbit housekeeping telemetry path shall be via the TDRSS SSA or SMA Return Service with DSN/GN/WTS Services available as an emergency backup. The DSN/GN/WTS links support the same data rates as the TDRSS SSA normal link configurations with the exception of the higher rate available for the telemetry recorder playback.

3.2.4.1 Science Data Transmission Operations

The COMMS shall support the EOS Spacecraft science data services by providing encoding, modulation and transmission functions.

The primary science data return link shall be supported via the TDRSS KSA service. The HGA shall be RHCP or LHCP, selectable, for the KSA return link. The KSA link will provide Ku–band real–time and playback science downlink services to Instruments in accordance with Table XII.

Table XII. Science Data Downlink Service Allocations

	ASTER	CERES	MISR	MOPITT	MODIS	Ancillary Data
DDL	✓					
DB					✓	✓
DP	✓	✓	✓	✓	✓	✓
Ku–band Real–time	✓	✓	✓	✓	✓	✓
Ku–band Play-back	✓	✓	✓	✓	✓	✓

The COMMS shall allow the the simultaneous transmission of the KSA return link and either the SSA or SMA return link.

3.2.4.2 Direct Access Service

The COMMS shall provide an X–band Direct Access Service, including a direct downlink (DDL), broadcast (DB), and playback (DP) capability for the Instruments as shown in Table XII. These services shall not rely on HGA operability.

3.2.4.2.1 DAS Modes

During science operations, the Spacecraft shall accommodate the commanded selection of each of the following DAS modes at any duty cycle, when measured over one orbit, up to 100 percent:

1. DDL, DB and DP Off
2. DB only – Q:I Power Ratio = 1:1
3. DB only – Q:I Power Ratio = 4:1
4. DB and DDL
5. DP1 only
6. DB and DP2

The DB, DDL, and DP services may be interrupted momentarily during DAS mode transitions.

3.2.4.2.2 DAS Transmit Polarization

The DB, DDL, and DP services shall be transmitted using Right Hand Circular Polarization.

3.2.4.2.3 Direct Broadcast (DB) Service

The COMMS shall provide the DB service whenever DAS modes 1, 2, 3, or 5 are selected.

3.2.4.2.3.1 DB Data Input

The COMMS shall accept DB data from the C&DHS on a single channel.

3.2.4.2.3.2 DB Data Transmission

The COMMS shall transmit the DB data stream in real time via a QPSK-modulated X-band downlink. The I- and Q- channels shall contain identical data for modes 1 and 2. DB data shall appear only on the I–channel for modes 3 and 5.

3.2.4.2.4 Direct Downlink (DDL) Service

The COMMS shall provide the DDL service whenever DAS mode 3 is selected.

3.2.4.2.4.1 DDL Data Input

The COMMS shall accept DDL data from the C&DHS on a single channel.

3.2.4.2.4.2 DDL Data Transmission

The COMMS shall transmit the DDL data stream in real time via a QPSK-modulated X-band downlink. DDL data shall appear only on the Q-channel for DAS mode 3.

3.2.4.2.5 Direct Playback (DP) Service

The COMMS shall provide the DP service whenever DAS modes 4 and 5 are selected.

The DP service will be utilized only as a backup in case of any interruption of the ability to transmit science data to ground users via the TDRSS Ku-band return link service. The DP service is not required to be available simultaneously with the TDRSS Ku-band return link service.

3.2.4.2.5.1 DP Data Input

The COMMS shall accept DP data from the C&DHS on a single channel.

3.2.4.2.5.2 DP Data Transmission

The COMMS shall transmit the DP data stream via a QPSK-modulated X-band downlink. Data on the I- and Q- channels shall be bit-interleaved for mode 4. DP data shall appear only on the Q–channel for DAS mode 5.

3.2.4.2.6 Ground Station Interfaces

The COMMS shall transmit the DAS data such that, in the direction of a ground antenna with the given elevation angle, the following Effective Isotropically–Radiated Power (EIRP) is achieved:

Ground Elevation Angle (deg)	EIRP (dBW)
5	13.6
40	1.5
70	–2.6
90	–3.9

3.2.5 Physical Characteristics

3.2.5.1 Mass

The mass of the Communications subsystem shall not exceed 450 lbs. The center–of–mass, products of inertia, and mass estimate accuracies shall be as defined in the mechanical portion of IS20008501.

3.2.5.2 Durability

The COMMS shall be made up only of materials and components capable of withstanding for five years environmental conditions specified in 3.2.8 without evidence of damage as defined below.

The COMMS shall also be capable of withstanding, without evidence of physical damage (as defined below), any wear due to the functioning of the system.

Damage shall be considered to be any change in the Communications subsystem or components which may degrade subsystem performance to levels below those specified herein.

3.2.5.3 Layout and Dimensions

The COMMS layout and maximum component dimensions shall be in accordance with the COMMS major component performance specifications listed in 2.2.1.

3.2.5.4 Maintainability Impact on Design

To the extent practical, the Communications subsystem shall facilitate maintenance by being functionally, mechanically, and electrically independent from all other Spacecraft elements.

3.2.6 Power Characteristics

The subsystem shall operate per the performance requirements specified herein when supplied power as specified in the power portion of IS20008501. The orbit average end–of– life power of the Communications subsystem shall not exceed 350 watts.

3.2.7 Reliability

The probability of mission success (P_s) for the Communications subsystem including DAS functions shall be at least .98 for a five–year mission life.

3.2.7.1 Storage Restrictions

Limited–life components which may require change–out during storage shall be identified and tracked in the Critical Items List, 20008652.

3.2.7.2 Reserved

3.2.7.3 Failure Tolerance

The COMMS shall be designed such that no single failure prevents meeting mission requirements.

3.2.7.4 Failure Propagation Restrictions

The COMMS shall be designed such that no single failure propagates other failures.

3.2.8 Environmental Conditions

The Communications subsystem components shall remain undamaged during, and following exposure to the protoflight environmental test levels corresponding to the environments defined in IS20008501 Section 6.

The Communications subsystem and its components shall remain undamaged during, and following exposure to the acceptance environmental test levels corresponding to the environments defined in IS20008501 Section 6.

Test levels shall be as defined in the Verification Specification, PS20005404.

Damage shall be as defined in Section 3.2.5.2.

3.2.8.1 Storage, Integration and Test

The Communications subsystem shall be capable of being held for testing or storage for the period defined in IS20008501 Section 6, under the storage conditions stated there for: [1] thermal, [2] contamination, [3] humidity, and [4] electro–magnetic interference (EMI), without suffering any damage as defined in Section 3.2.5.2.

3.2.8.2 Shipment

The Communications subsystem shall abide by the following transportation environmental requirements as defined in IS20008501 Section 6: [1] thermal, [2] contamination, [3] humidity, [4] EMI, [5] loads, and [6] shock.

3.2.8.3 Launch

The Communications subsystem shall abide by the following launch environmental requirements as defined in IS20008501 Section 6: [1] thermal, [2] contamination, [3] Radiated RF, [4] EMI, [5] loads, [6] shock, and [7] pressure [8] acoustic vibration, and [9] lightning.

3.2.8.4 On–orbit

The Communications subsystem shall abide by the following on–orbit environmental requirements as defined in IS20008501 Sections 5 and 6: [1] thermal, [2] contamination, [3] pressure, [4] EMI, [5] loads, [6] shock, [7] orbital debris, [8] micrometeoroids, [9] vibration, [10] charged particle, [11] atomic Oxygen, [12] magnetic, and [13] electro–static discharge.

3.2.8.5 Electromagnetic Radiation

The Communications subsystem shall be compatible with its specified operating environment and meet the requirements of the EOS Spacecraft, as specified by the EMC Control Plan, PN20005869.

The Communications subsystem and its components shall comply with the ionizing radiation design requirements specified in the environments section of IS20008501.

3.2.8.6 Single Event Upset (SEU) and Single Event Latchup

The COMMS shall comply with the cosmic ray charged particles and single event latchup requirements specified in IS20008501.

3.3 Design and Construction

The fabrication requirements of NHB 5300.4 (A, G–K) shall be implemented.

3.3.1 Material, Processes, Parts, and Finishes

All materials, manufacturing processes, parts and finishes shall be selected in accordance with the corresponding requirements in the mechanical section of IS20008501.

3.3.2 Nameplates and Product Marking

All Communications subsystem elements shall be labeled in accordance with IS20008501.

3.3.3 Workmanship

Workmanship during fabrication of the Communications subsystem components shall be in accordance with NASA standards as specified in NHB 5300.4 (3A, 3G–3K).

3.3.4 Interchangeability

Communications subsystem elements shall be interchangeable as defined in the mechanical section of IS20008501.

3.3.5 Safety

Personnel safety shall be maintained in all phases of the design, manufacturing, testing, and use. The design shall meet the factors of safety presented in the mechanical section of IS20008501.

The Communications subsystem shall meet the requirements of the Safety section of the Product Assurance Implementation Plan (PAIP), PN20005397.

3.3.5.1 Pressurized Vessels

The COMMS includes no pressurized elements.

3.4 Documentation

3.4.1 Specifications

All parent and component specifications associated with this specification are shown in the EOS–AM Spacecraft Specification Tree, 20008536.

3.4.2 Drawings

[1] Drawings shall be prepared in accordance with DOD–D–1000 (level 2) and DOD–STD–100.

[2] Installation drawings shall be generated for all major subassemblies which are mounted to the primary structure.

[3] The installation of drawings shall identify the minimum clearances between the subassembly and primary structure consistent with the level of assembly at the time of installation.

[4] The installation drawings shall outline the major steps of the assembly and identify the appropriate procedures used in the installation.

3.4.3 Reserved

3.4.4 Test plans

a. PN20008664	Comprehensive Test Plan (VRD–105)

3.4.5 Procedures

a. TP–FTE–20008580	Functional Test Procedure, Electrical for the Communications Subsystem
b. TP–CPTE–20008580	Comprehensive Performance Test Procedure, Electrical for the Communications Subsystem
c. TP–AT–20008580	Aliveness Test Procedure for the Communications Subsystem

3.4.6 Software Documentation

All Computer Software Configuration Items (CSCIs) shall be documented as specified in the Software Management Plan, 20008655.

3.4.7 Operations Documentation

All operational requirements and constraints shall be documented in Ground System Requirements Database, 20043119.

3.5 Logistics

3.5.1 Maintenance

The Communications subsystem shall be designed to require no maintenance other than that required during long periods of storage as specified in Section 3.2.8.1 herein.

3.5.2 Supply

The following components shall have flight qualified spares available during ground test activities:

a. S–band Transponder and Band Reject Filter

b. Antenna Controller and RF Electronics Module of HGA

The following components shall have Engineering Test Models available during ground test activities:

a. Master Oscillator

b. KSA Modulator

c. DAS Modulator (2 boards compatible with KSA modulator)

d. DAS Transmitter

e. DAS Upconverter

f. S–band Transponder and Band Reject Filter

3.6 Precedence

3.6.1 Precedence of Design Criteria

Communications subsystem design decisions shall be made to accommodate the following design criteria in the following order of precedence:

a. Safety

b. Performance

c. Reliability

d. Cost

3.6.2 Documentation Precedence

If conflicts arise between documents, the communications subsystem shall adhere to design requirements as stated in the document nearest the top of the following list of requirement documents. The General Interface Specification (GIS) is applicable to the communications subsystem design only as invoked herein and is therefore not included in the following list:

a. Requirements Document (RD) for the EOS–AM Spacecraft, Product Assurance Requirements (PAR), Spacecraft PAR or subcontractor, as appropriate.

b. Contract End Item (CEI) Specification

c. Communications Subsystem Specification

3.7 Major Component Characteristics

3.7.1 Allocations

The Communications subsystem components shall be designed to levels at or below the allocations shown in Table XIII.

Table XIII. Communications Subsystem Allocations

Components	Qty. per S/C	Envelope (L x W x H) (L x OD)	Mass (lbs) Total	$P_{consumed}$ (Watts) Total	Est. $P_{diss.}$ (Watts) Total
S–band Omni Antenna	2	5 H x 4.5 D	2.0	0.0	0.0
S–band Interface Unit	1	21 x 10.1 x 5	12.3	0.0	1.0
S–band Transponder	2	10 x 8 x 8	34.6	40.7	36.0
Band Reject Filter	2	6.1 x 1.8 x 2	1.4	0.0	0.1
KSA Modulator	2	11 x 9 x 7.5	44.7	18.2	16.5
Master Oscillator	2	4 x 8 x 6	11	0.0	16.0
S and Ku Band Cables	1	N/A	16.7	0.0	0.0
High Gain Antenna	1	N/A	225.0	156.2	138.0
X–band Earth Coverage Antenna	1	6.5 x 23 D	5.3	0.0	0.0
DAS SSPA	2	11.6 x 4.7 x 2.1	5.9	79.2	57.0
DAS Upconverter	2	3.5 x 3.5 x 1.2	2.2	0.0	1.0
DAS Modulator	2	11 x 9 x 7.5	44.7	54.1	49.2
DAS Filter Assembly	1	6 x 1.5 x 0.7	1.1	0.0	1.5
WG Switch	1	2.5 x 2.5 x 3.75	2.2	0.0	0.0
X–band Cables and Waveguide	1	N/A	9.4	0.0	0.0
Unallocated Margin			**31.5**	**1.6**	**0.0**
Total			**450.0**	**350.0**	**316.0**

3.7.2 Flight Hardware Component Characteristics

3.7.2.1 High Gain Antenna Assembly (HGAA)

3.7.2.1.1 Functional Requirements

The HGAA shall provide the major interface between the EOS Spacecraft and the TDRSS. The HGA shall perform the functions of TDRSS science return link transmission using the KSA service. The HGA shall also provide for command link reception and housekeeping telemetry transmission using the SSA and SMA services. In addition, the HGAA shall provide the upconversion for the Ku–band communication links from the 882.5529 MHz intermediate frequency (IF) to the transmit frequency of 15,003.4 MHz.

The HGAA function shall include a two axis gimbal with steering capability to meet the TDRSS contact availability requirements.

The HGAA shall respond to pointing commands from the C&DH subsystem to provide the open loop pointing capability (program track) and maintain the HGA boresight within the pointing error limits of PS20005396, Table XII.

In support of the science data link, the HGAA shall provide the function of upconverting, amplifying and radiating the modulated carrier on the TDRSS KSA return link. This return link shall be the primary science data link with EOS DIS. The polarization of the KSA return link shall be left–hand circular polarization (LHCP) or right–hand circular polarization (RHCP), selectable.

In support of the command reception and telemetry transmission functions, the HGAA shall provide RHCP and LHCP S–band feed.

3.7.2.1.2 Interface Requirements

a. The Power subsystem shall provide redundant power feeds from the 120 volt bus with the capability to deliver 165 watts to the HGAA.

b. The interface to the C&DH subsystem shall be via two MIL–STD–1553B Remote Terminal (RT) interfaces for command (including pointing commands) and telemetry functions.

c. Each KSA Modulator shall provide a 882.5529 MHz modulated intermediate frequency (IF) signal and a 1765.1 MHz local oscillator (LO) signal to the HGAA.

d. The S–band Interface Unit (SBIU) interface to the HGA shall be via two cables, one for LHCP and one for RHCP.

e. The HGA layout shall attach the reflector and subreflector so that they may be removed and reinstalled on the Spacecraft at any time before encapsulation in the launch vehicle payload fairing.

3.7.2.2 KSA Modulator

3.7.2.2.1 Functional Requirements

The KSA Modulator shall provide the coding and modulation functions required for the science data prior to the HGA upconversion and transmission functions. Data shall be received from the C&DH subsystem then differentially encoded, bit interleaved, convolutionally encoded, and QPSK modulated onto an IF frequency. The KSA modulator shall also include a pseudo–random bit stream generator to perform bit error rate testing. As shown in Table XIV the KSA Modulator shall operate in the following modes:

Table XIV. KSA Modulator Modes

Input Data Type and Max. Data Rate (Mbps)	Output Data Rate (Max. Allowable) (Mbps)		
	I	Q	Usage
150 (P/B or R/T)	75	75	Primary Science Data Downlink (Playback or real-time); I:Q=1:1
N/A	75	75	Pseudorandom Bit Stream; I:Q=1:1

3.7.2.2.2 Interface Requirements

a. Each KSA Modulator shall provide a 882.5529 MHz IF output and a 1765.1 MHz LO output to the HGA Assembly.

b. The interface to the power subsystem shall be via two 120 volt feeds (fused) with the capability of supplying 53.4 watts total to the modulator.

c. The Science Formatting Equipment (SFE) shall provide a single input channel to each KSA modulator with each input consisting of a clock and a 4-bit data line as specified in PS20008575. Each data bit shall be NRZ-L with differential ECL logic. Each clock signal shall be a square wave with differential ECL logic.

d. The Master Oscillator shall provide a 4 MHz clock signal reference to the KSA Modulator with an interface characteristic specified in PS20008591.

e. The command and telemetry interface requirements shall be as specified in Appendices I and II.

3.7.2.3 S-band Transponder

3.7.2.3.1 Functional Requirements

The S-band Transponder shall provide simultaneous transmission and reception of TDRSS SSA or SMA signals with the alternate capability of transmission and reception of STDN standard signals via DSN/GN/WTS.

In the TDRSS mode, the transponder shall provide the following functions:

a. Receive, despread. and demodulate the SSA and SMA Forward link command signals sent to the EOS Spacecraft, including the ranging channel.

b. Convolutionally encode, interleave (256 kbps only), modulate, and transmit SSA or SMA return link telemetry.

c. Provide for S-band two way turn-around ranging, as well as one way Doppler tracking functions compatible with the TDRSS.

d. Perform Doppler compensation and extraction on the TDRSS forward link based on C&DH input, and provide the measured Doppler data to the C&DH subsystem.

e. Detect the PN code epoch on the TDRSS forward link and time tag the event for Spacecraft clock calibration processing by the C&DH subsystem.

In the STDN mode the transponder shall provide the following functions:

a. Acquire and track a carrier transmitter from the DSN/GN/WTS.

b. Receive and demodulate the DSN/GN/WTS command uplink signals excluding the ranging channel.

c. Transmit a phase modulated carrier where the modulation consists of a composite data stream.

d. Provide one way doppler tracking functions.

3.7.2.3.2 Interface Requirements

a. The transponder shall accept two channels of downlink telemetry from each Command and Telemetry Interface Unit (CTIU) as specified in PS20008584. Interfaces are RS–422 compatible. Only one CTIU is expected to provide active signals to the S–band Transponders.

b. Each S–band Transponder shall provide uplink command data, clock, RF lock, Bit lock, and epoch to both CTIUs as specified in PS20008584. Interfaces are RS–422 compatible. The CTIUs accept active signals from both S–band Transponders.

c. Each Master Oscillator shall provide a 4 MHz sinewave reference to each Transponder with interface characteristics given in PS 20008591.

d. The S–band Transponder shall accept hardline commands from the GSE via the T–0 umbilical as specified in PS20008584.

e. The BDU serial command and telemetry interface requirements shall be as specified in Appendices I and II.

f. Each CTIU shall provide a Doppler Initiate signal to each S–band Transponder for Doppler measurement synchronization. Each S–band Transponder shall provide a Doppler Sample Mark to each CTIU to indicate the time at which the Doppler measurement was sampled. These interfaces are RS–422 compatible.

g. The S–band Transponders shall interface to the SBIU as illustrated in Figure 5.

3.7.2.4 Master Oscillator (MO)

3.7.2.4.1 Functional Requirements

The MO shall provide an ultrastable frequency reference for the DAS Modulator, KSA modulator, S–band Transponder, and the Command and Telemetry Interface Unit (CTIU).

3.7.2.4.2 Interface Requirements

a. Each Master Oscillator shall provide a 4 MHz sinewave reference to both S–band transponders with interface characteristics given in PS 20008591.

b. Each Master Oscillator shall provide a 4 MHz clock reference to one DAS Modulator, one KSA Modulator, and two CTIUs with interface characteristics given in PS20008591.

c. The command and telemetry interface requirements shall be as specified in Appendices I and II.

3.7.2.5 S–band Interface Unit (SBIU)

3.7.2.5.1 Functional Requirements

The SBIU shall provide the cross–strapping function to interconnect the two S–band omni antennas, the two polarizations of the HGA S–band feeds and the two S–band transponders.

3.7.2.5.1.1 Command Reception

The SBIU shall passively combine both of the Omni antennas and the HGA to allow command reception from any antenna by either transponder. There shall be no active components or switches in the receive path to the transponder.

3.7.2.5.1.2 Telemetry Transmission

The SBIU shall route RF signals between the two S–band Omni antennas, the HGA (RHCP or LHCP), and the two transponders. Either transponder shall be capable of being connected to any of the antennas.

3.7.2.5.2 Interface Requirements

a. The SBIU shall interface with the S–band transponders, HGA Assembly, and the S–band omni antennas as shown in Figure 5 and specified in PS20008586.

b. The command and telemetry interface requirements shall be as specified in Appendices I and II.

3.7.2.6 S–band Omni Antenna

3.7.2.6.1 Functional Requirements

The two S–band omni antennas shall be RHCP and shall provide coverage for TDRSS and DSN/GN/WTS command reception and telemetry transmission.

3.7.2.6.2 Interface Requirements

The S-band omni antennas shall interface with the SBIU as shown in Figure 5 and specified in PS20008586.

3.7.2.7 DAS Antenna

3.7.2.7.1 Functional Requirements

The DAS antenna shall provide earth coverage of DAS data to User Ground Stations.

The coverage pattern shall be shaped to provide an approximately constant power density on earth for a subtended angle about the Spacecraft earth pointing axis of ± 63.8 degrees.

3.7.2.7.2 Interface Requirements

The input to the DAS Antenna shall be a modulated RF signal from the DAS filter assembly at a center frequency of 8212.5 MHz.

3.7.2.8 DAS SSPA

3.7.2.8.1 Functional Requirements

The SSPA design shall provide a single output power capability for the different modes of DAS operation.

3.7.2.8.2 Interface Requirements

a. The DAS Upconverter shall provide a single RF input to the DAS SSPA at a center frequency of 8212.5 MHz.

b. The DAS SSPA shall provide a single RF output (14 watts EOL) at a center frequency of 8212.5 MHz to the DAS transfer switch.

c. The interface to the power subsystem shall be via two 120 volt feeds (fused) for each SSPA with the capability of supplying 60 watts to the SSPA through each feed. One 120 volt feed is used for generating the RF high power output signal. The second 120 volt feed is used to power the Waveguide Switch pulse stretcher circuit.

d. The DAS SSPA shall provide a switch driver signal to the Waveguide Switch to command the switch to the desired position. This signal will be activated when the BDU commands the SSPA through the standard BDU relay drive interface.

e. The command and telemetry interface requirements shall be as specified in Appendices I and II.

3.7.2.9 DAS Upconverter

3.7.2.9.1 Functional Requirements

The DAS Upconverter shall receive an IF and LO signal, each at 912.5 MHz, from the DAS Modulator. The upconverter shall translate the 912.5 MHz IF signal to 8212.5 MHz, and shall provide this RF signal to the DAS SSPA.

3.7.2.9.2 Interface Requirements

a. The DAS Upconverter shall receive a 912.5 MHz LO signal from the DAS Modulator.

b. The DAS Modulator shall provide a 912.5 MHz IF signal to the DAS Upconverter.

c. The DAS Upconverter shall provide a 8212.5 MHz RF signal to the DAS SSPA.

d. The DAS Upconverter shall receive a 5 volt power feed from the DAS SSPA. This feed shall be capable of supplying 1 watt (regulated) to the DAS Upconverter.

e. The command and telemetry interface requirements shall be as specified in Appendices I and II.

3.7.2.10 DAS Modulator

3.7.2.10.1 Functional Requirements

The DAS Modulator shall provide the coding and modulation functions required for the science data prior to the direct downlink upconversion and transmission functions. Data shall be received from the C&DH subsystem then differentially encoded, convolutionally encoded and QPSK modulated onto an intermediate frequency. The data shall be bit interleaved for the DP1 mode. The DAS modulator shall generate a LO signal at 912.5 MHz for the upconverter. The DAS modulator shall also include a pseudo–random bit stream generator to perform bit error rate testing. As shown in Table XV the DAS Modulator shall operate in the following modes. The duration of any interruption in DB service during transitions shall not exceed five seconds.

Table XV. DAS Modulator Modes

Input Data Type and Max. Data Rate (Mbps)		Output Data Rate (Max. Allowable) (Mbps)		
Channel 1	Channel 2	I	Q	Usage
DB 12.5	N/A	12.5	12.5	Real–time Direct Broadcast (DB) of Low–rate Science Data (Not simultaneous with DDL or DP) Same data on I & Q. 1:1 Q/I ratio
DB 12.5	N/A	12.5	12.5	Real–time Direct Broadcast (DB) of Low–rate Science Data (Not simultaneous with DDL or DP) Same data on I & Q. 4:1 Q/I ratio
DB 12.5	DDL 105	12.5	105	Real-Time Direct Downlink (DDL) of High-rate Science Data and DB (Not Simultaneous with DP) 1:1 I/Q ratio
N/A	DP1 150	75	75	Direct Playback (DP) for Backup Science Data Downlink (Not Simultaneous With DB or DDL) 1:1 I/Q ratio
DB 12.5	DP2 105	12.5	105	Direct Playback (DP) for Backup Science Data Downlink and DB (Not Simultaneous With DDL) 1:1 I/Q ratio
N/A	N/A	75	75	Pseudorandom Bit Stream

3.7.2.10.2 Interface Requirements

a. The DAS Modulator output to the DAS Upconverter shall be a modulated IF signal at a frequency of 912.5 MHz and an LO signal at 912.5 MHz.

b. The interface to the power subsystem shall be via two 120 volt feeds (fused) with the capability of supplying 54.1 watts total to the modulator.

c. The Science Formatting Equipment (SFE) shall provide two input channels to each DAS modulator with each input consisting of a clock and a 4–bit data line as specified in PS20008575. Each data bit shall be NRZ–L with differential ECL logic. Each clock signal shall be a square wave with differential ECL logic.

d. The Master Oscillator shall provide a 4 MHz clock signal reference to the DAS Modulator with an interface characteristic specified in PS20008591.

e. The command and telemetry interface requirements shall be as specified in Appendices I and II.

4 QUALITY ASSURANCE PROVISIONS

The requirements for the formal verification of the performance, design, and construction of the communications subsystem shall be as specified in this section. These requirements define the extent to which the communications subsystem must demonstrate capability to meet the design and performance requirements specified in this document.

The COMMS design shall be reviewed in support of the Spacecraft Flight Assurance Review Program defined in the PAIP, Section 2, Assurance Review Requirements. The basis for the COMMS verification program implementation is the Spacecraft Verification Plan, PN20005404, the Spacecraft Verification Specification, PS20005404, and the Spacecraft Comprehensive Test Plan, PN20008664. The COMMS verification program includes an engineering development effort designed to validate the appropriateness of the hardware design approach. Development includes the building and testing of component breadboards and Engineering Test Models (ETM) of selected designs to verify circuit development, function evaluation, stability studies and interface performance. Development will not constitute verification, although data from development tests will be used to support verification activities.

Breadboards for the COMMS will provide the basis for interface verification, stability and transient analysis, failure modes and redundancy functionality and design verification. ETMs will be used to confirm packaging and manufacturing concepts while environmental exposure will be used to confirm worst case performance capabilities.

4.1 Communications Subsystem Verification

Verification of each requirement shall be performed as defined in the Verification Matrix, Attachment A, of this specification (provided under separate cover).

4.1.1 Verification Phases

Phases shall be either Acceptance or Qualification as defined in PS20005404.

4.1.2 Verification Methods

The following methods shall be used as specified in the verification matrix to verify each of the requirements in Section 3: Demonstration, Test, Analysis, and/or Inspection. Each method shall be as defined in PS20005404.

4.2 Testing

4.2.1 Acceptance Testing

Acceptance testing shall be performed on all flight components to verify workmanship and functionality. The acceptance test levels are defined in PS20005404, Section 4.

4.2.2 Qualification testing

Qualification testing of Qualification Test Model (QTM) components shall be used to demonstrate adequacy of design limits. The qualification test levels are defined in PS20005404, Figures 1 and 2.

4.2.3 Protoflight Testing

Protoflight test hardware shall be used for qualification testing and shall be identical in configuration and production processing to flight hardware. Protoflight tests, where specified, shall consist of qualification level exposure of the first flight article for acceptance level durations (time and/or cycles).

4.2.4 Installation Testing And Checkout

Installation testing and checkout such as continuity, interface mating, support equipment compatibility, and documentation verification shall be done in accordance with the GIS, IS20008501, and the Comprehensive Test Plan, PN20008664.

4.2.5 Test Equipment Verification

Unless otherwise specified herein, instruments and test equipment used to measure communications subsystem performance characteristics shall be in accordance with the verification plan, PN20005404.

4.2.6 Verification Conditions

Ambient test conditions shall be per Table V of the EOS Verification Specification, PS20005404. Test tolerances shall be per Table VI of PS20005404.

4.3 Verification Documentation

The subsystem verification activities shall be documented in:

a. Verification Reports as defined in PS20005404

b. Test procedures

c. Test logs

d. Test Review Board meeting minutes

4.3.1 Responsibility for Verification

Astro Space shall verify each requirement specified in this document.

5 PREPARATION FOR DELIVERY

The COMMS equipment shall be handled, packaged, and transported in accordance with the requirements given in Astro Space PAIP, 20005397, Section 8.21.

(This page intentionally left blank.)

6 NOTES

6.1 Definitions

6.2 Acronyms and Abbreviations

BER	Bit Error Rate
bps	bits per second
BSR	Bit Slippage Rate
C&DHS	Command and Data Handling Subsystem
CEI	Contract End Item
COMMS	Communications Subsystem
CTIU	Command/Telemetry Interface Unit
DAS	Direct Access System
DB	Direct Broadcast
DDL	Direct Downlink
DP	Direct Playback
DSN	Deep Space Network
ECL	Emitter Coupled Logic
EIRP	Effective Isotropic–Radiated Power
EMC	Electromagnetic Compatibility
EMI	Electromagnetic Interference
EOL	End–of–Life
FDIR	Fault Detection, Isolation, and Recovery
GIS	General Interface Specification
GN	Ground Network
GN&C	Guidance, Navigation, and Control
GSE	Ground Support Equipment
HGA	High Gain Antenna
Hz	Hertz
ICD	Interface Control Document
kbps	kilobits per second
KSA	Ku–band Single Access

kHz	Kilohertz
LHCP	Left Hand Circular Polarization
LO	Local Oscillator
Mbps	Megabits per second
MHz	Megahertz
NA	Not Applicable
NASA	National Aeronautics and Space Administration
P_s	Probability of Success
QPSK	Quadrature Phase Shift Keying
RF	Radio Frequency
RFI	Radio Frequency Interference
RHCP	Right Hand Circular Polarization
RT	Remote Terminal
SBIU	S–band Interface Unit
SBT	S–band Transponder
SFE	Science Formatting Equipment
SMA	S–band Multiple Access
SSA	S–band Single Access
TBR	To Be Reviewed
TDRSS	Tracking and Data Relay Satellite System
TONS	TDRSS Onboard Navigation System
UQPSK	Unbalanced Quadrature Phase Shift Keying
USCCS	User Spacecraft Clock Calibration System
WTS	Wallops Tracking Station

6.3 Exceptions to the GIS and GIIS

Not applicable.

6.4 Requirements Traceability

Communication requirements in the COMMS flow from the CEI specification, PS20005396. The COMMS Requirement Traceability Matrix is shown in Attachment B (provided under separate cover).

APPENDIX I

10 COMMUNICATION SUBSYSTEM COMMAND LIST

The Communications Subsystem command lists are provided in the following paragraphs for each of the subsystem assemblies. The command signal types available are serial (S), relay drive (RD), and logic–level pulse (LLP).

10.1 S–band Transponder Command List (1)

The S–band Transponder interfaces with the COMM/C&DH Bus Data Unit (BDU) through two serial interfaces. Commands are executed through one interface while telemetry is collected using both interfaces.

Function Name	Signal Type	Operation
Receiver Frequency Control Word (FCW)	S	Offsets the Receiver Center Frequency
Transmitter Frequency Control Word (FCW)	S	Offsets the Transmitter Center Frequency
Command Rate (2)	S	Selects Command Rate (0.125, 1, 10 kbps)
PN Code	S	Selects the PN Code to be used in TDRSS Mode
Frequency Channel	S	Selects the Frequency Channel for operation
Tx Power ON	S	Turns Transmitter power ON
Tx Power OFF	S	Turns Transmitter power OFF
Tx Auto ON Allow	S	Transmitter Turns ON when receiver locks
Tx Auto ON Inhibit	S	Transmitter will not Turn ON when receiver locks
Select Int. Osc.	S	Selects internal TCXO as frequency reference
Select Ex. Osc. A	S	Selects external MO A as frequency reference
Select Ex. Osc. B	S	Selects external MO B as frequency reference
Tx Auto Coherent Allow	S	Transmitter automatically set to coherent mode when receiver locks
Tx Auto Coherent Inhibit	S	Transmitter not automatically set to coherent mode when receiver locks
Tx Format Select	S	Selects Transmitter Format; STDN or TDRSS
TDRSS Tx Mode	S	Selects TDRSS Transmit Mode F, G, or H
STDN Tx Mode	S	Selects STDN Transmit Mode A, B, or C
Tx I/Q Power Ratio	S	Selects TDRSS Link I/Q Power Ratio

Function Name	Signal Type	Operation
I–Channel Conv. Enable	S	Enables I–Channel Convolutional Encoder
I–Channel Conv. Disable	S	Disables I–Channel Convolutional Encoder
Q–Channel Conv. Enable	S	Enables Q–Channel Convolutional Encoder
Q–Channel Conv. Disable	S	Disables Q–Channel Convolutional Encoder
Q–Channel Inter. Enable	S	Enables Q–Channel Interleaver
Q–Channel Inter. Disable	S	Disables Q–Channel Interleaver
A1/A2 Telemetry Select	S	Selects source of A telemetry input as A1 or A2
B1/B2 Telemetry Select	S	Selects source of B telemetry input as B1 or B2
A Telemetry Enable	S	Enables A Telemetry input
A Telemetry Disable	S	Disables A Telemetry input
B Telemetry Enable	S	Enables B Telemetry input
B Telemetry Disable	S	Disables B Telemetry input
Transponder Reset	S	Resets the Transponder
I–Channel PN Enable	S	Enables I–Channel PN Code
I–Channel PN Disable	S	Disables I–Channel PN Code
Q–Channel PN Enable	S	Enables Q–Channel PN Code
Q–Channel PN Disable	S	Disables Q–Channel PN Code

Notes:

(1) There are two transponder units and therefore two sets of commands and command interfaces. Each serial command reserves one bit to specify the transponder being addressed.

(2) Command rates are 0.125, 1, 10 kbps for TDRSS, 2kbps for STDN. Command rate at power up will be 125 bps.

10.2 S–band Interface Unit (SBIU) Command List

The SBIU interfaces with COMM/C&DH BDU. The routing of Transponders A and B is implemented using four coaxial switches, SW1 through SW4.

Function Name	Signal Type	Operation
SW1 TO POS A	RD	Select Zenith Omni
SW1 TO POS B	RD	Select Nadir Omni
SW2 TO POS A	RD	Select LHCP for HGA
SW2 TO POS B	RD	Select RHCP for HGA
SW3 TO POS A	RD	Select HGA for TX1
SW3 TO POS B	RD	Select Omni for TX1
SW4 TO POS A	RD	Select HGA for TX2
SW4 TO POS B	RD	Select Omni for TX2

10.3 KSA Modulator Command List (1)

The KSA modulators interface with the Recorder Equipment Module buss Data Unit (BDU) and Science Formatting Equipment (SFE), both are parts of C&DHS.

Function Name	Signal Type	Operation
KSA Mode Select	S	Selects Mode 1 or PN (Test)
Mod. EPC–1 ON	RD	Turns Modulator EPC–1 Power ON
Mod. EPC–1 OFF	RD	Turns Modulator EPC–1 Power OFF
Mod. EPC–2 ON	RD	Turns Modulator EPC–2 Power ON
Mod. EPC–2 OFF	RD	Turns Modulator EPC–2 Power OFF
PN Transmit ON (2)	S	Enables PN Generator
PN Transmit OFF (2)	S	Disables PN Generator
Standby	S	Places Modulator on Standby (from On–line)
On-line	S	Places Modulator On–line (from Standby)
Mod. Reset	S	Resets Modulator Circuits

Notes: (1) Revised in April 1993: there are only two KSA modes —PN mode and mode 1; Science Data (mode 1; play–back or real–time)) has input to Channel 1 only.

(2) There are two KSA Modulator units and therefore two sets of commands and command interfaces.

(3) Only used when PN (Test) mode is selected.

10.4 DAS Modulator Command List (1)

The DAS Modulators interface with the Recorder BDU.

Function Name	Signal Type	Operation
Data Mode	S	Modes 1, 2, 3, or PN (Test)
QPSK Bal.	S	Selects the Balanced QPSK output
QPSK Unbal.	S	Selects the Unbalanced QPSK output
Mod. EPC–1 ON	RD	Turns Modulator EPC–1 Power ON
Mod. EPC–1 OFF	RD	Turns Modulator EPC–1 Power OFF
Mod. EPC–2 ON	RD	Turns Modulator EPC–2 Power ON
Mod. EPC–2 OFF	RD	Turns Modulator EPC–2 Power OFF
PN Transmit ON (2)	S	Enables PN Generator
PN Transmit OFF (2)	S	Disables PN Generator
Mod. Reset	S	Resets Modulator Circuits

Notes:

(1) There are two DAS Modulator units and therefore two sets of commands and command interfaces.

(2) Only used when PN (Test) mode is selected.

10.5 DAS SSPA Command List (1)

The DAS SSPA's interface with the DAS panel BDU.

Function Name	Signal Type	Operation
SSPA ON	RD	Turns SSPA power ON
SSPA OFF	RD	Turns SSPA power OFF
WG Switch in POS. A	RD	Waveguide Switch selects SSPA A
WG Switch in POS. B	RD	Waveguide Switch selects SSPA B

Notes:

(1) There are two DAS SSPA's and therefore two sets of commands and command interfaces.

10.6 Master Oscillator Command List (1)

The Master Oscillators interface with the COMM/C&DH BDU.

Function Name	Signal Type	Operation
Oscillator Power ON	RD	Turns Oscillator ON
Oscillator Power OFF	RD	Turns Oscillator OFF
Frequency Adjust	S	Adjusts the Oscillator Frequency

Notes:

(1) There are two Master Oscillators and therefore two sets of commands and command interfaces.

10.7 High Gain Antenna Assembly (HGAA) Command List

The HGAA command and telemetry are interfaced (and only interfaced) with the C&DH via MIL–STD–1553B buses (primary and redundant) .

Function Name	Signal Type	Operation
Alternate Acon ON	S	Turn Logic Board EPC ON
Alternate Acon OFF	S	Turn Logic Board EPC OFF
TWTA–A Power ON	S	Turn 28 V Power ON TO TWTA–A
TWTA–A Power OFF	S	Turn 28 V Power OFF TO TWTA–A
TWTA–B Power ON	S	Turn 28 V Power ON TO TWTA–B
TWTA–B Power OFF	S	Turn 28 V Power OFF TO TWTA–B
TWTA–A High voltage ON	S	Turn TWTA–A High voltage ON
TWTA–A High voltage OFF	S	Turn TWTA–A High voltage OFF
TWTA–B High voltage ON	S	Turn TWTA–B High voltage ON
TWTA–B High voltage OFF	S	Turn TWTA–B High voltage OFF
UC–A Power ON	S	Turn 28 V Power to UC–A ON
UC–A Power OFF	S	Turn 28 V Power to UC–A OFF
UC–B Power ON	S	Turn 28 V Power to UC–B ON
UC–B Power OFF	S	Turn 28 V Power to UC–B OFF
MDA–A Power ON	S	Turn 28 V Power to MDA–A ON
MDA–A Power OFF	S	Turn 28 V Power to MDA–A OFF
MDA–B Power ON	S	Turn 28 V Power to MDA–B ON
MDA–B Power OFF	S	Turn 28 V Power to MDA–B OFF

Function Name	Signal Type	Operation
Lock AZ Gimbal	S	Turn 28 V Power ON to AZ Lock Mechanism
Lock EL Gimbal	S	Turn 28 V Power ON to EL Lock Mechanism
Unlock AZ Gimbal	S	Turn 28 V Power OFF to AZ Lock Mechanism
Unlock EL Gimbal	S	Turn 28 V Power OFF to EL Lock Mechanism
IF Switch to Position #1	S	Set IF SW to Position #1
LO Switch to Position #1	S	Set LO SW to Position #1
TX Switch to Position #1	S	Set TX SW to Position #1
POLAR #1 Switch to Position #1	S	Set Polarization #1 to Position #1
POLAR #2 Switch to Position #1	S	Set Polarization #2 to Position #1
IF Switch to Position #2	S	Set IF SW to Position #2
LO Switch to Position #2	S	Set LO SW to Position #2
TX Switch to Position #2	S	Set TX SW to Position #2
POLAR #1 Switch to Position #2	S	Set Polarization #1 to Position #2
POLAR #2 Switch to Position #2	S	Set Polarization #2 to Position #2
AZ Direction & STEP	S	Rotate HGA in Specified AZ direction
EL Direction & STEP	S	Rotate HGA in Specified EL direction
ACON–A RESET	S	Manual Power on RESET
ACON–B RESET	S	Manual Power on RESET

APPENDIX II

20 COMMUNICATION SUBSYSTEM TELEMETRY REQUIREMENTS

20.1 Telemetry Table Header Definition

The table header below will be used for all component telemetry summaries. An explanation of each column heading is provided for clarity.

Telemetry Point	Units	Type	Bits	Description

Col Heading	Definition
Telemetry Point	Description of the telemetry data contents
Units	The number of components having the same telemetry data
Type	Active Analog (AA), Passive Analog (PA), Active Digital Discrete (AD), Passive Digital Discrete (PD), Serial (S)
Bits	The number of bits needed to represent the data
Description	Telemetry content definition.

20.2 S–Band Transponder Telemetry List

The two S–Band transponders interface with the COMM/C&DH BDU. Each transponder provides two 128 bit frames of serial telemetry (Frame A shown below, Frame B shown on the following page). These frames are accessed with separate telemetry sync control lines (thereby requiring two BDU serial interfaces) but are read out from the same telemetry data port. The receiver status and received signal strength are considered critical performance telemetry.

Frame A Telemetry Point	Units	Type	Bits	Description
Receiver Processing State	2	S	4	Present receiver signal processing state
PN Lock Status	2	S	1	Lock status of the pn code tracking loop
Subcarrier Lock Status	2	S	1	Lock status of the subcarrier tracking loop
TDRSS/STDN Mode Status	2	S	1	Indicates STDN signal is being tracked
Doppler Initiator Selected	2	S	1	Doppler Initiate Interface A or B selected
Carrier Lock Status	2	S	1	Lock status of the RF carrier (TDRSS/STDN)
Detector Lock Status	2	S	1	Lock status of the bit synchronizer
Long Code Sync Status	2	S	1	Lock status of the long code tracking code
Cycle Slip Detected	2	S	1	Carrier tracking loop cycle slip indicator
Slow Squelch Status	2	S	1	Indicates SNR is ~2 dB below threshold
CW Detect	2	S	1	Indicates CW (STDN) signal was detected
Transponder Address	2	S	1	Programmed transponder address
Command Data Rate	2	S	3	Present receiver uplink data rate
Digital AGC	2	S	13	Present digital automatic gain control value
Wideband AGC	2	S	8	Receiver IF automatic gain control value
Selected PN Code	2	S	7	Present pn code for TDRSS mode
Receiver Frequency	2	S	32	Receiver carrier NCO frequency control word
Frame A Identifier	2	S	1	Identifies Frame A data (always set to 0)
Rec. Offset Freq. Word	2	S	13	Present receiver frequency offset control word
MO/TCXO Select	2	S	1	MO or TCXO selected as frequency reference
MO A/B Selected	2	S	1	MO A or B selected as frequency reference
Transmit Offset Freq. Word	2	S	13	Present transmit frequency offset control word
Rec. 1st LO Static Phase Error	2	S	8	Static phase error of the 1st receiver LO
Xmit 2nd LO Static Phase Error	2	S	8	Static phase error of the 2nd transmitter LO

Frame B Telemetry Point	Units	Type	Bits	Description
Doppler Frequency Sum	2	S	64	Uplink Doppler frequency sum measurement
Chan 2 Telem Status	2	S	1	Channel 2 downlink telemetry enabled/disabled
Chan 2 Telem Input Selected	2	S	1	Channel 2 downlink telemetry prime/redundant
Chan 1 Telem Status	2	S	1	Channel 1 downlink telemetry enabled/disabled
Chan 1 Telem Input Selected	2	S	1	Channel 1 downlink telemetry prime/redundant
Chan 2 Encoder Status	2	S	1	Channel 2 convolut. encoder enabled/disabled
Chan 1 Encoder Status	2	S	1	Channel 1 convolut. encoder enabled/disabled
Q PN Code Status	2	S	1	Channel 2 pn code enabled/disabled
I PN Code Status	2	S	1	Channel 1 pn code enabled/disabled
Transmit Auto–Coh. Status	2	S	1	Transmitter auto–coherency enabled/disabled
Transmit Auto–On Status	2	S	1	Transmitter auto–on enabled/disabled
Transmitter Mode Status	2	S	3	Present transmitter mode (A, B. C, F, G, or H)
Q Channel Interleaver Status	2	S	1	Channel 2 interleaver enabled/disabled
Transmitter Coherency Status	2	S	1	Coherent mode (mode 1) enabled/disabled
Transmitter Power Status	2	S	1	Transmitter powered on/off
Receiver Current	2	S	8	Receiver power converter input current
Frame B Identifier	2	S	1	Identifies Frame B data (always set to 1)
Q/I Power Ratio	2	S	2	Q/I (Channel 2/Channel 1) power ratio
Transmitter Current	2	S	8	Transmitter power converter input current
Forward RF Power	2	S	8	Transmitter RF power output level
Oscillator Temperature	2	S	8	Internal TCXO temperature
Power Amplifier Temperature	2	S	8	Transmitter power amplifier temperature

20.3 S–Band Interface Unit Telemetry List

The SBIU interfaces with the COMM/C&DH BDU. The SBIU consists of RF switches. Standard status monitoring only is required.

Telemetry Point	Units	Type	Bits	Description
Transmitter 1 Antenna Select	1	PD	1	Position of transmitter 1 OMNI or HGA RF switch
Transmitter 2 Antenna Select	1	PD	1	Position of transmitter 2 OMNI or HGA RF switch
HGA Transmit Polarization Select	1	PD	1	Position of HGA RHCP or LHCP RF switch
Omni Antenna Select	1	PD	1	Nadir or Zenith OMNI RF switch

20.4 Ku–band Single Access (KSA) Modulator Telemetry List

The KSA modulators interface with the Tape Recorder Equipment Module Bus Data Unit (Recorder EM BDU), a part of the C&DH.

Telemetry Point	Units	Type	Bits	Description
EPC 1 Power Status	2	PD	1	On/Off status of EPC 1
EPC 2 Power Status	2	PD	1	On/Off status of EPC 2
EPC 1 Input Current	2	AA	8	Input current draw of EPC1
EPC 2 Input Current	2	AA	8	Input current draw of EPC2
Oscillator Temperature	2	PA	8	Temperature of IF/LO Oscillator
Modulator Mode (1 or PN)	2	S	1	Data or Pseudorandom code mode
Input Clock Switch	2	S	1	Master Oscillator or data clock
IF Carrier Phase Lock	2	S	1	Lock or unlock status
150 MHz PLL Status	2	S	1	Data clock Lock or unlock status
On–Line/Standby Status	2	S	1	Modulator science of standby mode
EPC 1 Fail Status	2	S	1	Over/under voltage status
EPC 2 Fail Status	2	S	1	Over/under voltage status

20.5 DAS Modulator Telemetry List

The DAS modulator interfaces with the DAS panel BDU.

Telemetry Point	Units	Type	Bits	Description
EPC 1 Power Status	2	PD	1	On/Off status of EPC1
EPC 2 Power Status	2	PD	1	On/Off status of EPC2
EPC 1 Input Current	2	AA	8	Input current draw of EPC1
EPC 2 Input Current	2	AA	8	Input current draw of EPC2
EPC 1 Voltage	2	AA	8	EPC1 output voltage
EPC 2 Voltage	2	AA	8	EPC2 output voltage
Oscillator Temperature	2	PA	8	Temperature of IF/LO Oscillator
Modulator Output Switch	2	S	1	Modulator power ratio (4:1 or 1:1 Q:I ratio)
Modulator Mode (1,2,3 or PN)	2	S	2	Modulator data mode
Input Clock Switch	2	S	1	Master Oscillator or data clock
IF Carrier Phase Lock	2	S	1	Frequency source PLL lock or unlock status
150 MHz PLL Status	2	S	1	Data clock lock or unlock status
210 MHz PLL Status	2	S	1	Data clock lock or unlock status
EPC 1 Fail Status	2	S	1	Over/under voltage status
EPC 2 Fail Status	2	S	1	Over/under voltage status

20.6 DAS Waveguide Switch Telemetry List

The DAS LO Cross–strap Switch interfaces with the DAS panel BDU. This switch cross–straps the two DAS Modulator IF outputs with the two DAS Upconverter IF inputs. Standard status monitoring only is required.

Telemetry Point	Units	Type	Bits	Description
Switch Position Status	1	PD	1	DAS waveguide switch position

20.7 DAS SSPA Telemetry List

The DAS transmitters interface with the DAS BDU. Standard status monitoring only is required.

Telemetry Point	Units	Type	Bits	Description
SSPA Status (On/Off)	2	PD	1	Power Status
Bus Current	2	AA	8	EPC bus current
Baseplate Temperature	2	PA	8	Power amplifier temperature

20.8 Master Oscillator (MO) Telemetry List

The MOs interface with the COMM/C&DH BDU. Standard status monitoring only is required.

Telemetry Point	Units	Type	Bits	Description
Oscillator Temperature 1	2	PA	8	Location 1 temperature
Oscillator Temperature 2	2	PA	8	Location 2 temperature
Power Status (On/Off)	2	PD	2	Power relay status

20.9 High Gain Antenna Telemetry List

Standard status monitoring only is required. The HGA interfaces with its own remote terminal on the C&T bus.

Telemetry Point	Units	Type	Bits	Description
STATUS AND FLAGS				
Switch Position – IF	1	PD	1	IF cross–strap switch status
Switch Position – LO	1	PD	1	LO cross–strap switch status
Switch Position – TX	1	PD	1	TWTA output select switch status
Switch Position –Polarization	2	PD	1	Polarization select switch status
TWTA High voltage ON/OFF	2	PD	1	TWTA high voltage status
TWTA 28 V ON/OFF	2	PD	1	TWTA low voltage status
UC ON/OFF	2	PD	1	UC configuration status
MDA ON/OFF	2	PD	1	MDA configuration status
AZ Gimbal Lock/Unlock	1	PD	1	AZ Gimbal lock status
EL Gimbal Lock/Unlock	1	PD	1	EL Gimbal lock status

Telemetry Point	Units	Type	Bits	Description
Encoder Reference Line	2	PD	1	Encoder configuration status
AZ Motor Windings Select/deselect	1	PD	1	AZ motor winding status
EL Motor Windings Select/deselect	1	PD	1	EL motor winding status
ACON ON/OFF	2	PD	1	ACON configuration status
ANALOG/DIGITAL DATA				
+5 V	2	AA	8	Logic EPC critical health
+12 V	2	AA	8	Logic EPC critical health
–12 V	2	AA	8	Logic EPC critical health
28 V (Buck Converter)	2	AA	8	Buck converter critical health
UC Secondary Voltage	2	AA	8	UC critical health
MDA Assembly Bite	2	S	16	MDA components and output status
TWTA Forward Power Level	2	AA	8	TWTA critical health
TWTA Reflected Power Level	2	AA	8	TWTA critical health
TWTA Anode Voltage	2	AA	8	TWTA critical health
TWTA Helix Current	2	AA	8	TWTA critical health
AZ Position Encoder	2	S	16	AZ absolute position data
EL Position Encoder	2	S	16	EL absolute position data
TEMPERATURE SENSORS				
TWTA	2	PA	8	TWTA temperature
ACON	2	PA	8	ACON temperature
UC	2	PA	8	UC temperature
MDA	2	PA	8	MDA temperature
AZ Gimbal	1	PA	8	Gimbal AZ winding temperature
EL Gimbal	1	PA	8	Gimbal EL winding temperature
S–Band Feed	1	PA	8	S–band feed safety
Ku–Band Feed	1	PA	8	Ku–band feed safety

PS20004749
CAGE No. 49671
28 June 1993

Performance Specification
Electrical Power Subsystem
EOS–AM Spacecraft
(SP–501)

Prepared under:
Contract NAS5–32500
NASA Goddard Space Flight Center
Greenbelt, Maryland 20771

Prepared by:
Martin Marietta Corporation
Astro Space
P.O. Box 800
Princeton, New Jersey 08543–0800

DCC062693

(This page intentionally left blank.)

REVISION LOG

This log identifies those portions of this document which have been revised since the original issue. Revised portions of each page, for the current revision only, are identified by marginal striping.

Revision	Paragraph Number(s) Affected	Rev. Date	Approval
Initial Issue		06/28/93	CM/GSR

(This page intentionally left blank.)

TABLE OF CONTENTS

SECTION / PARAGRAPH	TITLE	PAGE
1	SCOPE	1
1.1	Identification	1
2	APPLICABLE DOCUMENTS	3
2.1	Government Documents	3
2.1.1	NASA Documents	3
2.1.2	Military Documents	3
2.1.3	Other Government Documents	3
2.2	Non–Government Documents	4
2.2.1	Martin Marietta Astro Space Documents	4
2.2.2	Subcontractor Documents	5
2.2.3	Other Non–Government Documents	5
3	REQUIREMENTS	7
3.1	EPS Definition	7
3.1.1	Item Diagrams	7
3.1.2	Interface Definition	7
3.1.2.1	Functional Interfaces	10
3.1.2.2	Physical Interfaces	10
3.1.2.3	Thermal Interfaces	21
3.1.3	Major Component List	21
3.2	Characteristics	22
3.2.1	Performance	22
3.2.1.1	Solar Array	22
3.2.1.2	Energy Storage	22
3.2.1.3	EPS Primary Functions	22
3.2.1.4	Power	23
3.2.1.5	Main Bus Characteristics	24
3.2.1.6	28 V Regulated Secondary Power	27
3.2.1.7	Pyrotechnic Device Power	27

TABLE OF CONTENTS (Continued)

SECTION / PARAGRAPH	TITLE	PAGE
3.2.1.8	Power Management and Distribution	27
3.2.1.9	Operational Life	27
3.2.1.10	Launch Vehicle Compatibility	27
3.2.1.11	Sensor Power and Conditioning	28
3.2.1.12	Grounding	28
3.2.1.13	Command and Telemetry Support	28
3.2.2	Operational Modes	30
3.2.2.1	Ground Power	30
3.2.2.2	Normal Operation Mode	30
3.2.2.3	Safe Mode	31
3.2.3	Physical Characteristics	31
3.2.3.1	Mass	31
3.2.3.2	Durability	31
3.2.3.3	Layout and Dimensions	32
3.2.3.4	Maintainability Impact on Design	32
3.2.3.5	Handling Features	32
3.2.4	Power Characteristics	32
3.2.5	Power Usage	32
3.2.5.1	Power Exclusion Rules	33
3.2.6	Reliability	33
3.2.6.1	Storage Restrictions	33
3.2.6.2	Vulnerability Factors	33
3.2.6.3	Failure Tolerance	33
3.2.6.4	Failure Propagation Restrictions	33
3.2.7	Environmental Conditions	34
3.2.7.1	Storage, Integration, and Test	34
3.2.7.2	Shipment	34
3.2.7.3	Launch	34
3.2.7.4	On–orbit	35
3.2.7.5	Electromagnetic Radiation	35

TABLE OF CONTENTS (Continued)

SECTION / PARAGRAPH	TITLE	PAGE
3.3	Design and Construction	35
3.3.1	Material, Processes, Parts, and Finishes	35
3.3.2	Nameplates and Product Marking	35
3.3.3	Workmanship	35
3.3.4	Interchangeability	36
3.3.5	Safety	36
3.3.5.1	General	36
3.3.5.2	Automatic Hazard Detection and Safing	36
3.3.5.3	Safety Interlock Mechanisms/Techniques	36
3.3.5.4	Liquids and Gasses	36
3.3.5.5	Pressurized Vessels	36
3.4	Documentation	36
3.4.1	Specifications	36
3.4.2	Drawings	37
3.4.3	Technical Manuals	37
3.4.4	Test plans	37
3.4.5	Procedures	37
3.4.6	Installation Instructions	37
3.4.7	Software Documentation	37
3.5	Logistics	37
3.5.1	Maintenance	37
3.5.2	Supply	37
3.6	Precedence	38
3.6.1	Precedence of Design Criteria	38
3.6.2	Documentation Precedence	38
3.7	Major Component Characteristics	38
3.7.1	Allocations	38
3.7.2	Solar Array Assembly Characteristics	39
3.7.2.1	Function	39
3.7.2.2	Electrical	40

TABLE OF CONTENTS (Continued)

SECTION / PARAGRAPH	TITLE	PAGE
3.7.2.3	Mechanical	40
3.7.3	Battery Assembly Characteristics	40
3.7.3.1	Function	40
3.7.3.2	Electrical	41
3.7.3.3	Mechanical	41
3.7.4	Battery Power Conditioner Characteristics	42
3.7.4.1	Function	42
3.7.4.2	Electrical	42
3.7.4.3	Redundancy	43
3.7.4.4	Fault Operation	43
3.7.5	Sequential Shunt Unit Characteristics	44
3.7.5.1	Function	44
3.7.5.2	Electrical	44
3.7.5.3	Redundancy	45
3.7.6	Power Distribution Unit Characteristics	45
3.7.6.1	Function	45
3.7.6.2	Electrical	46
3.7.7	Fuse and Distribution Box Assembly Characteristics	50
3.7.7.1	Function	50
3.7.7.2	Electrical	50
3.7.8	Array Drive Electronics (ADE) Characteristics	51
3.7.8.1	Function	51
3.7.8.2	Electrical	51
3.7.8.3	Redundancy	51
3.7.9	Flight Software Characteristics	51
4	QUALITY ASSURANCE PROVISIONS	53
4.1	EPS Verification	53
4.1.1	Verification Phases	53
4.1.2	Verification Methods	55

TABLE OF CONTENTS (Continued)

SECTION / PARAGRAPH	TITLE	PAGE
4.1.3	Responsibility for Verification	55
4.1.4	Verification Conditions	55
4.2	Testing	55
4.2.1	Reliability Testing	55
4.2.2	Engineering Evaluation and Test Requirements	55
4.2.2.1	Test Flows	55
4.2.2.2	Performance Tests	56
4.2.2.3	Verification Tests	56
4.2.3	Acceptance Testing	58
4.2.4	Qualification Testing	58
4.2.5	Installation Testing, and Checkout	58
4.3	Special EPS Verifications	58
4.4	Test Equipment	58
4.4.1	Test Equipment Safety Features	59
4.4.2	Test Equipment Verification	59
4.4.3	Test Equipment Calibration	59
4.5	Verification Documentation	59
5	PREPARATION FOR DELIVERY	61
6	NOTES	63
6.1	Definitions	63
6.2	Acronyms and Abbreviations	63
6.3	Exceptions to the GIS and GIIS	66
6.4	Requirements Traceability Matrix	66
	APPENDIX I	
10	EPS COMMAND LIST	67
	APPENDIX II	
20	EPS TELEMETRY LIST	71

LIST OF FIGURES

FIGURE	TITLE	PAGE
1	Simplified Block Diagram of EPS	8
2	Functional Flow Diagram	9
3	External Power Interfaces	11
4	SAA and SSU Interfaces	13
5	ADE Interfaces	14
6	PDU Interfaces	15
7	Battery Interfaces	17
8	BPC Interfaces	18
9	Fuse and Distribution Board and Electrical Power Conditioner Interfaces	19
10	EPS/BDU Interface	20
11	Bus Voltage Regulation Profile	24
12	EPS Prime Power Ripple Limits	25
13	Impedance at User Interface	26
14	Typical Component Verification Flow	56
15	EPS Overall Verification Flow Diagram	57

LIST OF TABLES

TABLE	TITLE	PAGE
I	Major Components	21
II	EPS Component Telemetry Bandwidth Allocations	28
III	EPS Component Command Allocations	29
IV	Subsystem Operational Modes	30
V	Power Resource Allocation (Watts)	32
VI	EPS Component Allocations	39
VII	Battery Charge Rates	47
VIII	EPS Development Plan	54

TBR LOG

ITEM	SECTION	PAGE	SUBJECT	RESP.	DUE
TBR–1	3.2.1.5.1.1	24	Voltage regulation set point	Pwr Systems	CDR
TBR–2	3.7.4.4	44	BPC channel over–temperature shut–down limit	Pwr Systems	CDR

1 SCOPE

1.1 Identification

This specification establishes the performance, design, development, and test requirements for the Electrical Power Subsystem (EPS). The EPS provides all necessary electrical power to operate all Spacecraft instruments and subsystems at all times during the mission in accordance with the requirements of the Contract End Item (CEI) Specification for the EOS–AM Spacecraft, PS20005396 (SEP–101), throughout its design life.

(This page intentionally left blank.)

2 APPLICABLE DOCUMENTS

2.1 Government Documents

The following documents of the exact issue shown, form a part of this specification to the extent specified herein. In the event of conflict between the documents referenced below and the contents of this specification, the contents of this specification shall take precedence, except as defined in Section 3.6 herein.

2.1.1 NASA Documents

GSFC–420–03–02 15 April 1992	General Instrument Interface Specification
GSFC–422–09–05	Unique Instrument Interface Document for the Advanced Spaceborne Thermal Emission and Reflection Radiometer (ASTER)
GSFC–422–21–05	Unique Instrument Interface Document for the Moderate–Resolution Imaging Spectrometer (MODIS)
GSFC–422–32–05	Unique Instrument Interface Document for the Clouds and the Earth's Radiant Energy System (CERES)
GSFC–422–38–05	Unique Instrument Interface Document for the Multi–Angle Imaging Spectro–Radiometer (MISR)
GSFC–422–41–05	Unique Instrument Interface Document for the Measurement of Pollution in the Troposphere (MOPITT)

2.1.2 Military Documents

MIL–STD–1522A	Standard General Requirements for Safe Design and Operation of Pressurized Missile and Space Systems
MIL–STD–1553B	1553 Serial Data Bus Requirements
MIL–B–5087B	Bonding, Electrical and Lightning Protection

2.1.3 Other Government Documents

WSMCR 127–1 December 1989	Western Space and Missile Center Range Safety Specification

2.2 Non–Government Documents

The following documents of the latest issue shown form a part of this specification to the extent specified herein. In the event of conflict between the documents referenced herein and the contents of this specification, the contents of this specification shall be considered a superseding requirement, except for higher tier documents.

2.2.1 Martin Marietta Astro Space Documents

NHB5300.4	Workmanship Specification
PS20005396	EOS–AM Spacecraft Contract End Item Specification, (SEP–101)
PS20005397 1/17/92	Product Assurance Implementation Plan (PAIP)
PS20005404	Verification Specification for the Earth Observing System, (VRD–110)
PN20005404 4/3/93	Platform Verification Plan
PS20008536 5/14/92	EOS–A Spacecraft Specification Tree
PN20005868 8/14/90	Electromagnetic Compatibility Test Plan
PN20005869	Electromagnetic Compatibility (EMC) Control Plan, (SEP–106)
IS20008501	General Interface Specification for the Earth Observing System, (ICD–101)
IS20008502 9/4/92	General Instrument Interface Specification for the Earth Observing System, (UID–101)
IS20008503 5/15/92	Launch Vehicle Interface Requirements Document (ICD–103)
PS20008514	Critical Item Development Specification for Solar Array Assembly (SP–871)
PS20008596 1/14/92	Battery Power Conditioner (BPC) Performance Specification
PS20008597 1/19/93	Electrical Power Conditioner (EPC) Performance Specification (SP–502)
PS20008599 12/7/92	Power Distribution Unit (PDU) Performance Specification (SP–502)
PS20008602 12/21/92	Array Drive Electronics (ADE) Performance Specification (SP–502)

PS20008604 6/12/92	Sequential Shunt Unit (SSU) Performance Specification (SP–502)
PS20008606 1/19/93	Solar Array Drive Critical Item Development Specification (SP–501)
20008607	Ground Rules and Assumptions for Failure Modes and Effects Analysis (FMEA) (PA–500)
20008608	Ground Rules and Assumptions for Reliability Assessment (PA–515)
20008648	Program Approved Parts List (PAPL) (PA–325)
20008650	Program Approved Materials and Processes List (PAMPL) (PA–460)
20008662	EOS–AM Spacecraft Flight Software System Requirements Specification (SD–1109)
PN20008664 9/30/92	Spacecraft and Subsystem Test Plan (VRD–105a)
PS20008694 8/31/92	Fuse and Distribution Box (FDB) Performance Specification (SP–502)
PS20008746 12/23/92	Hex Bay Battery Panel Performance Specification
PS20008882 12/23/92	Power Module Battery Panel Performance Specification
Source:	Martin Marietta Astro Space P. O. Box 800 Princeton, NJ 08543–0800

2.2.2 Subcontractor Documents

PS20008514	Solar Array Assembly Design Package
20008593P1P4	Eagle–Picher Battery Cell Drawing Package
20008593P5P8	Gates Battery Cell Drawing Package
Source:	Martin Marietta Astro Space P. O. Box 800 Princeton, NJ 08543–0800

2.2.3 Other Non–Government Documents

None

(This page intentionally left blank.)

3 REQUIREMENTS

The EPS shall meet all performance requirements specified herein.

3.1 EPS Definition

The EPS provides the functions of energy generation, energy storage, power conversion, control, regulation, and power source and harness protection for the EOS Spacecraft. The EPS provides all Spacecraft instruments and subsystem housekeeping equipment with +120 Volts dc (Vdc) power during all mission phases. A simplified block diagram of the EPS is shown in Figure 1. The EPS shall be designed such that no single failure prevents meeting the mission requirements.

The EPS utilizes a fully–regulated direct–energy–transfer (DET) configuration operating at +120 ±4% Vdc to transfer power directly from the source to the loads with a minimum of losses and without any intermediate power conversion, providing regulated power for all housekeeping and instrument loads. Conversion, when required from +120 Vdc to +28 Vdc at the loads, is provided by electrical power conditioners (EPCs) near the point of the load in the subsystem modules.

A single–wing photovoltaic solar array, with Gallium Arsenide cells, converts incident solar energy to electrical energy to operate the loads and to recharge two 50–ampere–hour NiH_2 batteries. There are two battery power conditioners (BPCs), one for each battery. The BPC combines discharge regulation and charge regulation functions into a multichannel, internally redundant converter. During the 35–minute (nominal) eclipse phase, the batteries provide power to operate the Spacecraft loads. During the 64–minute (nominal) sun phase of the orbit, the BPCs charge the batteries. The BPC is commanded to specific charge rate by either the spacecraft controls computer (SCC) or ground, via the bus data unit (BDU). Battery overcharge protection is provided by closed–loop battery voltage/temperature control.

The bus voltage is regulated by the SSU and BPCs via a control voltage generated by the mode controller located within the Power Distribution Unit (PDU).

The Spacecraft main bus is a star–radial power distribution system at +120 Vdc implemented via a double–insulated central distribution point in the PDU and supplying loads via fused feeds. The central power point as well as all unfused paths connected to it are double–insulated from box chassis and Spacecraft ground to eliminate single–point insulation failures.

3.1.1 Item Diagrams

Figure 2 shows a functional block diagram of the EPS.

3.1.2 Interface Definition

The mechanical and electrical interfaces that must exist between the major components of the EPS and other Spacecraft power users are defined in their component performance specifications.

The EPS design shall comply with the requirements of the Launch Vehicle Interface Requirements Document (IS20008503).

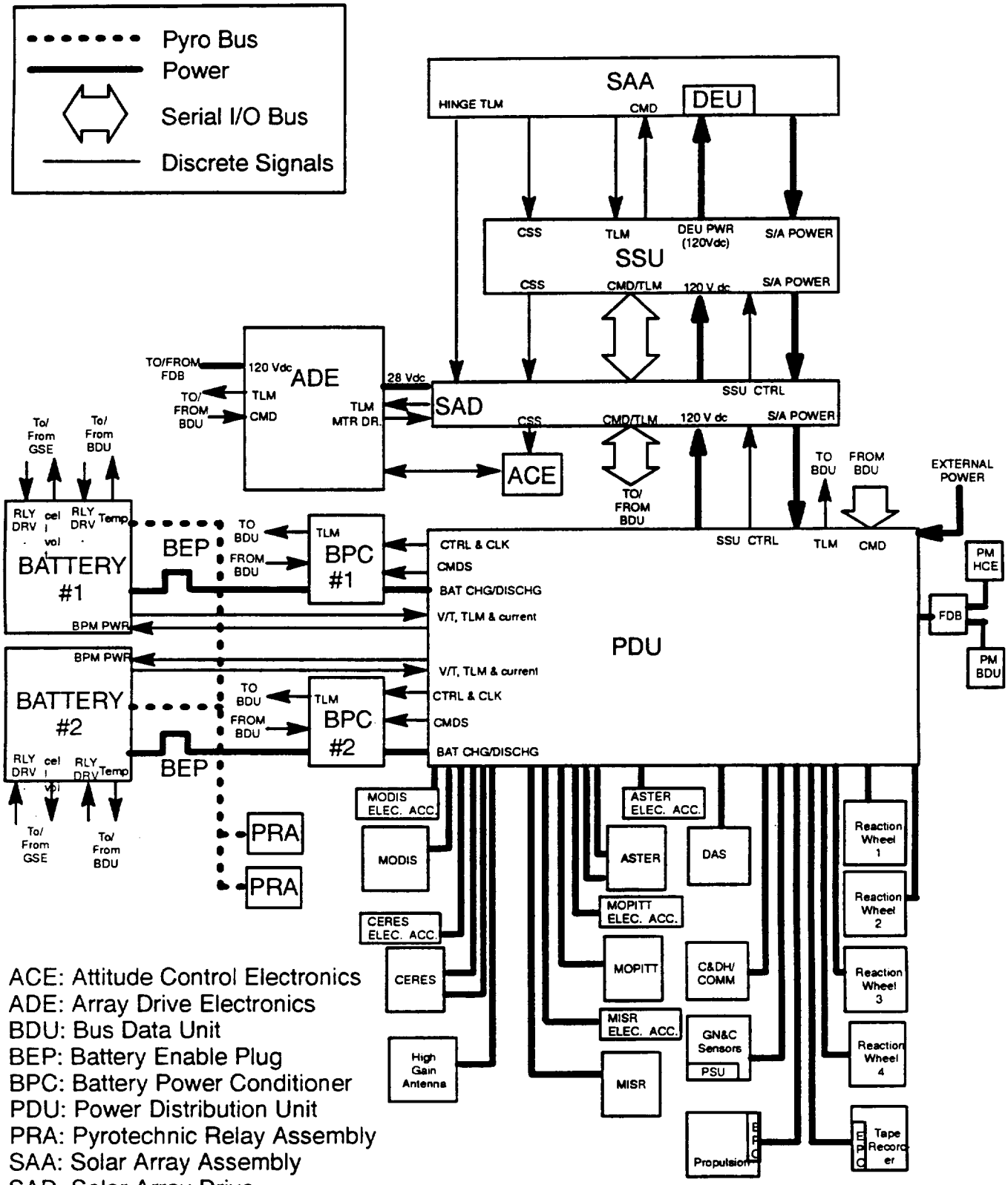

Figure 1. Simplified Block Diagram of EPS

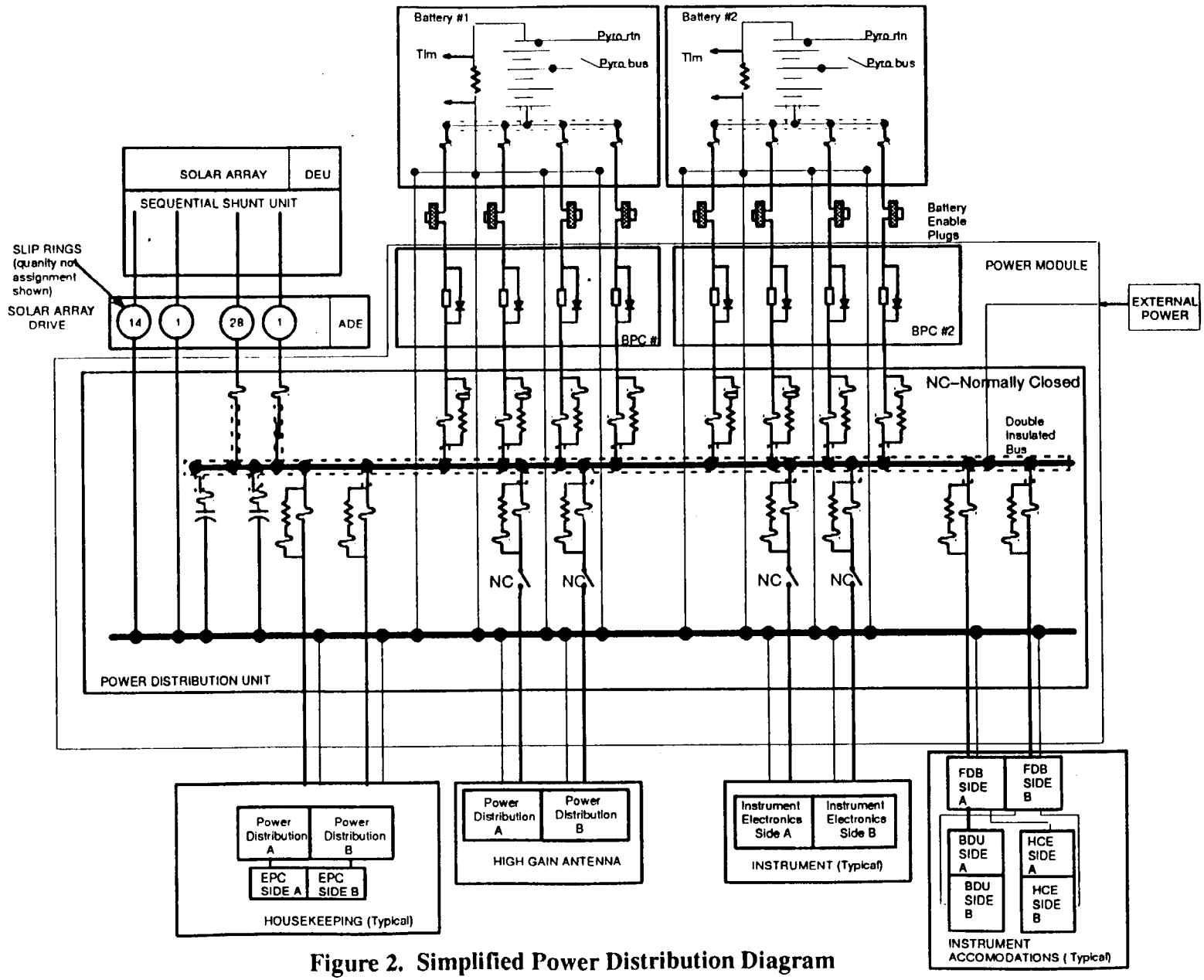

Figure 2. Simplified Power Distribution Diagram

DCC062693

PS20004749
28 June 1993

EPS components mounted on instrument support structure shall comply with the General Instrument Interface Specification (GIIS), 420–03–02, and the Unique Instrument Interface Documents (UIIDs) for interface requirements.

3.1.2.1 Functional Interfaces

Similar functional interfaces shall be standardized.

3.1.2.1.1 Software Interfaces

The Power Monitoring and Control Software (PMCS) portion of the EOS flight software shall be responsible for the health and safety of the EPS. The PMCS shall reside in the Spacecraft Controls Computer. The interface between the SCC and the EPS will utilize the command and telemetry functions of the C&DH subsystem.

3.1.2.2 Physical Interfaces

Similar physical interfaces shall be standardized.

3.1.2.2.1 External Power Interfaces

The EPS shall have external power interfaces to support Spacecraft integration and test (I&T) and prelaunch flight preparation following Spacecraft–to–launch–vehicle integration. The EPS shall be able to use external power to start–up the EPS, charge batteries independent of the EPS and safely connect batteries to the EPS. External power interfaces are illustrated in Figure 3.

External power sources will provide full protection such that interface requirements of this specification are not exceeded during normal or abnormal EPS operation. Current limiting and overvoltage protection will be provided. EPS parameters essential for monitoring normal operation will be provided and used by the interfacing Ground Support Equipment (GSE) to determine EPS performance and to prevent externally induced EPS damage.

3.1.2.2.1.1 Solar Array Electrical Simulator Interface

The EPS shall interface with the Solar Array Electrical Simulator (SAES), which will simulate each of the solar cell circuits that make up the solar array. Simulation will include circuit level current–voltage (I–V) functional relationship, capacitance, impedance and load transient responses. Each shunt circuit in the Sequential Shunt Unit (SSU) shall interface with a simulated circuit in the SAES. The SSU shall accept the EPS full rated load at 127 Vdc from the SAES. The SSU shall accept simulated Solar Array Assembly (SAA) telemetry from the SAES. The SAES will accept 120 Vdc DEU power and commands from the SSU

3.1.2.2.1.2 External Power Source Interface

The EPS external power source interface shall accept power for housekeeping (Spacecraft subsystem) loads and instrument loads. The external power source shall be such that the voltage at the Power Distribution Unit's (PDU) primary power distribution point is 120 +4, –2% Vdc with a maximum power of 2,530 kW.

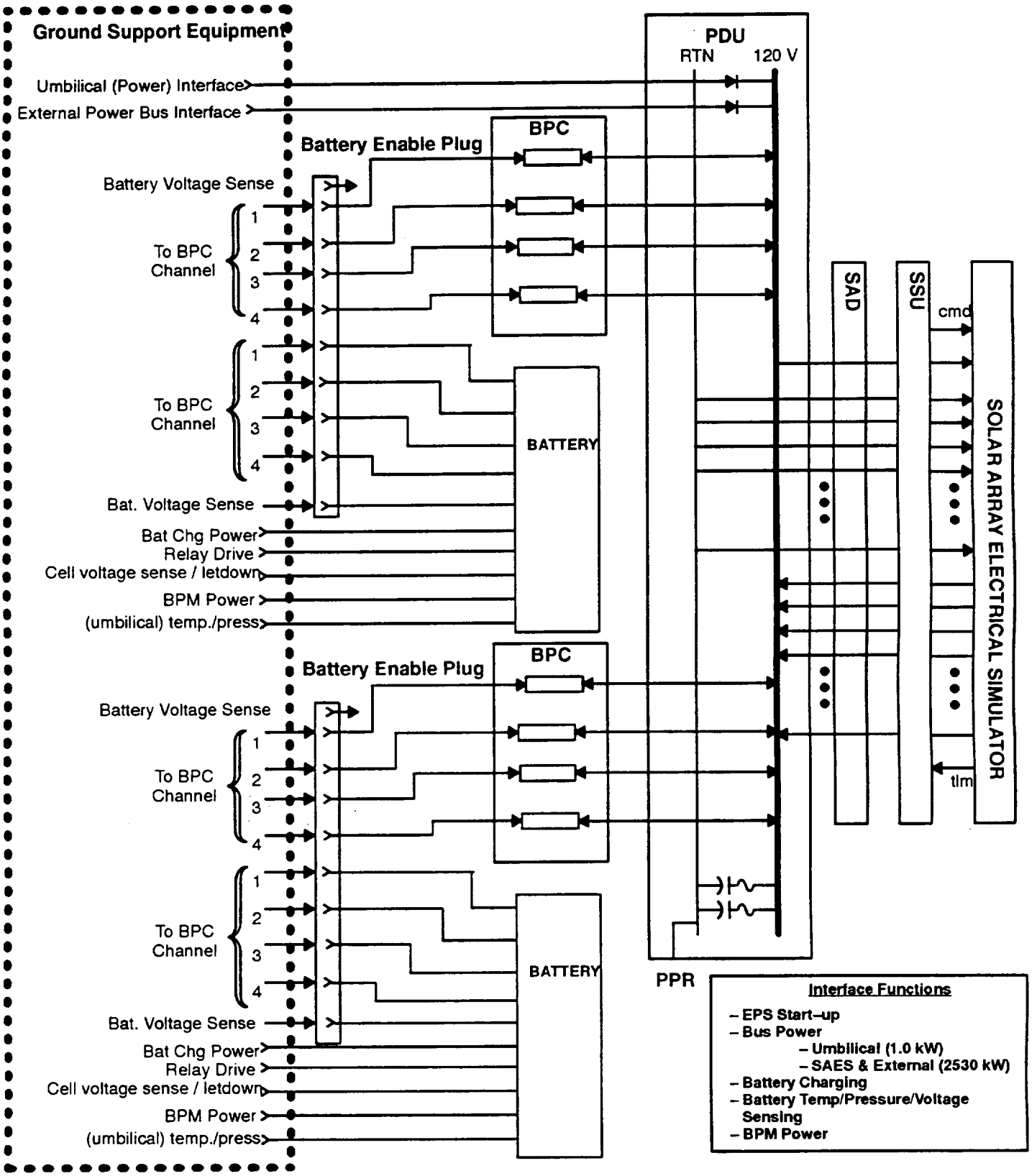

Figure 3. External Power Interfaces

3.1.2.2.1.3 External Battery Charge Interface

Each battery panel shall have the capability of being charged independently as shown in Figure 3. The EPS shall accept external battery charging during integration and test as well as pre–launch activity, while the Spacecraft is integrated with the launch vehicle and prior to battery enable plug installation. The EPS shall accept charge rates from C/10 (5.0 Amps) to the trickle charge rate of C/90 (0.55 Amps). Battery charge management parameters, including battery and cell voltages, current, temperature and pressure (as a function of time) will be monitored and recorded during all external charging. The EPS shall be able to power and monitor Battery Pressure Monitors (BPMs) through the GSE and the Spacecraft. The external BPM power supply shall not interfere with the EPS BPM power supply if the EPS should be separately powered.

3.1.2.2.1.4 EPS Start–up

The EPS shall be capable of being started using a "soft start" procedure where a voltage is applied to the power bus beginning at zero (0.0 Vdc). Voltage increments not exceeding 5.0 Vdc (2.0 Vdc at 45 Vdc – 60Vdc) will be used to bring the power bus to 120 Vdc. The solar array electrical simulator (SAES) will be the primary power bus power source. Secondary ports, such as the external power bus interface (3.1.2.1.1.2) or the umbilical interface (3.1.2.1.1.5), may be used for EPS start–up.

3.1.2.2.1.5 Umbilical Interface

The umbilical interface will contain all the functions required in Sections 3.1.2.2.1.2 through 3.1.2.2.1.4. The EPS shall receive external umbilical power at voltages of 0 to 120 Vdc, with maximum power of 1kW at 120 V, and maximum current of 20 A at 50 V. The umbilical interface will provide Spacecraft load power plus battery maintenance charge power in the pre–launch mission phase.

3.1.2.2.1.6 Battery Enable Plug

A battery enable plug (BEP), part of the electrical accommodations subsystem (EAS), will be used to connect each battery to each channel of its dedicated BPC. A pre–enable plug, containing explosion proof relays and surge current resistors, will be utilized prior to battery enable plug (BEP) installation to make the initial connection. The pre–enable plug shall be used to equalize the battery and bus voltages prior to installing the BEP. After installation of the battery enable plug, the pre–enable plug will be removed and replaced with a connector cap capable of meeting all mission requirements. Each BEP will contain power connections as well as battery voltage sense connections. The Battery Enable Relay Box (BERB), supplied by I&T, shall have latching relays to protect against power failures.

3.1.2.2.2 Pyro Bus Interfaces

The EPS shall provide redundant unfused Pyro buses directly from the batteries, using a voltage tap at the 22nd cell. A pyro bus enable relay shall be located on each battery panel.

3.1.2.2.3 Solar Array Assembly Interfaces

The Solar Array Assembly (SAA) electrical interfaces shall be as shown in Figure 4.

3.1.2.2.4 Sequential Shunt Unit Interfaces

The Sequential Shunt Unit (SSU) electrical interfaces shall be as shown in Figure 4.

3.1.2.2.5 Array Drive Electronics Interfaces

The Array Drive Electronics (ADE) electrical interfaces shall be as shown in Figure 5.

3.1.2.2.6 Power Distribution Unit Interfaces

The Power Distribution Unit (PDU) electrical interfaces shall be as shown in Figure 6.

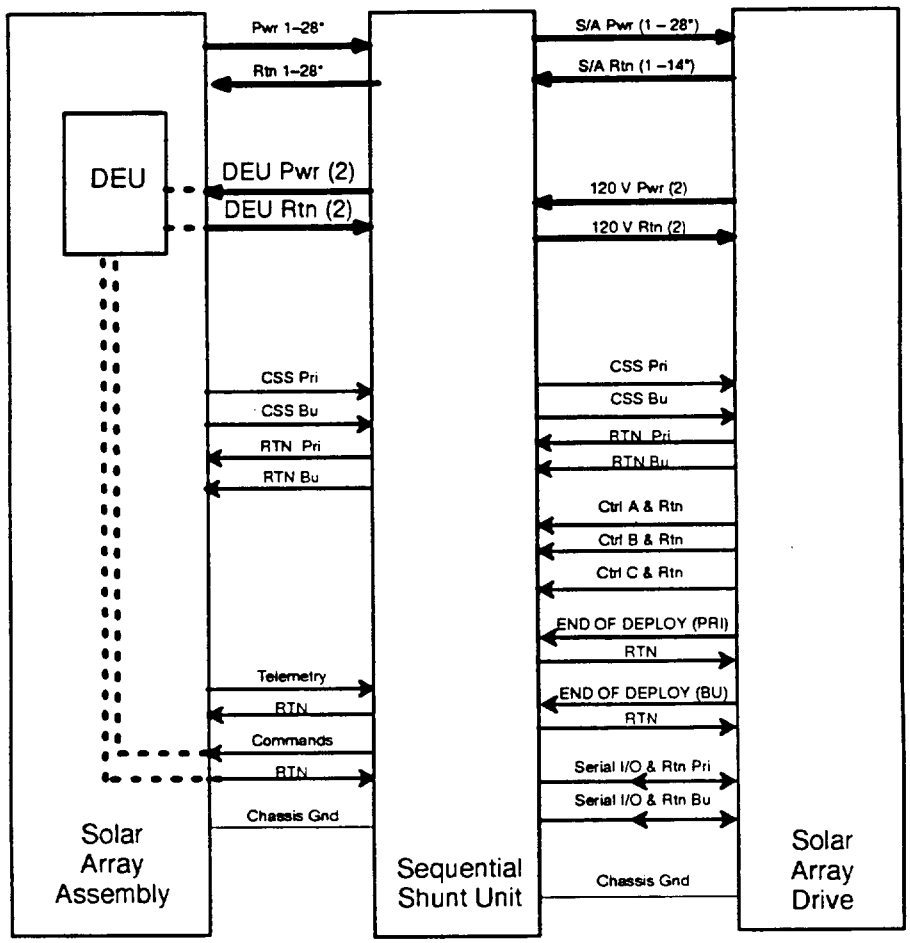

*maximum capability

Figure 4. SAA and SSU Interfaces

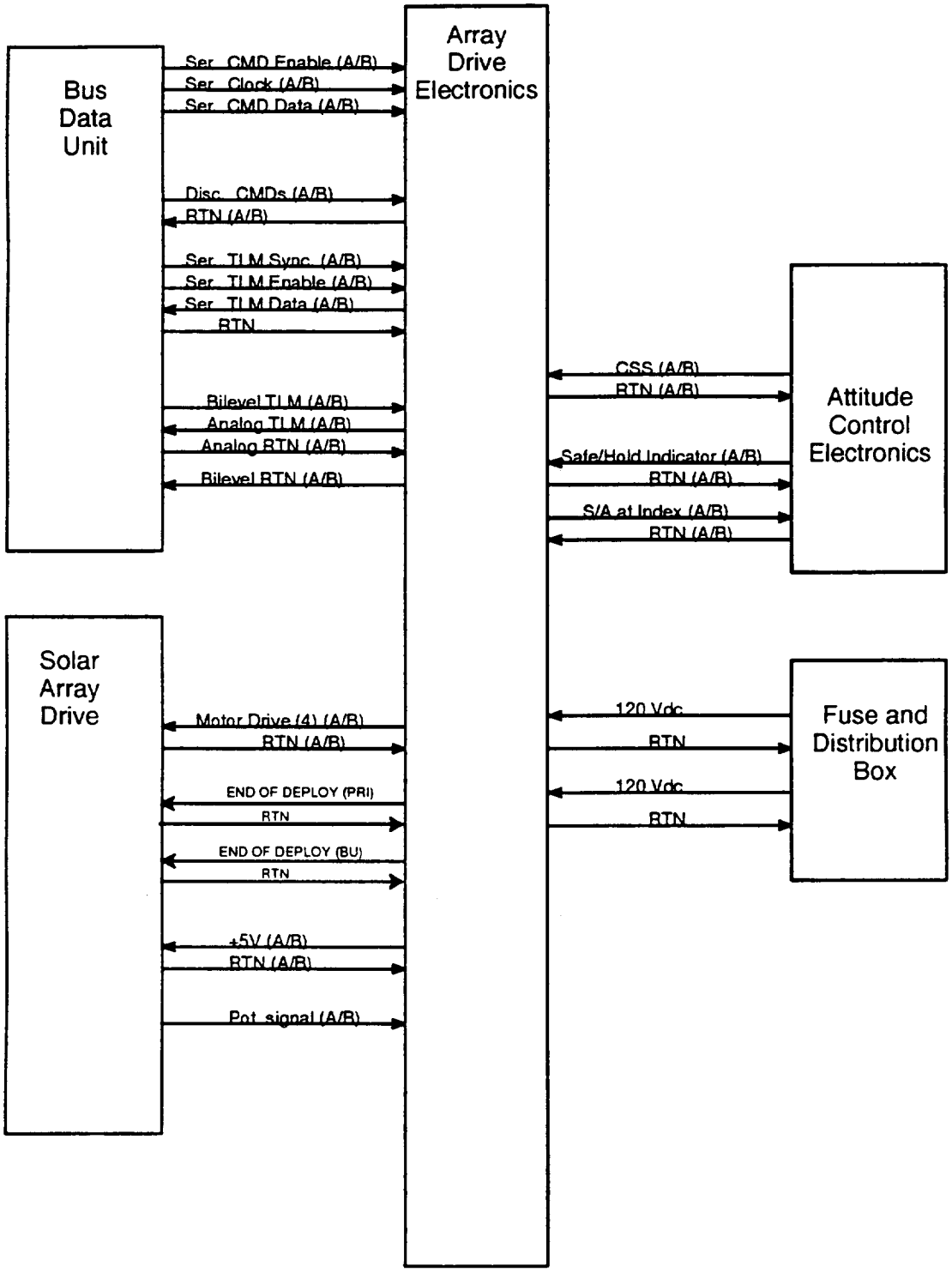

Figure 5. ADE Interfaces

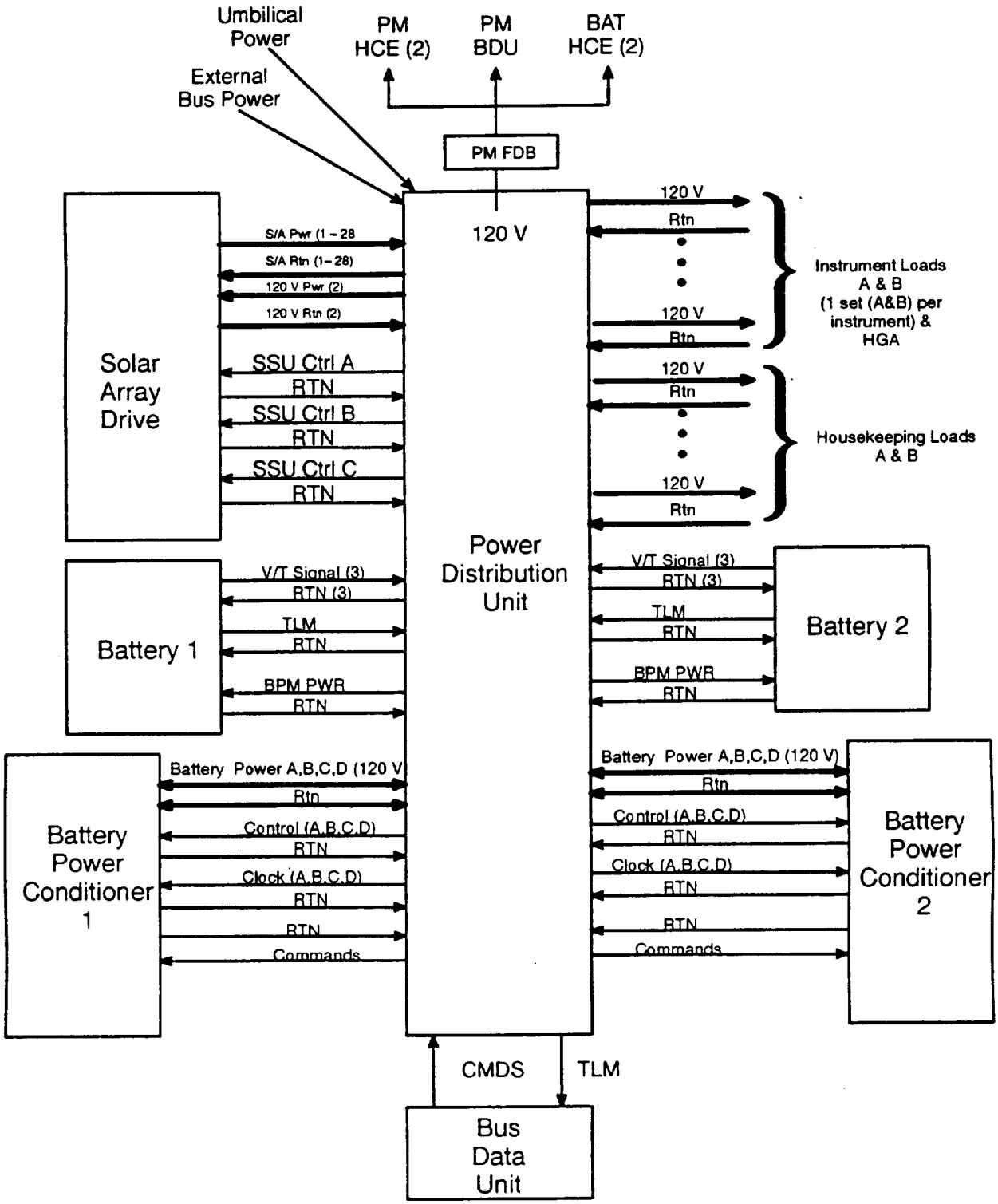

Figure 6. PDU Interfaces

3.1.2.2.7 Battery Assembly Interfaces

The Battery Assembly (BAT1/BAT2) electrical interfaces shall be as shown in Figure 7.

3.1.2.2.8 Battery Power Conditioner Interfaces

The Battery Power Conditioner (BPC) electrical interfaces shall be as shown in Figure 8.

3.1.2.2.9 Fuse and Distribution Board Interfaces

The electrical interfaces for the Fuse and Distribution Board (FDB) shall be as shown in Figure 9.

3.1.2.2.10 Communication and Command and Data Handling Interfaces

The EPS shall provide 120 Vdc primary power to the communication and command and data handling (C&DH) equipment module via two redundantly fused feeds from separate PDU connectors. Distribution of +120 Vdc power locally shall be via an FDB assembly within the module, which shall provide fused power to each component. An FDB shall be located in the COMM/C&DH, Recorder, and Direct Access System (DAS) Equipment modules

The C&DH will provide bus data units (BDU) for local control and monitoring of power equipment, as shown in Figure 10.

3.1.2.2.11 Guidance Navigation and Control Interfaces

The EPS shall provide 120 Vdc primary power to the Guidance, Navigation and Control (GN&C) equipment module, and 120 Vdc power to the reaction wheel assembly (RWA) equipment module, each via two redundantly fused feeds from separate PDU connectors. Subsidiary fusing in the local FDB shall be utilized to provide overcurrent protection.

Secondary, +28 Vdc, regulated power shall be provided within the GN&C sensor module by the power switching unit (PSU).

3.1.2.2.12 Propulsion Interfaces

The EPS shall provide 120 Vdc primary power to the propulsion system (PROP) equipment via two redundantly fused feeds from separate PDU connectors.

Secondary, +28 Vdc regulated power shall be provided within the propulsion module.

3.1.2.2.13 High Gain Antenna Interfaces

The EPS shall provide 120 Vdc primary power to the High Gain Antenna (HGA) via two redundantly fused, switched feeds from separate PDU connectors.

3.1.2.2.14 Instrument Interfaces

The EPS shall provide 120 Vdc primary power to each instrument via two redundantly fused, switched feeds from separate PDU connectors. The CERES and ASTER instruments shall be provided with two sets of primary power feeds. The EPS shall comply with the requirements of each instrument's Unique Instrument Interface Document (UIID). Primary and backup power feed current for each instrument shall be provided via PDU telemetry.

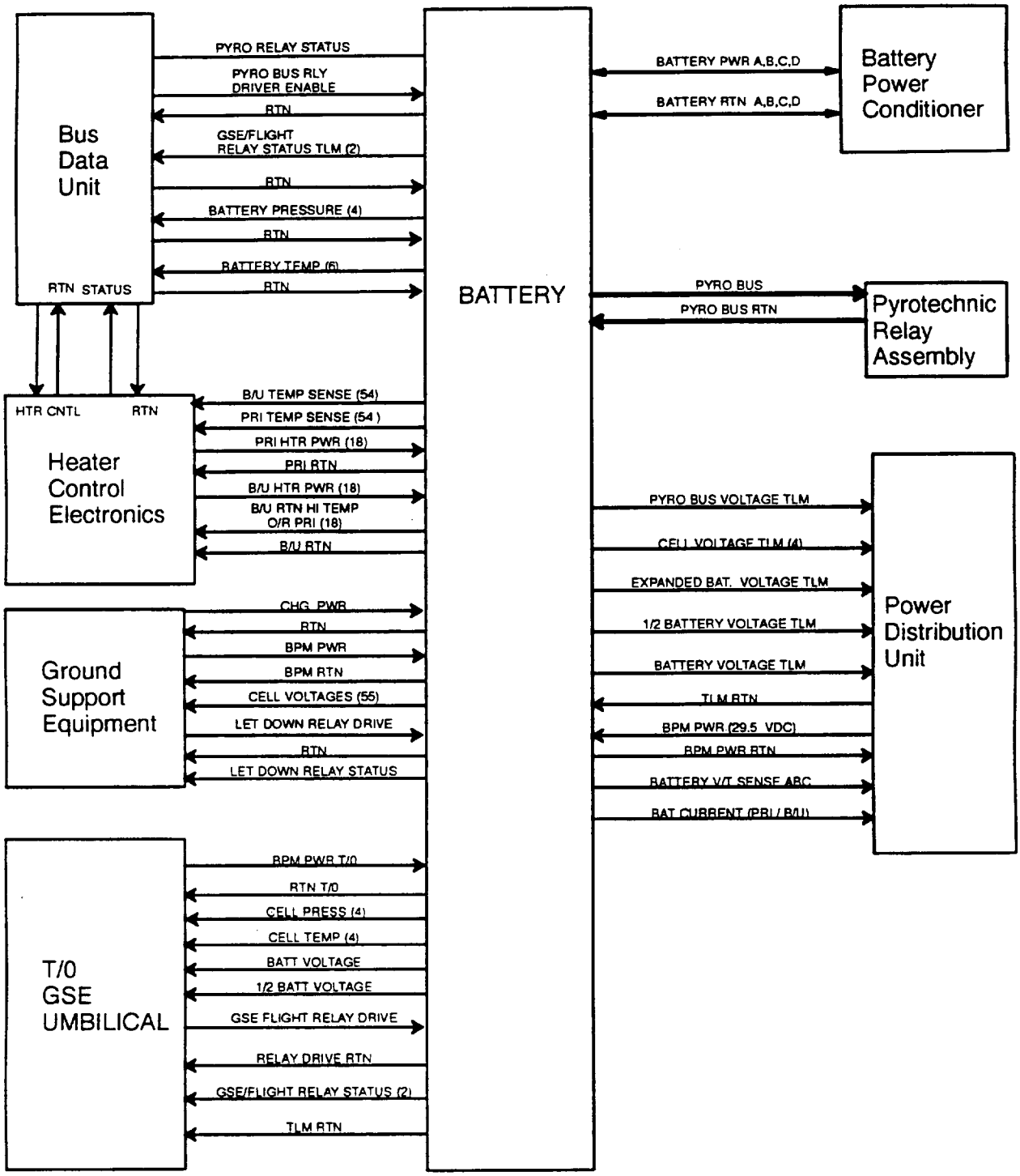

Figure 7. Battery Interfaces

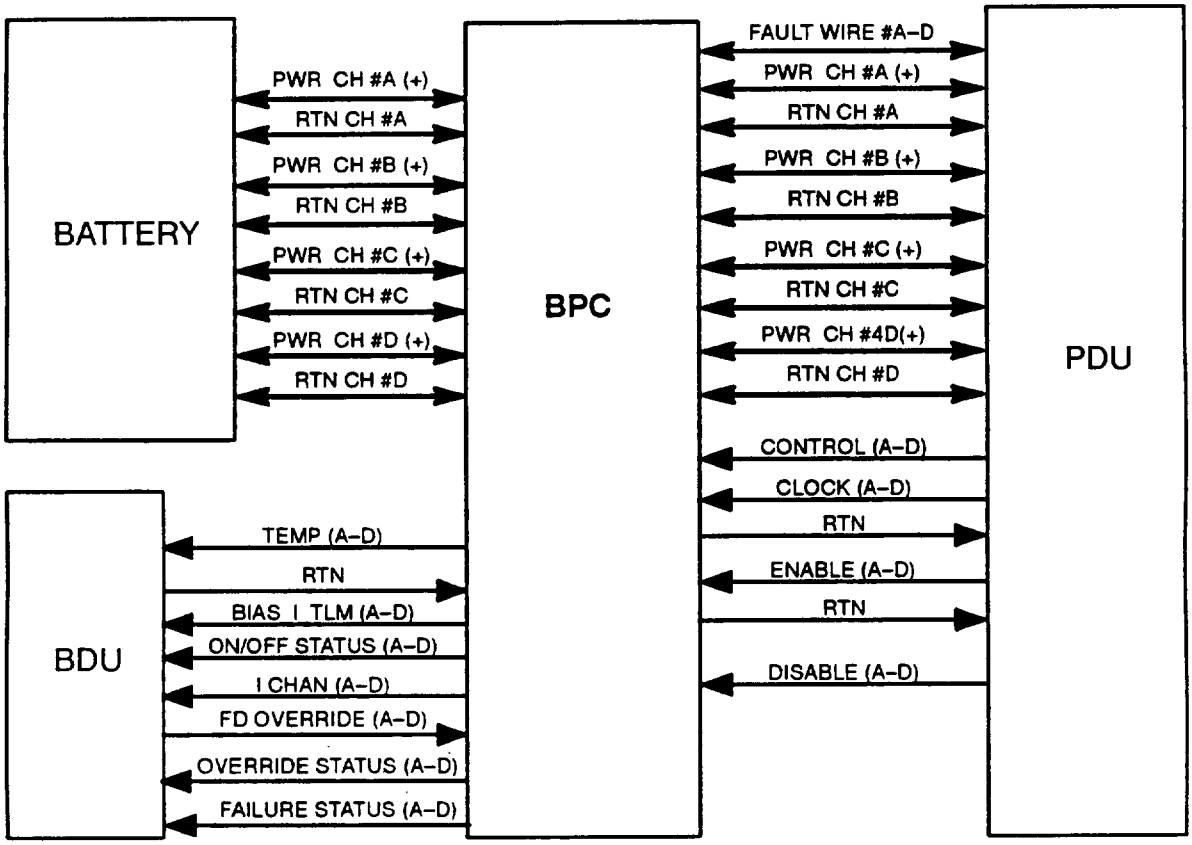

Figure 8. BPC Interfaces

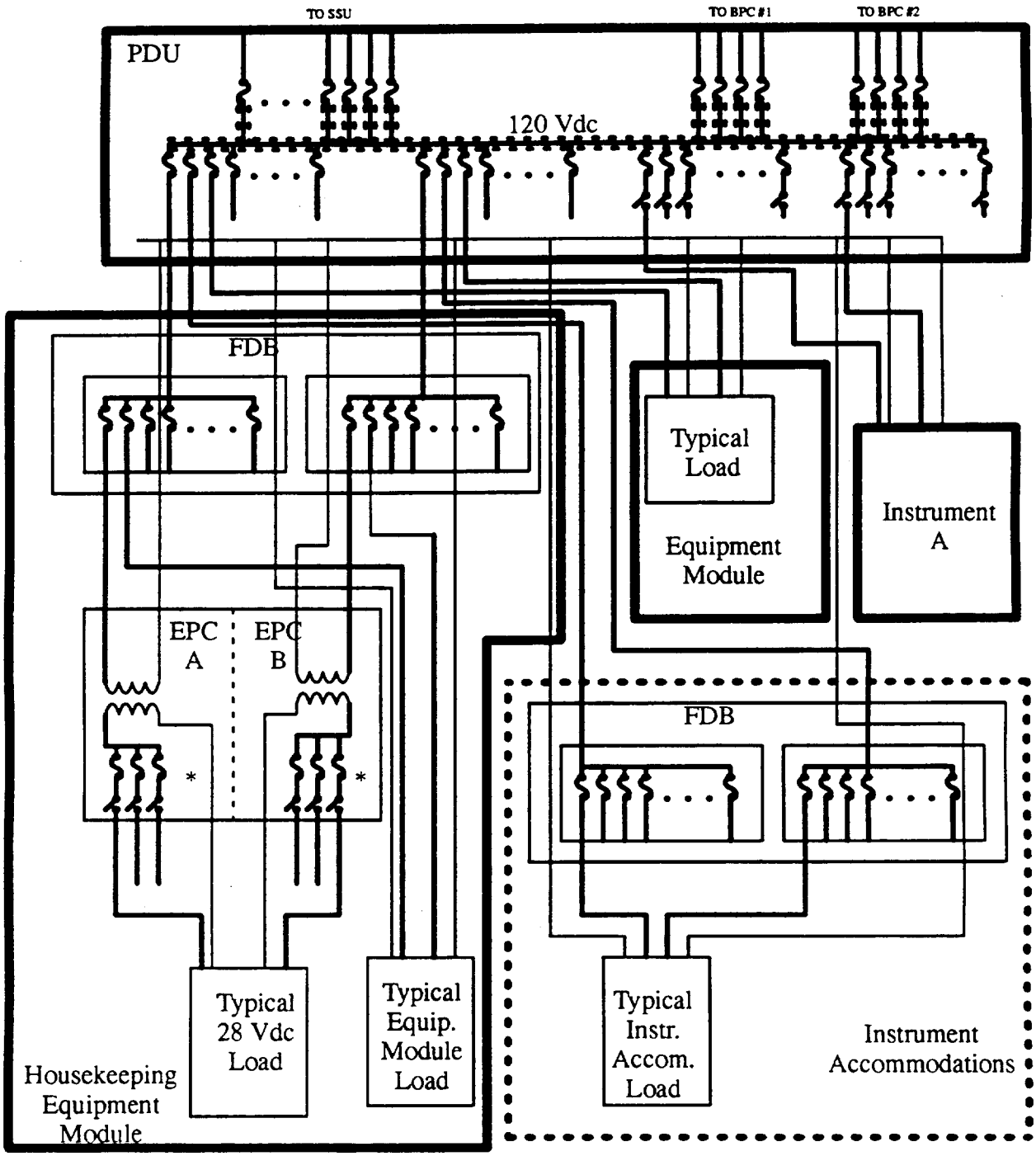

* Fuses and Relays as required

Figure 9. Fuse and Distribution Board and Electrical Power Conditioner Interfaces

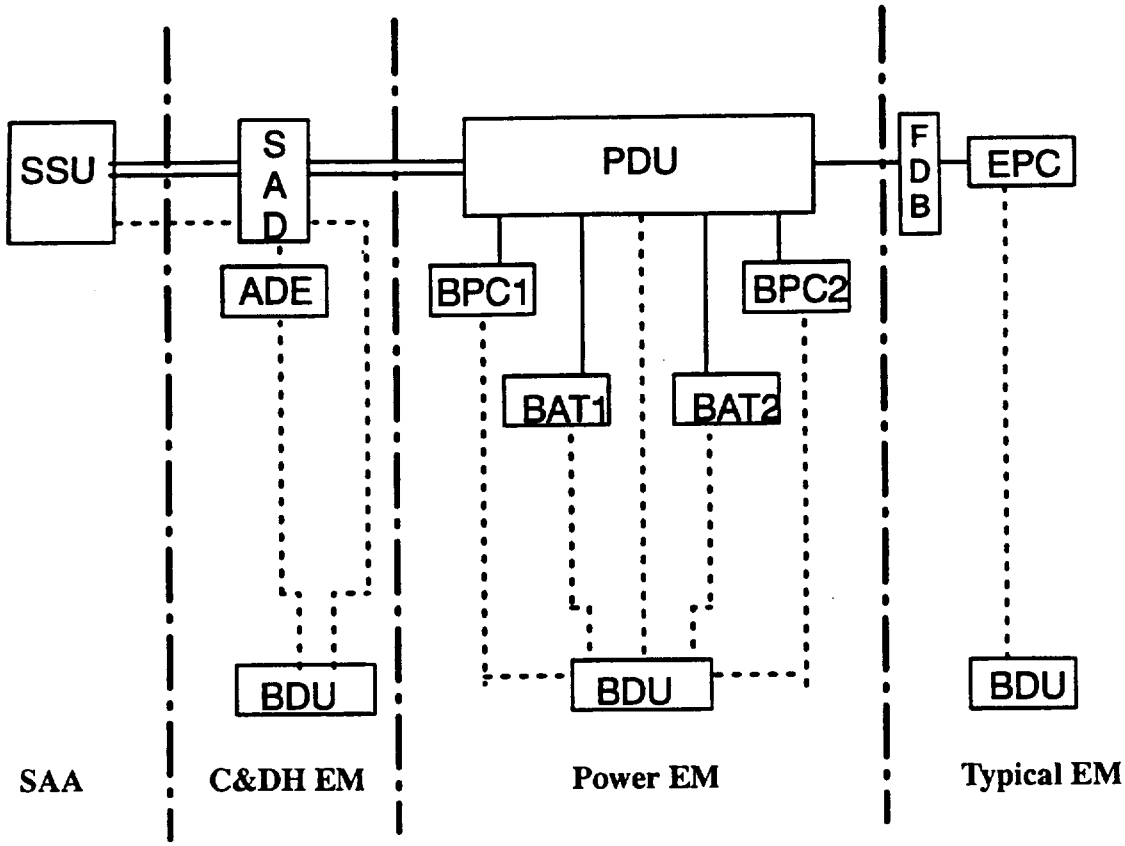

Figure 10. EPS/BDU Interface

3.1.2.2.15 S/C Core

A FDB shall be provided to feed S/C HCE on core structure.

3.1.2.2.16 Instrument Accommodations Electronics Interfaces

The EPS shall provide 120 Vdc primary power to each instrument accommodations electronics via two redundantly fused feeds from separate PDU connectors. Distribution of +120 Vdc power locally shall be via a FDB assembly, which shall provide fused power to the instrument's Heater Control Electronics (HCE) and Bus Data Unit (BDU). The FDB for ASTER shall provide power feeds for two BDUs. The EPS shall provide the CERES instrument with two instrument accommodations electronics.

3.1.2.2.17 Electrical Interfaces

The EPS shall comply with the requirements of the GIS, IS20008501, Section 3, regarding Power, Grounds, Standard Signal Interfaces, Electro–explosive devises, Test Points, and Connectors and Pin Allocations.

3.1.2.2.18 Mechanical Interfaces

The EPS shall comply with the requirements of the GIS, IS20008501 Section 4, regarding Coordinate Systems, Physical Characteristics, Design and Construction, Mounting, Alignment, Mechanisms, Dynamic Characteristics, Structural Criteria, and Tooling. The EPS shall incorporate interfaces for external stimuli or simulators where necessary for ground testing as defined in Section 4 herein.

3.1.2.3 Thermal Interfaces

The EPS shall comply with the requirements of the GIS, IS20008501 Section 5, regarding thermal interfaces, environmental flux parameters, and thermal control hardware.

3.1.3 Major Component List

The major components of the EPS shall be as listed in Table I.

Table I. Major Components

S/S Component	Qty	Major Function (Location)
Solar Array Assembly	1	Conversion of solar energy into electrical energy. (Deployed from Spacecraft)
Array Drive Electronics	1	Control SAD shaft rotation (C&DH/COMM Equipment Module)
Batteries	2	Store electrical energy for use during Spacecraft eclipse periods and/or daytime loading. (Power Equipment Module and Hex Bay Panel)
Sequential Shunt Unit	1	Regulates main bus by shunting excess array electrical power during daytime periods. (SAA)
Power Distribution Unit	1	Contains bus regulation/fault protection equipment and distributes power and returns to all Spacecraft loads. Provides power to Battery Pressure Monitors (BPM), receives and conditions battery telemetry (Power Equipment Module). Provide redundantly fused power distribution paths to all Spacecraft loads.
Battery Power Conditioner	2	Supplies charge power to batteries during sunlight periods and regulates main bus during discharge periods. (Power Equipment Module)
Fuse Distribution Box	2	Provides redundantly fused power distribution internal to Spacecraft subsystems modules and instruments. (C&DH/COMM EM, Recorder EM, RWA EM, Propulsion, Direct Access Subsystem EM, and Instruments)

Note: The Power harness is considered part of the Electrical Accommodations subsystem.

3.2 Characteristics

3.2.1 Performance

3.2.1.1 Solar Array

The EPS shall utilize a single wing, photovoltaic Gallium Arsenide (GaAs) solar array for solar energy conversion. The array shall provide 5 kW (EOL) worst case (Day 225 10:15 nodal crossing (n.c.)) to ensure positive energy balance.

3.2.1.2 Energy Storage

The EPS shall utilize two NiH_2 secondary batteries for energy storage to provide power during eclipses and, if necessary, daytime loads if solar array power is insufficient to support load.

3.2.1.2.1 Number of NiH_2 Cells

Each NiH_2 secondary battery shall be comprised of 54 cells, of 50–ampere (nameplate) hour capacity (at 20 ^{0}C) each.

3.2.1.2.2 Depth of Discharge

The depth of discharge (DOD) shall not exceed 30% in normal operation or 35% with one cell failed per battery. Discharges to a DOD not to exceed 65% are allowable at launch, which will require more than one orbit to fully recharge the batteries.

3.2.1.2.3 Battery Life

The minimum on–orbit operational life of each battery assembly shall be five years with one cell failure (open or short).

3.2.1.2.4 Battery Overtemperature Control

Battery overtemperature control, in the form of Voltage/Temperature (V/T) limit control, shall be provided to protect batteries from excessive over–temperature during charging.

3.2.1.2.5 Battery Reconditioing

No on–orbit battery reconditioning shall be required.

3.2.1.3 EPS Primary Functions

The EPS shall:

a. Provide all instrument, HGA, and housekeeping electrical power during all mission phases for a minimum operational lifetime of five years without servicing.

b. Provide commands and telemetry to monitor and control subsystem performance to the degree required to isolate faults and provide alerts for emergencies.

c. Provide for connecting and disconnecting the instruments and HGA from the main electrical bus.

d. Provide telemetry and command interfaces in accordance with GIS (Section 3), to allow for monitoring and managing of redundant functions.

e. Provide fusing for protection of power sources and power harnesses against overloads or faults in the distribution and/or user subsystems

f. Provide double insulation of the main power distribution to protect against shorts in the Power Distribution Unit.

g. Provide independent, fused, dual power feeds to protect the user loads from damage due to faults in other user subsystems.

3.2.1.4 Power

3.2.1.4.1 Average Load Power

The EPS shall be capable of providing a minimum of 2530 W orbit average to the total Spacecraft loads, excluding the battery recharge power. The EPS shall be designed for a peak spacecraft load of 3000W, without violating the 2530W orbit average requirement.

3.2.1.4.2 Instrument Power

The EPS shall be capable of providing 100% of the total instrument power after five years of mission life per the UIID and the GIIS. The EPS shall support each instrument independent of the other instruments, not to exceed total power limits allocated to the instrument set as defined in the CEI PS20005396.

3.2.1.4.3 Power Quality

The requirements for the electrical power users in designing and usage of power distribution and conversion equipment shall be as defined in the following documents:

a. EMC Control Plan PN20005869

b. General Interface Specification for EOS IS20008501

c. General Instrument Interface Specification GSFC–420–03–02

d. EOS Contract End Item Specification, PS20005396

3.2.1.5 Main Bus Characteristics

3.2.1.5.1 Bus Voltage Range

The EPS shall provide +120 ± 4% Vdc power to the instruments, HGA, and housekeeping subsystem loads, as measured at the load interface connector, during all mission phases and shall include the combined effects of DC regulation, EPS source generated ripple, and load transients. The load interface connector is defined as the point where the electrical accommodations subsystem's harness connects to a instrument, subsystem component, PSU, EPC, or FDB.

3.2.1.5.1.1 DC Regulation

The EPS shall provide a regulation range of + 4/–2% as measured at the PDU capacitor bank for loads ranging from 120 W to 5 kW as shown in Figure 11. The regulation range shall be referenced to 120 Vdc nominal. This voltage reference point shall be programmable (via the ground) to a lower value of 118 Vdc **(TBR–1)**. The nominal and startup reference value shall be 120 Vdc. Primary and backup command capability shall be provided. An additional 2% drop shall be allowed from the PDU capacitor bank to the load interface connector.

3.2.1.5.1.2 Ripple

The EPS shall ensure that the main bus ripple voltage as measured at the PDU capacitor bank, is within the limit defined in Figure 12. Note, this requirement is exclusive of load generated ripple.

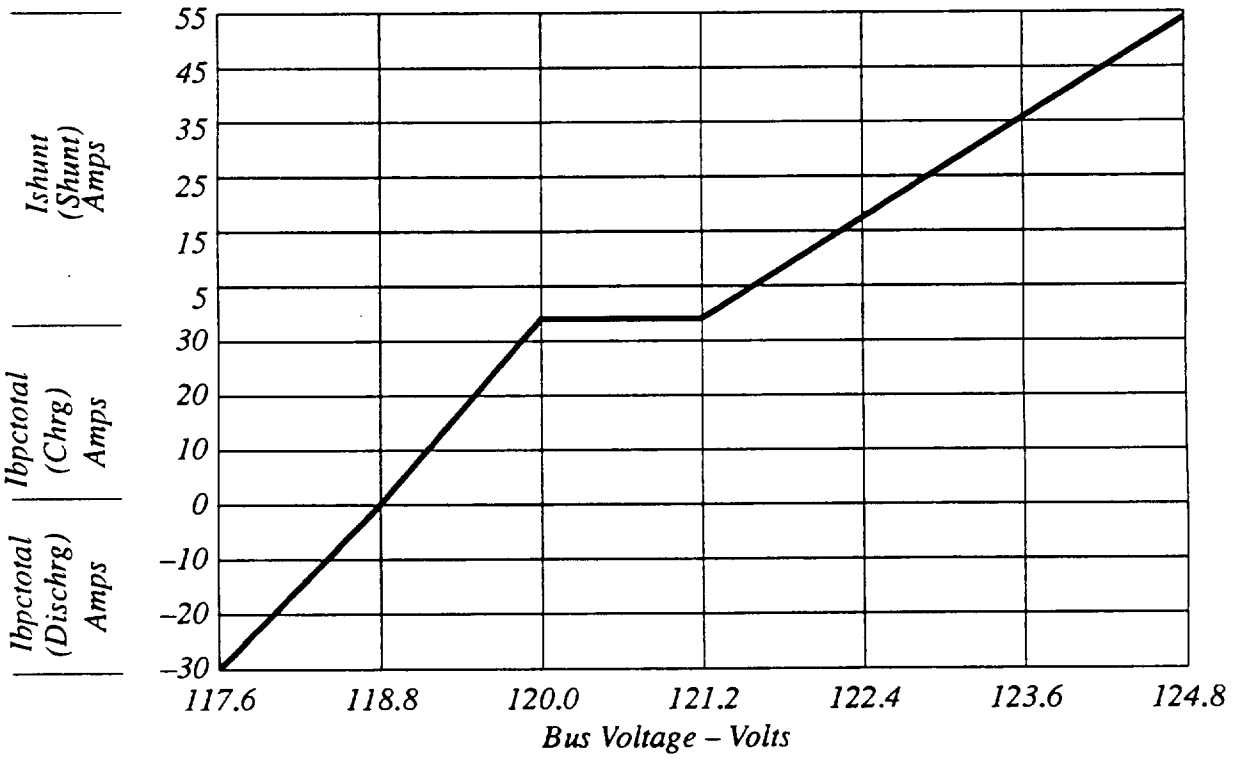

Figure 11. Bus Voltage Regulation Profile

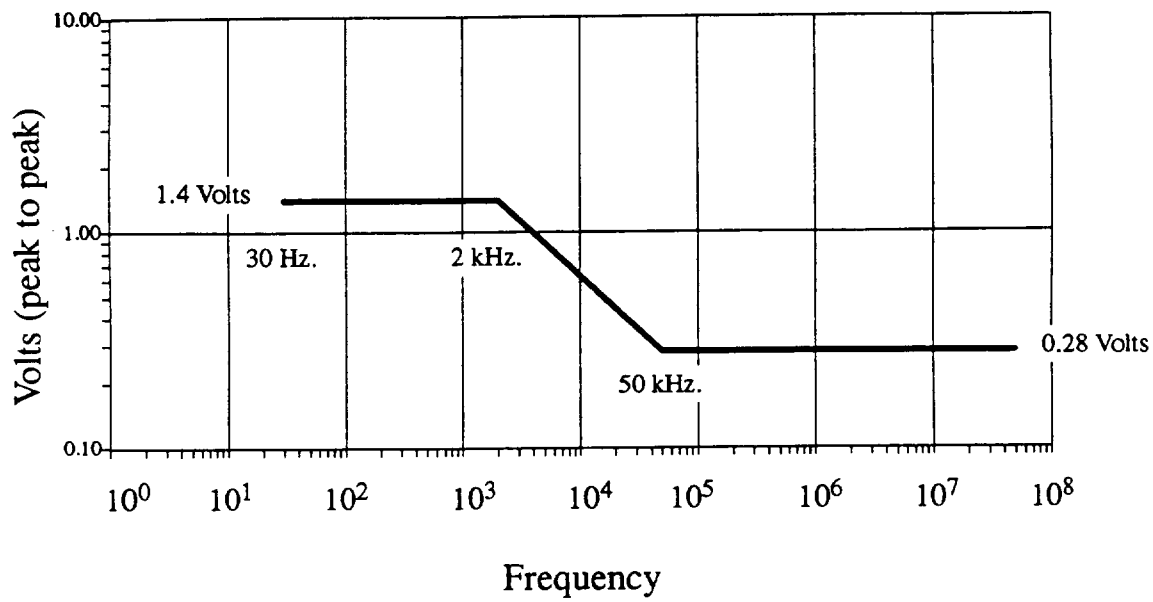

Figure 12. EPS Prime Power Ripple Limits

3.2.1.5.1.3 Load Transients

The EPS shall limit the bus transient voltage undershoot or overshoot, as measured at the PDU capacitor bank to 3.0 volts (within the described voltage regulation) and shall recover to within 10% of its final value in 10 ms for the following positive or negative going load steps:

a. 10A with a maximum current rate change of 50 mA/µs

b. 6A with a maximum current rate change of 20 mA/µs

3.2.1.5.2 Fault Operation

3.2.1.5.2.1 Overvoltage Operation

Under fault conditions, the maximum bus voltage shall be limited to +132 Vdc.

3.2.1.5.2.2 Undervoltage Operation

Under fault conditions, the EPCs located within the PDU, SSU and BPC components shall operate within specification at a bus voltage down to 50 V.

3.2.1.5.2.3 Survivability

All EPS components shall be capable of surviving bus voltage from 0.0 Vdc to 132 Vdc.

3.2.1.5.3 Distribution Drop

The power cable voltage drop percentages will be less than or equal to:

a. PDU to user loads 2%

b. BPC to PDU 2%

c. Battery to BPC 2%

d. SSU to PDU 1% (includes slip rings)

3.2.1.5.4 Bus Impedance

3.2.1.5.4.1 Bus Source Impedance

The bus source impedance, as measured across the PDU capacitor bank, shall be less than 0.2 ohms, 0.1 Hz to 100 kHz.

3.2.1.5.4.2 Impedance at User Interface

The bus source impedance, as seen at any load interface connector, shall be less than that in Figure 13.

3.2.1.5.4.3 User Differential Mode Impedance

The user differential mode impedance (Z_{dm}) shall be as given in the General Interface Specification (IS20008501) in Section 3.1.1.3.2.

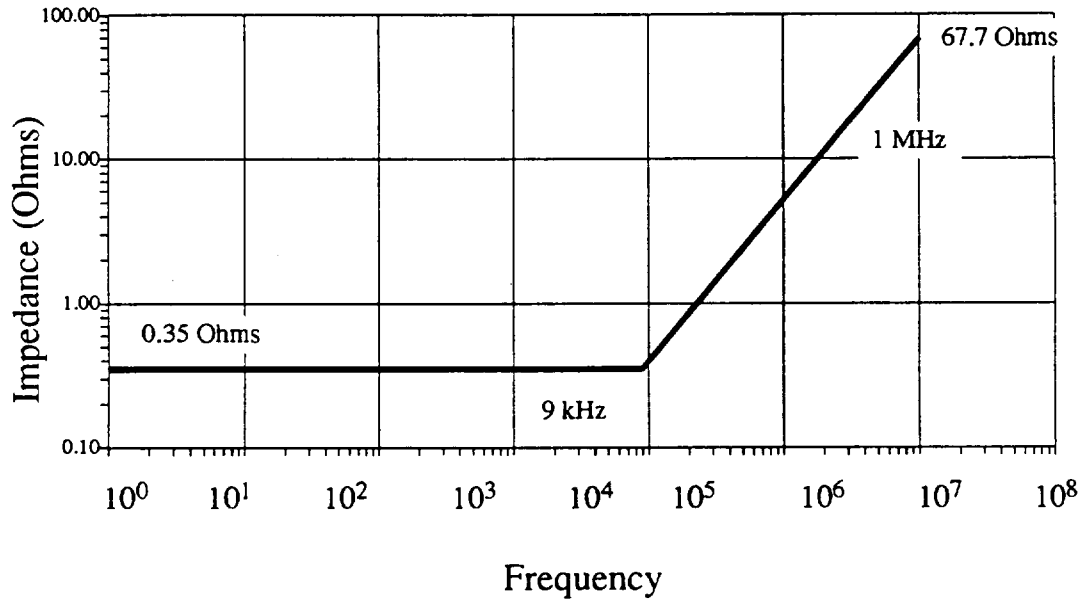

Figure 13. Impedance at User Interface

3.2.1.5.5 Stability

The PDU, in conjunction with the characteristics of the SSU, BPCs, and Spacecraft loads, shall be stable and shall provide a minimum of 30 degrees of phase margin and a minimum of 5 dB of gain margin under worst case EOL conditions. The subsystem shall provide a minimum of 40 degrees of phase margin and a minimum of 8 dB of gain margin under nominal operating conditions.

3.2.1.6 28 V Regulated Secondary Power

The EPS EPCs, located within the PDU and SSU, shall be Group 2 type (G2) and provide secondary power as per the component specifications.

3.2.1.7 Pyrotechnic Device Power

3.2.1.7.1 Requirements

The pyrotechnic bus system will consist of two unfused buses, but diode–isolated, that are independently sourced from the 22nd cell of each battery. The Electrical Accommodations Subsystem (EAS) shall provide pyrotechnic relay assembly (PRA) for each pyro bus for activating the pyrotechnic actuator devices on the Spacecraft.

3.2.1.7.2 Pyro Bus Voltage Range

The EPS pyrotechnic bus voltage shall range between 24.1 V and 35.5 V, as measured at the battery.

3.2.1.7.3 Pyro Bus Current Capability

Each pyrotechnic bus shall have a current capability of up to 48 amperes for 100 milliseconds.

3.2.1.8 Power Management and Distribution

All power distribution wiring shall be either short–circuit protected or current limited.

3.2.1.9 Operational Life

The EPS shall have a minimum on–orbit operational lifetime of five years.

3.2.1.10 Launch Vehicle Compatibility

a. The EPS shall be compatible with the Atlas IIAS launch vehicle. The (EPS) design shall not preclude launch on a Titan IV/NUS launch vehicle.

b. The EPS shall comply with the Spacecraft to Launch Vehicle Interface Requirements Document (PS20008503) and the Western Space and Missile Center Range Safety Specification (WSMCR–127–1).

c. The EPS equipment shall be designed to withstand the most severe of the environmental levels imposed by the Atlas IIAS and the Titan IV.

3.2.1.11 Sensor Power and Conditioning

The EPS shall provide voltages for energizing all the EPS subsystem sensors. Telemetry signal conditioning shall be provided as required, within the appropriate component.

3.2.1.12 Grounding

The EPS grounding shall conform to the General Interface Specification (PS20008501), except as stated below.

3.2.1.12.1 Primary Power

The EPS primary power subsystem shall be referenced to chassis at a single point in the Power Distribution Unit (PDU) at the negative side of the bus capacitor bank. This point is the prime power reference point.

3.2.1.12.2 Secondary Power

The secondary grounding shall conform to the General Interface Specification (PS20008501), except that secondary power used by EPS components shall be referenced to the prime power return.

3.2.1.12.3 Fault Grounding

The EPS system shall implement a fault ground system as per the EOS–AM EMC Control Plan (PN20005869).

3.2.1.13 Command and Telemetry Support

3.2.1.13.1 Telemetry

The EPS component telemetry bandwidth allocations shall be as given in Table II.

Table II. EPS Component Telemetry Bandwidth Allocations

EPS Component	Health Monitoring Tlm Stream (1 kbit H/K)	Nominal Telemetry Stream (16 kbit H/K)
Sequential Shunt Unit / SAA	18	575
Array Drive Electronics	1	6.5
Power Distribution Unit	16	900
Battery Power Conditioner	3	3
Battery	2	2

[1] The EPS telemetry shall be as listed in Appendix II.

[2] Telemetry points for the EPS shall be chosen in accordance with the telemetry point selection criteria in GIS, IS20008501, section 3.

[3] Telemetry shall be provided to C&DHS for both the health and safety and the housekeeping telemetry streams.

[4] Telemetry to be included in both streams shall represent two separate samplings of the telemetry points rather than a duplicated stream from a single sampling.

[5] All telemetry provided for the health and safety stream shall also be included in the housekeeping stream.

[6] All sensed failures and any corrective actions taken shall be reported to the ground via housekeeping telemetry.

[7] The EPS shall periodically repeat this report until commanded to stop such reports.

[8] EPS telemetry shall be available in all ground and flight phases of the mission.

[9] The telemetry content shall remain constant among modes to the extent such data is available in each given mode.

3.2.1.13.2 Commandability

The EPS component command allocations shall be as given in Table III.

Table III. EPS Component Command Allocations

EPS Component	BDU	Relay	Serial	Logic
Battery	Power EM	4	–	–
PDU	Power EM	62	8	8
ADE	C&DH/Comm EM	16	2	–
SSU / SAA	C&DH/Comm EM	–	2	–
BPC	Power EM	–	–	8

[1] The EPS commands are listed in Appendix I.

[2] The EPS shall accept, and execute upon receipt, all commands received from the C&DH subsystem.

[3] The EPS shall accept and execute commands to override or inhibit the execution of automatic functions which may interfere with Spacecraft operations or jeopardize the health of the Spacecraft. Such functions shall include, as a minimum, those which may cause:

a. The transition of the Spacecraft out of science mode;

b. The issuance of any commands whose execution may be inadvisable after a particular anomaly, and;

c. The issuance of any commands which would configure the subsystem to follow a particular redundant path (one which may have been assessed to be faulty).

3.2.1.13.3 Commanded Configurations

[1] The EPS shall be commandable to known states regardless of earlier or current states.

[2] No single command shall place the subsystem into a configuration from which it cannot recover, regardless of current configuration of the EPS or the Spacecraft.

[3] The EPS shall be capable of executing re–configuration commands necessary to support mode transitions and redundancy management.

3.2.2 Operational Modes

The EPS shall have operating states associated with the following Spacecraft operating modes: (see Table IV):

a. Ground test

b. Survival

c. Delta–V

d. Standby

e. Science

f. Safe

Table IV. Subsystem Operational Modes

	Observatory Mode					
Subsystem Mode	**Ground Test ***	**Survival**	**Delta – V**	**Standby**	**Science**	**Safe**
Ground Power	x					
Nominal Operation		x	x	x	x	x
Safe		x				x

* Includes Prelaunch

3.2.2.1 Ground Power

The EPS shall be capable of accepting power from Spacecraft external power interfaces for system test operations. The batteries shall be capable of being fully discharged, via GSE, (<.1V/cell) prior to Spacecraft transportation. The EPS shall be capable of operating from minimum load to full load.

3.2.2.2 Normal Operation Mode

The EPS shall operate in battery discharge, battery charge, and shunt modes during the following spacecraft modes: Survival, Delta – V, Standby, and Science. The EPS shall transition between its modes while meeting all performance specifications. The EPS shall be configured to normal operation mode at launch and shall be capable of being commanded to Safe/Survival mode by the ground or the SCS via the BDU. The EPS shall be capable of operating from minimum load to full load, (as per 3.2.1.5.1.1).

3.2.2.2.1 Eclipse Battery Discharge Mode

The EPS shall be capable of transitioning to discharge mode from any other mode. The EPS shall regulate the bus voltage by discharging the batteries during eclipse or when Spacecraft load is greater than solar array capability.

3.2.2.2.2 Daylight – Battery Charge Mode

The EPS shall transition to charge mode, in which the batteries are charged, from any other mode. The EPS shall be capable of transitioning to the discharge mode in the event of a load demand exceeding solar array capability or entry into eclipse.

3.2.2.2.3 Daylight – Shunt Mode

The EPS shall transition to Shunt mode, in which the batteries are charged and excess solar array power is shunted, from any other mode. The EPS shall be capable of transitioning to the charge or discharge modes in the event of a load demand exceeding solar array capability or entry into eclipse.

3.2.2.3 Safe Mode

The EPS shall have a single configuration for levels of Safe and Survival mode operations that involve the loss of the SCC control (except for the ADE). The EPS shall be able to survive safe mode operation for an indefinite time. Levels of Safe mode and Survival mode shall be entered with loss of "I'm OK" signal to the PDU command decoder from the BDU. The EPS shall not exit from safe mode until commanded by the ground via the C&DHS. The EPS safe mode is defined as:

a. V/T curve 4 selected (As defined in the Battery Specification, PS20008746, PS20008882)

b. Charge rate C/4.25 (11.8 A) selected

c. Array Drive Electronics (ADE) in safe mode operation either:

   1. Earth pointing: ADE operates closed loop with the coarse sun sensor (CSS) inputs to point the solar array towards the sun, or

   2. Sun pointing: ADE drives the array to index position (open loop mode).

3.2.3 Physical Characteristics

3.2.3.1 Mass

The mass of the EPS shall not exceed 1390 lbs. Table VI defines the EPS component mass allocations. The center–of–mass, products of inertia, and mass estimate accuracies shall be as defined in Section 4 of the GIS, IS20008501.

3.2.3.2 Durability

The EPS shall use materials and components capable of withstanding five years on–orbit environmental conditions without evidence of damage which may degrade subsystem performance.

[1] The EPS shall be made up only of materials and components capable of withstanding the environmental conditions specified in 3.2.7 without evidence of damage as defined below.

[2] The EPS shall also be capable of withstanding, without evidence of physical damage (as defined below), any wear due to the functioning of the system.

[3] Damage shall be considered to be any change in the EPS or components which may degrade subsystem performance to levels below those specified herein.

[4] The EPS shall be capable of meeting all operational requirements as specified herein, in the environments specified in 3.2.7.4 and 3.2.7.5, for the duration of five years on orbit.

3.2.3.3 Layout and Dimensions

The EPS layout and maximum component dimensions shall be in accordance with the Interface Control Documents of the EPS components (PDU, BPC, SSU, and battery).

3.2.3.4 Maintainability Impact on Design

[1] To the extent practical, the EPS shall facilitate maintenance by being functionally, mechanically, and electrically independent from all other Spacecraft elements except as stated in Section 3.1.2 herein

[2] and by being modular to the extent practical.

[3] The EPS shall be designed to use existing ground support equipment (GSE), wherever practical, rather than requiring the design of new equipment.

3.2.3.5 Handling Features

The EPS and/or GSE designs shall include handling features which reduce the likelihood of damage to any flight equipment.

3.2.4 Power Characteristics

The EPS shall operate per the performance requirements specified herein when supplied power as specified in Section 3 of the GIS, IS20008501.

3.2.5 Power Usage

The EPS power resource allocations shall be as defined in Table V.

Table V. Power Resource Allocation (Watts)

	Ground Test Mode	Survival Mode	Delta Voltage Mode	Stand-by Mode	Science Mode	Safe Mode
Minimum	39	145	145	145	145	145
Maximum	145	145	145	145	145	145

*Note: Propulsion Module EPCs and PSU NOT included

3.2.5.1 Power Exclusion Rules

None

3.2.6 Reliability

[1] The probability of mission success (P_s) for the EPS shall be at least 0.94 for a five–year mission life. Mission success is defined as meeting all the performance criteria specified in section 3.2.

[2] The EPS reliability program shall comply with the requirements of the PAR, GSFC 420–05–02.

3.2.6.1 Storage Restrictions

Limited–life components which may require change–out during storage shall be identified and tracked in the Critical Items List, 20008652.

3.2.6.2 Vulnerability Factors

The following steps shall be taken to reduce EPS vulnerability to damage:

Vulnerable Area	Protective Measures
Battery Assembly	Protective covers
Connectors	Protective covers
Solar cells	Protected by blanket box

3.2.6.3 Failure Tolerance

The EPS shall be designed such that no single failure prevents meeting mission requirements.

[1] The EPS shall be tolerant of any single, credible, hard failure including a failure in the EAS harness servicing the EPS.

[2] No failure shall induce any other failure.

[3] After any single EPS failure, the EPS shall continue to provide at least the minimum services identified for safe/survival mode in paragraph 3.2.2.3 without any interruptions which may threaten the survival of any Spacecraft component or instrument.

3.2.6.4 Failure Propagation Restrictions

[1] No single failure shall cause loss of a redundant functional path for any critical function,

[2] No event shall cause the loss of any critical or non–critical functional path resulting in the loss of the alternate or redundant path.

[3] The EPS shall ensure that no instrument or component failures may propagate failures to other Spacecraft elements. This shall be accomplished by providing independent, fused power feed to all instruments and components. Cross–strapped power shall be fused or current limited such that no single failure can disable power to a instrument or component.

[4] The EPS, via BDU command (or HGA) shall be capable of enabling or disabling of delivering power to an instrument which, if drawn beyond allocated levels.

3.2.7 Environmental Conditions

[1] The EPS components shall remain undamaged during,

[2] and following exposure to the protoflight environmental test levels corresponding to the ambient environments defined in the GIS, IS20008501 Section 6.

[3] The EPS and its components shall remain undamaged during,

[4] and following exposure to the acceptance environmental test levels corresponding to the ambient environments defined in the GIS, IS20008501 Section 6.

[5] Test levels shall be as defined in the Verification Specification, PS20005404.

[6] Damage shall be as defined in section 3.2.3.2.

[7] Where practical, the EPS shall not impose operational constraints due to natural environment conditions during checkout, launch, and on–orbit operations. The battery shall not be operated outside its thermal operational limits.

3.2.7.1 Storage, Integration, and Test

The EPS shall be capable of being held for testing and/or storage for the period defined in the GIS (IS20008501 Section 6) under the pre–launch conditions stated therein for [1] thermal, [2] contamination, [3] humidity, and [4] electro–magnetic interference (EMI), without suffering any damage as defined above. Each EPS component shall be transitioned from un–powered to normal operations at the cold operating thermal limit. The battery storage requirements shall be as defined in the battery panels specifications, PS20008746 and PS20008882.

3.2.7.2 Shipment

The EPS shall comply with the following transportation environmental requirements as defined in the GIS (IS20008501 Section 6) [1] thermal, [2] contamination, [3] humidity, [4] EMI, [5] loads, and [6] shock. The Spacecraft is assumed to be horizontal for all flight transportation and either horizontal or vertical for all ground vehicle transportation.

3.2.7.3 Launch

The EPS shall comply with the following launch environmental requirements as defined in the GIS (IS20008501 Section 6) [1] thermal, [2] contamination, [3] Radiated RF, [4] EMI, [5] loads, [6] shock, and [7] pressure [8] acoustic vibration, [9] lightning and [10] cosmic ray.

3.2.7.4 On–orbit

The EPS shall comply with the following on–orbit environmental requirements as defined in the GIS (IS20008501 Sections 5 and 6) [1] thermal, [2] contamination, [3] pressure, [4] EMI, [5] loads, [6] shock, [7] orbital debris, [8] micrometeoroids, [9] vibration, [10] charged particle, [11] atomic oxygen, [12] magnetic, and [13] electro–static discharge.

3.2.7.4.1 Eclipse Duration

The EPS shall be designed to operate and maintain positive energy balance at a maximum eclipse duration of 34.84 minutes.

3.2.7.4.2 Array – Sun Beta Angle Variation

The EPS shall be designed to be compatible with the expected range of array–sun beta angles of 13.5 to 30.8 degrees.

3.2.7.5 Electromagnetic Radiation

[1] The EPS shall be compatible with its specified operating environment and meet the requirements for the Spacecraft, as specified by the EMC Control Plan, PN20005869.

[2] The EPS and its components shall comply with the ionizing radiation design requirements specified in the GIS (IS20008501, Section 6).

3.2.7.5.1 Grounding, Bonding, and Shielding

The EPS circuits shall meet the requirements of grounding, bonding and shielding for components, subsystems, and systems as defined in the Electromagnetic Compatibility Control Plan (PN20005869).

3.3 Design and Construction

3.3.1 Material, Processes, Parts, and Finishes

All materials, manufacturing processes, parts and finishes shall be selected in accordance with the corresponding requirements in the GIS (IS20008501, Section 4).

3.3.2 Nameplates and Product Marking

All EPS elements shall be labeled in accordance with the GIS (IS20008501, Section 4).

3.3.3 Workmanship

Workmanship during fabrication of the EPS electrical components shall be in accordance with NASA standards as specified in NHB 5300.4 (3A, 3G–3K).

3.3.4 Interchangeability

EPS elements shall be interchangeable as defined in the GIS (IS20008501, Section 4).

3.3.5 Safety

Measures for personnel safety shall be taken in all phases of the design, manufacturing, and testing, in order to ensure personnel safety in accordance with WSMCR 127–1. The design shall meet the factors of safety presented in the GIS (IS20008501, Section 4).

The EPS shall meet the requirements of the Safety section of the Product Assurance Implementation Plan (PAIP), 20005397.

The EPS shall utilize the Battery Enable Plug (supplied by Electrical Accommodations) to provide rapid accessibility to the battery during pre–launch for safety reasons.

3.3.5.1 General

Where practical, hazards shall be eliminated or removed through appropriate design measures. Hazards which cannot be eliminated or removed shall, where practical, be prevented through incorporation and use of safety devices or features. Remaining hazards shall be controlled through the use of warning devices and/or special procedures.

3.3.5.2 Automatic Hazard Detection and Safing

Automated detection and safing of hazards which may cause personnel injury or loss of the Spacecraft shall be independent of those subsystems being monitored. Where practical, the detection and safing of lesser hazards shall also follow this practice.

3.3.5.3 Safety Interlock Mechanisms/Techniques

The Spacecraft Bus will incorporate safety interlock mechanisms, implemented in hardware or software, to prevent the execution of predefined commands which are potentially hazardous to personnel or to the Spacecraft, without prior confirmation or arming by ground operators.

3.3.5.4 Liquids and Gasses

The design of subsystems and components which utilize liquids or gasses shall preclude hazards due to the release of such fluids during maintenance operations.

3.3.5.5 Pressurized Vessels

The EPS includes nickel hydrogen battery cells, which shall be designed to include the pressurized equipment factors of safety specified in the GIS (IS20008501, Section 4).

3.4 Documentation

3.4.1 Specifications

All parent and component specs associated with this specification are shown in the EOS–AM Spacecraft Specification Tree, 20008536.

3.4.2 Drawings

a. Power Module IS20009999

3.4.3 Technical Manuals

a. Battery operations manuals will be provided.

3.4.4 Test plans

a. Comprehensive test plan for EOS–AM S/C PN20008664
b. Test plan for EOS–AM S/C EPS breadboard PN20008679
c. Power Equip. Module and Battery Panels test plan PN20001408
d. Solar Array Assembly test plan PN20008514
e. Test plans will be provided for all components.

3.4.5 Procedures

All test plans will have corresponding test procedures.

3.4.6 Installation Instructions

a. Battery installation instructions
b. SSU installation instructions
c. SAA installation instructions
d. Power Equipment Module installation instructions
e. EPS components installation instructions

3.4.7 Software Documentation

All Computer Software Configuration Items (CSCIs) will be documented as specified in the Software Management Plan, 20008604.

3.5 Logistics

3.5.1 Maintenance

The EPS shall be designed to require no maintenance after testing other than that required during long periods of storage as specified in Section 3.2.7.1 herein.

3.5.2 Supply

The following components shall have spares during ground test:

a. Array Drive Electronics (ADE)
b. Sequential Shunt Unit (SSU)
c. Fuse Distribution Box (FDB)
d. Battery Power Conditioner (BPC)
e. Power Distribution Unit (PDU)

3.6 Precedence

3.6.1 Precedence of Design Criteria

EPS design decisions shall be made to accommodate the following design criteria in the following order of precedence:

a. Safety

b. Performance

c. Reliability

d. Cost

3.6.2 Documentation Precedence

If conflicts arise between documents, the EPS shall adhere to design requirements as stated in the document nearest the top of the following list of requirement documents. The General Interface Specification (GIS) is applicable to the EPS design only as invoked herein and is therefore not included in the following list:

a. Requirements Description Document (RDD)

b. Product Assurance Requirements for the EOS Observatories (PAR)

c. General Instrument Interface Specification (GIIS)

d. Contract End Item (CEI) Specification

e. External Interface Control Documents (ICDs) (e.g. EOS to Launch Vehicle, EOS to TDRSS, etc)

f. Subsystem and Major Assembly Specifications

g. Component Specifications

3.7 Major Component Characteristics

3.7.1 Allocations

The EPS components shall be designed to mass and power levels at or below the allocations shown in Table VI. The EPS components shall be designed to levels at or above the reliability allocations shown in Table VI.

Table VI. EPS Component Allocations

Component	Qty	Total Mass	Power*	Total Dissipation	Reliability
		(lb)	(Watts)	(Watts)	(P_s)
Solar Array Assembly	1	351	0	N/A	.999999
Power Battery Assembly	1	319	6.6	132	.990755
Hex Bay Battery Assembly	1	325	6.6	132	.990755
BPC	2	47	36	158	.996101
SSU	1	98	43.8	70.3	.999255
PDU	1	102	38.4	32	.998199
FDB – instr.	4	7.5	0	4	.996063
FDB – (Recorder EM)	1	1.9	0	1.0	.996063
FDB–Comm/CD&H	1	1.9	0	1.0	.996063
FDB – RWA	1	1.9	0	1.0	.996063
FDB – PROP	1	1.9	0	1.0	.996063
FDB – DAS	1	1.9	0	1.0	.996063
FDB – GN&C	1	1.9	0	1.0	.996063
FDB – PWR	1	1.9	0	1.0	.996063
EPC (PROP)	1	8.8	32.1	5	.999925
ADE	1	14.7	9.2	5.5	.980987
PSU	1	14.4	15.5	15.5	.999447
Total		1390	188		.940000

* orbit average power (EOL) consumed from the 120 Vdc Spacecraft bus.

3.7.2 Solar Array Assembly Characteristics

The solar array assembly (SAA) shall collect and convert solar energy into electrical energy for Spacecraft loads and battery charging during the five–year lifetime of the Spacecraft.

3.7.2.1 Function

The SAA shall, as a minimum, contain the following functions or components:

a. A maximum of 28 solar array circuits

b. A maximum of 2.5 amps per circuit

c. Controlled deployment of the solar array

d. Provide 5 kW at 127 Vdc at SSU interface after five years in orbit on day 225 10:15 (n.c.)

e. Telemetry to monitor SAA deployment and on–orbit electrical performance

f. Supply sun tracking functions for input to the ACE

3.7.2.2 Electrical

The conversion of solar energy into electrical energy shall be accomplished by the use of GaAs photovoltaic solar cells.

3.7.2.3 Mechanical

The SAA, in the stowed configuration, shall be contained and supported within the launch vehicle envelope. The design shall be capable of withstanding all handling, launch, and orbital operations. SSA controls and actuators for calibration or adjustments shall incorporate mechanical stops where necessary to prevent damage.

3.7.3 Battery Assembly Characteristics

The EPS shall contain two battery assemblies. The battery assembly shall consist of 54 series–connected 50 ampere–hour (nameplate), Mantech Nickel–Hydrogen battery cells. Each battery assembly shall have three modes of operation: Charge, Discharge and Letdown (Ground operations only). The battery shall transition between charge and discharge modes in response to PDU/BPC closed–loop control operation. The letdown mode (Ground operations only) shall be commanded after the BPC is disabled.

3.7.3.1 Function

Each battery shall, as a minimum, contain the following functions or components:

a. Four (4) power connections from each channel of the BPC

b. Store electrical power to meet 2530 W orbit average load over a maximum eclipse period of 34.8 minutes (98.9 minute orbit) at 5 years

c. Ability to letdown battery with the spacecraft power off (ground command only)

d. Telemetry to determine the state–of–charge and battery "health"

e. Redundant V/T sense function

f. Pyro Bus (tapped at 22nd cell)

g. Fuses on each power feed to the BPC

h. Input/output connectors

i. 60 mil (minimum) Al cover to provide EMI and safety/handling protection

j. Capability to power BPMs via Spacecraft or GSE but not both simultaneously

k. Provide for BPMs and fuses on battery assembly

l. Pyro enable relay

3.7.3.2 Electrical

3.7.3.2.1 Battery End–of–Discharge Voltage

The minimum battery voltage at end–of–discharge shall be 54.0 V (1.0 V/cell) or 53.0 V with one cell failed (open or short).

3.7.3.2.2 Battery End–of–Charge Voltage

The maximum battery voltage at end–of–charge shall be 87 V (1.61 V/cell) for the temperature range –5°C to +20°C.

3.7.3.2.3 Voltage Range

The maximum battery voltage range shall be 53.0 V to 87.0 V under all conditions, with one or no cell failures.

3.7.3.2.4 Discharge Current

The battery discharge current shall be less than 18 amps average (during maximum science mode 2530W), or 30 amps peak.

3.7.3.2.5 Charge Current

The battery charge current range shall be 0 Amps to 23 Amps, in 65 steps (See Table VII), with a trickle charge rate of 0.55 Amps.

3.7.3.2.6 Life and Cycle Life

Each battery shall be capable of withstanding a minimum of 27,500 charge–discharge cycles corresponding to five years of on–orbit operation plus an additional 500 cycles of ground testing.

3.7.3.2.7 Failure Tolerance

The battery assembly shall be tolerant of any failure, cell shorted or cell open.

3.7.3.3 Mechanical

The battery shall be designed to be testable as a single assembly, mounted on its thermal baseplate. The design shall provide electrical isolation between cell housing and thermal baseplate.

3.7.3.3.1 Pressure Factor of Safety

All pressurized components (e.g., battery cells) shall be designed in accordance with MIL–STD–1522A, Section 5, Approach A. Battery NiH_2 cell pressure vessels shall have general factors of safety as:

a. Proof Pressure: 1.5 x Maximum Design Pressure (MDP)

b. Ultimate Pressure: 3.0 x Maximum Design Pressure (MDP)

3.7.4 Battery Power Conditioner Characteristics

The battery power conditioner (BPC) provides power conversion for battery charge and discharge control functions. During periods of sunlight, the BPC acts as a Pulse width modulated (PWM) buck charge regulator, which converts regulated bus power (@ V bus) to battery charge power (@ V bat). During eclipse, the BPC acts as a PWM boost discharge regulator, which converts battery power (@ V bat) to regulated bus power (@ V bus). There is one internally redundant BPC per battery with 4–3 redundancy.

3.7.4.1 Function

Each BPC shall, as a minimum, contain the following functions or components:

a. Bi–directional charge/discharge

b. Ability to clear fuses

c. Telemetry to determine BPC status

d. Input/output connectors

e. Individual EPCs to supply power to BPC channel control circuits

f. Ground fault wire ("green–wire") for each individual channel connection to the PDU

3.7.4.2 Electrical

3.7.4.2.1 BPC Operating Modes

The BPC shall have four modes of operation, as determined by the mode controller in the PDU and internal fault detection circuitry:

a. Discharge (boost), where battery power is converted to supply loads and regulate the bus voltage.

b. Charge (buck), where bus power is converted to battery charge power at the battery voltage and current for battery charging. The BPC shall be capable of charging the battery at any of 65 commanded charge rates. In addition, the charge mode shall be

commandable to utilize any one of the 17 voltage/temperature (V/T) control limits for overcharge protection (curve 4 shall be the default). Commands are provided, via the BDU, and conditioned into the BPC command signals by circuits within the PDU.

c. Fault operation as per section 3.7.4.4 below.

3.7.4.2.2 Charge Mode Output Power

The BPC shall operate over the battery output voltage range of 50 Vdc – 90 Vdc and a battery input current range of 0 – 23 Amps. The maximum battery charging power shall be 1800 W (with 3 channel operation). The nominal battery charge power is 950 W.

3.7.4.2.3 Discharge Mode Output Power

The BPC shall operate over a battery voltage range of 50 – 90 Vdc and an output current range of 0–15 Amps. The maximum BPC battery discharge power shall be 1800 W (3 channel operation) for battery voltages between 65 – 90 Vdc and 1000 W (maximum) for battery voltages between 50 – 65 Vdc.

3.7.4.2.4 Efficiency

The BPC efficiency (defined as the ratio of output to total input power), in either charge or discharge mode, shall be greater than:

a. 94% for battery voltages between 75 – 90 Vdc @ 1800W

b. 93% for battery voltages between 65 – 75 Vdc @ 1800W

c. 92% for battery voltages between 50 – 65 Vdc @ 1000W

3.7.4.3 Redundancy

There shall be one BPC per battery. The BPC shall consist of four separate power channels, utilizing 4–for–3 channel redundancy. In the event of a channel failure, the BPC channel gain shall be adjustable to avoid "mismatched" loading between the batteries.

3.7.4.3.1 Command and Telemetry

The BPC shall provide commands as specified in Appendix I and telemetry as specified in Appendix II.

3.7.4.4 Fault Operation

[1] Each BPC channel shall provide fault detection and correction (either degraded operation or inhibit channel) for a minimum of:

a. Overcurrents in excess of 6 A charge and 16 A discharge

b. The failure to null PDU demand current and BPC input channel current

c. Overvoltages in excess of 132 Vdc

d. Channel overtemperature in excess of 115°C **(TBR–2)**

[2] Each channel shall accept a fault detection override input command which shall override all failure detection and correction circuits, except overvoltage failure detection.

[3] 3 channels (minimum) operational at all times.

3.7.5 Sequential Shunt Unit Characteristics

The sequential shunt unit (SSU) shall regulate the solar array output voltage by means of a series of shunt segments which operate sequentially from "full–off" to "full–on" as a function of Spacecraft load variations. The shunt segment next in line to turn "full–on" is switched at a 200 kHz rate by a PWM signal used for fine control. The solar array circuit isolation diodes are contained in the SSU.

3.7.5.1 Function

The SSU shall contain the following functions or components, as a minimum:

a. Shunt excess solar array power to maintain bus regulation under control of the PDU mode controller by using up to 28 shunt regulators

b. Isolation of solar array circuits from power bus with isolation diodes

c. SAA command decoding

d. Telemetry to determine SSU performance

e. 120 Volt fused power to SAA DEU

f. Redundant EPCs to power SSU control circuits

3.7.5.2 Electrical

3.7.5.2.1 SSU Operating Modes

The SSU shall have three operating modes, as determined by the mode controller in the PDU and internal fault detection circuitry:

a. Transmit mode, where PDU control voltage demands no shunting

b. Shunt mode, where PDU control voltage demands partial to full shunting

c. Fault operation, where one or more shunts are controlled by internal protection circuitry in order to limit the bus output voltage to 132 V.

3.7.5.2.2 Circuit Current

Solar array current is limited to 0 to 2.75 amps per array circuit (solar array circuit short–circuit current @ BOL).

3.7.5.2.3 Coarse Sun Sensor

The SSU shall provide connecting circuitry to the ACE of the coarse sun sensor signals.

3.7.5.2.4 Command and Telemetry

[1] The SSU shall provide command capability and telemetry conditioning to/for the DEU and internal heaters. The primary command decoder and telemetry encoder shall be directed to primary DEU, heater, etc.; and backup command decoder and telemetry encoder shall be directed to backup DEU, heater, etc.

[2] The SSU shall provide commands as specified in Appendix I and telemetry as specified in Appendix II.

3.7.5.3 Redundancy

[1] The SSU shall accept and maintain redundant (2–for–3) shunt control inputs from the PDU such that the loss of any one control input shall not result in the loss of SSU shunt control.

[2] Redundant command decoders, EPCs, and telemetry conditioners shall be utilized.

3.7.5.3.1 Fault Operation

[1] Under any single part failure condition each channel shall limit its output voltage to 132 volts maximum.

[2] The failure of a redundant EPC within the SSU shall not cause an interruption of modes as described in Section 3.7.5.2.1.

[3] The EPCs shall have overcurrent, overvoltage, overtemperature, secondary undervoltage, and input undervoltage failure detection. All shall latch with the exception of input undervoltage.

3.7.6 Power Distribution Unit Characteristics

The power distribution unit (PDU) contains the main bus filter capacitor bank, bus voltage error amplifiers and mode controller, and the central power distribution point. The PDU shall provide control signals to the SSU to regulate the solar array voltage and shall provide control signals to the battery power conditioners, BPCs, to control battery charge/discharge.

Redundant fuses and connectors provide distribution of the +120 Vdc bus to the Spacecraft loads such that each load receives two independent fused lines from different PDU connectors. Only the instrument loads and the HGA shall have relays to provide switching of power feeds, thus insuring personnel safety during I&T. These normally closed relays shall be operated under zero amps switching only (dry switching).

3.7.6.1 Function

The PDU assembly shall, as a minimum, provide the following functions or components:

a. Distribute 120Vdc power to the spacecraft

b. Generate independently buffered BPC and SSU control signals and BPC multi–phase clock

c. Provide fault protection to SSU and BPC inputs

d. Fault protection (and normally closed relays for HGA and instruments) for Spacecraft loads

e. Battery Pressure Monitor (BPM) power

f. Selected battery telemetry conditioning

g. BPC and PDU command decoding, with hardware interlock to prevent more than a single BPC channel from being ground commanded off

h. Provide commands to BPC

i. Input and output connectors

j. Safe/Survival mode for battery charging

k. External power bus interface to be used by GSE

l. Redundant EPCs to provide power to PDU control circuits

m. Monitoring for each of current instrument feed

n. Monitoring of housekeeping load current

o. Monitoring of solar array load current

p. Monitoring of fault current

q. Provide ground programmable voltage reference

3.7.6.2 Electrical

3.7.6.2.1 PDU Operating Modes

The PDU (mode controller) shall have three modes of operation:

a. Discharge mode, where battery power is converted to regulate the bus voltage and supply the spacecraft load

b. Charge mode, where solar array power is converted by the BPCs to battery charge power to maintain bus regulation.

c. Shunt mode, where the SSU is controlled to shunt excess solar array power and thus regulate bus voltage and the BPC charge current is limited by commanded:

   1. Charge rate

   2. VT limit

3.7.6.2.2 Battery Current

[1] The PDU to BPC path shall be sized for 5.0 Amperes for each of the four channels.

[2] The PDU/BPC control loop shall operate so as to equalize battery currents during battery discharge to within ±2% error. This error shall be defined as:

$$\% \text{ error} = \frac{(I_{bat1} - I_{bat2})}{(I_{bat1} + I_{bat2})} * 100$$

[3] Each BPC shall be capable of charging the associated battery at any of the 65 commanded charge rates as shown in Table VII.

[4] The PDU shall condition the battery current (meter shunt located on battery) to provide 50A full scale with an accuracy of ±3% of full scale and 256 count resolution.

Table VII. Battery Charge Rates

No.	Current (A)	C Rate	Accuracy
0	0	0	
1	0.360	C/139	
2	0.720	C/69	
3	1.080	C/46	
4	1.440	C/35	
5	1.800	C/28	
6	2.160	C/23	
7	2.520	C/20	
8	2.880	C/17	
9	3.240	C/15	
10	3.600	C/14	
11	3.960	C/12.6	
12	4.320	C/11.6	
13	4.680	C/10.7	
14	5.040	C/9.9	
15	5.400	C/9.3	
16	5.760	C/8.7	
17	6.120	C/8.2	
18	6.480	C/7.7	
19	6.840	C/7.3	
20	7.200	C/6.9	
21	7.560	C/6.6	
22	7.920	C/6.3	
23	8.280	C/6	
24	8.640	C/5.8	
25	9.000	C/5.6	

Table VII. Battery Charge Rates (Continued)

No.	Current (A)	C Rate	Accuracy
26	9.360	C/5.3	
27	9.720	C/5.1	
28	10.080	C/5	
29	10.440	C/4.8	
30	10.800	C/4.6	
31	11.160	C/4.5	
32	11.520	C/4.3	
33	11.880*	C/4.2*	
34	12.240	C/4.1	
35	12.600	C/4	
36	12.960	C/3.9	
37	13.320	C/3.8	
38	13.680	C/3.7	
39	14.040	C/3.6	
40	14.400	C/3.5	
41	14.760	C/3.4	
42	15.120	C/3.3	
43	15.480	C/3.2	
44	15.840	C/3.15	
45	16.200	C/3.1	
46	16.560	C/3	
47	16.920	C/2.95	
48	17.280	C/2.9	
49	17.640	C/2.8	
50	18.000	C/2.75	
51	18.360	C/2.7	
52	18.720	C/2.65	
53	19.080	C/2.6	
54	19.440	C/2.55	
55	19.800	C/2.5	
56	20.160	C/2.48	
57	20.520	C/2.45	

Table VII. Battery Charge Rates (Continued)

No.	Current (A)	C Rate	Accuracy
58	20.880	C/2.4	
59	21.240	C/2.35	
60	21.600	C/2.3	
61	21.960	C/2.28	
62	22.320	C/2.24	
63	22.680	C/2.2	
64	23.000	C/2.17	

* Safe Mode Values

3.7.6.2.3 Voltage/Temperature Limiting

The charge mode shall be commandable to utilize any one of the 17 voltage/temperature (V/T) control curves utilizing the V/T sense from its associated battery. The default curve shall be curve number 4. The curves shall be defined in the battery performance specification (PS20008746, PS20008882). The V/T DISABLE command shall be equivalent to setting the VT limit to curve 0 (V_{bat} = 90 V @ –10°C).

3.7.6.2.4 Bus Voltage Range

The PDU, in conjunction with the BPCs and SSU, shall provide a nominal bus voltage range of 120 Vdc (nominal/default voltage reference set point) +4%, – 2% Vdc (2% voltage drop to user loads) at the central distribution point, allocated as follows:

a. 117.6 – 118.8 Vdc (1%) for BPC discharge mode

b. 118.8 – 120 Vdc (1%) for BPC charge mode

c. 120 – 121.2 Vdc (1%) for BPC/SSU deadband

d. 121.2 – 124.8 Vdc (3%) for SSU shunt mode

These ranges include tolerances for mode operating set points. The PDU shall provide for ground commandable voltage reference set point capability: 120 Vdc (nominal/startup) and 118 Vdc (offset) **(TBR–1)**.

3.7.6.2.5 Array Input Current

The SSU to PDU current path shall be sized for 2.5 Amperes from each non–shunted solar array circuit.

3.7.6.2.6 Fused Outputs

The PDU shall provide redundantly fused outputs for subsystem loads and fused outputs to each BPC and SSU channel. The integrity of all parallel fuses, from the 120 V power bus, shall be testable at box and spacecraft level.

3.7.6.2.7 Fused Switched Outputs

The PDU shall provide switched, redundantly fused outputs for each instrument load and the HGA.

3.7.6.2.8 BPM Power Output

The PDU shall provide +29.5 Vdc ± 5% (6 watts maximum) to each of the batteries to provide power for 4 battery pressure monitors (BPM) on each battery.

3.7.6.2.9 Command and Telemetry

[1] The PDU shall condition battery voltage and current for EPS telemetry.

[2] The PDU shall provide commands as specified in Appendix I and telemetry as specified in Appendix II.

3.7.6.2.10 Redundancy

The command decoder shall be redundant and commandable such that both sides can be on simultaneously. Nominal operation shall be with both PDU command decoders powered on and operating. Not more than one command decoder shall be able to be powered off at any time.

3.7.6.2.11 Fault Operation

[1] The failure of a PDU command decoder shall not cause the battery current to exceed 125% of normal maximum current.

[2] The failure and subsequent switchover of the redundant BPC multiphase clock shall not cause an interruption in BPC charging or discharging.

[3] The failure of a redundant EPC shall not cause an interruption of modes as described in Section 3.7.6.2.1.

3.7.7 Fuse and Distribution Box Assembly Characteristics

3.7.7.1 Function

The Fuse and Distribution Box (FDB) assembly is the local +120 Vdc power distribution and protection point at the instrument and subsystem locations. It will consist of connectors and two fuse boards designed to distribute fused primary and back-up +120 Vdc to the subsystem hardware, BDU and associated EPC (if present) at a given location. The fuse size shall be based upon the normal peak operating current for each spacecraft load. The minimum fuse size shall be 0.5A.

3.7.7.2 Electrical

3.7.7.2.1 Maximum Fault Current

The FDB shall operate within specification with a maximum fault clearing current of 250 Amps for < 10 microseconds.

3.7.8 Array Drive Electronics (ADE) Characteristics

3.7.8.1 Function

The ADE provides control signals and power to the Solar Array Drive (SAD). The ADE shall provide for the following commandable drives in either direction:

a. 1, 2 and 3 ω rates

b. Rate adjustment capability of

   1. ±4.1% in 0.032% increments during on–orbit operations

   2. ±8.2% in 0.032% increments during transfer orbit operations

c. Stop

   where ω = 1.059 mRad/sec

3.7.8.2 Electrical

3.7.8.2.1 Normal Operation

The ADE shall receive rate and direction commands from the BDU and generate the required SAD motor drive signals.

3.7.8.2.2 Safe Mode – Earth Pointing

The ADE shall, when commanded to safe mode earth pointing, generate SAD motor commands to point the solar array towards the sun based on coarse sun sensor (CSS) data.

3.7.8.2.3 Safe Mode – Sun Pointing

The ADE shall, when commanded to safe mode sun pointing, drive the array to the index position.

3.7.8.2.4 Safe Mode – Open Loop

The ADE shall, when commanded by ground to override safe mode circuits, operate in safe mode open loop by accepting SAD motor commands to rotate the solar array at a fixed rate.

3.7.8.3 Redundancy

The ADE shall provide internal redundancy as needed to meet reliability requirement in Section 3.7.1.

3.7.9 Flight Software Characteristics

This section specifies the software requirements for the Power Monitor and Control Software (PMCS). This portion of the EOS–AM Spacecraft flight software supports the electrical power subsystem.

[1] Ground command and on–board computer control of the Electrical Power Subsystem (EPS) elements shall be provided through the Command and Data Handling (C&DH) subsystem.

[2] Monitoring of the EPS parameters shall be done through telemetry.

[3] The PMCS shall reside in the SCC computer.

[4] The PMCS shall provide autonomous control of EPS charge management and load shedding.

[5] The PMCS shall determine the day/night transitions and durations based on solar array ISC telemetry.

[6] The PMCS shall perform amp–minute integration on each of the two batteries during the discharge and charge periods to calculate the actual energy removed and returned to the battery.

[7] The PMCS shall determine the actual battery charge–to–discharge (C/D) ratio.

[8] The PMCS shall determine the theoretical energy return to the batteries.

[9] The PMCS shall determine the actual state of charge of the batteries.

[10] The PMCS shall determine the battery state of charge based on battery pressures.

[11] When the actual C/D ratio equals the desired C/D ratio, battery charging shall be switched from a voltage/temperature (V/T) limited commanded constant charge rate to a trickle charge constant current rate for the balance of the sunlight period.

[12] The PMCS shall determine the required battery charge rate (during variable charge operations) as a function of the battery DOD, the desired C/D ratio and approximately 5 minutes of trickle charge.

[13] If the battery does not trickle charge during the last five minutes of the sunlight period, an error message will be sent to the ground via telemetry.

[14] The PMCS shall determine the housekeeping, each individual instrument and the total load demand.

[15] The PMCS shall perform automatic load shedding based on a pre–defined load profile schedule in the event of failure or excessive overload that exceeds the maximum allowable battery depth of discharge.

[16] The PMCS shall determine the health of the solar array by calculating the "actual" solar array current as a function of Isc, number of shunts and total solar array load current.

[17] The PMCS shall provide alerts via telemetry to indicate off–normal operation of the EPS.

[18] The PMSC shall provide for either variable charge rate (calculated) or fixed charge rate (commanded) control of each battery.

[19] The PMCS default charge control shall be variable rate.

[20] The PMCS shall provide telemetry collection/conversion, grouping and comparison functions.

4 QUALITY ASSURANCE PROVISIONS

This section will outline the requirements and structure of a quality assurance program for the Electrical Power Subsystem (EPS). The purpose of the program is to demonstrate that the design of the EPS and its components meet the performance requirements, has been manufactured properly, and will operate as designed in association with all other Spacecraft interfaces. These tasks will be accomplished by conducting inspections, performing analyses, testing and/or performing functional demonstrations of the EPS hardware. Tests shall include mechanical and electrical functions in appropriate simulated environments that will verify expected component requirements for handling and transportation, subsystem integration, ground test, launch, acquisition, and on–orbit operations previously described in Paragraph 3.2.2.

The EPS design shall be reviewed with the support of the Spacecraft Flight Assurance Review Program defined in the PAIP, Section 2, Assurance Review Requirements. Additional internal reviews at the skill center level shall include technical progress and problem resolution, cost and schedule, and subsystem and component preliminary and critical design reviews. Subcontractor/vendor design and development activities are included in the EPS quality assurance program.

The basis for the EPS verification program implementation is the Spacecraft Verification Plan (VP), PN20005404, the Spacecraft Verification Specification (VS), PS20005404, and the Spacecraft Comprehensive Test Plan (CTP), PN20008664. The EPS verification program includes an engineering development effort designed to validate the appropriateness of the hardware design approach. Development includes the building and testing of component breadboards and engineering test models (ETM) of selected designs to verify circuit development, function evaluation, stability studies and interface performance. Development will not constitute verification, although data from development tests will be used to support verification activities.

An EPS breadboard, assembled from the component breadboards, will provide the basis for interface verification, stability and transient analysis, redundancy functionality and design verification. ETMs will be used to confirm electrical, packaging and manufacturing concepts while limited environmental exposure will be used to confirm worst–case performance capabilities. A summary of the EPS development plan is presented in Table VIII.

4.1 EPS Verification

Each requirement of Section 3.2 and 3.3 of this specification shall be verifiable. Verification shall be consistent with the verification matrix of Section 4.1 of the VP PN20005404, as it applies to the EPS.

The verification matrix for the EPS, shown in Attachment A supplied under separate cover, defines the applicable EPS requirement paragraph number, the specific requirement (with a paragraph reference to the CEI specification referenced in the VP verification matrix), method of verification (discussed below), verification classification and a brief description of the verification method.

4.1.1 Verification Phases

Phases shall be either Acceptance or Qualification as defined in PS2005404.

Table VI. EPS Development Plan

Component	Heritage	Bread-board/ Brassboard	Engineering Test Model	Qualification Test Model	Protoflight	Acceptance	Comment
Solar Array	NEW			x[4]	x	N/A	Q-Board Cycled 40,000 times -95°C - +105°C
Array Drive Electronics	UARS		X		x	N/A	
Batteries	New	x[1]		x[2]		x[3]	Cell Charac-terization & Life Test
Battery Power Conditioner	New	x	x		x 1st Unit	x Units 2 & up	
Sequential Shunt Unit	New	x	x		x 1st Unit	x Units 2 & up	
Power Distribution Unit	New	x	x		x 1st Unit	x Units 2 & up	
Fuse & Distribution Box	Series 7000				x 1st Unit	x Units 1 & up	Board Level

1 – Limited breadbard/brassboard will be built using cells from the characterization test sequence and used in life test.
2 – Qual tests will be performed on workhorse batteries.
3 – Performed on Flight hardware
4 – S/A qualification board representative of full solar array

4.1.2 Verification Methods

The following methods shall be used as appropriate to verify each of the requirements in Section 3.2 and 3.3: Demonstration, Test, Analysis, and/or Inspection. Each method shall be as defined in PS20005404.

4.1.3 Responsibility for Verification

In general, the responsibility for verification of each requirement specified in Sections 3.2 and 3.3 is that of Astro Space. Specifically the EPS subsystem engineers, component designers and subcontract support engineers shall assume direct responsibility. Each EPS component engineer shall develop a verification plan that supports the EPS plan.

4.1.4 Verification Conditions

Each EPS component shall be exposed to verification conditions which represent those environments encountered throughout the ground phase and flight mission. The environmental conditions and levels of exposure are defined in the VS, PS20005404, Section 4.

4.2 Testing

4.2.1 Reliability Testing

Reliability verification shall form a major part of the EPS verification program. Requirements and responsibility for reliability verification are found in Section 7, Design Assurance and Reliability Plan, of the PAIP, PN20005397. EPS component designers have primary responsibility for conducting Parts and Devices Stress Analysis (PAIP, 7.2.2.5), Worst–Case Analysis (PAIP, 7.2.2.6) and Trend Analysis (PAIP, 7.2.2.7). Secondary responsibility as defined in PAIP, Section 7, includes but is not limited to Failure Mode and Effects Analysis (PAIP, 7.2.2.2), Reliability Assessment (PAIP, 7.2.2.4) and identification of limited life items (PAIP, 7.2.2.8). All test data is to be collected, documented and used in support of the EPS reliability analysis conducted by Reliability Engineering. All testing shall be performed within the guidelines of the System Safety Plan outlined in Section 4 of the PAIP, PN20005397.

4.2.2 Engineering Evaluation and Test Requirements

4.2.2.1 Test Flows

Detailed test flows shall be generated for each EPS component. The test flows shall include the breadboard, ETM, or QTM processes as well as follow–on protoflight/flight verification flow. Tests shall be identified in the test flow with traceability to the particular requirement being verified in Section 3.2 and 3.3 of the applicable performance specification. Figure 14 is a typical component verification flow diagram which shall be used as a basis to develop detailed component verification

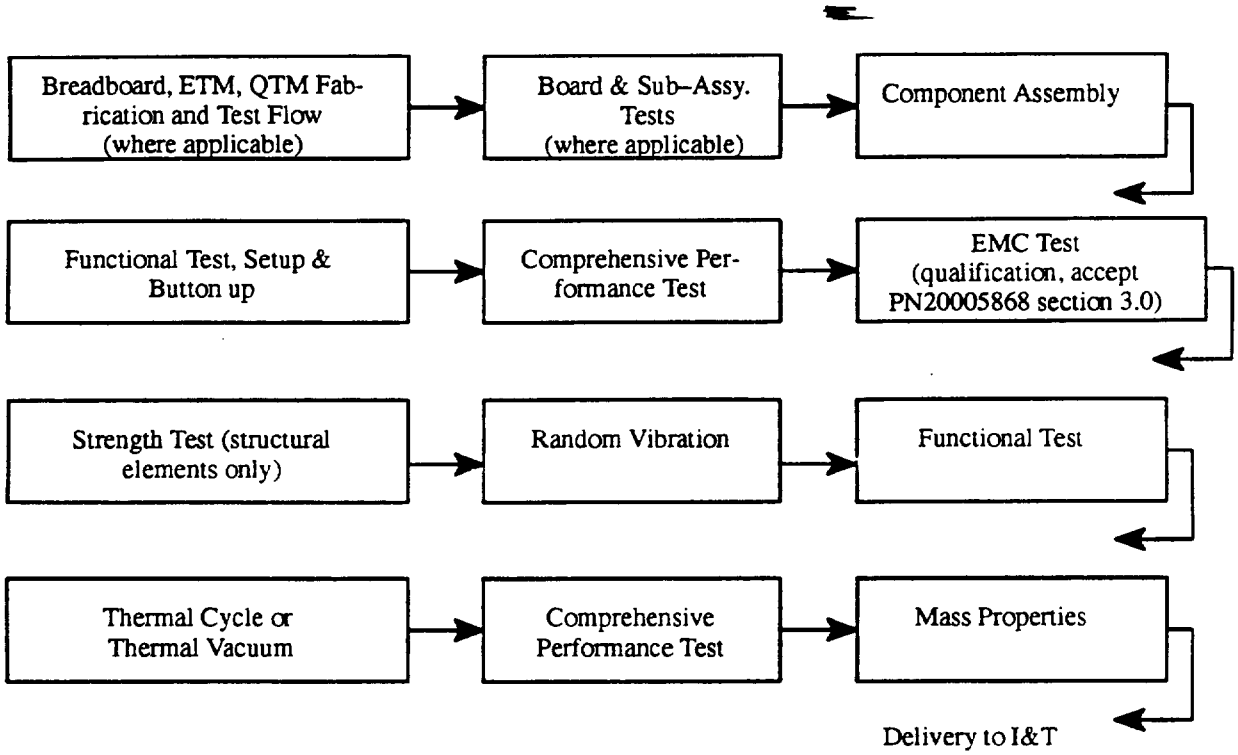

Figure 14. Typical Component Verification Flow

flow diagrams. The thermal cycle or thermal vacuum test shall contain a cold start test. The EPS overall verification flow diagram is shown in Figure 15. A detailed verification flow is presented in drawing 20001425, EOS–AM EPS Detailed Verification Flow Diagram.

4.2.2.2 Performance Tests

The EPS, its components, and all breadboards, where applicable, shall be subjected to the electrical performance tests defined in the Verification Specification, VS. Performance tests include Electrical Interface Tests, (or sometimes referred to as Interface Verification Test (IVT)), Comprehensive Performance Test (CPT), Limited Performance Test (LPT), and Limited Life Electrical Elements. These tests and their applicability in the verification plan are at the discretion of the test designer as defined in the VS.

The EPS has two elements which are considered limited life, i.e., solar cell blanket assembly and battery cell. These two components shall have life test programs defined and executed to verify performance capability to the EPS and Spacecraft mission requirements. Formal life test programs shall be developed, reviewed and implemented, upon approval, in a timely manner consistent with the EPS program schedule.

4.2.2.3 Verification Tests

Each EPS Component shall be subjected to the verification tests defined in VS, PS20005404, Section 4. Performance tests, as defined above in 4.2.2.2, shall be performed during verification tests to demonstrate functionality during a flight environment.

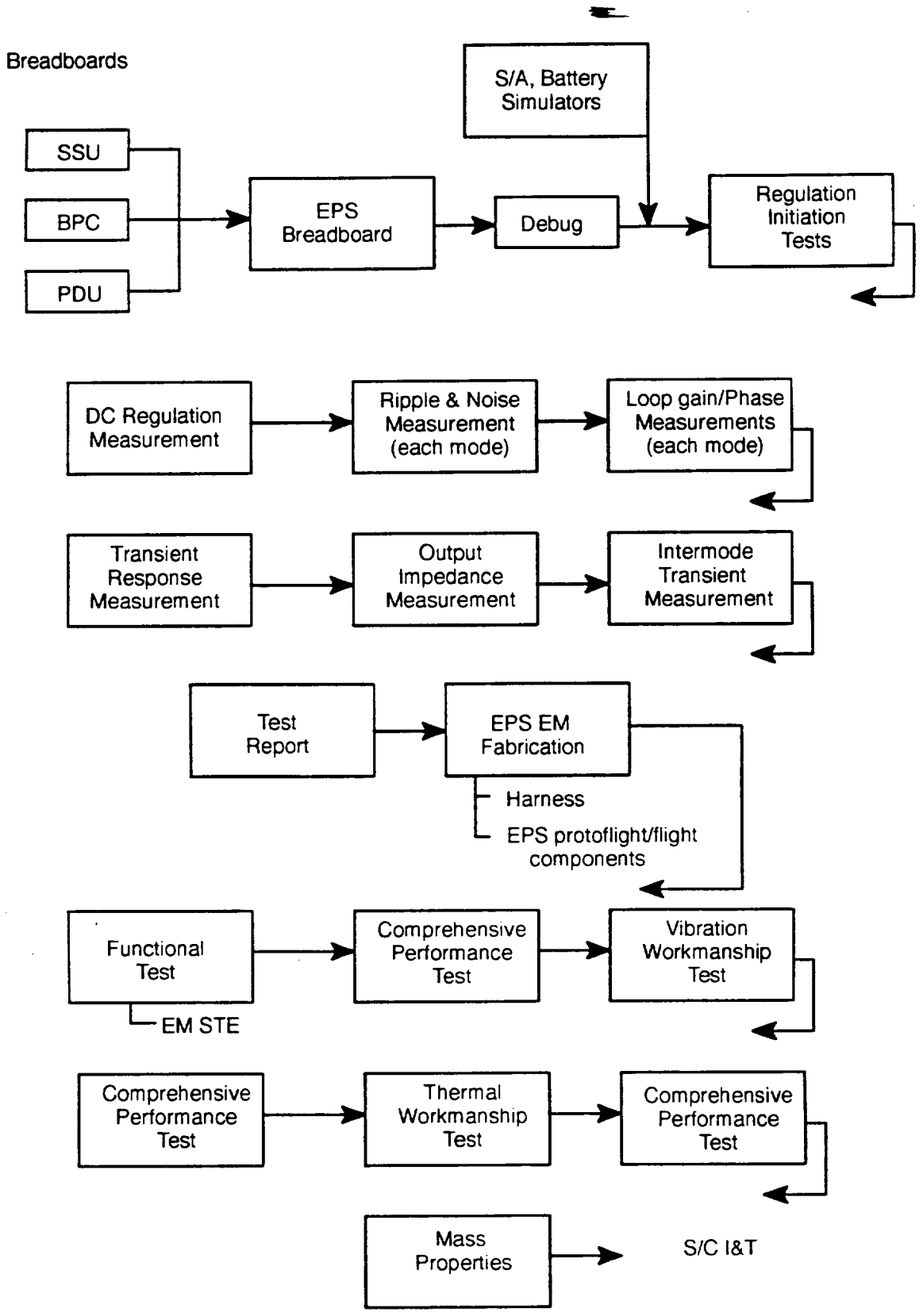

Figure 15. EPS Overall Verification Flow Diagram

4.2.3 Acceptance Testing

Acceptance testing shall be performed an all flight components to verify workmanship and functionality. The acceptance test levels are defined in VS, 20005404, Section 4.

4.2.4 Qualification Testing

Qualification testing of QTM and protoflight components shall be used to demonstrate adequacy of design limits. The qualification test levels are defined in VS 20005404, Figure 1, Comparison of Thermal Test Levels and Figure 2, Comparison of Vibro–acoustic Test Levels and Durations. The delta values shown in these figures are to be applied to the acceptance levels defined in VS Section 4.

4.2.5 Installation Testing, and Checkout

The performance test, Electrical Interface Tests, defined in the VS and referenced above in Section 4.2.2.2 will be implemented to verify that all interface signals are within acceptable limits or applicable performance specifications prior to integration of an assembly or a component into the next higher level. This is particularly applicable when integrating component breadboards into the EPS breadboard and before power application.

4.3 Special EPS Verifications

A special test of the EPS breadboard shall be conducted to verify electrical concepts and attainment of initial operating conditions, i.e., charge rate, and regulation stability. Additionally, special battery cell characterization test shall be conducted to establish or verify performance parameters within the required operating limits. These parameters shall include:

a. Charge efficiency

b. Current–voltage characteristics as a function of temperature, and state of charge

c. Ampere–hour capacity versus temperature

All test data shall be accumulated and summarized in a final technical report prior to the EPS CDR.

Any EPS units identified on the limited–life or critical items lists shall be tested in accordance with Verification Plan, PN20005404.

Any implementation of majority voting, for redundancy, shall be verifiable at the box and spacecraft levels of testing.

4.4 Test Equipment

[1] Existing test equipment shall be used wherever practical.

[2] Where new test equipment is required to test units which are physically or functionally identical or similar, the equipment shall be designed to perform its task(s) on each element of that group, where practical.

4.4.1 Test Equipment Safety Features

[1] Test equipment shall incorporate any safety interlocks or other safety features necessary to reduce the introduction of safety hazards by the test equipment.

[2] Any safety feature included in any Spacecraft test equipment shall give a visual, auditory, or electronic indication of activation when it is activated.

4.4.2 Test Equipment Verification

Unless otherwise specified herein, test equipment used to measure EPS performance characteristics shall be capable of demonstrating that:

a. it will not impose environments on the tested item(s) beyond the levels called for in the Verification Specification, PS20005404, and

b. it is capable of imposing the test levels called for in the Verification Specification, PS20005404.

4.4.3 Test Equipment Calibration

Test equipment shall be calibrated in accordance with GSFC 420–05–02.

4.5 Verification Documentation

The subsystem verification activities shall be documented in:

a. Verification Reports as defined in PS20005404

b. Test procedures

c. Test logs

d. Test Review Board meeting minutes

e. Analysis Reports

f. Failure Analysis

(This page intentionally left blank.)

5 PREPARATION FOR DELIVERY

The Electrical Power Subsystem equipments shall be handled, packaged, and transported in accordance with the requirements given in Astro Space PAIP, 20005397, Section 8.2.1.

(This page intentionally left blank.)

6 NOTES

6.1 Definitions

6.2 Acronyms and Abbreviations

ACE	Attitude Control Electronics
ADE	Array Drive Electronics
ASTER	Advanced Spaceborne Thermal Emission and Reflection Radiometer
BAT	Battery Assembly
BDU	Bus Data Unit
BEP	Battery Enable Plug
BOL	Beginning of Life
BPC	Battery Power Conditioner
BPM	Battery Pressure Monitor
C	Celsius (degrees)
C/D	Charge/Discharge
C&DH	Command and Data Handling
CEI	Contract End Item
CERES	Clouds & the Earth's Radiant Energy System
CMD	Command
COMM	Communication Subsystem
CSCI	Computer Software Configuration Item
CSM	Computer Status Monitor
CSS	Coarse Sun Sensor
DAS	Direct Access System
dc	direct current
DET	Direct Energy Transfer
DEU	Deployment Electronics Unit
DOD	Depth of Discharge
EAS	Electrical Accommodations Subsystem
ELV	Expendable Launch Vehicle
EM	Equipment Module

EMC	Electromagnetic Compatibility
EMI	Electromagnetic Interference
EPC	Electrical Power Conditioner
EOL	End of Life
EPS	Electrical Power System
ESD	Electrostatic Discharge
ESE	Earth Sensor Electronics
FDB	Fuse & Distribution Board
FOV	Field of View
FS	Factor of Safety
FSE	Flight Support Equipment
FSSE	Fine Sun Sensor Electronics
g	Acceleration of Gravity
GFE	Government Furnished Equipment
GN&C	Guidance, Navigation, and Control
GSE	Ground Support Equipment
HCE	Heater Control Electronics
HCM	Heater Control Module
HGA	High Gain Antenna
HW	Hardware
Hz	Hertz
I&T	Integration and Test
ICD	Interface Control Document
I/O	Input/Output
kHz	Kilohertz
LV	Launch Vehicle
MISR	Multi–angle Imaging Spectro–Radiometer
MODIS	Moderate Resolution Imaging Spectroradiometer
MOP	Maximum Operating Pressure
MOPITT	Measurements of Pollution in the Troposphere
MS	Margin of Safety
NA	Not Applicable

NASA	National Aeronautics and Space Administration
nc	nodal crossing
NC	Normally Closed
PDU	Power Distribution Unit
PM	Power Module
PMAD	Power Management and Distribution
PME	Propulsion Module Electronics
PPR	Prime Power Return
PRA	Pyrotechnic Relay Assembly
PMCS	Power Monitoring and Control Software
PROP	Propulsion System
P_s	Probability of Success
PSU	Power Switching Unit
PV	Photovoltaic
PWM	Pulse Width Modulation
R–DET	Regulated–Direct Energy Transfer
RTN	Return
RWA	Reaction Wheel Assembly
S/A	Solar Array
SAA	Solar Array Assembly
SAD	Solar Array Drive
SAES	Solar Array Electrical Simulator
SAPS	Solar Array Position Sensor
SCC	Spacecraft Controls Computer
SPA	Solar Panel Assembly
SPG	Single point Ground
SSU	Sequential Shunt Unit
SW	Software
TBD	To Be Determined
TBR	To Be Resolved
TBS	To Be Supplied
TCS	Thermal Control System

TLM	Telemetry
TR	Tape Recorder
Vdc	Volts Direct Current
V/T	Voltage / Temperature

6.3 Exceptions to the GIS and GIIS

None.

6.4 Requirements Traceability Matrix

Requirements in Section 3 of this specification were derived from the source documents shown in the Requirements Traceability Matrix, Attachment B, supplied under separate cover.

APPENDIX I

10 EPS COMMAND LIST

Item/Operation	Com-pon.	Function	Type	Qty	Interface
Battery COMMANDS					
Pyro bus #1 enable	BAT–1	enable	relay	1	relay driver
Pyro bus #1 disable	BAT–1	disable	relay	1	relay driver
Pyro bus #2 enable	BAT–2	enable	relay	1	relay driver
Pyro bus #2 disable	BAT–2	disable	relay	1	relay driver
PDU COMMANDS					
CSM Inhibit	PDU	inhibit	logic pulse	2	Digital RS422
CSM Enable	PDU	enable	logic pulse	2	Digital RS422
Safe Mode On	PDU	on	logic pulse	2	Digital RS422
Safe Mode Off	PDU	off	logic pulse	2	Digital RS422
Batt #1 select Pri. chg rate m of 65	BPC–1	select	16–Bit	1	serial bus
Batt #1 select Bu chg rate m of 65	BPC–1	select	16–Bit	1	serial bus
Batt #1 select Pri V/T limit k of 17	BPC–1	select	16–Bit	1	serial bus
Batt #1 select Bu V/T limit k of 17	BPC–1	select	16–Bit	1	serial bus
Batt #2 select Pri. chg rate m of 65	BPC–1	select	16–Bit	1	serial bus
Batt #2 select Bu chg rate m of 65	BPC–1	select	16–Bit	1	serial bus
Batt #2 select Pri V/T limit k of 17	BPC–1	select	16–Bit	1	serial bus
Batt #2 select Bu V/T limit k of 17	BPC–1	select	16–Bit	1	serial bus
BPC #1 enable channel A*	BPC–1	enable	logic level	1	relay contact
BPC #1 enable channel B*	BPC–1	enable	logic level	1	relay contact
BPC #1 enable channel C*	BPC–1	enable	logic level	1	relay contact
BPC #1 enable channel D*	BPC–1	enable	logic level	1	relay contact
BPC #1 disable channel A*	BPC–1	disable	logic level	1	relay contact
BPC #1 disable channel B*	BPC–1	disable	logic level	1	relay contact
BPC #1 disable channel C*	BPC–1	disable	logic level	1	relay contact
BPC #1 disable channel D*	BPC–1	disable	logic level	1	relay contact
BPC #1 trans normal	BPC–1	normal	relay	1	relay driver
BPC #1 trans increase	BPC–1	increase	relay	1	relay driver
BPC clock PRI	PDU	select	relay	1	relay driver
BPC clock BU	PDU	select	relay	1	relay driver
BPC #2 enable channel A*	BPC–1	enable	logic level	1	relay contact
BPC #2 enable channel B*	BPC–1	enable	logic level	1	relay contact
BPC #2 enable channel C*	BPC–1	enable	logic level	1	relay contact

Item/Operation	Com-pon.	Function	Type	Qty	Interface
BPC #2 enable channel D*	BPC–1	enable	logic level	1	relay contact
BPC #2 disable channel A*	BPC–1	disable	logic level	1	relay contact
BPC #2 disable channel B*	BPC–1	disable	logic level	1	relay contact
BPC #2 disable channel C*	BPC–1	disable	logic level	1	relay contact
BPC #2 disable channel D*	BPC–1	disable	logic level	1	relay contact
BPC #2 trans normal	BPC–2	normal	relay	1	relay driver
BPC #2 trans increase	BPC–2	increase	relay	1	relay driver
MODIS feed A on (off)	PDU	on/off	relay	2	relay driver
MODIS feed B on (off)	PDU	on/off	relay	2	relay driver
CERES fore feed A on (off)	PDU	on/off	relay	2	relay driver
CERES fore feed B on (off)	PDU	on/off	relay	2	relay driver
CERES aft feed A on (off)	PDU	on/off	relay	2	relay driver
CERES aft feed B on (off)	PDU	on/off	relay	2	relay driver
ASTER 1 feed A on (off)	PDU	on/off	relay	2	relay driver
ASTER 1 feed A on (off)	PDU	on/off	relay	2	relay driver
ASTER 2 feed B on (off)	PDU	on/off	relay	2	relay driver
ASTER 2 feed B on (off)	PDU	on/off	relay	2	relay driver
MOPITT feed A on (off)	PDU	on/off	relay	2	relay driver
MOPITT feed B on (off)	PDU	on/off	relay	2	relay driver
MISR feed A on (off)	PDU	on/off	relay	2	relay driver
MISR feed B on (off)	PDU	on/off	relay	2	relay driver
HGA feed A on (off)	PDU	on/off	relay	2	relay driver
HGA feed B on (off)	PDU	on/off	relay	2	relay driver
CMD decoder A on	PDU	Aon	relay	1	relay driver
CMD decoder A off	PDU	Aoff	relay	1	relay driver
CMD decoder B on	PDU	Bon	relay	1	relay driver
CMD decoder B off	PDU	Boff	relay	1	relay driver
PRI voltage ref. offset enable	PDU	set volt ref. to 118 V	relay	1	relay driver
PRI voltage ref. offset disable	PDU	set volt ref. to 120 V	relay	1	relay driver
BU voltage ref. offset enable	PDU	set volt ref. to 118 V	relay	1	relay driver
BU voltage ref. offset disable	PDU	set volt ref. to 120 V	relay	1	relay driver
ADE COMMANDS					
ADE A on / B off	ADE	A on/B off	relay	1	relay driver
ADE B on / A off	ADE	B on/A off	relay	1	relay driver

Item/Operation	Com-pon.	Function	Type	Qty	Interface
ADE A off	ADE	A off	relay	1	relay driver
ADE B off	ADE	B off	relay	1	relay driver
ADE safe hold select	ADE	sun point-ing/earth pointing	relay	4	relay driver
ADE safe hold 1 on	ADE	on	relay	1	relay driver
ADE safe hold 2 on	ADE	on	relay	1	relay driver
ADE safe hold 1 off	ADE	off	relay	1	relay driver
ADE safe hold 2 off	ADE	off	relay	1	relay driver
Side A motor on	ADE	select	relay	1	relay driver
Side A motor off	ADE	select	relay	1	relay driver
Side B motor on	ADE	select	relay	1	relay driver
Side B motor off	ADE	select	relay	1	relay driver
ADE A safe mode enab	ADE	enable	16–bit	1	serial bus
ADE B safe mode enab	ADE	enable	16–bit	1	serial bus
ADE A normal mode execute	ADE	select	16–bit	1	serial bus
ADE B normal mode execute	ADE	select	16–bit	1	serial bus
ADE A safe mode execute	ADE	execute	16–bit	1	serial bus
ADE B safe mode execute	ADE	execute	16–bit	1	serial bus
ADE A direction FWD (REV)	ADE	select	16–bit	2	serial bus
ADE B direction FWD (REV)	ADE	select	16–bit	2	serial bus
ADE A rate (0, 1, 2, 3 ω)	ADE	select	16–bit	4	serial bus
ADE B rate (0, 1, 2, 3 ω)	ADE	select	16–bit	4	serial bus
ADE A rate adjustment	ADE	select	16–Bit	256	serial bus
ADE B rate adjustment	ADE	select	16–Bit	256	serial bus
S/A deployed override	ADE	select	16–bit	1	serial bus
S/A deployed override reset	ADE	deselect	16–bit	1	serial bus
SSU/SAA COMMANDS					
DEU A enable/disable	SSU	enab/disab	relay	2	relay driver
DEU B enable/disable	SSU	enab/disab	relay	2	relay driver
Select blanket box motor	SSU	select	relay	2	relay driver
Select mast motor	SSU	select	relay	2	relay driver
Motor forward	SSU	select	relay	2	relay driver
Motor reverse	SSU	select	relay	2	relay driver
Motor start	SSU	select	relay	2	relay driver
Motor stop	SSU	select	relay	2	relay driver
End of deploym'nt limit switch override	SSU	override	relay	2	relay driver

Item/Operation	Com-pon.	Function	Type	Qty	Interface
End of deployment limit switch normal	SSU	normal	relay	2	relay driver
Mast motor inhibit override	SSU	override	relay	2	relay driver
Mast motor inhibit normal	SSU	normal	relay	2	relay driver
Pri HCE enable	SSU	enable	relay	1	relay driver
Pri HCE disable	SSU	disenable	relay	1	relay driver
Bu HCE enable	SSU	enable	relay	1	relay driver
Bu HCE disable	SSU	disenable	relay	1	relay driver
BPC COMMANDS					
BPC #1 ch A failure detector override	BPC	override	logic pulse	1	digital RS422
BPC #1 ch B failure detector override	BPC	override	logic pulse	1	digital RS422
BPC #1 ch C failure detector override	BPC	override	logic pulse	1	digital RS422
BPC #1 ch D failure detector override	BPC	override	logic pulse	1	digital RS422
BPC #2 ch A failure detector override	BPC	override	logic pulse	1	digital RS422
BPC #2 ch B failure detector override	BPC	override	logic pulse	1	digital RS422
BPC #2 ch C failure detector override	BPC	override	logic pulse	1	digital RS422
BPC #2 ch D failure detector override	BPC	override	logic pulse	1	digital RS422

APPENDIX II

20 EPS TELEMETRY LIST

TLM Item Name	Orig	Range	Type	Qty	Bits
BATTERY TELEMETRY					
Bat 1 Temperature A,B,C,D,E,F	BAT-1	-15/+50 Deg.C	Analog	6	8
Bat 2 Temperature A,B,C,D,E,F	BAT-2	-15/+50 Deg.C	Analog	6	8
Battery 1 Pyro Bus enable/disable	BAT	0/1	Status	1	1
Battery 2 Pyro Bus enable/disable	BAT	0/1	Status	1	1
Bat 1 Pressure #A,B,C,D	BAT-1	0-1600 PSI	Analog	4	8
Bat 2 Pressure #A,B,C,D	BAT-2	0-1600 PSI	Analog	4	8
SSU TELEMETRY					
SSU Temp	SSU	-15/+55 Deg C	Analog	2	8
EPC Current	SSU	0-0.5A	Analog	2	8
EPC Temp	SSU	-15/+55 Deg C	Analog	2	8
HCE Status	SSU	1/0	Status	2	1
HCE Cross-couple Status	SSU	1/0	Status	2	1
SSU Shunt Status	SSU	0-28	Serial	4	8
SSU Control Voltage	SSU	0-10 V	Analog	2	8
SAA Isc n Curr (n = 2)	SSU	0-1.0 A	Analog	2	8
SAA Voc n Volts (n = 2)	SSU	0-2.0 V	Analog	2	8
SAA Isc n Temp (n = 2)	SSU	-115/+100°C	Analog	2	8
SAA Voc n Temp (n = 2)	SSU	-115/+100°C	Analog	2	8
SAA Mast Motor Temp	SSU	-25/+70°C	Analog	2	8
SAA Mast Rate of Deploy	SSU	0-5 V	Analog	2	8
SAA Blanket Box Sep. sense	SSU	1/0	Status	2	8
SAA end of deploy sense	SSU	1/0	Status	2	8
SAA Elevation Hinge Position	SSU	0-5 V	Analog	1	8
SAA Elevation Hinge latched	SSU	1/0	Status	2	8
DEU 1(2) converter output	SSU	0-5 V	Analog	2	1
Motor Direction Status	SSU	0-5 V	Status	1	1
Select Blanket Box Separation Motor Status	SSU	0-5 V	Status	1	1
Select Mast Deployment Motor Status	SSU	0-5 V	Status	1	1
End of Deployment Limit Switch Override Status	SSU	0-5 V	Status	1	1
Mast Motor Inhibit Override Status	SSU	0-5 V	Status	1	1
ADE TELEMETRY					
ADE position	ADE	0 to 360	Analog	2	8

TLM Item Name	Orig	Range	Type	Qty	Bits
ADE Temperature A, B	ADE	-25 to +50 C	Analog	2	8
ADE Side A On/Off Status	ADE	1/0	Status	1	1
ADE Side B On/Off Status	ADE	1/0	Status	1	1
ADE Side A motor on/off	ADE	on/off	Serial	1	1
ADE Side B motor on/off	ADE	on/off	Serial	1	1
ADE side A S/A deployed	ADE	1/0	Serial	1	1
ADE side B S/A deployed	ADE	1/0	Serial	1	1
ADE side A S/A deployed override	ADE	1/0	Serial	1	1
ADE side B S/A deployed override	ADE	1/0	Serial	1	1
ADE Side A rate (0,1,2,3,ω)	ADE	0,1,2,3	Serial	1	2
ADE Side B rate (0,1,2,3,ω)	ADE	0,1,2,3	Serial	1	2
ADE Side A Direction (Fwd/Rev) RG	ADE	Fwd/Rev	Serial	1	1
ADE B Direction (Fwd/Rev) Actual	ADE	Fwd/Rev	Serial	1	1
ADE Side B Direction (Fwd/Rev) RG	ADE	Fwd/Rev	Serial	1	1
ADE Side B Direction (Fwd/Rev) Actual	ADE	Fwd/Rev	Serial	1	1
ADE Side A rate adjustment	ADE	-4.1%/+4.1%	Serial	1	9
ADE Side B rate adjustment	ADE	-4.1%/+4.1%	Serial	1	9
ADE Safe Hold 1 on/off	ADE	on/off	Serial	1	1
ADE Safe Hold 2 on/off	ADE	on/off	Serial	1	1
ADE Safe Hold 1 SA at Index	ADE	index/not	Serial	1	1
ADE Safe Hold 2 SA at Index	ADE	index/not	Serial	1	1
ADE S/H 1 Mode Execute	ADE	execute/normal	Serial	1	1
ADE S/H 2 Mode Execute	ADE	execute/normal	Serial	1	1
ADE Safe Hold 1 Mode Enable	ADE	enable/disable	Serial	1	1
ADE Safe Hold 2 Mode Enable	ADE	enable/disable	Serial	1	1
ADE Safe Hold 1 Mode Select	ADE	select	Serial	1	1
ADE Safe Hold 2 Mode Select	ADE	select	Serial	1	1
ADE Safe Hold 1 Rate	ADE	0,1.2.3	Serial	1	2
ADE Safe Hold 2 Rate	ADE	0,1,2,3	Serial	1	2
ADE ACE Safe Hold 1 Indicator	ADE	on/off	Serial	1	1
ADE ACE Safe Hold 2 Indicator	ADE	on/off	Serial	1	1
BPC TELEMETRY					
BPC #1 Temperature A.B,C,D	BPC-1	-25/60 Deg C	Analog	4	8
BPC #2 Temperature A.B,C,D	BPC-2	-25/60 Deg C	Analog	4	8
BPC #1 Status A,B,C,D	BPC-1	1/0	Discrete	4	1
BPC #2 Status A,B,C.D	BPC-2	1/0	Discrete	4	1
BPC #1 Fail Status A.B.C,D	BPC-1	1/0	Discrete	4	1

TLM Item Name	Orig	Range	Type	Qty	Bits
BPC #2 Fail Status A,B,C,D	BPC–2	1/0	Discrete	4	1
BPC #1 Override Status A,B,C,D	BPC–1	1/0	Discrete	4	1
BPC #2 Override Status A,B,C,D	BPC–2	1/0	Discrete	4	1
BPC #1 Channel Current A,B,C,D	BPC–1	0–5 V	Analog	4	8
BPC #2 Channel Current A,B,C,D	BPC–2	0–5 V	Analog	4	8
PDU TELEMETRY					
PDU temperatures	PDU	–25/60 deg. C	Analog	2	8
PDU Pri EPC Current	PDU	0–5 V	Analog	1	8
PDU Bu EPC Current	PDU	0–5 V	Analog	1	8
PDU Pri EPC Temp	PDU	–25/60 Deg C	Analog	1	8
PDU Bu EPC Temp	PDU	–25/60 Deg C	Analog	1	8
PDU CMD decoder A status	PDU	Aon/Aoff	Status	1	1
PDU CMD decoder B status	PDU	Bon/Boff	Status	1	1
Bus Voltage Full Range	PDU	0–135 V	Analog	2	8
Bus Voltage, Expanded Range	PDU	120V+/–6%	Analog	2	8
SA Load Current	PDU	0–60 A	Analog	2	8
BPC–1 Current	PDU	–15 – 15.0 A	Analog	2	8
BPC–2 Current	PDU	–15 – 15.0 A	Analog	2	8
Bat 1 Charge Current	BAT–1	0 – 25 A	Analog	1	8
Bat 2 Charge Current	BAT–2	0 – 25 A	Analog	1	8
Bat 1 Discharge Current	PDU	0 – 40 A	Analog	1	8
Bat 2 Discharge Current	PDU	0 – 40 A	Analog	1	8
Housekeeping Load Current	PDU	0–20 A	Analog	1	8
MODIS feed A status	PDU	on/off	Status	1	1
MODIS feed B status	PDU	on/off	Status	1	1
CERES fore feed A status	PDU	on/off	Status	1	1
CERES fore feed B status	PDU	on/off	Status	1	1
CERES aft feed A status	PDU	on/off	Status	1	1
CERES aft feed B status	PDU	on/off	Status	1	1
ASTER 1 feed A status	PDU	on/off	Status	1	1
ASTER 1 feed B status	PDU	on/off	Status	1	1
ASTER 2 feed A status	PDU	on/off	Status	1	1
ASTER 2 feed B status	PDU	on/off	Status	1	1
MOPITT feed A status	PDU	on/off	Status	1	1
MOPITT feed B status	PDU	on/off	Status	1	1
MISR feed A status	PDU	on/off	Status	1	1
MISR feed B status	PDU	on/off	Status	1	1

TLM Item Name	Orig	Range	Type	Qty	Bits
HGA Feed A status	PDU	on/off	Status	1	1
HGA Feed B status	PDU	on/off	Status	1	1
PRI Voltage ref. relay status	PDU	enable/disable	Status	1	1
BU Voltage ref. relay status	PDU	enable/disable	Status	1	1
MODIS feed A Current	PDU	0–10 A	Analog	1	8
MODIS feed B Current	PDU	0–10 A	Analog	1	8
CERES fore feed A Current	PDU	0–10 A	Analog	1	8
CERES fore feed B Current	PDU	0–10 A	Analog	1	8
CERES aft feed A Current	PDU	0–10 A	Analog	1	8
CERES aft feed B Current	PDU	0–10 A	Analog	1	8
ASTER 1 feed A Current	PDU	0–10 A	Analog	1	8
ASTER 1 feed B Current	PDU	0–10 A	Analog	1	8
ASTER 2 feed A Current	PDU	0–10 A	Analog	1	8
ASTER 2 feed B Current	PDU	0–10 A	Analog	1	8
MOPITT feed A Current	PDU	0–10 A	Analog	1	8
MOPITT feed B Current	PDU	0–10 A	Analog	1	8
MISR feed A Current	PDU	0–10 A	Analog	1	8
MISR feed B Current	PDU	0–10 A	Analog	1	8
Bat 1 Chg Rate Selected	PDU	0 – 5V	Analog	2	8
Bat 2 Chg Rate Selected	PDU	0 – 5V	Analog	2	8
Bat 1 V/T Curve Selected	PDU	0 – 5 V	Analog	2	8
Bat 2 V/T Curve Selected	PDU	0 – 5 V	Analog	2	8
Battery 1 Voltage	BAT	0 to +89.6 V	Analog	2	8
Battery 1 Voltage, Expanded Range	BAT	51.6 to +90. V	Analog	2	8
Battery 2 Voltage	BAT	0 to +89.6 V	Analog	2	8
Battery 2 Voltage, Expanded Range	BAT	51.6 to +90. V	Analog	2	8
Battery 1 1/2 Voltage	BAT	25.8 to +45 V	Analog	2	8
Battery 2 1/2 Voltage	BAT	25.8 to +45 V	Analog	2	8
Battery 1 Pyro Bus voltage	BAT	22 to 34.8 V	Analog	2	8
Battery 2 Pyro Bus voltage	BAT	22 to 34.8 V	Analog	2	8
Battery 1 Cell voltage A,B,C,D	BAT	0 to 1.79 V	Analog	8	8
Battery 2 Cell voltage A,B,C,D	BAT	0 to 1.79 V	Analog	8	8
BPC 1 Transconductance Status	PDU	Norm/incr	Status	1	1
BPC 2 Transconductance Status	PDU	Norm/incr	Status	1	1
Ground Fault Current	PDU	0–10 A	Analog	1	8
CSM Enable/Inhibit A Status	PDU	Enable/Inhibit	Status	1	1
CSM Enable/Inhibit B Status	PDU	Enable/Inhibit	Status	1	1

TLM Item Name	Orig	Range	Type	Qty	Bits
PMCS TELEMETRY					
Battery x Actual C D Ratio (x = 1, 2)	SCC	0–5 V	Analog	2	8
Battery x Actual State of Charge (x = 1, 2)	SCC	0–5 V	Analog	2	8
Battery x Amp–Min In (x = 1, 2)	SCC	0–5 V	Analog	2	8
Battery x Cell Temperature (x = 1, 2)	SCC	0–5 V	Analog	2	8
Battery x Full Charge Flag (x = 1, 2)	SCC	0/1	Status	2	1
Battery x Pressure (x = 1, 2)	SCC	0–5 V	Analog	2	8
Battery x Pressure State of Charge (x = 1, 2)	SCC	0–5 V	Analog	2	8
Battery x Actual Pressure Status (x = 1, 2)	SCC	0/1	Status	2	1
Battery x Actual C D Ratio (x = 1, 2)	SCC	0–5 V	Analog	2	8
Battery x Temperature (x = 1, 2)	SCC	0–5 V	Analog	2	8
Battery x Theoretical Chg Amp–Mins. (x = 1, 2)	SCC	0–5 V	Analog	2	8
Battery x Actual Dischg Amp–Mins. (x = 1, 2)	SCC	0–5 V	Analog	2	8
Battery x Trickle Charge Status–Flag (x = 1, 2)	SCC	0/1	Status	2	1
Battery x Trickle Charge Rate (x = 1, 2)	SCC	0–5 V	Analog	2	8
Battery x Actual Charge Amp–Min (x = 1, 2)	SCC	0–5 V	Analog	2	8
Battery x Variable Charge Rate (x = 1, 2)	SCC	0–5 V	Analog	2	8
Converted Current	SCC	0–5 V	Analog	2	8
Current in Amperes	SCC	0–5 V	Analog	2	8
Current Status	SCC	0/1	Status	2	1
Day Time	SCC	0–5 V	Analog	1	8
Housekeeping Overpowered Flag	SCC	0–5 V	Analog	1	8
Instrument x Load Power (x = 1...7)	SCC	0–5 V	Analog	7	8
Instrument x Overpowered Flag (x = 1...7)	SCC	0–5 V	Analog	7	8
Night Time	SCC	0–5 V	Analog	1	8
Pressure in PSI	SCC	0–5 V	Analog	8	8
Eclipse–Sun–Status	SCC	0/1	Status	1	1
Solar Array Circuit Current	SCC	0–5 V	Analog	2	8
Solar Array Current Capability	SCC	0–5 V	Analog	1	8
Solar Array Shunt Current	SCC	0–5 V	Analog	1	8
Total Housekeeping Load Power	SCC	0–5 V	Analog	1	8
Total Load Current	SCC	0–5 V	Analog	1	8
Total Load Power	SCC	0–5 V	Analog	1	8
Voltage Group	SCC	0–5 V	Analog	2	8
Voltage Readings	SCC	0–5 V	Analog	8	8
Voltage Status	SCC	0/1	Status	8	1

(This page intentionally left blank.)

PS20008636
CAGE No. 49671
06 July 1993

Performance Specification
Electrical Accommodations Subsystem (EAS)
EOS–AM Spacecraft
(SP–741)

Prepared under:
Contract NAS5–32500
NASA Goddard Space Flight Center
Greenbelt, Maryland 20771

Prepared by:
Martin Marietta Corporation
Astro Space
P.O. Box 800
Princeton, New Jersey 08543–0800

DCC070693

(This page intentionally left blank.)

REVISION LOG

This log identifies those portions of this document which have been revised since the original issue. Revised portions of each page, for the current revision only, are identified by marginal striping.

Revision	Paragraph Number(s) Affected	Rev. Date	Approval
Initial Issue		07/06/93	CM/GSR

(This page intentionally left blank.)

TABLE OF CONTENTS

SECTION / PARAGRAPH	TITLE	PAGE
1	SCOPE	1
2	APPLICABLE DOCUMENTS	3
2.1	Government Documents	3
2.1.1	NASA Documents	3
2.1.2	Military Documents	4
2.1.3	Other Government Documents	4
2.2	Non-Government Documents	4
2.2.1	Martin Marietta Astro Space Documents	4
2.2.2	Subcontractor Documents	5
2.2.3	Other Non-Government Documents	5
3	REQUIREMENTS	7
3.1	EAS Definition	7
3.1.1	System Functions	7
3.1.1.1	Electrical Interconnections	7
3.1.1.2	System Grounding	7
3.1.1.3	System Bonding	8
3.1.1.4	Initiation of Electroexplosive Devices	8
3.1.2	Interface Definition	8
3.1.2.1	Functional Interfaces	8
3.1.2.2	Software Interfaces	8
3.1.2.3	Electrical Interfaces	8
3.1.2.4	Mechanical Interfaces	11
3.1.2.5	Thermal Interfaces	11
3.1.3	Major Component List	11
3.2	Characteristics	11
3.2.1	Performance	11
3.2.1.1	DC Power Distribution	11
3.2.1.2	C&DH Data Busses	12

TABLE OF CONTENTS (Continued)

SECTION / PARAGRAPH	TITLE	PAGE
3.2.1.3	High Rate Data Links	13
3.2.1.4	Time Mark and Frequency Busses	13
3.2.1.5	Bonding	14
3.2.1.6	Grounding	14
3.2.1.7	Electroexplosive Subsystem	14
3.2.2	Operational Modes	14
3.2.2.1	EED Disabled Mode	15
3.2.2.2	EED Firing Mode	15
3.2.3	Physical Characteristics	15
3.2.3.1	Mass	15
3.2.3.2	Durability	15
3.2.3.3	Layout and Dimensions	16
3.2.3.4	Maintainability Impact on Design	16
3.2.3.5	Handling Features	16
3.2.4	Power Characteristics	16
3.2.5	Power Usage	16
3.2.6	Reliability	17
3.2.6.1	Storage Restrictions	17
3.2.6.2	Vulnerability Factors	17
3.2.6.3	Failure Tolerance	17
3.2.6.4	Failure Propagation Restrictions	17
3.2.7	Environmental Conditions	17
3.2.7.1	Storage, Integration and Test	18
3.2.7.2	Shipment	18
3.2.7.3	Launch	18
3.2.7.4	On-orbit	18
3.2.7.5	Electromagnetic Radiation	18
3.3	Design and Construction	18
3.3.1	Material, Processes, Parts, and Finishes	18
3.3.2	Nameplates and Product Marking	19

TABLE OF CONTENTS (Continued)

SECTION / PARAGRAPH	TITLE	PAGE
3.3.2.1	Identification of Individual Connectors	19
3.3.2.2	Identification of Harnesses	19
3.3.3	Workmanship	19
3.3.4	Interchangeability	19
3.3.5	Safety	19
3.3.6	Harness Design and Construction	20
3.3.6.1	Connector Selection Criteria	20
3.3.6.2	Wire Selection Criteria	20
3.3.6.3	Twisted Cables	20
3.3.6.4	Wire Termination	21
3.3.6.5	Wire Splicing	21
3.3.6.6	Fabrication Forming Board	21
3.3.6.7	Routing Design	21
3.3.6.8	Bend Radius of Harness	22
3.3.6.9	Circuit Categories	23
3.3.6.10	Wire Bundle Separation	23
3.3.6.11	Harness Handling	23
3.3.6.12	Harness Weighing	28
3.3.6.13	Cable Shielding	28
3.3.6.14	Connector Shielding	29
3.3.6.15	Charging Control	29
3.4	Documentation	29
3.4.1	Specifications	29
3.4.2	Drawings	29
3.4.3	Technical Manuals	30
3.4.4	Test plans	30
3.4.5	Procedures	30
3.4.6	Installation Instructions	30
3.4.7	Software Documentation	31
3.5	Logistics	31

TABLE OF CONTENTS (Continued)

SECTION / PARAGRAPH	TITLE	PAGE
3.5.1	Maintenance	31
3.5.2	Supply	31
3.6	Precedence	31
3.6.1	Precedence of Design Criteria	31
3.6.2	Documentation Precedence	31
3.7	Major Component Characteristics	32
3.7.1	Allocations	32
3.7.2	Flight Hardware Component Characteristics	32
3.7.2.1	Harnesses	32
3.7.2.2	Signal Reference Plane Characteristics	34
3.7.2.3	Pyrotechnic Relay Assembly Characteristics	34
3.7.3	Flight Software Component Characteristics	35
4	QUALITY ASSURANCE PROVISIONS	37
4.1	EAS Verification	37
4.1.1	Verification Phases	37
4.1.2	Verification Methods	37
4.1.3	Responsibility for Verification	37
4.1.4	Verification Conditions	37
4.2	Testing	37
4.2.1	Reliability Testing	37
4.2.2	Engineering Evaluation and Test Requirements	37
4.2.3	Acceptance testing	37
4.2.3.1	Harnesses	38
4.2.3.2	Pyrotechnic Relay Assembly	38
4.2.3.3	Electroexplosive Subsystem	39
4.2.4	Qualification testing	39
4.2.4.1	Harnesses	39
4.2.4.2	Pyrotechnic Relay Assembly	39
4.2.5	Installation Testing and Checkout	39

TABLE OF CONTENTS (Continued)

SECTION / PARAGRAPH	TITLE	PAGE
4.3	Special Verifications	39
4.4	Verification Documentation	39
5	PREPARATION FOR DELIVERY	41
6	NOTES	43
6.1	Definitions	43
6.2	Acronyms and Abbreviations	44
6.3	Exceptions to the GIS and GIIS	45
6.4	Requirements Traceability Matrix	45
6.5	Command List	45
6.6	Telemetry List	48

LIST OF FIGURES

FIGURE	TITLE	PAGE
1	EAS Functional Interface Diagram	8
2	Harness Segmentation Diagram	33

LIST OF TABLES

TABLE	TITLE	PAGE
I	EAS Functional Interfaces	9
II	Instrument Parameters	10
III	Major Components of the EAS	11
IV	Subsystem Operational Modes	15
V	Power Resource Allocation	16
VI	Circuit Categories	24
VII	EAS Equipment Allocations	27
VIII	EAS Command List	46
IX	EAS Telemetry List	48

(This page intentionally left blank.)

1 SCOPE

This specification establishes the performance, design, development, and test requirements for the Electrical Accommodations Subsystem (EAS). It also establishes the allowable parts, materials, and fabrication techniques for harnesses. These requirements are derived from the Contract End Item Specification, PS20005396, and the documents it cites.

The harnessing requirements of this specification apply to the interconnection of electrical and electronic equipment on the Spacecraft. All wiring which is completely internal to the electrical and electronic equipment is governed by the applicable equipment specification rather than this specification.

(This page intentionally left blank.)

2 APPLICABLE DOCUMENTS

The following documents of the exact issue shown, form a part of this specification to the extent specified herein. In the event of conflict between the documents referenced below and the contents of this specification, the contents of this specification shall take precedence, except as defined in Section 3.6 herein.

2.1 Government Documents

2.1.1 NASA Documents

421-10-01 30 October 1992	Requirements Document for the EOS-AM Spacecraft
420-05-02 14 May 1992	Performance Assurance Requirements for the EOS Observatories
420-03-02 1 December 1992	General Instrument Interface Specification
421–12–11–01	Unique Instrument Interface Document, ASTER
421–12–12–02	Unique Instrument Interface Document, CERES
421–12–03–02	Unique Instrument Interface Document, MISR
421–12–04–01	Unique Instrument Interface Document, MODIS
421–12–15–02	Unique Instrument Interface Document, MOPITT
NHB 5300.4 (3A-1) December 1976	Requirements for Soldered Electrical Connections, Change 1
NHB 5300.4 (3G) April 1985	Requirements for Interconnecting Cables, Harnesses, and Wiring
NHB 5300.4 (3H) May 1984	Requirements for Crimping and Wire Wrap
NHB 5300.4 (3I) May 1984	Requirements for Printed Wiring Boards
NHB 5300.4 (3J) April 1985	Requirements for Conformal Coating and Staking of Printed Wiring Boards and Electronic Assemblies
NHB 5300.4 (3K) January 1986	Requirements for Rigid Printed Wiring Boards and Assemblies

2.1.2 Military Documents

WSMCR-127-1 15 December 1989	Western Space and Missile Center Range Safety Requirements
MIL-STD-1576 31 July 1984	Military Standard, Electroexplosive Subsystem Safety Requirements and Test Methods for Space Systems
MIL-STD-1553B 21 September 1978	Military Standard, Aircraft Internal Time Division Command/Response Multiplex Data Bus

2.1.3 Other Government Documents

None

2.2 Non-Government Documents

2.2.1 Martin Marietta Astro Space Documents

PS20005396	EOS-AM Spacecraft Contract End Item Specification (SEP-101)
PS20005404	Verification Specification for the Earth Observing System (VRD-110)
IS20008501	General Interface Specification for the Earth Observing System (ICD-101)
IS20008503	Launch Vehicle Interface Requirements Document (ICD-103)
PN20005869	Electromagnetic Compatibility Control Plan (SEP-106)
20005397	Performance Assurance Implementation Plan (PA-100)
PN20001412	Contamination Control Plan for the EOS-AM Spacecraft (SEP-107)
20008648	Program Approved Parts List (PA-325)
20008650	Program Approved Materials and Processes List (PA-460)
20008652	Critical Items List (PA-510)
PN20005404	Verification Plan (VRD-100)

PN20008664 26 August 1992	Comprehensive Test Plan (VRD-105)
TP-FTE-20008636	Test Procedure, Functional Test, EAS
TP-CPTE-20008636	Test Procedure, Comprehensive Performance Test, EAS
TP-AT-20008636	Test Procedure, Aliveness Test, EAS
TP-IVT-20008636	Test Procedure, Interface Verification Test, PRA
TP20008636	Test Procedure, Harnesses
TP20008545	Test Procedure, PRA
20008536	EOS-AM Spacecraft Specification Tree
20008636	Harness Planning Diagram
20027775B	Harness Fabrication Standard
47A268520E	Harness Fabrication Requirements
20038254	Harness Installation Requirements, Mechanical
2280749K	Process Standard, Lead Forming, Component and Terminal Mounting
2280800V	Process Standard, Crimping Flight Connector Contacts
2280801P	Process Standard, In-Line Splicing of Stranded Interconnecting Wire Using Raychem Solder Sleeves
2280878AB	Process Standard, Bonding, Staking, Potting, Encapsulating
20001388	Bus Core Assembly
Source:	Martin Marietta Astro Space P. O. Box 800 Princeton, NJ 08543–0800

2.2.2 Subcontractor Documents

None

2.2.3 Other Non-Government Documents

None

(This page intentionally left blank.)

3 REQUIREMENTS

The EAS shall meet all performance requirements specified herein.

3.1 EAS Definition

3.1.1 System Functions

3.1.1.1 Electrical Interconnections

[1] The EAS shall provide the electrical interconnections of all flight equipment on the Spacecraft. It shall also provide the electrical interfaces between the Spacecraft and the launch vehicle, ground support equipment, and test equipment.

The EAS will support the following spacecraft functions:

a. 120 Vdc Primary Power Distribution

b. Low Voltage Secondary Power Distribution

c. MIL-STD-1553B Data Busses

d. Time Mark and Frequency Bus

e. High Rate Data Links

f. Discrete Logic Level Signals

g. Discrete Relay Drive Signals

h. Analog Telemetry Signals

i. Bi–level Telemetry Signals

j. Electroexplosive Device (EED) Firing Signals

k. Power Signal Returns/References

l. Fault Grounds

3.1.1.2 System Grounding

[1] The EAS shall provide a single point ground system for the Spacecraft prime power hardware. The EAS shall provide a multi–point ground system for signal reference and chassis bonding. These ground systems shall be in accordance with the Electromagnetic Compatibility Control Plan, PN20005869.

[2] The EAS shall provide a fault ground for each Equipment Module (EM) and instrument so that the maximum electrical fault current of all equipment operating from a 120 V power source can be conducted without creating a thermal or electrical hazard. This fault ground shall be returned via wire connection to the Prime Power Reference (PPR).

3.1.1.3 System Bonding

The EAS shall bond the instrument interface connector panel and the chassis of all EMs and major assemblies to the Signal Reference Plane (SRP).

3.1.1.4 Initiation of Electroexplosive Devices

The EAS shall provide the Arm and Fire functions for all EEDs used on the Spacecraft.

3.1.2 Interface Definition

3.1.2.1 Functional Interfaces

[1] The functional interfaces for the EAS shall be as depicted in Figure 1 and

[2] as listed in Table I. The subsystem modes, defined in Section 3.2.2, during which the interface is relevant, are indicated in the "Mode" column.

[3] All functions shall be implemented in hardware.

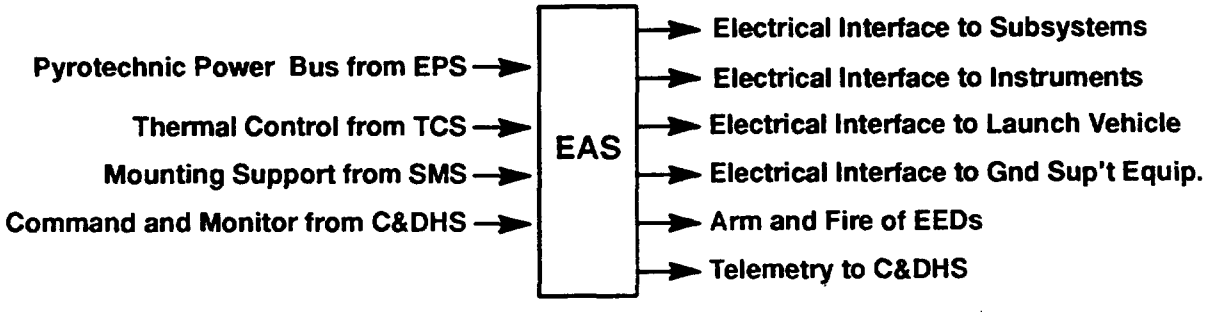

Figure 1. EAS Functional Interface Diagram

3.1.2.2 Software Interfaces

The EAS does not require any functions to be implemented in software.

3.1.2.3 Electrical Interfaces

The EAS shall comply with the requirements of the General Interface Specification, IS20008501, Section 3, and the General Instrument Interface Specification, GSFC 420-03-02, regarding power, grounds, standard signal interfaces, EEDs, test points, connectors, and connector pin allocations.

Table I. EAS Functional Interfaces

Input	Source	Activity	Output	Destination	Mode
Thermal Control	TCS	Maintain Acceptable Temps	None		All
Mounting Support	SMS	Attachment to Structure	None		All
Commands	C&DHS	Deploy Appendages/ Open Pyrovalves	Telemetry	C&DHS	EED Firing
Pyro Bus Power	EPS	Deploy Appendages/ Open Pyrovalves	EED Firing	EEDs	EED Firing
Subsystem Signals	Subsys-tems	Housekeeping Operations	Interconnec-tions	Subsys-tems	All
Instrument Signals	Instru-ments	Science Mission	Interconnec-tions	Instru-ments	All
Umbilical Signals	Launch Vehicle	Prelaunch Support	Interconnec-tions	EPS and COMS	All
Ext. Pwr and Test Signals	GSE	Electrical Testing	Interconnec-tions	Subsys-tems	Normal

3.1.2.3.1 Subsystems

[1] The EAS shall provide all electrical interconnections between the components of all subsystems and between the subsystems as required.

[2] The EAS shall provide the appropriate mating connector for each corresponding connector on all components with interconnections as listed in the component performance specification or ICD.

3.1.2.3.2 Instruments

[1] The EAS shall provide electrical interconnections between the instrument components and between the instrument components and Instrument Accommodations components as specified in the GIIS and the Unique Instrument Interface Documents (UIIDs).

[2] If the UIIDs and the GIIS conflict, the UIIDs shall govern.

[3] The EAS shall provide the appropriate mating connector for each corresponding connector on all components with interconnections as specified in the UIIDs.

For those Instruments for which a UIID has not approved, the Instrument parameters defined in Table II shall be assumed for EAS design activities. As UIIDs become approved, the below-listed parameters will be superceded, as appropriate.

Table II. Instrument Parameters

Instrument	Number of Sets of Power Interfaces	Number of High-Rate Science Data Interfaces	Number of Low-Rate Science Data Interfaces	Point-to-Point Cmd/Tlm Interface Sets	Command and Telemetry Bus Interfaces	Time Mark and Frequency Bus Interfaces
ASTER	2	4	0	2	1	1
MISR	1	1	0	1	1	1
MODIS	1	1	0	1	1	1
CERES	2	0	2	2	2	2
MOPITT	1	0	1	1	1	1

3.1.2.3.3 Launch Vehicle

[1] The EAS interfaces to the launch vehicle and to the support equipment supplied by the launch vehicle agency shall meet the requirements of the Launch Vehicle Interface Requirements Document, IS20008503.

[2] The EAS shall provide the electrical interconnections between the Command and Data Handling Subsystem (C&DHS), the Electrical Power Subsystem (EPS), and the Launch Support Equipment (LSE) so that commands, telemetry, and power may be passed between them via the launch vehicle interface when mated to the launch vehicle during the pre-launch phase of the mission.

3.1.2.3.4 Ground Support Equipment

The EAS shall provide electrical interconnections according to IS20008501, between the Spacecraft subsystems and the Ground Support Equipment (GSE) necessary to support Integration and Test (I&T) and pre-launch operations.

3.1.2.3.5 Electrical Power Subsystem

[1] The EAS shall receive primary and secondary pyrotechnic power busses from the Electrical Power Subsystem.

[2] Each bus shall be capable of delivering a minimum EED firing current of 5.0 Amps over a voltage range of 21.0 to 36.0 Volts DC with a maximum total circuit resistance of 4.2 ohms at the Battery Assembly interface.

[3] The pyrotechnic power bus shall be capable of delivering this current up to 20 times.

3.1.2.3.6 Command and Data Handling Subsystem

[1] The EAS shall receive relay drive signals from and provide redundant switch status telemetry signals to the Command and Data Handling Subsystem (C&DHS) for the PRA according to the standard interface circuits specified in IS20008501.

The commands and telemetry required by the EAS to be processed by the C&DHS are listed in sections 6.5 and 6.6, respectively.

3.1.2.4 Mechanical Interfaces

[1] The EAS shall comply with the requirements of IS20008501, Section 4, regarding coordinate systems, physical characteristics, design and construction, mounting, alignment, mechanisms, dynamic characteristics, structural criteria, and tooling.

[2] The EAS shall incorporate interfaces for external stimuli or simulators where necessary for ground testing as defined in Section 4, herein.

[3] Harness assemblies shall be secured to structure as specified in the Mechanical Harness Installation Requirements, Mechanical, 20038254.

3.1.2.5 Thermal Interfaces

The EAS shall comply with the requirements of IS20008501, Section 5, regarding thermal interfaces, environmental flux parameters, and thermal control hardware.

3.1.3 Major Component List

The major components of the EAS shall be as listed in Table III.

Table III. Major Components of the EAS

Subsystem Component	Quantity	Major Function
Spacecraft Core Harness	1	Electrical Interconnections
EM Harnesses	8	Electrical Interconnections
Instrument Harnesses	5	Electrical Interconnections
Pyrotechnic Relay Assembly (PRA)	1	Arm and Fire EEDs
Signal Reference Plane (SRP)	1	RF Signal Reference Ground

3.2 Characteristics

3.2.1 Performance

3.2.1.1 DC Power Distribution

3.2.1.1.1 Primary Power Distribution

The power loss through the Primary Power Distribution Harnesses is accounted for in the EPS efficiency factors and is not to be treated as power consumption of the EAS.

3.2.1.1.1.1 Solar Array Harness

[1] The voltage drop of the Primary Power Distribution Harness between the Sequential Shunt Unit (SSU) and the Solar Array Drive (SAD) shall not exceed 0.5 percent of the nominal voltage of 127 Volts, or 0.64 Volts. This voltage drop is measured from the output connector of the SSU to the input connector of the SAD.

[2] The voltage drop of the Primary Power Distribution Harness between the SAD and the Power Distribution Unit (PDU) shall not exceed 1.0 percent of the nominal voltage of 127 Volts, or 1.27 Volts. This voltage drop is measured from the output connector of the SAD to the input connector of the PDU.

3.2.1.1.1.2 Battery Harness

The voltage drop of the Primary Power Distribution Harness between the Battery and the Battery Power Conditioner (BPC) shall not exceed 2.0 percent of the minimum battery voltage of 53.0 Volts, or 1.06 Volts. This voltage drop is measured from the output connector of the Battery to the input connector of the BPC.

3.2.1.1.1.3 BPC Harness

The voltage drop of the Primary Power Distribution between the BPC and the PDU shall not exceed 2.0 percent of the nominal voltage of 120 Volts, or 2.40 Volts. This voltage drop is measured from the output connector of the BPC to the input connector of the PDU.

3.2.1.1.1.4 Load Harness

The voltage drop of the Primary Power Distribution Harness between the PDU and the housekeeping and instrument loads shall not exceed 2.0 percent of the nominal voltage of 120 Volts, or 2.40 Volts. This voltage drop is measured from the output connector of the PDU to the input power connector of the individual loads and includes the voltage drop through the fuses within the Fuse Distribution Boxes (FDBs).

3.2.1.1.2 Secondary Power Distribution

The power consumption of the Secondary Power Distribution harness which connects the power output of the power converters to their loads shall not exceed 2.0 percent of the nominal voltage of 28 Volts, or 0.56 Volts.

3.2.1.2 C&DH Data Busses

The C&DH data busses shall be designed with the circuit characteristics given in MIL-STD-1553B.

3.2.1.2.1 Characteristic Impedance

The data bus cable shall have a characteristic impedance of 78 ohms ±10%.

3.2.1.2.2 Stub Length

The maximum length of any stub shall be 20 feet.

3.2.1.2.3 Signal Strength Degradation

Assuming a terminal output voltage of 18.0 volts peak-to-peak, the signal strength at the terminal input shall be a minimum of 1.0 volt peak-to-peak.

3.2.1.2.4 Signal to Noise Ratio

The signal to noise ratio at the terminal input shall be a minimum of 23.5 dB.

3.2.1.2.5 Bus Termination

The data bus termination shall have a resistance of 78 ±2% ohms.

3.2.1.3 High Rate Data Links

3.2.1.3.1 Transmission Media

The high rate data links shall be transmitted via 50 ohm terminated coaxial cable pairs.

3.2.1.3.2 Cable Length

The maximum length of any high rate data link shall be 40 feet.

3.2.1.3.3 Signal Strength Degradation

Assuming a terminal output voltage of 0.6 volts peak-to-peak, the signal strength at the terminal input shall be a minimum of 0.31 volts peak-to-peak.

3.2.1.3.4 Signal to Noise Ratio

The signal to noise ratio at the terminal input shall be a minimum of 3 dB.

3.2.1.4 Time Mark and Frequency Busses

3.2.1.4.1 Characteristic Impedance

The bus cable shall have a characteristic impedance of 100 ±10% Ohms.

3.2.1.4.2 Stub Length

The maximum length of any stub shall be 20 feet.

3.2.1.4.3 Signal Strength Degradation

With a voltage of 7.5 V peak–to–peak at the output of the active driver, the signal level at any user input shall be a minimum of 0.4 V peak–to–peak.

3.2.1.5 Bonding

The EAS shall provide electrical bonding between the Spacecraft core structure and each of the EMs, Instruments, and other major Spacecraft assemblies according to the requirements of PN20005869 and IS20008501.

3.2.1.6 Grounding

The EAS shall support the distributed single point grounding system of the Spacecraft by providing power and signal returns and shield terminations as required according to the requirements of PN20005869 and IS20008501.

3.2.1.7 Electroexplosive Subsystem

The Electroexplosive Subsystem (EES), which is a sub-subsystem of the EAS, shall meet the requirements of WSMCR 127-1, MIL-STD-1576, PN20005869, and IS20008501.

3.2.1.7.1 Telemetry

The EES shall provide telemetry for monitoring redundancy status of PRA to the C&DHS.

3.2.1.7.2 Commandability

[1] The redundancy of the EES shall be configured by command from C&DHS.

[2] The EES shall be commandable to known states regardless of earlier states.

[3] EES commands which have different functionality depending on current state (e.g., "toggle" commands) shall not be permitted.

[4] No single EES command shall place the Spacecraft into a configuration from which it cannot recover.

3.2.2 Operational Modes

[1] The EAS shall perform its functions during all mission phases and in all spacecraft modes.

[2] The EAS shall have two operational modes, EED Disabled and EED Firing.

[3] The EAS operational modes shall be effective during the applicable spacecraft operating modes as shown in Table IV.

Table IV. Subsystem Operational Modes

Subsystem Mode	Spacecraft Mission Mode					
	Ground Test	Stand-By	Science	Delta-V	Survival	Safe
EED Disabled	X	X	X	X	X	X
EED Firing	X				X	

3.2.2.1 EED Disabled Mode

The EAS will normally be in EED Disabled Mode to prevent inadvertent EED firing or, after all EEDs have been fired, to disconnect the batteries from the pyrotechnic busses. During EED Disabled Mode, the pyrotechnic power busses are disabled and there are no EED firings.

3.2.2.2 EED Firing Mode

When the Spacecraft mission timeline requires EED firings, the EAS will be configured in the EED Firing Mode. The EED Firing Mode will be entered immediately upon receipt of a command to enable a pyrotechnic power bus. Then, the EEDs are armed and fired.

The EAS will exit the EED Firing Mode when the EEDs are disarmed and the pyrotechnic power busses are disabled by command.

3.2.3 Physical Characteristics

3.2.3.1 Mass

[1] The mass of the EAS shall not exceed 600 pounds.

[2] The size, weight, center-of-mass, and products of inertia estimate accuracies for the PRA shall be as defined in IS20008501, Section 4.

3.2.3.2 Durability

[1] The EAS shall be made up only of materials and components capable of withstanding the environmental conditions specified in Section 3.2.7 herein without evidence of damage as defined below.

[2] The EAS shall also be capable of withstanding, without evidence of physical damage (as defined below), any wear due to the functioning of the system.

[3] Damage shall be considered to be any change in the EAS or components which may degrade subsystem performance to levels below those specified herein.

[4] The EAS shall be capable of meeting all operational requirements as specified herein in the environments specified in Sections 3.2.7.4 and 3.2.7.5 herein, for the duration of five years in orbit.

3.2.3.3 Layout and Dimensions

The EAS layout and maximum component dimensions shall be in accordance with the component ICDs.

3.2.3.4 Maintainability Impact on Design

[1] To the extent practical, the EAS shall facilitate maintenance by being functionally and mechanically independent from all other Spacecraft elements.

[2] The EAS shall facilitate maintenance by being modular to the extent practical.

[3] The EAS shall be designed to use existing GSE, wherever practical, rather than requiring the design of new equipment.

[4] Items requiring frequent access during I&T or other prelaunch operations shall be accessible during I&T without disassembly of other equipment.

3.2.3.5 Handling Features

The EAS and/or GSE designs shall include handling features which reduce the likelihood of damage to any flight equipment.

3.2.4 Power Characteristics

The EES shall meet the performance requirements specified herein when supplied power as specified in Section 3.1.2.3.5 herein.

3.2.5 Power Usage

The EAS shall consume power at a level less than or equal to those listed in Table V. The power consumption listed in Table V is the power loss through the secondary voltage power feeds which must be included in the spacecraft loads. The power loss through the primary power distribution harness is included in the EPS efficiency.

Table V. Power Resource Allocation

Spacecraft Mode	Maximum Power (Watts)
Ground Test	2.86
Survival	3.0
Delta-V	3.0
Stand-By	3.0
Science	3.0
Safe	3.0

These powers are orbit average based on End-of-Life.

Maximum powers represent the maximum orbit average power allocation for that mode, corresponding to maximum capability.

3.2.6 Reliability

EAS component failures shall be treated as failures of the subsystem whose EAS-provided services are interrupted.

3.2.6.1 Storage Restrictions

Limited-life components which may require change-out during storage shall be identified and tracked in the Critical Items List, 20008652.

3.2.6.2 Vulnerability Factors

EAS vulnerability to damage shall be reduced by adhering to the requirements given in Section 3.3.

3.2.6.3 Failure Tolerance

[1] The EES shall be tolerant of any single, credible, hard failure including a failure in the pyrotechnic cabling.

[2] No failure shall induce any other failure.

[3] Failures in the EAS which may threaten spacecraft survival shall be detectable.

3.2.6.4 Failure Propagation Restrictions

[1] No single failure shall cause loss of a redundant functional path for any critical function.

[2] Any event causing the loss of any critical or non-critical functional path shall not result in loss of the alternate or redundant path.

[3] The EAS shall ensure that no instrument or component failures may propagate failures to other spacecraft elements.

3.2.7 Environmental Conditions

[1] The EAS components shall remain undamaged during, and

[2] following exposure to the protoflight environmental test levels corresponding to the environments defined in IS20008501, Section 6.

[3] The EAS components shall remain undamaged during, and

[4] following exposure to the acceptance environmental test levels corresponding to the environments defined in IS20008501, Section 6.

[5] Test levels shall be as defined in the Verification Specification, PS20005404.

[6] Damage shall be as defined in Section 3.2.3.2 herein.

[7] Where practical, the EAS shall not impose operational constraints due to natural environmental conditions during checkout, launch, and on-orbit conditions.

3.2.7.1 Storage, Integration and Test

The EAS shall be capable of being held for testing or storage for the period defined in IS20008501, Section 6, under the prelaunch conditions stated there for [1] thermal, [2] contamination, [3] humidity, and [4] Electromagnetic Interference (EMI), without suffering any damage as defined in Section 3.2.3.2.

3.2.7.2 Shipment

The EAS shall comply with the following transportation environmental requirements as defined in IS20008501, Section 6: [1] thermal, [2] contamination, [3] humidity, [4] EMI, [5] loads, and [6] shock.

3.2.7.3 Launch

The EAS shall comply with the following launch environmental requirements as defined in IS20008501, Section 6:[1] thermal,[2] contamination, [3] radiated RF, [4] EMI, [5] loads, [6] shock, and [7] pressure [8] acoustic vibration, [9] lightning, and [10] cosmic ray.

3.2.7.4 On-orbit

The EAS shall comply with the following on-orbit environmental requirements as defined in IS20008501, Section 6:[1] thermal,[2] contamination, [3] pressure, [4] EMI, [5] loads, [6] shock, [7] orbital debris, [8] micrometeoroids, [9] vibration, [10] charged particle, [11] atomic oxygen, [12] magnetic, and [13] Electrostatic Discharge (ESD).

3.2.7.5 Electromagnetic Radiation

[1] The EAS shall be compatible with the electromagnetic environment as specified in PN20005869.

[2] EAS components shall comply with the ionizing radiation design requirements specified in IS20008501, Section 6.

3.3 Design and Construction

3.3.1 Material, Processes, Parts, and Finishes

All materials, manufacturing processes, parts, and finishes shall be selected in accordance with IS20008501, Section 4.

3.3.2 Nameplates and Product Marking

All EAS components shall be labeled in accordance with IS20008501, Section 4.

3.3.2.1 Identification of Individual Connectors

Individual connectors shall be uniquely identified according to the guidelines stated in 20027775 to facilitate assembly, inspection, and modification of the wiring harness.

3.3.2.2 Identification of Harnesses

[1] To facilitate installation on the structure, inspection, and servicing prior to launch, each wiring harness and cable assembly shall be marked to identify part number, serial number, revision number, and equipment name.

[2] The method of identification shall ensure legibility when installed on the structure and shall not impair the functional characteristics of the wiring harness or cable assembly.

[3] Wiring harnesses and cable assemblies shall be functionally identifiable within six inches of each plug and at least every 5 meters.

3.3.3 Workmanship

Workmanship during fabrication of the EAS electrical components shall comply with the requirements of NHB 5300.4 (3A-1, G-K).

3.3.4 Interchangeability

EAS components shall be interchangeable as defined in IS20008501, Section 4.

3.3.5 Safety

[1] Measures for personnel safety shall be taken in all phases of the design, manufacturing, and testing in order to ensure personnel safety in accordance with WSMCR 127-1.

[2] The design shall meet the factors of safety given in IS20008501, Section 4.

[3] The EAS shall meet the requirements of the Safety section of the Product Assurance Implementation Plan (PAIP), 20005397.

[4] Where practical, hazards shall be eliminated or removed through appropriate design measures. Hazards which cannot be eliminated or removed shall, where practical, be prevented through incorporation and use of safety devices or features. Remaining hazards shall be controlled through the use of warning devices and/or special procedures.

[5] Automatic detection and safing of hazards which may cause personnel injury or loss of the Spacecraft shall be independent of those subsystems being monitored. Where practical, the detection and safing of lesser hazards shall also follow this practice.

[6] Items which for safety reasons may require rapid prelaunch maintenance shall be readily accessible.

[7] The EES shall incorporate arming mechanisms which allow EEDs to be armed as near to the time of expected use as feasible, and to be disarmed promptly when no longer in use.

[8] The EAS shall be designed so that an unintended change of state of one relay cannot cause an EED to fire.

3.3.6 Harness Design and Construction

3.3.6.1 Connector Selection Criteria

[1] Connectors shall mate to box connectors.

[2] Interface connectors shall be selected to provide differing shell size, insert arrangement, connector orientation, keying, and/or marking between adjacent connectors so that incorrect attachment or attachment to an inappropriate mating connector is avoided.

[3] Connectors used on the power side of the harness assembly shall have socket type contacts to reduce the risk of shorting contacts.

[4] All connectors shall have a positive lock or attachment to prevent inadvertent demating of connectors.

3.3.6.2 Wire Selection Criteria

[1] Wire size shall be chosen in accordance with the current requirements of each circuit and the derating criteria stated in 20008648.

[2] The minimum wire size used shall be 24 AWG for single-conductor unshielded copper wire and 26 AWG for twisted multi-conductor copper wire.

[3] Where 24 and 26 AWG wire is used, it shall be the high-strength type. Regular strength 24 and 26 AWG wire shall be prohibited.

[4] The minimum wire size used in any power distribution circuit shall be 22 AWG.

[5] All power shall be distributed with a minimum of two positive conductors and two return conductors unless the current carrying capacity, voltage drop, or thermal dissipation of the circuit requires additional conductors.

[6] EED signals shall be carried on 20 AWG Shielded Twisted Pair cable in accordance with MIL-STD-1576. The shield integrity shall be maintained back to the firing relay device.

3.3.6.3 Twisted Cables

[1] Twisted cable shall have the minimum twists per foot as specified in 47A268520, Harness Fabrication Requirements.

[2] Power feeds shall have a twisted configuration.

3.3.6.4 Wire Termination

[1] Each wire which terminates to a connector contact shall be terminated by soldering or crimping.

[2] Where spare wires are included in a bundle, the wire ends shall be capped with heat shrink tubing.

[3] A single connector terminal shall have only one wire connected to it.

[4] Soldering shall be performed according to the Process Standard, Lead Forming, component and Terminal Mounting, 2280749.

[5] Crimping shall be performed according to the Process Standard, Crimping Flight Connector Contacts, 2280800.

[6] Bonding, staking, and potting shall be performed according to the Process Standard, Bonding, Staking, Potting, Encapsulating, 2280878.

3.3.6.5 Wire Splicing

Splicing shall be performed according to the Process Standard, In-Line Splicing of Stranded Interconnecting Wire Using Raychem Solder Sleeves, 2280801.

3.3.6.6 Fabrication Forming Board

[1] Fabrication of all wire harnesses and cable assemblies shall be on a three dimensional jig or on a fabrication forming board that reproduces the size and shape of the harness when installed on the spacecraft.

[2] All electrical terminations shall be located with position, tilt, and index identical to the final installation.

[3] Connector shells shall be used to reproduce the mating interface.

3.3.6.7 Routing Design

[1] The harness design shall emphasize the shortest path possible, minimizing both length and weight whenever practical.

[2] Harnesses shall be segmented to facilitate manufacturing, installation, and rework.

[3] Three-dimensional harnesses shall be avoided wherever possible. A harness is considered to be three-dimensional when the assembly cannot be placed on a harness/peg board without having a portion leave the harness plane of reference in such a manner that any external force would distort the harness configuration.

[4] Harnesses shall be routed and supported such that improper mating of connectors cannot be made.

[5] Harness routing shall be designed to protect the wire from abrasions, cutting, and sharp edges and shall allow easy passage of attached connectors through structural holes and bulkheads during installation.

[6] All harnesses shall be located away from heat generating devices.

[7] The design shall provide slacks to prevent mechanical stress and strain on the wires, harness supports, and solder terminations due to servicing, vibration, and forces produced by the harness's weight.

[8] The distance between harness supports shall not exceed 18 inches.

[9] During installation of harnesses, the use of staking compound shall be kept to the minimum amount necessary.

3.3.6.8 Bend Radius of Harness

3.3.6.8.1 Wire and Cable

[1] For a single wire or a cable individually routed and supported, the minimum bend radius shall be ten times the outside diameter of the wire or cable.

[2] If a wire used as a shield terminator or jumper is required to reverse direction in the harness, the minimum bend radius of the wire shall be three times the diameter at the point of reversal, providing the wire is adequately supported.

3.3.6.8.2 Groups, Bundles, and Harnesses

[1] The minimum bend radius of a group or bundle shall be six times the outside diameter of the group or bundle.

[2] The minimum bend radius of a harness shall be six times the outside diameter of the harness unless each wire of the harness was laid to be a preformed bundle during fabrication. If every wire or bundle of the harness is preformed, then the harness bend radius shall be such that it meets the minimum bend radius requirement for each bundle within.

[3] In no case shall the bend radius of the group, bundle, or harness be less than ten times the diameter of the largest included single wire or cable.

3.3.6.8.3 Coaxial and Triaxial Cables

[1] The minimum bend radius shall not adversely affect the characteristics of the cable. For flexible type coaxial or triaxial cables, the minimum bend radius shall be six times the outside diameter of the cable.

[2] For semi-rigid type, the minimum bend radius shall be ten times the outside diameter of the cable.

3.3.6.9 Circuit Categories

[1] The category of all electrical circuits shall be determined according to the criteria given in Table VI. The category of each circuit will be listed in the appropriate component performance specification.

[2] Each signal and power circuit shall comply with the cable type and bundling requirements specified in Table VI.

[3] Where special considerations exist within the category for a particular circuit, the information contained in the wire connection list for the harness shall identify the uniqueness of the particular circuit.

3.3.6.10 Wire Bundle Separation

[1] In general, the harness shall be configured as required by the physical constraints of the spacecraft structure, by the location of the units on the structure, and by the guidelines set forth in PN20005869.

[1] Wherever possible, separate cable assemblies shall be fabricated and routed to provide physical separation of redundant signals and of signals of different categories. Where this is not possible, the bundling strategy defined in PN20005869 shall be employed.

3.3.6.11 Harness Handling

[1] Harness handling and storage shall be performed according to the guidelines in 20027775.

[2] The harness assemblies shall not be removed from their three-dimensional forming boards until all quality assurance requirements have been met.

[3] The assemblies shall then be moved from the forming boards directly to installation on the required fixture or the flight structure without intermediate storage in order to avoid unnecessary handling.

[4] Dust caps shall be installed on all unmated connectors to prevent damage to the pins and entry of foreign matter.

[5] Whenever production schedules or other considerations require harness storage, the harnesses shall be packaged, handled, and transported in a manner that minimizes possible damage or environmental degradation.

[6] When a harness assembly is removed from the forming board for storage, dust caps shall be installed on all connectors and the entire harness placed in a protective bag or box.

Unsupported handling should be avoided.

Table VI. Circuit Categories

Description	Category	Sub-Category	Characteristics	Application	Cable Rqmts	Bundle Rqmts
Power and Control	I	a	dc circuits over 10 V	1) Solar Array power from the SSU to the PDU 2) Battery power to the PDU 3) External power to the PDU 4) +120 Volt dc power distribution from the PDU to the loads 5) +28 power distribution from EPCs to loads	Category I circuits shall be carried on twisted conductor cable with an overall shield. Dc Power shall be distributed with a minimum of two positive leads and two return leads and a fault ground wire in a twisted configuration.	Category Ia signals shall be shielded as a group from other categories and routed through separate connectors. When a component has both 120V and 28V power feeds, the 28V power feeds shall be routed through separate connectors from both 120V power feeds and any other circuit category.
		b	dc circuits below 10 V and over 5 A	none identified	The current carrying capacity or the thermal dissipation	
		c	ac circuits below 0.1 MHz with voltages above 25 Vrms	none identified	of the circuit may require additional conductors.	
		d	pulse circuits with maximum voltages above 25 V with rise and fall times greater than 1 µsec	relay drive		Category Id signals shall be shielded as a group from category Ia and other categories but may be bundled with categories II and III.
		e	all power returns			

Table VI. Circuit Categories (Continued)

Description	Category	Sub-Category	Characteristics	Application	Cable Rqmts	Bundle Rqmts
High Level Signals	II	a	digital circuits with voltage levels from 5 to 25 V and rise and fall times greater than 1 µsec	none identified	Category II circuits shall be carried on shielded twisted pair cable.	Category II signals shall be shielded as a group from other categories.
		b	digital circuits with voltage levels from 1 to 10 V and rise or fall times less than 1 µsec	1) logic level commands 2) serial I/O 3) active bi-level telemetry 4) Time Mark & Frequency Bus	Time Mark & Frequency Bus signals shall be carried on 100Ω double-shielded twinax cable.	
		c	ac circuits below 0.1 MHz with voltage levels from 5 to 25 V	none identified		
		d	ac circuits between 0.1 and 1.0 MHz with voltage levels from 1 to 10 V	none identified		
Low Level Signals	III	a	dc circuits below 10 V and less than 5 A	1) active analog telemetry 2) passive analog telemetry 3) passive bi-level telemetry	Category IIIa circuits shall be carried on twisted pair cable.	Category IIIa circuits shall be shielded as a group from Category IIIb and other categories.
		b	ac circuits between 0.1 and 1.0 MHz with voltage levels less than 1 V	none identified	Category IIIb circuits shall be carried on shielded twisted pair cable.	
		c	ac circuits below 0.1 MHz with voltage levels less than 5 V	none identified	Category IIIc circuits shall be carried on twisted pair cable.	Category IIIc circuits shall be shielded as a group from Category IIIa, IIIb, and other categories

Table VI. Circuit Categories

Description	Category	Sub-Category	Characteristics	Application	Cable Rqmts	Bundle Rqmts
		d	digital circuits with voltage levels less than 1 V and rise or fall times less than 1 µsec	high rate data links	Category IIId circuits shall be carried on double–shielded twin ax cable or coaxial cable.	Category IIId circuits shall be shielded as a group from Category III subcategories and other categories.
		e	digital circuits with voltage levels less than 5 V and rise and fall times greater than 1 µsec	none identified		
Electro-Explosive Device Signals	IV		all EED circuits	all EED firing lines	Category IV circuits shall be carried on 20 AWG shielded twisted pair cable. The shield integrity shall be maintained back to the firing relay device.	Category IV circuits shall be physically segregated from all other signal categories.
High Frequency Signals	V	a	all ac circuits above 1 MHz	1) Ku-, S- and X-band	Category Va circuits shall be carried on coaxial cable.	None
		b	high level digital circuits with voltage levels above 10 V and with rise or fall times less than 1 µsec	MIL-STD-1553B data busses	Category Vb circuits shall be carried on triple–shielded twin ax cable.	None
		c	ac circuits between 0.1 and 1.0 MHz with voltage levels above 10 V	None identified.		

Table VII. EAS Equipment Allocations

Component	Qty	Size (LxWxH) (Inches)	Mass (Lb)		Power (Watts)
			Per Unit	Total	Science
Spacecraft Core Harness					
DC Power Distribution Harness	1	NA	47.3	47.3	0.1
C&DH Data Busses	1	NA	23.1	23.1	0
High Rate Data Links	1	NA	9.9	9.9	0
Pyrotechnic Cable Assemblies	1	NA	6.6	6.6	0
C&DH Discrete Wiring	1	NA	41.6	41.6	0
EM Harnesses					
Power EM Power Harness	1	NA	58.0	58.0	0
Power EM C&DH Harness	1	NA	44.4	44.4	0
Recorder EM Power Harness	1	NA	13.3	13.3	0.1
Recorder EM C&DH Harness	1	NA	55.3	55.3	0
Comm/C&DH EM Power Harness	1	NA	12.0	12.0	0.1
Comm/C&DH EM C&DH Harness	1	NA	35.0	35.0	0
DAS Panel Harness	1	NA	10.8	10.8	0
GN&C Sensor EM Power Harness	1	NA	10.2	10.2	0.3
GN&C Sensor EM C&DH Harness	1	NA	26.8	26.8	0
RWA EM Power Harness	1	NA	5.5	5.5	0
RWA EM C&DH Harness	1	NA	40.4	40.4	0
Solar Array Boom Power Harness	1	NA	5.3	5.3	0.1
Solar Array Boom C&DH Harness	1	NA	1.0	1.0	0
HGA Boom Power Harness	1	NA	1.1	1.1	0
HGA Boom C&DH Harness	1	NA	2.0	2.0	0
Propulsion Module Power Harness	1	NA	19.6	19.6	0.3
Propulsion Module C&DH Harness	1	NA	16.7	16.7	0
Interface Connector Panel	5	Various	0.5	2.5	0
Signal Reference Plane	1	NA	11.0	11.0	0
Pyrotechnic Relay Assembly	1	10x9x7	10.8	10.8	0

Table VII. EAS Equipment Allocations (Continued)

Component	Qty	Size (LxWxH) (Inches)	Mass (Lb)		Power (Watts)
			Per Unit	Total	Science
Instrument Harnesses					
ASTER Power Harness	1	NA	13.8	13.8	0
ASTER C&DH Harness	1	NA	30.9	30.9	0
ASTER Intra–Instr. Power Harness	1	NA	4.3	4.3	0
ASTER C&DH Intra–Instr. C&DH Harness	1	NA	7.7	7.7	0
CERES Power Harness	1	NA	1.5	1.5	0
CERES C&DH Harness	1	NA	5.6	5.6	0
MISR Power Harness	1	NA	0.8	0.8	0
MISR C&DH Harness	1	NA	4.0	4.0	0
MODIS Power Harness	1	NA	1.1	1.1	0
MODIS C&DH Harness	1	NA	5.2	5.2	0
MOPITT Power Harness	1	NA	3.5	3.5	0
MOPITT C&DH Harness	1	NA	9.4	9.4	0
Undistributed Allocation				2.0	2.1
Spacecraft Total				600.0	3.0

3.3.6.12 Harness Weighing

[1] The completed and tested harness assemblies and their forming boards shall be weighed as assemblies.

[2] The forming boards shall then be weighed separately after the harnesses are removed for delivery to the spacecraft.

3.3.6.13 Cable Shielding

[1] Cables and harness assemblies shall be shielded according to the requirements given in Table VI.

[2] The overall shields of all harness assemblies shall be 360–degree bonded to the connector shell at each end.

3.3.6.14 Connector Shielding

Connectors shall be shielded according to the requirements of PN20005869.

3.3.6.15 Charging Control

The particle-induced charging of harness assembly materials which are exposed to the external environment shall be controlled according to the requirements of PN20005869.

3.4 Documentation

3.4.1 Specifications

All parent and component specifications associated with this specification are shown in the EOS-AM Spacecraft Specification Tree, 20008536.

3.4.2 Drawings

All wire harness documents shall be listed on the Harness Planning Diagram, 20008636.

Each harness assembly shall have a configuration-controlled harness fabrication board or top assembly drawing, parts list, and wire connection list (WCL) as necessary, and shall be represented on an interface control drawing or installation drawing. Additionally, photographs of all mock-up harnesses shall be taken in order to fully document the harness mock-up configuration.

Each WCL shall include, as a minimum, the following information:

a. Connector/Pin Designator.

   The source and destination of the signal shall be identified mnemonically and shall not be modified without the concurrence of the Engineering Program Manager.

b. Signal Name.

   Each signal shall be uniquely identified by name. This name shall not be modified without the concurrence of the Engineering Program Manager.

c. Signal Category.

   The signal category, as listed in the component performance specification, shall be identified.

d. Wire Type.

   The wire type (part number) used for the signal shall be identified.

e. Shield Termination.

   Shields of shielded wires shall be identified in the WCL and shall be identified whether the shield is connected to ground at a connector or terminated in the harness bundle.

f. Routing Information.

Routing information shall be included by a direct call out or by a reference to a harness ICD, assembly drawing, or mock-up photographs.

g. Special Cabling.

The WCL shall refer to the Harness Fabrication Standard, 20027775, for special construction requirements of any special cabling within the harness.

h. Splicing Information.

For splices, other than a one-to-one splice to a connector flying lead, the wires common to each splice shall be identified. The WCL shall refer to 20027775 for specific manufacturing information concerning usage and fabrication of such splices.

i. Reversed Identification.

The Signal Receiver shall be provided for each signal.

3.4.3 Technical Manuals

None

3.4.4 Test plans

Subsystem-level test plans shall be included in PN20008664, Comprehensive Test Plan. Section 4 of this specification includes the test plans for component-level testing of harnesses and the PRAs.

3.4.5 Procedures

The following detailed test procedures shall be generated to implement the test plans described above.

a. TP-FTE-20008636	Test Procedure, Functional Test, EAS
b. TP-CPTE-20008636	Test Procedure, Comprehensive Performance Test, EAS
c. TP-AT-20008636	Test Procedure, Aliveness Test, EAS
d. TP-IVT-20008545	Test Procedure, Interface Verification Test, PRA
e. TP20008545	Test Procedure, Pyrotechnic Relay Assembly
f. TP20008636	Test Procedure, Harness Assemblies

3.4.6 Installation Instructions

Installation of EAS components shall be governed by the following document:

20038254	Harness Installation Requirements, Mechanical

3.4.7 Software Documentation

Not applicable.

3.5 Logistics

3.5.1 Maintenance

The EAS shall be designed to require no maintenance after testing other than that required during long periods of storage as specified in Section 3.2.7.1 herein.

3.5.2 Supply

Not applicable.

3.6 Precedence

3.6.1 Precedence of Design Criteria

EAS design decisions shall be made to accommodate the following design criteria in the following order of precedence:

a. Safety

b. Performance

c. Reliability

d. Cost

3.6.2 Documentation Precedence

If conflicts arise between documents, the EAS shall adhere to design requirements as stated in the document nearest the top of the following list of requirement documents. The General Interface Specification (GIS) is applicable to the EAS design only as invoked herein and is therefore not included in the following list:

a. Requirements Document (RD)

b. Performance Assurance Requirements (PAR)

c. Unique Instrument Interface Documents (UIIDs)

d. General Instrument Interface Specification (GIIS)

e. Contract End Item (CEI) Specification

f. External Interface Control Documents (ICDs)

g. Subsystem and Major Assembly Specifications

h. Component Specifications

3.7 Major Component Characteristics

3.7.1 Allocations

The EAS components shall be designed to levels at or below the allocations shown in Table VII.

3.7.2 Flight Hardware Component Characteristics

3.7.2.1 Harnesses

3.7.2.1.1 Functional Requirements

[1] The EAS harnesses shall be segmented into a number of different assemblies as shown in Figure 2 in order to satisfy design, manufacturing, and handling requirements.

[2] The EAS harnesses shall consist of all the interconnection wire, cable, connectors, connector brackets, splices, fastening devices (including tie-down cleats, cable clamps, lacing cord, and staking compound), and ground blocks. Specifically excluded are box ground straps, S- and Ku-band coaxial cabling, and waveguide connections.

3.7.2.1.1.1 Spacecraft Core Harness

[1] The Spacecraft Core Harness shall provide all electrical interconnections between and among EMs, instruments, the launch vehicle interface, and all core-mounted equipment.

[2] The Spacecraft Core Harness shall typically provide the following interconnection functions:

a. 120 Vdc Primary Power Distribution

b. Low Voltage Secondary Power Distribution (typically +28 Vdc)

c. Command and Telemetry Data Busses

d. Low Rate Science Data Busses

e. Time Mark and Frequency Busses

f. High Rate Data Links

g. Discrete Signal Wiring

h. Pyrotechnic Cabling

i. Fault Grounds

These harness assemblies are mounted to the truss structure.

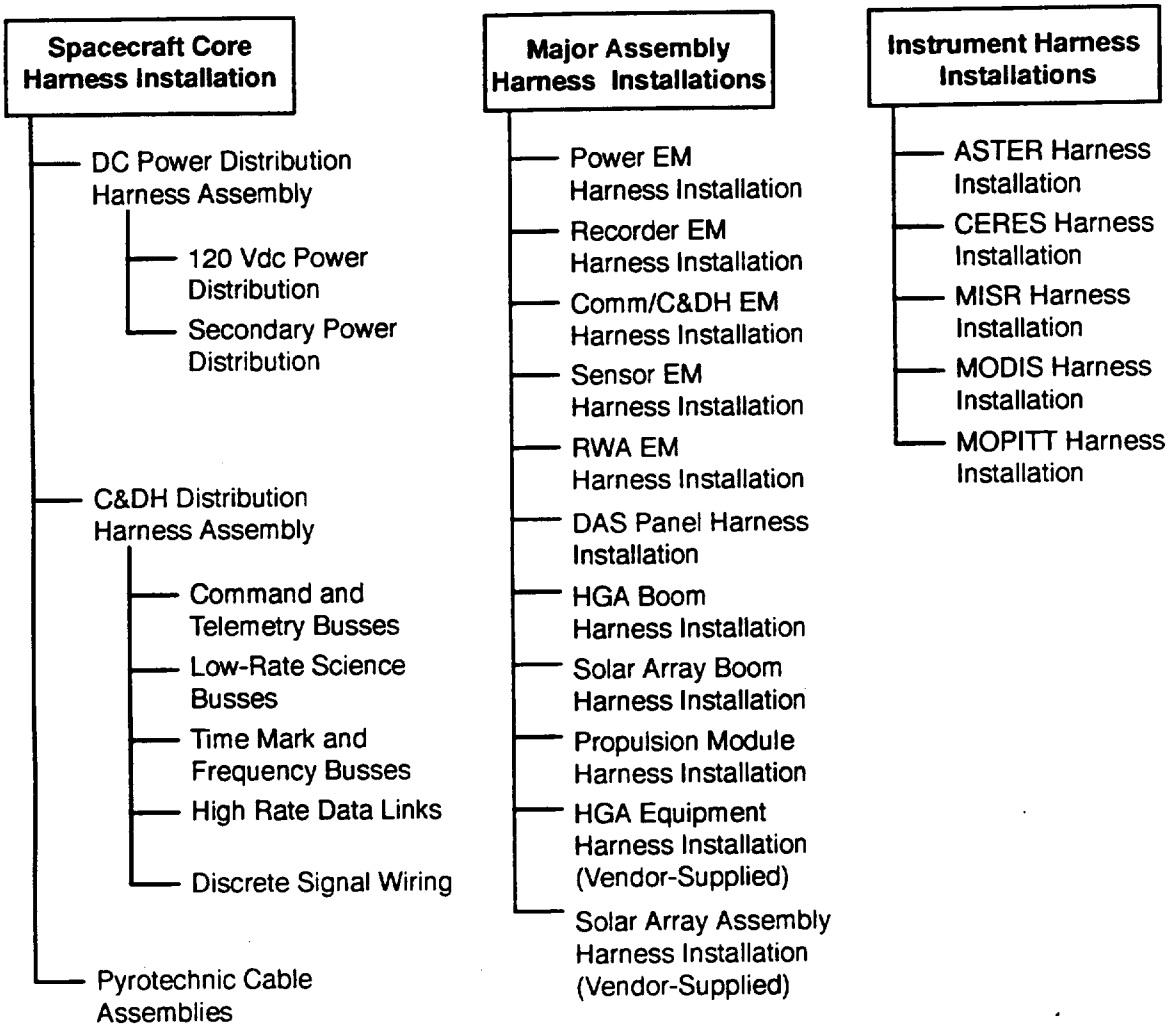

Figure 2. Harness Segmentation Diagram

3.7.2.1.1.2 Equipment Module Harnesses

[1] EM harnesses shall provide all intra- and inter-subsystem electrical interconnections between and among separately-packaged components within each of the EMs.

[2] EM Harnesses shall interface to the Spacecraft Core Harness via an Interface Connector Panel (ICP).

[3] The Interface Connector Panels shall be designed to maintain the shielding performance of the EM structure, as required by PN20008569, while providing the ability to easily remove and install EMs during I&T.

3.7.2.1.1.3 Instrument Harnesses

[1] Instrument harnesses shall provide all electrical interconnections between and among separately-packaged components associated with a given instrument. This includes the instrument accommodations equipment as well as the instrument itself.

[2] Instrument harnesses shall interface to the spacecraft core harness via an ICP.

3.7.2.1.2 Interface Requirements

The mechanical interface of the harnesses to the next higher assembly shall be documented on its fabrication forming board and by photographs of the mock–up harness in its final state on the structure mock–up.

3.7.2.2 Signal Reference Plane Characteristics

3.7.2.2.1 Functional Requirements

[1] The SRP shall provide a large surface area metallic plane which shall be the RF signal reference ground and shield ground for the Spacecraft.

[2] The SRP shall have a maximum impedance as specified in PN20005869.

3.7.2.2.2 Interface Requirements

[1] The SRP shall be bonded to the node fittings, each instrument ICD, each EM ICP, and the PPR with a maximum DC resistance as specified in PN20005869.

[2] The interface of the SRP to the primary structure shall be documented on the Bus Core Assembly Drawing, ICD20001388.

3.7.2.3 Pyrotechnic Relay Assembly Characteristics

3.7.2.3.1 Functional Requirements

[1] The PRA shall provide relays which pass firing current to each of the Primary and Secondary EEDs.

[2] The PRA shall provide a latching relay for the Arm/Disarm function in series with a non-latching relay for the Fire function for each EED.

3.7.2.3.1.1 Number of Circuits

The PRA shall contain firing circuits for 16 primary and 16 secondary EEDs.

3.7.2.3.1.2 Redundancy

[1] The PRA shall contain the firing circuits for the primary and secondary EED of a given pyrotechnic mechanism.

[2] The primary and secondary EED firing circuits shall be armed by separate ground commands.

3.7.2.3.1.3 Relay Orientation

The Arm/Disarm and Fire relays shall be mounted in perpendicular axes to each other.

3.7.2.3.2 Interface Requirements

The PRA shall be mounted to the primary structure as shown on Bus Core Assembly Drawing, 20001388.

3.7.2.3.2.1 Commands and Telemetry

[1] The PRA shall respond to the commands required to establish the configuration of the unit and to initiate the EEDs.

[2] The PRA shall provide redundant telemetry signals indicating the position of the Arm/Disarm relays. These signals shall conform to the standard interface circuits given in IS20008501.

3.7.2.3.2.2 Firing Output Signal

[1] The firing output signals shall be routed through a separate connector, segregating those signals from other types of signals.

[2] The primary and secondary firing output signals shall be routed through a separate connector, segregating the redundant signals from each other.

[3] Each interface connector shall be capable of 360 degree bonding of the overall cable shield to the connector shell.

[4] Each firing output and its return shall be to assigned to adjacent pins on the output connector to facilitate twisted pair cables.

3.7.3 Flight Software Component Characteristics

There are no EAS requirements allocated to software.

(This page intentionally left blank.)

4 QUALITY ASSURANCE PROVISIONS

The requirements for the formal verification of the performance, design, and construction of the EAS shall be as specified in this section. These requirements define the extent to which the EAS must demonstrate capability to meet the design and performance requirements specified in sections 3.2 and 3.3 of this document.

4.1 EAS Verification

Verification of each Section 3.2 and 3.3 requirement shall be performed as defined in the Verification Matrix, Attachment A (provided under separate cover).

4.1.1 Verification Phases

Phases shall be either Acceptance or Qualification as defined in PS20005404.

4.1.2 Verification Methods

The following methods shall be used as specified in VM20008636 to verify each of the requirements in Sections 3.2 and 3.3: Demonstration, Test, Analysis, and/or Inspection. Each method shall be as defined in PS20005404.

4.1.3 Responsibility for Verification

Astro Space shall verify each requirement specified in Sections 3.2 and 3.3 of this document.

4.1.4 Verification Conditions

Ambient test conditions shall be per Table V of PS20005404. Test tolerances shall be per Table VI of PS20005404.

4.2 Testing

4.2.1 Reliability Testing

Not applicable.

4.2.2 Engineering Evaluation and Test Requirements

Not applicable.

4.2.3 Acceptance testing

Acceptance testing shall be performed on all flight articles to verify workmanship and functionality.

4.2.3.1 Harnesses

Each harness assembly delivered for acceptance shall have received, as a minimum, the following tests in the order listed in the following subsections.

4.2.3.1.1 Contact Retention Test

Each rear insertable removable crimp contact (pin or socket) of the harness connectors shall be subjected to a retention push test following insertion of the contact in the connector insert in accordance with the Harness Fabrication Standard, 20027775.

4.2.3.1.2 Circuit Resistance Test

The continuity of each conductor and of each shield in the harness assembly shall be determined by measuring the circuit resistance with an automatic testing machine.

The shell-to-shell continuity of each connector of a harness assembly shall be verified by measuring the resistance between each connector shell and every other connector shell. The measured resistance shall be less than 1.0 ohm.

4.2.3.1.3 High Potential Withstanding and Insulation Resistance Test

The insulation resistance shall be measured between each conductor and every other conductor, between each conductor and every conductor shield, and between each conductor and the conductor shell. The test shall be performed at a minimum potential of 500±50 Volts dc applied for a minimum of 100 milliseconds and a maximum of 2 seconds. The measured resistance shall be greater than 100 megohms. A lesser test time may be used if the measured insulation resistance exceeds 100 megohms immediately following application of the test voltage and continues to rise.

Concurrent with the insulation resistance test, a high potential withstanding test shall be performed. Coaxial cables are excluded from the high potential withstanding test. The potential applied shall be a minimum of 1400 Volts dc. This potential shall be applied for a minimum of 2 seconds and a maximum of 3 seconds. When the potential is applied, there shall be no electrical breakdown or arc-over.

4.2.3.1.4 Harness Bake-Out

Each harness assembly shall be subjected to a thermal vacuum bake-out in accordance with the requirements specified in the Contamination Control Plan, PN20001412.

4.2.3.1.5 Environmental Test

Thermal vacuum, vibration, acoustic, shock, and EMI test requirements of harness assemblies shall be performed in conjunction with the major assembly and spacecraft environmental tests.

4.2.3.2 Pyrotechnic Relay Assembly

Acceptance testing shall be performed on the second and subsequent units at the test levels defined in PS20005404, Section 4.

4.2.3.3 Electroexplosive Subsystem

The complete EES shall be tested end-to-end at the spacecraft level as part of the Pyro Shock Test defined in the Comprehensive Test Plan, PN20008664.

4.2.4 Qualification testing

4.2.4.1 Harnesses

Qualification of harness assemblies shall be satisfied by the protoflight qualification of higher levels of assembly that include the harness.

4.2.4.2 Pyrotechnic Relay Assembly

Qualification testing of the PRA shall be performed on the first flight unit at the protoflight test levels defined in PS20005404, Section 4.

4.2.5 Installation Testing and Checkout

The shield integrity of pyrotechnic cables from the firing relay device to the EED shall be verified by test.

Grounding and bonding shall be verified by test after harness assemblies have been installed in the next higher assembly.

4.3 Special Verifications

Any EAS units identified on the limited-life or critical items lists shall be tested in accordance with the Verification Plan, PN20005404.

4.4 Verification Documentation

The subsystem verification activities shall be documented in verification reports, test procedures, test logs, and Test Review Board meeting minutes as defined in PS20005404.

(This page intentionally left blank.)

5 PREPARATION FOR DELIVERY

The EAS equipments shall be handled, packaged, and transported in accordance with the requirements given in the Performance Assurance Implementation Plan, 20005397.

Delivery shall entail a minimum of handling. Gloves shall be worn in accordance with Section 8 of the Contamination Control Plan, PN20001412, when handling is required.

(This page intentionally left blank.)

6 NOTES

6.1 Definitions

Bond	A fixed union between two objects that result in electrical conductivity between the objects. Such union occurs either from physical contact between conductive surfaces of the objects, or from the addition of a firm electrical connection between the objects.
Cable	(1) Two or more insulated conductors, solid or stranded, of equal length, contained in a common covering, or (2) two or more insulated conductors, of equal length, twisted or molded together without a common covering, or (3) one insulated conductor with a metallic covering shield or outer conductor (shielded cable or coaxial cable).
Cable Assembly	A cable with all conductors and shields insulated and terminated to connectors, terminal lugs, or other suitable devices.
Electroexplosive Device	The electroexplosive device is the first device in an arrangement of a series of explosive elements which is designed to transform an electrical input into an explosive reaction. An electrical initiator is an example of an EED.
Electroexplosive Subsystem	The electroexplosive subsystem includes all components from the power source to, and including, the EED. Safe and Arm plugs, relays, and all electrical wiring used to monitor, arm, and fire ordnance functions are specifically included.
Harness Assembly	A group of wires, shields, cables, or cable assemblies, or any combination of these, all insulated and insulated and properly terminated to connectors, terminal lugs, or other suitable devices and mechanically held together by ties, straps, clamps, insulating jacket, or other means so that it can be installed as a single unit for the interconnection of two or more electrical or electronic equipments.
Prime Power Reference	The ground block on the vehicle structure to which the negative or neutral of the EPS is connected.
Shield	A metallic sheath surrounding one or more wires, cables, cable assemblies, or a combination of wires and cables that is used to prevent or reduce the transmission of electromagnetic energy to or from the enclosed conductors. For this specification, the shield also includes an insulating jacket that covers the metallic sheath.

Signal Reference Plane	A large surface area metal plane which provides a low impedance reference ground.
Wire	A single metallic conductor of solid or stranded construction, designed to carry current in an electric circuit but which does not have a metallic covering, sheath, or shield. For this specification, "wire" refers to "insulated electric wire."

6.2 Acronyms and Abbreviations

ac	alternating current
AWG	American Wire Gauge
C	Celsius
C&DHS	Command and Data Handling Subsystem
CEIS	Contract End Item Specification
dc	direct current
dB	decibel
EAS	Electrical Accommodations Subsystem
EED	Electroexplosive Device
EEE	Electrical, Electronic, and Electromechanical
EES	Electroexplosive Subsystem
EM	Equipment Module
EMC	Electromagnetic Compatibility
EMI	Electromagnetic Interference
EOL	End of Life
EOS	Earth Observing System
EPS	Electrical Power Subsystem
ESD	Electrostatic Discharge
FDB	Fuse Distribution Box
GIIS	General Instrument Interface Specification
GIS	General Interface Specification
GSE	Ground Support Equipment
HGA	High Gain Antenna
I&T	Integration and Test
ICD	Interface Control Document

LSE	Launch Support Equipment
MHz	Megahertz
NA	Not Applicable
NASA	National Aeronautics and Space Administration
PAIP	Product Assurance Implementation Plan
PAR	Product Assurance Requirements
PDU	Power Distribution Unit
PPR	Prime Power Reference
PRA	Pyrotechnic Relay Assembly
RF	Radio Frequency
SAD	Solar Array Drive
SMS	Structures and Mechanisms Subsystem
SOW	Statement of Work
SRP	Signal Reference Plane
SSU	Sequential Shunt Unit
TBD	To Be Determined
TBR	To Be Reviewed
TBS	To Be Supplied
TCS	Thermal Control Subsystem
UIID	Unique Instrument Interface Document
V	Volts
VS	Verification Specification
WCL	Wire Connection List

6.3 Exceptions to the GIS and GIIS

None

6.4 Requirements Traceability Matrix

Requirements in Section 3 of this specification were derived from the source documents shown in Figure 3 of the Requirements Traceability Matrix, Attachment B (provided under separate cover).

6.5 Command List

The EAS command list is shown in Table VIII.

Table VIII. EAS Command List

Component	Function	Signal Type
BAT 1	Enable Primary Pyro Bus	RD
BAT 1	Disable Primary Pyro Bus	RD
BAT 2	Enable Secondary Pyro Bus	RD
BAT 2	Disable Secondary Pyro Bus	RD
PRA	Arm SA EED 1A	RD
PRA	Disarm SA EED 1A	RD
PRA	Fire SA EED 1A	RD
PRA	Arm SA EED 1B	RD
PRA	Disarm SA EED 1B	RD
PRA	Fire SA EED 1B	RD
PRA	Arm SA EED 2A	RD
PRA	Disarm SA EED 2A	RD
PRA	Fire SA EED 2A	RD
PRA	Arm SA EED 2B	RD
PRA	Disarm SA EED 2B	RD
PRA	Fire SA EED 2B	RD
PRA	Arm SA EED 3A	RD
PRA	Disarm SA EED 3A	RD
PRA	Fire SA EED 3A	RD
PRA	Arm SA EED 3B	RD
PRA	Disarm SA EED 3B	RD
PRA	Fire SA EED 3B	RD
PRA	Arm SA EED 4A	RD
PRA	Disarm SA EED 4A	RD
PRA	Fire SA EED 4A	RD
PRA	Arm SA EED 4B	RD
PRA	Disarm SA EED 4B	RD
PRA	Fire SA EED 4B	RD
PRA	Arm SA EED 5A	RD
PRA	Disarm SA EED 5A	RD

Table VIII. EAS Command List (Continued)

Component	Function	Signal Type
PRA	Fire SA EED 5A	RD
PRA	Arm SA EED 5B	RD
PRA	Disarm SA EED 5B	RD
PRA	Fire SA EED 5B	RD
PRA	Arm SA EED 6A	RD
PRA	Disarm SA EED 6A	RD
PRA	Fire SA EED 6A	RD
PRA	Arm SA EED 6B	RD
PRA	Disarm SA EED 6B	RD
PRA	Fire SA EED 6B	RD
PRA	Arm HGA EED 1A	RD
PRA	Disarm HGA EED 1A	RD
PRA	Fire HGA EED 1A	RD
PRA	Arm HGA EED 1B	RD
PRA	Disarm HGA EED 1B	RD
PRA	Fire HGA EED 1B	RD
PRA	Arm HGA EED 2A	RD
PRA	Disarm HGA EED 2A	RD
PRA	Fire HGA EED 2A	RD
PRA	Arm HGA EED 2B	RD
PRA	Disarm HGA EED 2B	RD
PRA	Fire HGA EED 2B	RD
PRA	Arm HGA EED 3A	RD
PRA	Disarm HGA EED 3A	RD
PRA	Fire HGA EED 3A	RD
PRA	Arm HGA EED 3B	RD
PRA	Disarm HGA EED 3B	RD
PRA	Fire HGA EED 3B	RD
PRA	Arm HGA EED 4A	RD
PRA	Disarm HGA EED 4A	RD

Table VIII. EAS Command List (Continued)

Component	Function	Signal Type
PRA	Fire HGA EED 4A	RD
PRA	Arm HGA EED 4B	RD
PRA	Disarm HGA EED 4B	RD
PRA	Fire HGA EED 4B	RD
PRA	Arm HGA EED 5A	RD
PRA	Disarm HGA EED 5A	RD
PRA	Fire HGA EED 5A	RD
PRA	Arm HGA EED 5B	RD
PRA	Disarm HGA EED 5B	RD
PRA	Fire HGA EED 5B	RD

Signal Type: RD - Relay Drive

6.6 Telemetry List

Each telemetry point listed in Table IX is provided to the C&DHS via redundant signals.

Table IX. EAS Telemetry List

Component	Function	Signal Type	Bits
BAT 1	Primary Pyrotechnic Bus Enabled/Disabled	D	1
BAT 2	Secondary Pyrotechnic Bus Enabled/Disabled	D	1
PRA	SA EED 1A Arm/Disarm	D	1
PRA	SA EED 1B Arm/Disarm	D	1
PRA	SA EED 2A Arm/Disarm	D	1
PRA	SA EED 2B Arm/Disarm	D	1
PRA	SA EED 3A Arm/Disarm	D	1
PRA	SA EED 3B Arm/Disarm	D	1
PRA	SA EED 4A Arm/Disarm	D	1
PRA	SA EED 4B Arm/Disarm	D	1
PRA	SA EED 5A Arm/Disarm	D	1
PRA	SA EED 5B Arm/Disarm	D	1
PRA	SA EED 6A Arm/Disarm	D	1

Table IX. EAS Telemetry List (Continued)

Component	Function	Signal Type	Bits
PRA	SA EED 6B Arm/Disarm	D	1
PRA	HGA EED 1A Arm/Disarm	D	1
PRA	HGA EED 1B Arm/Disarm	D	1
PRA	HGA EED 2A Arm/Disarm	D	1
PRA	HGA EED 2B Arm/Disarm	D	1
PRA	HGA EED 3A Arm/Disarm	D	1
PRA	HGA EED 3B Arm/Disarm	D	1
PRA	HGA EED 4A Arm/Disarm	D	1
PRA	HGA EED 4B Arm/Disarm	D	1
PRA	HGA EED 5A Arm/Disarm	D	1
PRA	HGA EED 5B Arm/Disarm	D	1

Signal Type: D - Digital Discrete

Critical Item Development Specification
High Gain Antenna Assembly
for EOS–AM Spacecraft
(SP–871)

0

PS20008513
CAGE No. 49671
16 October 1992

Critical Item Development Specification High Gain Antenna Assembly for EOS–AM Spacecraft (SP–861)

Prepared under:
Contract NAS5–32500
NASA Goddard Space Flight Center
Greenbelt, Maryland 20771

Prepared by:
General Electric Company
Astro–Space Division
P.O. Box 800
Princeton, New Jersey 08543–0800

DCC1103

(This page intentionally left blank.)

REVISION LOG

This log identifies those portions of this document which have been revised since the original issue Revised portions of each page, for the current revision only, are identified by marginal striping.

Revision	Paragraph Number(s) Affected	Rev. Date	Approval
Initial Issue		10/29/92	CM/GSR

(This page intentionally left blank.)

TABLE OF CONTENTS

SECTION / PARAGRAPH	TITLE	PAGE
1	SCOPE	1
2	APPLICABLE DOCUMENTS	3
2.1	Government Documents	3
2.2	Non–Government Documents	4
3	REQUIREMENTS	7
3.1	Critical Item Definition	7
3.1.1	Item Diagrams	7
3.1.2	Interface Definition	7
3.1.2.1	Functional Interface	7
3.1.2.2	Physical Interface	13
3.1.3	Major Component List	15
3.1.4	Government Furnished Property List	15
3.1.5	Government Loaned Property List	15
3.1.6	Customer Furnished Property (CFP) List	15
3.2	Characteristics	15
3.2.1	Performance	15
3.2.1.1	Electrical Performance	16
3.2.1.2	Mechanical/Structural Performance	29
3.2.2	Operational Modes	33
3.2.3	Physical Characteristics	33
3.2.3.1	Weight Limits and Mass Properties	33
3.2.3.2	Dimension Limitations	34
3.2.3.3	Software Requirements	34
3.2.3.4	Thermal	35
3.2.4	Reliability	36
3.2.4.1	Failure Modes and Effects Analysis and Critical Items List	36
3.2.4.2	Worst–Case Analysis	37
3.2.4.3	Part Stress Analysis	37

TABLE OF CONTENTS (Continued)

SECTION / PARAGRAPH	TITLE	PAGE
3.2.5	Maintainability	37
3.2.6	Environmental Conditions	37
3.2.6.1	Pressure	37
3.2.6.2	Acoustic Noise	37
3.2.6.3	Shock	38
3.2.6.4	Thermal Vacuum	38
3.2.6.5	Magnetic Fields	38
3.2.6.6	Temperature	39
3.2.7	Transportability	39
3.2.8	Durability Factors	39
3.2.9	Grounding, Bonding, Shielding	39
3.2.10	Redundancy	39
3.2.11	Radiation	39
3.2.11.1	Single Event Upset (SEU)	39
3.2.12	Plasma Discharge	39
3.2.13	Atomic Oxygen	40
3.2.14	Meteoroid and Space Debris	40
3.2.15	Finite Element Model (FEM) Requirements	40
3.2.15.1	Finite Element Model Guidelines	40
3.2.15.2	Deliverable NASTRAN Model Data	41
3.2.15.3	Deliverable Model Validity Checks	41
3.2.15.4	NASTRAN Model Verification	42
3.2.16	Thermal Math Models	43
3.2.16.2	Reduced Node Thermal Model Requirements	46
3.2.16.3	Guidelines for the Detailed Assembly Thermal Model	48
3.2.17	GSE Requirements	49
3.2.17.1	Electrical Ground Support Equipment (EGSE)	49
3.2.17.2	Mechanical Ground Support Equipment (MGSE)	49
3.3	Design and Construction	49
3.3.1	Materials, Processes, and Parts	49

TABLE OF CONTENTS (Continued)

SECTION / PARAGRAPH	TITLE	PAGE
3.3.1.1	Approved Standard Parts, Materials, and Finishes	49
3.3.1.2	Approval of Non–Standard Parts, Materials, and Finishes	49
3.3.1.3	Parts, Materials, and Finishes List	50
3.3.1.4	Properties of Materials	50
3.3.1.5	Stress Corrosion	50
3.3.1.6	Fracture Mechanics	50
3.3.1.7	Dissimilar Metals	50
3.3.1.8	Magnetic Metals	50
3.3.1.9	Finish	50
3.3.1.10	Lubricants and Sealants	50
3.3.2	Electromagnetic Radiation	51
3.3.3	Nameplates and Product Marking	51
3.3.4	Workmanship	51
3.3.5	Interchangeability	51
3.3.6	Safety	51
3.3.6.1	Personnel	51
3.3.7	Human Performance/Human Engineering	51
3.4	Documentation	51
3.5	Logistics	52
3.5.1	Maintenance	52
3.5.2	Supply	52
3.6	Precedence	52
4	QUALITY ASSURANCE PROVISIONS	53
4.1	General	53
4.1.1	Responsibility for Verification	53
4.1.2	Testing Locations	53
4.1.3	Special Tests and Analysis	53
4.1.3.1	Torsional Stiffness Test	53
4.1.3.2	Release Mechanical Test	53

TABLE OF CONTENTS (Continued)

SECTION / PARAGRAPH	TITLE	PAGE
4.1.3.3	Random Vibration Analysis	53
4.2	Verification Methods	54
4.3	Verification Phases	54
4.3.1	Protoflight Hardware	54
4.3.1.1	Protoflight Test Levels	54
4.3.1.2	HGA Assembly Protoflight Tests	54
4.3.2	Flight Hardware	54
4.3.2.1	Flight Test Levels	54
4.3.2.2	HGA Assembly Flight Tests	54
4.4	Verification Environment	55
4.4.1	Test Equipment Verification	55
4.4.2	Verification Conditions	55
4.5	Verification Documentation	55
5	PREPARATION FOR DELIVERY	57
5.1	Packaging and Preservation	57
5.2	Marking for Shipment and Storage	57
6	NOTES	59
6.1	Definitions	59
6.2	Abbreviations and Acronyms	59
6.3	Miscellaneous Notes	62
6.4	Requirements Traceability Matrix	62

LIST OF FIGURES

FIGURE	TITLE	PAGE
1	High Gain Antenna Functional Block Diagram	8
2	HGA Assembly – Stowed Configuration	9
3	HGA Assembly – Deployed Configuration	10
4	HGA Tracking Positions	11
5	Command and Telemetry Bus Synchronize–with–Data–Word Message	26
6	HGA/C&DH Gimbal Control Timing	27
7	Maximum Time Averaged Duty Cycle	33

LIST OF TABLES

TABLE	TITLE	PAGE
I	HGA Link Functional Interface	12
II	Transmitter Group Performance Characteristics	17
III	Gimbal Performance Parameters	22
IV	1553 Bus Operations	24
V	MIL–STD–1553B Mode Code Utilization	25
VI	Design Limit Loads	31
VII	Random Vibration Levels	38
VIII	HGA Assembly Protoflight/Flight Tests (TBR–33)	55

TBD LOG

ITEM	SECTION	PAGE	SUBJECT	RESP.	DUE
TBD–1	3.2.1.1.7.7	26	Dwell data	GE	HGA PDR
TBD–2	3.2.1.1.8.2	28	Standby power	Spar	HGA PDR
TBD–3	3.2.1.1.8.2	28	Program track power	Spar	HGA PDR

TBR LOG

ITEM	SECTION	PAGE	SUBJECT	RESP.	DUE
TBR−1	3.1.2.1.1.2	12	Calibration receiver	GE	HGA PDR
TBR−2	3.1.2.2.2.2	15	Conductive interface	GE	HGA PDR
TBR−3	3.2.1.1.2	16	Power flux density	GE	HGA PDR
TBR−4	Table II	17	Phase nonlinearity	GE	HGA PDR
TBR−5	Table II	17	Gain flatness	GE	HGA PDR
TBR−6	3.2.1.1.6	19	Net gain	GE	HGA PDR
TBR−7	3.2.1.1.6	19	Net gain	GE	HGA PDR
TBR−8	3.2.1.1.6	19	Sidelobe level	GE	HGA PDR
TBR−9	3.2.1.1.7.5.2	21	Command interval	GE	HGA PDR
TBR−10	Table III	22	Torsional resonant mode	GE	HGA PDR
TBR−11	3.2.1.1.7.6.1	23	Telemetry rate	GE	HGA PDR
TBR−12	3.2.1.1.7.6.1	23	Encoder resolution	GE	HGA PDR
TBR−13	3.2.1.1.7.7.1	26	Positional command	GE	HGA PDR
TBR−14	3.2.1.1.8.2	28	Survival mode power	GE	HGA PDR
TBR−15	3.2.1.2.3	29	Relational accuracy	GE	HGA PDR
TBR−16	3.2.1.2.3	29	Planar accuracy	GE	HGA PDR
TBR−17	3.2.1.2.12.2	31	Center of gravity	GE	HGA PDR
TBR−18	3.2.1.2.13	32	Stowed natural frequency	GE	HGA PDR
TBR−19	3.2.1.2.14	33	Deployed natural frequency	GE	HGA PDR
TBR−20	Figure 7	33	Time averaged duty cycle	GE	HGA PDR
TBR−21	3.2.3.1.1	34	Weight	GE	HGA PDR
TBR−22	3.2.3.1.2	34	CG offset	GE	HGA PDR
TBR−23	Table VII	38	Vibration levels	GE	HGA PDR
TBR−24	Table VIII	55	HGA tests	GE	HGA PDR

TBS LOG

ITEM	SECTION	PAGE	SUBJECT	RESP.	DUE
TBS–1	3.1.2.1.2.2	13	RT address	GE	HGA PDR
TBS–2	3.1.2.2	13	RT address	GE	HGA PDR
TBS–3	3.2.1.1.7.6	23	Telemetry format	GE	HGA PDR

(This page intentionally left blank.)

1 SCOPE

This specification establishes the performance, design, development and test requirements for the High Gain Antenna (HGA) Assembly. These requirements are derived from the EOS Spacecraft Communication Subsystem Specification.

(This page intentionally left blank.)

2 APPLICABLE DOCUMENTS

2.1 Government Documents

The following documents of the exact issue shown, form a part of this specification to the extent specified herein. In the event of conflict between the documents referenced herein and the contents of this specification, the contents of this specification shall be considered a superseding requirement.

SPECIFICATIONS:

Federal

Military

MIL–B–5087B 15 October 1964 Int. Amend. 3 24 December 1984	Bonding, Electrical and Lightning Protection for Aerospace Systems
DOD–STD–100, Rev. C	Engineering Drawing Practice Notice 1, 4 May, 1980 Notice 2, 28 Nov 1980 Notice 3, 1 March 1983 Notice 4, 4 May 1983

Other Government Activity

GSFC STDN No.101.2 September, 1988	Space Network Users' Guide, Revision 6
NHB5300.4	Workmanship Specification

STANDARDS:

Federal

ANSI/MIL–STD–1815A	Military Standard, Ada Programming Language
MIL–STD–1521B 4 June 1985	Military Standard Technical Reviews and Audits for Systems Equipments, and Computer Software
MIL–STD–889A	Military Standard, Stress and Corrosion Control

Military

MIL–STD–490A 4 June 1985	Specification Practices
MIL–STD–975H 30 June 1989	Military Standard, Electrical, Electronic and Electromechanical Parts List

MIL–STD–1553B	Military Standard, Aircraft Internal Time Division Command/Response Multiplex Data Bus
MIL–STD–130	Military Standard, Identification Marking
MIL–STD–129D	Military Standard, Marking for Shipment and Storage

Other Government Activity

CCSDS 301.0–B–1 January 1987	Recommendation for Space Data System Standards: Time Code Formats, Issue 1
GSFC–731–0005–83 November 1988	General Fracture Control Plan for Payloads Using STS

DRAWINGS:

OTHER PUBLICATIONS:

Regulations

23001146 16 September 1991	Configuration Management Requirements for Subcontractors

Handbooks

MIL–HDBK–5	Military Handbook Metallic Materials and Elements for Aerospace Vehicle Structures
MIL–HDBK–17	Military Handbook, Plastics for Aerospace Vehicles
MIL–HDBK–23	Structural Sandwich Composites

Bulletins

2.2 Non–Government Documents

The following documents of the latest issue shown, form a part of this specification to the extent specified herein. In the event of conflict between the documents referenced herein and the contents of this specification, the contents of this specification shall be considered a superseding requirement, except for higher tier documents.

SPECIFICATIONS:

PN20008633 28 January 1992	Software Requirements for Subcontractors
IS20008501 15 May 1992	General Interface Specification (ICD 101)
PN20005869 27 July 1992	EMI/EMC Control Plan (SEP 106)

PS20005404 15 May 1992	Verification Specification (VRD 110)
20004280 12 July 1991	Performance Assurance Requirements, Subcontracts
20008650 23 March 1992	EOS Program Approved Materials and Processes List (PA 460)
20008648 11 March 1992	EOS Program Approved Parts List (PA 325)
WS20008513 19 June 1992	Statement of Work, EOS High Gain Antenna
20008661 18 July 1990	EOS Fracture Control Implementation Plan
Source:	General Electric Company Astro–Space Division P.O. Box 800 Princeton, NJ 08543–0800

DRAWINGS:

ICD20008513 July 1992	Interface Control Document, HGA
Source:	General Electric Company Astro–Space Division P.O. Box 800 Princeton, NJ 08543–0800

(This page intentionally left blank.)

3 REQUIREMENTS

The High Gain Antenna Assembly shall meet all performance requirements specified herein under all combinations of environmental conditions and inputs described and after exposure to the launch environment described herein.

3.1 Critical Item Definition

The High Gain Antenna (HGA) Assembly provides the major interface between the EOS Spacecraft and the Tracking and Data Relay Satellite System (TDRSS). The HGA performs the function of TDRSS Return link telemetry transmission at Ku–band. The HGA also provides an S–band Forward and Return Link interface between the EOS Spacecraft and the TDRSS. The HGA Assembly will provide for communications to and from TDRSS using the KSA Return and the SMA and SSA Forward and Return services.

3.1.1 Item Diagrams

Figure 1 shows the HGA Functional Block Diagram. Figure 2 defines the local axes and Spacecraft axes for the stowed configuration. Figure 3 identifies the local axes, Spacecraft axes, and elevation and azimuth rotation limits for the deployed configuration. Figure 4 shows the HGA tracking positions. The characteristics of each component and the properties of each signal are described in Section 3.2 of this specification.

3.1.2 Interface Definition

3.1.2.1 Functional Interface

The HGA provides external Spacecraft communications to TDRSS and subsystem interfaces to the Communications and C&DH subsystems for RF, command and telemetry functions. The TDRSS communications interface to the HGA are shown in Table I. The Communications and C&DH subsystem interfaces are described in the following paragraphs.

3.1.2.1.1 Communications Subsystem Interface

The S–band functions of the HGA Assembly shall provide simultaneous transmit and receive operations. The Ku–band and S–band functions of the HGA Assembly shall be capable of simultaneous operation. Refer to Figure 1 for a Functional Block Diagram.

3.1.2.1.1.1 TDRSS Ku–band Return Link

The HGA Assembly will be driven from other components of the communications subsystem with an 882.55 MHz IF signal which has been SQPSK modulated at a 150 Msps rate on each channel. The HGA will upconvert and transmit this signal at 15003.4 MHz. The HGA will also be supplied a reference frequency at 1765.1 MHz which shall be used in generating the transmitter LO frequency.

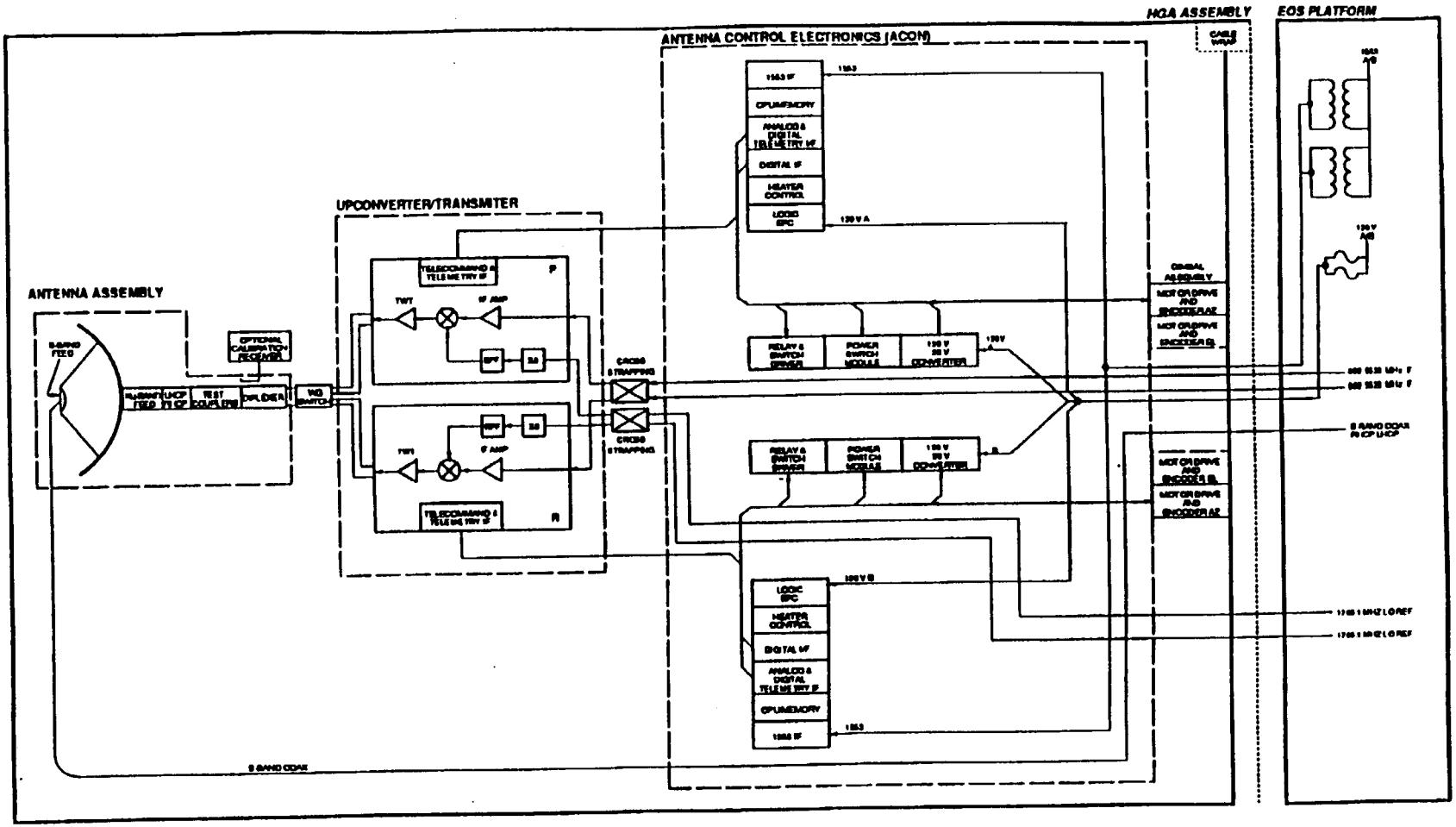

Figure 1. High Gain Antenna Functional Block Diagram

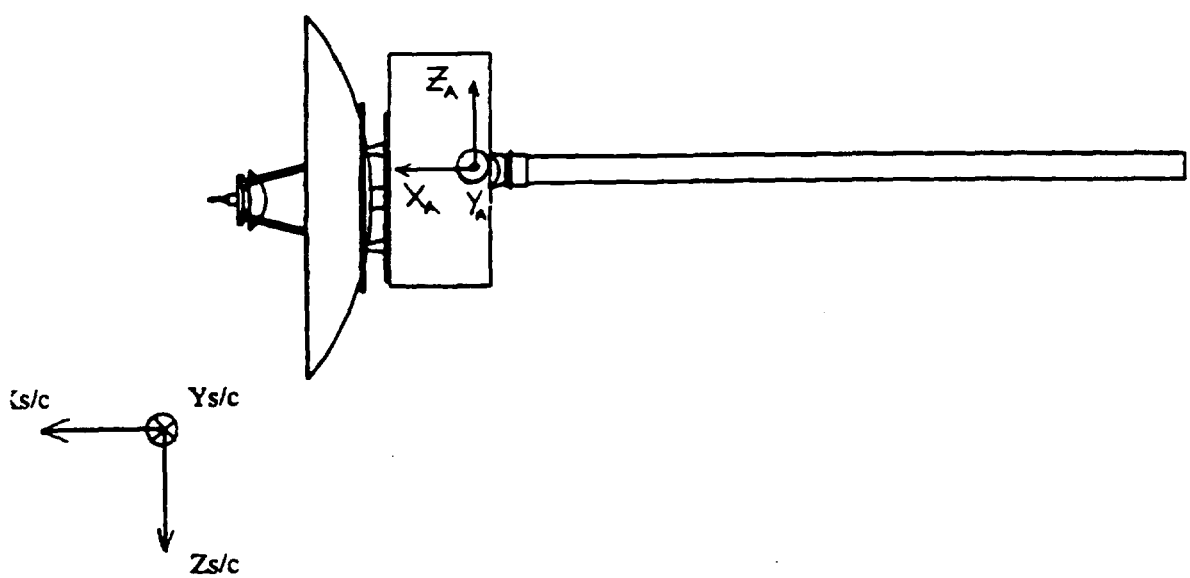

Figure 2. HGA Assembly – Stowed Configuration

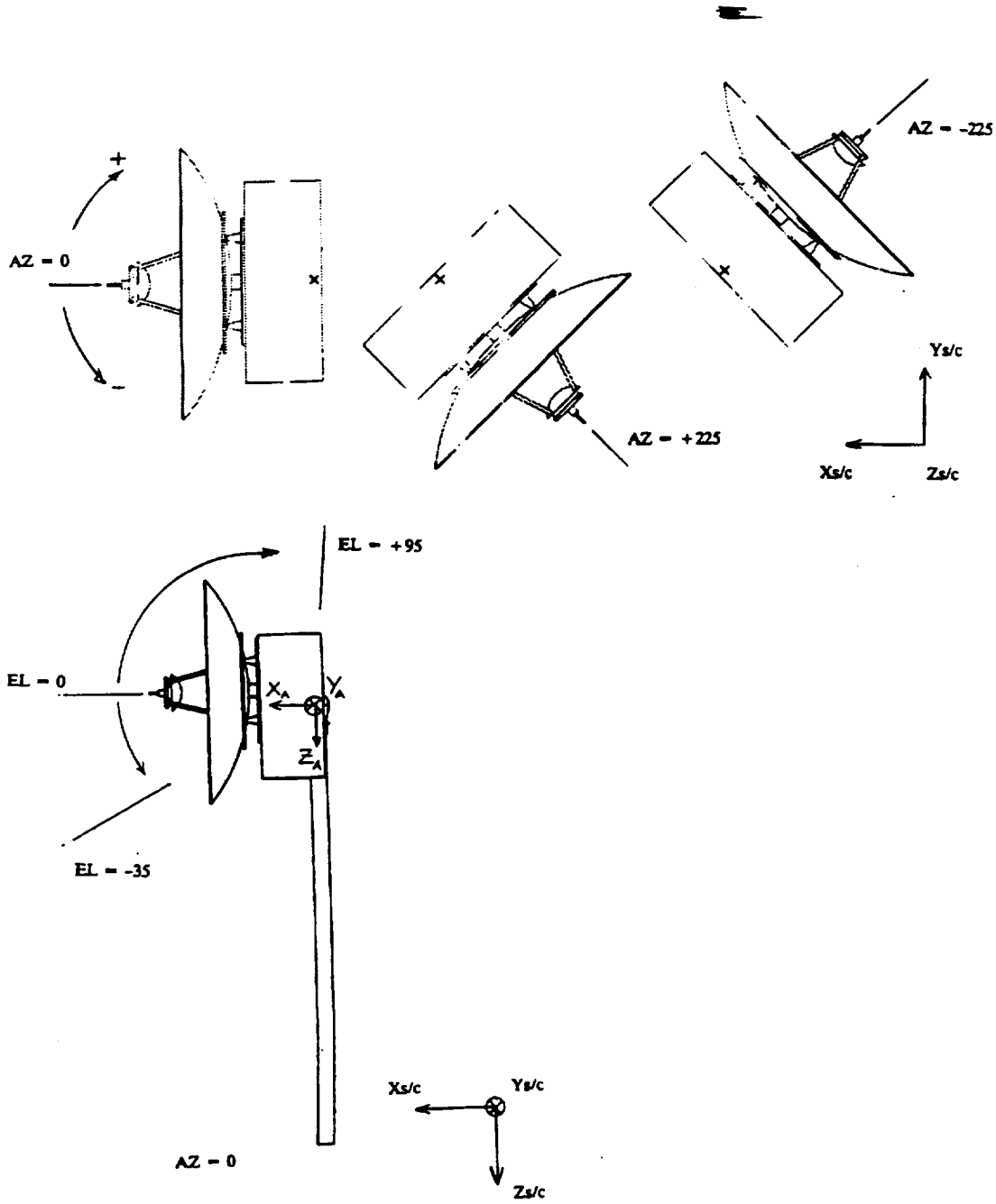

The local coordinate system of the HGA shall move with both the AZ and EL rotations of the HGA. The Spacecraft coordinate system will remain fixed in the orientation shown in this layout.

Figure 3. HGA Assembly – Deployed Configuration

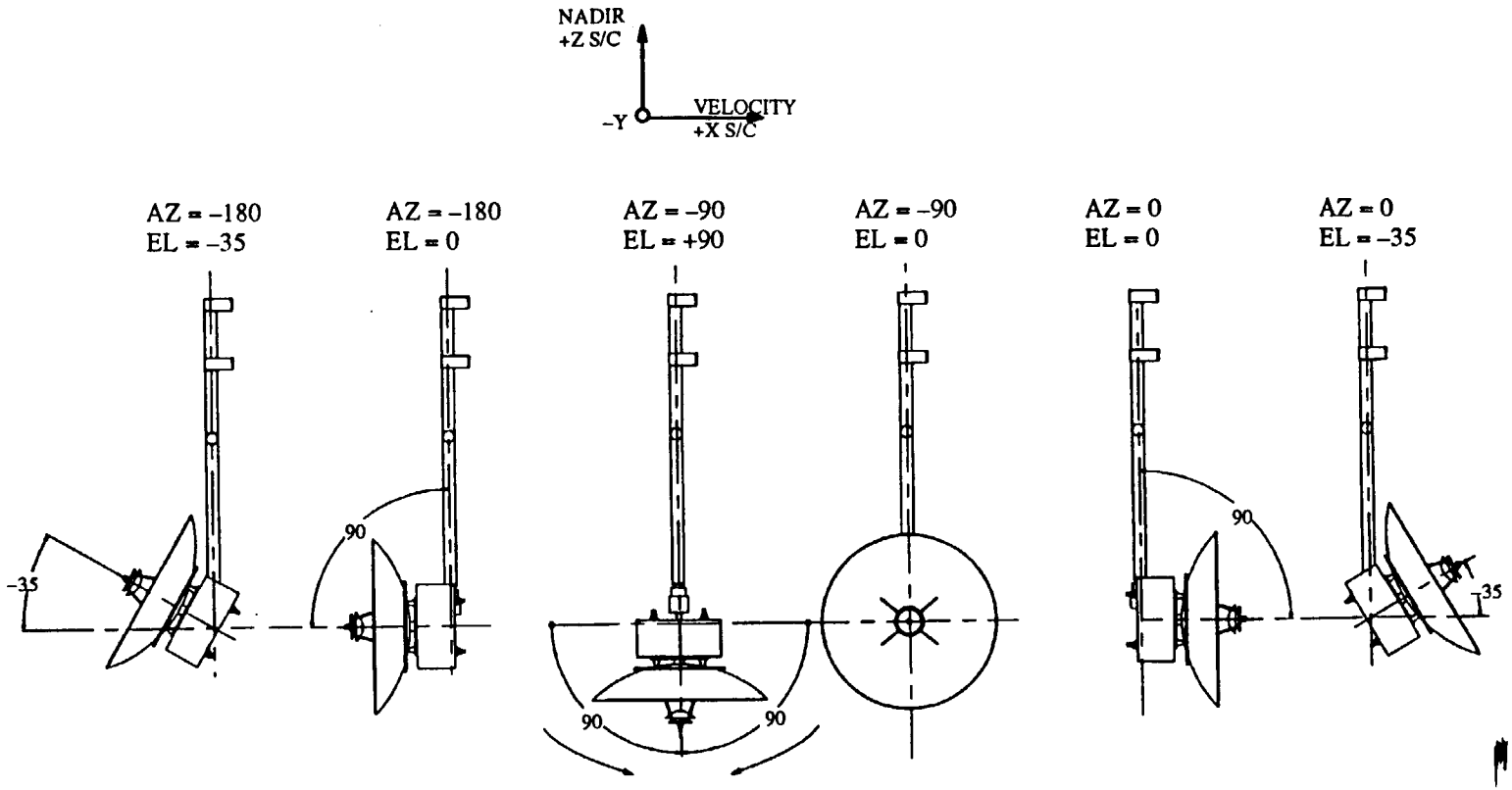

90 DEG. MOVEMENT ONLY
FROM HORIZONTAL AXIS.
(DOES NOT SWEEP 180 DEG. FROM ONE AXIS TO THE OTHER)

ELEVATION AXIS SWEEP = -35 DEG. TO +95 DEG.
AZIMUTH AXIS SWEEP = +225 DEG. TO -225 DEG.

HGA TRACKING POSITIONS
POSITIONS CAN BE OBTAINED BY COMPOUND ANGLES.

Figure 4. HGA Tracking Positions

Table I. HGA Link Functional Interface

TDRSS Service	Link Description	Maximum Data Rate
KSA Return	High Rate Telemetry	150 Mbps (300 Msps)
SMA Forward SMA Return	Low Rate Cmds & Data Low Rate Telemetry	1 kbps 16 kbps
SSA Forward SSA Return	High Rate Cmds & Data Medium Rate Telemetry	10 kbps 272 kbps

3.1.2.1.1.2 TDRSS Ku–band Forward Link (for Calibration Receiver)

The HGA will provide a telemetry signal whose level is a function of the KSA forward link signal level. The input signal (TDRSS KSA forward link signal) will have the following characteristics:

a. Center Frequency — 13.775 GHz ± 0.7 MHz

b. Signal Bandwidth — 6 MHz (between 1st spectrum zero crossings)

c. Dynamic Range — –168 dBW to –153 dBW **(TBR–1)** referenced to an isotropic receiving antenna

d. Polarization — Left or right–hand circular

3.1.2.1.2 C&DH Interfaces

The primary command and telemetry interface to the HGA shall be via redundant MIL–STD–1553B buses. The redundant busses will be provided on separate connectors. The HGA interface to the C&DH subsystem is equivalent to a Bus Data Unit as described in IS20008501. The HGA C&DH interface shall meet the electrical requirements of a BDU interface as described in IS20008501. Redundant signals will be provided on separate connectors. The electrical characteristics of all C&DH interfaces shall be as specified in IS20008501.

3.1.2.1.2.1 Remote Terminal Interface

The HGA Assembly shall interface to the Spacecraft Housekeeping bus via two MIL–STD–1553B Remote Terminal (RT) Interfaces. The Remote Terminal shall be implemented in accordance with MIL–STD–1553B Notice 2. Implementation within MIL–STD–1553B shall include (see Paragraph 3.2.1.1.7.7):

a. Subaddress

b. Mode Code Illegalization

c. Transformer coupled stubs

d. RT Terminal Address Parity

e. Redundancy

3.1.2.1.2.2 RT Terminal Address Assignment

Each of the HGA's RTs shall be assigned a unique terminal address. RT "X" shall be assigned to RT address **(TBS–1)**. RT "Y" shall be assigned to RT address **(TBS–2)**.

3.1.2.1.3 Power Systems Interface

The HGA will be provided with two separate, independently fused, isolated power feeds "A" and "B" with separate isolated power returns. Power feed "A" will be provided on a separate connector than that of power feed "B." In the event of a fault, either "A" or "B" or both feeds may be energized at one time. The normal operating configuration will be both "A" and "B" energized at the same time.

3.1.2.2 Physical Interface

The electrical interfaces of the HGA Assembly shall conform to the ICD20008513. ICD20008513 will define the characteristics for each flight subsystem module submitted by the contractor.

The mechanical interface to the boom shall be located at the gimbal drive. The gimbal drive housing shall supply a boom mounting flange with a minimum of four attachment points. The gimbal interface will be defined in detail in ICD20008513.

In the stowed position the HGA component box will be mounted to the Spacecraft at four points. The location of these points are defined in detail in ICD20008513.

3.1.2.2.1 Structure/Mechanisms Interfaces

The following parameters are to be specified in HGA ICD20008513.

a. Physical size

b. Mounting requirements and interfaces

c. Electrical connector locations and part number

d. Connector reference designators

e. Method of unit identification

f. External finishes

g. Configuration

h. Weight and center of gravity

i. Moment of inertia (GE Astro will supply tie–down weight and inertia)

The mechanical interfaces to the EOS Spacecraft occur at the end of the antenna boom which interfaces to the azimuth gimbal assembly and the launch retention system which interfaces to the antenna mounted electronics (RF compartment) of the HGA Assembly. There will be four interface attachments. Responsibility for the boom and the tie down mechanism(s) shall be with GE Astro. The HGA origin shall be located at the intersection of the gimbal center lines and the coordinate system shall be oriented as per ICD 20008513.

The minimum information required for GE Astro to analyze the dynamic behavior of mechanisms and sources of dynamic disturbances is as follows and will be provided by the subcontractor:

a. Step time

b. Impulse

c. Step frequency

d. Torque versus time profile

e. Linear force versus time profile

f. Angular momentum

3.1.2.2.1.1 Gimbal Drive

The HGA Gimbal Drive interfaces shall perform the following functions for the Spacecraft:

a. Provide a means of interconnecting the HGA boom and HGA reflector.

b. Provide controlled HGA steering in tracking TDRSS in response to commands from the C&DH subsystem.

c. Provide a means of measuring each gimbal axis angular displacement and separately controlling the motion of each gimbal about its axis.

d. Provide the capability to point the reflector within the envelope described in Figure 3.

3.1.2.2.2 Thermal Control Interfaces

The thermal interfaces of the HGA assembly shall include radiative interfaces with the Spacecraft and conductive interfaces with the HGA boom/cable harness and structure mounting. These parameters shall be determined as specified in the following sections.

3.1.2.2.2.1 Radiative Interfaces

The radiative interface between the Spacecraft and the HGA will be determined by GE Astro using the reduced thermal math models delivered in accordance with this specification. Results of these analyses will be provided to the subcontractor.

3.1.2.2.2.2 Conductive Interfaces

Thermal conduction between the HGA assembly, the HGA boom, and the structure (stowed configurations) will be limited by the following conditions:

Antenna boom temperature	
Minimum	–30°C **(TBR–2)**
Maximum	+50°C **(TBR–2)**
GDA to boom isolator conductance	≤0.3 watts/°C **(TBR–2)**
Wire bundle conductance	≤0.05 watts/°C **(TBR–2)**
Structure mounting interface to HGA	
Minimum	–30°C **(TBR–2)**
Maximum	+50°C **(TBR–2)**

3.1.2.2.3 Ground Support Equipment (GSE) Interfaces

Electrical and mechanical ground support equipment interfaces that allow post shipment checkout of the HGA assembly are defined in Section 3.2.17.

3.1.3 Major Component List

The HGA Assembly consists of the following major items:

HGA Assembly Reflector and Feeds

Gimbal Drive and Cable Wrap Assembly

Antenna Controller

RF Electronics

Primary Structure

3.1.4 Government Furnished Property List

Not Applicable

3.1.5 Government Loaned Property List

Not Applicable

3.1.6 Customer Furnished Property (CFP) List

Pyros, actuators, and mounting brackets for pyro shock testing.

3.2 Characteristics

3.2.1 Performance

The High Gain Antenna Assembly shall provide the following functional characteristics throughout the specified environments unless otherwise specified.

3.2.1.1 Electrical Performance

3.2.1.1.1 Ku–band Functions

a. Polarization:	Right–hand or left–hand circular, selectable
b. Frequency:	Specified in Table II
c. Power Handling:	At least 2 dB greater than the maximum power at the antenna
d. Coverage:	±225° in azimuth about the earth pointing (Nadir) axis. From –35° to +95° in elevation from the +X axis. See Figure 3.
e. Axial Ratio:	<1.5 dB over 3 dB beamwidth
f. Steering Information:	Program (open loop) track
g. EIRP:	52.2 dBW minimum over a ±0.4° beamwidth

3.2.1.1.2 Ku–band Earth Power Flux Density

In–band power flux density at the earth's surface due to the Ku–band transmitter shall be within the limits defined by Appendix G of STDN 101.2 with the earth grazing angle requirement limited to 1.5 degrees minimum. **(TBR–3)**

3.2.1.1.3 Ku–band Electronics

The Transmitter Group is defined as the upconverters, RF power amplifiers, filters, diplexer, antenna and any other equipment which is used for TDRSS Ku–band return link operation. The transmitter group performance characteristics shall be as specified in Table II.

3.2.1.1.4 Calibration Receiver

The calibration receiver shall be used for calibration of HGA alignment offsets on orbit, and shall be able to be commanded ON or OFF.

3.2.1.1.4.1 Output Signal Characteristics

The calibration receiver shall have a resolution of 0.2 dB or greater over the dynamic range specified in Section 3.1.2.1.1.2. The format of the telemetry output shall be as defined in Section 3.2.1.1.7.6.

Table II. Transmitter Group Performance Characteristics

Parameter	Description
IF Input center frequency	882.5529 MHz
IF Input level	0 dBm ± 2.5 dB
LO Input Frequency	1765.1 MHz
LO Input Level	0 dBm ± 2.5 dB
RF Output center frequency (f_o)	15,003.4 MHz
Phase nonlinearity (applies for all types of phase nonlinearities) (peak)	3 degrees maximum over ±80 MHz **(TBR–4)**
Gain flatness (peak)	0.3 dB maximum over ±80 MHz **(TBR–5)**
Gain slope	0.1 dB/MHz maximum over ±80 MHz
AM/PM	10 deg/dB maximum
Input and Output frequency stability (peak)	(for reference only)
1–sec observation time	3×10^{-9} maximum
5–hr observation time	1×10^{-7} maximum
48 hr observation time	3×10^{-7} maximum
Input and Output incidental AM (peak)	
At frequencies < 2 kHz	0.6 percent maximum
At frequencies between 2 kHz and 10 kHz	3 percent maximum
At frequencies >10 kHz	5 percent maximum
Untracked spurious PM	2 degrees maximum
Minimum 3dB bandwidth prior to power amplifier	300 MHz minimum
Untracked phase noise (rms) (1 kHz to 150 MHz)	1.5 degrees maximum

Table II. Transmitter Group Performance Characteristics (Continued)

Parameter	Description
Transmit filter bandwidth (after TWTA)	
–3 dB	f_o ±150 MHz
–10 dB	f_o ±187.5 MHz
–20 dB	f_o ±240 MHz
–40 dB	f_o ±405 MHz
–60 dB	f_o ±715 MHz
Spurious out–of–band (including harmonics)	≤–60 dBc
Phase Noise (1 Hz bandwidth) (for ref. only)	Input/Output
1 Hz	< –40 dBc/–22 dBc
10 Hz	< –68 dBc/–50 dBc
100 Hz	< –90 dBc/–72 dBc
1 kHz	< –97 dBc/–79 dBc
10 kHz	< –100 dBc/–82 dBc
150 MHz	< –168 dBc/–150 dBc

3.2.1.1.4.2 System Performance Characteristics

Calibration test output as a function of temperature, pointing offset, and signal strength shall be included in an open–loop antenna pointing test report with and without operation of S–band.

3.2.1.1.5 Ku–band Test Coupler

Two test couplers (one for each polarization) shall be provided to sample the Ku–band output power and inject a signal to the calibration receiver. The coupling value shall be 40 ±1 dB over the operational frequency and temperature ranges. The coupled port shall have an SMA female connector and shall be accessible to the contractor. A set of calibration curves that characterize coupling vs frequency and temperature shall be provided.

3.2.1.1.6 S–band Antenna

a.	Polarization:	Right Hand and Left Hand Circular	
b.	Coverage:	Same as Ku–band Antenna	
c.	Frequency:	2106.4 ±3.5 MHz 2287.5 ±3.5 MHz	(Forward Link) (Return Link)
d.	Power Handling:	6 W (minimum)	
e.	Boresight Antenna Gain	The gain specified below is the minimum gain over ±0.4 degrees at boresight. The net gain includes losses through the cable wrap to the HGA to Spacecraft interface.	
		Forward Link	Return Link
	Net Gain	23.0 dBi **(TBR–6)**	24.0 dBi **(TBR–6)**
e.1.	Antenna Gain	The gain specified below is the minimum gain over ±3 degrees from boresight. The net gain includes losses through the cable wrap to the HGA to Spacecraft interface.	
		Forward Link	Return Link
	Net Gain	20.0 dBi **(TBR–7)**	21.0 dBi **(TBR–7)**
f.	Axial Ratio:	<1.5 dB (Forward Link) (over 3 dB beamwidth) <1.5 dB (Return Link) (over 3 dB beamwidth)	
g.	Sidelobe Level	–20 dB minimum	**(TBR–8)**
h.	VSWR (50 ohms)	≤1.5:1 (Forward and Return)	

3.2.1.1.7 Antenna Pointing and Control

The Antenna Pointing and Control function shall provide the following basic functions:

a. Gimbal control for antenna pointing and tracking

b. Reception and execution of commands from the C&DH subsystem

c. Transmission of telemetry to the C&DH subsystem

d. Control of RF equipment and other components within the HGA assembly

3.2.1.1.7.1 Antenna Modes of Operation

The APC functions shall enter and leave control modes as commanded by the C&DH subsystem. The following basic gimbal operating modes shall be provided:

a. Standby Mode. Upon being commanded into this mode, the antenna shall remain pointed at its last designated position. This is the mode that the APC function should enter after initial power up. The TWTA shall be in the standby mode (low voltage only).

b. Operating Mode. Upon being commanded into this mode, the antenna shall respond to antenna drive commands as defined in Paragraph 3.2.1.1.7.5.2. If no command is received (or a command calling for zero steps is received) for either axis (or both), the antenna shall remain pointed at its last designated position about that axis (or both).

c. Survival Mode. Upon being commanded into this mode, the HGA shall enter a mode where the heater circuits monitor survival temperature limits on the HGA and critical temperature telemetry is available using the 1553 interface.

3.2.1.1.7.2 Pointing Accuracy

The pointing accuracy of the HGA assembly RF boresight referenced to gimbal flange shall be as follows:

<0.15 degree

Note: The above accuracy shall include but not be limited to error due to structure and gimbal drive error, encoder error, thermal distortion, control error, and gimbal alignment error.

3.2.1.1.7.3 Control of RF and Other Components

The APC function shall provide for control of all components resident in the HGA. This shall include at least the following:

a. RF Switches

b. HPAs

c. Heaters

d. Selection of Redundant Components

3.2.1.1.7.4 Embedded Processing Requirements

The APC equipment shall implement the following processing functions as a minimum:

a. Interface with the Spacecraft Housekeeping Bus by implementing all the functions of a Remote Terminal (RT) as specified by MIL–STD–1553B.

b. Host a schedule driven telemetry function to periodically collect telemetry. A default schedule shall reside in firmware to be executed following a power on initialization.

c. Perform an autonomous self–initialization upon application of power.

d. Decode commands received across the MIL–STD–1553B data bus.

e. Execute commands received via the MIL–STD–1553B data bus.

f. Perform a health check upon command.

g. Interface with and control a set of I/O interfaces to HGA assembly components.

3.2.1.1.7.4.1 High Order Language

The embedded processor shall support the execution of code written in Ada, if practical, or the C programming language as a minimum.

3.2.1.1.7.4.2 1553 Message Handling

The embedded processor shall be responsible for initializing and directing the operation of the MIL–STD–1553 RT. Message routing to/from memory shall be accomplished via subaddress descriptor blocks setup by the processor and resident in memory. Upon reception of a valid command the RT shall access the appropriate descriptor block and interpret the message transaction requirements for the command. This shall include: command illegalization, data storage/retrieval pointer, interrupt conditions, and message status word pointer information.

3.2.1.1.7.5 Command Reception and Execution

The APC function shall be able to receive and execute commands sent by the C&DH subsystem. These commands shall be Serial Commands via the MIL–STD–1553B Remote Terminal Interface.

3.2.1.1.7.5.1 On–Demand Command Execution

The APC equipment shall be able to issue On–Demand commands to HGA components at a maximum rate of 10 commands per second. Upon reception of a valid message via the MIL–STD–1553B Housekeeping Bus, the RT shall interrupt the processor to begin the On–Demand command execution cycle.

3.2.1.1.7.5.2 Antenna Drive Commands

The APC shall accept an azimuth command and an elevation command each 512 ms **(TBR–9)** interval. Each command will include a field defining the required direction of motion and a field defining the number of drive steps to be accomplished for the corresponding axis during the next interval. The gimbal step size is defined in Table III. The APC shall execute the commanded number of setups with pseudo–random spacing spread over the next interval.

3.2.1.1.7.5.3 Equipment Safety

The HGA design shall be such that no combination of command inputs can cause damage to the HGA equipment. In particular, the HGA design shall preclude damage if the APC were to receive azimuth commands and/or elevation commands that would otherwise cause motion beyond the stops defined in paragraph 3.2.1.2.11.

Table III. Gimbal Performance Parameters

(Unless otherwise specified, values are on a "per axis" basis)

Life Test	Per SOW Paragraph 4.7.1.7.4
Operational Angle	See Figure 3
Redundant Motors	Dual Stators Windings shall have the same resistance for use with common design electronics.
Maximum Rate	1.20°/sec **(TBR–10)**
Gimbal Step Size	0.0075 degrees maximum
Static Torque Margin	Greater than 3:1 margin (200%)
Inertial Margin	Greater than 40%
Rotational Accuracy	2 arc–minutes maximum cyclic error over 1 output revolution
Axis Encoder Resolution	14 bits (13 bits + sign bit for gimbal location)
Torsional Resonant Mode	No frequency in these ranges: 3.4 – 4.4 Hz, 7.4 – 8.4 Hz, and 11.2 – 12.2 Hz **(TBR–10)**

3.2.1.1.7.6 Telemetry

The APC function shall format and transmit status information to the C&DH subsystem via the serial telemetry interface.

Discrete Telemetry shall consist of at least:

a. Necessary status for Survival Mode

Serial Telemetry shall include at least:

a. Unambiguous gimbal positions for both axes

b. Motor currents

c. HPA currents

d. Component temperatures

e. Status flags (e.g., switch positions, Ku–band polarization)

f. Status codes (e.g., gimbal control mode)

g. Calibration receiver output

h. Transmitter power (forward and reflected)

The temperature telemetry points shall be defined by the subcontractor and shall include, as a minimum, monitor points on all active components, temperature critical components, and major thermal control surfaces.

The format of the telemetry message shall be (8 Bits Resolution) **(TBS–3)**.

3.2.1.1.7.6.1 Gimbal Position Telemetry

The gimbal drive mechanism shall include an encoder for each axis. The APC shall provide position telemetry data at a rate of 1 per 256 msec **(TBR–11)** for each axis. The position output for each axis shall include a 14–bit word **(TBR–12)** defining the position of the corresponding axis (i.e., the least significant bit represents ~0.044 degrees). An extra bit shall be included to identify exact gimbal location and satisfy the unambiguous gimbal position requirement of Section 3.2.1.1.7.6, item 2. The transitional accuracy of the position outputs shall be ±0.0055 degrees or better over the full range of angles.

3.2.1.1.7.7 1553 Bus Operations and Timing

The APC shall implement the 1553 bus operations shown in Table IV. Different subaddress numbers are used to identify the various operations. The transmit/receive bit indicates the direction of data flow. A "0" means that data flows from the C&DH to the HGA. The nominal message intervals represent the expected bus traffic during the time that the HGA is in a normal tracking mode. The contingency traffic indicates the operations invoked by abnormal, diagnostic, and mode change situations. Not all of these contingency operations would be expected to occur at the same time. The total traffic over the 1553 bus would be those shown as nominal plus the contingency. Except for the gimbal control timing (described later), the relative timing between any of these operations is not determined. Each of the operations is described in the following paragraphs.

a. Real–Time Command (Subaddress 1): These are uplinked commands to be sent immediately by the C&DH. These will be used primarily to reconfigure and initialize the APC. However, full commanding capability shall be provided by this operation including antenna pointing.

b. Load/Dump Data (2): Not required.

c. Onboard Command (3): These messages are generated by the SCC and used primarily to send gimbal positioning commands. In addition, this operation must provide full commanding capability.

d. Ancillary Data (4): Not required.

e. SCC OK (5): Not required.

f. Time Code Data (6): Not required.

g. Safe Mode Command (7): Not required.

h. Loop Back (9): This operation provides a diagnostic tool. Provision shall be made to receive and retransmit up to four words.

Table IV. 1553 Bus Operations

Sub-addr. (1)	Name	Trans-mit/Rec Bit	Message Interval (Nominal)	Additional Contingency Traffic Interval	Typical Data Transfer (Words)	REMARKS
1	Real-Time Command	0	N/A	Intermittent	2	Primarily configuration commands
2	Load Data	0	–	–	–	Not required
2	Dump Data	1	–	–	–	Not required
3	Onboard Command	0	512 ms (TBR-16)	Intermittent	2	Gimbal commands; configuration commands
4	Ancillary Data	0	–	–	–	Not required
5	SCC OK	0	–	–	–	Not required
6	Time Code Data	0	–	–	–	Not required
7	Safe Mode Command	0	–	–	–	Not required
9	Loop Back	1 or 0	N/A	Intermittent	4	Diagnostic
16	SCC Processor Data	1	256 ms	–	4	Primarily gimbal encoder data
17	Normal Housekeeping Telemetry Data	1	1.024 s	–	16	Includes temperatures, power, gimbal encoders, APC status
18	Critical Health and Safety Telemetry Data	1	8.192 s	–	4	Primarily temperatures
19	Dwell Data	1	N/A	48 ms	2	Not applicable
0 or 31	Mode Code	1 or 0	256 ms(2)	Intermittent	N/A	See Mode Code, Table V

NOTES:
(1) Decimal numbers. All remaining subaddresses are reserved.
(2) Represents the Sync with Data Word operation.

Table V. MIL–STD–1553B Mode Code Utilization

Transmit/ Receive Bit	Mode Code	Function	Associated Data Word
1	00010	Transmit status word	No
1	00001	Synchronize (see note 1)	No
1	00011	Initiate self–test	No
1	00100	Transmitter shutdown	No
1	00101	Override transmitter shutdown	No
1	00110	Inhibit terminal flag bit	No
1	00111	Override inhibit terminal flag bit	No
1	01000	Reset remote terminal	No
1	10000	Transmit vector word (see note 1)	Yes
0	10001	Synchronize (see note 2)	Yes
1	10010	Transmit last command	Yes
1	10011	Transmit BIT word	Yes

Notes:
1. Used on the Low Rate Science Data Bus only.
2. Used on the Command and Telemetry Bus only.

i. SCC Processor Data (16): Shall contain gimbal position data used for onboard control processing; interval between requests will be 256 ms. The format of this data is expected to be fixed for the duration of the flight.

j. Normal Housekeeping Telemetry Data (17): Shall contain all telemetry data except for status flags and codes; this shall include gimbal positions, temperatures, power and current readings; interval between requests will be approximately one second. The format of this data is expected to be fixed for the duration of the flight. Subcommutation may be required in the message format.

k. Critical Health and Safety Telemetry Data (18): Shall contain status flags and codes, and critical temperatures and currents; interval between requests will be approximately 8 seconds. The format of this data is expected to be fixed for the duration of the flight. The same data points available in this message will be available in the Normal Housekeeping Telemetry Data message.

l. Dwell Data (19): Not required.**(TBD–1)**

m. Mode Code (0 or 31): Most of these operations service 1553 internal operations according to the standard. The Sync with Data Word provides C&DHS timing synchronization to the APC at 256 ms intervals. The APC shall use this operation to control its gimbal positions sampling. The Data Word contains values for the C&DHS major and minor cycles which may be used by the APC for the subcommutation of telemetry. The Sync with Data Word format is shown in Figure 5. Any subcommutation may use the major cycle to determine the proper data point.

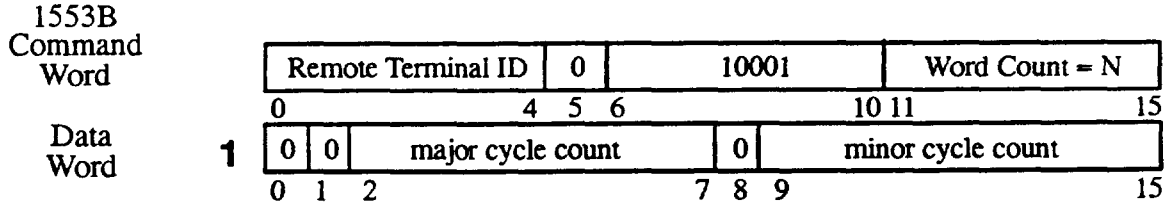

Figure 5. Command and Telemetry Bus Synchronize–with–Data–Word Message

3.2.1.1.7.7.1 Gimbal Control Timing

Figure 6 shows the relationship between the C&DH and the APC related to gimbal control. The Sync with Data Word will be sent every 256 ms with a relative jitter of ±0.2 ms. This jitter includes the contingency of one retry operation following a detected error on the bus. The APC shall use receipt of the Sync with Data Word to start sampling the gimbal position encoders. The sampling shall be completed within 32 ms. in order to control the time ambiguity of the data. The APC shall hold this data until a new sample is taken approximately 256 ms later. The C&DH will request the gimbal position data by sending a bus transmit request with a subaddress of 16. This may occur between 40 and 88 ms following the Sync with Data word, but once the C&DH schedule is finalized, this time will be fixed. The interval between reads will have a tolerance of ±3 ms.

Positional commands over the bus will occur between 88 and 200 ms. **(TBR–13)** following the Sync with Data Word. As with the telemetry read operation, the final schedule will determine the actual command time. The interval between positional commands will be multiples of 512 ms. ±1 **(TBR–16)** ms. Command generation for any cycle is optional. The Vendor shall provide the pseudo–random step algorithm for any possible range of steps.

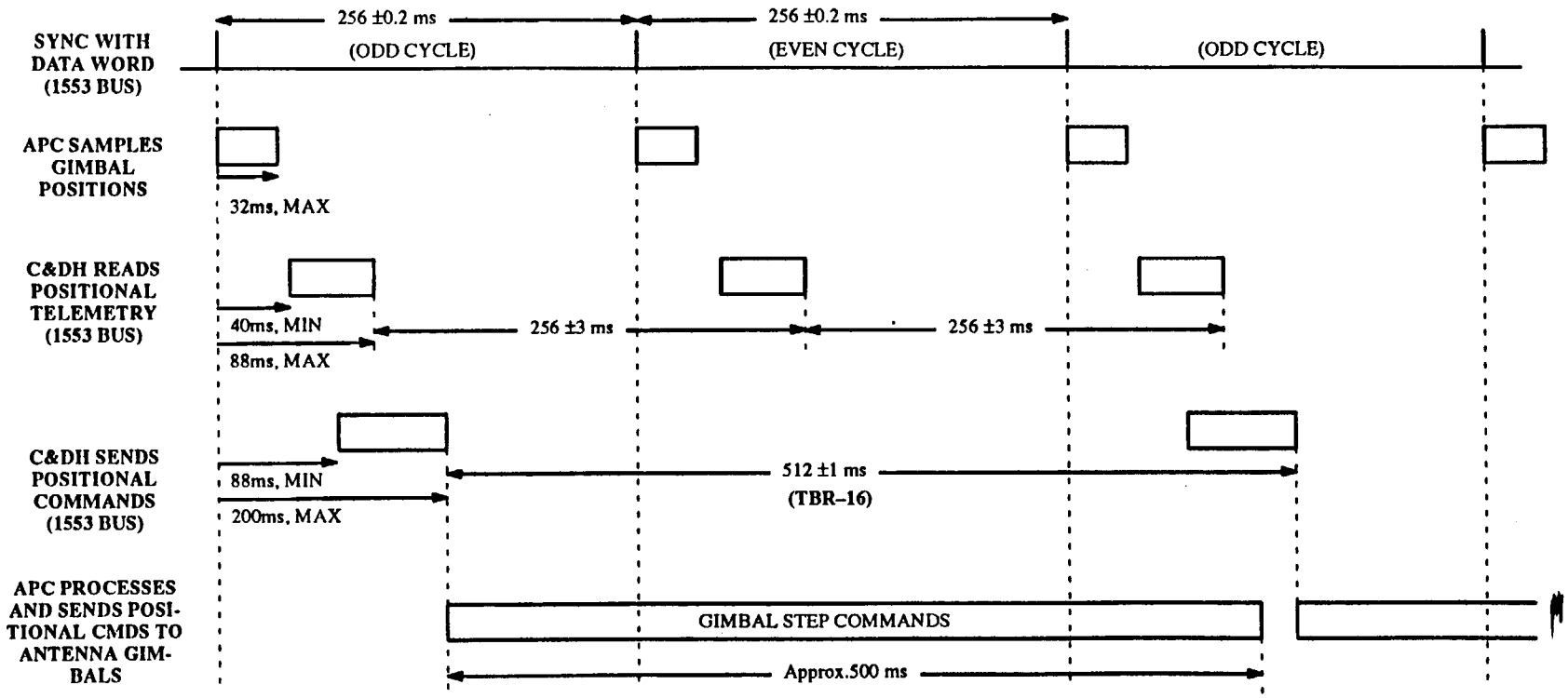

Figure 6. HGA/C&DH Gimbal Control Timing

3.2.1.1.7.7.2 Bus Retry

The APC shall be prepared to respond to one bus retry–on–error operation following any 1553 command. The retry may appear on either the same or on the opposite bus from the first transmission.

3.2.1.1.7.7.3 Telemetry Sampling

All periodic telemetry data sent over the 1553 bus shall have been refreshed in the APC since the previous telemetry message transmission. This does not apply to data sent twice because of the 1553 bus retry–on–error.

3.2.1.1.8 Power Characteristics

The High Gain Antenna assembly shall operate in accordance with requirements specified herein with a dc power source specified in the following and perform correctly when subjected to voltage regulation and ripple as specified in IS20008501, Paragraph 3.1.

3.2.1.1.8.1 Direct Current (dc) Input Voltage

The dc input voltage shall be 120 ±4% Vdc.

3.2.1.1.8.2 Direct Current Input Power

Direct current (dc) input power shall be 165 W maximum for the High Gain Antenna assembly. The maximum input power for all specified voltages measured at the HGA assembly interface connector shall be:

Mode	Maximum Input Power
Standby	**(TBD–2)**
Point/Program Track (Open Loop Pointing)	**(TBD–3)**
KSA Mode	165 W
Survival Mode	50 W **(TBR–14)**

3.2.1.1.8.3 Input Power Buses

a. The power feeds "A" and "B," including their respective returns, shall be kept isolated from each other within the HGA and from command/telemetry signals and associated returns, RF signals and associated returns, and chassis interfaces. (No return cross–tie is permitted.)

b. The current from power feed "A" shall always be returned to "Return A" and the current from power feed "B" shall always be returned to "Return B."

3.2.1.1.8.4 Input Power Protection

a. Protection shall be provided against load faults via fusing or current limiting such that no HGA equipment fault shall short out the feed.

b. Fuses rated greater than 5 amps in size shall be approved by GE Astro. Fuses rated greater than 10 amps shall not be used.

c. Fuses rated less than 0.5 amps shall not be used.

d. All fuses shall be used with a 2:1 derating relative to their expected maximum steady–state load.

3.2.1.1.8.5 Load Fault Protection

No HGA component or subassembly failure shall cause the loss or inability to operate any other component or subassembly on that same feed within the capability of the redundancy and cross–strapping functions designed in the HGA.

3.2.1.1.8.6 Input Power Impedance

As identified in IS20008501 in Paragraph 3.1.

3.2.1.2 Mechanical/Structural Performance

3.2.1.2.1 HGA Structural Interfaces

The structural interfaces between the HGA and the Spacecraft shall be in compliance with HGA ICD20008513.

3.2.1.2.2 HGA Assembly Bulkhead Interfaces

The HGA shall interface to the structure as per HGA ICD20008513.

3.2.1.2.3 HGA Assembly Interface Repeatability

The subcontractor shall provide the capability to remove the HGA and electronics box and replace it with repeatability at the boom/gimbal interface to within 0.025° **(TBR–15)** rotational accuracy and 0.005 inch **(TBR–16)** planar accuracy.

3.2.1.2.4 HGA Assembly Flange Interface

The HGA gimbal flange shall interface to the HGA deployment boom flange as per HGA ICD20008513 (refer to Section 3.1.2.2).

3.2.1.2.5 HGA Assembly Dynamic Volume

The HGA dynamic volume allocated by HGA ICD20008513 shall not be violated under the worst–case environmental dynamic condition.

3.2.1.2.6 HGA Assembly Installation

The HGA shall be installable onto the Spacecraft without requiring disassembly.

3.2.1.2.7 Reflector Removal

The reflector shall be removable and reinstallable to the accuracy defined in Paragraph 3.2.1.1.7.2 without special alignment techniques.

3.2.1.2.8 HGA Assembly Harness

The HGA to Spacecraft electrical harness interface location shall be per HGA ICD20008513.

3.2.1.2.9 HGA Assembly Access

Access to all components and interfaces mounted on or relating to the HGA shall be provided to facilitate integration and test.

3.2.1.2.10 HGA Assembly Retention

Provisions shall be made to secure the HGA assembly until on–orbit deployment. The release mechanisms, booms, and boom hinge shall be the responsibility of GE Astro.

3.2.1.2.11 Gimbal Drive Performance

The gimbal drive mechanism shall be capable of high load capability, low weight, "zero" backlash, high torsional stiffness, and high unpowered holding torque.

The gimbal drive shall be designed to position the normal of the reflector at any position within the envelope as defined in Figure 3. The gimbal drive performance characteristics shall be as summarized in Table III. Hard stops shall be used to ensure the envelope defined in Figure 3 is not exceeded. The hard stops shall preclude damage to the gimbal assembly.

3.2.1.2.12 Loads

3.2.1.2.12.1 RF Compartment Design

The RF compartment shall be designed to support the full weight of the antenna dish, gimbal assembly and all the components housed within during all phases of operation, including I&T, shipping, launch, and mission operations.

3.2.1.2.12.2 Acceleration

The amount of acceleration which the HGA assembly experiences during the launch vehicle flight is a function of the dynamic interactions between the HGA and the EOS Spacecraft structures. The preliminary design accelerations have been estimated for use in a preliminary sizing of the HGA structure in a launch configuration (stowed HGA). The HGA structure, as a minimum, shall be designed to the design limit loads specified herein. Limit load is defined as the maximum expected flight acceleration. The design limit loads are as follows:

HGA Center of Gravity Design Limit Load and Design Criteria

Design Limit Load:	15.0 Gs as per Table VI **(TBR–17)**
Minimum Yield Factor of Safety:	1.25
Minimum Ultimate Factor of Safety:	1.4
Margins of Safety:	≥0.0

Factors of safety to be applied to loads or stresses resulting from the application of the Design Limit Load:

Yield Load = 1.25 x Limit Load

Ultimate Load = 1.40 x Limit Load

It is important to note that response accelerations at extreme points on the structure may experience higher accelerations than the specified CG values. The specified CG load factor shall be assumed to act in any direction and shall be applied in the direction that creates most severe internal loads in the structure. GE Astro shall approve the selected worst–case(s) for a major configuration change.

Table VI. Design Limit Loads

	Design Limit Loads		
Load Case	**X s/c**	**Y s/c**	**Z s/c**
Case 1	±DLL	0.0	0.0
Case 2	0.0	±DLL	0.0
Case 3	0.0	0.0	±DLL
Case 4	±0.58 x DLL	±0.58 x DLL	±0.58 x DLL

Note 1. DLL = Design Limit Load
2. For each load case, loads shall be applied in all three axes simultaneously and for all loads combinations.

The above design loads are the estimated low frequency transient responses of the HGA CG during launch vehicle flight and do not include loads caused by simultaneous acoustic excitation (see Section 3.2.6.2) which may be significant especially for a lightweight structure with a large surface area such as the HGA dish. The acoustic loads shall be combined with the low frequency transient accelerations using an RSS method.

The above design loads are specified at the CG of the HGA assembly. Accelerations at the extremities of the HGA structure, i.e., HGA dish edge, may exceed the CG design load factor values given and will be estimated by GE Astro upon receiving the HGA finite element model from the subcontractor and will subsequently be verified in the coupled loads analysis cycles.

For test the qualification (protoflight) test level shall be determined as follows:

Qualification Test Levels = Coupled loads analysis results x 1.25

As a goal, the minimum margins of safety calculated for qualification test load conditions (using factors of safety = 1.0) shall not be less than +0.15 and +0.25 for yield and ultimate, respectively. Should the results of the coupled loads analysis yield loads such that adequate margins of safety are not maintained during testing, GE Astro will negotiate a potential reduction in the 1.25 factor for qualification testing. This approach is to be used in order to minimize the mass impacts of designing to overly conservative loads.

The acceptance (flight) test level shall be determined as follows:

Acceptance test levels = Coupled loads analysis results x 1.0

3.2.1.2.12.3 Margins of Safety

The structure shall maintain positive margins of safety through all phases of operation. The factors of safety to be used shall be in accordance with the structural criteria requirements of IS20008501.

3.2.1.2.12.4 Launch and Operational Loads

The HGA Structure shall be designed to withstand the launch and operational loads induced by the following components.

HGA and its deployment system induced loads
Pyro Shock from HGA release/deployment (Refer to the IS20008501, Section 6)

Note: Deployment system includes deployment hinge, boom, and release mechanisms.

3.2.1.2.12.5 Gimbal Load Path Bypass

The gimbal mechanism shall be caged for launch. Caging refers to a device that will provide a mechanical stop for each actuator during launch to ensure that the actuators do not rotate. The gimbal assembly allowable load capability shall not be exceeded when the launch loads as defined in Section 3.2.1.2.12.2 are applied.

3.2.1.2.12.6 Deployed Loads

The maximum on–orbit flight loading shall be 0.015 G at the HGA boom attachment point in the EOS thrust axis (X axis).

3.2.1.2.13 Stowed Natural Frequency

The minimum HGA (the subcontractor designed electronic box assembly and the dish) natural frequency, when rigidly supported at the RF component box, shall be equal to or greater than 40 Hz (TBR–18). Boundary conditions shall be defined in ICD20008513.

3.2.1.2.14 Deployed Natural Frequency

The minimum vendor supplied HGA assembly deployed natural frequency fixed base at the gimbal flange interface shall be:

2.8 Hz **(TBR–19)** minimum all axes (including torsional)

3.2.2 Operational Modes

The operational scenario will vary on–orbit but the following definitions shall be used as a basis for the thermal design of the HGA.

Survival Mode – This mode is a condition where the heater circuits monitor survival temperature limits on the HGA and critical temperature telemetry is available using the 1553 interface. This mode could occur for any number of orbits or even days.

Normal Operation:

Program Track – The HGA will continuously program track on either TDRS where a line of sight exists. Scheduled contact for the KSA service will average 30 minutes per orbit. A contact is defined as the Ku–band transmitter enabled and the HGA program tracking.

KSA Return Service – The maximum time averaged duty cycle over a sliding window for the Ku–band transmitter on will be as shown in Figure 7 for any time interval.

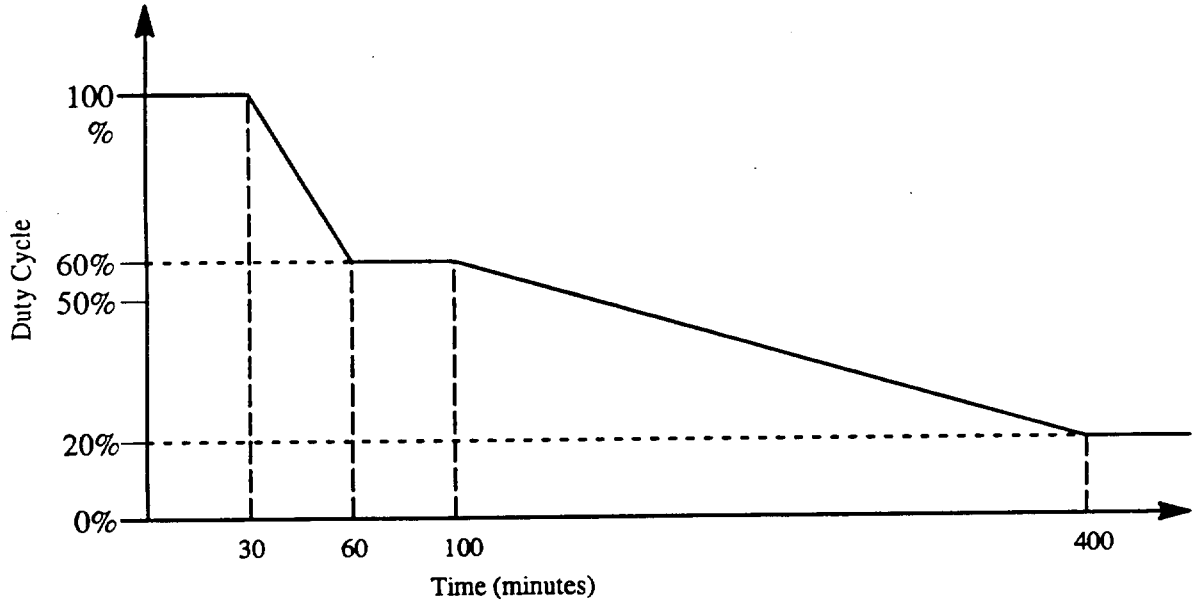

Figure 7. Maximum Time Averaged Duty Cycle (TBR–20)

3.2.3 Physical Characteristics

3.2.3.1 Weight Limits and Mass Properties

3.2.3.1.1 HGA Weight

The weight of the HGA assembly shall not exceed 200 lbs. **(TBR–21)**

3.2.3.1.2 HGA Mass Properties

The radial cg offset of the rotating mass shall not deviate more than 6 inches **(TBR–22)** from the assembly origin. The HGA mass properties shall be as defined in ICD20008513. A detailed mass properties report shall be provided per WS20008513.

3.2.3.2 Dimension Limitations

All dimensions of the HGA assembly shall be in accordance with the ICD20008513 and all applicable sections of this document.

3.2.3.3 Software Requirements

Firmware shall be considered software during its development. Firmware development ends at the time Programmable Read–Only Memory (PROM) is installed with the software and the instantiated PROM successfully passes its acceptance test. Any functionality that is implemented in firmware must meet the requirements for software as specified in the Software Requirements for Subcontractors, PN20008633. Computer Software Configuration Items shall be identified per PN20008633, Appendix B. The functional requirements for the HGA assembly software and firmware are given in the following sections.

3.2.3.3.1 Processor Throughput, I/O Bandwidth, and Memory Margins

Dedicated single–function processors for which maximum loading can be precisely computed shall be sized such that at launch in the worst–case operating modes, the following margins (measured as a percentage of the total available resources) are maintained:

a. 20% of the instruction execution capacity

b. 20% of the I/O bandwidth

c. 30% of the RAM capacity

No margins are required for Read–Only Memory (ROM) capacity in any processor.

3.2.3.3.2 CPU, I/O, and Memory Capacities

During development, all software shall meet the following capacity limitations at PDR, CDR, and FRR.

	Capacity Limitations		
	PDR	CDR	FRR
% of memory capacity used 80% as allowed in 3.2.3.3.1	70%	85%	95%
% of CPU capacity used as allowed in 3.2.3.3.1	70%	85%	95%
% of I/O capacity used as allowed in 3.2.3.3.1	70%	85%	95%

3.2.3.3.3 Software Languages

In order to support good software engineering practices, the following rules shall be applied to all software language selection:

a. If a validated Ada compiler is available for a particular target processor, Ada shall be the preferred language for the development of all software for that processor.

b. If no validated Ada compiler is available but a suitable C compiler is available for a particular target processor, C shall be the preferred language for all software for that processor.

c. If neither a validated Ada compiler or C compiler is available for a particular target processor, software for that processor may be developed in assembly language.

d. Where significant advantage in performance or resource utilization will be realized, selective use may be made of software developed in assembly language rather than the preferred language for the target processor. At least 85% of the software developed for any target processor (measured in Source–Lines of Code) shall be developed in the preferred programming language.

Any exceptions to these rules shall be allowed only by approved waiver.

3.2.3.4 Thermal

The HGA assembly thermal design shall employ passive thermal design techniques (radiators, insulating blankets, etc.) augmented by thermostatically or proportionally controlled heaters, and is the responsibility of the subcontractor. The TCS design shall provide for single–fault tolerance. The thermal design of the HGA shall maintain all HGA component temperatures within their allowable temperature ranges and ensure the HGA performance is maintained.

3.2.3.4.1 TCS Hardware

The HGA thermal control subsystem hardware shall meet the requirements defined in IS20008501, Section 5.4.

3.2.3.4.2 Thermal Analysis

The subcontractor shall perform all thermal analyses of the HGA assembly and provide to GE Astro reduced thermal math models which meet the requirements of Section 3.2.16 for incorporation into the Spacecraft thermal math model (TMM).

3.2.3.4.3 Orbit Parameters and Environmental Constraints

The thermal design of the HGA assembly shall be based on the following orbit parameters and environmental constraints which shall be utilized in the vendor thermal math models for mission orbit analyses:

Orbit altitude		705 km
Orbit inclination		98.2 degrees
Descending Node		10:30 AM ± 15 minutes local mean solar time
Sun–orbit plane angle (Beta angle)		
	Maximum	31 degrees
	Minimum	13 degrees
Solar constant		
	Maximum	0.915 watt/sq in
	Minimum	0.855 watt/sq in
Albedo		
	Maximum	0.375
	Minimum	0.275
Earth IR		
	Maximum	0.167 watt/sq in
	Minimum	0.138 watt/sq in

3.2.3.4.4 Launch Thermal Environment

The thermal environment during the launch phase will be as specified in IS20008501, Sections 5 and 6. Heater circuits will be "ENABLED" at lift–off.

3.2.4 Reliability

The HGA assembly probability of success (P_s) shall not be less than 0.9851 for five years. This shall be achieved using the principles of functional redundancy where applicable. Life shall address ground testing, storage and orbit operation. The HGA assembly shall be designed for five years of

intermittent ground testing and storage. A minimum useful operating life of 5 years in orbit which excludes ground testing is required. During this period the HGA assembly shall meet all requirements specified in Section 3.2. Calculations shall be performed in accordance with 20004280 and shall include all components and assemblies necessary to meet the requirements list in this document.

3.2.4.1 Failure Modes and Effects Analysis and Critical Items List

A Failure Modes and Effects Analysis (FMEA) shall be performed to identify potential critical and catastrophic failures so that susceptibility to failures and their effects can be eliminated. FMEA is to be performed in accordance with 20004280, Section 7. Catastrophic failures are defined as failures that prevent the achievement of mission success. Each single element whose failure would be catastrophic and can not be eliminated from the design shall be identified in a critical items list in accordance with 20004280, Section 7. Justification for the retention of critical items shall be provided in the critical items list.

3.2.4.2 Worst–Case Analysis

Worst–case analysis shall be performed for critical parameters or combinations of parameters that are subject to variations that could degrade performance. The analysis shall set all parameters and environmental stresses for the operation being evaluated at worst–case conditions.

3.2.4.3 Part Stress Analysis

Electrical, electronic, and electro–mechanical parts utilized shall be subjected to stress analysis, for conformance with the derating policy of MIL–STD–975 or GSFC–PPL–19. The analysis shall be performed at the most stressful condition specified for each part application.

3.2.5 Maintainability

The HGA assembly shall be designed so that no regular maintenance will be required. Removable dust covers or other protective devices shall be provided over electrical connectors. Maintainability factors shall include, but are not limited to:

a. Use of standard parts and tools

b. Interchangeability and replaceability of parts

c. Minimizing the need for adjustment, alignment, and calibration.

The compartment shall allow access for repair/replacement of internal parts.

3.2.6 Environmental Conditions

The HGA assembly shall be capable of meeting all requirements of this specification while exposed to, and after being subjected to, the protoflight and acceptance environmental conditions noted in the Verification Specification, PS20005404 as referenced herein. The HGA assembly shall meet all performance requirements following exposure to test and launch natural and induced environments, and during exposure to on–orbit environments stated in IS20008501 as referenced herein.

3.2.6.1 Pressure

The HGA assembly shall be capable of satisfactory operation in a survival mode at all ambient pressures from sea level to deep space, 1 x 10^{-6} torr.

3.2.6.2 Acoustic Noise

The HGA assembly shall be capable of meeting the requirements of this specification after being subjected to the acoustic environment specified in IS20008501, Section 6.3 for flight testing, and PS20005404, Section 6.5 for qualification testing.

3.2.6.2.1 Random Vibration

The HGA assembly shall be capable of meeting the requirements of this specification after being subjected to the random vibrations specified in Table VII. The level is for each of the HGA 3 orthogonal axes. Test durations are defined in PS20005404, Section 4.4.

Table VII. Random Vibration Levels

Preliminary Maximum Expected Flight Level (X, Y, Z Axis)		
Frequency Range (Hz)	Power Spectral Density (G^2/Hz)	Overall G_{RMS}
20 20–50 50–800 800–2000 2000	0.01 +2.73 dB/octave 0.023 –2.73 dB/octave 0.01 } **(TBR–23)**	5.94 **(TBR–23)**

Preliminary Protoflight Level (X, Y, Z Axis)		
Frequency Range (Hz)	Power Spectral Density (G^2/Hz)	Overall G_{RMS}
20 20–50 50–800 800–2000 2000	0.018 +3 dB/octave 0.046 –3 dB/octave 0.018 } **(TBR–23)**	8.32 **(TBR–23)**

3.2.6.3 Shock

The HGA assembly shall be capable of meeting the requirements of this specification after being subjected to the shock spectrum shown in the IS20008501 Paragraph 6.3, and identified in PS20005404, Sections 4.4 and 6.5.

3.2.6.4 Thermal Vacuum

The HGA assembly shall be capable of meeting the requirements of this specification, while exposed to, and after being subjected to the thermal vacuum requirements stated in PS20005404, Section 6.5.

3.2.6.5 Magnetic Fields

The HGA assembly shall meet all of the magnetic field requirements stated in IS20008501, Section 6.2.1.

3.2.6.6 Temperature

The HGA assembly shall be capable of meeting the requirements of this specification while being exposed to, and after being subjected to, the thermal environments stated in PS20005404 and IS20008501.

3.2.7 Transportability

The HGA assembly shall be capable of being transported by surface vehicle or commercial aircraft. The environment experienced by transportation shall be controlled so as to be significantly less severe than those specified in 3.2.6. The HGA assembly shall be handled in accordance with the storage, packaging, and delivery requirements of 20004280.

3.2.8 Durability Factors

The HGA assembly shall be capable of withstanding environment conditions specified in Section 3.2.6 without evidence of physical damage and shall meet the performance requirements of Section 3.2.1. Damage shall be considered to be any change in the HGA assembly or components which may degrade performance.

3.2.9 Grounding, Bonding, Shielding

As defined in IS20008501, Section 3.2 and PN20008569.

3.2.10 Redundancy

The HGA assembly shall be designed to be redundant to the fullest extent required to meet the reliability specified in Section 3.2.4. Redundancy shall include cross strapping of functional electronic or electrical units within the RF electronics enclosure to achieve single fault tolerance. The configuration and redundancy path selection shall be both controlled and monitored via the C&DH subsystem control and monitor interfaces.

3.2.11 Radiation

The EOS Spacecraft shall be subjected to the radiation environments described in IS20008501. The HGA design shall include parts, materials, shielding, and circuit hardening techniques so that the HGA assembly meets all requirements of this specification during its mission.

3.2.11.1 Single Event Upset (SEU)

The HGA shall comply with the cosmic ray charged particles and single event latchup requirements specified in IS20008501, Sections 6.4.7 and 6.4.8.

3.2.12 Plasma Discharge

The HGA shall operate without interruption or induced discharges in the plasma environments specified in IS20008501, Section 6.4.

3.2.13 Atomic Oxygen

The HGA shall be protected against excessive damage caused by atomic oxygen fluence levels associated with the 705 km orbit. Materials used to protect the HGA from atomic oxygen shall not generate contamination products as a result of the interaction with an atomic oxygen environment.

3.2.14 Meteoroid and Space Debris

An analysis shall be performed to demonstrate that the HGA assembly can withstand the meteoroid and space debris environments specified in IS20008501, Section 6.4. The P_s for the HGA assembly shall be ≥0.99 for the meteoroid/orbital debris environment.

3.2.15 Finite Element Model (FEM) Requirements

3.2.15.1 Finite Element Model Guidelines

a. MSC/NASTRAN format

b. A reduced stowed model should be as small as possible and shall not exceed 500 dynamic degrees of freedom. A full physical model of stowed and deployed shall also be submitted to GE Astro.

c. Stowed HGA model should accurately represent all dynamic modes up to 100 Hz when rigidly supported at the interface between the HGA and its secondary supporting structures.

d. The HGA coordinate system must be rectangular with the same orientation as the Spacecraft coordinate system. Coordinate system definition bulk data cards must be provided to establish the HGA system. The origin of the HGA local coordinate system shall be documented in the HGA finite element model documentation.

e. All constraints internal to HGA and output must be in the HGA local coordinate system. There should be no constraints external to the model upon submittal.

f. The NASTRAN bulk data deck should not contain BAROR, GRDSET, or PARAM AUTOSPC NASTRAN cards.

g. The specification of vector components for element coordinate system definition shall be used in lieu of referenced grid (i.e., CBAR, CBEAM).

h. U.S. customary system of units shall be used. All mass data must be input in pounds (weight) units and converted to mass units (lbs–sec^2/in) by using a PARAM WTMASS card. All length data must be in inches, time data in seconds, and weight data in pounds.

i. A HGA unique numbering system for all NASTRAN model identification numbers is to be used (for grids, coordinate systems, elements, property and material IDs as well as constraint and loading IDs). The grids, elements, properties, and materials IDs shall be between 70,001 and 79,999 and the coordinate system IDs shall be defined in all NASTRAN GRID cards. Do not leave blank or default entries in field numbers 3 and 7 of the GRID cards. No ID duplications are allowed.

j. The NASTRAN model must be capable of representing different dynamic response characteristics (if any) resulting from planned configuration changes between launch, and deployment.

3.2.15.2 Deliverable NASTRAN Model Data

The following data and information shall be supplied in fulfillment of the requirement of a deliverable NASTRAN math model:

a. NASTRAN structural math models of the HGA which

   1. define the loads at the HGA support structure interface due to gravity loads and structural element temperature changes (full model).

   2. are of sufficient detail to accurately represent the dynamic loads at the HGA support structure interface up to 100 Hz. The reduced math model submitted should be able to reproduce within 5 percent the same natural frequencies up to 100 Hz, as the detailed math model. If this requirement cannot be met with less than 500 dynamic degrees–of–freedom, special arrangements must be made with GE Astro.

b. NASTRAN BULK DATA deck on tape or floppy disk. Tape should be 9–track and recorded at 1600 bpi and the data must be formatted in 80–character blocked records. The method of data transferal is negotiable with GE Astro.

c. Description of the model, assumptions made, any special modeling features used, and rationale for the modeling methodology.

d. List of all material properties used in the model (full model).

e. Provide a description of the dynamic ASET degrees–of–freedom (if used).

f. Detailed plots of the NASTRAN model clearly showing all grid points, element numbers, and element types. Hardcopy plots showing element connectivity shall also be supplied.

g. Mechanical and functional description of all mechanisms in the HGA assembly modeled or not.

h. Copy of the stress analysis report is to be delivered at the verification load cycle.

3.2.15.3 Deliverable Model Validity Checks

The following computer runs and data checks shall be made and delivered to GE Astro to confirm the mathematical validity of the model:

a. Static analysis for unit gravity loading in each of the three axis directions. Sum of reaction forces in each direction axis from given by this analysis should equal the weight of the structure as given by this analysis should equal the weight of the structure as given by the gridpoint weight generator (using PARAM WTMASS card with weight–to–mass conversion factor to be 0.002588). No large displacements or forces should be generated.

b. Eigenvalue analysis for modes up to 150 Hz for stowed HGA and 20 HZ for deployed HGA with the HGA constrained at the HGA/support structure interface. Only those degrees of freedom actually used to attach the HGA to the support should be constrained in this analysis.

c. Eigenvalue analysis for the modes up to 150 Hz for stowed HGA and 20 Hz for deployed HGA in the free–free (unconstrained) condition. This analysis should be made both with and without the SUPORT NASTRAN bulk–data card. The rigid body modes from the analysis without the SUPORT card should yield frequencies less than 0.01 Hz for stowed HGA and 0.00001 HZ for deployed HGA.

d. Static analysis with unit–enforced displacements in all six degrees of freedom at one grid point. This analysis should yield equivalent unit values of displacement for all grid points whose displacement coordinate system is defined as being parallel to the input coordinate system of the referenced point. In addition, no element forces greater than 0.1 pound of moments greater than 1.0 inch–pound should be observed. A grid–point force balance should reveal no significant forces on any point in the model.

e. Grid–point weight generator (using PARAM WTMASS card) should yield correct weight, center of mass locations, and moments of inertia.

f. Use of case control command "SPCFORCES=ALL" should revel no constraint forces at points other than legitimate boundary condition constraint points.

g. "Epsilon Sub E" error check for each static subcase should be less than 10E–11.

h. Static analysis with a unit temperature increase from ambient.

3.2.15.4 NASTRAN Model Verification

The NASTRAN finite element model shall be verified using the modal testing results. The NASTRAN model frequency predictions shall agree with dynamic test data to within 5 percent for the first fundamental modes and 10 percent for all other significant structural modes up to 80 Hz. A significant structural mode is defined as a mode which possesses the modal weight equal to or greater than 10 percent of the total subsystem weight. A cross–orthogonality check between test and analytical modes to establish adequacy of a NASTRAN test–verified dynamic model may be required subjected to the conditions specified in Section 3.2.15.4.1.

3.2.15.4.1 Modal Survey Testing

A modal survey shall be performed on the HGA assembly to identify resonant frequencies. A test–verified NASTRAN model frequency prediction shall agree with the test data according to criteria set forth in the previous subsection. A cross–orthogonality check between test and analytical modes may be required subjected to the following conditions:

a. If the first modal frequency is greater than 80 Hz, only the NASTRAN model lowest frequency must agree with dynamic test data within 5 percent.

b. If the first modal frequency is equal to or below 80 Hz, NASTRAN model must be verified using the modal testing results for both frequencies and mode shapes. The cross–orthogonality check between test and analytical modes is therefore required to demonstrate adequacy of the modal correlation of the NASTRAN test–verified model.

If the modal testing is required to determine both modal frequencies and mode shapes, the following criteria shall be met:

Modal Test Success Criteria

Self–orthogonality check between test mode shapes, with respect to the analytical mass matrix, shall be used as the final test success criteria. The success criteria shall be a maximum of 15 percent coupling between any test significant mode shapes below 80 Hz. The self–orthogonality check shall be performed as follows:

$$\{f\}^T_e\ [M]_a\ \{f_e\} = [\text{ORTHO}] \qquad \{f_e\} = \text{normalized mode shape}$$

The mode shapes are normalized such that, ORTHO (j,j) = 1.0. Therefore, the test goal for coupling is that the off diagonal terms ORTHO(i,j) be ≤ 0.15.

Modal Correlation Criteria (Cross–Orthogonality Check Criteria)

Modal correlation criteria or cross–orthogonality check criteria between test mode shapes and NASTRAN–predicted mode shapes, with respect to the analytical mass matrix, shall be used as the acceptability criteria for the test–verified NASTRAN dynamic model. The success criteria objective should be better than 90 percent for the same modes (diagonal terms equal to or greater than 0.9) for the significant structural modes.

Testing shall be conducted on the HGA in stowed configuration rigidly supported at the component box interfaces.

3.2.16 Thermal Math Models

The subcontractor shall construct a minimum of three math models relating to the thermal design and analysis of their assembly.

Two of these models, the surface model and the reduced node thermal model, shall be deliverable items, as they will be incorporated into GE Astro Spacecraft models for overall Spacecraft analysis. These models will be updated several times during the design phase of the assembly, and the final model will be required after thermal balance testing of the assembly has been completed.

The surface models will be incorporated into a surface model of the Spacecraft. This integrated surface model will be subjected to simulations of various mission thermal environments including system level testing, launch, transfer orbit, and operational orbit. The principal end–products of the analysis are the radiation couplings and absorbed heat fluxes. The radiation interchange includes direct contributions from the sun, albedo and Earth as well as the intra–network reflections and shadowing of this energy. The radiant flux from solar, Earth infrared, and albedo energy sources, which is absorbed by each surface, will be computed for each mission mode. The results of this unified environmental flux study will be available for use by the subcontractor for detailed thermal analysis of the assembly design and flight predictions.

The assembly reduced node thermal model will be integrated with the GE Astro Spacecraft thermal model in order to study the thermal response of the entire Spacecraft when it is subjected to various environments and modes of operation. The resulting heat transfer and temperatures at the assembly interfaces will provide the flight prediction boundary conditions for detailed assembly thermal models.

A detailed thermal math model of the assembly shall also be developed by the subcontractor with the objective of demonstrating that all internal assembly thermal requirements are met for all expected mission modes and testing. Although the model itself is not a deliverable item, a nodal description and the results of the analysis using the model shall be delivered to GE Astro as a test of the adequacy of the reduced node thermal model and a means of making flight assembly predictions. The subcontractor shall use the detailed thermal model to predict and analyze the results of the assembly level thermal balance test, resulting in a validation of the math model.

3.2.16.1 Surface Model Requirements

a. The reduced surface models shall be delivered in Thermal Radiation Analyzer System (TRASYS22) format.

b. The models shall be as small as is reasonably possible. The total number of surfaces is dependent on geometric complexity, but should not exceed 50 surfaces.

c. The surface models shall form a completely closed volume. Even the surface area which is used for mechanical attachment to the Spacecraft shall be represented by a surface. For example, a simple rectangular electronics package is represented by six rectangles.

d. In general, each external node of the assembly reduced node thermal model and detailed thermal model shall be represented by a surface or set of surfaces in the surface model. Any surface of special interest (i.e., a radiator) shall be modeled separately.

e. The local coordinate system shall be rectangular with the same orientation as the Spacecraft coordinate system. The origin of the local coordinate system shall be documented in ICD20008513.

f. All length dimensions shall be input in inches.

g. Node numbering shall start at 9800.

3.2.16.1.1 Required Deliverable Surface Model Documentation

The following information and data shall be supplied in fulfillment of the requirement of a deliverable TRASYS surface model:

a. A table shall be supplied which lists each surface with:

   1. A brief description;

   2. The node number in the model;

   3. The area in square inches;

   4. The surface materials; and

   5. The beginning–of–life and end–of–life values of solar absorptivity and IR emissivity of the surface materials, including thermal blanket outer layers. The values of the thermo–optical properties shall include tolerances for uncertainties and degradation.

b. A sample run of the TRASYS surface model of the assembly shall be supplied, assuming the worst EOL hot case with the assembly operational. The TRASYS input deck shall be provided both as a hardcopy and on magnetic tape, and the bulk data shall be provided on magnetic tape only. The files which shall be included on the tape include <filename>.INP, <filename>.LP, and <filename>.BCD. The following are acceptable formats for transmittal of thermal model input and outputs:

   1. If a VMS system is used, information shall be transmitted on a 9 track magnetic tape recorded at 1600 or 6250 bpi, and formatted in 80 character blocked records. The format may be either the VMS backup save set format, TK50, TK70, or TA90. If one of the fixed formats is not used, the 80 character records shall be blocked using an optional blocking factor no greater than 50, and the blocking factor shall be specified on the tape.

   2. If a UNIX system is used, information shall be transmitted on a 9 track magnetic tape recorded at 1600 or 6250 bpi, and formatted in 80 character blocked records. TAR format shall be specified.

3. If a Sun UNIX system is used, information shall be transmitted on a TAR file written on a 2.3 Gbyte 8 mm cartridge tape, or a 1.44 Mbyte 3 1/2 in. floppy disk. The transmittal shall be compatible with Sun OS 4.1.1 or a later operating system.

4. Information may also be transmitted on an IBM compatible PC, DOS formatted 1.44 Mbyte 3 1/2 inch floppy disk.

c. Description of the model, any special modeling features used, and the rationale for the modeling methodology.

d. Detailed geometric plots of the surface model clearly showing all nodes and node numbers. The coordinate axes shall be clearly marked.

3.2.16.2 Reduced Node Thermal Model Requirements

The deliverable reduced node thermal model is a reduced version of the detailed thermal model. It shall provide similar results to the detailed model in the areas of interface heat flow (both radiation and conduction) and average temperatures of all components modelled.

a. The reduced node thermal model shall be delivered in Systems Improved Numerical Differencing Analyzer (SINDA) SINDA85 or SINDA87 format.

b. The model shall be capable of steady–state and transient analysis.

c. The model shall be as small as is reasonably possible and shall not exceed 50 nodes. The node numbering sequence allocated for the HGA assembly starts with 9800 and ends at 9850.

d. All length dimensions shall be input in inches. All heat energy data shall be input in watts. Time units shall be in minutes. The Celsius temperature scale shall be used.

e. The overall energy balance summation of the reduced node thermal model with its boundaries shall agree with the detailed thermal model to 5°C or better for any set of boundary conditions and internal power dissipations.

f. The heat transferred by conduction or radiation from node to node of the reduced node thermal model shall agree with the heat transferred from the corresponding nodes in the detailed thermal model to within 5°C for any set of boundary conditions and internal power dissipations.

g. The temperature relationship between each flight temperature sensor and the reduced node thermal model node which contains the flight sensor shall be provided.

h. Power distribution and time–lines shall be provided for each expected mode of the mission and for ground testing.

i. Each external node of the reduced node thermal model shall have a one–to–one correspondence with a surface or group of surfaces from the surface model.

3.2.16.2.1 Required Deliverable Reduced Node Thermal Model Documentation

The following information and data shall be supplied in fulfillment of the requirement of a deliverable reduced node thermal model. GE Astro will provide a reduced model of the surroundings to support the generation of the subcontractor's model.

a. A table shall be supplied which lists the following information for each surface modeled in the TRASYS surface model that appears in the reduced node model:

   1. A brief description;
   2. The node number in the model;
   3. The area in square inches;
   4. The surface materials; and
   5. The beginning–of–life and end–of–life values of solar absorptivity and IR emissivity of the surface materials including thermal blanket outer layers. The values of the thermo–optical properties shall include tolerances for uncertainties and degradation.

b. A table shall be provided which lists the node number, a brief description, the mass (lbm), the specific heat (J/lbm/#C), and the relationship to flight temperature sensors. All tables and lists of data shall have units clearly stated.

c. A descriptive list of the internal radiation and conduction couplings. Conduction couplings shall include a description of calculations, including material properties, assumptions made, and sketches.

d. Maximum and minimum electrical power consumed and thermal dissipation, if different. Thermal dissipation for each node for all operating mode (including survival), duty cycle, and effects of bus voltage variations should be included.

e. The following information relating to assembly thermal control heaters shall be supplied.

   1. Type of control (i.e., on/off ground command, thermostatic or proportional);
   2. Nodes where heat is dissipated;
   3. The node used for control;
   4. Operating temperature limits; and
   5. Rated power at applied voltage.

f. A table shall be provided listing the relationship between the external nodes of the reduced node thermal model and the surfaces of the TRASYS surface model.

g. Any engineering assumptions made to reduce the model's complexity or to enhance the accuracy shall be stated. Any nodes using adiabatic surfaces or arithmetic nodes (zero mass nodes) shall be noted.

h. A table shall be provided which lists the maximum and minimum temperatures for each node for normal operating conditions, standby mode, and survival.

i. A sample run with an appropriate orbital environment shall be supplied to provide a set of reference temperatures that can be compared with the model as it will be used in the Spacecraft model. In the sample run, the assembly shall be modeled as at normal operation under hot case end–of–life conditions with a beta angle of 31 degrees.

j. All calculations necessary to analytically verify that the design satisfies the thermal requirements defined in the GIS and the assembly performance spec must be included. Any assumptions that must be made to facilitate the analysis shall be clearly stated. A written report including an abstract and a statement of conclusions and/or recommendations should accompany these calculations.

k. The SINDA input deck used for the sample run shall be provided both as hard copy and on magnetic tape, and the bulk data shall be provided on tape only. The files which shall be included on the tape include <filename>.DAT and <filename>.OUT. The following are acceptable formats for transmittal of thermal model input and outputs:

   1. If a VMS system is used, information shall be transmitted on a 9 track magnetic tape recorded at 1600 or 6250 bpi, and formatted in 80 character blocked records. The format may be either the VMS backup save set format, TK50, TK70, or TA90. If one of the fixed formats is not used, the 80 character records shall be blocked using an optional blocking factor no greater than 50, and the blocking factor shall be specified on the tape.

   2. If a UNIX system is used, information shall be transmitted on a 9 track magnetic tape recorded at 1600 or 6250 bpi, and formatted in 80 character blocked records. TAR format shall be specified.

   3. If a Sun UNIX system is used, information shall be transmitted on a TAR file written on a 2.3 Gbyte 8 mm cartridge tape, or a 1.44 Mbyte 3 1/2 in. floppy disk. The transmittal shall be compatible with Sun OS 4.1.1 or a later operating system.

   4. Information may also be transmitted on an IBM compatible PC, formatted 1.44 Mbyte 3 1/2 inch floppy disk.

3.2.16.3 Guidelines for the Detailed Assembly Thermal Model

The detailed thermal model of the assembly is a mathematical representation of the heat transferred within the assembly and exchanged with the assembly's surroundings. This model accurately predicts the change in the heat flows and the resulting temperature changes for any alteration in the environment, internal power dissipation, or any other model parameter.

a. SINDA85 or SINDA87 are the preferred thermal analysis software on which the model shall be based.

b. The size of the detailed thermal model is highly dependent on the thermal limits of the hardware being modeled. As a minimum, the detailed model shall demonstrate that all defined requirements for temperature and temperature gradients are met.

c. Every critical component or subassembly of the assembly and every flight temperature sensor should be represented by a node which adequately predicts its temperature.

d. For convenience, it is recommended that each external node have a one–to–one correspondence with a surface or group of surfaces from the TRASYS surface model.

e. Submodels may be used as required for finer thermal definition of local areas of the assembly.

3.2.16.3.1 Required Deliverable Detailed Assembly Thermal Model Data

a. A list shall be provided of all nodes and nodal descriptions. Sketches showing how nodes correspond to assembly components shall be included.

b. Analysis results for all major mission conditions and operating modes considered shall be provided.

3.2.17 GSE Requirements

3.2.17.1 Electrical Ground Support Equipment (EGSE)

The EGSE test equipment for testing the HGA at GE Astro is intended to provide a reasonable level of confidence that the HGA has survived shipment from the subcontractor to GE Astro. The test is to be performed by the subcontractor's personnel (GE Astro support provided as required) with the subcontractor to provide GSE. The testing should demonstrate a full range of motion of the gimbal. It should send every HGA command via redundant command paths and verify proper telemetry response. The test should verify proper operation of all redundant circuitry and/or components. The test should verify all command and data paths to, from, and between components. A simple verification of the RF link (power and frequency) shall also be demonstrated (it is acceptable to use GE Astro GSE for the RF testing). It is not necessary, as part of this test, to verify proper HGA performance with regard to every requirement. (List of EGSE in SOW.)

3.2.17.2 Mechanical Ground Support Equipment (MGSE)

MGSE shall be provided to allow post shipment checkout of the HGA assembly. MGSE attachment points will be provided by the vendor. (List of MGSE in SOW.)

3.3 Design and Construction

3.3.1 Materials, Processes, and Parts

All materials, processes, and parts utilized in the design and construction of the HGA assembly used on the EOS Program shall be selected and controlled in accordance with 20004280. In addition, all program approved materials and processes shall be selected and controlled in accordance with the Program Authorized Materials and Processes List, 20008650. All program approved parts utilized on the EOS Program shall be in accordance with the Program Authorized Parts List, 20008648.

3.3.1.1 Approved Standard Parts, Materials, and Finishes

Wherever possible, approved standard parts and materials shall be used. Approved standard parts, derating factors and screening are listed in 20008648. Approved standard materials are listed in 20008650. Approved standard finishes are listed in 20008650. Application of materials and finishes shall be in accordance with 20008650.

3.3.1.2 Approval of Non–Standard Parts, Materials, and Finishes

Parts, materials, or finishes which are not approved standard items must be submitted for approval, as early as possible in the design phase, in accordance with 20004280.

3.3.1.3 Parts, Materials, and Finishes List

A parts, materials and finishes list shall be submitted for approval prior to the Critical Design Review (CDR). Each item listed shall be keyed to indicate the source of its approval, i.e., by Non–Standard Parts Approval Form or 20008648.

3.3.1.4 Properties of Materials

For design purposes, material structural properties for metals shall be in accordance with MIL–HDBK–5 and for plastics, in accordance with MIL–HDBK–17, parts 1 and 2. Properties not given in these documents shall be obtained from other published data or by testing the materials.

3.3.1.5 Stress Corrosion

Metallic materials shall be chosen using the information contained in MIL–STD–889A regarding corrosion protection. In addition, materials that do not meet the requirements of GSFC–SPEC–522 to control stress corrosion cracking shall be considered non standard and a request for their use must be made in accordance with 20004280.

3.3.1.6 Fracture Mechanics

All structural elements are subject to the fracture control requirements of 20004280. The subcontractor may use the GE Fracture Control Implementation Plan 20008661 to satisfy these requirements.

3.3.1.7 Dissimilar Metals

Dissimilar metals, as defined in MIL–STD–889A shall not be used in direct contact unless suitably protected against electrolytic corrosion.

3.3.1.8 Magnetic Metals

Magnetic metals shall only be used where necessary for HGA assembly operation. Materials used shall minimize the permanent, induced, and transient magnetic fields. When it is necessary to use magnetic materials, they shall be arranged in a manner such as to minimize the resultant residual dipole.

3.3.1.9 Finish

The surfaces of the HGA assembly shall be adequately finished to prevent deterioration of performance from exposure to the specified environments. Protective coatings shall not chip, crack, or scale with age or in the extremes of environmental conditions specified herein. No cadmium or zinc plating shall be used on any components.

3.3.1.10 Lubricants and Sealants

These items shall not be used unless necessary for HGA assembly, and requires prior approval.

3.3.2 Electromagnetic Radiation

The HGA assembly shall be compatible with its specified operating environment and meet the requirements of the EOS Spacecraft, as specified by the GE Astro EMI/EMC Control Plan, 20008569. The HGA assembly subcontractor shall supply an HGA EMI/EMC Control Plan in contractor format which details and documents the EMI design/manufacturing controls employed in the HGA.

3.3.3 Nameplates and Product Marking

Each item of deliverable hardware shall be permanently marked or tagged in accordance with the requirements of 20004280. Nameplates, if used, shall be permanently affixed to the hardware. It is the responsibility of the subcontractor to make the nameplate easily readable, easily accessible, and nondetachable. GE Astro will provide serial numbers to be assigned to each component, as required.

3.3.4 Workmanship

The HGA assembly shall be fabricated and finished in a manner that satisfies accepted criteria of appearance and neatness. Particular attention shall be given to neatness and thoroughness of soldering, wiring, marking of parts and assemblies, welding, brazing and freedom from burrs, sharp edges and loose materials, and shall be in accordance with [NHB 5300.4].

3.3.5 Interchangeability

Like components shall be functionally and physically interchangeable without degradation of critical item functions below limits specified herein. Each component shall be directly replaceable in form, fit, and function by other components of the same part number.

3.3.6 Safety

The HGA assembly shall comply with safety requirements of 20004280.

3.3.6.1 Personnel

Personnel safety shall be considered in all phases of the design, manufacturing, testing, and use.

3.3.7 Human Performance/Human Engineering

The design of the HGA assembly shall consider reasonable standards of human engineering practice in order to minimize the potential for human error during assembly, handling, test and shipping.

3.4 Documentation

All documentation, specifications, drawings, plans, and procedures shall satisfy the requirements of 23001146.

3.5 Logistics

N/A

3.5.1 Maintenance

N/A

3.5.2 Supply

N/A

3.6 Precedence

The order of precedence shall be as defined in WS20008513.

4 QUALITY ASSURANCE PROVISIONS

4.1 General

The requirements for the formal verification of the performance, design and construction of the supplied equipment shall be as specified in this section. These requirements define the extent to which the equipment must demonstrate capability to meet the design and performance requirements specified in Section 3 of this document. The subcontractor's Quality Assurance Program shall be in accordance with 20004280. The subcontractor's plan shall address materials and processes, parts, safety and reliability per 20004280.

The requirements detailed in this section address verification responsibilities, methods, phases, levels and documentation. Also included are certification and implementation requirements and a requirements versus verification cross reference matrix.

For procured items, paragraphs represent the minimum verification requirements. The supplier may also perform verifications of selected requirements in additional phases, utilizing additional methods and/or at additional levels than defined herein. Any additional verification shall conform to the method, phase and level definitions contained herein.

4.1.1 Responsibility for Verification

The subcontractor shall verify compliance with all requirements specified in Section 3 of this document, as modified by the Statement of Work.

4.1.2 Testing Locations

Unless otherwise specified in the procurement order, verification shall be conducted at the Subcontractor's facility. Post shipment acceptance testing (demonstrating survival of transportation) shall be performed at the GE Astro facility by the subcontractor. The supplier shall inform GE Astro of all test schedules; GE Astro reserves the right to witness all verification testing. GE Astro will not delay a test for witness purposes unless a request for delay is made in writing.

4.1.3 Special Tests and Analysis

4.1.3.1 Torsional Stiffness Test

The calculated torsional stiffness of each gimbal drive assembly shall be verified by test.

4.1.3.2 Release Mechanical Test

The subcontractor shall be responsible for demonstrating by test the survivability of the HGA subsystem during actuation of the release mechanisms, i.e., pyro firing.

4.1.3.3 Random Vibration Analysis

A random vibration analysis shall be performed for any component or assembly that will undergo random vibration prior to test.

4.2 Verification Methods

Verification of each Section 3 requirement shall be performed as defined in the verification cross reference index, Table IX of this specification. Each method shall be as defined in PS20005404, Section 3.2.

4.3 Verification Phases

Verification of each Section 3 requirement shall be performed at each phase specified in the verification cross reference index, Table IX of this specification. Each method shall be as defined in PS20005404, Section 3.3.

4.3.1 Protoflight Hardware

The HGA assembly used for protoflight qualification shall be tested in accordance with the design requirements of this specification and the applicable test requirements stated in PS20005404, Section 6.

4.3.1.1 Protoflight Test Levels

The protoflight test levels and durations shall be as specified in PS20005404 except as modified herein.

4.3.1.2 HGA Assembly Protoflight Tests

The HGA assembly protoflight minimum test baseline consists of all the required tests specified in Table VIII. The flight version of the computer software shall be resident in the HGA assembly controller for these tests. The requirements for comprehensive and functional testing shall be as specified in Table VIII and PS20005404, Section 6.5.1. When specific requirements in Section 3.2 cannot be directly verified, the subcontractor's verification test plan shall derive the detailed test requirements.

4.3.2 Flight Hardware

The HGA assembly built as flight hardware shall be tested in accordance with the design requirements of this specification and the applicable test requirements stated in PS20005404, Section 6. The fight hardware shall demonstrate successful performance at acceptance levels in acoustic, vibration, and thermal environments as specified in Tables VIII and IX.

4.3.2.1 Flight Test Levels

The flight test levels and durations shall be as specified in PS20005404 except as modified herein.

4.3.2.2 HGA Assembly Flight Tests

The HGA assembly flight test baseline consists of all the required tests specified in Table VIII. The flight version of the computer software shall be resident in the HGA assembly controller for these tests. The verification of the operational requirements of Section 3.2.1.1 shall be performed at the temperature extremes of the thermal vacuum test.

Table VIII. HGA Assembly Protoflight/Flight Tests (TBR–24)

Test	Suggested Sequence(1)
Comprehensive Checkout	1
Gimbal Shaft Encoder Calibration	1A
EMC	2
Thermal Balance	5(2)
Thermal Vacuum	6
Acoustic Vibration	3(2)
Sine	4
Mass Properties	7
Pyro Shock	8(2)
Magnetics	9
Comprehensive Checkout	10
Post Delivery Checkout (@ GE Astro)	11

Notes: (1) Electrical and Mechanical functional tests shall be conducted prior to and following each environmental test.
(2) Protoflight test only.

4.4 Verification Environment

4.4.1 Test Equipment Verification

Unless otherwise specified herein, instruments and test equipment used to measure performance characteristics shall have an accuracy equal to or better than one–tenth the tolerance for the variable to be measured. When conditions prohibit such instrumentation accuracies or when only minimum or maximum values are specified, the measurement limit shall be adjusted to compensate for the calibration limit of uncertainty.

4.4.2 Verification Conditions

Unless otherwise specified herein, all verification tests shall be conducted at ambient conditions of temperature, humidity, and pressure prevailing at the test facility.

4.5 Verification Documentation

The verification process shall be documented by plans, procedures and reports. An end item data package is required for the HGA assembly. A certificate of compliance is required with each item data package. Minimum requirements for this package are specified in 20004280. The Subcontractor shall provide a verification matrix that provides a cross reference between the requirements of this specification and the Subcontractor's test procedures, inspection records and analyses.

(This page intentionally left blank.)

5 PREPARATION FOR DELIVERY

5.1 Packaging and Preservation

Upon completion of all tests by the manufacturer, each device shall be placed in an individual handling container which provides protection at all handling points between the manufacturer's final inspection and users final installation. The external packaging for delivery shall insure that delivery by common carrier shall not result in physical damage, corrosion, or other deterioration or degradation resulting in unserviceable devices. All handling, storage, preservation, packaging and shipping shall be in accordance with 20004280.

5.2 Marking for Shipment and Storage

Interior and exterior shipping containers shall be marked in accordance with MIL–STD–129D and 20004280.

(This page intentionally left blank.)

6 NOTES

6.1 Definitions

6.2 Abbreviations and Acronyms

APC	Antenna Pointing and Control
BDU	Bus Data Unit
BER	Bit Error Rate
BOL	Beginning of Life
bps	bits per second
BRF	Band Reject Filter
C	Celsius
CCSDS	Consulting Consortium of Space Data Systems
C&DH	Command and Data Handling Subsystem
CDR	Critical Design Review
CEI	Contract End Item
CFP	Customer Furnished Property
CG	Center of Gravity
CMD	Command
COMM	Communications Subsystem
CPU	Central Processing Unit
CTIU	Command/Telemetry Interface Unit
dc	Direct Current
dB	decibel
EGSE	Electrical Ground Support Equipment
EIRP	Effective Isotropic Radiated Power
EOL	End of Life
EMC	Electromagnetic Compatibility

EMI	Electromagnetic Interference
EPS	Electrical Power System
ESD	Electrostatic Discharge
FMEA	Failure Modes Effects Analysis
FOV	Field of View
FRR	Final Requirements Review
FS	Factor of Safety
FSE	Flight Support Equipment
g	Acceleration of Gravity
GDA	Gimbal Drive Assembly
GFE	Government Furnished Equipment
GHz	Giga Hertz
GMT	Greenwich Mean Time
GN&C	Guidance, Navigation, and Control
GPS	Global Positioning System
GPS R/P	GPS Receiver/Processor
GSE	Ground Support Equipment
HGA	High Gain Antenna
HPA	High Power Amplifier
Hz	Hertz
ICD	Interface Control Document
IF	Intermediate Frequency
I/O	Input/Output
KBM	Ku–band Modem
Kbps	kilobits per second
kHz	Kilohertz
KSA	Ku–band Single Access

LNA	Low Noise Amplifier
LPC	Load Power Conditioner
Mbps	Megabits per second
Msps	Megasymbols per second
MHz	Megahertz
MLI	Multi–Layer Insulation
MS	Margin of Safety
N/A	Not Applicable
NASA	National Aeronautics and Space Administration
PDR	Preliminary Design Review
P/L	Payload
PMO	Program Management Office
P_s	Probability of Success
PROM	Programmable Read Only Memory
PSC	Premodulation Signal Conditioner
QPSK	Quadrature Phase Shift Keying
RAM	Random Access Memory
ROM	Read Only Memory
RF	Radio Frequency
RFI	Radio Frequency Interference
R/P	Receiver Processor
RPC	Remote Power Controller
RT	Remote Terminal
SBT	S–band Transponder
SCC	Spacecraft Control Computer
SMA	S–band Multiple Access
SPA	S–band Power Amplifier

SSA	S–band Single Access
TBD	To be determined
TBR	To be reviewed
TBS	To be supplied
TCS	Thermal Control Subsystem
TDRSS	Tracking and Data Relay Satellite System
TLM	Telemetry
TMM	Thermal Math Model
TR	Tape Recorder
USO	Ultrastable Oscillator
VSWR	Voltage Standing Wave Ratio

6.3 Miscellaneous Notes

None.

6.4 Requirements Traceability Matrix

Requirements shown in Section 3 and 4 of this specification were derived from the source documents shown in the Requirements Traceability Matrix, Attachment B (provided under separate cover).

Table IX. Verification Cross Reference Index

Section 3		Section 4			
Paragraph	Specification Requirement	Verification Method	Verification Test Category Phase	Hardware Test Category	Remarks
3	REQUIREMENTS				
3.1	Critical Item Definition	N/A			
3.1.1	Item Diagrams	N/A			
3.1.2	Interface Definition	N/A			
3.1.2.1	Functional Interface	N/A			
3.1.2.1.1	Communications Subsystem Interface	5,4	C,D	1	
3.1.2.1.1.1	TDRSS Ku–band Return Link	N/A			
3.1.2.1.1.2	TDRSS Ku–band Forward Link (for Calibration Receiver)	5	C,D	1	Cal. Rx. optional
3.1.2.1.2	C&DH Interfaces	3,5	C,D	1	
3.1.2.1.2.1	Remote Terminal Interface	5,4	C,D	1	
3.1.2.1.2.2	RT Terminal Address Assignment	5	C,D	1	
3.1.2.1.3	Power Systems Interface	N/A			
3.1.2.2	Physical Interface	3,4	C,D		

Verification Method:
1 Similarity
2 Analysis
3 Inspection
4 Demonstration
5 Test
N/A Not Applicable
TBD (To Be Determined)

Verification Test Category Phase:
A Development
B Prototype
C Acceptance
D Protoflight
E Integrated Systems
F Prelaunch Checkout

Hardware Test Category
1 Comprehensive
2 Functional
3 Limited Functional
4 Post Delivery Checkout

Table IX. Verification Cross Reference Index

Section 3		Section 4			
Paragraph	Specification Requirement	Verification Method	Verification Test Category Phase	Hardware Test Category	Remarks
3.1.2.2.1	Structure/Mechanisms Interfaces	3	D		
3.1.2.2.1.1	Gimbal Drive	5,4,3	C,D	1	
3.1.2.2.2	Thermal Control Interfaces	5,2	D	(Part of Thermal	
3.1.2.2.2.1	Radiative Interfaces	2	D	balance/	
3.1.2.2.2.2	Conductive Interfaces	2,5	D	TV test)	
3.1.2.2.3	Ground Support Equipment (GSE) Interfaces	N/A			
3.1.3	Major Component List	N/A			
3.1.4	Government Furnished Property List	N/A			
3.1.5	Government Loaned Property List	N/A			
3.1.6	Customer Furnished Property (CFP) List	N/A			
3.2	Characteristics	N/A			
3.2.1	Performance	N/A			
3.2.1.1	Electrical Performance	N/A			

Verification Method:
1 Similarity
2 Analysis
3 Inspection
4 Demonstration
5 Test
N/A Not Applicable
TBD (To Be Determined)

Verification Test Category Phase:
A Development
B Prototype
C Acceptance
D Protoflight
E Integrated Systems
F Prelaunch Checkout

Hardware Test Category
1 Comprehensive
2 Functional
3 Limited Functional
4 Post Delivery Checkout

Table IX. Verification Cross Reference Index

Section 3		Section 4			
Paragraph	Specification Requirement	Verification Method	Verification Test Category Phase	Hardware Test Category	Remarks
3.2.1.1.1	Ku–band Antenna	5	C,D	1	
3.2.1.1.2	Ku–band Earth Power Flux Density	2,5	C,D	1	
3.2.1.1.3	Ku–band Electronics	5	C,D	1,2,3,4	Test category 3: IF and RF freq, 3 dB BW
3.2.1.1.4	Calibration Receiver	5	C,D	1,2,3,4	Cal Rx optional
3.2.1.1.4.1	Output Signal Characteristics	5	C,D	1,2,3,4	
3.2.1.1.4.2	System Performance Characteristics	5	C,D	1,2	
3.2.1.1.5	Ku–band Test Coupler	5	C,D	1,2,3,4	
3.2.1.1.6	S–band Antenna	5	C,D	1,2,3	Test category 2: power handling and VSWR
3.2.1.1.7	Antenna Pointing and Control	4	C,D		

Verification Method:
1 Similarity
2 Analysis
3 Inspection
4 Demonstration
5 Test
N/A Not Applicable
TBD (To Be Determined)

Verification Test Category Phase:
A Development
B Prototype
C Acceptance
D Protoflight
E Integrated Systems
F Prelaunch Checkout

Hardware Test Category
1 Comprehensive
2 Functional
3 Limited Functional
4 Post Delivery Checkout

Table IX. Verification Cross Reference Index

Section 3		Section 4			
Paragraph	Specification Requirement	Verification Method	Verification Test Category Phase	Hardware Test Category	Remarks
3.2.1.1.7.1	Antenna Modes of Operation	5	C,D	1,2,3,4	Thermal .distortion test not included
3.2.1.1.7.2	Pointing Accuracy	2,5	C,D	1	
3.2.1.1.7.3	Control of RF and Other Components	5,4	C,D	1,2,3,4	
3.2.1.1.7.4	Embedded Processing Requirements	5,4	C,D	1,2	
3.2.1.1.7.4.1	High Order Language	3	C,D		
3.2.1.1.7.4.2	1553 Message Handling	5,4	C,D	1	
3.2.1.1.7.5	Command Reception and Execution	5,4	C,D	1	
3.2.1.1.7.5.1	On–Demand Command Execution	5,4	C,D	1	
3.2.1.1.7.5.2	Antenna Drive Commands	5,4	C,D	1	
3.2.1.1.7.5.3	Equipment Safety	5,4	C,D	1	
3.2.1.1.7.6	Telemetry	5,4	C,D	1	

Verification Method:
1 Similarity
2 Analysis
3 Inspection
4 Demonstration
5 Test
N/A Not Applicable
TBD (To Be Determined)

Verification Test Category Phase:
A Development
B Prototype
C Acceptance
D Protoflight
E Integrated Systems
F Prelaunch Checkout

Hardware Test Category
1 Comprehensive
2 Functional
3 Limited Functional
4 Post Delivery Checkout

Table IX. Verification Cross Reference Index

Section 3		Section 4			
Paragraph	**Specification Requirement**	**Verification Method**	**Verification Test Category Phase**	**Hardware Test Category**	**Remarks**
3.2.1.1.7.6.1	Gimbal Position Telemetry	5,4	C,D	1	
3.2.1.1.7.7	1553 Bus Operations and Timing	4			
3.2.1.1.7.7.1	Gimbal Control Timing	4			
3.2.1.1.7.7.2	Bus Retry	4			
3.2.1.1.7.7.3	Telemetry Sampling	4			
3.2.1.1.8	Power Characteristics	5,2	C,D	1	
3.2.1.1.8.1	Direct Current (dc) Input Voltage	3,5	C,D	1	
3.2.1.1.8.2	Direct Current Input Power	2,5	C,D	1,2,3,4	
3.2.1.1.8.3	Input Power Buses	4,5	C,D	1	
3.2.1.1.8.4	Input Power Protection	4,5	C,D	1	
3.2.1.1.8.5	Load Fault Protection	4,5	C,D	1	
3.2.1.1.8.6	Input Power Impedance	4,5	C,D	1	
3.2.1.2	Mechanical/Structural Performance	N/A			

Verification Method:
1 Similarity
2 Analysis
3 Inspection
4 Demonstration
5 Test
N/A Not Applicable
TBD (To Be Determined)

Verification Test Category Phase:
A Development
B Prototype
C Acceptance
D Protoflight
E Integrated Systems
F Prelaunch Checkout

Hardware Test Category
1 Comprehensive
2 Functional
3 Limited Functional
4 Post Delivery Checkout

Table IX. Verification Cross Reference Index

Section 3		Section 4			
Paragraph	Specification Requirement	Verification Method	Verification Test Category Phase	Hardware Test Category	Remarks
3.2.1.2.1	HGA Structural Interfaces	2,3	C,D		
3.2.1.2.2	HGA Assembly Bulkhead Interfaces	2,3	C,D		
3.2.1.2.3	HGA Assembly Interface Repeatability	2,4	C,D		
3.2.1.2.4	HGA Assembly Flange Interface	3	C,D		
3.2.1.2.5	HGA Assembly Dynamic Volume	2,3	C,D		
3.2.1.2.6	HGA Assembly Installation	2,3	C,D		
3.2.1.2.7	Reflector Removal	2,3	C,D		
3.2.1.2.8	HGA Assembly Harness	3	C,D		
3.2.1.2.9	HGA Assembly Access	3,4	C,D	1	
3.2.1.2.10	HGA Assembly Retention	3	C,D		
3.2.1.2.11	Gimbal Drive Performance	5,4	C,D	1	
3.2.1.2.12	Loads	N/A			
3.2.1.2.12.1	RF Compartment Design	2	C,D		

Verification Method:
1 Similarity
2 Analysis
3 Inspection
4 Demonstration
5 Test
N/A Not Applicable
TBD (To Be Determined)

Verification Test Category Phase:
A Development
B Prototype
C Acceptance
D Protoflight
E Integrated Systems
F Prelaunch Checkout

Hardware Test Category
1 Comprehensive
2 Functional
3 Limited Functional
4 Post Delivery Checkout

Table IX. Verification Cross Reference Index

Section 3		Section 4			
Paragraph	Specification Requirement	Verification Method	Verification Test Category Phase	Hardware Test Category	Remarks
3.2.1.2.12.2	Acceleration	2,5	C,D		Load cases 1,2, and 3 will be tested
3.2.1.2.12.3	Margins of Safety	2,5	C,D		Use data from component test
3.2.1.2.12.4	Launch and Operational Loads	5 (Pyro)	D		Pyro: PFM only
3.2.1.2.12.5	Gimbal Load Path Bypass	2,5	C,D		Use data from component test
3.2.1.2.12.6	Deployed Loads	2	C,D		Test at component level
3.2.1.2.13	Stowed Natural Frequency	2,5	C,D		Use data from component test
3.2.1.2.14	Deployed Natural Frequency	2	C,D		Use data from component test

Verification Method:
1 Similarity
2 Analysis
3 Inspection
4 Demonstration
5 Test
N/A Not Applicable
TBD (To Be Determined)

Verification Test Category Phase:
A Development
B Prototype
C Acceptance
D Protoflight
E Integrated Systems
F Prelaunch Checkout

Hardware Test Category
1 Comprehensive
2 Functional
3 Limited Functional
4 Post Delivery Checkout

Table IX. Verification Cross Reference Index

Section 3		Section 4			
Paragraph	Specification Requirement	Verification Method	Verification Test Category Phase	Hardware Test Category	Remarks
3.2.2	Operational Modes	2	C,D		
3.2.3	Physical Characteristics	N/A			
3.2.3.1	Weight Limits and Mass Properties	N/A			
3.2.3.1.1	HGA Weight	5	C,D		
3.2.3.1.2	HGA Mass Properties	2,5	C,D		Test in one position only
3.2.3.2	Dimension Limitations	3	C,D		
3.2.3.3	Software Requirements	3	C,D		
3.2.3.3.1	Processor Throughput, I/O Bandwidth, and Memory Margins	2	C,D		
3.2.3.3.2	CPU, I/O, and Memory Capacities	2	C,D		
3.2.3.3.3	Software Languages	3	C,D		
3.2.3.4	Thermal	2,3,5	D		Thermal balance test: PFM only

Verification Method:
1 Similarity
2 Analysis
3 Inspection
4 Demonstration
5 Test
N/A Not Applicable
TBD (To Be Determined)

Verification Test Category Phase:
A Development
B Prototype
C Acceptance
D Protoflight
E Integrated Systems
F Prelaunch Checkout

Hardware Test Category
1 Comprehensive
2 Functional
3 Limited Functional
4 Post Delivery Checkout

Table IX. Verification Cross Reference Index

Section 3		Section 4			
Paragraph	**Specification Requirement**	**Verification Method**	**Verification Test Category Phase**	**Hardware Test Category**	**Remarks**
3.2.3.4.1	TCS Hardware	3,5	D		Thermal balance test: PFM only
3.2.3.4.2	Thermal Analysis	2	D		Thermal balance test: PFM only
3.2.3.4.3	Orbit Parameters and Environmental Constraints	3	D		Thermal balance test: PFM only
3.2.3.4.4	Launch Thermal Environment	N/A			
3.2.4	Reliability	2 or 5	D		Life Test or Qual. data
3.2.4.1	Failure Modes and Effects Analysis and Critical Items List	2			
3.2.4.2	Worst-Case Analysis	2			
3.2.4.3	Part Stress Analysis	2			
3.2.5	Maintainability	3	C,D		

Verification Method:
1 Similarity
2 Analysis
3 Inspection
4 Demonstration
5 Test
N/A Not Applicable
TBD (To Be Determined)

Verification Test Category Phase:
A Development
B Prototype
C Acceptance
D Protoflight
E Integrated Systems
F Prelaunch Checkout

Hardware Test Category
1 Comprehensive
2 Functional
3 Limited Functional
4 Post Delivery Checkout

Table IX. Verification Cross Reference Index

Section 3		Section 4			
Paragraph	Specification Requirement	Verification Method	Verification Test Category Phase	Hardware Test Category	Remarks
3.2.6	Environmental Conditions	5	C,D		
3.2.6.1	Pressure	5	C,D		
3.2.6.2	Acoustic Noise	5	D		
3.2.6.2.1	Random Vibration	2,5	C,D		Random test on component only
3.2.6.3	Shock	1			See Section 3.2.1.2.12.4
3.2.6.4	Thermal Vacuum	5	C,D		
3.2.6.5	Magnetic Fields	5	D		
3.2.6.6	Temperature	5	C,D		
3.2.7	Transportability	4	C,D		
3.2.8	Durability Factors	3	C,D		
3.2.9	Grounding, Bonding, Shielding	1			

Verification Method:
1 Similarity
2 Analysis
3 Inspection
4 Demonstration
5 Test
N/A Not Applicable
TBD (To Be Determined)

Verification Test Category Phase:
A Development
B Prototype
C Acceptance
D Protoflight
E Integrated Systems
F Prelaunch Checkout

Hardware Test Category
1 Comprehensive
2 Functional
3 Limited Functional
4 Post Delivery Checkout

Table IX. Verification Cross Reference Index

Section 3		Section 4			
Paragraph	Specification Requirement	Verification Method	Verification Test Category Phase	Hardware Test Category	Remarks
3.2.10	Redundancy	2,3	C,D		
3.2.11	Radiation	2,3	C,D		
3.2.11.1	Single Event Upset (SEU)	2			
3.2.12	Plasma Discharge	2			
3.2.13	Atomic Oxygen	2			
3.2.14	Meteoroid and Space Debris	2			
3.2.15	Finite Element Model (FEM) Requirements	N/A			
3.2.15.1	Finite Element Model Guidelines	3	D		
3.2.15.2	Deliverable NASTRAN Model Data	3	D		
3.2.15.3	Deliverable Model Validity Checks	2,3	D		
3.2.15.4	NASTRAN Model Verification	3	D		
3.2.15.4.1	Modal Survey Testing	2,3,5	D		
3.2.16	Thermal Math Models	2,3			

Verification Method:
1 Similarity
2 Analysis
3 Inspection
4 Demonstration
5 Test
N/A Not Applicable
TBD (To Be Determined)

Verification Test Category Phase:
A Development
B Prototype
C Acceptance
D Protoflight
E Integrated Systems
F Prelaunch Checkout

Hardware Test Category
1 Comprehensive
2 Functional
3 Limited Functional
4 Post Delivery Checkout

Table IX. Verification Cross Reference Index

Section 3		Section 4			
Paragraph	Specification Requirement	Verification Method	Verification Test Category Phase	Hardware Test Category	Remarks
3.2.16.1	Surface Model Requirements	2,3			
3.2.16.1.1	Required Deliverable Surface Model Documentation	3			
3.2.16.2	Reduced Node Thermal Model Requirements	2,3			
3.2.16.2.1	Required Deliverable Reduced Node Thermal Model Documentation	3			
3.2.16.3	Guidelines for the Detailed Assembly Thermal Model	N/A			
3.2.16.3.1	Required Deliverable Detailed Assembly Thermal Model Data	3			
3.2.17	GSE Requirements	N/A			
3.2.17.1	Electrical Ground Support Equipment (EGSE)	3,5	C,D	1	
3.2.17.2	Mechanical Ground Support Equipment (EGSE)	3,5	C,D	1	
3.3	Design and Construction	N/A			
3.3.1	Materials, Processes, and Parts	3	C,D		

Verification Method:
1 Similarity
2 Analysis
3 Inspection
4 Demonstration
5 Test
N/A Not Applicable
TBD (To Be Determined)

Verification Test Category Phase:
A Development
B Prototype
C Acceptance
D Protoflight
E Integrated Systems
F Prelaunch Checkout

Hardware Test Category
1 Comprehensive
2 Functional
3 Limited Functional
4 Post Delivery Checkout

Table IX. Verification Cross Reference Index

Section 3		Section 4			
Paragraph	Specification Requirement	Verification Method	Verification Test Category Phase	Hardware Test Category	Remarks
3.3.1.1	Approved Standard Parts, Materials, and Finishes	3	C,D		
3.3.1.2	Approval of Non–Standard Parts, Materials, and Finishes	3	C,D		
3.3.1.3	Parts, Materials, and Finishes List	3	C,D		
3.3.1.4	Properties of Materials	1	C,D		
3.3.1.5	Stress Corrosion	1	D		
3.3.1.6	Fracture Mechanics	2	C,D		
3.3.1.7	Dissimilar Metals	2	C,D		
3.3.1.8	Magnetic Metals	3	C,D		
3.3.1.9	Finish	2,3	C,D		
3.3.1.10	Lubricants and Sealants	3			
3.3.2	Electromagnetic Radiation	2,5	D		
3.3.3	Nameplates and Product Marking	3	C,D		
3.3.4	Workmanship	3	C,D		

Verification Method:
1 Similarity
2 Analysis
3 Inspection
4 Demonstration
5 Test
N/A Not Applicable
TBD (To Be Determined)

Verification Test Category Phase:
A Development
B Prototype
C Acceptance
D Protoflight
E Integrated Systems
F Prelaunch Checkout

Hardware Test Category
1 Comprehensive
2 Functional
3 Limited Functional
4 Post Delivery Checkout

Table IX. Verification Cross Reference Index

Section 3		Section 4			
Paragraph	Specification Requirement	Verification Method	Verification Test Category Phase	Hardware Test Category	Remarks
3.3.5	Interchangeability	3	C,D		
3.3.6	Safety	2,3	C,D		
3.3.6.1	Personnel	3			
3.3.7	Human Performance/Human Engineering	3,4	C,D		
3.4	Documentation	N/A			
3.5	Logistics	N/A			
3.5.1	Maintenance	N/A			
3.5.2	Supply	N/A			
3.6	Precedence	N/A			
4.1.3	Special Tests and Analysis	N/A			
4.1.3.1	Torsional Stiffness Test	5	C,D		
4.1.3.2	Release Mechanical Test (Pyro)	5	D		See Section 3.2.1.2.12.4

Verification Method:
1 Similarity
2 Analysis
3 Inspection
4 Demonstration
5 Test
N/A Not Applicable
TBD (To Be Determined)

Verification Test Category Phase:
A Development
B Prototype
C Acceptance
D Protoflight
E Integrated Systems
F Prelaunch Checkout

Hardware Test Category
1 Comprehensive
2 Functional
3 Limited Functional
4 Post Delivery Checkout

Critical Item Development Specification for EOS–AM Spacecraft Solar Array Assembly (SP–871)

PS20008514
CAGE No. 49671
07 May 1993

Critical Item Development Specification for EOS–AM Spacecraft Solar Array Assembly (SP–871)

Prepared under:
Contract NAS5–32500
NASA Goddard Space Flight Center
Greenbelt, Maryland 20771

Prepared by:
Martin Marietta Corporation
Astro Space
P.O. Box 800
Princeton, New Jersey 08543–0800

DCC051193

REVISION LOG

This log identifies those portions of this document which have been revised since the original issue. Revised portions of each page, for the current revision only, are identified by marginal striping.

Revision	Paragraph Number(s) Affected	Rev. Date	Approval
Initial Issue		05/07/93	CM/GSR

(This page intentionally left blank.)

TABLE OF CONTENTS

SECTION / PARAGRAPH	TITLE	PAGE
1	SCOPE	1
1.1	Identification	1
2	APPLICABLE DOCUMENTS	3
2.1	Military Documents	3
2.1.1	NASA Documents	3
2.2	Non–Government Documents	3
2.2.1	Martin Marietta Astro Space Documents	3
2.2.1.1	Other Documents	4
3	REQUIREMENTS	5
3.1	System Functions	5
3.1.1	Mechanical Functions	5
3.1.2	Electrical Function	5
3.2	Solar Array Assembly Design Requirement	5
3.2.1	Interface Definition	5
3.2.1.1	Mechanical Interface Requirement	5
3.2.1.2	Electrical Interface Definition	8
3.2.1.3	Thermal Interface Definition	8
3.2.2	Major Components	8
3.2.3	Orbit/Configuration Definition	9
3.3	General Characteristics	9
3.3.1	Performance Characteristics	9
3.3.1.1	Alignment	9
3.3.1.2	Mast Deployment Motor Torque Margin	11
3.3.1.3	Impact Torque	11
3.3.1.4	Latching	11
3.3.1.5	Mechanical Redundancy	11
3.3.1.6	Life	11
3.3.1.7	Electrical Requirements	12

TABLE OF CONTENTS (Continued)

SECTION / PARAGRAPH	TITLE	PAGE
3.3.1.8	Mechanical Requirements	19
3.3.2	Physical Characteristics	20
3.3.2.1	Mass Properties	20
3.3.2.2	Size	20
3.3.2.3	Damping	20
3.3.2.4	Strength	21
3.3.2.5	Stress Corrosion	22
3.3.3	Reliability	24
3.3.3.1	Reliability Assessment	24
3.3.3.2	Failure Modes and Effects Analysis (FMEA) and Critical Items List (CIL)	24
3.3.3.3	Worst–Case Analysis	24
3.3.3.4	Parts Stress Analysis	25
3.3.4	Maintainability	25
3.3.5	Environmental Conditions	25
3.3.5.1	Temperature Limits	25
3.3.5.2	Design Temperatures	26
3.3.5.3	Vacuum Bakeout	26
3.3.5.4	Atomic Oxygen	26
3.3.5.5	Transportability	26
3.3.5.6	Plasma Discharge	26
3.3.6	Radiation—Particulate and Electromagnetic	27
3.3.6.1	Particulate Radiation	27
3.3.6.2	Magnetic Moment	30
3.3.6.3	Electromagnetic Radiation	30
3.3.6.4	Meteoroid and Space Debris	31
3.3.6.5	Single Event Upset (SEU) and Single Event Latchup	31
3.3.7	Circuit Assembly	31
3.3.7.1	Cell Output Selection	31
3.3.7.2	Coverglass Installation	31
3.3.7.3	Cell Identification	31

TABLE OF CONTENTS (Continued)

SECTION / PARAGRAPH	TITLE	PAGE
3.3.8	Panel Assembly	31
3.3.8.1	Solar Cells	32
3.3.8.2	Solar Cell Coverglass	32
3.3.8.3	Adhesive	32
3.3.8.4	Cell and String Interconnects	32
3.3.8.5	Wiring and Connectors	32
3.3.9	Secondary Standard Solar Cells	33
3.3.10	Repair and Replacement of Cells	33
3.3.11	SAA Release Mechanisms	33
3.3.11.1	Pyrotechnic Devices	33
3.4	Design and Construction	34
3.4.1	Materials, Processes, and Parts	34
3.4.1.1	Approved Standard Parts, Materials and Finishes	34
3.4.1.2	Approval of Non–Standard Parts, Materials and Finishes	34
3.4.1.3	Parts, Materials and Finishes List	34
3.4.2	Properties of Materials	34
3.4.2.1	Magnetic Materials	34
3.4.2.2	Contamination Control	34
3.4.3	Nameplates and Product Marking	35
3.4.4	Interchangeability	35
3.4.5	Safety	35
4	QUALITY ASSURANCE PROVISIONS	37
4.1	General	37
4.1.1	Responsibility for Verification	37
4.1.2	Testing Locations	37
4.2	Verification Methods	37
4.2.1	Analysis/Similarity (1)	37
4.2.2	Inspection (2)	42
4.2.3	Demonstration (3)	42

TABLE OF CONTENTS (Continued)

SECTION / PARAGRAPH	TITLE	PAGE
4.2.4	Test (4)	42
4.3	Verification Phases	42
4.3.1	Qualification Verification (A)	42
4.3.1.1	Qualification Test Model (QTM) Verification (A1)	42
4.3.1.2	Protoflight Verification (A2)	42
4.3.2	Acceptance Verification (B)	43
4.3.3	Integrated Systems (C)	43
4.3.4	Prelaunch Checkout (D)	43
4.4	Verification Environment	43
4.4.1	Test Equipment Verification	43
4.4.2	Verification Conditions	43
4.5	Verification Documentation	43
4.6	Certification Requirements	43
4.7	Requirements/Verification Cross Reference Matrix	44
4.8	Specific Verification Tests	44
4.8.1	Pyro Shock	44
4.8.2	Electrical Tests	44
4.8.3	Thermal Cycling Tests	46
4.8.3.1	Thermal Cycle Qualification—Board Testing (Minimum requirements)	46
4.8.3.2	Thermal Cycle Acceptance Testing	47
4.8.4	Mechanical Tests	47
4.8.4.1	Mast Assembly	47
4.8.4.2	Elevation Hinge Assembly	47
4.8.4.3	Blanket Tensioning Mechanism	48
4.8.4.4	SAA Deployment	48
4.8.4.5	Vibroacoustic Tests	48
4.8.4.6	Strength Test	48
5	PREPARATION FOR DELIVERY	51
5.1	Packaging and Preservation	51
6	ABBREVIATIONS AND ACRONYMS	53

TABLE OF CONTENTS (Continued)

SECTION / PARAGRAPH	TITLE	PAGE
	APPENDIX I	
10	THERMAL MODELING	55
10.1	Thermal Math Models	55
10.2	Surface Model Requirements	56
10.2.1	Required Deliverable Surface Model Documentation	56
10.3	Reduced Node Thermal Model Requirements	57
10.3.1	Required Deliverable Reduced Node Thermal Model Documentation	58
10.4	Guidelines for the Detailed Assembly Thermal Model	60
10.4.1	Required Deliverable Detailed Assembly Thermal Model Data	61
	APPENDIX II	
20	FINITE ELEMENT MODEL (FEM) REQUIREMENTS	63
20.1	Deliverable Model Validity Checks	64
20.2	NASTRAN Model Verification	64
20.3	Deliverable NASTRAN Model Data	64
	APPENDIX III	
30	DEU INTERFACE	65
30.1	Relay Drivers	65
30.1.1	Relay Driver Interface Characteristics	65
30.1.2	Transient Suppression	65
30.2	Analog Telemetry Interfaces	65
30.2.1	Passive Analog Interfaces	65
30.2.2	Active Analog Interfaces	68
30.3	Active and Passive Bi–level Interfaces	68
30.3.1	Passive Bi–level Interfaces	68
30.3.2	Active Bi–level Interfaces	68

LIST OF FIGURES

FIGURE	TITLE	PAGE
1	SAA Telemetry	15
2	Relay Driver Standard Interface Circuit	66
3	Standard Passive Analog Interface Circuit	67
4	Standard Active Analog Interface Circuit	69
5	Standard Passive Bi–Level Telemetry Interface Circuit	70
6	Standard Active Bi–Level Telemetry Interface Circuit	71

LIST OF TABLES

TABLE	TITLE	PAGE
I	EOS Spacecraft Design Factors, 705 km Orbit, 1015 Nodal Crossing (Five Years)	6
II	EOS Spacecraft Design Factors, 705 km Orbit, 1045 Nodal Crossing (Five Years)	7
III	Loss Factors to be Used for Power Calculations	13
IV	Maximum Expected Flight Level Random Vibration for SAA	22
V	Qualification Level Sinusoidal Sweep Vibration Test Levels for SAA	23
VI	Plasma Density—Temperature	27
VII	Trapped Electron Spectrum	28
VIII	Trapped Proton Spectrum	29
IX	Solar Flare Proton Spectrum	30
X	Verification Cross Reference Matrix	38

TBD LOG

ITEM	SECTION	PAGE	SUBJECT	RESP.	DUE
TBD–1	3.3.1.1.3	10	Thermal Distortion Input Date	M.Clark	PDR
TBD–2	3.3.5.1	25	Thermal analysis uncertainty	Subcontractor	PDR
TBD–3	4.8.4.4	48	Deployment test at GE/ASD	G.Keeling	CDR

TBR LOG

ITEM	SECTION	PAGE	SUBJECT	RESP.	DUE
TBR–1	3.2.3,, 3.3.1.1.2 Table III	9 10 13	Array pointing error	Subcontractor	PDR
TBR–2	3.3.1.1.2 Table III	10 13	Blanket box alignment	Subcontractor	PDR
TBR–3	3.3.1.1.5	10	Drag density (during deployment)	G.Beck	PDR
TBR–4	3.3.1.1.5	11	Drag density (deployed)	G.Beck	PDR
TBR–5	3.3.1.2	11	DEU Power Consumption	Subcontractor	PDR
TBR–6	3.3.1.2.1	11	Deployment time	Subcontractor	PDR
TBR–7	Table III	13	Interconnect Resistance Loss	Subcontractor	PDR
TBR–8	Table III	13	Micrometeroid/Orbital Debris Loss	Subcontractor	PDR
TBR–9	3.3.2.1.1	20	SSU–SAD Harness Mass	R.Kimber	CDR
TBR–10	3.3.2.1.1	20	CSS Mass	R.Kimber	CDR
TBR–11	3.3.2.1.2	20	X Position of Stowed Center of Mass	J.Pellicciotti	PDR
TBR–12	3.3.2.1.2	20	Y Position of Stowed Center of Mass	J.Pellicciotti	PDR
TBR–13	3.3.2.1.2	20	Z Position of Stowed Center of Mass	J.Pellicciotti	PDR
TBR–14	3.3.2.1.2	20	Position of Deployed Center of Mass	J.Pellicciotti	PDR
TBR–15	3.3.5.1	25	Non–operating temperatures	Subcontractor	PDR
TBR–16	3.3.5.1	25	Maximum rate of temperature change	Subcontractor	PDR
TBR–17	3.3.6.3	30	SSU Driving Characteristics	R.Kimber	PDR
TBR–18	3.3.6.3	30	Radiated emissions	S.Majkowski	PDR
TBR–19	3.3.11.1	33	Maximum current of pyros	S.Holaday	CDR
TBR–20	3.3.11.1	33	Voltage supply for pyros	S.Holaday	CDR

TBS LOG

ITEM	SECTION	PAGE	SUBJECT	RESP.	DUE
TBS–1	4.8.1	44	Shock Response Spectra Table	C.Thasanatorn	CDR

1 SCOPE

1.1 Identification

This specification defines the requirements for the performance, design, operability, and test for the solar array assembly (SAA). The SAA shall consist of the hardware outboard of the solar array drive (SAD), Martin Marietta Astro Space (Astro Space) supplied, which is required to support the solar array in orbit and launch configurations, and the hardware required to deploy the array from the launch to the final orbit configuration. This specification also covers the solar array substrate, harness, connectors, and all other electrical and mechanical hardware necessary to meet the EOS mission requirements for the SAA, with the exception of the sequential shunt unit (SSU), coarse sun sensors (CSS) and SSU/SAD harness which are supplied and integrated by Astro Space.

(This page intentionally left blank.)

2 APPLICABLE DOCUMENTS

The exact issue in effect of the documents listed herein forms a part of this specification. Where differences occur between the specification and the documents listed herein, the requirements of this specification shall apply with the exception of WS20008514, Statement of Work for the SAA, which takes precedence over the specification.

2.1 Military Documents

MSFC–SPEC–522B	Design Criteria for Controlling Stress Corrosion
MIL–STD–975H	NASA Standard EEE Parts List
MIL–HDBK–217E, Notice 1	Reliability Prediction of Electronic Equipment
MIL–HDBK–17	Military Handbook, Plastics for Aerospace Vehicles
MIL–HDBK–23	Allowable Mechanical Properties of Structural Materials
MIL–STD–130B	Identification Marking of US Military Property
MIL–HDBK–5	Materials for Aerospace Structures
MIL–STD–1576	Electro–explosive Subsystem Safety Requirements and Test Methods for Space Systems

2.1.1 NASA Documents

CR #BB0000883B	Update of Meteoroid and Orbital Debris Environment Definition
GSFC–PPL–19	GSFC Preferred Parts List
NHB 5300.4	Workmanship Requirements

2.2 Non–Government Documents

2.2.1 Martin Marietta Astro Space Documents

WS20008514	Statement of Work for SAA
IS20008501	General Interface Specification for EOS Spacecraft (ICD–101)
20005869	EMI/EMC Control Plan (SEP–106)
PS20005404	EOS Verification Specification (VRD–110)

MICD20008514	Solar Array Mechanical Interface Control Drawing
EICD20008514	Solar Array Electrical Interface Control Drawing
TICD20008514	Solar Array Thermal Interface Control Drawing
20008650A	EOS Program Approved Materials and Processes List (PA–460)
20004280	EOS Subcontractor Performance Assurance Requirements
ICD20008604	Sequential Shunt Unit Interface Control Drawing (Mechanical, Thermal and Electrical)
20008648	EOS Program Approved Parts List
20008607	Ground Rules and Assumptions for Failure Modes and Effects Analysis (FMEA) (PA–500)
20008608	Ground Rules and Assumptions for Reliability Assessment (PA–515)
ICD20008669	Interface Control Drawing for EOS Spacecraft Coarse Sun Sensor (CSS)
MICD20008606	Mechanical Interface Control Drawing for EOS Spacecraft Solar Array Drive (SAD)
Source:	Martin Marietta Astro Space P. O. Box 800 Princeton, NJ 08543–0800

2.2.1.1 Other Documents

ASTM E595–84	Standard Test Method for Total Mass Loss and Collected Volatile Condensable Material from Outgassing in a Vacuum Environment (SL0004577)

3 REQUIREMENTS

3.1 System Functions

3.1.1 Mechanical Functions

The SAA shall perform the following functions for the Spacecraft:

a. Provide a means of supporting the solar array in a stowed configuration within the launch vehicle static envelope. This configuration must be capable of withstanding all handling, launch, and orbital operations.

b. Provide a retention and release mechanism which interfaces with the Spacecraft.

c. Provide a means of deploying the solar array from the stowed to the deployed orbital configuration.

d. Provide a means of remaining in the orbital configuration and maintaining the solar array planarity throughout the design life of the Spacecraft under all acquisition and station–keeping maneuvers.

e. Provide support for Astro Space supplied components.

3.1.2 Electrical Function

The SAA blanket shall convert incident solar energy to electrical energy at controlled voltage and power levels. The power generated during sunlight operation is to meet the requirements of Section 3.3.1.7. This power is to be transmitted to the Spacecraft bus via the SSU.

3.2 Solar Array Assembly Design Requirement

The Solar Array Assembly (excluding the DEU) shall be designed for a service life of 7.5 years for the orbit as defined in Section 3.2.3. The array shall be sized to provide as a minimum the power requirements listed in Tables I and II at five years, at an operating voltage of 127.0 Vdc (at the SSU input) at or below the maximum power point. See Section 3.3.1.7.

The array shall be a single flexible blanket which folds up into a blanket box. The blanket shall be deployed and supported during its lifetime by a continuous longeron mast. The aspect ratio of the blanket (length:width) shall not exceed 2.2 : 1 . Retraction of the array is not required but the mast motor shall be reversible in order to aid deployment of the array if necessary.

3.2.1 Interface Definition

3.2.1.1 Mechanical Interface Requirement

a. The Solar Array MICD20008514 shall be provided by Astro Space to define all mechanical interfaces to the Spacecraft structure. This MICD provides interfaces to the Spacecraft for the blanket box assembly, elevation hinge assembly and for any additional canister support that may be needed. Interface Control Drawings (ICDs) are also provided for Astro Space supplied equipment to be accommodated by the SAA such as the SSU ICD (ICD20008604), the CSS ICD (ICD20008669) and the SAD ICD (MICD20008606).

Table I. EOS Spacecraft Design Factors, 705 km Orbit, 1015 Nodal Crossing (Five Years)

Day of Year	Solar Constant Relative to 1 AU*	Beta Angle (Deg.)	Equiv. Sun Intensity Factor**	Power Required at 127.0 V (SSU Input kW)
0	1.0342	27.9	0.9141	4.94
30	1.0307	30.6	0.8877	4.90
45	1.0256	30.8	0.8812	4.89
60	1.0189	30.1	0.8818	4.91
90	1.0024	26.4	0.8977	4.96
120	0.9858	22.2	0.9126	5.02
150	0.9733	20.2	0.9137	5.04
155	0.9718	20.1	0.9126	5.04
180	0.9676	20.9	0.9039	5.03
210	0.9699	23.0	0.8927	5.01
225	0.9740	23.9	0.8906	5.00
240	0.9797	24.3	0.8927	4.99
270	0.9950	24.0	0.9088	5.00
300	1.0121	23.4	0.9290	5.01
330	1.0264	24.3	0.9353	4.99
360	1.0338	27.3	0.9188	4.95

* Solar Constant = $1/r^2$, where r = True Heliocentric Distance

** Equivalent Sun Intensity Factor = $1/r^2 \cos B$ (no Array Rotational Offset)

Table II. EOS Spacecraft Design Factors, 705 km Orbit, 1045 Nodal Crossing (Five Years)

Day of Year	Solar Constant Relative to 1 AU*	Beta Angle (Deg.)	Equiv. Sun Intensity Factor**	Power Required at 127.0 V (SSU Input kW)
0	1.0342	21.0	0.9655	5.03
30	1.0307	23.4	0.9459	5.01
60	1.0189	22.7	0.9401	5.01
90	1.0024	19.1	0.9474	5.05
120	0.9858	15.2	0.9514	5.09
150	0.9733	13.5	0.9465	5.10
160	0.9706	13.5	0.9437	5.10
180	0.9676	14.3	0.9375	5.09
210	0.9699	16.2	0.9313	5.08
240	0.9797	17.1	0.9363	5.07
270	0.9950	16.6	0.9535	5.08
300	1.0121	16.1	0.9725	5.08
330	1.0264	17.3	0.9799	5.07
360	1.0338	20.4	0.9690	5.04

* Solar Constant = $1/r^2$, where r = True Heliocentric Distance

** Equivalent Sun Intensity Factor = $1/r^2 \cos B$ (no Array Rotational Offset)

b. The SAA shall provide the capability to be integrated to the EOS Spacecraft in the horizontal mode.

c. The SAA shall provide the capability to be released and deployed during Spacecraft level testing to verify the operation of the release/restrain system and deployment commands/operation/telemetry.

3.2.1.2 Electrical Interface Definition

The electrical interface to the SAA is to the Sequential Shunt Unit (SSU) mounted on the mast canister. These interfaces shall be defined in the SAA Electrical Interface Control Drawing (EICD20008514) and the SSU Interface Control Drawing (20008604).

3.2.1.3 Thermal Interface Definition

The SAA thermal design shall meet the interface requirements defined in IS20008501, Sections 5.3 and 5.4 and shall be defined in TICD20008514 and 20008604.

3.2.2 Major Components

The SAA shall consist of the following major components:

a. Blanket Box (Section 3.3.1.7.11 and 3.3.1.8.1)

b. Solar Panel Assemblies (SPA) forming the Blanket using Gallium Arsenide on Germanium solar cells (Section 3.3.1.7.10)

c. Extendable Mast and Canister Assembly (Section 3.3.1.8.2).

d. Elevation Hinge Assembly.(Section 3.3.1.8.3).

e. Release Mechanisms between stowed SAA and Spacecraft secondary structure (Section 3.3.12).

f. Pyrotechnic Actuated Devices (Section 3.3.12.1) (Astro Space furnished and integrated)

g. Sequential Shunt Unit (Astro Space furnished and integrated) (Section 3.3.1.7.8)

h. Deployment actuator Electronics Unit (DEU) and Drive Motors (Section 3.3.1.7.9)

i. Coarse Sun Sensors (CSS) (Astro Space furnished and integrated) (Section 3.3.1.7.3)

j. SSU/SAD harness (Astro Space furnished and integrated)

k. All other components required to create a solar array assembly which has the characteristics listed in this specification.

3.2.3 Orbit/Configuration Definition

The SAA shall provide the required power for a sun–synchronous orbit of 705 km with a descending nodal crossing range of 1015 to 1045 am and a 98.2–degree inclination, at the design temperatures defined in Section 3.3.5.1. This orbit configuration has a nominal sun inclination angle of 22.5 degrees and a sun incidence angle (Beta) ranging from 13.5 degrees to 30.8 degrees, depending on the nodal crossing (see Tables I and II). The Beta angle does not include a ±3.5 degrees **(TBR–1)** array pointing error due to the distortion of the mast and blanket. Sunlight duration is 66.2–64.1 minutes and the eclipse duration is 32.7–34.8 minutes. (The nominal orbit period is 98.9 minutes.)

3.3 General Characteristics

a. The SAA deployed and stowed envelope shall stay within the limits defined in MICD20008514 (Solar Array Mechanical Interface Control Drawing)

b. All composite structures and bonds shall be proof tested to 1.25 times the flight limit loads.

c. The Solar Array shall supply power to the SAA–SSU interface at a voltage of 127.0 Vdc at the design temperatures defined in Section 3.3.5.1.

d. Telemetry for the purpose of monitoring the SAA status shall be provided (Section 3.3.1.7.3).

e. Protection of the SAA from the effects of atomic oxygen shall be provided. (Section 3.3.5.4)

f. Adequate protection for the Gallium Arsenide on Germanium solar cells from charged particle degradation and ultra–violet radiation encountered during the operational lifetime shall be provided by the use of coverglasses.

g. Environmental protection from the effects of glow discharge, and erosion arising from the plasma shall be provided. (See Section 3.3.5.6)

h. Thermal control of the SAA shall be achieved by passive techniques involving the use of multi–layer blankets and thermal finishes (excluding DEU which shall in addition use survival heaters, if required)

3.3.1 Performance Characteristics

The SAA will have the performance characteristics outlined in this section.

3.3.1.1 Alignment

3.3.1.1.1 Alignment Reference

The deployed solar array alignment reference shall be relative to the SAD rotational axis. The SAA shall allow for shimming at the SAD interface. An alignment cube shall be provided which will allow the measurement of the array blanket box position to the SAD interface. The alignment cube shall be visible when the SAA is in the stowed position. The subcontractor shall provide the measured data to Astro Space with delivery of the SAA.

3.3.1.1.2 Alignment Budget

The subcontractor shall take into account all off–pointing of the array from the sun in sizing the area of the blanket.

The blanket box shall be aligned to the center line of the SAD interface within 0.5 degrees **(TBR–2)**. In addition, misalignment of the SAA pointing of 5.5 degrees due to SAD error shall be allowed for. The total torsional off–pointing of the SAA shall therefore be 6.0 degrees. This shall be in the torsional mode and will therefore not add to the Beta angle.

The deployed array mast + blanket off–pointing due to bowing shall not exceed 3.5 degrees **(TBR–1)** This shall be in the planar mode and will therefore add to the Beta angle.

3.3.1.1.3 Thermal Distortion

When fully extended the change in alignment of the SAA shall not exceed the capabilities of the substrate tensioning mechanism.

A detailed thermal analysis shall be performed to verify that mast and blanket distortions due to solar heating and cooling are within the acceptable values. The analysis shall consider worst–case mast deflections and distortions caused by shadowing due to normal operations. The inputs for this analysis shall be supplied by Astro Space (Date **(TBD–1)**).

Design, analysis, and test shall consider the effects of both static and cyclic thermal stresses on the SAA under stowed, deployment, and deployed conditions. The design and analysis shall include the worst–case thermal conditions as predicted by the TMM (Appendix I).

3.3.1.1.4 Solar Snap Disturbance

Thermal distortion transfer rates (solar snap) at the time the SAA passes the penumbra between the sunlight and eclipse portions of the orbit shall not generate a disturbance force impulse (directed along any axis) greater than 8 x 10–4 pound–seconds referred to the blanket center of mass. Solar snap shall not generate a disturbance torque impulse greater than 0.04 inch–pound–second about the SAA rotation axis.

The subcontractor shall define the magnitude and direction of the solar snap disturbance force impulse, assuming that the SAA is oriented to the sun in accordance with paragraphs 3.2.3 and 3.3.1.1.2 at the time of passage through the penumbra. The subcontractor shall verify their estimate of the solar snap disturbance force impulse by a combination of analysis and coupon test. The test procedure shall be approved by Astro Space.

3.3.1.1.5 Aerodynamic Drag

The SAA during deployment shall withstand the aerodynamic drag forces associated with a density of up to 0.14×10^{-10} **(TBR–3)** kilograms per cubic meter with the blanket at an angle of attack up to 10 degrees with respect to the air stream.

The fully deployed SAA during transfer orbit (perigee passage) shall withstand the aerodynamic forces associated with a density of up to 1.0×10^{-10} **(TBR–4)** kilograms per cubic meter with the blanket at an angle of attack of up to 90 degrees with respect to the air stream.

3.3.1.2 Mast Deployment Motor Torque Margin

The motor shall provide the necessary torque to extend the mast and the SAA and all necessary harness in all environments with the electrical power drawn by the motor and the DEU not to exceed 70 watts average under normal operating conditions **(TBR–5)**. The minimum torque available shall be three times the required torque to overcome all dynamic and frictional forces.

3.3.1.2.1 Deployment Time

The maximum time for full second–stage deployment of the SAA shall not exceed 15 minutes **(TBR–6)** based on the worst–case thermal conditions as predicted by the TMM (Appendix I). For the elevation time for the hinge assembly see Section 4.8.4.2.

3.3.1.3 Impact Torque

The impact torque/moment applied at the SAD interface shall not exceed 335 in–lb.

End of travel deployment rate for the EHA shall not exceed 1 degree per second.

3.3.1.4 Latching

All latching devices on the SAA shall have positive torque margins of at least three times that of frictional torques imposed during the latching operation. Latches shall have a preload sufficient to prevent any deadband and maintain the required stiffness of the array during all attitude control maneuvers.

3.3.1.5 Mechanical Redundancy

Moving mechanical functions shall be accomplished redundantly whenever practical. All deployment limit switches shall be redundant.

3.3.1.6 Life

3.3.1.6.1 Operating Life

The SAA (excluding the DEU) shall meet the requirements of the specification after five years of in–orbit operation. In addition the SAA shall be required to be able to produce power for the Spacecraft after 7.5 years of in–orbit operation. All consumables that are part of the solar array shall be provided in quantities that are consistent with the life requirement specified. The DEU, and all associated motors and sensors, are required to survive one month of in–orbit operation.

3.3.1.6.2 Storage Conditions

The SAA shall meet all the requirements of this specification after ground storage at +23°C (+10°C) and a maximum relative humidity of 50% for a period of 7.5 years.

3.3.1.7 Electrical Requirements

3.3.1.7.1 SAA Sizing

The SAA shall be sized to meet the worst–case degradation factors listed in Table III and will meet the power requirements given in Tables I and II as a minimum at five years, at the design temperatures defined in Section 3.3.5.1. (The operating voltage at the SSU input is to be 127.0 Vdc).

3.3.1.7.2 Power Analysis

a. On–Station Power Calculations

A power analysis shall be supplied showing the BOL and five year power calculations at different orbital configurations (e.g., 1015 nodal crossing and 1045 nodal crossing) and for the worst–case and best–case seasonal variations as defined in Tables I and II. The input for this analysis will be:

1. BOL average performing cell data based on the measured characteristics of the actual cell type to be used (Measurement of these characteristics shall have been performed under accepted NASA conditions and will be performed on qualified production or Type Approval Test cells.)

2. The worst–case and nominal temperatures for BOL and five years (demonstrated by analysis). See Section 3.3.5.1

3. Loss factors as defined in Table III for five years to include degradation due to the radiation fluence calculated from the environment as defined in Section 3.3.6.1. and random failures as calculated from the reliability requirement as defined in Section 3.3.3.

The output shall be in the form of cell, SPA and SAA level I–V curves for all cases as described above, clearly showing the maximum power and the usable power at the interface voltage with the SSU. (In order for this to be performed, a voltage drop analysis shall be produced showing the expected ohmic losses between the end of the cell strings and the SSU for various mission phases). A separate output shall also be performed to determine the maximum short circuit current of a circuit under greatest sun intensity and highest temperature at BOL using the BOL Loss Factors in Table III.

b. Power Calculations for Ground Flasher Testing (Absolute Power Performance Test)

A power calculation shall be performed for the output expected on the ground at AM0 illumination (as defined in Section 4.8.2) and 28°C from an SAA that satisfies the requirements of 3.3.1.7.1. This value, once accepted by Astro Space, will be the acceptance criteria against which the buy–off takes place. (For test details see Section 4.8.2.)

Table III. Loss Factors to be Used for Power Calculations

Loss Factor	Acceptance Test	Bol Best Case	5 Yrs
Cell Mismatch	0.98	1.0	0.98
Interconnect Resistance	0.98	0.98	0.98 **(TBR–7)**
Calibration Error	0.98	1.02	0.98
UV Loss	1.0	1.0	0.975
Cover darkening	1.0	1.0	0.995
Micrometeoroids/Orbital Debris	1.0	1.0	0.98 **(TBR–8)**
Array Off–Pointing (Torsional)	–	–	6.0° **(TBR–2)**
Array Off–Pointing (Planar)	–	–	3.5° **(TBR–1)**
Plasma	1.0	1.0	0.99
Radiation	–	–	A
Random Failures	–	–	B

a. Radiation Degradation due to the fluence as calculated from the environment specified in Section 3.3.6.1.

b. Margin for random failures is to meet the reliability requirement of Section 3.3.3.

Note: Planar angle losses add to Beta Angle

3.3.1.7.3 Telemetry

The SAA shall have two short circuit sensors one mounted on the outer panel and one on the inner panel. Each sensor shall have a load resistor across it (subcontractor responsibility) which yields a potential difference of <350 mV when the sensor is at 1 AM0 illumination, at the highest operational temperature. The SAA shall have two open circuit voltage sensors one mounted on the outer panel and one on the inner panel. All solar cell sensors shall be of the same specification used for power generation on the SAA and shall be supplied and mounted by the subcontractor on the blanket of the SAA. Four temperature sensors (supplied by subcontractor) shall also be mounted at or near each sensor cell by the subcontractor to measure the temperatures. These shall be 5 kohm thermistors rated for 1 mA. The wiring between the sensors and SSU interface shall be the responsibility of the subcontractor.

The SAA shall provide the mounting area and the mounting support for four coarse sun sensors (CSSs), to be supplied by Astro Space. These shall be mounted by Astro Space on the ends of the blanket box base. Each CSS and mounting must be within the allowable area as defined in MICD20008514. The interface shall be defined by ICD20008669.

The wiring from the CSS to the SSU shall be the responsibility of the subcontractor. Redundant shielded twisted–pair wiring shall be used.

The Elevation Hinge Assembly shall include redundant telemetry that will indicate position during deployment (with a tolerance of ±10% or less, after initial calibration) and when latching of the SAA during the first stage of deployment has occurred. The wiring from the elevation hinge assembly to the SSU shall be the responsibility of the subcontractor.

The Blanket Box shall include redundant telemetry to indicate when Box separation has occurred.

The Deployment actuator Electronics Unit (DEU) shall provide redundant telemetry to indicate the rate of deployment of the mast from the canister with a tolerance of ±2% or less (after initial calibration). The DEU shall also provide redundant telemetry to indicate when the blanket final deployment tension has been reached; the signal shall be used by the DEU and shall halt the deployment motor. The mast deployment motor(s) shall contain two temperature sensors to be fed into the DEU. The sensors shall generate temperature telemetry with a tolerance of ±2% or less (after initial calibration). The DEU shall also provide redundant telemetry to indicate motor direction and the motor selected (i.e. mast deployment motor or blanket–box separation motor). The DEU shall also provide redundant telemetry to indicate the operating status (enable or disable). The wiring from the telemetry to the SSU via the DEU shall be the responsibility of the subcontractor.

Figure 1 shows the quantity and position of the SAA telemetry.

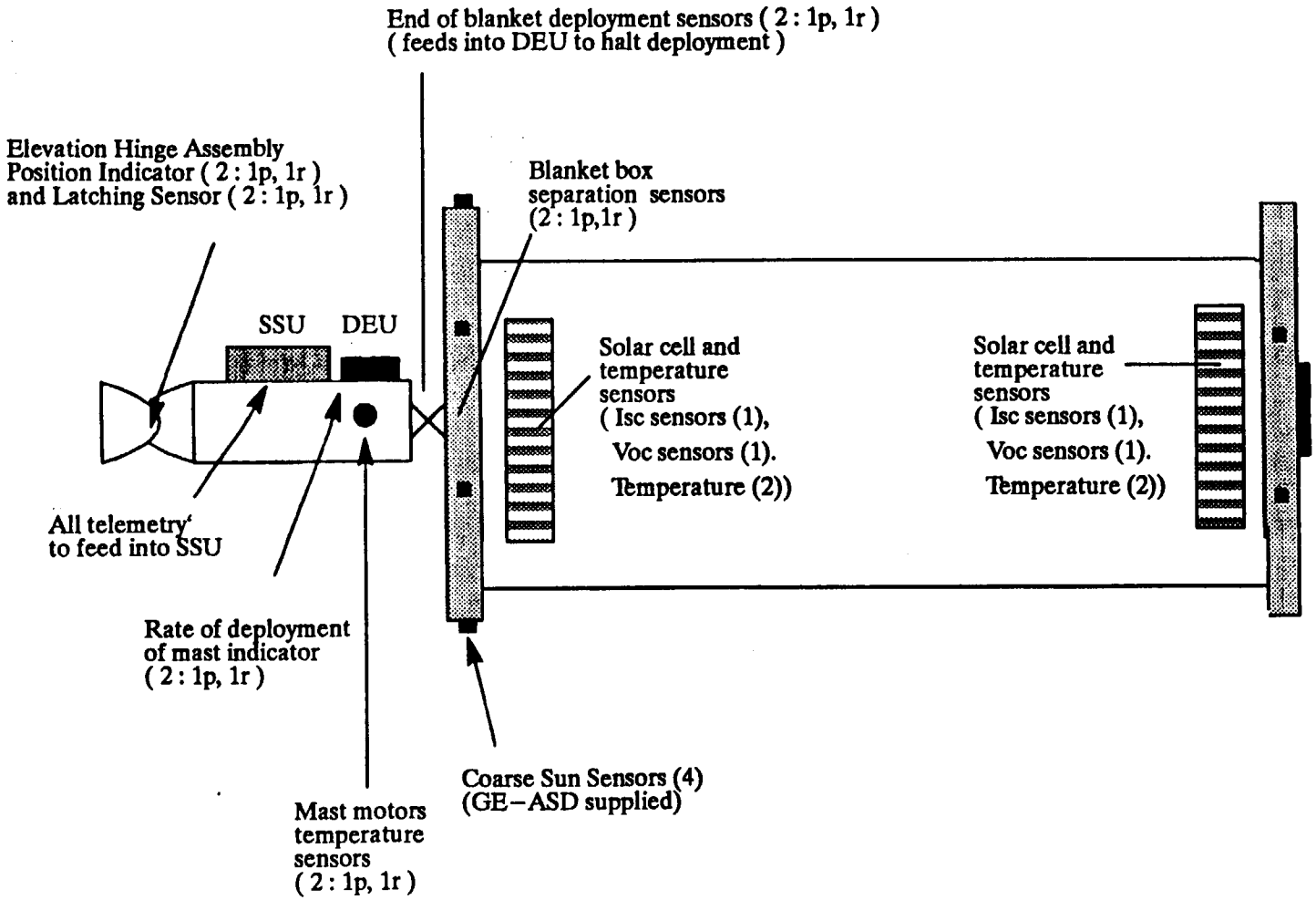

Figure 1. SAA Telemetry .

PS20008514
07 May 1993

3.3.1.7.4 Capacitance

The capacitance of each circuit at the SSU interface shall be between 75 nF and 150 nF when the circuit is switched at 200 kHz. This shall be verified by analysis and test. The subcontractor shall supply a mathematical model of the circuit.

3.3.1.7.5 Inductance

The inductance of each circuit at the SSU interface shall be between 20 mH and 40 mH when the circuit is switched at 200 kHz. This shall be verified by analysis and test. The subcontractor shall supply a mathematical model of the circuit.

3.3.1.7.6 Impedance

The impedance of each circuit shall be calculated by analysis and verified by test. The subcontractor shall supply a mathematical model of the circuit.

3.3.1.7.7 Reverse biasing

The SAA electrical and thermal performance shall not be degraded by reverse biasing of solar cells caused by shadowing or partial fracture. This requires each cell either to be individually reverse bias tolerant or bypass diodes to be used across one or more cells (to be verified by analysis) in order to limit the reverse biasing. The subcontractor shall perform a worst–case reverse bias analysis using actual cell test data as an input to justify the design decision.

A reverse current screening test (RCST) shall be performed on all cells if the circuit design does not use bypass diodes. The RCST test plan and procedure shall be included in the cell specification and shall be approved by Astro Space.

3.3.1.7.8 Sequential Shunt Unit (SSU)

The SSU (responsibility of Astro Space) shall be supported by the SAA. The subcontractor is responsible for the mounting support structure for the SSU. The definition of the mechanical interface shall be the responsibility of Astro Space as defined by the SSU Interface Control Drawing (ICD20008604).

The dimensions of the box will be documented in the SSU ICD20008604.

The mass of the box will be 97 lbs (88 lbs + 10% contingency). The SSU will dissipate a maximum of 40 Watts of heat into the SSU mounting interface. The SSU mounting interface shall not exceed 50°C under any conditions. The SSU shall be mounted by the subcontractor so that the SSU radiator plate is facing away from the sun and perpendicular to the deployed blanket normal. The thermal control for the SSU will be provided by Astro Space. The thermal interface between the SSU and the SAA shall be controlled in the SSU ICD20008604.

The SSU shall be mounted by Astro Space after SAA delivery. A mass model of the SSU and SAD/SSU harness shall be provided by Astro Space to the subcontractor for testing purposes.

3.3.1.7.9 Deployment Actuator Electronics Unit (DEU)

The DEU shall perform the control and monitoring of the deployment of the array. The DEU shall interface electrically with the SSU defined by SSU Electrical Interface Control Drawing (20008604) and Appendix III. The maximum consumption of the DEU (before and after deployment) shall be 10 W at a supply voltage of 120 V. The DEU shall receive the deployment commands and a redundant protected 120 V power supply from the SSU. All other voltages required for SAA telemetry and/or deployment motor shall be converted by the DEU from the 120 V supply (subcontractor responsibility). The deployment telemetry from the DEU shall go directly into the SSU. The electrical harnessing between the DEU and SSU shall be subcontractor responsibility.

The DEU shall inhibit the mast deployment motor until the blanket–box separation has been completed. This interlock shall be able to be overridden in the event of failure that would otherwise prevent the mast deployment motor from operating. The DEU shall also accept and execute the command to override the end–of–deployment signal in the case of failure that may prevent full extension of the blanket.

Redundant circuitry shall be used in order to meet the reliability requirement of 3.3.3. The DEU shall be designed so that the redundant circuits cannot be in the enable state simultaneously.

The design, manufacture, testing, and integration of the DEU shall be the responsibility of the subcontractor.

Thermal control shall be accomplished by a passive thermal finish or blanket, and the use of survival heaters (if required) to maintain minimum temperatures.

The SAA shall preferably be of a design that enables the DEU not to be required after deployment of the blanket.

The command and telemetry list for the DEU shall include:

Commands

Name	Type	Qty
DEU enable	Refer to Figure 2	2
DEU disable	Refer to Figure 2	2
Select blanket box motor	Refer to Figure 2	2
Select mast motor	Refer to Figure 2	2
Motor Forward	Refer to Figure 2	2
Motor Reverse	Refer to Figure 2	2
Motor Start	Refer to Figure 2	2
Motor Stop	Refer to Figure 2	2
End of deployment limit switch override (enable)	Refer to Figure 2	2
End of deployment limit switch override (disable)	Refer to Figure 2	2
Mast motor inhibit override (enable)	Refer to Figure 2	2
Mast motor inhibit override (disable)	Refer to Figure 2	2

Telemetry

Name	Range	Type	Qty
Mast Motor Temperature	0–1mA	Refer to Fig 3	2
Mast Rate of Deployment	0–5 V	Refer to Fig 4	2
Blanket Box Separation Sensor status	0–5 V	Refer to Fig 6	2
End of Deployment Sensor status	0–5 V	Refer to Fig 6	2
Elevation Hinge Position	0–5 V	Refer to Fig 4	2
Elevation Hinge Latch status	0–5V@ 0–10mA	Refer to Fig 5	2
DEU convertor output	0–5 V	Refer to Fig 4	2
Motor direction status	0–5 V	Refer to Fig 6	2
Select blanket–box separation motor status	0–5V@ 0–10mA	Refer to Fig 5	2
Select mast deployment motor status	0–5V@ 0–10mA	Refer to Fig 5	2
End of deployment limit switch override status	0–5V@ 0–10mA	Refer to Fig 5	2
Mast motor inhibit override status	0–5V@ 0–10mA	Refer to Fig 5	2

3.3.1.7.10 SAA Blanket

The blanket shall consist of modular Solar Panel Assemblies (SPA). A minimum of 24 panels shall be fully populated with active solar cell circuits in order to meet as a minimum the power requirement in Tables I and II. The substrate for the SPA shall be flexible and composed of one or more kapton layers to which electrical laydown on one side shall occur using an adhesive that meets the requirements of 3.4.1. Reinforcement and protection of the kapton shall be introduced where necessary in order for the blanket to meet a 7.5 year lifetime for the specified environment. The design of the SPA shall be proven by thermal cycling of a Q–board as specified in 4.8.3.1.

The blanket design shall be such that the operating temperature of the solar cells is minimized. This shall be accomplished by use of thermal coatings on the rear of the blanket where necessary.

The blanket design will be such that dark I–V testing is possible while the blanket is under pre–load compressive force in the blanket box.

The mechanism for tensioning the blanket shall be preferably a passive device i.e., not requiring power from the Spacecraft or requiring the activation of the Mast Deployment Motor.

The blanket design must incorporate the magnetic moment requirement of 3.3.6.2.

The Flat Copper Cabling (FCC) harness along the sides of the blanket shall be designed for possible power growth of up to 28 circuits.

3.3.1.7.11 Blanket Box

When the SAA is ready for deployment in–orbit the blanket box shall be separated by releasing the mechanism that holds the top and base of the box together. The release shall be accomplished by an electrically redundant motor. Redundant telemetry shall be provided to show when separation has successfully occurred.

The Junction boxes mounted on the blanket box shall be designed to take up to 28 circuits. Harnessing between the Junction boxes and SSU shall also be designed for up to 28 circuits as shown in ICD20008604.

3.3.1.8 Mechanical Requirements

3.3.1.8.1 Blanket Box

The blanket box shall be composed of a top and base, the functions being twofold:

a. To hold the blanket under a pre–load compressive force in the stowed configuration in order for the SAA to survive the launch environment. The pre–load compressive force in the stowed configuration shall be accomplished by the use of a pre–load mechanism between top and base of the box. The force shall be measurable at periods during storage.

b. To act as attachments at either end of the blanket in the deployed configuration. The force applied by the tension mechanism between the top and base shall provide sufficient blanket tension to maintain the minimum deployed blanket natural frequency. (Sections 3.3.1.7.11 and 3.3.2.3.1.)

3.3.1.8.2 Mast, deployment motor and canister assembly

The mast shall be continuous longeron members which shall be driven by redundant motors to provide the necessary torque to extend the mast and the SAA. (Section 3.3.1.2). The mast deployment motor shall be powered and controlled by the DEU (Section 3.3.1.7.10) and shall include the ability to be reversed by the DEU in order to aid deployment of the array if necessary. The mast diameter and length shall be sized for the growth capability of the blanket of up to 30 panels.

3.3.1.8.3 Elevation Hinge Assembly

The elevation hinge shall connect the base of the canister to the SAD and shall provide the articulation for the initial phase of deployment. After the holdowns between blanket box and structure have been released by the firing of pyrotechnic initiators, the hinge shall rotate the SAA until latching occurs. Telemetry shall be provided on the hinge assembly (subcontractor responsibility) for an end–of–deployment signal and position during deployment. This telemetry shall interface electrically with the SSU (Astro Space SSU ICD 20008604). Provisions shall be made between the SAD and SSU for routing and tie–down of the SSU–SAD harness including any intermediate connectors. The harness shall be the responsibility of Astro Space as defined in EICD20008514. The SSU–SAD harness shall be mounted by Astro Space after SAA delivery. A mass/stiffness model of the harness shall be provided by Astro Space for the subcontractor for testing purpose.

Minimum torque available shall be three times the required torque to overcome all frictional forces to achieve deployment and latch–up.

The elevation hinge assembly shall be designed for a blanket of up to 30 panels.

3.3.2 Physical Characteristics

3.3.2.1 Mass Properties

3.3.2.1.1 Mass

The maximum mass of the SAA shall not exceed 353 lbs. This mass allocation does not include the SSU, 97 lbs; SSU to SAD harness, 5 lbs **(TBR–9)** ; or CSS units, 5lbs total (for 4 units) **(TBR–10)**; but includes all SAA hardware up to and including the interface with the SAD.

3.3.2.1.2 Center of Mass

a. The center of mass of the stowed SAA (including SSU, CSS, and Hinge harness) shall be:

$$X = 0 \pm 1.0 \text{ inches } \textbf{(TBR–11)}$$
$$Y = -18.5 \pm 1.5 \text{ inches } \textbf{(TBR–12)}$$
$$Z = +45.0 \pm 1.5 \text{ inches } \textbf{(TBR–13)}$$

referenced from the SAD interface and using the Spacecraft coordinate system.

b. The center of mass of the deployed array (including SSU, CSS, and Hinge harness) shall not exceed 217 inches **(TBR–14)** in the –Y direction referenced from the SAD interface.

3.3.2.1.3 Center of Pressure

The center of pressure shall be defined as the radial distance from the centroid of the projected area of the array assembly in the plane of the deployed blanket to the EOS Spacecraft origin (x axis). The maximum center of pressure distance shall not exceed 303 inches.

3.3.2.2 Size

The SAA including the SSU and CSS (both Astro Space supplied) shall fit within the stowed and deployed envelopes defined in MICD20008514 (Solar Array Mechanical Interface Control Drawing).

3.3.2.3 Damping

The damping coefficient used in the design for all of the stowed solar array flexible modes shall not exceed 0.15%.

3.3.2.3.1 Stiffness

The stowed array shall have a minimum stowed frequency of 35 Hz. The frequency shall be calculated at the primary structure and SAD interface, as defined in MICD20008514, using the identical boundary conditions assumed for flight.

The deployed array shall have a first torsional blanket mode in excess of 0.16Hz. The deployed array shall have a fixed base bending blanket mode calculated from the SAD interface in excess of 0.19 Hz.

3.3.2.3.2 Inertias

The vendor shall provide moments of inertia and center of mass of the deployed/stowed SAA relative to Spacecraft coordinate reference frame with respect to the SAD Interface.

3.3.2.4 Strength

3.3.2.4.1 Finite Element Model (FEM) Requirements

Refer to Appendix II.

3.3.2.4.2 Design Loads

Refer to IS20008501 Section 4.9.1, 6.3, 6.4.

3.3.2.4.2.1 Launch Loads

The launch CG load factors (preliminary transient loads) are:

X s/c=±6.6g, Y s/c=±6.6g, Z s/c=±7.6g

The three load components act simultaneously. Note that the response acceleration at the solar array extreme points may be higher than those at SAA CG point. Acceleration at the array extreme points shall be verified by coupled loads analysis.

During launch, the SAA is subjected to mechanically transmitted (structure–borne) random vibrations through the Spacecraft primary structure as well as the direct airborne acoustic impingement on the SAA structure. All components of the SAA shall be designed to the environments as specified in this document. Structure–borne random vibration levels are specified at the Spacecraft truss node interfaces and are defined in Table IV. Random vibration levels for components mounted on the SAA structure are a function of mounting structure dynamic characteristics. The random vibration levels for those components shall be established based on an envelope of the structure–borne random vibrations and vibro–acoustic responses of the mounting structure due to direct air–borne acoustic excitations (ref. Section 6.3 of IS20008501). A method (with approval of Astro Space) shall be used to develop the random vibration levels. Random vibration analysis is required but random vibration testing is not required.

The loads generated during launch at the elevation hinge to SAD interface shall not exceed the values shown in the SAD MICD20008606.

Three axis sine vibration testing of the SAA will be required in order to verify the sinusoidal component of the launch environment. In addition to the above quasi–static design loads, the SAA must be capable of withstanding the sine vibration environment as specified in Table V

Table IV. Maximum Expected Flight Level Random Vibration for SAA

Frequency Range (Hz) (All three axes)	Power Spectral Density (G^2/Hz)
20	0.012
20 – 50	+3 dB/Octave
50 – 800	0.03
800 – 2000	–3 dB/Octave
2000	0.012
Overall	6.72 G_{RMS}

Notes:

1. Protoflight test duration is one minute

2. Random vibrations are specified at the truss node interface for each of three axes.

3.3.2.4.2.2 Deployed Loads

The maximum on–orbit loading shall be 0.015 g at the cg and applied in the Spacecraft thrust axis (X axis). The SAA shall withstand this load when rotated to any angle about its rotation axis.

3.3.2.5 Stress Corrosion

A stress corrosion cracking analysis shall be performed, if applicable, on each component per MSFC–SPEC–522B, Design Criteria for Controlling Stress Corrosion.

Table V. Qualification Level Sinusoidal Sweep Vibration Test Levels for SAA

Spacecraft X (Thrust) Axis

Frequency (Hz)	**Protoflight Levels** (g)
5 – 7	0.5 inches Double Amplitude
7 – 50	1.2

Spacecraft Y and Z (Lateral) Axis

Frequency (Hz)	**Protoflight Levels** (g)
5 – 9	0.5 inches Double Amplitude
9 – 50	2.0

Notes:

1. Qualification levels depict 1.25 times maximum expected flight levels and apply to Protoflight hardware.
2. Test axes are in spacecraft coordinate axes.
3. It is acceptable to use one–Hertz–wide acceleration ramps for changing test "g" levels at test acceleration profile steps, provided the plateau frequency bandwidths depicted above are maintained.
4. Sweep rate for Protoflight hardware is 4 Octaves/Minute.
5. Equipment mounting to the vibration test fixture shall be similar to the installation to the flight spacecraft, including any interface thermal washers, kinematic mounts or other mounting hardware. All mounting fasteners, preloads and locking features shall be similar to the flight installation. Test input levels shall be applied at the Spacecraft side of the kinematic mounts (i.e., the interface between the kinematic mounts and spacecraft primary structure).
6. If required, the vibration test levels shall be notched so as not to exceed 1.25 times the final design loads cycle results, as determined by low–level sweep prior to the protoflight level test in each axis.

3.3.3 Reliability

The SAA mechanical reliability shall have a Probability of Success (Ps) of 0.999930 after five years in orbit. The SAA electrical reliability shall have a Ps of 0.999999 after five years in orbit. This calculation shall include all components and assemblies necessary to meet the requirements listed in this document. Factors affecting these calculations shall include:

a. The SAA shall meet the power requirement as specified in Tables I and II at five years at an operating voltage of 127 Volts at or below the maximum power point.

b. Rotational drives, deployment mechanisms, and retention assemblies shall be included in the Ps calculations.

c. Failure rates for each element and failure mode shall be defined.

3.3.3.1 Reliability Assessment

A reliability assessment is required for the EOS Spacecraft to evaluate various design configurations and assess the probability that the EOS mission will be successful.The subcontractor shall perform a reliability assessment in accordance with the EOS Subcontractor Performance Assurance Requirements, 20004280. This assessment shall use the methodology and guidelines found in Astro Space's Ground Rules and Assumptions for Reliability Assessments, 20008608.

3.3.3.2 Failure Modes and Effects Analysis (FMEA) and Critical Items List (CIL)

A FMEA shall be performed to identify potential failure modes, the susceptibility of subcontractor–delivered flight hardware to these failure modes, and the effects these failure modes will have on the operation of the subcontractor's flight hardware on the EOS mission.

A CIL shall be maintained by the subcontractor throughout the EOS program.

The subcontractor shall perform the FMEA and CIL in accordance with the EOS Subcontractor Performance Requirements, 20004280. The FMEA shall use the methodology and guidelines found in Astro Space's Ground Rules and Assumptions for Failure Modes Effects Analysis (FMEA), 20008607.

3.3.3.3 Worst–Case Analysis

Worst–case analysis shall be performed for critical parameters that are subject to variations (of individual parameters or combinations of parameters) that could degrade performance. The analysis shall set all parameters and environmental stresses for the operation being evaluated at worst–case conditions and shall have adequate design margins. Worst–case thermal analysis shall consider the effects of worst–case possible combinations of array orientation, solar radiation, albedo, earthshine, eclipse conditions, ascent conditions, and degradation of thermal surfaces over the life of the mission.

No design changes shall be initiated due to the results of the worst–case abnormal operational analysis without prior Astro Space approval.

3.3.3.4 Parts Stress Analysis

Electrical, electronic, and electromechanical parts utilized for the panel assemblies shall be subjected to stress analysis, for conformance with the derating policy of MIL–STD–975H and GSFC–PPL–19. In the event of conflict MIL–STD–975H shall take precedence over GSFC–PPL–19.

The analysis shall be performed at the most stressful condition specified for each part application.

3.3.4 Maintainability

The SAA shall require no maintenance during the specified operational lifetime and storage period.

3.3.5 Environmental Conditions

3.3.5.1 Temperature Limits

Temperature limits are defined to be the minimum and maximum temperatures and the maximum temperature gradients of critical components of the SAA under normal operating conditions.. Critical components are defined as those components whose failure could affect the performance of the SAA or the Spacecraft. All critical components shall be shown by test and analysis (Critical Components Lifetime Analysis) that they will meet the worst–case temperatures and the specified number of thermal cycles for 7.5 years.

Temperature limits are to be determined by Astro Space and by the Subcontractor. Astro Space shall be responsible for defining the worst–case operating scenarios and the subcontractor shall be responsible for developing thermal models and performing thermal analyses.

The following temperature values shall be used for design, qualification, protoflight, and acceptance testing: (The worst–case temperature prediction shall include thermal analysis uncertainty, which shall be determined by the subcontractor and approved by Astro Space. This thermal analysis uncertainty shall comprise a minimum of 5°C and shall account for uncertainties associated with the low earth orbit environment and with thermo–optical and physical properties of materials. The array shall be designed to provide the required on–orbit power at the design temperature. This level of performance shall be verified during both qualification and acceptance testing.)

thermal analysis uncertainty included in predicts = **(TBD–2)**,
greater or equal to ±5°C

design = worst–case predict

acceptance = worst–case predict ±5°C

qualification =worse–case predict ±10°C

non–operating = –120/+100°C **(TBR–15)**

maximum rate of change = ±75°C/minute **(TBR–16)**

3.3.5.2 Design Temperatures

The subcontractor shall perform a thermal analysis (as detailed in Appendix I) to determine the operational design temperatures for the cases in Tables I and II at BOL and five years (excluding DEU, motors, and sensors). All temperatures derived from this analysis shall include the additional uncertainty defined in Section 3.3.5.1. For thermal analysis the nominal AM0 radiation flux intensity at one solar constant shall be 1372 W/m^2 (127.5 W/ft^2). The AM0 spectral distribution to be used for calculation and test shall be the Thekaekara spectrum.

3.3.5.3 Vacuum Bakeout

The vendor shall perform a vacuum bakeout of the SAA (non–operational) as follows:

a. Vacuum level: 1×10^{-5} Torr or less. The solar array shall not be exposed to a diffusion–pumped chamber environment.

b. Temperature: 100° ± 5°C.

c. Duration: The Solar Array shall be baked out until the change in the thermoelectrically cooled Quartz Crystal Monitor (TQCM) readings show an average of less than 1% increase over a five–hour period. The placement of the TQCM shall be documented in the test procedure and approved by Astro Space prior to start of reading.

d. Samples: The vacuum–bakeout procedure shall be monitored using TQCMs and witness plates. Before and after bakeout, small samples of adhesives shall be removed for Collected Volatile Condensable Material analysis (CVCM) per ASTM E 595–84.

e. Schedule: If the thermal cycling tests are performed in a vacuum environment, then bakeout may be performed in conjunction with, and preceding, thermal–cycling tests, as described in Section 4.8.3.2. Otherwise, bakeout shall be performed prior to final acceptance.

3.3.5.4 Atomic Oxygen

The SAA shall be protected against damage caused by atomic oxygen fluence levels associated with the 705 km orbit. Materials used to protect the solar array from atomic oxygen shall not generate contamination products as a result of the interaction with an atomic oxygen environment.

3.3.5.5 Transportability

The SAA and handling fixture, in its shipping and storage container, shall withstand, without damage or degradation, the handling and transportation environments as specified in IS20008501. Interface points shall be incorporated to allow for proper installation to Spacecraft per MICD20008514.

3.3.5.6 Plasma Discharge

The extent and effect of plasma discharge that may occur on the array during the life time (7.5 years) shall be initially analyzed. Based on this analysis, coupon–level tests will be performed by Astro Space to prove that the design has appropriate protection against the plasma environment as

specified in Table VI. A final analysis shall then be performed to confirm that the coupon–level tests verify the final array design decision. Astro Space approval of all design decisions shall be required. The SAA shall not give rise to glow discharges between the interconnects and the coverglasses when operating at any voltage between 0 Volts and the maximum open circuit voltage expected on eclipse exit while exposed to ambient plasma within the following density–temperature range. (See Table VI).

Table VI. Plasma Density—Temperature

LEO (Non–polar Regions)		
Particle	**Density**	**Temperature**
Electrons	$10^2 - 10^6$ cm^{-3}	0–10 eV
Positive ions	$10^2 - 10^6$ cm^{-3}	0–1 eV

LEO (Polar Regions)		
Particle	**Density**	**Temperature**
Ambient electrons	$0 - 10^4$ cm^{-3}	0–10 eV
Ambient positive ions	$0 - 10^4$ cm^{-3}	0–1 eV
*High energy electron flux	$10^8 - 10^{10}$ cm^{-3} sec^{-1} Sr^{-1}	14 – 30 keV

* This occurs during periods of auroral arcs.

3.3.6 Radiation—Particulate and Electromagnetic

3.3.6.1 Particulate Radiation

The SAA shall be designed to survive the expected radiation environment for the EOS Spacecraft, predicted using the radiation models listed below, without degradation of performance below the levels expected based on (normalized) curves of radiation degradation for each of the parameters (Isc, Voc, Imp, Vmp, Pm), as supplied by the subcontractor.

a. AE8 Max model for trapped electrons in the energy range 0.05–6 MeV (From which Table VII has been derived).

b. AP8 Min Model for trapped protons in the energy range 0.1–450 MeV (From which Table VIII has been derived)

c. JPL Model 80% confidence level for solar protons in the energy range 1–100 MeV normalized to the 22nd solar cycle (From which Table IX has been derived).

Tables VII through IX shall be used to calculate the radiation fluence for the orbit as defined in Section 3.2.3.

Table VII. Trapped Electron Spectrum

Energy Level E (MeV)	Integral Fluence (Above E) (#/cm^2/day)	Differential Flux at E (#/cm^2/sec/MeV)
0.05	3.32e+10	2.76e+06
0.10	2.26e+10	2.15e+06
0.25	6.53e+09	8.64e+05
0.50	1.39e+09	1.36e+05
0.75	6.47e+08	2.33e+04
1.00	3.88e+08	9.14e+03
1.25	2.52e+08	5.15e+03
1.50	1.65e+08	3.34e+03
1.75	1.08e+08	2.20e+03
2.00	7.05e+07	1.41e+03
2.25	4.69e+07	9.06e+02
2.50	3.13e+07	6.45e+02
2.75	1.91e+07	4.53e+02
3.00	1.18e+07	2.76e+02
3.25	7.14e+06	1.70e+02
3.50	4.39e+06	1.07e+02
3.75	2.52e+06	6.81e+01
4.00	1.45e+06	4.01e+01
4.25	7.86e+05	2.38e+01
4.50	4.28e+05	1.31e+01
4.75	2.22e+05	7.18e+00
5.00	1.17e+05	3.94e+00
5.50	2.60e+04	1.32e+00
6.00	3.58e+03	3.01e–01

Table VIII. Trapped Proton Spectrum

Energy Level,E (MeV)	Integral Fluence (Above E) (#/cm^2/day)	Differential Flux at E (#/cm^2/sec/MeV)
0.1	3.34e+08	5.50e+03
1.0	3.93e+07	2.08e+03
2.0	2.33e+07	1.19e+02
3.0	1.88e+07	4.28e+01
4.0	1.59e+07	2.71e+01
5.0	1.41e+07	1.80e+01
6.0	1.28e+07	1.14e+01
7.0	1.21e+07	7.51e+00
8.0	1.15e+07	6.36e+00
10.0	1.06e+07	4.87e+00
20.0	8.66e+06	1.80e+00
40.0	7.07e+06	8.29e–01
60.0	5.80e+06	6.72e–01
80.0	4.75e+06	5.48e–01
100.0	3.90e+06	4.56e–01
125.0	3.00e+06	3.65e–01
150.0	2.32e+06	2.78e–01
175.0	1.80e+06	2.13e–01
200.0	1.40e+06	1.64e–01
225.0	1.10e+06	1.27e–01
250.0	8.57e+05	9.94e–02
300.0	5.26e+05	6.16e–02
350.0	3.24e+05	3.67e–02
400.0	2.01e+05	2.31e–02
450.0	1.24e+05	1.09e–02

Table IX. Solar Flare Proton Spectrum

Energy Level E (MeV)	Integral Fluence (Above E) (#/cm^2)	Differential Flux at E (#/cm^2/MeV)
1	1.87e+11	3.0160e+10
5	4.40e+10	1.1373e+10
10	2.00e+10	2.5246e+09
30	4.60e+09	3.6526e+08
50	2.10e+09	1.1209e+08
60	1.45e+09	5.0562e+07
100	5.80e+08	6.6734e+06

Assumes 80% confidence; normalized to the 22nd solar cycle

(five year active; 0.28 Geomagnetic constant)

3.3.6.2 Magnetic Moment

Disturbance torque applied to the Spacecraft as a result of the intersection of the Earth's field by active conductors in the solar array shall be minimized by the adoption of appropriate wiring layouts. To minimize the magnetic moment, the wing loop areas for each string shall be minimized by running the wiring close to the circuit. Also, the subsections of a string should be arranged so that the neighboring subsection moments are opposite in sense and hence cancel. The residual moment for the wing shall not exceed 7.5 A.m2 about any axis.

3.3.6.3 Electromagnetic Radiation

The SAA shall be compatible with its specified operating environment and meet the requirements of the EOS Spacecraft, as specified by the EMI/EMC Control Plan, 20005869. The SAA vendor shall supply an EMI/EMC Control Plan in contractor format which details and documents the EMI design/manufacturing controls employed in the SAA.

The SAA shall be designed so as to minimize the electromagnetic radiation generated by differential AC currents flowing in any one of the circuits.

When a circuit is driven with a 300 mA, 200 kHz sine wave current **(TBR–17)** the radiated emissions measured 3 m from the face of the circuit shall not exceed 44dB μV/m **(TBR–18)**.

3.3.6.4 Meteoroid and Space Debris

The Solar Array Assembly shall be subjected to the meteoroid and space debris environments specified in IS200008501. The loss factor as specified in Table III shall be used for power calculation and shall be verified by analysis. As a result of this analysis, with the agreement of Astro Space, this value may be amended.

The design shall maintain stated strength and stiffness requirements allowing for the possible degradations due to the micrometeorite and space debris environment as defined in IS20008501. This shall be demonstrated by analysis. The analysis shall be approved by Astro Space.

3.3.6.5 Single Event Upset (SEU) and Single Event Latchup

All components of the SAA shall comply with the cosmic ray charged particles and single event latchup requirements specified in IS20008501.

3.3.7 Circuit Assembly

All manufacturing processes and materials used shall be in accordance with Astro Space approved procedures and specifications. Each circuit shall be visually inspected prior to bonding to the substrate. All welding or soldering points shall be inspected to determine defects.

3.3.7.1 Cell Output Selection

The gallium arsenide on germanium solar cells shall be appropriately matched or classed, as necessary, to provide SAA panel electrical performance as specified in Section 3.3.1.7.1. This selection shall be performed on the measurement of the output of the cells at the operating voltage. All cells used on the SAA shall fully meet the cell specification generated by the subcontractor and approved by Astro Space.

3.3.7.2 Coverglass Installation

The coverglass shall be securely bonded to each individual solar cell to ensure an environmentally stable lamination. The coverglass shall overlap the cell edges to protect them from radiation. Adhesive bubbles of less than 1.0mm diameter, voids and delaminations are acceptable provided their total accumulated area does not exceed one percent of the total cell area.. The adhesive shall be subject to Astro Space approval.

3.3.7.3 Cell Identification

It shall be possible to identify all cells within a circuit. Suitable records shall be maintained so that it is possible to trace every cell back to the production lot.

3.3.8 Panel Assembly

The panel (subassembly) design shall divide the SAA into electrical circuits with identical configuration and a maximum circuit current of 2.5 Amps using the BOL Best Case loss factors as specified in Table III and assuming Beta angle is zero degrees during highest solar intensity. The maximum number of circuits for the wing shall be 26. The preferable design shall have an integer number of circuits per SPA.

3.3.8.1 Solar Cells

The gallium arsenide on germanium solar cells shall be procured in accordance with a Astro Space approved performance specification (to be supplied by the subcontractor). Broken, cracked, or otherwise mechanically or electrically defective cells shall not be used or shall be replaced. The final array cell complement shall be free from measurable, performance affecting defects. The subcontractor shall submit a procedure for cell repair and replacement on the blanket, to be approved by Astro Space.

3.3.8.1.1 Type Approval Test (TAT)

Sixty flight–representative cells shall be tested under an approved (JPL or equivalent) Type Approval Test program. The cells shall be at bare, Connector Integrated Cell (CIC) and Solar Cell Assembly (SCA) level. The tests shall be for performance and mechanical integrity under wide–ranging environmental conditions representative of pre–launch, launch and on–station (7.5 years) worst–case conditions. The TAT test plan must be reviewed and accepted by GE. In place of a TAT, a qualification report for the exact cell specification may suffice with Astro Space approval.

3.3.8.2 Solar Cell Coverglass

The coverglass shall be procured in accordance with a Astro Space approved performance specification (to be generated by subcontractor). The coverglass thickness shall be optimized to protect the solar cells from radiation degradation. Edge chips and corner chips are acceptable provided that the accumulated area of these chips does not expose more than 0.5 percent of the active solar cell area of a single cell. Any exposed solar cell area shall be covered with coverglass adhesive.

3.3.8.3 Adhesive

All adhesives shall be in accordance with Astro Space approved Material and Process specification 20008650. To provide assurance against defective batches of adhesive, a test sample of each mixture shall be prepared and examined for appropriate physical characteristics. Manufacturer's recommended adhesive shelf life and storage conditions shall be maintained.

3.3.8.4 Cell and String Interconnects

Interconnects between cells shall be of a design so that the overall loss or partial loss of strings due to interconnect failure meets the reliability requirement (Section 3.3.3) after five years. Appropriate protection of the interconnects from atomic oxygen attack and plasma discharge shall be used. String inter–connection to form the circuits shall be performed by the use of redundant wiring in both the power and return lines up to the SAA/SSU interface, ref. ICD20008604, in order to fulfill the reliability requirements of Section 3.3.3 after five years.

3.3.8.5 Wiring and Connectors

Wire type shall be selected in accordance with 20008648. All wiring shall be in accordance with the requirements of NHB 5300.4. Connectors shall be selected in accordance with IS20008501 and shall withstand the effects of plasma discharge if applicable.

3.3.9 Secondary Standard Solar Cells

Four secondary standards shall be provided by the subcontractor for calibration of the light source as defined in Section 4.8.2 to test SAA output. The standards shall be representative of the spectral response and efficiency of the production cells and shall be calibrated from a Astro Space approved primary standard. Standard cells shall be replaced whenever visual or electrical damage is evident. The secondary standards shall be delivered to Astro Space with SAA delivery.

3.3.10 Repair and Replacement of Cells

A set of replacement criteria shall be established and approved by GE. The design and construction of the array circuits shall provide the capability for removal and replacement of individual cells at any time up to launch on a deployed wing. The cell repair method shall be submitted to Astro Space for approval. The capability for replacement of solar cell array circuits; subunits of an SPA; and cracked or broken cells shall be included in the design. After repair, the requirements of this specification shall be met.

3.3.11 SAA Release Mechanisms

The design of the SAA to Spacecraft restraint release mechanisms (i.e., separation nuts, cable cutters) shall be the responsibility of the SAA subcontractor. The secondary support structure housing these mechanisms and interfacing to the Spacecraft truss nodes shall be the responsibility of the SAA subcontractor. The SAA shall be attached at the truss nodes as depicted in MICD20008514. The procurement, assembly, integration, and testing of the release devices shall be the responsibility of the SAA subcontractor. The design and attachment of the blanket box (containment box) and mast hold down mechanisms shall be the responsibility of the subcontractor. The procurement, assembly, and integration of the release devices for the blanket box shall be the responsibility of the SAA subcontractor.

3.3.11.1 Pyrotechnic Devices

All pyrotechnic devices used on the SAA shall be designed according to the requirements given in MIL–STD–1576. The pyrotechnic device shall be comprised of mechanisms and NASA Standard Initiator (NSI). The procurement, assembly and integration of any mechanisms used to separate the blanket box shall be the responsibility of the subcontractor. The mechanisms used at the interface of the SAA and Spacecraft structure attachment points shall be the responsibility of the subcontractor. The NSIs shall be provided by Astro Space as Government Furnished Equipment (GFE). The subcontractor shall define for Astro Space the type and quantities of NSI required for the proposed mechanisms. The subcontractor shall provide Astro Space with three additional sets of mechanisms for verification tests at Astro Space post–delivery. The power supply for the pyros shall be Astro Space responsibility in accordance with GIS IS20008501 and shall supply a maximum of 10 Amps **(TBR–19)** at a voltage of 28 ±7 V **(TBR–20)**. The flight command for initiation of the deployment sequence and firing of all pyrotechnics shall be the responsibility of Astro Space.

3.4 Design and Construction

3.4.1 Materials, Processes, and Parts

All materials, processes and parts utilized in the design and construction of the SAA used on the EOS Program shall be selected and controlled in accordance with 20004280. In addition, all program approved materials and processes shall be selected and controlled in accordance with the Program Authorized Materials and Processes List, 20008650. All program approved parts utilized on the EOS Program shall be in accordance with the Program Authorized Parts List, 20008648.

3.4.1.1 Approved Standard Parts, Materials and Finishes

Wherever possible, approved standard parts and materials shall be used. Approved standard parts, derating factors and screening are listed in 20008648. Approved standard finishes are listed in 20008650. Application of materials and finished shall be in accordance with 20008650.

3.4.1.2 Approval of Non–Standard Parts, Materials and Finishes

Parts, materials or finishes which are not approved standard items must be submitted for approval as early as possible in the design phase, in accordance with 20004280.

3.4.1.3 Parts, Materials and Finishes List

A parts, materials and finishes list shall be submitted for approval prior to the Critical Design Review (CDR). Each item shall be keyed to indicated the source of its approval, i.e., by Non–Standard Parts Approval Form or 20008648.

3.4.2 Properties of Materials

For design purposes, material structural properties for metals shall be in accordance with MIL–HDBK–5D, and for plastics, in accordance with MIL–HDBK–17, Parts 1 and 2. Properties not given in these documents shall be obtained by testing the materials or from other Astro Space approved data.

3.4.2.1 Magnetic Materials

Magnetic materials shall be avoided whenever possible to minimize the overall magnetic dipole of the component. The subcontractor shall list magnetic materials intended for use on the SAA and shall obtain Astro Space approval for such use. Where it is necessary to use magnetic materials, they shall be arranged in a manner such as to minimize the resultant residual dipole vector.

3.4.2.2 Contamination Control

The SAA shall be delivered to Astro Space at cleanliness level of 500A (per MIL–STD–1246) in accordance with the EOS Contamination Control Plan (see Attachment 1, Table 5 from this plan). Also, the vendor shall submit a contamination control plan. All contamination requirements shall conform to the EOS Subcontractor Performance Assurance Requirements 20004280.

3.4.3 Nameplates and Product Marking

The SAA and its components shall be marked for identification in accordance with MIL–STD–130B. Conspicuous markings or labels shall be affixed to Spacecraft hardware or hardware packages. Nameplates shall contain, as a minimum, the following:

a. Astro Space Part No. and Rev.No.

b. Nomenclature

c. Serial No.

d. Manufacturer's Name FSCM (Code Ident) Number

e. Astro Space Contract Number

3.4.4 Interchangeability

Refer to Section 4.2.1.3 of WS20008514.

3.4.5 Safety

The design of the Spacecraft SAA shall be in accordance with the safety requirements of the EOS Subcontractor Performance Assurance Requirements 20004280.

(This page intentionally left blank.)

4 QUALITY ASSURANCE PROVISIONS

The requirements for the formal verification of the performance, design and construction of the supplied equipment shall be as specified in this section. These requirements define the extent to which the equipment must demonstrate capability to meet the design and performance requirements specified in Section 3 of this document. The subcontractor's quality assurance program shall be in accordance with 20004280.

The requirements detailed in this Section address verification responsibilities, methods, phases, levels and documentation. Also included are certification and implementation requirements and a requirements versus verification cross reference matrix.

For procured items, paragraphs represent the minimum verification requirements. The subcontractor may also perform verifications of selected requirements in additional phases, utilizing additional methods and/or at additional levels than defined herein. Any additional verification shall conform to the method, phase, and level definitions contained herein.

4.1 General

4.1.1 Responsibility for Verification

The subcontractor shall verify compliance with all requirements specified in Section 3 of this document unless the statement of work specifies otherwise. The subcontractor shall inform Astro Space of all test schedules; Astro Space reserves the right to witness all verification testing. Astro Space will not delay a test for witness purposes unless a request for delay is made in writing.

4.1.2 Testing Locations

All purchased equipment verification (qualification and final acceptance) testing shall be performed at the subcontractor's facility except otherwise stated in the Statement of Work.

4.2 Verification Methods

The method of verification—test, demonstration, analysis, or inspection—for each requirement of Section 3 and the test object of which the test will be performed shall be defined in a Astro Space approved test plan (see Table X for verification methods matrix). Unless otherwise specified, verification will be conducted at atmospheric pressure (1×10^5 Pascals) and at an ambient temperature of $20° \pm 5°C$. The unit shall be at this temperature for a minimum of two hours before proceeding with any test or measurement.

4.2.1 Analysis/Similarity (1)

Analysis is a verification method utilizing techniques and controls such as mathematical models, prior test data, simulations, or analytical assessments. Verification by a similarity analysis is acceptable if the subject article is similar or identical in design, manufacturing process, and quality control to another article that has been previously verified to equivalent or more stringent criteria.

Table X. Verification Cross Reference Matrix

Paragraph	Specification Requirement	Verification Method	Verification Phases	Verification Level
3.1.1	Mechanical Functions	1,2,3,4	A2,B,C,D	A,S
3.1.2	Electrical Functions	1,3,4	A2,B,C,D	U,A,S
3.2	SAA Design Requirement	1,2,3,4	A2,B,C,D	U,A,S
3.2.1.1	Mechanical Interface Requirement	1,2,3,4	A2,B,C,D	A,S
3.2.1.2	Electrical Interface Definition	2,3	A2,B,C,D	A
3.2.1.3	Thermal Interface Definition	1,3	A2,B,C	A
3.2.2	Major Component List	2	A2,B,C	A
3.2.3	Orbit/Configuration Definition	1	A2	A
3.3	Characteristics	1,2,3,4	A1,A2,A3,B, C	C,U,A,S
3.3.1.1.1	Alignment Reference	1,2,3,4	A2,B	A,S
3.3.1.1.2	Alignment Budget	1,2,3,4	A2,B	U,A,S
3.3.1.1.3	Thermal Distortion	1,3,5	A3,A2,B	C,U,A
3.3.1.1.4	Solar Snap Disturbance	1,3,5	A3,A2,B	C,A
3.3.1.1.5	Aerodynamic Drag	1	A2	A
3.3.1.2	Motor Torque Margin	1,3,4	A2,B	U,A,C
3.3.1.2.1	Deployment Time	1,3,4	A2,B	U,A
3.3.1.3	Impact Torque	1,3,4	A3,A2,B	U,A,S
3.3.1.4	Latching	1,3,4	A3,A2,B	U,A,S
3.3.1.5	Mechanical Redundancy	2,3	B,A2	A,U
3.3.1.6.1	Operating Life	1,2,3,4	A1,A2,B	C,U,A
3.3.1.6.2	Storage Conditions	1,2,3,4	A2,B,C,D	A
3.3.1.7.1	SAA Sizing	1,3,4	A2,B	U,A
3.3.1.7.2	Power Analysis	1	A2,B	U,A,S

Verification Method:
1 – Analysis/Similarity
2 – Inspection
3 – Demonstration
4 – Test
5 Coupon testing only
6 Test responsibility of Astro Space
N/A Not applicable

Verification Phases:
A – Qualification
A1 QTM
A2 – Protoflight
A3 ETM
B Acceptance (if option on second wing is exercised)
C– Integrated Systems (if optional tasks are exercised)
D – Prelaunch Checkout (if optional tasks are exercised)

Verification Level:
C – Coupon or Component
U – Subassembly
A – Array Assembly
S Spacecraft (Astro Space responsibility)

Table X. Verification Cross Reference Matrix (Continued)

Paragraph	Specification Requirement	Verification Method	Verification Phases	Verification Level
3.3.1.7.3	Telemetry	1,2,3,4	A2,B,C,D	U,A,S
3.3.1.7.4	Capacitance	1,3,4	A2	U,A
3.3.1.7.5	Inductance	1,3,4	A2	U,A
3.3.1.7.6	Impedance	1,3,4	A2	U,A
3.3.1.7.7	Reverse Biasing	1,4,5	A1,A2,B	C,U
3.3.1.7.8	Sequential Shunt Unit	2,3	A2,B,C	U,A
3.3.1.7.9	DEU	1,2,3,4	A2,A3,B,C,D	C,U,A,S
3.3.1.7.10	SAA Blanket	1,2,3,4	A1,A2,B,C	C,U,A,S
3.3.1.7.11	Blanket Box (Electrical)	1,2,3,4	A2,B,C,D	C,U,A,S
3.3.1.8.1	Blanket Box (Mechanical)	1,2,3,4	A2,B,C,D	U,A,S
3.3.1.8.2	Mast, Deployment Motor, Canister	1,2,3,4	A2,B,C,D	C,U,A,S
3.3.1.8.3	Elevation Hinge Assembly	1,2,3,4	A2,A3,B,C,D	U,A,S
3.3.2.1.1	Mass	1,4	A2,B	C,U,A
3.3.2.1.2	Center of Mass	1,4	A2,B	A
3.3.2.1.3	Center of Pressure	1	A2,B	A
3.3.2.2	Size	1,3	A2,B,C	A,S
3.3.2.3	Damping	1,4	A2	A
3.3.2.3.1	Stiffness	1,4	A2,B	U,A
3.3.2.3.2	Inertias	1	A2	A
3.3.2.4.1	FEM Requirements	1,4	A2	A
3.3.2.4.2	Design Loads	N/A	N/A	
3.3.2.4.2.1	Launch Loads	1,4	A2,B	C,U,A,S
3.3.2.4.2.2	Deployed Loads	1	A2	U,A

Verification Method:
1 – Analysis/Similarity
2 – Inspection
3 – Demonstration
4 – Test
5 Coupon testing only
6 Test responsibility of Astro Space
N/A Not applicable

Verification Phases:
A – Qualification
A1 QTM
A2 – Protoflight
A3 ETM
B Acceptance (if option on second wing is exercised)
C– Integrated Systems (if optional tasks are exercised)
D – Prelaunch Checkout (if optional tasks are exercised)

Verification Level:
C – Coupon or Component
U – Subassembly
A – Array Assembly
S Spacecraft (Astro Space responsibility)

Table X. Verification Cross Reference Matrix (Continued)

Paragraph	Specification Requirement	Verification Method	Verification Phases	Verification Level
3.3.2.5	Stress Corrosion	1	A2	C,U
3.3.3	Reliability	1	A2	C,U,A,S
3.3.3.1	Reliability Assessment	1	A2	C,U,A,S
3.3.3.2	Failure Modes and Effects Analysis and Critical Items List	1	A2	C,U,A,S
3.3.3.3	Worst–Case Analysis	1	A2	C,U,A,S
3.3.3.4	Parts Stress Analysis	1	A2	C,U
3.3.4	Maintainability	1,3	A2,B	A,S
3.3.5.1	Temperature Limits	1,4	A2,B	C,U,A
3.3.5.2	Design Temperatures	1	A2,B	C,U,A
3.3.5.3	Vacuum Bakeout	4	A2,B	U,A
3.3.5.4	Atomic Oxygen	1,5	A3	C
3.3.5.5	Transportability	1,2,3	A2,B	A
3.3.5.6	Plasma Discharge	1,6	A1,A2,B	C,U
3.3.6.1	Particulate Radiation	1	A2,B	C,U
3.3.6.2	Magnetic Moment	1,4	A2,B	U
3.3.6.3	Electromagnetic Radiation	1,4	A2,A3,B,C	C,U,S
3.3.6.4	Meteoroid and Space Debris	1,6	A1,A2,B	C
3.3.6.5	Single Event Latchup	1	A2,B	C,U
3.3.7	Circuit Assembly	2	A1,A2,B	C
3.3.7.1	Cell Output Selection	2	A1,A2,B	C
3.3.7.2	Coverglass Installation	2,	A1,A2,B	C
3.3.7.3	Identification	2	A1,A2,B	C

Verification Method:
1 – Analysis/Similarity
2 – Inspection
3 – Demonstration
4 – Test
5 Coupon testing only
6 Test responsibility of Astro Space
N/A Not applicable

Verification Phases:
A – Qualification
A1 QTM
A2 – Protoflight
A3 ETM
B Acceptance (if option on second wing is exercised)
C– Integrated Systems (if optional tasks are exercised)
D – Prelaunch Checkout (if optional tasks are exercised)

Verification Level:
C – Coupon or Component
U – Subassembly
A – Array Assembly
S Spacecraft (Astro Space responsibility)

Table X. Verification Cross Reference Matrix (Continued)

Paragraph	Specification Requirement	Verification Method	Verification Phases	Verification Level
3.3.8	Panel Assembly	1,2,3,4	A1,A2,B	C,U,A
3.3.8.1	Solar Cells	2	A1,A2,B	C,U,A
3.3.8.1.1	TAT	1,4	A	C
3.3.8.2	Solar Cell Coverglass	1,2	A1 A2,B	C,U,A
3.3.8.3	Adhesive	2,3	A1,A2,B	C,U,A
3.3.8.4	Cell and String Interconnects	1,2,4	A1,A2,B	C,U,A
3.3.8.5	Wiring and Connectors	1,2,3	A1,A2,B	C,U,A
3.3.9	Secondary Standard Solar Cells	1,2,4	A1,A2,B	C,U,A,S
3.3.10	Repair and replacement of cells	3	A1,A2,B	C,U,A,S
3.3.11	SAA Release mechanisms	1,2,3,4	A2,B,C	C,A,S
3.3.11.1	Pyrotechnic Initiators (Astro Space responsibility)	1,2,3,4	A2,B,C	C,A,S
3.4.1	Materials, Processes, and Parts	2,3	A1,A2,B	C,U,A
3.4.1.1	Approved Standard Parts	2,3	A1,A2,B	C,U,A
3.4.1.2	Approval of Non–standard Parts	2,3	A1,A2,B	C,U,A
3.4.1.3	Parts,Materials, Finishes List	2,3	A1,A2,B	C,U,A
3.4.2	Properties of Materials	1,3,4	A1,A2,B	C,U,A,S
3.4.2.1	Magnetic Materials	1,3	A1,A2,B	C,U,A
3.4.2.2	Contamination Control	3,4	A2,B	A,S
3.4.3	Nameplates and Product Marking	3	A2,B	A
3.4.4	Interchangeability	N/A		
3.4.5	Safety	3	A2,B	A,S

Verification Method:
1 – Analysis/Similarity
2 – Inspection
3 – Demonstration
4 – Test
5 Coupon testing only
6 Test responsibility of Astro Space
N/A Not applicable

Verification Phases:
A – Qualification
A1 QTM
A2 – Protoflight
A3 ETM
B Acceptance (if option on second wing is exercised)
C– Integrated Systems (if optional tasks are exercised)
D – Prelaunch Checkout (if optional tasks are exercised)

Verification Level:
C – Coupon or Component
U – Subassembly
A – Array Assembly
S Spacecraft (Astro Space responsibility)

4.2.2 Inspection (2)

Inspection is a method of verification of the physical characteristics of the array (or components of the array) that determines compliance without the use of dedicated equipment. Inspection also includes the inspection of design documents, material lists, plans, etc, to verify the requirements have been met. A dimension or an observation shall be made and recorded showing compliance to the requirements of Section 3 as noted in Table X.

4.2.3 Demonstration (3)

Demonstration is a qualitative method of verification that evaluates the principles of the array by observation. Demonstration is used with or without special test equipment or instrumentation to verify required characteristics such as operational functioning, workmanship, and transportability.

4.2.4 Test (4)

Test is a method of verification wherein performance requirements are verified by measurement during or after the controlled application of functional and environmental stimuli. These measurements require the use of certified and calibrated laboratory equipment and test support items and procedures.

4.3 Verification Phases

Verification of each Section 3 requirement shall be performed during one or more of the phases defined in the following subsections. The specific verification phases used for each requirement in Section 3 are to be provided in matrix format in Table X.

4.3.1 Qualification Verification (A)

4.3.1.1 Qualification Test Model (QTM) Verification (A1)

Component, assembly, or sub–assembly qualification is required on all hardware not previously space flight qualified and/or whose design is complex and unproven. This testing phase verifies the performance requirements under environmental conditions which are more severe, i.e., higher levels, longer duration than flight acceptance testing. Qualification tested hardware shall not be used as flight hardware. QTM verification is designated as A1 under the test/level column of Table X.

4.3.1.2 Protoflight Verification (A2)

Protoflight hardware includes "flight hardware" which has not been previously qualified for space flight or does not have a proven design. This testing phase verifies the performance requirements under environmental conditions which are more severe, i.e., higher levels, same duration, than flight acceptance testing. The protoflight unit may be used as flight hardware. Protoflight verification is designed as A2 under the test/level column of Table X.

4.3.2 Acceptance Verification (B)

Flight acceptance hardware is exposed to environmental test levels which are essentially equal to predicted flight exposure levels. Acceptance tests include performance demonstrations and environmental exposures to screen out manufacturing defects, workmanship errors, incipient failures and other performance anomalies not readily detectable by normal inspection techniques or through ambient functional tests.

4.3.3 Integrated Systems (C)

Integrated Systems is applicable to the hardware of the array that can be tested at system (Spacecraft) level after integration has taken place.

4.3.4 Prelaunch Checkout (D)

Prelaunch checkout is applicable to the hardware of the array that can be tested at the launch site without the risk of degrading the performance of the array.

4.4 Verification Environment

4.4.1 Test Equipment Verification

Unless otherwise specified herein, instruments and test equipment used to measure performance characteristics shall be in accordance with paragraphs 8.17.3 and 8.17.4 of 20004280.

4.4.2 Verification Conditions

Unless otherwise specified by Astro Space or a requirement, e.g., Verification Specification PS20005404, all verification tests shall be conducted at ambient conditions of temperature, humidity, and pressure prevailing at the test facility.

4.5 Verification Documentation

The verification process shall be documented by plans, procedures, and reports as specified in the System Test Plan required by the Statement of Work. All plans and procedures require approval by Astro Space.

4.6 Certification Requirements

Certification is a subset of verification that formally verifies that the design and manufacturing process will produce equipments that meet the specified requirements in the specified operational environments. Any changes in configuration after certification will require re–certification for the effected requirements. All hardware and software verified against this specification shall be certified as defined in the System Test Plan prior to delivery. Certification may be accomplished by one or more of the verification methods of paragraph 4.2. A certificate of compliance is required with the end item data package. The minimum requirements for the end item data package are defined in paragraph 8.23 of 20004280.

4.7 Requirements/Verification Cross Reference Matrix

Table X identifies the required method(s) of verification and the recommended phase of verification for each Section 3 requirement. It also identifies at what level of hardware development cycle the verification is accomplished.

4.8 Specific Verification Tests

4.8.1 Pyro Shock

All assemblies in the SAA that are shock sensitive (e.g., alignment springs, motors, electrical switches, relays etc.) shall receive pyrotechnic shock tests. These tests shall be performed with the assembly mounted upon a fixture and either a pyrotechnic device activated or a specified weight dropped and guided by a cylindrical tool onto an anvil which in turn is attached to the structure close to the assembly in question. Other assemblies shall be qualified on the basis of the system level pyrotechnic shock test. Test level: the control accelerometer shall conform to the shock response spectra of Table **(TBS–1)**.

4.8.2 Electrical Tests

a. Absolute Power Performance Test

An absolute power performance test shall be performed at module level once the wing has been integrated to see if the acceptance criteria as defined in Section 3.3.1.7.2 are met. This shall take place after thermal cycling using a calibrated Large Area Pulse Solar Simulator (LAPSS). A secondary standard (Section 3.3.9) shall be used to check the flasher intensity. The result from the test shall be corrected to AM0 illumination (as defined below) and to 28°C. The corrected power should be greater or equal to the acceptance criteria allowing for a 2% measurement error in the absolute performance measurement.

Solar and Earth Radiation Definition:

1. Solar Radiation

   The nominal AM0 radiation flux intensity at one solar constant shall be 1353 W/m^2 (125.7 W/ft^2). The AM0 spectrum to be used for calculation and test shall be the Thekaekara spectrum.

2. Albedo

   The solar radiation diffusely reflected from the Earth is in the range of factor 0.311 to 0.336.

3. Earth Radiation (Earthshine)

   The average value of infrared Earth emission is in the range of 218.4 W/m^2 to 243.3 W/m^2 (20.3 to 22.6 W/ft^2) (Earth emitted value, not incident on the Spacecraft).

b. Absorptivity Test on Covered Cells

A sample of 10 flight standard covered cells shall be measured for solar absorption.

c. Absorptivity Test on Flexible Blanket

The front and rear of the bare blanket shall be measured for absorptivity at various wavelengths.

d. Substrate Dielectric

The substrate dielectric shall be tested for dielectric strength to ensure no dielectric breakdown.

e. Cell Circuit to Substrate Isolation

The insulation resistance between cell to substrate shall be measured at 500 volts. The resistance shall be greater than 20 M ohm.

f. Circuit Continuity

A multi–point continuity test shall be performed on all SAA circuits to ensure that all point–to–point wiring is in accordance with the panel electrical interconnection. There shall also be test points situated in the junction boxes to enable continuity of the power and return circuits into the spacecraft (via the SSU) to be tested without the need to disconnect flight connectors.

g. Diode Health Checks

All diodes (if used) shall be measured for forward and reverse characteristics. This will be performed before assembly onto the circuits. (Excludes diodes in SSU, Astro Space responsibility).

h. Temperature Sensor

The resistance of each temperature sensor shall be recorded while measuring the ambient temperature.

i. Magnetic Moment and EMI

A test shall be performed to prove compliance with Sections 3.3.6.2 and 3.3.6.3.

j. Dark I–V Testing

The blanket shall be capable of performing dark I–V tests to determine performance and continuity of all circuits. This testing shall be able to be performed at the subcontractor, at Astro Space post–delivery, and at Spacecraft launch site.

k. DEU

The DEU shall be treated as a component of the SAA and shall therefore undergo specific component level testing. As a minimum this shall include thermal cycling between the operating temperatures and 3–axis random vibration testing as referenced in IS20008501 and PS20005404.

4.8.3 Thermal Cycling Tests

4.8.3.1 Thermal Cycle Qualification—Board Testing (Minimum requirements)

Qualification testing demonstrates that adequate margins exist in the final product to assure that specification requirements are met. Hardware shall be representative of flight hardware and shall be produced from the same drawings, using the same materials, tooling, and fabrication, assembly, and test methods as flight hardware, except as modified to accommodate minor changes that may be necessary to conduct the testing.

Two representative samples of the flight solar array blanket, known as the Qualification Boards, (or Q–boards) shall be manufactured. The Q–boards shall contain flight piece parts, materials, wiring and all other hardware to be used on the flight blanket. Cell string layout spacing and wiring shall follow the flight design as close as possible. As much of the jigs, fixtures and other testing, fabrication and test procedures and processes to be used for the flight panel assemblies as applicable shall be applied to the fabrication. A Q–board shall contain two strings of 80 solar cells each, two of the cells shall be cells representative of those repaired under the proposed cell repair method (Section 3.3.11). One Q–board shall be subjected to thermal cycling qualification testing (the other Q–board shall be delivered to Astro Space for environmental testing in nine months from contract award). A minimum of 40,000 thermal cycles are required. The cycles shall be between the qualification temperature limits listed in Section 3.3.5.1. After stabilization, the high temperature extreme shall be maintained for a duration equal to or greater than 5 minutes. For the blanket, the representative temperature shall be the solar cell temperature. The rate of temperature change shall be approximately equal to the maximum rate of temperature change listed in Section 3.3.5.1.

All samples of the solar array blanket shall be removed every 5,000 cycles from the chamber for full inspection, including a measurement of the resistance between the electrical circuit and the substrate.

Illumination tests shall be conducted under ambient conditions and AM0 illumination from a LAPSS solar simulator calibrated by a standard reference cell. Degradation in performance shall be less than 2 percent. Any defects or degradation discovered in the materials or assembly of the test articles shall be appropriately recorded and reported to Astro Space, before continuation of testing.

Materials comprising the substrate of the solar array blanket shall be tested at elevated temperatures for tolerance to atomic oxygen combined with ultraviolet light. A test plan shall be developed for approval by the Astro Space. Results from these tests will be used as checks against material properties used in the thermal models.

4.8.3.1.1 Q–Board Testing Pass/Fail Criteria

The Q–board will be deemed to have passed the thermal cycling test:

a. If no defects or degradation are discovered during inspection, or any defects or degradation that are reported are agreed (by the subcontractor and Astro Space) to be of just cosmetic importance and not detrimental to the design's ability to meet the performance of the specification.

b. If the resistance of the electrical circuits has not changed significantly outside that allowed for in the performance analysis.

c. If the output of the cells changes by no more than ±2% from the initial measurement.

4.8.3.2 Thermal Cycle Acceptance Testing

Acceptance tests demonstrate acceptable performance of protoflight and flight hardware over the specified range of mission requirements and reveal inadequacies in the manufacturing process such as workmanship, material, or quality. Performance measurements establish a baseline that can be used to assure that there are no data trends established in successive tests which indicate a constant degradation of performance within specification limits that could result in unacceptable performance in flight.

All protoflight and flight arrays shall be subjected to 2 thermal cycles over the non–operating temperature range listed in Section 3.3.5.1, followed by 10 thermal cycles over the temperature ranges specified in Section 3.3.5.1, at a pressure of less than 1×10^{-5} Torr. Protoflight hardware shall be cycled over the protoflight temperature limits, and flight hardware shall be cycled over the acceptance temperature limits. The rate of temperature change during cycling shall be approximately equal to the maximum rate of change listed in Section 3.3.5.1. The temperature extremes shall be maintained for a minimum of 4 hours after stabilization. The resistance of the cell circuits to the substrate at 500 V shall be monitored and continuously recorded throughout the tests. A resistance of greater than 20 megohms shall be maintained. Illumination tests of the electrical performance of the array shall be conducted before and after thermal cycling. Degradation in performance shall be less than 2 percent. A full visual inspection shall also be performed to check for thermal cycling degradation of the hardware.

A quartz crystal micro–balance, witness mirrors, or equivalent shall be installed in the chamber to measure outgassing products.

4.8.4 Mechanical Tests

All mechanical subassemblies and components shall be tested under worst–case temperatures (as predicted by thermal analysis) to verify mechanical and electrical operation. In addition all mechanisms on the SAA shall be tested after thermal cycling in 4.8.3.2 has occurred. Alternative testing at component level shall take place only where testing at SAA level is inappropriate. In this case the test procedure for the component should be approved by Astro Space.

4.8.4.1 Mast Assembly

At assembly level, the mast assembly shall be tested for proper deployment and stiffness requirements. These will be performed under worst–case temperatures.

4.8.4.2 Elevation Hinge Assembly

The elevation hinge assembly shall be tested by the subcontractor for correct deployment, damping, and latching. These will be performed under worst–case temperatures in a vacuum of less than 10^{-5} Torr. The elevation time shall not exceed 2 minutes, with simulated harness routing around hinge.

4.8.4.3 Blanket Tensioning Mechanism

The Blanket Tensioning Mechanism shall be tested for both correct mechanical and electrical operation at all stages of array integration. This shall include the testing of the "end–of–deployment" indicator. If springs are used for blanket tensioning then a life–test of 53,000 cycles shall be performed at component level on 3 flight representative samples under ambient conditions. The test plan for this test shall be approved by Astro Space.

4.8.4.4 SAA Deployment

The complete SAA (including the Elevation Hinge Assembly) shall be capable of full deployment tests at ambient temperatures using a suitable deployment rig to be performed at the subcontractor and Astro Space **(TBD–3)**.

4.8.4.5 Vibroacoustic Tests

The SAA shall be mounted on a test fixture which has no major resonances below 2000 Hz. The mounting of the SAA shall duplicate the final SAA mounting configuration. Sinusoidal vibration tests shall be performed over the range and at levels specified in IS20008501 and PS20005404, once per axis, in each of the three mutually perpendicular axes.

In the event of minor fixture resonances below 2000 Hz, either the resonances shall be damped, or the input vibration amplitude adjusted to ensure testing at the levels specified in the stated document

During the test, the component shall be operated in the same manner as during the launch phase and monitored for malfunction in accordance with the requirements of the detailed test procedure (approved by GE).

4.8.4.5.1 Sine Vibration

The SAA shall be subjected a 3–axis protoflight sinusoidal vibration (5–50 Hz) in accordance with the requirements and levels defined for the SAA and referenced in IS20008501 and 20005404.

4.8.4.5.2 Modal Survey

The stowed SAA shall be subjected for modal survey tests in accordance with the requirements defined for the SAA and referenced in PS20005404. The orthogonality of the measured modes to the analytically predicted modes shall be determined to evaluate the adequacy of the test. The modal test shall determine the resonant modes up to 100 Hz. The corresponding analytical model shall be developed to predict all primary frequencies and shall agree with the dynamic test results to within 5% for the first mode and 10% for all other significant structural modes up to 100 Hz.

4.8.4.5.3 Acoustic Test

The stowed SAA shall be subjected to acoustic environmental testing in accordance with the requirements defined for the SAA and referenced in IS20008501 and PS20005404.

4.8.4.6 Strength Test

Strength testing of the stowed SAA shall be performed to apply 1.25 times the predicted flight loads based upon the final design load cycle analysis. Testing shall be applied in each of three axes in

accordance with the requirements referenced in PS20005404 and IS20008501. Strength testing shall use one of the following three methods: static load testing, acceleration testing (via centrifuge), a sine burst testing (low–frequency dwell).

(This page intentionally left blank.)

5 PREPARATION FOR DELIVERY

5.1 Packaging and Preservation

Upon completion of all tests by the subcontractor, each device shall be placed in an individual handling container which provides protection at all handling points between the subcontractor's final inspection and Astro Space final installation. The external packaging for delivery shall insure that delivery by common carrier shall not result in physical damage, corrosion, or other deterioration or degradation resulting in unserviceable devices. All handling, storage, preservation, packaging and shipping shall be in accordance with 20004280.

(This page intentionally left blank.)

6 ABBREVIATIONS AND ACRONYMS

AM0	Air Mass Zero
BOL	Beginning of Life
CDR	Critical Design Review
CSS	Coarse Sun Sensor
CG	Center of Gravity
CIC	Connector Integrated Cell
CIL	Critical Items List
CVCM	Collected Volatile Condensible Material
DEU	Deployment actuator Electronics Unit
EHA	Elevation Hinge Assembly
EMI	Electromagnetic Interference
EOS	Earth Observing System
EOL	End of Life
ESD	Electrostatic Discharge
FCC	Flat Copper Cabling
FEM	Finite Element Model
FMEA	Failure Modes and Effects Analysis
GIS	General Interface Specification
ICD	Interface Control Drawing
JPL	Jet Propulsion Laboratory
LAPSS	Large Area Pulse Solar Simulator
LEO	Low Earth Orbit
PDR	Preliminary Design Review
Ps	Probability of Success
RCST	Reverse Current Screening Test
SAA	Solar Array Assembly
SAD	Solar Array Drive
SCA	Solar Cell Assembly
SEU	Single Event Upset
SPA	Solar Panel Assembly
SSU	Sequential Shunt Unit

SINDA	Systems Improved Numerical Differencing Analyzer
TAT	Type Approval Test
TBD	To Be Determined
TBR	To Be Reviewed
TBS	To Be Supplied
TMM	Thermal Mass Model
TQCM	Thermoelectrically Cooled Quartz Cooled Monitor

APPENDIX I

10 THERMAL MODELING

Thermal modeling is defined as the analyses used to predict the temperatures of critical components of the SAA. These analyses include hand calculations, property data, and SINDA87 and TRASYS22 thermal math models (TMM). The TMM must include sufficient detail to fully characterize the temperatures and temperature gradients of all critical components of the SAA during all conditions anticipated throughout the life of the SAA, i.e., launch and ascent, deployment, and in–orbit operation. The TMM must be capable of simulating both steady–state and transient conditions. A complete set of material property data shall be provided to Astro Space. This data base shall be identical to that used by the Subcontractor for thermal studies and should fully describe properties as functions of in–orbit exposure duration and temperature. Sources for this information, such as product data sheets shall be provided.

10.1 Thermal Math Models

The subcontractor shall construct math models relating to the thermal design cases for analyses of their assembly.

A surface model and a reduced thermal model shall be deliverable items, as they will be incorporated into Astro Space Spacecraft models for overall Spacecraft analysis. These models will be updated several times during the design phase of the assembly, and the final model will be required after thermal balance testing of the assembly has been completed.

The surface models will be incorporated into a surface model of the Astro Space Spacecraft. This integrated surface model will be subjected to simulations of various mission thermal environments including system level testing, launch, transfer orbit, and operational orbit. The principal end–products of the analysis are the radiation couplings and absorbed heat fluxes. The radiation interchange includes direct contributions from the sun, albedo, and Earth as well as the intra–network reflections and shadowing of this energy. The radiant flux from solar, Earth infrared, and albedo energy sources, which is absorbed by each surface, will be computed for each mission mode. The results of this unified environmental flux study will be available for use by the subcontractor for detailed thermal analysis of the assembly design and flight predictions.

The assembly reduced node thermal model will be integrated with the Astro Space Spacecraft thermal model in order to study the thermal response of the entire Spacecraft when it is subjected to various environments and modes of operation. The resulting heat transfer and temperatures at the assembly interfaces will provide the flight prediction boundary conditions for detailed assembly thermal models.

A detailed thermal math model of the assembly shall also be developed by the subcontractor with the objective of demonstrating that all internal assembly thermal requirements are met for all expected mission modes and testing. Although the model itself is not a deliverable item, a nodal description and the results of the analysis using the model shall be delivered to Astro Space as a test

of the adequacy of the reduced node thermal model and a means of making flight assembly predictions. The subcontractor shall use the detailed thermal model to predict and analyze the results of the assembly level thermal balance test, resulting in a validation of the math model.

10.2 Surface Model Requirements

a. The surface model shall be developed in a Thermal Radiation Analyzer System (TRASYS22) format.

b. The model shall be as small as is reasonably possible. The total number of surfaces is dependent on geometric complexity, but shall not exceed 50 surfaces.

c. The surface model shall form a completely closed volume. Even the surface area which is used for mechanical attachment to the spacecraft shall be represented by a surface. For example, a simple rectangular electronics package is represented by six rectangles.

d. In general, each external node of the assembly reduced node thermal model and detailed thermal model shall be represented by a surface or set of surfaces in the surface model. Any surface of special interest (i.e., a radiator) shall be modeled separately.

e. The local coordinate system shall be rectangular with the same orientation as the Spacecraft coordinate system. The origin of the local coordinate system shall be documented in the ICD.

f. All length dimensions shall be input in inches.

g. A unique numbering system for all TRASYS model identification numbers shall be used. The node numbering sequence allocated for the Solar Array Assembly starts with 91000 and ends at 91099. All components which are physically separate units shall be modeled separately with unique identification numbers within the unique number allocation. No ID number duplications are allowed.

h. Use of K–cards for surface thermo–optical property definition shall be used throughout.

10.2.1 Required Deliverable Surface Model Documentation

a. A table shall be supplied which lists each surface with:

1. A brief description;
2. The node number in the model;
3. The area in square inches;
4. The surface materials; and
5. The beginning–of–life and end–of–life values of solar absorptivity and IR emissivity of the surface materials, including thermal blanket outer layers. The values of the thermo–optical properties shall include tolerances for uncertainties and degradation.

b. A sample run of the TRASYS surface model of the assembly shall be supplied, assuming the worst EOL hot case with the assembly operational. The TRASYS input deck shall be provided both as a hardcopy and on magnetic tape, and the bulk data shall be provided on magnetic tape only. The files which shall be included on the tape include <filename>.INP, <filename>.LP, and <filename>.BCD. The following are acceptable formats for transmittal of thermal model input and outputs:

   1. If a VMS system is used, information shall be transmitted on a 9 track magnetic tape recorded at 1600 or 6250 bpi, and formatted in 80 character blocked records. The format may be either the VMS backup save set format, TK50, TK70, or TA90. If one of the fixed formats is not used, the 80 character records shall be blocked using an optional blocking factor no greater than 50, and the blocking factor shall be specified on the tape.

   2. If a UNIX system is used, information shall be transmitted on a 9 track magnetic tape recorded at 1600 or 6250 bpi, and formatted in 80 character blocked records. TAR format shall be specified.

   3. If a Sun UNIX system is used, information shall be transmitted on a TAR file written on a 1.44 Mbyte 3 1/2 in. floppy disk. The transmittal shall be compatible with Sun OS 4.1.2 or a later operating system (or equivalent).

   4. Information may also be transmitted on an IBM compatible PC, DOS formatted 1.44 Mbyte 3 1/2 inch floppy disk or a MACINTOSH Formatted 3 1/2 inch floppy disk.

c. Description of the model, any special modeling features used, and the rationale for the modeling methodology.

d. Detailed geometric plots of the surface model clearly showing all nodes and node numbers. The coordinate axes shall be clearly marked.

10.3 Reduced Node Thermal Model Requirements

The deliverable reduced node thermal model is a reduced version of the detailed thermal model. It shall provide similar results to the detailed model in the areas of interface heat flow (both radiation and conduction) and average temperatures of all components modelled.

a. The reduced node thermal model shall be developed in a Systems Improved Numerical Differencing Analyzer (SINDA) SINDA87 format.

b. The model shall be capable of steady–state and transient analysis.

c. The model shall be as small as is reasonably possible and shall not exceed 50 nodes. The node, conductor, and array numbering sequence allocated for the Solar Array Assembly starts with 9100.

d. All length dimensions shall be input in inches. All heat energy data shall be input in watts. Time units shall be in minutes. The Celsius temperature scale shall be used.

e. The overall energy balance summation of the reduced node thermal model with its boundaries shall agree with the detailed thermal model to 3 percent or better for any set of boundary conditions and internal power dissipations.

f. The heat transferred by conduction or radiation from node to node of the reduced node thermal model shall agree with the heat transferred from the corresponding nodes in the detailed thermal model to within 5 percent for any set of boundary conditions and internal power dissipations.

g. The temperature relationship between each flight temperature sensor and the reduced node thermal model node which contains the flight sensor shall be provided.

h. Power distribution and time–lines shall be provided for each expected mode of the mission and for ground testing. The time line should start at solar noon (subsolar point).

i. The following information relating to assembly thermal control heaters shall be supplied.

   1. Type of control (i.e., on/off ground command, thermostatic or proportional);
   2. Nodes where heat is dissipated;
   3. The node used for control;
   4. Operating temperature limits; and
   5. Rated power at applied voltage.

j. Each external node of the reduced node thermal model shall have a one–to–one correspondence with a surface or group of surfaces from the surface model.

10.3.1 Required Deliverable Reduced Node Thermal Model Documentation

The following information and data shall be supplied in fulfillment of the requirement of a deliverable reduced node thermal model:

a. A table shall be supplied which lists the following information for each surface modeled in the TRASYS surface model that appears in the reduced node mode:

   1. A brief description;
   2. The node number in the model;
   3. The area in square inches;
   4. The surface materials; and
   5. The beginning–of–life and end–of–life values of solar absorptivity and IR emissivity of the surface materials including thermal blanket outer layers. The values of the thermo–optical properties shall include tolerances for uncertainties and degradation.

b. A table shall be provided which lists the node number, a brief description, the mass (lbm), the specific heat ((W–min) / (lbm – degree C)), and the relationship to flight temperature sensors. All tables and lists of data shall have units clearly stated.

c. A descriptive list of the internal radiation and conduction couplings. Conduction couplings shall include a description of calculations, including material properties, assumptions made, and sketches.

d. Maximum and minimum electrical power consumed and thermal dissipation, if different. Thermal dissipation for each node for all operating modes (including survival) should be included.

e. The following information relating to assembly thermal control heaters shall be supplied.

    1. Type of control (i.e., on/off ground command, thermostatic or proportional);

    2. Nodes where heat is dissipated;

    3. The node used for control;

    4. Operating temperature limits; and

    5. Rated power at applied voltage.

f. A table shall be provided listing the relationship between the external nodes of the reduced node thermal model and the surfaces of the TRASYS surface model.

g. Any engineering assumptions made to reduce the model's complexity or to enhance the accuracy shall be stated. Any nodes using adiabatic surfaces or arithmetic nodes (zero mass nodes) shall be noted.

h. A table shall be provided which lists the maximum and minimum temperatures for each node for normal operating conditions, standby mode, and survival.

i. A sample run with an appropriate orbital environment shall be supplied to provide a set of reference temperatures that can be compared with the model as it will be used in the Spacecraft model. In the sample run, the assembly shall be modeled as at normal operation under hot case end–of–life conditions with a beta angle of 18 degrees.

j. All calculations necessary to analytically verify that the design satisfies the thermal requirements defined in the GIS and the assembly performance spec must be included. Any assumptions that must be made to facilitate the analysis shall be clearly stated. A written report including an abstract and a statement of conclusions and/or recommendations should accompany these calculations.

k. The SINDA input deck used for the sample run shall be provided both as hard copy and on magnetic tape, and the bulk data shall be provided on tape only. The files which shall be included on the tape include <filename>.DAT and <filename>.OUT. The following are acceptable formats for transmittal of thermal model input and outputs:

1. If a VMS system is used, information shall be transmitted on a 9 track magnetic tape recorded at 1600 or 6250 bpi, and formatted in 80 character blocked records. The format may be either the VMS backup save set format, TK50, TK70, or TA90. If one of the fixed formats is not used, the 80 character records shall be blocked using an optional blocking factor no greater than 50, and the blocking factor shall be specified on the tape.

2. If a UNIX system is used, information shall be transmitted on a 9 track magnetic tape recorded at 1600 or 6250 bpi, and formatted in 80 character blocked records. TAR format shall be specified.

3. If a Sun UNIX system is used, information shall be transmitted on a TAR file written on a 1.44 Mbyte 3 1/2 in. floppy disk. The transmittal shall be compatible with Sun OS 4.1.2 or a later operating system (or equivalent).

4. Information may also be transmitted on an IBM compatible PC, formatted 1.44 Mbyte 3 1/2 inch floppy disk or a MACINTOSH Formatted 3 1/2 inch floppy disk.

10.4 Guidelines for the Detailed Assembly Thermal Model

The detailed thermal model of the assembly is a mathematical representation of the heat transferred within the assembly and exchanged with the assembly's surroundings. This model accurately predicts the change in the heat flows and the resulting temperature changes for any alteration in the environment, internal power dissipation, or any other model parameter.

a. SINDA87 is the required thermal analysis software on which the model shall be based.

b. The size of the detailed thermal model is highly dependent on the thermal limits of the hardware being modeled. As a minimum, the detailed model shall demonstrate that all defined requirements for temperature and temperature gradients are met.

c. Every critical component or subassembly of the assembly and every flight temperature sensor should be represented by a node which adequately predicts its temperature.

d. For convenience, it is recommended that each external node have a one–to–one correspondence with a surface or group of surfaces from the TRASYS surface model.

e. Submodels may be used as required for finer thermal definition of local areas of the assembly.

10.4.1 Required Deliverable Detailed Assembly Thermal Model Data

a. A list shall be provided of all nodes and nodal descriptions. Sketches showing how nodes correspond to assembly components shall be included.

b. Analysis results for all major mission conditions and operating modes considered shall be provided.

(This page intentionally left blank.)

APPENDIX II

20 FINITE ELEMENT MODEL (FEM) REQUIREMENTS

a. MSC/NASTRAN format.

b. Model should be as small as possible and shall not exceed 500 dynamic degrees of freedom. Models are to be "full" models with no symmetry assumptions made to reduce model size. "Super elements" shall not be used.

c. Stowed SAA Model should accurately represent all dynamic modes up to 100 Hz when rigidly supported at the interface between the solar array and the spacecraft truss nodes. Deployed SAA Model should accurately represent all dynamic modes up to 15 Hz when rigidly supported at the SAD interface.

d. The solar array coordinate system must be rectangular with the same orientation as the Spacecraft coordinate system. Coordinate cards must be provided to establish the SAA system. The origin of the SAA local coordinate system shall be documented in the solar array finite element model documentation.

e. All constraints internal to solar array and Nastran displacement output must be in the solar array local coordinate system. No constraints external to the model upon submittal.

f. The NASTRAN bulk data deck should not contain BAROR, GRDSET, or PARAM AUTOSPC NASTRAN cards.

g. The specification of vector components for element coordinate system definition shall be used in lieu of referenced grid (i.e., CBAR, CBEAM).

h. U.S. Customary system of units shall be used. All mass data must be input in pounds (weight) units and converted to mass units (lbs–sec2/in) by using a PARAM WTMASS card. All length data must be in inches, time data in seconds, and weight data in pounds.

i. A solar–array–unique numbering system for all NASTRAN model identification numbers is to be used (for grids, coordinates systems, elements, property, and material IDs, as well as constraint and loading IDs). The grids, elements, properties, and materials IDs shall be between 60,001 and 69,999 and the coordinate system IDs shall be between 176 and 200. Both input and output displacement coordinate system IDs shall be defined in all NASTRAN GRID cards. Do not leave blank or default entries in field number 3 and 7 of the GRID cards. No ID duplications are allowed.

j. NASTRAN model must be capable of representing different dynamic response characteristics (if any) resulting from planned configuration changes between launch and deployment.

k. Any contingency weight shall be included in the support boundary interface.

20.1 Deliverable Model Validity Checks

The following computer runs and data checks shall be made and delivered to Astro Space to confirm the mathematical validity of the model:

a. Static analysis for unit gravity loading in each of the three axis directions. Reaction forces given by this analysis should equal the weight of the structure as given by the grid point weight generator (using PARAM WTMASS card).

b. Eigenvalue analysis for modes up to 100 Hz for stowed SAA and 15 Hz for deployed SAA with the solar array constrained at the SAA/support structure interface. Only those degrees of freedom actually used to attach the SAA to the support should be constrained in this analysis.

c. Eigenvalue analysis for the modes up top 100 Hz for stowed solar array and 20 Hz for deployed solar array in the free–free (unconstrained) condition. This analysis should be made both with and without the SUPORT NASTRAN bulk–data card. The rigid body modes from the analysis without the SUPORT card should yield frequencies less than 0.01 Hz for stowed SAA and 0.00001 Hz for deployed solar array.

d. Static analysis with unit–enforced displacements in all six degrees of freedom at one grid point. This analysis should yield equivalent unit values of displacement for all grid points whose displacement coordinate system is defined as being parallel to the input coordinate system of the referenced point. In addition, no element forces greater than 0.1 pound for moments greater than 1.0 inch–pound should be observed. A grid–point force balance should reveal no significant forces on any point in the model.

e. Grid–point weight generator (using PARAM WTMASS card) should yield correct weight, center of mass locations, and moments of inertia.

f. Use of case control command "SPFORCES=ALL" should reveal no constraint forces at points other than legitimate boundary condition constraint points.

g. "Epsilon Sub E" error check for each static subcase should be less than $10xE^{-11}$.

h. Static analysis with a unit temperature increase from ambient.

20.2 NASTRAN Model Verification

The NASTRAN model frequency predictions shall agree with dynamic test data to within 5 percent for the first mode and 10 percent for all other significant structural modes up to 100 Hz. A cross–orthogonality check between test and analytical mode shapes shall be required to be submitted to Astro Space.

20.3 Deliverable NASTRAN Model Data

Delivery of the NASTRAN Model Data shall be in accordance with WS2008514, statement of work for Solar Array Assembly.

APPENDIX III

30 DEU INTERFACE

30.1 Relay Drivers

Relay driver interface circuits shall be as shown in Figure 2.

30.1.1 Relay Driver Interface Characteristics

[1] When active, the driver circuit output voltage shall be +27 ±2 Vdc while driving a load at any current between 2 and 360 milliamps.

[2] The maximum load shunt capacitance shall be 0.2 microfarads (including cable and user relay capacitance).

[3] The relay driver shall be an open circuit with a maximum leakage current of 100 microamps when relay driver is in an off state.

[4] The active level shall be maintained for 55 ± 5 ms, exclusive of rise and fall times, when measured at amplitudes ≥25 V.

[5] The rise and fall time between +1 and +25 Vdc shall be 1.0 ± 0.5 milliseconds.

[6] The relay driver shall include overcurrent protection to terminate the command if the load current exceeds 425 ±15 milliamps.

[7] Relays used to send commands shall be capable of sending up to 10 commands per second.

30.1.2 Transient Suppression

Relay coils shall be shunted (e.g., by series redundant suppression diodes) so that the inductively–induced voltage on the interface line at the on–to–off transition does not exceed the coil return voltage by more than 1.5 V.

30.2 Analog Telemetry Interfaces

[1] Analog telemetry interfaces will sense voltage levels between 0 and 5 Vdc with 8 bits of resolution.

[2] The accuracy of the sample will be ±1.0% of full scale (+5V) ±0.5 LSB.

30.2.1 Passive Analog Interfaces

[1] Passive analog telemetry interfaces shall be driven with a sense current of 1.0 mA ±0.5%,

[2] and shall sense voltage levels between 0 and 5 Vdc.

[3] Passive analog interface circuits shall be as shown in Figure 3.

[4] The components and the harness shall each maintain primary and return isolation.

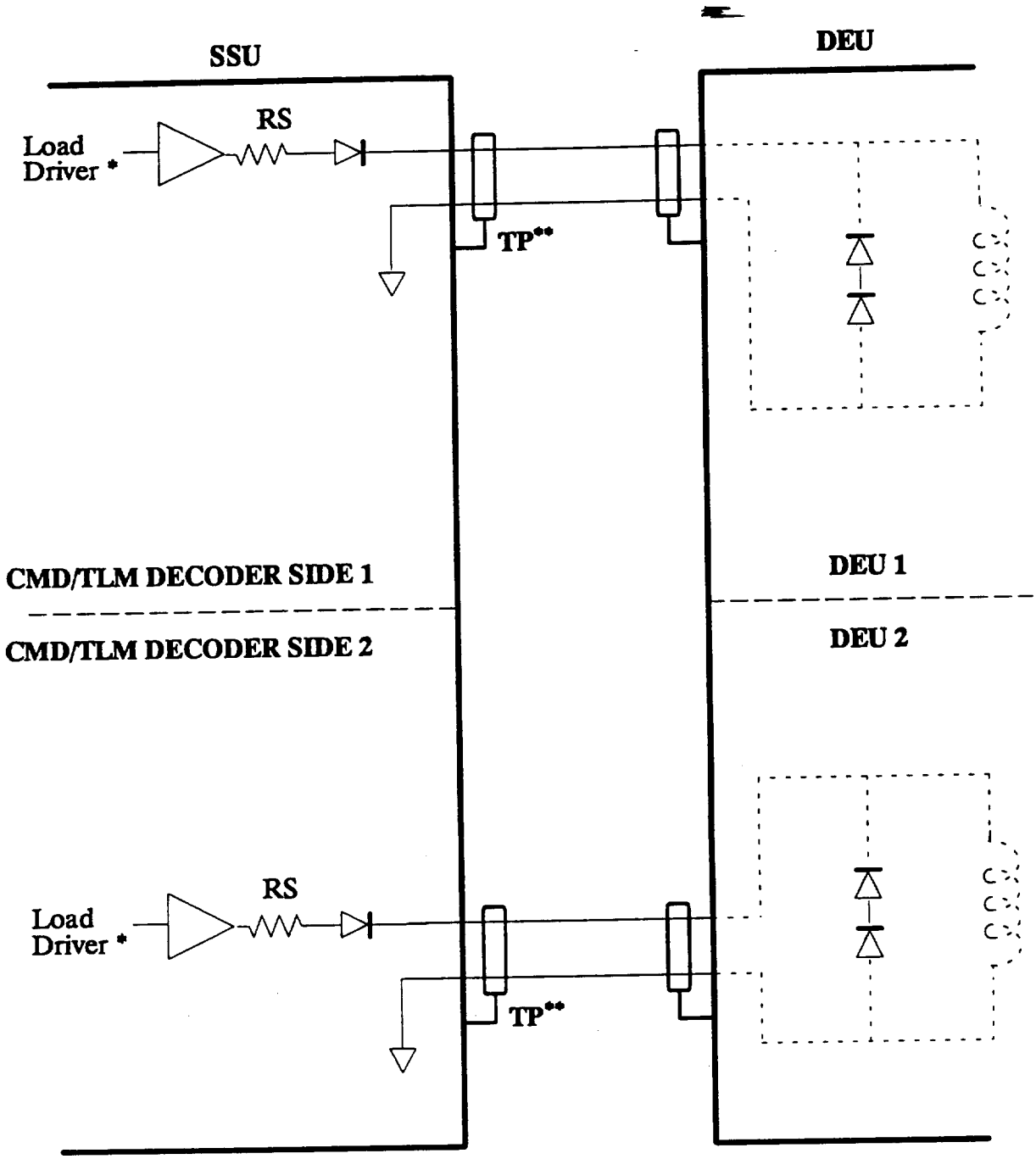

* Redundant drivers on SSU shall each be located in a separate IC package.

**Shield can be used for more than one twisted pair.

Note: Relay I/Fs will be sent in a wrapped bundle with a single shield.

Figure 2. Relay Driver Standard Interface Circuit

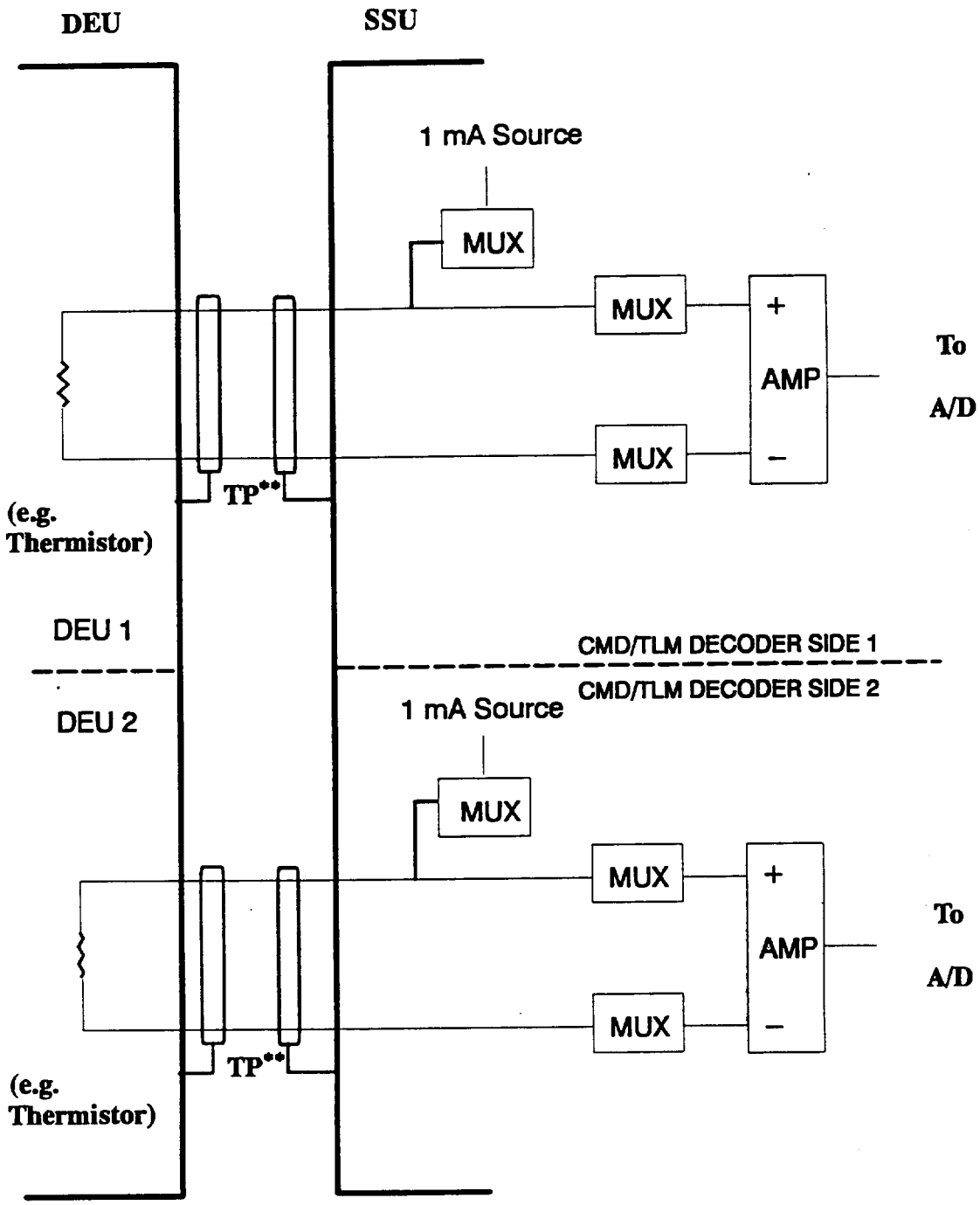

Note: Passive Analog I/Fs will be sent in a wrapped bundle with a single shield.

**Shield can be used for more than one twisted pair.

Figure 3. Standard Passive Analog Interface Circuit

30.2.2 Active Analog Interfaces

[1] Components using active analog telemetry interfaces shall transmit across the interface a signal plus a dedicated reference.

[2] Input impedance shall be greater than 1 megohm dc resistance when the signal is sampled and when the signal is not sampled.

[3] The component voltages shall not range beyond ±16 Vdc. (Any voltage in excess of 5 Vdc at the SSU interface will be reported as 5 Vdc in the telemetry stream.)

[4] Operational component voltages on the output lines shall be in the range of 0 to +5 Vdc with respect to DEU signal return.

[5] The common mode voltage range shall be –1 to +1 Vdc with respect to the SRP at the SSU interface.

[6] Active analog interface circuits shall be as shown in Figure 4.

30.3 Active and Passive Bi–level Interfaces

The requirements below apply to bi–level interfaces at which the component both accepts commands from and delivers telemetry to the Spacecraft Bus C&DH subsystem.

30.3.1 Passive Bi–level Interfaces

[1] The circuit "on" voltage shall be between+3 and 10 Vdc with respect to DEU signal return.

[2] The circuit "off" voltage shall be between 0 and 0.5 Vdc with respect to DEU signal return.

[3] The component portion of the interface shall accept a total input current up to 10.0 mA.

[4] The load capacitance at the SSU interface shall be less than 1.8 nanofarads.

[5] The component shall tolerate overvoltages in the range of –1 to 14 Vdc.

[6] Passive bi–level interface circuits shall be as shown in Figure 5.

[7] The components and the harness shall each internally maintain primary and return isolation.

30.3.2 Active Bi–level Interfaces

[1] The circuit "on" voltage shall be between+3 and 10 Vdc with respect to DEU signal return.

[2] The circuit "off" voltage shall be between 0 and 0.5 Vdc with respect to DEU signal return.

[3] Input impedance shall be 1 megohm dc resistance when the signal is and is not sampled.

[4] Operational component voltages on the output lines shall be in the range of –5 to +14 Vdc.

[5] The common mode voltage range shall be –5 to +10 Vdc with respect to the SRP at the SSU interface.

[6] Active bi–level interface circuits shall be as shown in Figure 6.

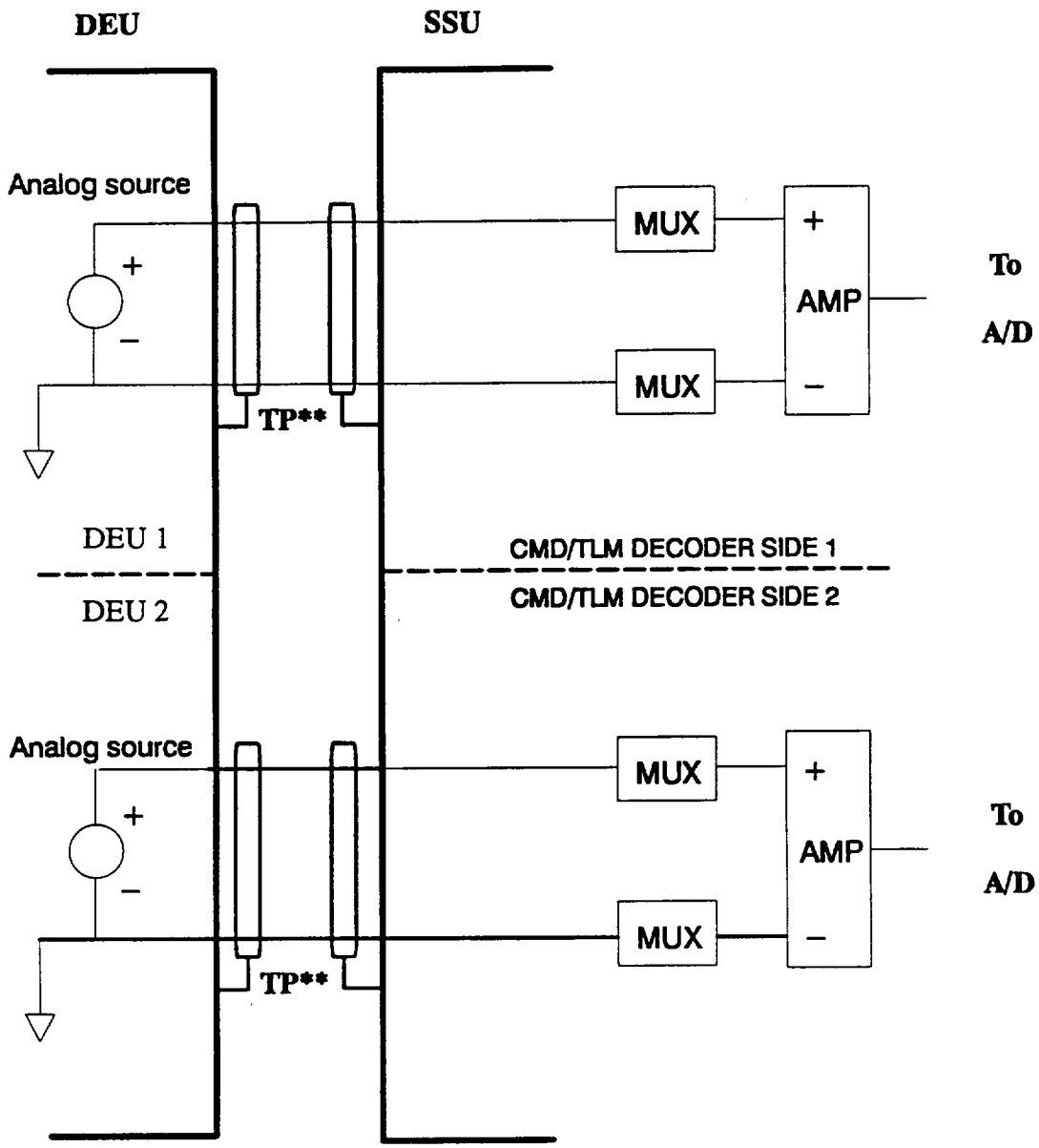

Note: Active Analog I/Fs will be sent in a wrapped bundle with a single shield.

**Shield can be used for more than one twisted pair.

Figure 4. Standard Active Analog Interface Circuit

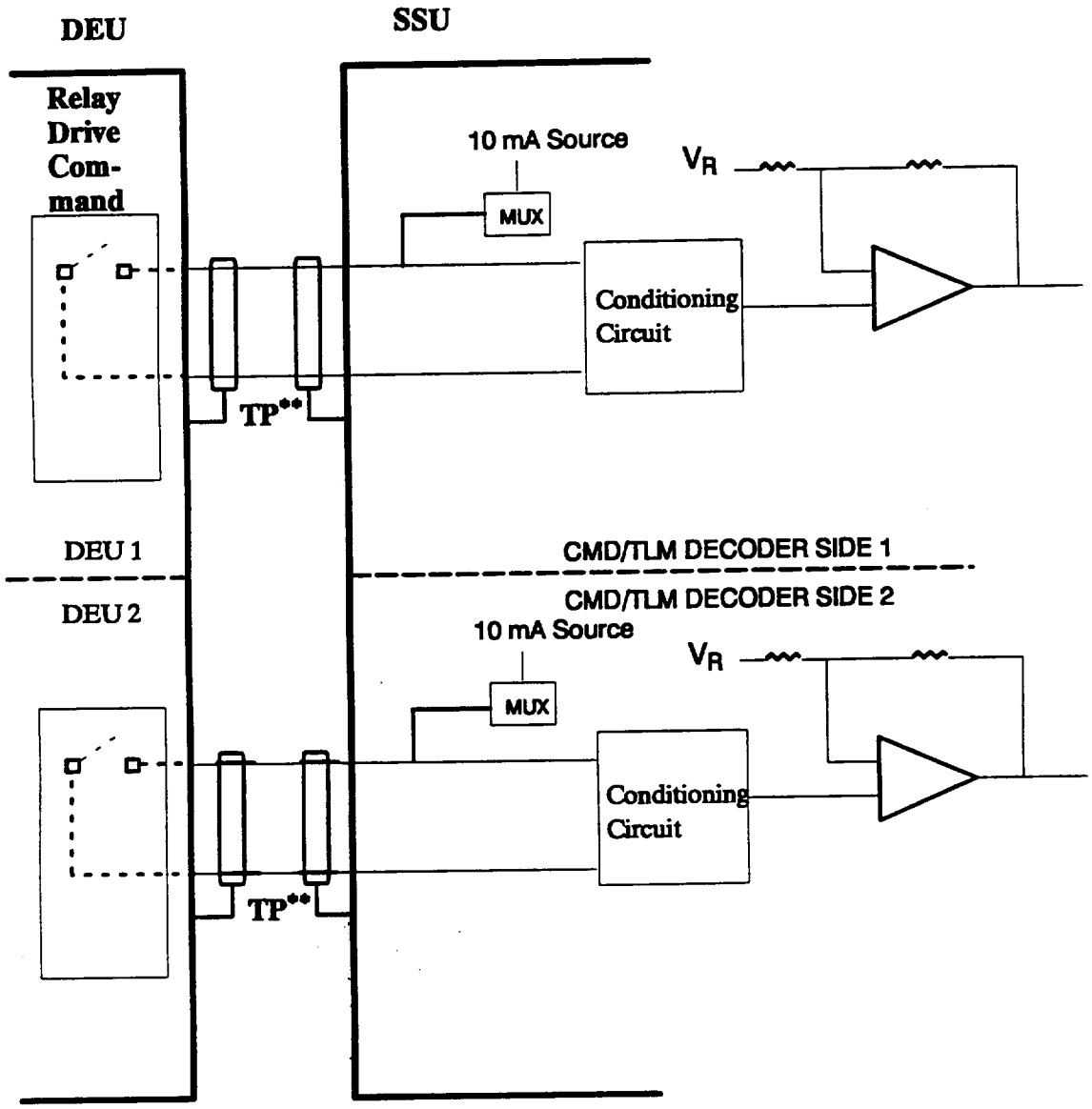

Note: Passive Bi–Level I/Fs will be sent in a wrapped bundle with a single shield

**Shield can be used for more than one twisted pair.

Figure 5. Standard Passive Bi–Level Telemetry Interface Circuit

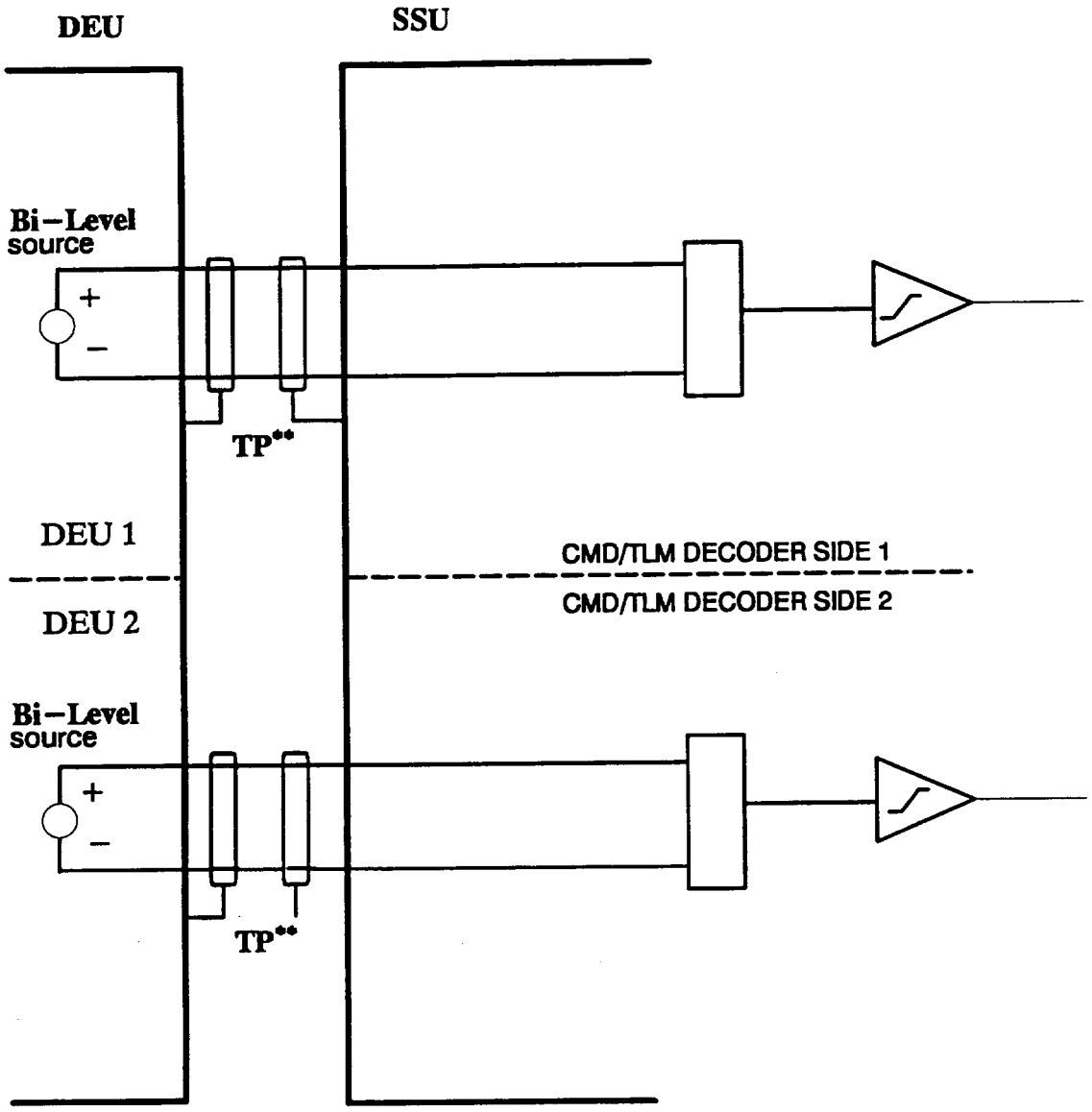

Note: Active Bi–Level I/Fs will be sent in a wrapped bundle with a single shield.

**Shield can be used for more than one twisted pair.

Figure 6. Standard Active Bi–Level Telemetry Interface Circuit

(This page intentionally left blank.)

PN20005869A
CAGE No. 49671
28 June 1993

Electromagnetic Compatibility (EMC) Control Plan for the EOS–AM Spacecraft (SEP–106)

Prepared under:
Contract NAS5–32500
NASA Goddard Space Flight Center
Greenbelt, Maryland 20771

Prepared by:
Martin Marietta Corporation
Astro Space
P.O. Box 800
Princeton, New Jersey 08543–0800

DCC062893

(This page intentionally left blank.)

REVISION LOG

This log identifies those portions of this document which have been revised since the original issue. Revised portions of each page, for the current revision only, are identified by marginal striping.

Revision	Paragraph Number(s) Affected	Rev. Date	Approval
Initial Issue		01/15/93	CM/GSR
A	Revised per ECN EOS0046.	06/28/93	CM/GSR

(This page intentionally left blank.)

TABLE OF CONTENTS

SECTION / PARAGRAPH	TITLE	PAGE
1	INTRODUCTION	1
1.1	Scope	1
1.1.1	EOS–AM Spacecraft Description	1
2	APPLICABLE DOCUMENTS	3
2.1	Government Documents	3
2.1.1	Specifications	3
2.1.2	Standards	5
2.1.3	Drawings	5
2.1.4	Other Publications	5
2.2	Non–Government Documents	5
2.2.1	Specifications	5
2.2.2	Standards	5
2.2.3	Drawings	6
2.2.4	Other Publications	6
2.2.5	Procedures	6
2.3	Reference Standards, Specifications, and Handbooks	6
3	EMC REQUIREMENTS	7
3.1	EMC Requirements Traceability	7
3.2	EMC Requirements Applicability	8
3.2.1	EMC Requirements List	9
3.2.2	EMC Requirements Matrix	9
3.3	EMC Requirements for the Launch Environment	9
3.3.1	Interface EMC Requirements	9
3.3.2	Launch Phase Lightning Threat	9
3.4	EMC Testing	9
3.5	General Requirement, Electromagnetic Compatibility	9

TABLE OF CONTENTS (Continued)

SECTION / PARAGRAPH	TITLE	PAGE
4	SPACECRAFT SYSTEM EMC REQUIREMENTS	21
4.1	Radiated Emissions (RE02, RE04)	21
4.2	Prime Power Quality, Ripple and Noise	21
4.3	Radiated Susceptibility and Definition of Susceptibility Criteria	23
4.3.1	Radiated Susceptibility, Electric Fields (RS03)	23
4.3.2	Radiated Susceptibility, Magnetic Fields (RS01)	26
4.3.3	Radiated Susceptibility, Electric Field On–Orbit Environment (RS03)	26
4.4	Conducted Susceptibility (CS01, CS02, CS06)	26
4.5	Not Used	26
4.6	Deployment EED Design	26
4.7	Equipment Magnetic Properties	26
4.8	Electromagnetic Interference Safety Margin	26
4.9	Superposition	30
4.10	Bonding	30
4.10.1	Connector and Shield Bonding	30
4.11	Grounding, References, and Isolation	31
4.11.1	Signal Reference Plane Grounding	31
4.11.2	Kinematic Mount Isolation	31
4.11.3	Thermal Blanket Grounding	31
4.11.4	Secondary Power Referencing	31
4.11.5	Signal Interfaces Grounding, References, and Isolation	31
4.11.6	Fault Wire Grounding	35
4.12	Wiring Design	35
5	INSTRUMENT EMI REQUIREMENTS	37
5.1	Radiated Emissions (RE02, RE04)	37
5.2	Conducted Emissions	37
5.3	Radiated Susceptibility and Definition of Susceptibility Criteria	37
5.3.1	Radiated Susceptibility, Electric Fields (RS03)	37
5.3.2	Radiated Susceptibility, Magnetic Fields (RS01)	42

TABLE OF CONTENTS (Continued)

SECTION / PARAGRAPH	TITLE	PAGE
5.3.3	Radiated Susceptibility, On–Orbit Environment (RS03)	44
5.4	Conducted Susceptibility (CS01, CS02, CS06)	46
5.5	Not Used	46
5.6	Not Used	46
5.7	Instrument Magnetic Properties	46
5.8	Electromagnetic Interference Safety Margin	46
5.9	Superposition	46
5.10	Bonding	46
5.10.1	Connector and Shield Bonding	49
5.11	Grounding, References, and Isolation	49
5.11.1	Signal Reference Plane Grounding	49
5.11.2	Kinematic Mount Isolation	51
5.11.3	Thermal Blanket Grounding	51
5.11.4	Secondary Power Referencing	51
5.11.5	Signal Interfaces, Grounding, References, and Isolation	51
5.11.6	Fault Wire Grounding	51
5.12	Interface Wiring and Harnessing	55
5.13	Requirement Deleted	55
5.14	Requirement Deleted	55
5.15	Instrument Ground Support Equipment EMC Requirements	55
6	EQUIPMENT/SUBSYSTEMS EMI REQUIREMENTS	57
6.1	Equipment Radiated Emissions (RE02, RE04)	57
6.2	Equipment Conducted Emissions	57
6.2.1	Prime Power Subsystem Power Quality, Self Generated Ripple and Noise	57
6.2.2	Secondary Power Users Reflected Ripple and Noise	57
6.3	Radiated Susceptibility and Definition of Susceptibility Criteria	57
6.3.1	Equipment Electric Fields Radiated Susceptibility Limit (RS03)	61
6.3.2	Radiated Susceptibility, Magnetic Fields (RS01)	63
6.3.3	Not Used	65

TABLE OF CONTENTS (Continued)

SECTION / PARAGRAPH	TITLE	PAGE
6.3.4	Communication Equipment Susceptibility Requirements/Definition of Susceptibility	65
6.4	Conducted Susceptibility (CS01, CS02, CS06)	65
6.5	Not Used	67
6.6	Deployment EED Design	67
6.7	Equipment Magnetic Properties	67
6.8	Electromagnetic Interference Safety Margin	67
6.9	Superposition	67
6.10	Equipment Bonding	67
6.10.1	Connector and Shield Bonding	68
6.11	Equipment Grounding, References, and Isolation	68
6.12	Equipment Interface Wiring and Harnessing	68
6.13	Antenna Port Conducted Emissions (CE06)	68
6.14	Receiver Antenna Port Conducted Susceptibility Requirements (CS03, CS04, CS05)	68
7	ELECTRICAL GROUND SUPPORT EQUIPMENT (EGSE)	73
8	EMC MANAGEMENT	75
8.1	Organization	75
8.1.1	EMC Engineering	75
8.1.2	Systems Engineering and Integration	76
8.1.3	Hardware Engineering, Systems Development, and IA&T	76
8.1.4	Subcontractor Management	77
8.1.5	Operations and Ground Systems	77
8.2	Equipment Considerations	77
8.2.1	GFE Equipment	77
8.2.2	Martin Marietta Equipment Design	77
8.2.3	Subcontractor Supplied Equipment	77
8.2.4	Instrument Equipment	78
8.3	Not Used	78

TABLE OF CONTENTS (Continued)

SECTION / PARAGRAPH	TITLE	PAGE
8.4	Program Documentation	78
8.4.1	EMC Control Plan Revision	78
8.4.2	EMC Test Plan	78
8.4.3	EMC Test Report	78
9	DEFINITIONS AND COMMONLY USED TERMS	79
9.1	Glossary	79
9.2	Acronyms and Abbreviations	81

LIST OF FIGURES

FIGURE	TITLE	PAGE
1	Spacecraft Diagram (Reference Only)	2
2	EMC Document Tree	4
3	Lightning Threat	19
4	Spacecraft Radiated Electric Field Emissions Limits (RE02)	21
5	Spacecraft Radiated Magnetic Field Emissions Limit	22
6	Spacecraft Prime Power Ripple Limits	22
7	Launch Radiated Susceptibility, Electric Field (RS03)	24
8	Spacecraft Generated Radiated Susceptibility, Electric Field (RS03)	25
9	Spacecraft Torquer Rod Magnetic Fields	27
10	Radiated Susceptibility, Electric Field On–Orbit Environment, ECAC Data (RS03)	28
11	Spacecraft Grounding Concept	32
12	Secondary Electronics Grounding and Data Interface Concept	33
13	Interface Signal Grounding	34
14	Instrument Radiated Electric Field Emissions Limits (RE02)	38
15	Instrument Radiated Magnetic Field Emissions Limit (RE04)	38
16	Instrument Conducted Emissions Limits	39
17	Instrument Common Mode Conducted Emissions Limit	39
18	Instrument Launch Electric Field Radiated Susceptibility Survival Limit (RS03)	40
19	Instrument Perform Electric Field Radiated Susceptibility Performance Limit (RS03)	41
20	Instrument Magnetic Field Radiated Susceptibility Performance Limit (RS01)	42
21	Spacecraft Torquer Rod Magnetic Fields	43
22	Instrument On–Orbit Environment Electric Field Levels, ECAC Data (RS03)	44
23	Instrument Conducted Susceptibility Limit (CS01/CS02)	47
24	Instrument Conducted Transient Susceptibility Limit (CS06)	47
25	Instrument Conducted Transient Susceptibility Limit (CS06 – Survive)	48
26	Instrument Conducted Transient Susceptibility Limit (CS06 – Perform)	48

LIST OF FIGURES (Continued)

FIGURE	TITLE	PAGE
27	Spacecraft Grounding Concept	50
28	Secondary Electronics Grounding and Data Interface Concept	52
29	Secondary Electronics Grounding and Data Interface Concept for ASTER to Collocated BDU	53
30	Interface Signal Grounding	54
31	Equipment Radiated Electric Field Emissions Limits (RE02)	58
32	Equipment Radiated Magnetic Field Emissions Limit (RE04)	58
33	Equipment Conducted Emissions Limits	59
34	Equipment Common Mode Conducted Emissions Limit	59
35	Prime Power System Power Quality, Self–Generated Ripple and Noise Limit	60
36	28 V Distributed Secondary Power Users Reflected Ripple and Noise Limit	60
37	Internal Equipment Radiated Electric Field Susceptibility Requirement (RS03)	62
38	External Equipment Radiated Electric Field Susceptibility Requirement (RS03)	62
39	Launch Radiated Electric Field Susceptibility Requirement (RS03)	63
40	Equipment Radiated Magnetic Field Susceptibility Requirement (RS01)	63
41	Spacecraft Torquer Rod Magnetic Fields	64
42	Conducted Susceptibility Requirement (CS01/CS02)	65
43	Equipment Conducted Transient Susceptibility Requirement (CS06 – Operate)	66
44	Equipment Conducted Transient Susceptibility Requirement (CS06 – Survive)	66
45	S–Band Omni CE06 Limits	69
46	S–Band HGA CE06 Limits	69
47	Ku–Band HGA Antenna Port Conducted Emissions Limits (CE06)	70
48	DAS Antenna Port Emissions Limit	70
49	S–Band Antenna Port Conducted Susceptibility Levels (CS04)	71
50	EMC Control Flow Diagram	76

LIST OF TABLES

TABLE	TITLE	PAGE
I	EMC Requirements Traceability	7
II	EMC Requirements Applicability	8
III	EMC Requirements List	10
IV	EMC Requirements Matrix	11
V	EMC Qualification Testing	20
VI	Spacecraft Susceptibility Requirements	23
VII	High–Level RF Sources for EOS–AM Spacecraft Launch	24
VIII	Spacecraft–Generated EOS–AM RF Sources	25
IX	On–Orbit Environment Electric Field Levels, ECAC Data (RS03)	29
X	Wire Design Requirements	36
XI	Instrument Susceptibility Requirements	40
XII	Spacecraft–Generated EOS–AM RF Sources	41
XIII	On–Orbit Environment Electric Field Levels, ECAC Data (RS03)	45
XIV	Wire Design Requirements	56
XV	Equipment Susceptibility Requirements	61

TBR LOG

ITEM	SECTION	PAGE	SUBJECT	RESP.	DUE
TBR–1	VI	23	Survive Level CS06	P. Callen	1/1/94
	XI	40			
	25	48			
TBR–2	XI	40	Perform Level CS06	P. Callen/GSFC	1/1/94
	26	48			
	44	66			

(This page intentionally left blank.)

1 INTRODUCTION

1.1 Scope

This Electromagnetic Compatibility (EMC) Control Plan defines the overall approach, planning, and design criteria to ensure compatible operation of the EOS–AM Spacecraft in accordance with the Contract End Item Specification SEP–101, PS20005396. This plan provides the EMC requirements and management organization procedures for the prime contractor, subcontractors and vendors as it relates to EMC control. The plan identifies the particular requirements in the design area for bonding, grounding, and shielding to control radiated and conducted emissions and susceptibility to specified EMI/EMC levels.

General Spacecraft and Instrument EMC requirements and traceability are identified in Section 3. The system level EMC requirements are specified in Section 4. Spacecraft component EMC requirements are specified in Section 6 and may reference paragraphs of Section 4. Instrument–specific EMC requirements are specified only in Sections 1 through 3 and 5. Spacecraft ground support equipment requirements are specified in Section 7.

EMI/EMC "Handbook" type information, Spacecraft Analysis and Prediction methods and design control procedures are documented in the EOS–AM Spacecraft EMC Design Handbook 20005400.

1.1.1 EOS–AM Spacecraft Description

The EOS–AM Spacecraft is to provide global coverage of the Earth due to its polar orbit and will support scientific instruments for daily applications and scientific investigations. Figure 1 (reference only) is a diagram of the EOS–AM Spacecraft showing the equipment modules required for Spacecraft housekeeping and their relationship to the Spacecraft that will support the payloads.

The Spacecraft will be at an elliptical transfer orbit of 550 x 705 km and will operate at a circular/polar/sun synchronous orbit of 705 km, 98.2 degrees, 10:30 (± 15 min.) descending node. Its payload will consist of the EOS–AM set. The Spacecraft will be launched via the Atlas IIAS with Titan IV ELV as an alternate.

The Spacecraft Prime Power Bus will be +120 VDC +4%/–2% with a load power requirement of 2.53 kW, a total Spacecraft end–of–life power requirement of 5 kW and a total solar array power of 5.7 kW at beginning of life. The Spacecraft is designed for single–fault tolerance and a five–year mission life.

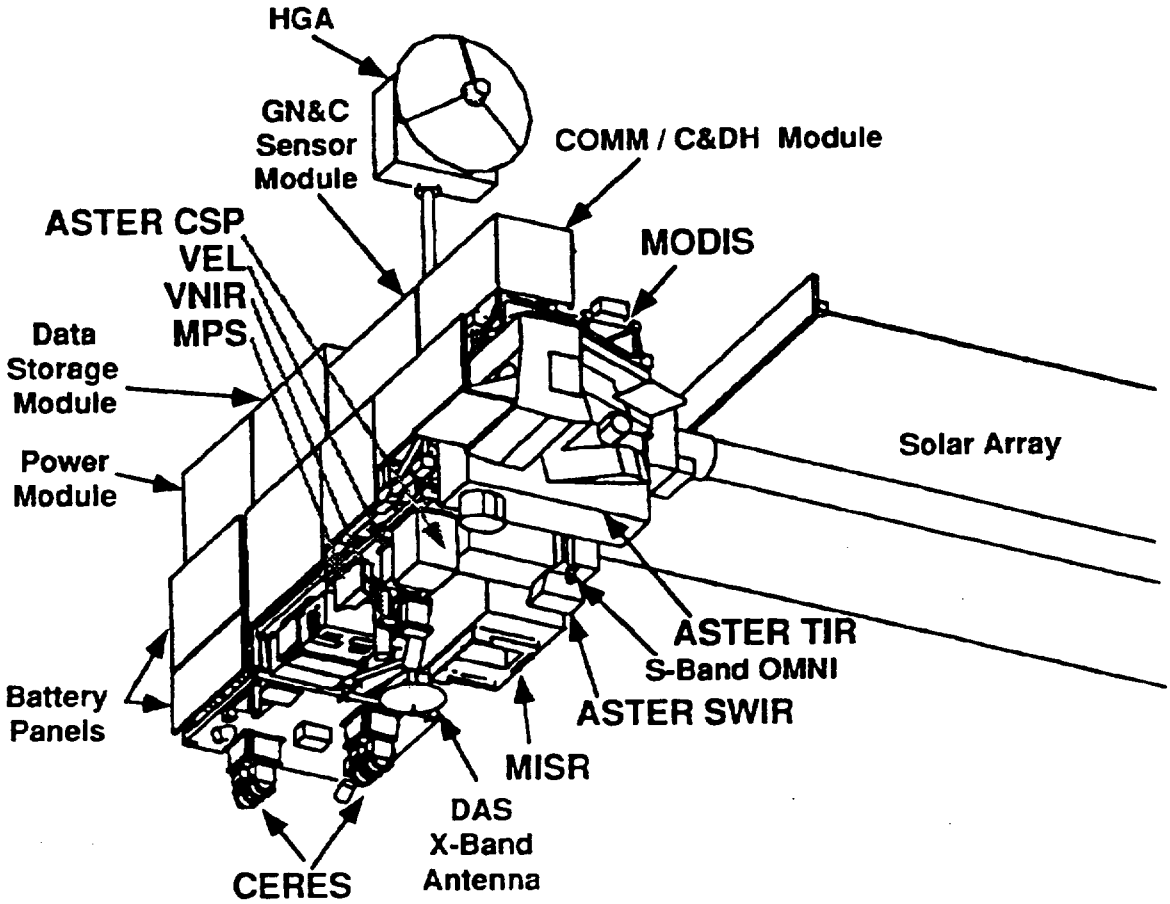

Figure 1. Spacecraft Diagram (Reference Only)

2 APPLICABLE DOCUMENTS

The applicable documents for Spacecraft EMC are listed in Section 2.1 and 2.2 below and in Figure 2 EMC Document Tree. The documents in Section 2.3 are reference documents for the program requirements as specified in this plan. The following documents of the exact issue shown, form a part of this specification to the extent specified herein. In the event of conflict between the documents referenced below and the contents of this specification, the contents of this specification shall take precedence.

2.1 Government Documents

2.1.1 Specifications

Federal

None

Military

WSMCR 127-1 Vol. 1	Western Space and Missile Center Range Safety Regulation
WSMCR 160-1, Change 1 22 October 1985	Western Space and Missile Center Radiation Program
MIL-B-5087B	Bonding, Electrical and Lightning Protection for Aerospace Systems
MIL-W-83575A	Wiring Harness, Space Vehicle, Design and Testing, General Specification for

NASA Documents

GSFC-421-10-01 30 October 1992	Requirements Document for EOS-AM Spacecraft
GSFC-420-05-02 08 November 1991	EOS Performance Assurance Requirements for the EOS Spacecraft
GSFC-420-05-01 02 August 91	EOS Program Performance Assurance Requirements General Instruments
GSFC-420-03-02 01 December 1992	General Instrument Interface Specification (GIIS) for the EOS Spacecraft
GEVS-SE January 1990	General Environmental Verification Specification for STS and ELV, GFSC
JSC-07636 November 1975	Space Shuttle Program Lightning Protection Criteria Document, Rev A, NASA, L.B. Johnson Space Center
NASA NHB 5300.4(3G)	Requirements for Interconnecting Cables, Harnesses, and Wiring

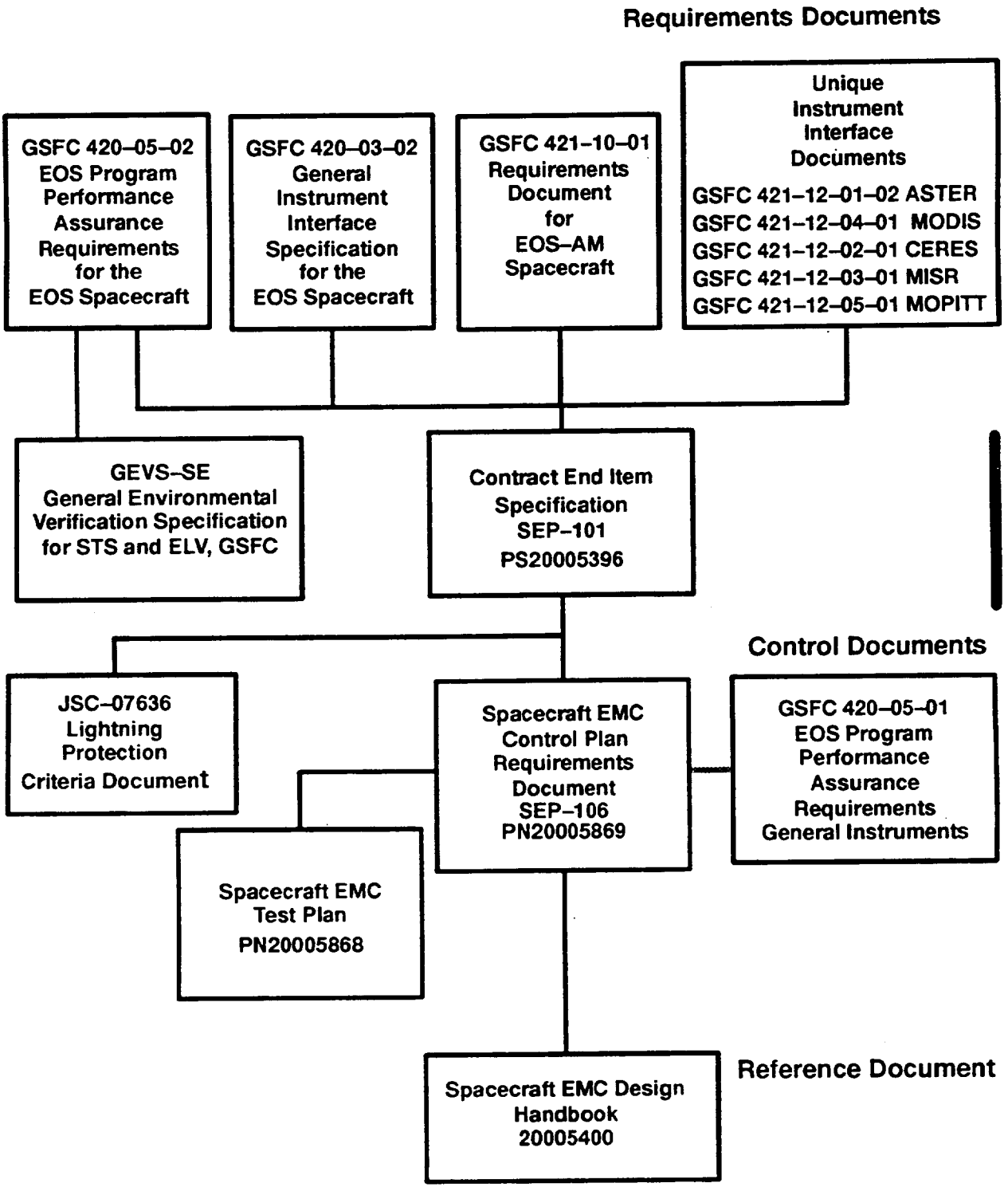

Figure 2. EMC Document Tree

2.1.2 Standards

Federal

None

Military

MIL–STD–461C 04 August 1986	Electromagnetic Emissions and Susceptibility Requirements for Control of EMI
MIL–STD–462, Notice 1	Electromagnetic Interference Characteristics, Measurement of
MIL–STD–1541A	EMC Requirements for Space Systems
MIL–STD–1576	Electro–Explosive Subsystem, Electrically Initiated Design Requirements and Test Methods

Other Government Agency

None

2.1.3 Drawings

None

2.1.4 Other Publications

2.2 Non–Government Documents

2.2.1 Specifications

PS20005396 15 April 1993	Contract End Item Specification for the EOS–AM Spacecraft, SEP–101
IS20008503 02 November 1992	Launch Vehicle System to EOS–AM System Interface Requirements Document, ICD–103
IS20008501 30 December 1992	General Interface Specification for the EOS–AM Spacecraft (GIS)
Source:	Martin Marietta Astro Space P. O. Box 800 Princeton, NJ 08543–0800

2.2.2 Standards

None

2.2.3 Drawings

None

2.2.4 Other Publications

PN20005868 01 March 1992	EOS–AM Electromagnetic Compatibility Test Plan
Source:	Martin Marietta Astro Space P. O. Box 800 Princeton, NJ 08543–0800

2.2.5 Procedures

None

2.3 Reference Standards, Specifications, and Handbooks

20005400 15 January 1993	Electromagnetic Compatibility (EMC) Design Handbook for the EOS–AM Spacecraft
NASA Reference Publication 1008 October 1977	Lightning Protection of Aircraft, Fisher and J. A. Plumer
ARP–1481	Corrosion Control and Electrical Conductivity in Enclosure Design
AFSC–DH–1–4	AFSC Design Handbook, Electromagnetic Compatibility
MIL–STD–1541A	EMC Requirements for Space Systems

3 EMC REQUIREMENTS

3.1 EMC Requirements Traceability

Table I shows the traceability of EMC requirements between the GEVS, the PAR and the EMC Control Plan.

Table I. EMC Requirements Traceability

Test	PAR Table	GEVS Paragraph #	EMCCP Paragraph #	Type
Conducted Emission Tests				
DC Power Leads	3–2	2.5.2.1.a	5.2, 6.2	CE
DC Power Leads	3–2	2.5.2.1.b	5.2, 6.2	CE
Spikes DC Power	3–2	2.5.2.1.c	5.2, 6.2	CE
Antenna Terminals	3–2	2.5.2.1.e	6.13	CE
Power Quality Ripple and Noise	3–2		4.2	CE
Radiated Emission Tests				
DC Magnetic Flds/Prop. System	3–2	2.5.4.1, 2.5.4.5	4.7	RE
DC Magnetic Flds/Prop Component	3–2	2.5.4.1, 2.5.4.5	5.7, 6.7	RE
AC Magnetic Field (System)	3–2	2.5.2.2.b	4.1	RE
AC Magnetic Field (Component)	3–2	2.5.2.2.b	5.1, 6.1	RE
Electric Fields (System)	3–2	2.5.2.2.c&d	4.1	RE
Electric Fields (Component)	3–2	2.5.2.2.c&d	5.1, 6.1	RE
Antenna Port Emission Tx Levels	3–2	2.5.2.2.e	4.1, 6.13	RE/EMC
Antenna Port Emission Spurious	3–2	2.5.2.2.f	4.1, 6.13	RE/EMC
Conducted Susceptibility Tests				
Power Line	3–2	2.5.3.1.a	5.4, 6.4	CS
Intermodulation Products	3–2	2.5.3.1.b	6.14	CS
Signal Rejection	3–2	2.5.3.1.c	6.14	CS
Cross Modulation	3–2	2.5.3.1.d	6.14	CS
Power Line Transients	3–2	2.5.3.1.e	5.4, 6.4	CS
Radiated Susceptibility Tests				
Electric Fields and General EMC	3–2	2.5.3.2.a	4.3, 5.3, 6.3	RS/EMC
Perform EMC with Spacecraft Tx	3–2	2.5.3.2.b	4.3, 5.3, 6.3	RS/EMC
Unintentional Electric Field	3–2	2.5.3.2.c	4.3, 5.3, 6.3	RS/EMC
Magnetic Field Susceptibility	3–2	2.5.3.2.d	4.3.2, 5.3.2, 6.3.2	RS

3.2 EMC Requirements Applicability

Table II shows the applicability of GEVS traceable EMC requirements at various levels of assembly and the specific requirement paragraph in the EMC Control Plan.

Table II. EMC Requirements Applicability

Test	EMCCP Top Level Para.#	Level of Assembly				
		Note	S/C	EM	Comp.(6)	INST
Conducted Emission Tests						
DC Power Leads	5.2, 6.2				X	X
Spikes DC Pwr	5.2		X	1	X	X
Antenna Terminals	5.13, 6.13				X	X
Power Quality Ripple and Noise	4.2	2	X	1		
Radiated Emission Tests						
DC Magnetic Fld/Properties Sys	4.1, 4.7	4	X	1		
DC Magnetic Fld/Prop. Comp.	5.7, 6.7			1	X	X
AC Magnetic Field System	4.1		X	1		
AC Magnetic Field Component	5.1, 6.1			1	X	X
Electric Fields System	4.1		X	1		
Electric Fields Component	5.1, 6.1			1	X	X
Antenna Port Emission S/C	6.13	5	X		X	
Conducted Susceptibility Tests						
Power Line	4.4, 5.4, 6.4				X	X
Intermodulation Products	6.13				X	
Signal Rejection	6.13				X	
Cross Modulation	6.13				X	
Power Line Transients	4.4, 5.4, 6.4				X	X
Radiated Susceptibility Tests						
Electric Fields and General EMC	4.3, 5.3, 6.3	3, 4	X		X	X
EMC with Spacecraft Tx	4.3, 5.3, 6.3	3, 4 3, 4	X X		X X	X X
Unintentional Electric Field	4.3, 5.3, 6.3		X		X	X
Magnetic Field Suscep.	4.3, 5.3, 6.3	2	X		X	X

S/C = Spacecraft Level **EM = Equipment Module** **Tx = Transmitters**
Comp = Component Level **INST = Instrument**

Notes 1 Test not required. Tests may be performed on a case–by–case basis for risk reduction.
2 Performed at system and subsystem level only
3 Definition of susceptibility defined in individual test plan per paragraph 4.3
4 System level requirement met by analysis and comparison of system and lower level of assembly test data
5 System level test performed as part of radiated EMC with Spacecraft Transmitters
6 These are the design requirements. Delineation of Qualification and Acceptance Test requirements vs level of assembly is specified in Tables IV and V.

3.2.1 EMC Requirements List

Table III summarizes all of the requirements contained in this EMC Control Plan.

3.2.2 EMC Requirements Matrix

Table IV tabulates the requirements contained in this EMC Control Plan (Table III) vs the EOS–AM equipment list.

3.3 EMC Requirements for the Launch Environment

3.3.1 Interface EMC Requirements

The Spacecraft and its components which are active during the launch phase shall comply with the requirements in GSFC–420–05–02. The applicable Spacecraft operational or vulnerable elements will meet the requirements of WSMCR 127–1 Vol. 1, WSMCR 160–1, JSC–07636 revision A, and ICD103 IS20008503.

3.3.2 Launch Phase Lightning Threat

The Spacecraft Pyrotechnic circuits shall not exhibit initiation, upset, performance degradation, or failure when subjected to a lightning threat with the characteristics of Figure 3. The figure is derived from the Space Shuttle Lightning Protection Criteria Document (JSC–07636) for shuttle launched Space Station items. Lightning threat analysis shall be based upon JSC–07636.

3.4 EMC Testing

Except where specified all EMI tests shall be performed per the EOS–AM EMC Test Plan PN20005868. Qualification testing shall be performed per Table V. The instruments shall use PN20005868 as guidance in preparing their EMC test plans.

The hierarchy of applicable test documents shall be, in descending order, the EOS–AM EMC Test Plan, GEVS–SE, and MIL–STD–461/462.

3.5 General Requirement, Electromagnetic Compatibility

The EOS–AM Spacecraft shall be self–compatible, compatible with its intended electromagnetic environment. and meet its EMC requirements.

Table III. EMC Requirements List

EMC Requirement	EMC Requirement Description
CE Ripple-Primary Power	System Test for Power subsystem / Integrated Spacecraft. Para. 4.2
CE Ripple-Secondary Pwr	Box test for EPC powered 28V components Para. 6.2.2
CE01 & CE03	Spacecraft Components Para 6.2. Instrument interfaces Para. 5.2
CE Common Mode	Spacecraft Components Para 6.2. Instrument interfaces Para. 5.2
CE06	Spacecraft Components Para 6.13.
RE02 System	System Requirement Para. 4.1
RE02 Instrument/ S/C Equipt.	Instrument interfaces Para. 5.1. Spacecraft Components Para 6.1
RE04 System	System Requirement Para. 4.1
RE04 Instrument/ S/C Equipt.	Instrument interfaces Para. 5.1. Spacecraft Components Para 6.1
CS01,CS02 & CS06 System	System Requirement Para. 4.4
CS01 &CS02 Inst./ S/C Equipt.	Instrument interfaces Para. 5.4. Spacecraft Components Para 6.4
CS06-Survive,Operate &	
Perform. Inst./ S/C Equipt.	Instrument interfaces Para. 5.4. Spacecraft Components Para 6.4
CS03, CS04, CS05, Antenna Port	Spacecraft Components Para 6.14.
RS01 Instrument/ S/C Equipt.	Instruments Para. 5.3.2. Spacecraft Components Para 6.3.2
RS03 Perform	System Para. 4.3.1, Ext. Components Para 6.3.1, Instruments Para. 5.3.1.
RS03 On-Orbit	System Para. 4.3.3. Instruments Para. 5.3.3.
RS03 Launch	System Para. 4.3.1, Ext. Components Para 6.3.1, Instruments Para. 5.3.1.
RS03 S/C Internal Equipment	Internally mounted Spacecraft Components Para 6.3.1
RS03 S/C External Equipment	Externally mounted Spacecraft Components Para 6.3.1
Magnetic Properties	Instruments Para. 5.7. Spacecraft Components Para 6.7.
DC Magnetic Env.	Instruments Para. 5.3.2. Spacecraft Components Para 6.3.2.
EMI Safety Margin/Superposition	Spacecraft & Components Para. 4.8/4.9 & 6.8/6.9. Instr. Para. 5.8/5.9.
Bonding Spacecraft System	System Requirement Para. 4.10
Bonding Equipment / Instruments	Spacecraft Components Para 4.10 & 6.10. Instrument Para. 5.10.
Connector and Shield Bonding	Spacecraft & Components Para 4.10.1 & 6.10.1. Instrument Para. 5.10.1
Grounding, References & Isolation	Spacecraft & Components Para 4.11. & 6.11 Instrument Para. 5.11.
Signal Reference Plane Grounding	Spacecraft & Components Para 4.11.1 & 6.11.1. Instrument Para. 5.11.1
Structure Grounding	Spacecraft & Components Para 4.11.1 & 6.11.1. Instrument Para. 5.11.1
Prime Power Grounding at PPR	Spacecraft & Components Para 4.11.1 & 6.11.1. Instrument Para. 5.11.1
Prime Power wiring isolation from Chassis	Spacecraft & Components Para 4.11.1 & 6.11.1. Instrument Para. 5.11.1
Chassis Bonding to SRP	Spacecraft & Components Para 4.11.1 & 6.11.1. Instrument Para. 5.11.1
Kinematic Mount Isolation	Spacecraft & Components Para 4.11.2 & 6.11.2. Instrument Para. 5.11.2
Thermal Blanket Grounding	Spacecraft & Components Para 4.11.3 & 6.11.3. Instrument Para. 5.11.3
Secondary Power Referencing	Spacecraft & Components Para 4.11.4 & 6.11.4. Instrument Para. 5.11.4
Signal Interfaces Grounding,	
References & Isolation	Spacecraft & Components Para 4.11.5 & 6.11.5. Instrument Para. 5.11.5.
Dedicated Returns	Spacecraft & Components Para 4.11.5 & 6.11.5. Instrument Para. 5.11.5.
Signal Interfaces Grounding.	Spacecraft & Components Para 4.11.5 & 6.11.5. Instrument Para. 5.11.5.
References & Isolation	Spacecraft & Components Para 4.11.5 & 6.11.5. Instrument Para. 5.11.5.
EED Isolation	Spacecraft & Components Para 4.10.5 & 6.10.5
Differential Drivers	Spacecraft & Components Para 4.11.5 & 6.11.5. Instrument Para. 5.11.5.
Fault Wire Grounding	Spacecraft & Components Para 4.11.6 & 6.11.6. Instrument Para. 5.11.6
Wiring Design	S/C Para 4.12, 4.11.5, 6.11.5 & 6.12. Instrument Para. 5.11.5 and 5.12

Table IV. EMC Requirements Matrix

EMC Requirement	Spacecraft	Equipment Modules						EPS
		COMM	Prop	GN&C	RWA-EM	Recorder	DAS Panel	EPEM
CE Ripple-Primary Power	System							Test+
CE Ripple-Secondary Pwr								
CE01 & CE03								
CE Common Mode								
CE06								
RE02 System	Test							Note 1
RE02 Instrument, S/C Equipt.								
RE04 System	Test							
RE04 Instrument, S/C Equipt.								Note 1
CS01,CS02 & CS06 System	Anal							
CS01 &CS02 Inst, S/C Equipt.								
CS06- Instrument, S/C Equipt.	Anal							
CS06 applicable limit(s) =								
CS03, CS04, CS05, Ant Port								
RS01 Instrument, S/C Equipt.								
RS03 Perform								
RS03 On-Orbit								
RS03 Launch								
RS03 S/C Internal Equip.								
RS03 S/C External Equip.		Anal	Anal	Anal	Anal	Anal	Anal	Anal
DC Magnetic Env.								
Magnetic Properties								
EMI Safety Margin,Superpos.	Anal							
Bonding Spacecraft System	I&T	Ins/Tst	Ins/Tst	Ins/Tst	Ins/Tst	Ins/Tst	Ins/Tst	Ins/Tst
Bonding Equip. ; Instruments	I&T	I&T	I&T	I&T	I&T	I&T	I&T	I&T
Conn. and Shield Bonding		Test+	Test+	Test+	Test+	Test+	Test+	I&T
Grounding, Ref. & Isol.		Inspct	Inspct	Inspct	Inspct	Inspct	Inspct	Inspct
SRP Grounding	I&T							I&T
Structure Grounding	I&T	I&T	I&T	I&T	I&T	I&T	I&T	I&T
Prime Power Grounding at PPR	I&T	I&T	I&T	I&T	I&T	I&T	I&T	I&T
Prime Pwr wiring Isol. from Chassis	I&T	Test+	Test+	Test+	Test+	Test+	Test+	I&T
Chassis Bonding to SRP	I&T	I&T	I&T	I&T	I&T	I&T	I&T	I&T
Kinematic Mount Isolation	I&T							
Thermal Blanket Grounding	I&T	I&T	I&T	I&T	I&T	I&T	I&T	
Secondary Pwr Ref.		Test+	Test+	Test+	Test+	Test+	Test+	Ins/Tst
Signal Interfaces Grounding,		Ins/Tst	Ins/Tst	Ins/Tst	Ins/Tst	Ins/Tst	Ins/Tst	Ins/Tst
References & Isolation								
Dedicated Returns		Inspct	Inspct	Inspct	Inspct	Inspct	Inspct	Inspct
Signal Interfaces Grounding,		Ins/Tst	Ins/Tst	Ins/Tst	Ins/Tst	Ins/Tst	Ins/Tst	Ins/Tst
References & Isolation		Ins/Tst	Ins/Tst	Ins/Tst	Ins/Tst	Ins/Tst	Ins/Tst	Ins/Tst
EED Isolation	I&T							
Differential Drivers		Inspct	Inspct	Inspct	Inspct	Inspct	Inspct	Inspct
Fault Wire Grounding	I&T	Test+	Test+	Test+	Test+	Test+	Test+	I&T
Wiring Design	Inspct	Inspct	Inspct	Inspct	Inspct	Inspct	Inspct	Inspct

Abbreviations: System = Spacecraft with Instruments; COMM = Communication / C&DH Equipment Module;
Prop = Propulsion Module; DAS Panel = Direct Access System Equipment Panel;
GN&C = Guidance Navigation and Control; RWA-EM = Reaction Wheel Assembly Equipment Module;
Recorder = Recorder Equipment Module; EPEM = Electrical Power Equipment Module;
Test =Qualification Test; Test+ =Qualification &Accept. Tests; S,O,P=Unit under test shall Survive, Operate, Perform;
I&T= Inspect or test at I&T; Inspct= Inspect; Anal=Analysis;
Ins/Tst = Inspect or test as applicable; P.Pwr =Prime Power; Note 1= EPS equipments are tested together. Tests at the Equipment Module level are not required but may be performed for risk reduction.

Table IV. EMC Requirements Matrix (Continued)

EMC Requirement	Electrical Power Subsystem							
	BPC	PDU	BATAs	SAD	FDB	EPC	ADE	SSU/SAA
CE Ripple-Primary Power	Test+; Note 1							Test+
CE Ripple-Secondary Pwr								
CE01 & CE03						Test+	Test+	Test+
CE Common Mode						Test+	Test+	Test+
CE06								
RE02 System								
RE02 Instrument/ S/C Equipt.	Test+; Note 1			Note 1		Test+	Test+	Note 3
RE04 System				Test+				
RE04 Instrument/ S/C Equipt.	Test+; Note 1			Test+		Test+	Test+	Test+
CS01,CS02 & CS06 System	Test /Analy per EMC Test Plan			Anal				
CS01 &CS02 Inst./ S/C Equipt.	Test /Analy per EMC Test Plan					Test	Test	
CS06- Instrument, S/C Equipt.	Test /Analy per EMC Test Plan			Test	Test	Test	Test	
CS06 applicable limit(s) =	Test /Analy per EMC Test Plan			S,O	S	S,O	S,O	S,O
RS01 Instrument/ S/C Equipt.	P	P	P	P		P	P	P
RS03 Perform								
RS03 On-Orbit								
RS03 Launch			O	O				O
RS03 S/C Internal Equip.	P	P	P		P	P	P	
RS03 S/C External Equip.			P	P	P	P	P	P
DC Magnetic Env.	Test	Test	Test	Test		Test	Test	
Magnetic Properties	Test	Test	Test	Test	Test	Test	Test	
EMI Safety Margin/Superpos.	Anal	Anal	Anal	Anal	Anal	Anal	Anal	Anal
Bonding Spacecraft System	Ins/Tst	Ins/Tst	Ins/Tst	Ins/Tst	Ins/Tst	Ins/Tst	Ins/Tst	Ins/Tst
Bonding Equip. / Instruments	I&T	I&T	I&T	I&T	I&T	I&T	I&T	I&T
Conn. and Shield Bonding	Test+	Test+	Test+	Test+	Test+	Test+	Test+	Test+
Grounding, Ref. & Isol.	Inspct	Inspct	Inspct	Inspct	Inspct	Inspct	Inspct	Inspct
SRP Grounding								
Structure Grounding	I&T	I&T	I&T	I&T	I&T	I&T	I&T	I&T
Prime Power Grounding at PPR	Test+	Test+						
Prime Pwr wiring isol. from Chassis	Test+		Test+	Test+	Test+	Test+	Test+	Test+
Chassis Bonding to SRP	I&T	I&T	I&T	I&T	I&T	I&T	I&T	I&T
Kinematic Mount Isolation								
Thermal Blanket Grounding								
Secondary Pwr Ref.	Ins/Tst	Ins/Tst	Ins/Tst	Ins/Tst	Ins/Tst	Ins/Tst	Ins/Tst	Ins/Tst
Signal Interfaces Grounding,	Ins/Tst	Ins/Tst	Ins/Tst	Ins/Tst	Ins/Tst	Ins/Tst	Ins/Tst	Ins/Tst
References & Isolation								
Dedicated Returns	Inspct	Inspct	Inspct	Inspct	Inspct	Inspct	Inspct	Inspct
Signal Interfaces Grounding,	Ins/Tst	Ins/Tst	Ins/Tst	Ins/Tst		Ins/Tst	Ins/Tst	Ins/Tst
References & Isolation	Ins/Tst	Ins/Tst	Ins/Tst	Ins/Tst		Ins/Tst	Ins/Tst	Ins/Tst
EED Isolation								
Differential Drivers	Inspct	Inspct	Inspct	Inspct		Inspct	Inspct	Inspct
Fault Wire Grounding	Test+	Test+	Test+	Test+	Test+	Test+	Test+	Test+
Wiring Design	Inspct	Inspct	Inspct	Inspct	Inspct	Inspct	Inspct	Inspct

Abbreviations: System = Spacecraft with Instruments; EPS = Electrical Power Subsystem (No Solar Array)
BPC= Battery Power Controller; PDU= Power Distribution Unit; BATAs= Battery Assembly; FDB= Fuse Distribution Box; EPC= Electrical Power Converter; ADE= Solar Array Drive Electronics;
SAD = Solar Array Drive; SSU= Sequential Shunt Unit; SAA = Solar Array Assembly;
EPS allowed Emissions measured at the PDU; Test =Qualification Test; Test+ =Qualification &Accept. Tests;
S,O,P=Unit under test shall Survive, Operate, Perform; I&T= inspect or test at I&T;
Inspct= Inspect; Anal=Analysis; Ins/Tst = Inspect or test as applicable;
Note 1= EPS equipment are tested together; Note 3 = SSU tested with a SAA circuit for RE02

Table IV. EMC Requirements Matrix (Continued)

EMC Requirement	E-Accom	Thermal			Propulsion			GN&C	
	PRA	MLI	HCE	Htrs	PMEA	Thrstrs	PXdcr	MTR	RWA
CE Ripple-Primary Power									
CE Ripple-Secondary Pwr					Test+				
CE01 & CE03			Test+	w/ HCE	Test+				Test+
CE Common Mode			Test+	w/ HCE	Test+				Test+
CE06									
RE02 System						@Sys	@Sys		
RE02 Instrument/ S/C Equipt.	Test+		Test+	w/ HCE	Test+				Test+
RE04 System	Test								
RE04 Instrument/ S/C Equipt.			Test	w/ HCE	Test	@Sys	@Sys	Meas.	Test+
CS01,CS02 & CS06 System									
CS01 &CS02 Inst./ S/C Equipt.	Test+		Test	Test, w/EPC			Test		Test
CS06- Instrument, S/C Equipt.	Test+		Test	Test, w/EPC			Test		Test
CS06 applicable limit(s) =	S,O		S,O		S,O				S,O
CS03, CS04, CS05, Ant Port									
RS01 Instrument/ S/C Equipt.	P		P	w/ HCE	P	P	P	P,w/ACE	P
RS03 Perform									
RS03 On-Orbit									
RS03 Launch	P		O		P	P	P	O,w/ACE	
RS03 S/C Internal Equip.			P	w/ HCE					P
RS03 S/C External Equip.	Test+		P	w/ HCE	Test	P	P	P,w/ACE	
DC Magnetic Env.			Test	w/ HCE	Test				Test
Magnetic Properties			Test	w/ HCE	Test				Test
EMI Safety Margin/Superpos.	Anal	Anal	Anal	Anal	Anal	Anal	Anal	Anal	Anal
Bonding Spacecraft System	Ins/Tst	Ins/Tst	Ins/Tst	Ins/Tst	Ins/Tst	Ins/Tst	Ins/Tst	Ins/Tst	Ins/Tst
Bonding Equip. / Instruments	I&T		I&T	I&T	I&T	I&T	I&T	I&T	I&T
Conn. and Shield Bonding	Test+		Test+	Inspct	Test+	Test+	Test+	Test+	Test+
Grounding, Ref. & Isol.	Inspct	Inspct	Inspct	Inspct	Inspct	Inspct	Inspct	Inspct	Inspct
SRP Grounding									
Structure Grounding		Test/I&T		I&T	I&T				
Prime Power Grounding at PPR			I&T	I&T	I&T		I&T	I&T	I&T
Prime Pwr wiring isol. from Chassis	I&T		Test+	Test+	Test+		Test+	Test+	Test+
Chassis Bonding to SRP	I&T		I&T	I&T	I&T	I&T	I&T	I&T	I&T
Kinematic Mount Isolation									
Thermal Blanket Grounding		I&T							
Secondary Pwr Ref.			I&T	I&T	I&T		I&T	I&T	I&T
Signal Interfaces Grounding,			Ins/Tst		Ins/Tst		Ins/Tst		Ins/Tst
References & Isolation	Test								
Dedicated Returns	Inspct		Inspct	Inspct	Inspct	Inspct	Inspct	Inspct	Inspct
Signal Interfaces Grounding,			Ins/Tst		Ins/Tst	Ins/Tst	Ins/Tst	Ins/Tst	Ins/Tst
References & Isolation			Ins/Tst		Ins/Tst	Ins/Tst	Ins/Tst	Ins/Tst	Ins/Tst
EED Isolation	Test+								
Differential Drivers	Inspct		Inspct		Inspct	Inspct	Inspct	Inspct	Inspct
Fault Wire Grounding	Test+	Test+	Test+	Test+	Test+	Test+	Test+	Test+	Test+
Wiring Design	Inspct		Inspct	Inspct	Inspct	Inspct	Inspct	Inspct	Inspct

Abbreviations: Elect Accom - Electrical Accommodations Equip. ; PRA - Pyro Relay Assy; hgaDE - High Gain Antenna Deployment Electronics, MTR -Magnetic Torque Rods; RWA-Reaction Wheel Assy; Thermal - Thermal Equipment - MLI -Multilayer Insulation; HCE - Heater Control Electronics; Htrs=Heater Elements; Propulsion = Propulsion Equipment; PMEA = Propulsion Module Electronics Avionics; Thrstrs - Thrusters; PXdcr= Pressure Transducer; Test=Qualification Test; Test+ =Qualification & Acceptance Tests; S,O,P = Unit under test shall Survive, Operate, Perform; I&T=Inspect or test at I&T; Inspct= Inspect; Anal=Analysis; Ins/Tst = Inspect or test as applicable; P.Pwr =Prime Power

Table IV. EMC Requirements Matrix (Continued)

EMC Requirement	GN&C								
	FSS	ESA	ESE	CSS	TAMag	IRU	ACE	PSU	Star T
CE Ripple-Primary Power									
CE Ripple-Secondary Pwr									
CE01 & CE03	Test+	Test+	Test+		Test+	Test+	Test+	Test+	Test+
CE Common Mode	Test+	Test+	Test+		Test+	Test+	Test+	Test+	Test+
CE06									
RE02 System									
RE02 Instrument/ S/C Equipt.	Test+	Test+	Test+	Test+	Test+	Test+	Test+	Test+	Test+
RE04 System									
RE04 Instrument/ S/C Equipt.	Test+	Test+	Test+	Test+	Test+	Test+	Test+	Test+	Test+
CS01,CS02 & CS06 System									
CS01 &CS02 Inst./ S/C Equipt.	T,w/PSU	T,w/PSU	T,w/PSU	T,w/ACE	T,w/ACE	T,w/PSU	Test	Test	T,w/PSU
CS06- Instrument, S/C Equipt.	T,w/PSU	T,w/PSU	T,w/PSU	T,w/ACE	T,w/ACE	T,w/PSU	Test	Test	T,w/PSU
CS06 applicable limit(s) =	S,O	S,O	S,O		S,O	S,O	S,O	S,O	S,O
CS03, CS04, CS05, Ant Port									
RS01 Instrument/ S/C Equipt.	P	P	P	P	P	P	P	P	P
RS03 Perform									
RS03 On-Orbit									
RS03 Launch	S	S	S	S					S,ext. face
RS03 S/C Internal Equip.					P	P	P	P	P
RS03 S/C External Equip.	P	P	P	P					P,ext. face
DC Magnetic Env.	Test	Test	Test	Test	Test	Test	Test	Test	Test
Magnetic Properties	Test	Test	Test	Test	Test	Test	Test	Test	Test
EMI Safety Margin/Superpos.	Anal	Anal	Anal	Anal	Anal	Anal	Anal	Anal	Anal
Bonding Spacecraft System	Ins/Tst	Ins/Tst	Ins/Tst	Ins/Tst	Ins/Tst	Ins/Tst	Ins/Tst	Ins/Tst	Ins/Tst
Bonding Equip. / Instruments	I&T	I&T	I&T	I&T	I&T	I&T	I&T	I&T	I&T
Conn. and Shield Bonding	Test+	Test+	Test+	Test+	Test+	Test+	Test+	Test+	Test+
Grounding, Ref. & Isol.	Inspct	Inspct	Inspct	Inspct	Inspct	Inspct	Inspct	Inspct	Inspct
SRP Grounding									
Structure Grounding									
Prime Power Grounding at PPR	I&T	I&T	I&T		I&T	I&T	I&T	I&T	I&T
Prime Pwr wiring isol. from Chassis	Test+	Test+	Test+		Test+	Test+	Test+	Test+	Test+
Chassis Bonding to SRP	I&T	I&T	I&T	I&T	I&T	I&T	I&T	I&T	I&T
Kinematic Mount Isolation									
Thermal Blanket Grounding									
Secondary Pwr Ref.	I&T	I&T	I&T	I&T	I&T	I&T	I&T	I&T	I&T
Signal Interfaces Grounding,	Ins/Tst	Ins/Tst	Ins/Tst	Ins/Tst	Ins/Tst	Ins/Tst	Ins/Tst	Ins/Tst	Ins/Tst
References & Isolation									
Dedicated Returns	Inspct	Inspct	Inspct	Inspct	Inspct	Inspct	Inspct	Inspct	Inspct
Signal Interfaces Grounding,	Ins/Tst	Ins/Tst	Ins/Tst	Ins/Tst	Ins/Tst	Ins/Tst	Ins/Tst	Ins/Tst	Ins/Tst
References & Isolation	Ins/Tst	Ins/Tst	Ins/Tst	Ins/Tst	Ins/Tst	Ins/Tst	Ins/Tst	Ins/Tst	Ins/Tst
EED Isolation									
Differential Drivers	Inspct	Inspct	Inspct	Inspct	Inspct	Inspct	Inspct	Inspct	Inspct
Fault Wire Grounding		Test+	Test+	Test+	Test+	Test+	Test+	Test+	Test+
Wiring Design	Inspct	Inspct	Inspct	Inspct	Inspct	Inspct	Inspct	Inspct	Inspct

Abbreviations: Sensor Assembly; FSS=Fine Sun Sensor; CSS=Coarse Sun Sensor; TAMag=3 Axis Magnetometer; IRU = Interial Reference Unit; ACE = Attitude Control Electronics; Star T = Star Tracker; C&DH = Command and Data Handling Equip.; ESA = Earth Sensor Assembly; ESE = Earth Sensor Electronics; PSU= Power Switching Unit;

T, Test =Qualification Test; T+, Test+ =Qualification & Acceptance. Tests;

S,O,P = Unit under test shall Survive, Operate, Perform;

I&T=Inspect or test at I&T; Inspct= Inspect; Anal=Analysis; Ins/Tst = Inspect or test as applicable; P.Pwr =Prime Power

Table IV. EMC Requirements Matrix (Continued)

EMC Requirement	C&DH					
	SCC	CTIU	BDUs	SFE	SSR	
CE Ripple-Primary Power						
CE Ripple-Secondary Pwr						
CE01 & CE03	Test+	Test+	Test+	Test+	Test+	
CE Common Mode	Test+	Test+	Test+	Test+	Test+	
CE06						
RE02 System						
RE02 Instrument/ S/C Equipt.	Test+	Test+	Test+	Test+	Test+	
RE04 System						
RE04 Instrument/ S/C Equipt.	Test+	Test+	Test+	Test+	Test+	
CS01,CS02 & CS06 System						
CS01 &CS02 Inst./ S/C Equipt.	Test	Test	Test	Test	Test	
CS06- Instrument, S/C Equipt.	Test	Test	Test	Test	Test	
CS06 applicable limit(s) =	S,O	S,O	S,O	S,O	S,O	
CS03, CS04, CS05, Ant Port						
RS01 Instrument/ S/C Equipt.	P	P	P	P	P	
RS03 Perform						
RS03 On-Orbit						
RS03 Launch			P			
RS03 S/C Internal Equip.	P	P	P	P	P	
RS03 S/C External Equip.			P			
DC Magnetic Env.	Test	Test	Test	Test	Test	
Magnetic Properties	Test	Test	Test	Test	Test	
EMI Safety Margin/Superpos.	Anal	Anal	Anal	Anal	Anal	
Bonding Spacecraft System	Ins/Tst	Ins/Tst	Ins/Tst	Ins/Tst	Ins/Tst	
Bonding Equip. / Instruments	I&T	I&T	I&T	I&T	I&T	
Conn. and Shield Bonding	Test+	Test+	Test+	Test+	Test+	
Grounding, Ref. & Isol.	Inspct	Inspct	Inspct	Inspct	Inspct	
SRP Grounding						
Structure Grounding						
Prime Power Grounding at PPR	I&T	I&T	I&T	I&T	I&T	
Prime Pwr wiring isol. from Chassis	Test+	Test+	Test+	Test+	Test+	
Chassis Bonding to SRP	I&T	I&T	I&T	I&T	I&T	
Kinematic Mount Isolation						
Thermal Blanket Grounding			I&T			
Secondary Pwr Ref.	Test+	Test+	Test+	Test+	Test+	
Signal Interfaces Grounding,	Ins/Tst	Ins/Tst	Ins/Tst	Ins/Tst	Ins/Tst	
References & Isolation						
Dedicated Returns	Inspct	Inspct	Inspct	Inspct	Inspct	
Signal Interfaces Grounding,	Ins/Tst	Ins/Tst	Ins/Tst	Ins/Tst	Ins/Tst	
References & Isolation	Ins/Tst	Ins/Tst	Ins/Tst	Ins/Tst	Ins/Tst	
EED Isolation						
Differential Drivers	Inspct	Inspct	Inspct	Inspct	Inspct	
Fault Wire Grounding	Test+	Test+	Test+	Test+	Test+	
Wiring Design	Inspct	Inspct	Inspct	Inspct	Inspct	

Abbreviations: Sensor Assembly; FSS=Fine Sun Sensor; CSS=Coarse Sun Sensor;
TAMag=3 Axis Magnetometer; IRU = Interial Reference Unit; ACE = Attitude Control Electronics;
Star T = Star Tracker; C&DH = Command and Data Handling Equip.; SCC = S/C Control Computer
CTIU = Command Telemetry Interface Unit; BDUs = Bus Data Units PSU= Power Switching Unit;
T, Test =Qualification Test; T+, Test+ =Qualification & Acceptance. Tests;
S,O,P = Unit under test shall Survive, Operate, Perform;
I&T= inspect or test at I&T; Inspct= Inspect; Anal=Analysis; P.Pwr =Prime Power
Ins/Tst = Inspect or test as applicable;

Table IV. EMC Requirements Matrix (Continued)

EMC Requirement	Communications Equipment						
	SBT	SBIU	S-Filter	OMNI	HGA	MO	KSAM
CE Ripple-Primary Power							
CE Ripple-Secondary Pwr							
CE01 & CE03	Test+				Test+	Test+	Test+
CE Common Mode	Test+						
CE06	Test+ with SBIU & S-Filter				Test+	Test+	Test+
RE02 System							
RE02 Instrument/ S/C Equipt.	Test+	Test+	Tst/Anal		Test+	Test+	Test+
RE04 System							
RE04 Instrument/ S/C Equipt.	Test+	Test+	Tst/Anal		Test+	Test+	Test+
CS01,CS02 & CS06 System							
CS01 &CS02 Inst./ S/C Equipt.	Test				Test	Test	Test
CS06- Instrument, S/C Equipt.	Test				Test	Test	Test
CS06 applicable limit(s) =	S,O				S,O	S,O	S,O
CS03, CS04, CS05, Ant Port	Test+ with SBIU & S-Filter				Test		Test
RS01 Instrument/ S/C Equipt.	P	P	P		P	P	P
RS03 Perform							
RS03 On-Orbit							
RS03 Launch	S; Test or analysis of S-Band system.				S		
RS03 S/C Internal Equip.	P	P	Test w/ S-Band sys.			P	P
RS03 S/C External Equip.				O	P		
DC Magnetic Env.	Test	Test		Test	Test	Test	Test
Magnetic Properties	Test	Test		Test	Test	Test	Test
EMI Safety Margin/Superpos.	Anal	Anal	Anal	Anal	Anal	Anal	Anal
Bonding Spacecraft System	Ins/Tst	Ins/Tst	Ins/Tst	Ins/Tst	Ins/Tst	Ins/Tst	Ins/Tst
Bonding Equip. / Instruments	I&T	I&T	I&T	I&T	I&T	I&T	I&T
Conn. and Shield Bonding	Test+	Test+	Test+	Test+	Test+	Test+	Test+
Grounding, Ref. & Isol.	Inspct	Inspct	Inspct	Inspct	Inspct	Inspct	Inspct
SRP Grounding							
Structure Grounding							
Prime Power Grounding at PPR	I&T				I&T	I&T	I&T
Prime Pwr wiring isol. from Chassis	Test+				Test+	Test+	Test+
Chassis Bonding to SRP	I&T	I&T	I&T	I&T	I&T	I&T	I&T
Kinematic Mount Isolation							
Thermal Blanket Grounding				I&T	I&T		
Secondary Pwr Ref.	Test+	Test+			Test+	Test+	Test+
Signal Interfaces Grounding,	Ins/Tst	Ins/Tst	Ins/Tst	Ins/Tst	Ins/Tst	Ins/Tst	Ins/Tst
References & Isolation							
Dedicated Returns	Inspct	Inspct	Inspct	Inspct	Inspct	Inspct	Inspct
Signal Interfaces Grounding,	Ins/Tst	Ins/Tst	Ins/Tst	Ins/Tst	Ins/Tst	Ins/Tst	Ins/Tst
References & Isolation	Ins/Tst	Ins/Tst	Ins/Tst		Ins/Tst	Ins/Tst	Ins/Tst
EED Isolation							
Differential Drivers	Inspct	Inspct			Inspct	Inspct	Inspct
Fault Wire Grounding	Test+	Test+			Test+	Test+	Test+
Wiring Design	Inspct	Inspct	Inspct	Inspct	Inspct	Inspct	Inspct

Abbreviations: C&DH= Command and Data Handling Equipment; PMux= Phase Muliplexer;
SSR = Solid State Recorder; SBT= S band Transponder; OMNI= Omni S Band Ant.; S-Filter= S Band filter
MO= Master Oscillator; SFE= Science Formatting Equip.; HGA= High Gain Ant. Assembly;
KSAM = Ku Single Access Modulator; FRoutr = Frame Router; SBIU = S Band Interface Unit;
Test =Qualification Test; Test+ =Qualification & Acceptance. Tests; S,O,P = Unit under test shall
Survive, Operate, Perform; I&T=Inspect or test at I&T;
Ins/Tst = Inspect or test as applicable; P.Pwr =Prime Power

Table IV. EMC Requirements Matrix (Continued)

EMC Requirement	Communications Equipment						
	DAS Ant	DAS TX	UC	DASM	WG Sw	DAS Filter	
CE Ripple-Primary Power							
CE Ripple-Secondary Pwr							
CE01 & CE03		Test+	Test+	Test+			
CE Common Mode		Test+	Test+	Test+			
CE06	Test+; Test DAS components as subsystem						
RE02 System							
RE02 Instrument/ S/C Equipt.		Test+	Test+	Test+		Tst/Anal	
RE04 System							
RE04 Instrument/ S/C Equipt.		Test+	Test+	Test+		Tst/Anal	
CS01,CS02 & CS06 System							
CS01 &CS02 Inst./ S/C Equipt.		Test	Test	Test			
CS06- Instrument, S/C Equipt.		Test	Test	Test			
CS06 applicable limit(s) =		S,O	S,O	S,O			
CS03, CS04, CS05, Ant Port	A. Port Test+; Test DAS components as subsystem						
RS01 Instrument/ S/C Equipt.		P	P	P	P	P	
RS03 Perform							
RS03 On-Orbit							
RS03 Launch	S; Test; Test/analy. DAS components as subsystem						
RS03 S/C Internal Equip.							
RS03 S/C External Equip.		P	P	P	P	w/DAS Tx	
DC Magnetic Env.	Test	Test	Test	Test	Test	Test	
Magnetic Properties	Test	Test	Test	Test	Test	Test	
EMI Safety Margin/Superpos.	Anal	Anal	Anal	Anal	Anal	Anal	
Bonding Spacecraft System	Ins/Tst	Ins/Tst	Ins/Tst	Ins/Tst	Ins/Tst	Ins/Tst	
Bonding Equip. / Instruments	I&T	I&T	I&T	I&T	I&T	I&T	
Conn. and Shield Bonding	Test+	Test+	Test+	Test+	Test+	Test+	
Grounding, Ref. & Isol.	Inspct	Inspct	Inspct	Inspct	Inspct	Inspct	
SRP Grounding							
Structure Grounding							
Prime Power Grounding at PPR		I&T	I&T	I&T			
Prime Pwr wiring isol. from Chassis		Test+	Test+	Test+			
Chassis Bonding to SRP	I&T	I&T	I&T	I&T	I&T	I&T	
Kinematic Mount Isolation							
Thermal Blanket Grounding	I&T						
Secondary Pwr Ref.		Test+	Test+	Test+			
Signal Interfaces Grounding,	Ins/Tst	Ins/Tst	Ins/Tst	Ins/Tst	Ins/Tst	Ins/Tst	
References & Isolation							
Dedicated Returns	Inspct	Inspct	Ins/Tst	Inspct	Inspct		
Signal Interfaces Grounding,	Ins/Tst	Ins/Tst	Ins/Tst	Ins/Tst	Ins/Tst		
References & Isolation	Ins/Tst	Ins/Tst	Ins/Tst	Ins/Tst	Ins/Tst		
EED Isolation							
Differential Drivers		Inspct	Inspct	Inspct	Inspct		
Fault Wire Grounding		Test+	Inspct	Test+	Test+		
Wiring Design	Inspct	Inspct	Inspct	Inspct	Inspct	Inspct	
Abbreviations: DAS= Direct Access Service; DAS Ant= DAS Earth Coverage Ant;							
UC/FS= DAS Upconverter and Freq. Standard; DAS Filter=DAS RF Filter; Filter Assy;							
DAS TX= DAS Transmitter; DASM= DAS Modulator; WG Sw= DAS Wavguide Switch;							
Prop= Propulsion Module (tanks, Frame); Hskpg = GN&C, COM, C&DH Enclosures;							
RWA = Reaction Wheel Assy Enclosures; Test =Qualification Test;							
Test+ =Qualification & Acceptance. Tests; S,O,P = Unit under test shall Survive, Operate, Perform;							
Ins/Tst = Inspect or test as applicable; P.Pwr =Prime Power							

Table IV. EMC Requirements Matrix (Continued)

EMC Requirement	Instruments				ASTER					
	CERES	MOPITT	MODIS	MISR	TIR	SWIR	VNIR	VEL	CSP	MPS
CE Ripple-Primary Power										
CE Ripple-Secondary Pwr										
CE01 & CE03	Test+	Test+	Test+	Test+	Test Aster Prime Power as combined subsystem					Test+
CE Common Mode	Test+	Test+	Test+	Test+	Test Aster Prime Power as combined subsystem					Test+
CE06										
RE02 System										
RE02 Instrument/ S/C Equipt.	Test+	Test+	Test+	Test+	Test+	Test+	Test+	Test+	Test+	Test+
RE04 System										
RE04 Instrument/ S/C Equipt.	Test+	Test+	Test+	Test+	Test+	Test+	Test+	Test+	Test+	Test+
CS01,CS02 & CS06 System										
CS01 &CS02 Inst./ S/C Equipt.	Test+	Test+	Test+	Test+	Test Aster Prime Power as combined subsystem					Test+
CS06- Instrument, S/C Equipt.	Test+	Test+	Test+	Test+	Test Aster Prime Power as combined subsystem					Test+
CS06 applicable limit(s) =	S,O,P	S,O,P	S,O,P	S,O,P	Survive, Operate and Perform limits are applied to the MPS					
CS03, CS04, CS05, Ant Port										
RS01 Instrument/ S/C Equipt.	P	P	P	P	P	P	P	P	P	P
RS03 Perform	P	P	P	P	P	P	P	P	P	P
RS03 On-Orbit	O	O	O	O	O	O	O	O	O	O
RS03 Launch	S	S	S	S	S	S	S	S	S	S
RS03 S/C Internal Equip.										
RS03 S/C External Equip.										
DC Magnetic Env.	Test+	Test+	Test+	Test+	Test+	Test+	Test+	Test+	Test+	Test+
Magnetic Properties	Test+	Test+	Test+	Test+	Test+	Test+	Test+	Test+	Test+	Test+
EMI Safety Margin/Superpos.	Anal	Anal	Anal	Anal	Anal	Anal	Anal	Anal	Anal	Anal
Bonding Spacecraft System	Ins/Tst	Ins/Tst	Ins/Tst	Ins/Tst	Ins/Tst	Ins/Tst	Ins/Tst	Ins/Tst	Ins/Tst	Ins/Tst
Bonding Equip. / Instruments	I&T	I&T	I&T	I&T	I&T	I&T	I&T	I&T	I&T	I&T
Conn. and Shield Bonding	Test+	Test+	Test+	Test+	Test+	Test+	Test+	Test+	Test+	Test+
Grounding, Ref. & Isol.	Inspct	Inspct	Inspct	Inspct	Inspct	Inspct	Inspct	Inspct	Inspct	Inspct
SRP Grounding										
Structure Grounding										
Prime Power Grounding at PPR	I&T	I&T	I&T	I&T	I&T	I&T	I&T	I&T	I&T	I&T
Prime Pwr wiring isol. from Chassis	Test+	Test+	Test+	Test+	Test+	Test+	Test+	Test+	Test+	Test+
Chassis Bonding to SRP	Inspct	Inspct	Inspct	Inspct	Inspct	Inspct	Inspct	Inspct	Inspct	Inspct
Kinematic Mount Isolation	I&T	I&T	I&T	I&T	I&T	I&T	I&T	I&T	I&T	I&T
Thermal Blanket Grounding	I&T	I&T	I&T	I&T	I&T	I&T	I&T	I&T	I&T	I&T
Secondary Pwr Ref.	I&T	I&T	I&T	I&T	I&T	I&T	I&T	I&T	I&T	I&T
Signal Interfaces Grounding,	Ins/Tst	Ins/Tst	Ins/Tst	Ins/Tst	Ins/Tst	Ins/Tst	Ins/Tst	Ins/Tst	Ins/Tst	Ins/Tst
References & Isolation										
Dedicated Returns	Inspct	Inspct	Inspct	Inspct	Inspct	Inspct	Inspct	Inspct	Inspct	Inspct
Signal Interfaces Grounding,	Ins/Tst	Ins/Tst	Ins/Tst	Ins/Tst	Ins/Tst	Ins/Tst	Ins/Tst	Ins/Tst	Ins/Tst	Ins/Tst
References & Isolation	Ins/Tst	Ins/Tst	Ins/Tst	Ins/Tst	Ins/Tst	Ins/Tst	Ins/Tst	Ins/Tst	Ins/Tst	Ins/Tst
EED Isolation										
Differential Drivers	Inspct	Inspct	Inspct	Inspct	Inspct	Inspct	Inspct	Inspct	Inspct	Inspct
Fault Wire Grounding	Test+	Test+	Test+	Test+	Test+	Test+	Test+	Test+	Test+	Test+
Wiring Design	Inspct	Inspct	Inspct	Inspct	Inspct	Inspct	Inspct	Inspct	Inspct	Inspct

Test = Qualification Test; Test+ = Qualification & Acceptance. Tests; S,O,P = Unit under test shall Survive, Operate, and Perform;
I&T= Inspect or test at I&T; Inspct= Inspect; Anal=Analysis ; P.Pwr =Prime Power
Ins/Tst = Inspect or test as applicable;

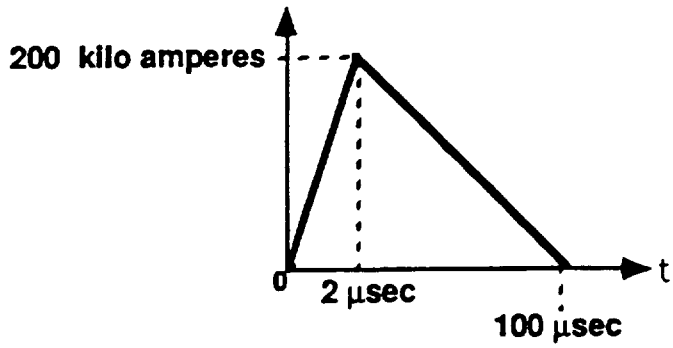

(a) Lightning current

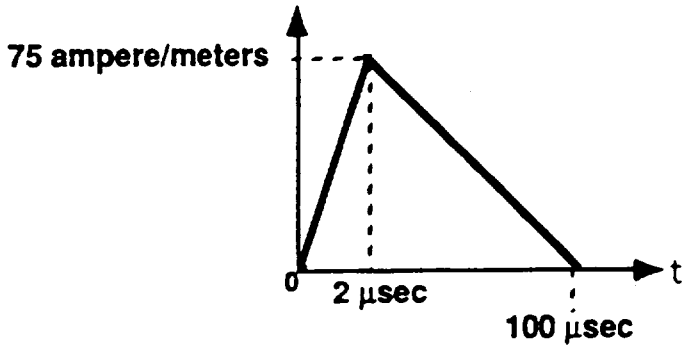

(b) Aperture coupled field, A-component

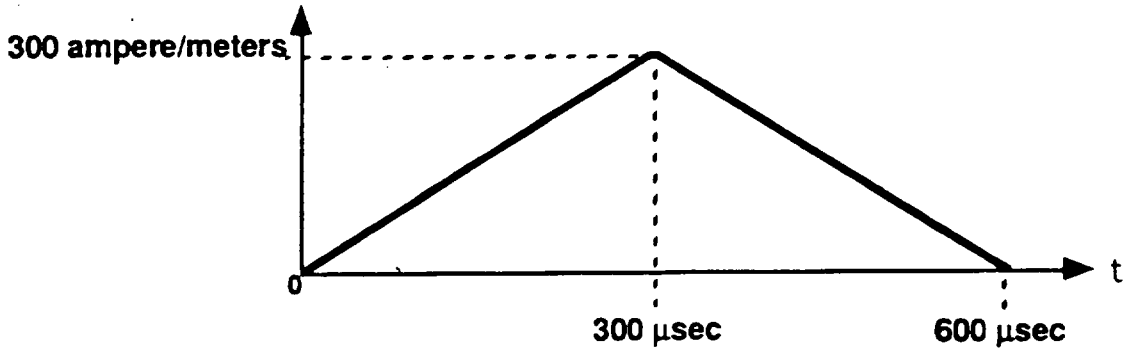

(c) Diffusion coupled field, B-component

Figure 3. Lightning Threat

Table V. EMC Qualification Testing

Subsystem	Component	A Group Test	B Group Test	System Test
Equipment Modules	PMAD/Battery	1		
	Comm/C&DH	1		
	GN&C/Sensor	1		
	Solid State Recorder	1		
	RWA	1		
Major Assemblies	HGA	X	X	
	SAD	X		
	Solar Array	X		
	Propulsion Module	X		
Thermal	Heaters and Controllers	X		X
	Temp. Sensors			X
	Pressure Transducers			X
	Heater Controllers	X		X
	Solenoid Valves			
C&DH	CTIU	X		
	SCC	X		
	BDU	X		
	SFE Equipment	X		
	IBDU	X		
Communications	S–Band Transponder	X	X	
	S–Band Omni Antenna			X
	S–Band Filter	X		
	SBIU	X		
	Master Oscillator			X
	Antenna Feeds	X	X	
	Ku–Band Electronics	X	X	
	HGA	X	X	
	Ku–Band Modulator	X	X	X
	DAS Equipment			
GN&C	IRU	X		
	ACE	X		
	Star Tracker	X		
	PSU	X		
	3–Axis Magnetometer	X		
	RWA	X		
	ESA	X		
	ESE	X		
	SSA	X		
	Magnetic Torque Rods	X		
	Accelerometer Unit	X		
Power	Solar Array			2
	Solar Array Drive	3		
	Array Drive Electronics	3		
	SA Deploy Elec.	3		
	Batteries			4
	BPC	3		
	PDU	3		
	EPC	X		
	SSU	3		
Harness				X

Group A – CS01/CS02,CS06, RE02,RE04,RS01, RS03, Mag Prop.; **Group B** – CS03,4,5
1 – Testing at equipment module level not required. Tests may be performed on a case–by–case basis for risk reduction.
2 – Solar Array SPA tested with EDM SSU to evaluate radiated performance objectives.
3 – Conducted emissions tests are tailored to meet system performance objectives.
4 – Batteries tested with BPC to determine compliance with radiated performance objectives.

4 SPACECRAFT SYSTEM EMC REQUIREMENTS

4.1 Radiated Emissions (RE02, RE04)

The Spacecraft shall not radiate unintentional broadband or narrowband electric fields in excess of the limits given in Figure 4.

The Spacecraft shall not radiate unintentional magnetic field emissions in excess of the limits specified in Figure 5 when measured at 1 meter.

4.2 Prime Power Quality, Ripple and Noise

The Spacecraft Prime power line conducted ripple and noise shall be limited to less than the levels in Figure 6 when measured at the power distribution unit (PDU). This requirement is to be verified by time domain measurements. Test measurement details will be described in separate test documents.

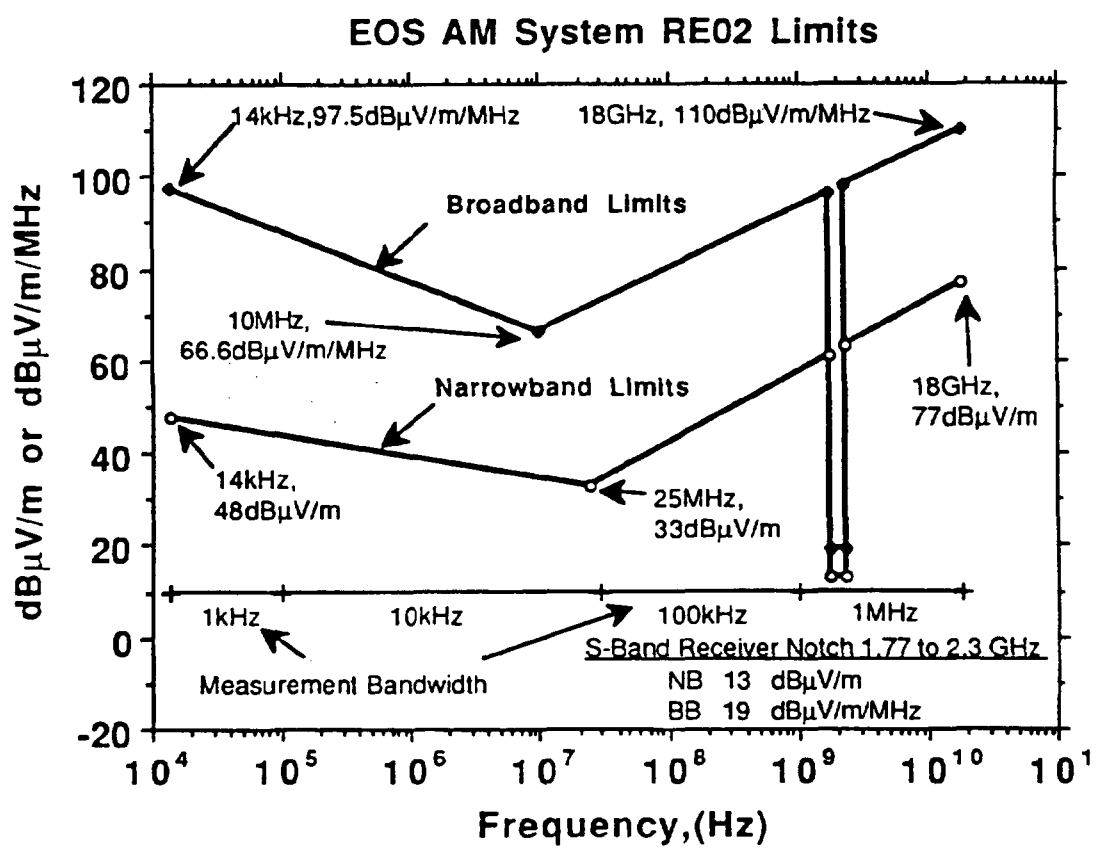

Figure 4. Spacecraft Radiated Electric Field Emissions Limits (RE02)

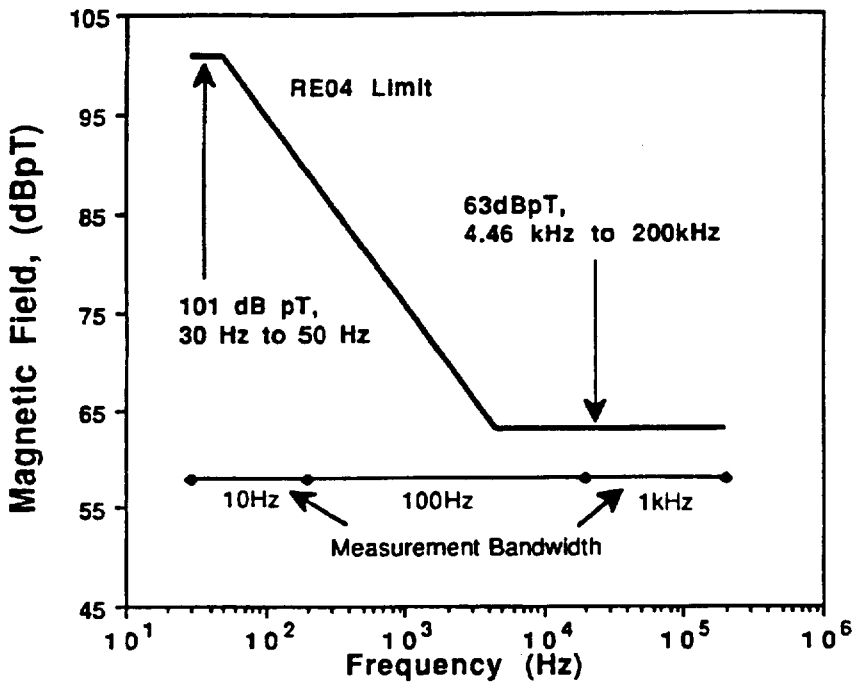

Figure 5. Spacecraft Radiated Magnetic Field Emissions Limit

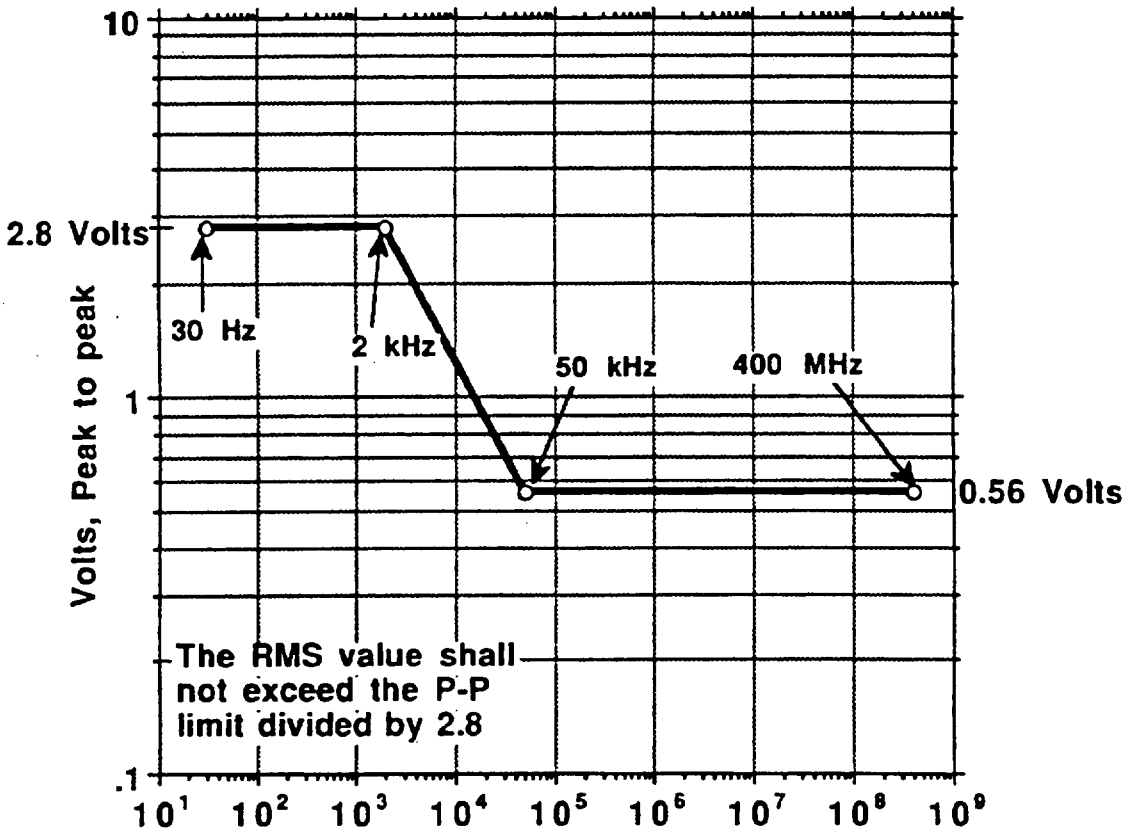

Figure 6. Spacecraft Prime Power Ripple Limits

4.3 Radiated Susceptibility and Definition of Susceptibility Criteria

The susceptibility criteria for the Spacecraft is divided into three performance categories. These categories are survive, operate and perform. The applicability of the applied Environmental levels for Spacecraft equipments is detailed in Section 6.

The susceptibility criteria for instruments is specified in Section 5.3. The susceptibility criteria for Spacecraft equipment is specified in Section 6.3.

Survival is defined as the ability to withstand the applied environment without any permanent loss of performance capability. Survival is required for both powered and unpowered states.

Operate is defined as the ability to execute all functions except to take scientific data accurately in the applied environment. Operate is the ability to withstand the applied environment without malfunction, loss of capability, change of operation state/mode, memory changes or need for outside intervention. Operate requires that the survival criteria be met.

Perform is the ability of the Spacecraft or Spacecraft equipment to meet its specified performance. Perform requires that the Operate criteria be met.

Table VI. Spacecraft Susceptibility Requirements

Test	Spacecraft Equipment		
	Survive	Operate	Perform(5)
RS03(1)	Y(6,4)	Y(6,4)	Y(6,4)
RS03(2)	Y	Y	Y
RS03(3)	Y	Y	Y
Magnetic Properties(7)	Y	Y	Y

Y = Applicable
N = Not Applicable
D = Degraded Sensitivity, Test Plan shall specify limits

(1) Composite of normal checkout, Atlas, Titan, and launch susceptibility levels (Figure 7)
(2) On–orbit susceptibility levels (Figure 10)
(3) Spacecraft generated susceptibility levels (Figure 8)
(4) By test or analysis
(5) Definition of susceptibility (i.e., criteria for performance) defined in test plan.
(6) Launch environment and launch environment reduced by equipment module shielding where applicable.
(7) Immunity to Spacecraft and Earth generated magnetic fields
(8) The CS06 Survive levels are **(TBR–1)**

4.3.1 Radiated Susceptibility, Electric Fields (RS03)

The Spacecraft shall meet the following criteria when subjected to the susceptibility environments specified below.

The Spacecraft systems which are necessary for launch shall perform when subjected to electric fields over the range of frequencies and at the levels specified in Figure 7. Figure 7 is the applied maximum level of the WSMC launch environment sources listed in Table VII and the launch–vehicle–generated environment.

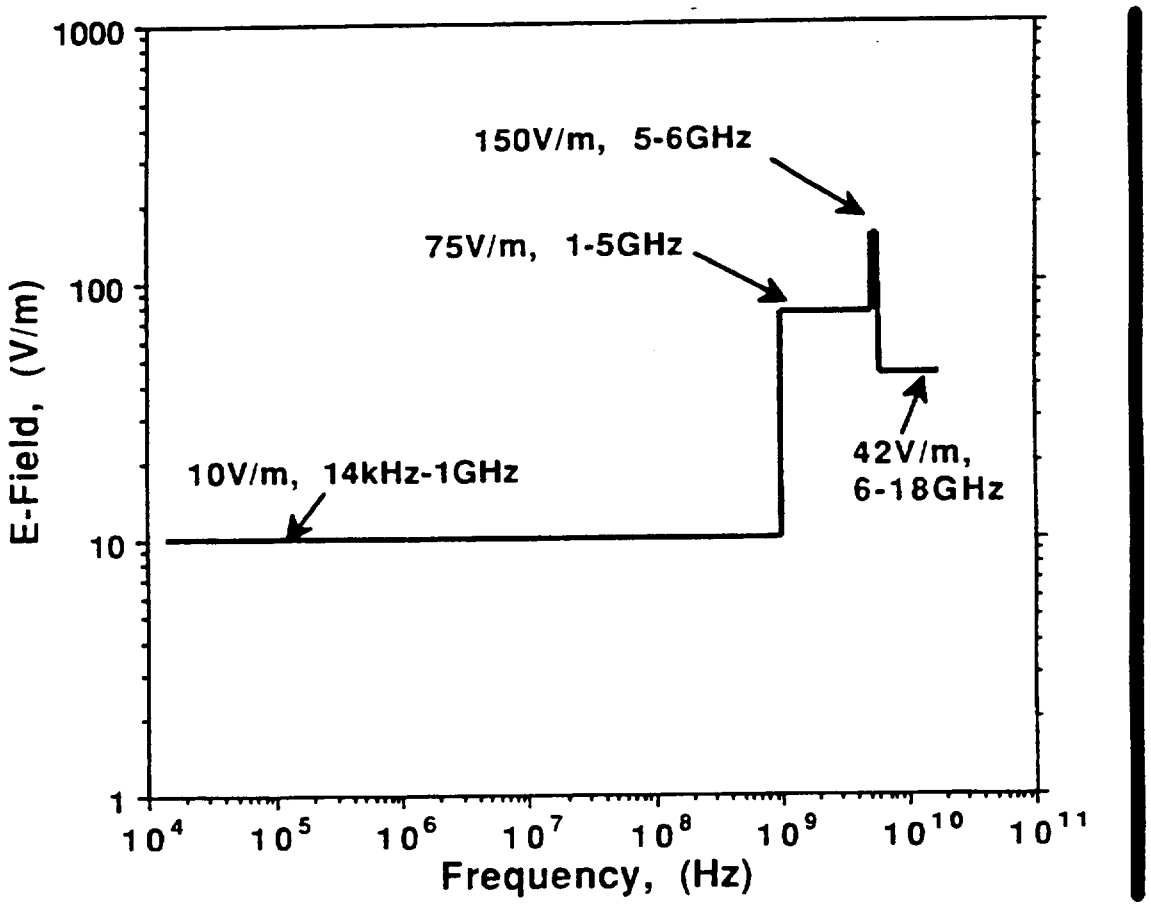

Figure 7. Launch Radiated Susceptibility, Electric Field (RS03)

Table VII. High–Level RF Sources for EOS–AM Spacecraft Launch

Equipment	Low – High Frequency (MHz)	Peak Power (W)	Avg. Power (W)	Ant. Gain (dB)	Theoretical E–Field Peak (V/m)	Measured E–Field Peak (V/m)	Avg. Intensity (V/m)	Modulation
Titan High Level RF Environment								
NUS S–band							17.28	
NUS C–band							22.50	
Atlas High Level RF Environment								
S–band Telemetry	2202.5 – 2206.5	12.0 x 2	5.0 x 2	3.40			21.20	FM
C–band Tracking	5765.0	700.0	1.0	3.40		142.80	3.198	Pulse

The Spacecraft systems shall survive when subjected to electric fields over the range of frequencies and at the levels specified in Figures 7 and 8. The peak transmitter level in Figure 8 for S–, X–, and Ku–bands are the worst–case applied maximum level of Spacecraft sources listed in Table VIII.

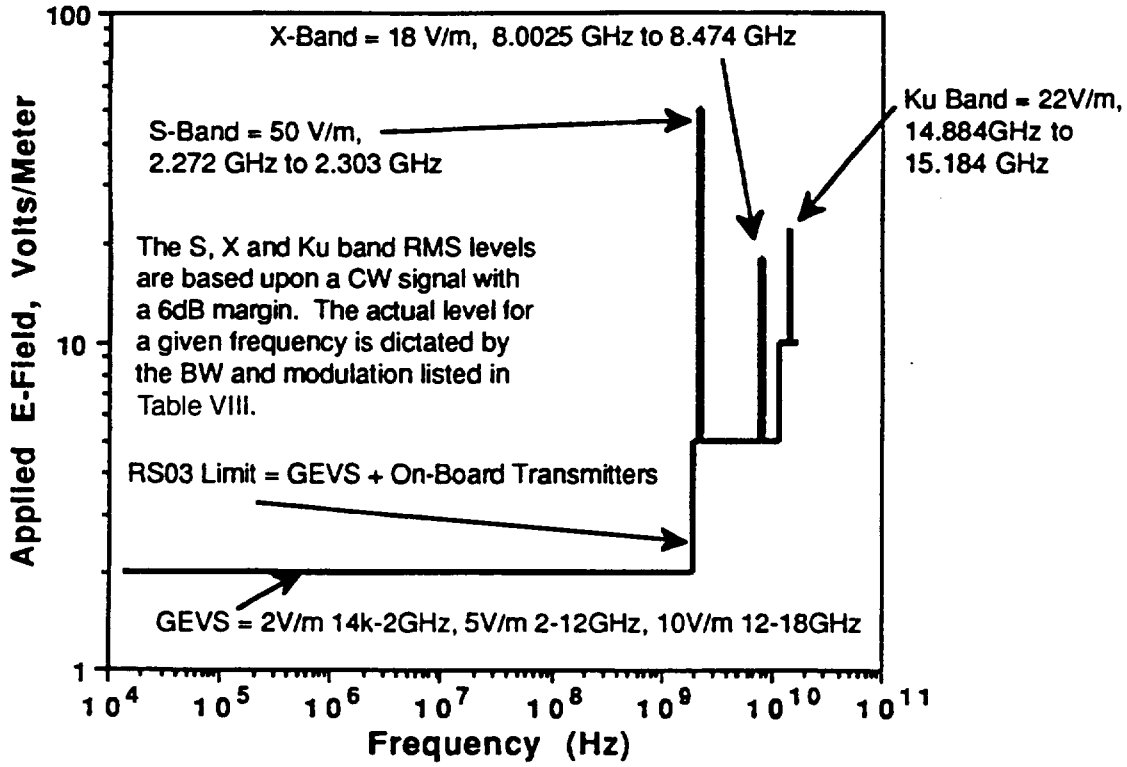

Figure 8. Spacecraft Generated Radiated Susceptibility, Electric Field (RS03)

Table VIII. Spacecraft–Generated EOS–AM RF Sources

Transmitter	Band	Center Frequency (GHz)	Modulation Type	Bandwidth (MHz)	Volts/m @ Inst (E_{peak})
HGA	Ku	15.0034	SQPSK	300(1)	22
HGA	S	2.2875	SQPN	6–15(1)	
OMNI–TDRSS	S	2.2875	SQPN	6–15(1)	50
DAS–DP	X	8.2125	SQPSK	300(1)	18
DAS–DB	X	8.2125	SQPSK	60(1)	18
DAS–DB/DDL	X	8.2125	SQPSK	420(1)	18
OMNI–GN	S	2.2875	PSK/PM	2.112(2)	50
–DSN	S	2.2875	PM	2.112	50
–WTS	S	2.2875	PM	2.112	50

(1) Width of main lobe of the transmitter spectrum (null to null).

(2) 16 kbps bi–phase data PSK modulated on a 1.024 MHz carrier which, in turn, is phase modulated on the RF carrier with Beta = 0.8 radian peak.

4.3.2 Radiated Susceptibility, Magnetic Fields (RS01)

The Spacecraft EEDs shall not be degraded after exposure to the lightning fields specified in paragraph 3.3.2. Equipment necessary for launch shall perform during exposure to the lightning fields specified in paragraph 3.3.2.

The Spacecraft equipment, components, and subsystems shall perform when subjected to the Spacecraft magnetic field requirement of Figure 9.

All Spacecraft equipment shall Perform in the magnetic fields shown in Figure 9. Figure 9 shows the estimate of worst case magnetic fields at various locations on the Spacecraft produced by the magnetic torque rods.

The Spacecraft equipment critical and necessary for launch shall perform during exposure to a 10 Gauss (1,000 μT) Static Magnetic field.

4.3.3 Radiated Susceptibility, Electric Field On–Orbit Environment (RS03)

The on–orbit electric field levels of Figure 10 and Table IX is the RS03 environment for the EOS orbit as reported by the Electromagnetic Compatibility Analysis Center (ECAC).

The Spacecraft shall perform when subjected to the on–orbit electric field levels of Figure 10 and Table IX.

4.4 Conducted Susceptibility (CS01, CS02, CS06)

Spacecraft–level conducted susceptibility will be verified by compiling the component level test data for CS01, CS02, and CS06 to ensure that the Spacecraft achieves Electromagnetic Interference Safety Margin (EMISM).

4.5 Not Used

4.6 Deployment EED Design

The Spacecraft design shall provide protection from premature deployment of electro–explosive devices (EEDs) in accordance with MIL–STD–1576.

4.7 Equipment Magnetic Properties

Spacecraft equipments static dipole moment shall not exceed 0.3 Am^2 initially and shall not exceed 0.3 Am^2 after torque rod activity. Torquer Rods shall be designed to limit residual static dipole moment to 5 Am^2.

4.8 Electromagnetic Interference Safety Margin

The Electromagnetic Interference Safety Margin (EMISM) for safety critical circuits (such as EEDs) shall be 20 dB, verified by analysis or test. EMISM for other EMC critical circuits shall be 6 dB, verified by comparison of emissions and susceptibility test data.

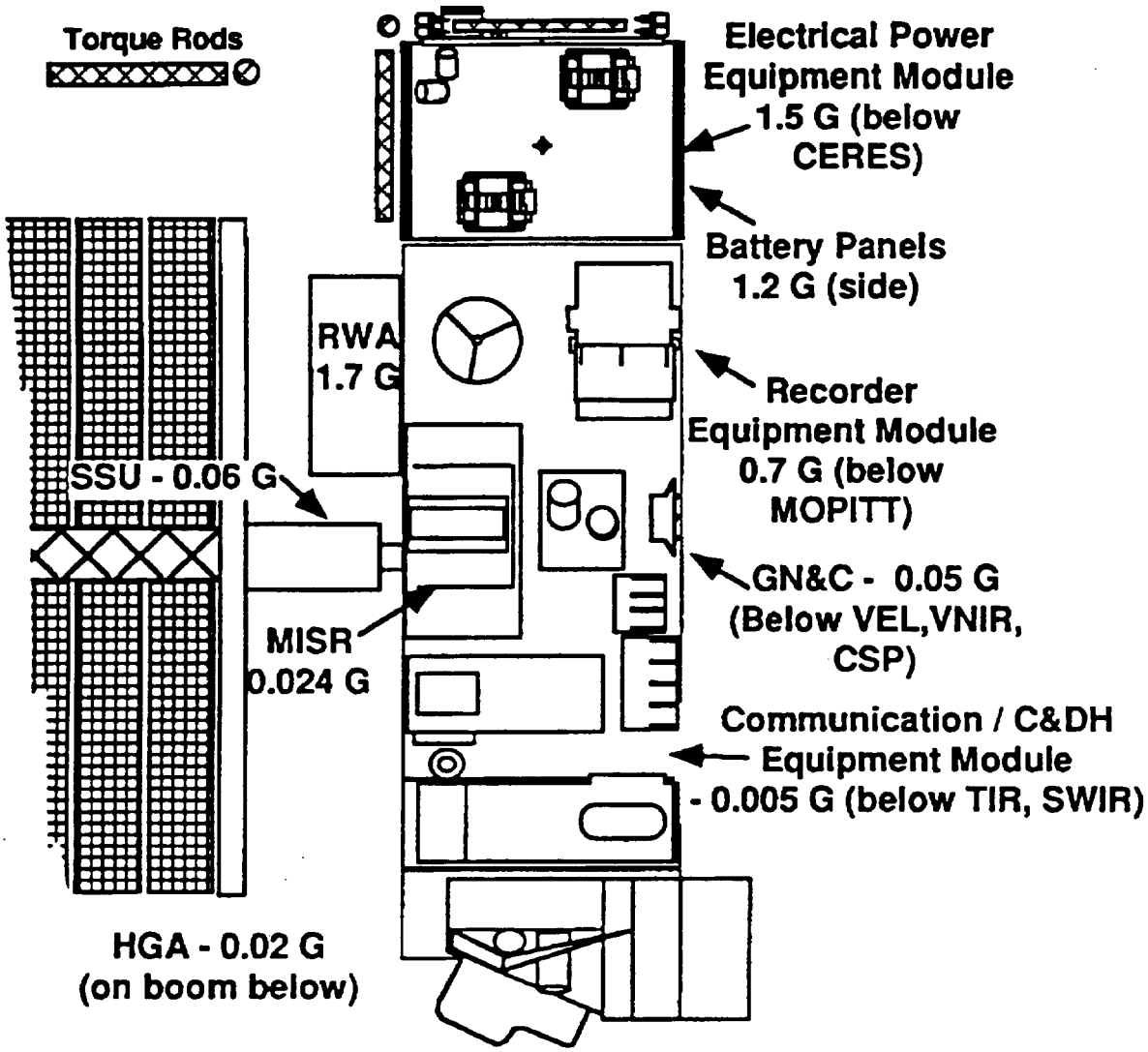

Note: These are the maximum EOS-AM DC-30 Hz Magnetic Field levels

Figure 9. Spacecraft Torquer Rod Magnetic Fields

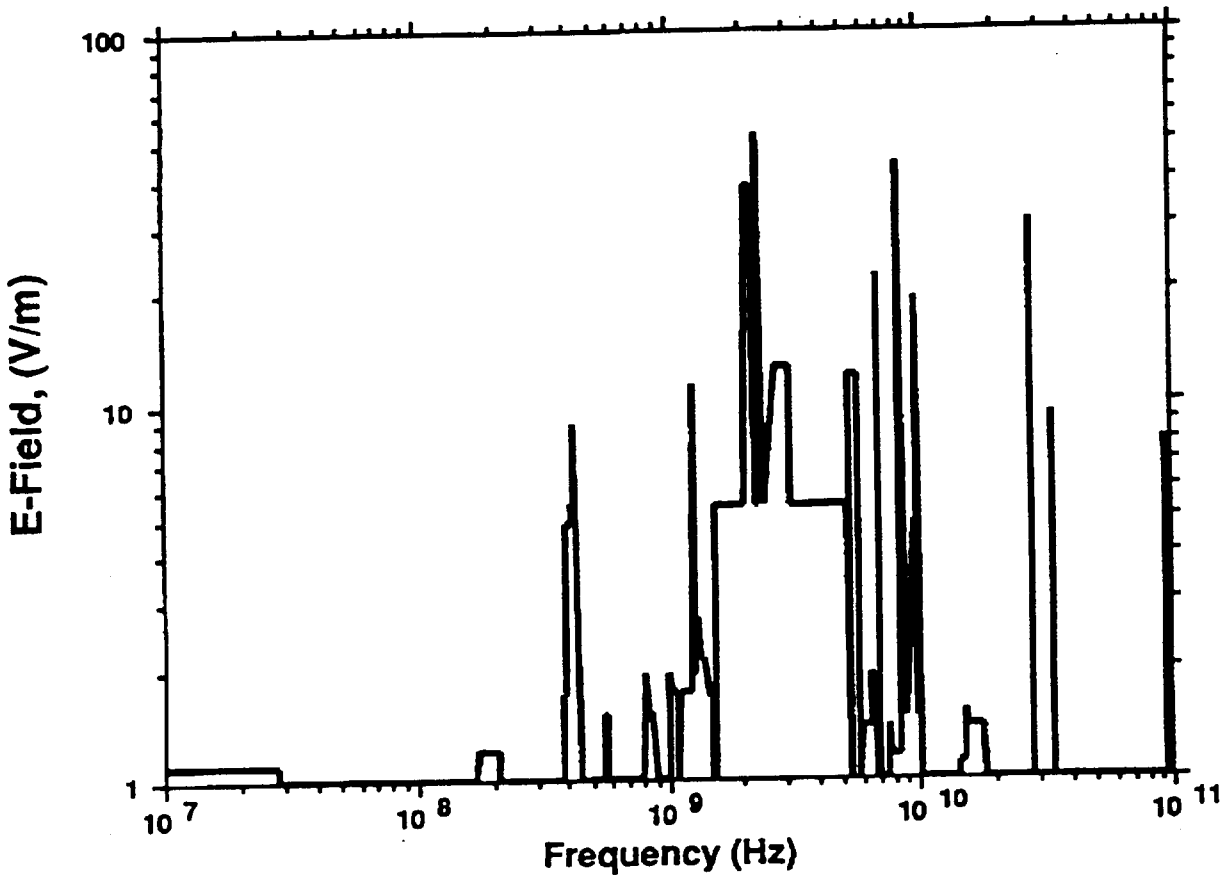

Figure 10. Radiated Susceptibility, Electric Field On–Orbit Environment, ECAC Data (RS03)

Table IX. On–Orbit Environment Electric Field Levels, ECAC Data (RS03)

Frequency GHz	Electric Field Volts/M	Frequency GHz	Electric Field Volts/M	Frequency GHz	Electric Field Volts/M
0.004	1.00	1.240	1.710	6.520	1.910
0.004	1.10	1.260	1.940	6.630	1.710
0.028	1.10	1.280	11.200	6.860	1.000
0.028	1.00	1.300	1.910	7.040	1.000
0.174	1.00	1.340	2.680	7.080	21.900
0.174	1.19	1.370	2.090	7.100	1.000
0.214	1.19	1.410	2.090	7.650	1.000
0.214	1.00	1.460	1.660	7.690	1.380
0.383	1.00	1.510	1.660	7.810	1.160
0.385	1.69	1.510	1.000	8.350	1.160
0.398	1.69	1.550	1.000	8.350	43.700
0.398	4.79	1.560	5.350	8.910	1.450
0.418	4.79	2.060	5.350	9.680	4.790
0.418	5.45	2.100	38.000	9.840	1.450
0.432	5.45	2.200	38.000	10.000	19.100
0.432	8.87	2.240	5.350	10.200	1.000
0.447	1.00	2.310	5.350	14.300	1.000
0.560	1.00	2.350	52.500	14.400	1.100
0.562	1.50	2.470	5.350	15.100	1.120
0.572	1.50	2.770	12.500	15.300	1.510
0.574	1.00	3.110	12.500	15.600	1.380
0.804	1.00	3.160	5.350	18.100	1.380
0.808	1.91	5.270	5.350	18.200	1.000
0.835	1.51	5.290	1.000	28.000	1.000
0.862	1.51	5.330	1.000	28.200	30.200
0.908	1.00	5.350	11.800	28.300	1.000
1.010	1.00	5.810	11.800	34.200	1.000
1.020	1.91	5.840	1.000	34.300	9.380
1.030	1.71	5.880	1.000	34.500	1.000
1.090	1.71	5.910	1.380	94.700	1.000
1.100	1.00	6.410	1.380	95.200	7.940
1.140	1.71	6.410	1.710	95.700	1.000

4.9 Superposition

The radiated and conducted susceptibility requirements will be superimposed on the system critical circuit under investigation to establish the EMISM. This requirement shall be verified by analysis of equipment EMI test data.

4.10 Bonding

All metal components and electrical equipment shall be bonded to the structure grounding system.

The Spacecraft equipment and system electrical ground shall be bonded together so that each metal to metal joint is ≤2.5 mΩ DC resistance between elements. Spacecraft metallic structural elements shall be bonded with less than 2.5 mΩ between joints. Spacecraft mechanical structure which are not part of the SRP shall be bonded together so that DC resistance is less than 10 Ω between joints.

Direct bonding is preferred but movable metal to metal joints may use bonding straps providing ≤2.5 mΩ DC resistance and ≤50 nH inductance. Equipment modules shall be bonded to the structure ground with a less than 2.5 mΩ, and 50 nH bond that does not restrict replacement.

All metalized layers in thermal blankets shall be bonded to structure by less than 1.0 ΩDC and ≤250 nH inductance. All metalized layers of thermal blankets shall be bonded together with less than 3.0 ohms across all layers.

The Bonding surfaces will use conductive corrosion protection such as alodine for aluminum or DOW 19 for magnesium.

4.10.1 Connector and Shield Bonding

Multipin connectors which utilize coaxial or triaxial contacts shall bond the overall shield contact to the interface connectors shell with ≤ 10 mΩ resistance.

The outer shield of all cables shall be 360 degrees bonded to the interface connectors shell.

The outer shield of all coaxial cables shall be bonded to the interfacing equipments case with ≤2.5 mΩ resistance and ≤50 nH inductance.

The outer shield of all twinaxial data bus cables shall be bonded to the interfacing equipments case with ≤2.5 mΩ resistance and ≤50 nH inductance

The case/outer shield of all equipments which connect to the Spacecraft harnesses shall have sufficient shielding to maintain the overall shielding performance of the interfacing cables.

The case/outer shield described above shall be bonded to the SRP (directly or via local ground planes) with each bond contributing ≤2.5 mΩ resistance and ≤50 nH inductance.

All connectors shall provide positive bonding mechanisms between mating connector halves and shall have conductive finishes.

All connectors shall be 360 degree bonded to equipment case. EMI gaskets shall be used where necessary. Each electrical bond shall be ≤2.5 mΩ resistance.

4.11 Grounding, References, and Isolation

The EOS–AM Spacecraft shall conform to the system grounding concept in Figure 11.

4.11.1 Signal Reference Plane Grounding

The Signal Reference Plane (SRP) primary truss structure shall have less than 2.4 μH inductance and 0.1 ohm resistance end to end.

Truss members conductive composite fibers shall be bonded to the Signal Reference Plane with less than 1000 ohms.

The power bus shall be single point referenced (grounded) with less than 2.5 mΩ DC resistance to the Signal Reference Plane at the Prime Power Reference (PPR). The prime power bus shall not use chassis or the SRP as power return.

The prime power bus wiring shall be DC isolated from structure by at least 1 Megohm when the SRP is disconnected from the PPR.

The equipment modules will be grounded to the Signal Reference Plane via the interface connector panel with ≤2.5 mΩ DC resistance.

Each component, equipment case, and/or chassis shall be bonded to the Signal Reference Plane via the equipment modules, direct connection, bond strap or local ground plane per paragraph 4.10.

4.11.2 Kinematic Mount Isolation

Kinematic mounts used for instrument mounting plates or for direct mounting shall provide greater than 10 kohm DC isolation.

4.11.3 Thermal Blanket Grounding

All metalized layers of thermal blankets shall be grounded to the Signal Reference Plane either by direct connection or by bonding to a local chassis or ground plane per Paragraph 4.10.

4.11.4 Secondary Power Referencing

Each secondary power return conductor, (except when Isolated secondary power is used), shall be grounded to chassis locally thereby providing a DC reference path to the Signal Reference Plane. Isolated secondary power is defined as power which is not used to power "Spacecraft to Spacecraft" interface circuits and power which is totally consumed internally.

Isolated secondary circuits may use an internal single point ground system when necessary and when justified through appropriate analysis.

4.11.5 Signal Interfaces Grounding, References, and Isolation

The signal grounding between equipment modules, mounting plates, or system elements will conform to the concept in Figures 12 and 13.

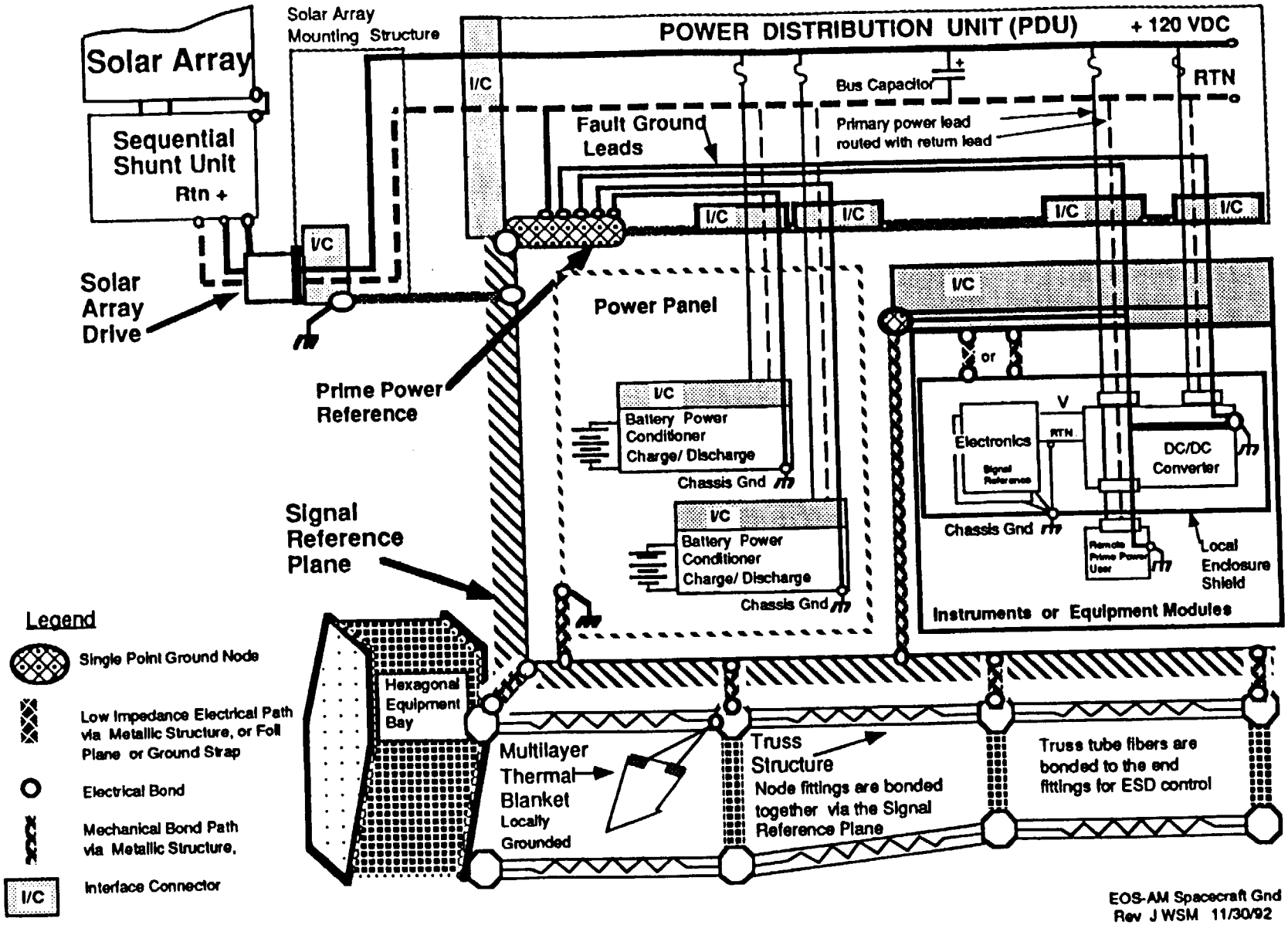

Figure 11. Spacecraft Grounding Concept

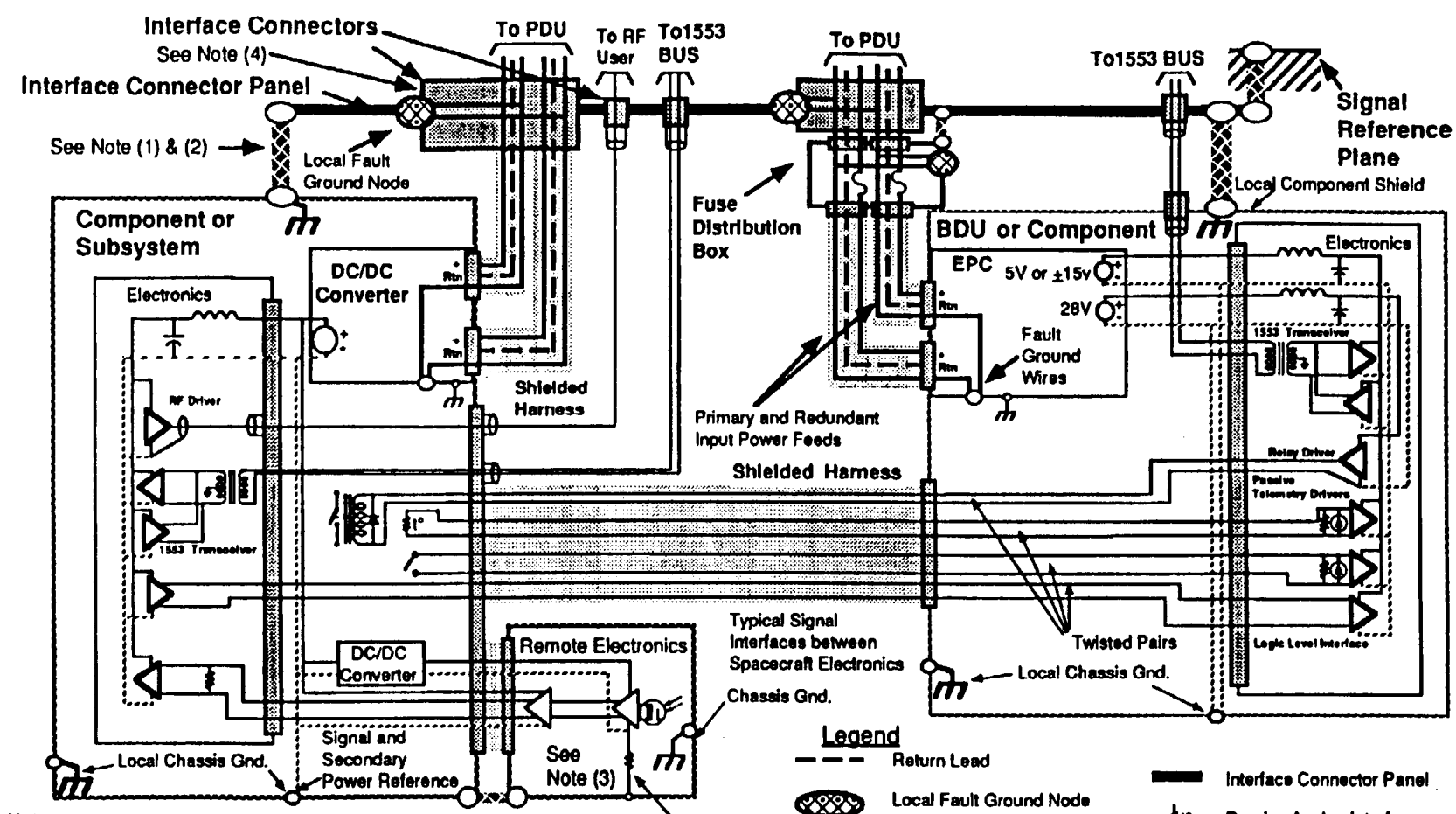

Notes

(1) The low impedance electrical bond paths to the Interface Connector Panel is custom developed for each Equipment Installation.

(2) The RF ground path to the Signal Reference Plane is provided by mechanical bonds between the Interface Connector Panel and the Signal Reference Plane.

(3) An example of how isolated DC power may be used to implement a specific chassis ground or reference impedance at the sensor or similar circuit.

(4) Fault Ground wires are bonded to the connector shell and Interface Connector Panel in the connector half which is permanently bonded to the Interface Connector Panel.

PDU = Power Distribution Unit, BDU = Bus Data Unit, EPC = Electrical Power Conditioner
SFE = Science Formating Electronics

Figure 12. Secondary Electronics Grounding and Data Interface Concept

DCC062893

PN20005869A
28 June 1993

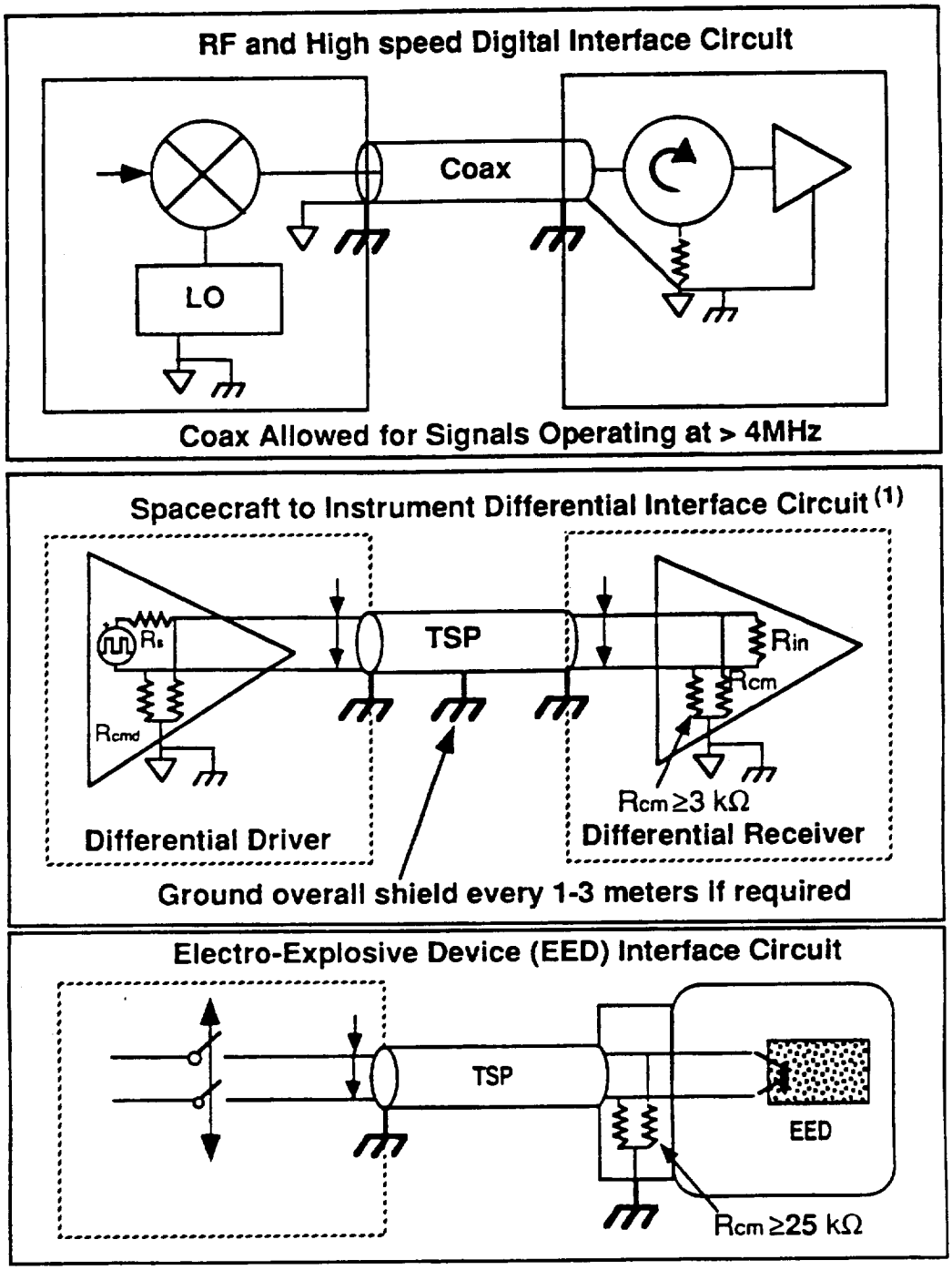

(1) This circuit is RS422 compatible.

Figure 13. Interface Signal Grounding

All differential interface signals between equipment modules shall use a dedicated return conductor (twisted pair) with returns isolated from chassis. The differential interface receiver circuit shall provide 3 kΩ minimum isolation from chassis ground.

RF signal circuits shall utilize coaxial circuit connections and shall be designed so as to minimize the effect of low frequency currents on the outer conductor.

EEDs and other safety critical circuits shall have return conductors isolated from chassis by 2 MΩ minimum when bleeder resistors are disconnected.

Equipment shall bond all data bus cables shields to chassis at the Spacecraft Interface. Data bus cables shields shall be bonded to chassis at both ends. Cables shields may be bonded to the Signal Reference Plane or chassis at 1 to 3 meter spacing if necessary.

Except for High speed digital signals all interface signals with fundamental or risetime frequency components greater than 4 MHz shall require the use of coaxial cable.

High speed digital signal circuits shall be designed to maximize the use of differential drivers and receivers which provide a return which is isolated from chassis.

Passive bi–level and passive analog telemetry sensors shall be isolated from chassis by ≥100k.

4.11.6 Fault Wire Grounding

The Spacecraft shall implement a fault wire grounding system per Figure 11.

The Spacecraft shall route a fault ground lead in each prime power cable.

The Spacecraft shall bond the fault ground lead to the prime power reference at the PDU.

The Spacecraft shall bond the fault ground lead to the Signal Reference Plane at the instrument–to–Spacecraft interconnection.

The Spacecraft shall bond the fault ground lead to the Signal Reference Plane at the equipment module–to–Spacecraft interconnection.

Each prime powered component shall bond the fault ground lead to the component chassis ground.

4.12 Wiring Design

The Spacecraft wiring shall be designed in accordance with NHB5300.4 (3G, 3H) and Table X.

The Spacecraft design shall provide wire segregation, routing, shielding and shield termination. A 30 mm separation distance between bundled cables is suggested to reduce mutual coupling between shield currents. The EMC Design Handbook, GIIS and GIS should be used as a reference for definitions of signal types.

Table X. Wire Design Requirements

Group Designation	Spacecraft Signal Type	Wire Type	Minimum Shielding	Shield Termination
Ia	120 VDC Power	Twisted conductor	OBS	360° @ Backshell
Ib	Secondary Power	Twisted conductor	OBS	360° @ Backshell
IIIa	Analog TLM, Active	Twisted Pair	OBS	360° @ Backshell
IIIb	Analog TLM, Passive	Twisted Pair*	OBS	360° @ Backshell
Ic	Relay Drive Commands	TC (1 Rtn/8 leads with > 2/box)	OBS	360° @ Backshell
Ic	Logic Level Commands	Twisted Pair	OBS	360° @ Backshell
IIIc	Bi–level TLM, Passive	Twisted Pair*	OBS	360° @ Backshell
IIb	Bi–level TLM, Active	Twisted Pair	OBS	360° @ Backshell
Vc	Time Mark and Freq. Bus	Twinax, Similar to Gore CXN2268	2S	360° @ Triaxial Conn.
Vb	Command and TLM Bus	Twinax, Raychem 7724C8664	3S	360° @ 360° Triaxial Conn.
Vb	Science Data (Low Rate)	Twinax, Raychem 7724C8664	3S	360° @ 360° Triaxial Conn.
IIId	Science Data (High Rate)	Dual Gore G2 Coax	2S Foil/Braid	360° @ SMA Conn.
Va	RF/μWave	Coax/waveguide	2S Foil/Braid	360° @ SMA Conn.
IV	EED (Pyro)	1STP	Wrap bundle	360° @ Backshell

Notes:

OBS = Overall bundle shield; **TC** = Twisted conductor **Coax** = Coaxial cable;
Twinax = Controlled impedance twisted shielded pair; **1S** = Single shield; **2S** = Double shield;
3S = Triple shield; **TLM** = Telemetry; * = May be shielded based on location;
Conn. = Connector

Group designations defined in MIL–W–83575A.

5 INSTRUMENT EMI REQUIREMENTS

5.1 Radiated Emissions (RE02, RE04)

Instruments shall limit broadband and narrowband electric field emissions (RE02) to levels less than the limits specified in Figure 14. Instruments consisting of more than one stand–alone component shall meet the levels of Figure 14 for each component.

Instruments shall limit magnetic field emissions (RE04) to levels less than the limits specified in Figure 15 when measured at a distance of 1 meter from the instrument enclosure.

5.2 Conducted Emissions

Instruments shall limit Prime Power conducted emissions to levels less than the limits specified in Figure 16.

Instruments shall limit Prime Power common mode conducted emissions to levels less than the limits specified in Figure 17.

Instruments shall limit repetitive spikes to less than the limits specified in Figure 16 and Figure 17.

5.3 Radiated Susceptibility and Definition of Susceptibility Criteria

The susceptibility criteria for instruments has been divided into three categories. These categories are survive, operate and perform and are defined as follows:

a. Survive is defined as the ability to withstand the applied environment without any permanent loss of performance capability. Survival is required for both powered and unpowered states.

b. Operate is defined as the ability to withstand the applied environment without malfunction, loss of capability, change of operation state/mode, memory changes or need for outside intervention. Operate is the ability of an instrument to execute all ancillary and housekeeping tasks including self test but does not include the ability to take scientific data.

c. Perform is defined as the ability to execute its science mission or to meet its specified performance.

The applicability of the above susceptibility criteria verses the applied environmental levels for the instrument is detailed in Table XI.

5.3.1 Radiated Susceptibility, Electric Fields (RS03)

Instruments shall survive exposure to the radiated susceptibility environments specified in Figure 18.

Instruments shall perform when subjected to the radiated susceptibility environment specified in Figure 19.

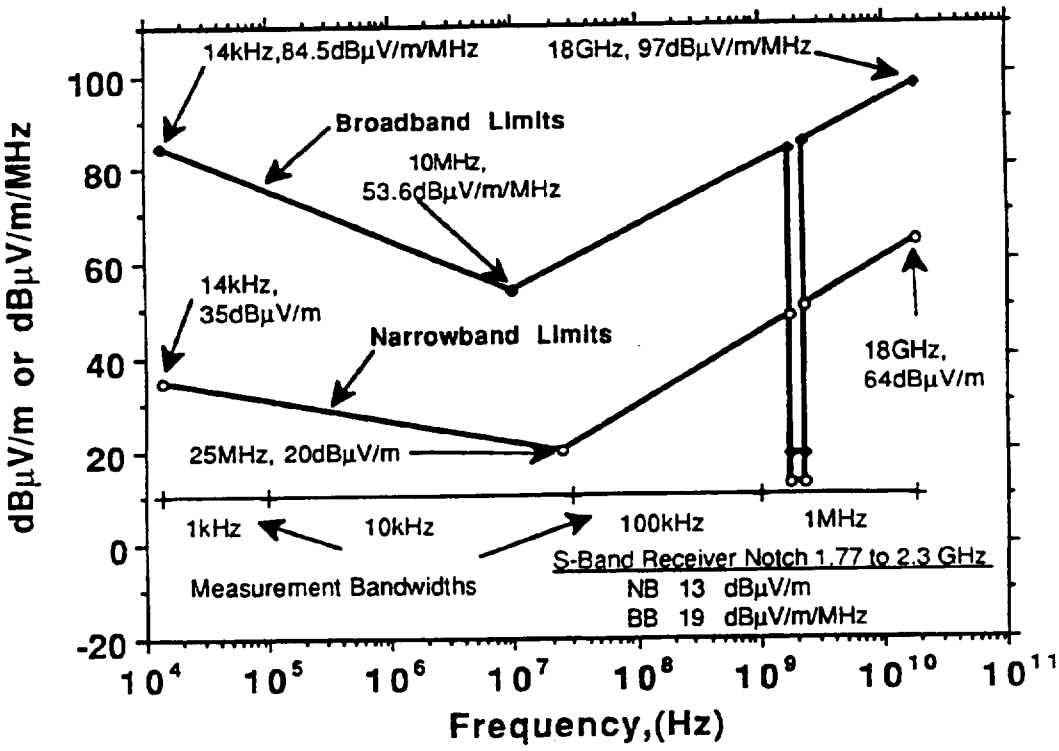

Figure 14. Instrument Radiated Electric Field Emissions Limits (RE02)

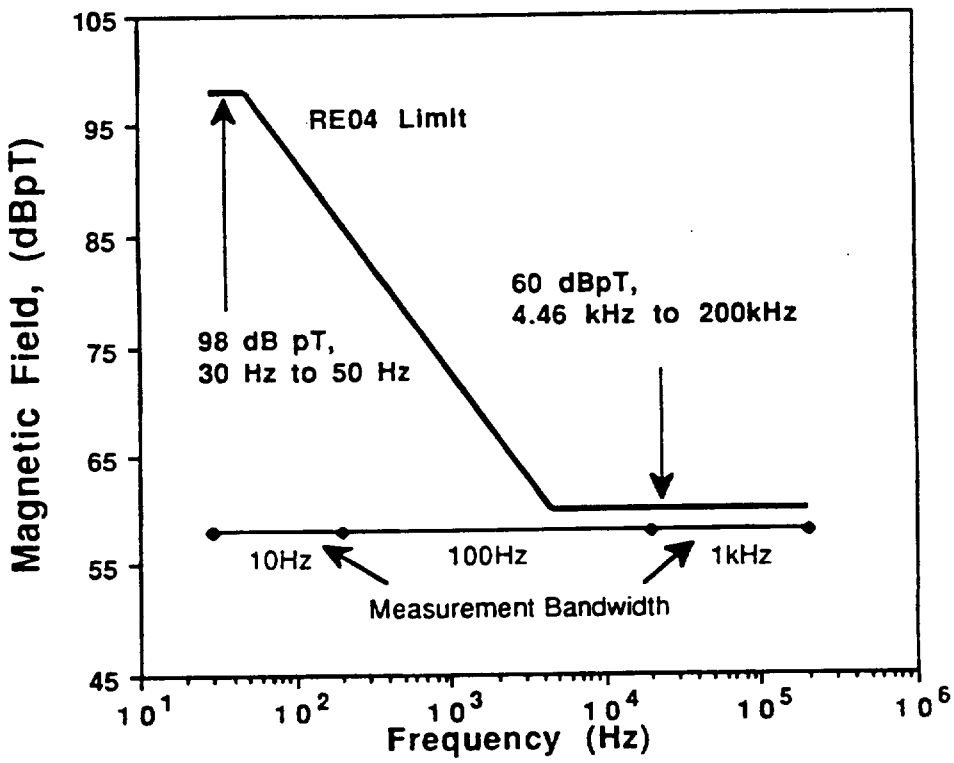

Figure 15. Instrument Radiated Magnetic Field Emissions Limit (RE04)

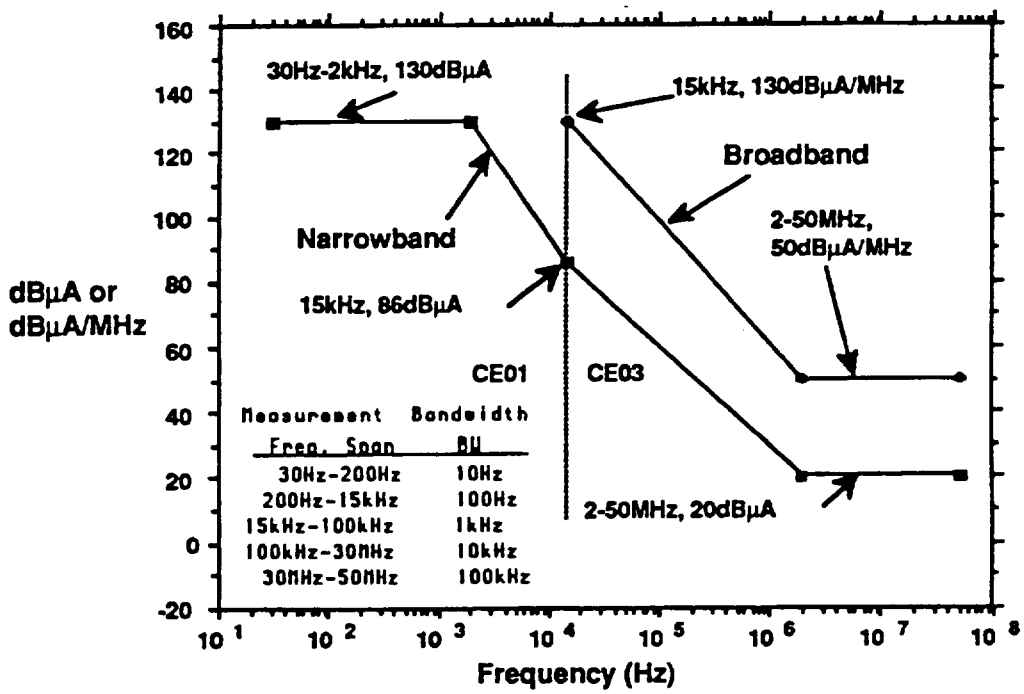

Figure 16. Instrument Conducted Emissions Limits

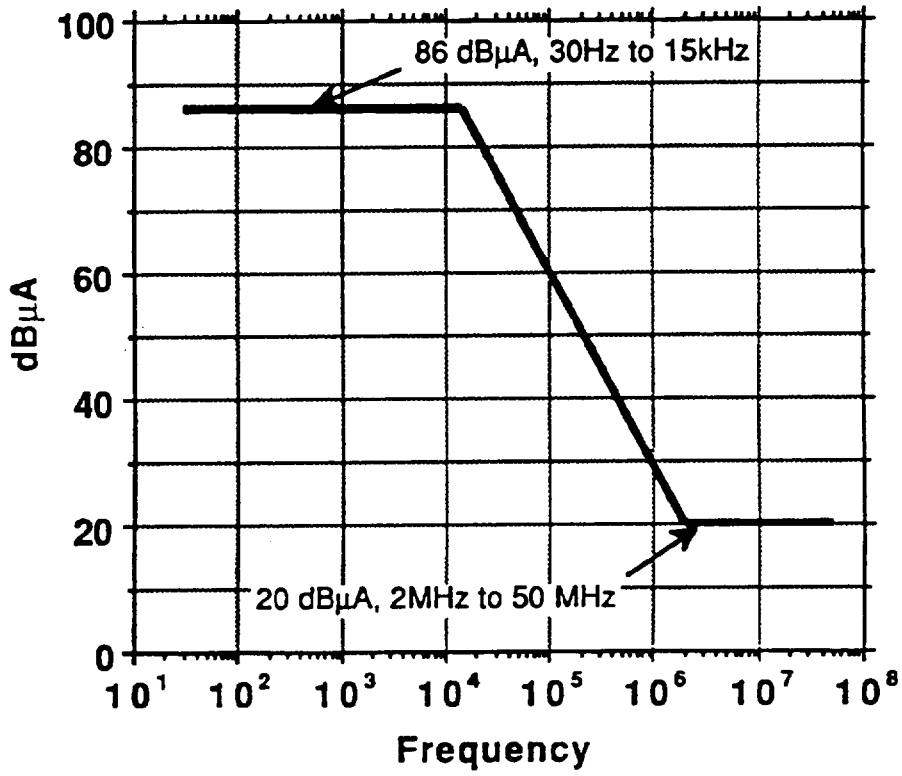

Figure 17. Instrument Common Mode Conducted Emissions Limit

Table XI. Instrument Susceptibility Requirements

Test	Instruments		
	Survive	Operate	Perform[5]
CS01	–	–	Y
CS02	–	–	Y
CS06	Y[7]	Y	Y[8]
RS01	–	–	Y
RS03[1]	Y[4]	N[4]	N
RS03[2]	Y[4]	Y[4]	D[4]
RS03[3]	Y	Y	Y
Magnetic Properties[6][9]	Y	Y	Y

Y = Applicable; N = Not Applicable; D = Degraded Sensitivity, Test Plan specifies limits

(1) Composite of normal checkout, Atlas, Titan, and launch susceptibility levels (Figure 18)
(2) On–orbit susceptibility levels from Electromagnetic Compatibility Analysis Center (ECAC) data for EOS–AM orbit (Figure 22)
(3) On–orbit Spacecraft generated susceptibility levels (Figure 19)
(4) By analysis or test
(5) Definition of susceptibility (i.e., criteria for performance) defined in test plan.
(6) Immunity to Spacecraft and Earth generated magnetic fields
(7) The CS06 Survive levels are **(TBR–1)**
(8) The CS06 Perform levels are **(TBR–2)**
(9) Box level test

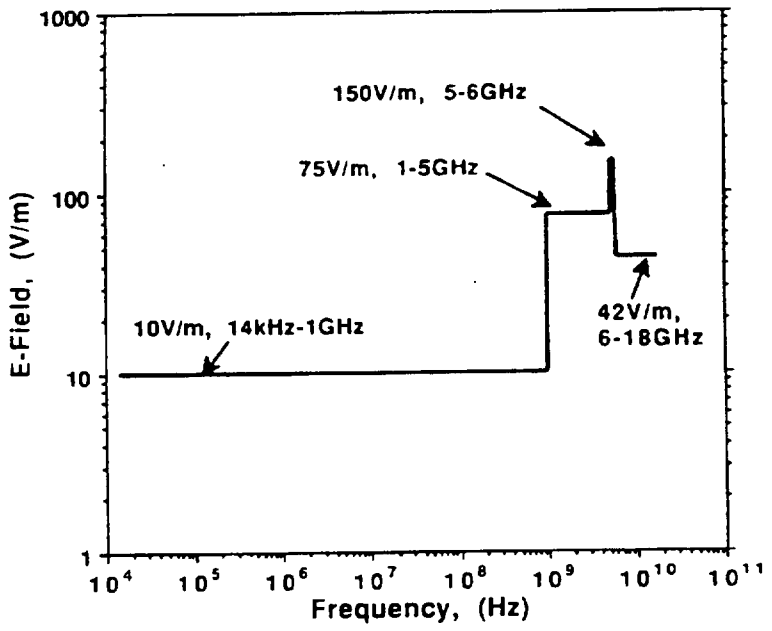

Figure 18. Instrument Launch Electric Field Radiated Susceptibility Survival Limit (RS03)

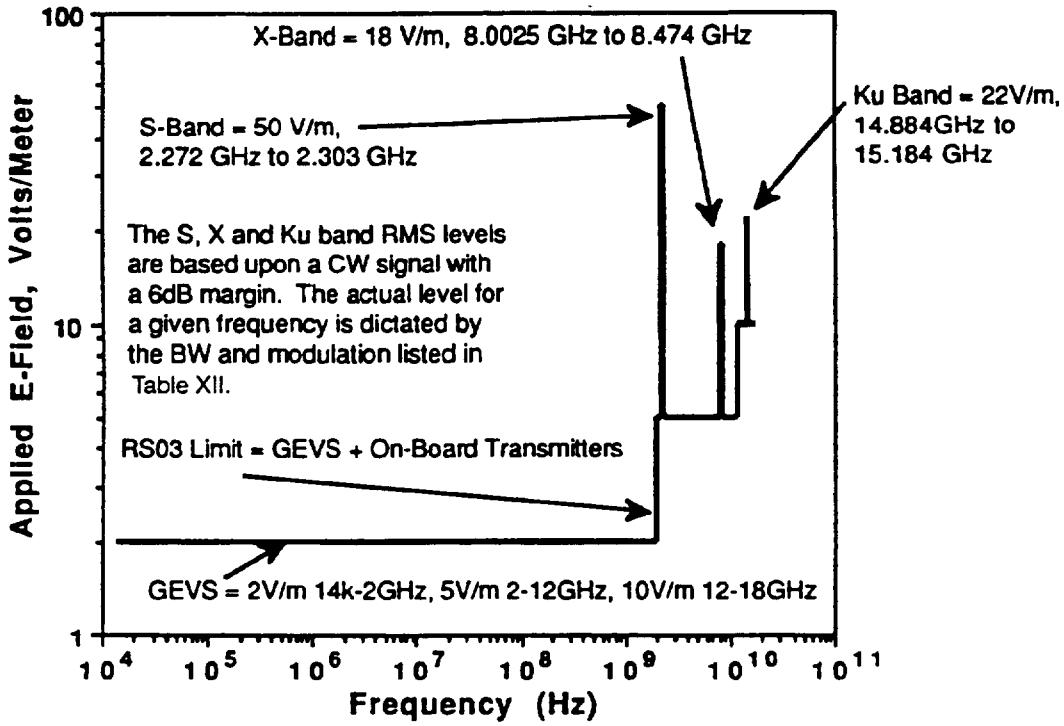

Figure 19. Instrument Perform Electric Field Radiated Susceptibility Performance Limit (RS03)

Table XII. Spacecraft–Generated EOS–AM RF Sources

Transmitter	Band	Center Frequency (GHz)	Modulation Type	Bandwidth (MHz)	Volts/m @ Inst (E_{peak})
HGA	Ku	15.0034	SQPSK	300(1)	22
HGA	S	2.2875	SQPN	6–15(1)	
OMNI–TDRSS	S	2.2875	SQPN	6–15(1)	50
DAS–DP	X	8.2125	SQPSK	300(1)	18
DAS–DB	X	8.2125	SQPSK	60(1)	18
DAS–DB/DDL	X	8.2125	SQPSK	420(1)	18
OMNI–GN	S(3)	2.2875	PSK/PM	2.112(2)	50
–DSN	S(3)	2.2875	PM	2.112	50
–WTS	S(3)	2.2875	PM	2.112	50

(1) Width of main lobe of the transmitter spectrum (null to null).

(2) 16 kbps bi–phase data PSK modulated on a 1.024 MHz carrier which, in turn, is phase modulated on the RF carrier with Beta = 0.8 radian peak.

(3) Will be operated only in communication contingency and emergency modes. Instrument performance requirement in these modes is not required.

5.3.2 Radiated Susceptibility, Magnetic Fields (RS01)

The instruments shall perform when subjected to the radiated magnetic field requirement of Figure 20 and the magnetic field requirement of Figure 21. Figure 21 shows the estimate of worst–case magnetic fields at various locations on the Spacecraft produced by the magnetic torque rods.

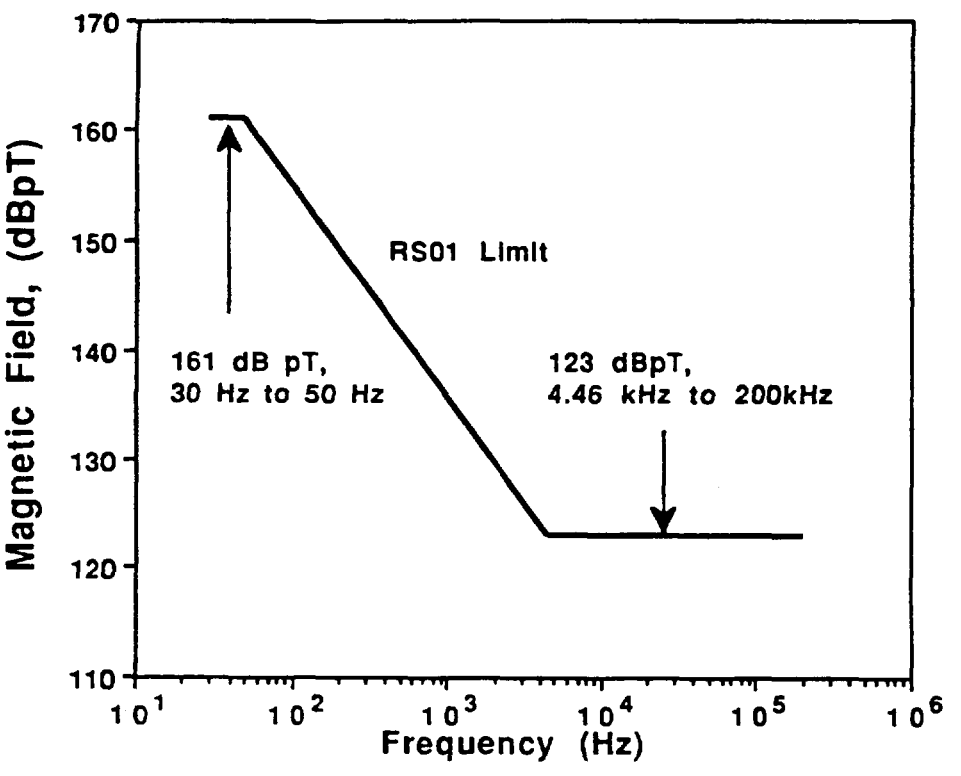

Figure 20. Instrument Magnetic Field Radiated Susceptibility Performance Limit (RS01)

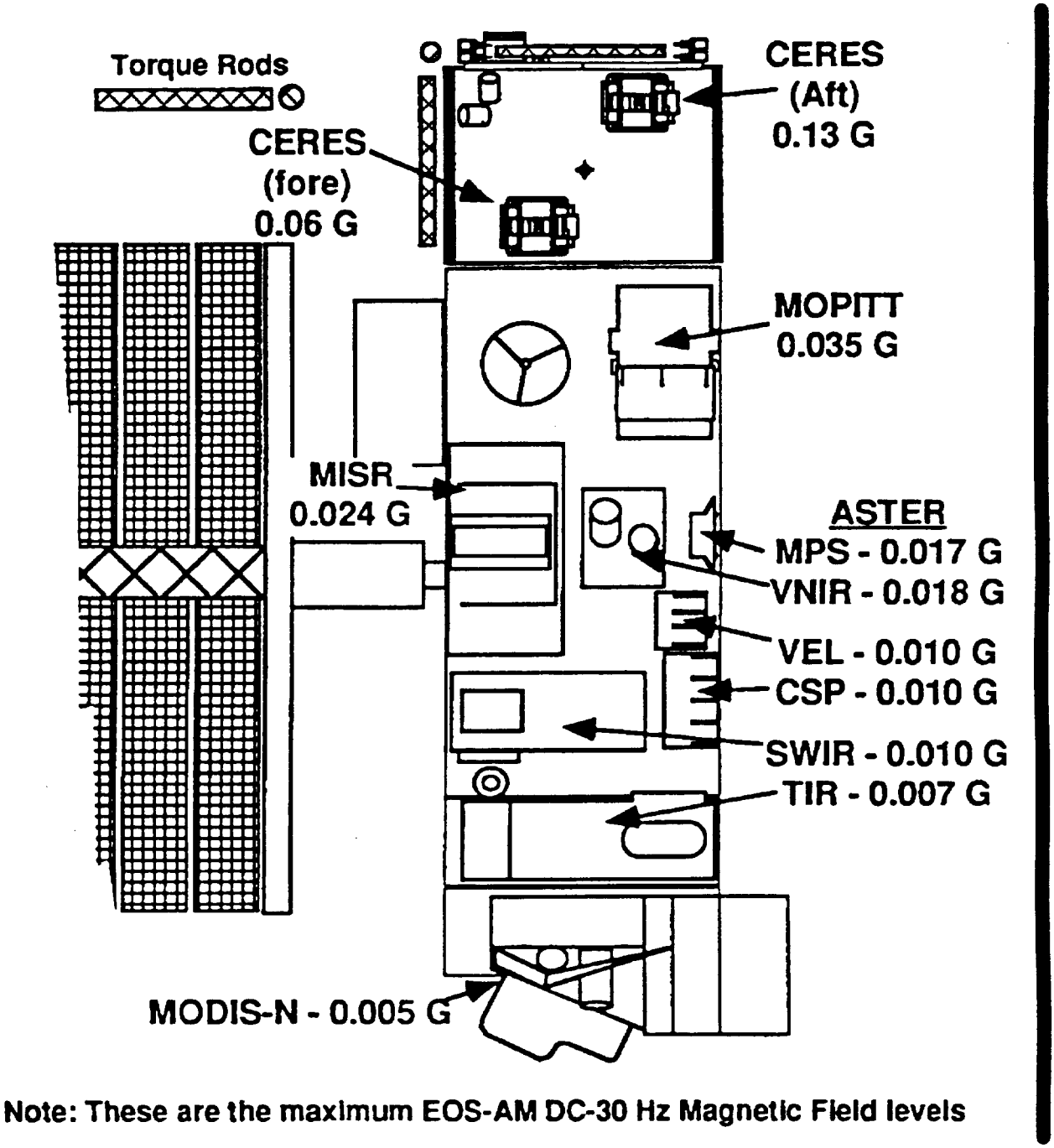

Figure 21. Spacecraft Torquer Rod Magnetic Fields

5.3.3 Radiated Susceptibility, On–Orbit Environment (RS03)

Instruments shall operate when subjected to the on–orbit environment of Figure 22 and Table XIII. Instruments shall be characterized and evaluated to determine performance susceptibility/responses to the on–orbit environments. Specific performance criteria and analysis shall be detailed in the Instrument EMC Test Plan.

The on–orbit electric field levels describe the RS03 environment for the EOS–AM polar orbit as reported by the Electromagnetic Compatibility Analysis Center (ECAC).

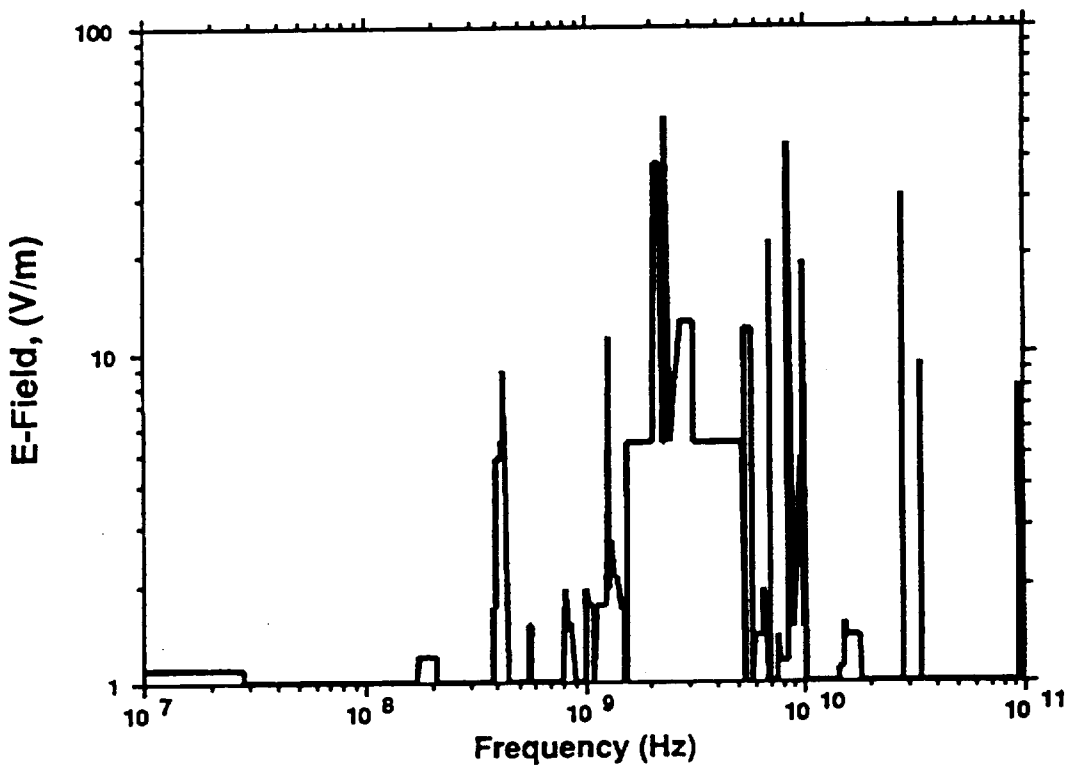

Figure 22. Instrument On–Orbit Environment Electric Field Levels, ECAC Data (RS03)

Table XIII. On–Orbit Environment Electric Field Levels, ECAC Data (RS03)

Frequency GHz	Electric Field Volts/M	Frequency GHz	Electric Field Volts/M	Frequency GHz	Electric Field Volts/M
0.004	1.00	1.240	1.710	6.520	1.910
0.004	1.10	1.260	1.940	6.630	1.710
0.028	1.10	1.280	11.200	6.860	1.000
0.028	1.00	1.300	1.910	7.040	1.000
0.174	1.00	1.340	2.680	7.080	21.900
0.174	1.19	1.370	2.090	7.100	1.000
0.214	1.19	1.410	2.090	7.650	1.000
0.214	1.00	1.460	1.660	7.690	1.380
0.383	1.00	1.510	1.660	7.810	1.160
0.385	1.69	1.510	1.000	8.350	1.160
0.398	1.69	1.550	1.000	8.350	43.700
0.398	4.79	1.560	5.350	8.910	1.450
0.418	4.79	2.060	5.350	9.680	4.790
0.418	5.45	2.100	38.000	9.840	1.450
0.432	5.45	2.200	38.000	10.000	19.100
0.432	8.87	2.240	5.350	10.200	1.000
0.447	1.00	2.310	5.350	14.300	1.000
0.560	1.00	2.350	52.500	14.400	1.100
0.562	1.50	2.470	5.350	15.100	1.120
0.572	1.50	2.770	12.500	15.300	1.510
0.574	1.00	3.110	12.500	15.600	1.380
0.804	1.00	3.160	5.350	18.100	1.380
0.808	1.91	5.270	5.350	18.200	1.000
0.835	1.51	5.290	1.000	28.000	1.000
0.862	1.51	5.330	1.000	28.200	30.200
0.908	1.00	5.350	11.800	28.300	1.000
1.010	1.00	5.810	11.800	34.200	1.000
1.020	1.91	5.840	1.000	34.300	9.380
1.030	1.71	5.880	1.000	34.500	1.000
1.090	1.71	5.910	1.380	94.700	1.000
1.100	1.00	6.410	1.380	95.200	7.940
1.140	1.71	6.410	1.710	95.700	1.000

5.4 Conducted Susceptibility (CS01, CS02, CS06)

Instruments shall Perform when subjected to conducted sinewave and pulse modulated (CS01/CS02) noise injected on the primary power input per Figure 23.

Instruments shall Operate when subjected to transient noise (CS06) injected on the primary power input as shown in Figure 24.

Instruments shall Survive when subjected to transient noise (CS06–Survive) injected on the primary power input as shown in Figure 25.

Instruments shall Perform when subjected to transient noise (CS06–Perform) injected on the primary power input as shown in Figure 26.

5.5 Not Used

5.6 Not Used

5.7 Instrument Magnetic Properties

Each instrument stand–alone component static dipole moment shall not exceed 0.3 Am^2 initially and shall not exceed 0.3 Am^2 after torque rod activity.

5.8 Electromagnetic Interference Safety Margin

The Electromagnetic Interference Safety Margin (EMISM) for safety critical circuits (such as EEDs) shall be 20 dB, verified by analysis or test. EMISM for other EMC elements shall be 6 dB, verified by comparison of emissions and susceptibility test data.

5.9 Superposition

The radiated and conducted susceptibility requirements will be superimposed on the system critical circuit under investigation to establish the EMISM. This requirement shall be verified by analysis of equipment EMI test data.

5.10 Bonding

The instrument bonding requirements are as follows:

All metal components and electrical equipment shall be bonded to the Signal Reference Plane.

The instruments equipment and system electrical ground shall be bonded together so that each metal to metal joint is ≤2.5 mΩ DC resistance between elements. Instrument mechanical structures which are not part of the SRP shall be bonded together so that DC resistance is less than 10 Ω between joints.

Direct bonding is preferred but movable metal to metal joints may use bonding straps providing ≤2.5 mΩ DC resistance and ≤50 nH inductance. Instrument shall be bonded to the SRP with a less than 2.5 mΩ, and 50 nH bond that does not restrict replacement.

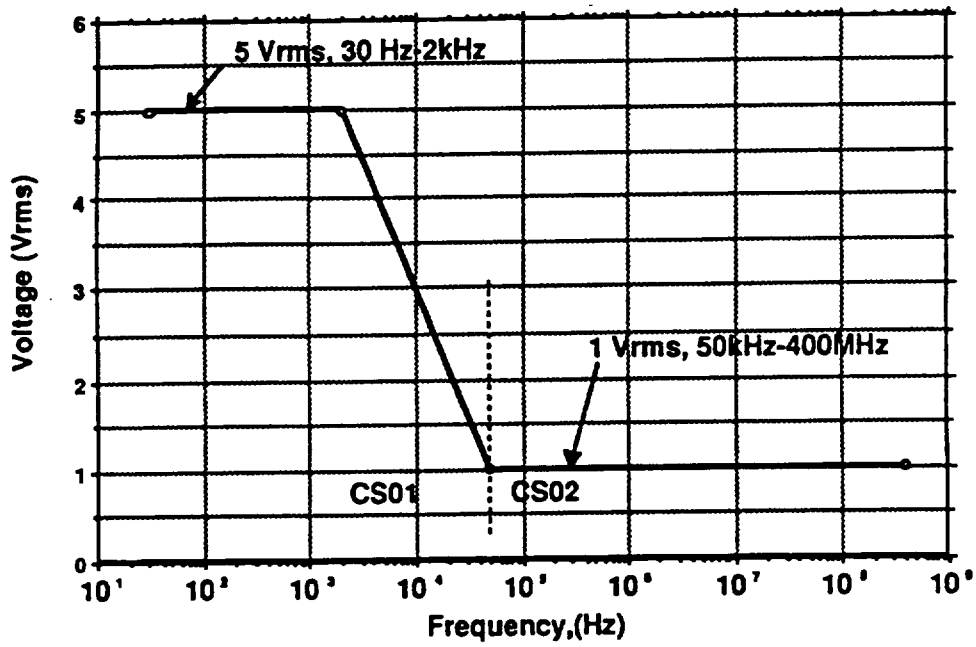

Figure 23. Instrument Conducted Susceptibility Limit (CS01/CS02)

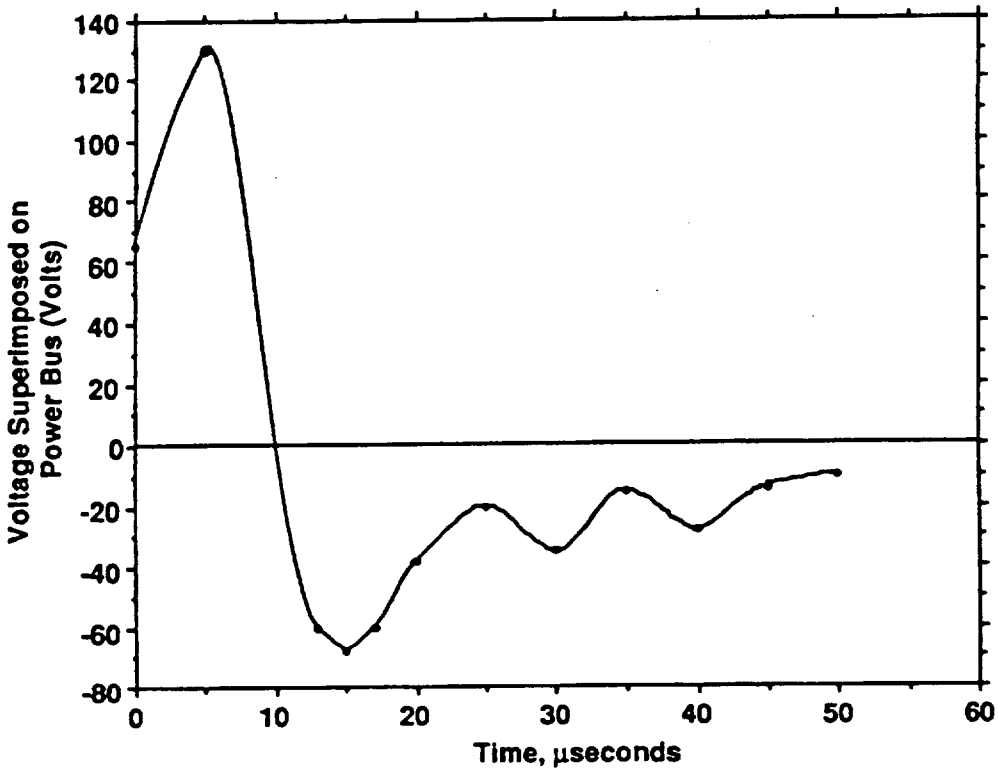

Figure 24. Instrument Conducted Transient Susceptibility Limit (CS06)

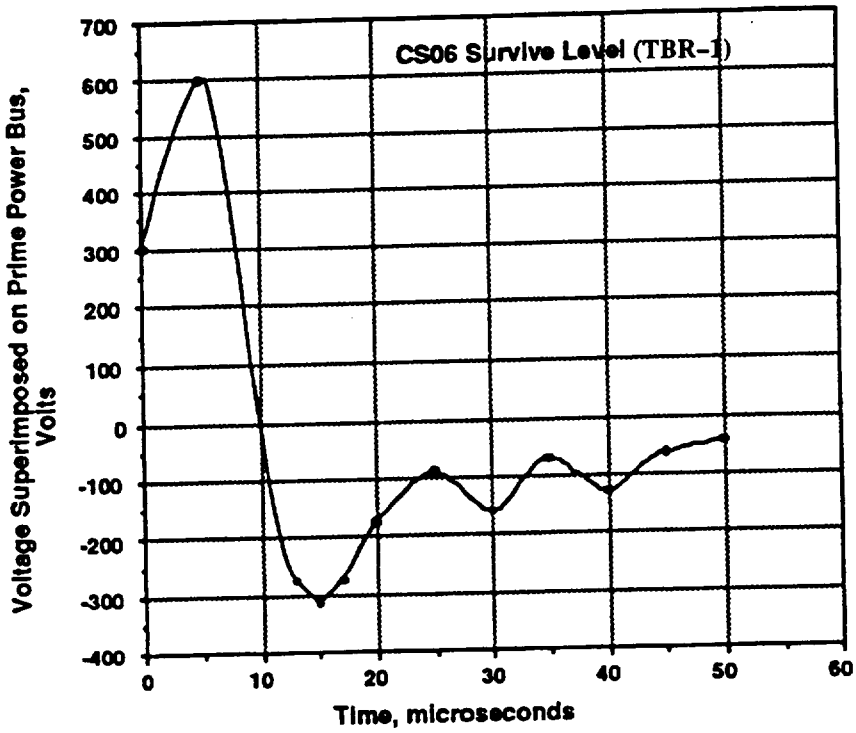

Figure 25. Instrument Conducted Transient Susceptibility Limit (CS06 – Survive)

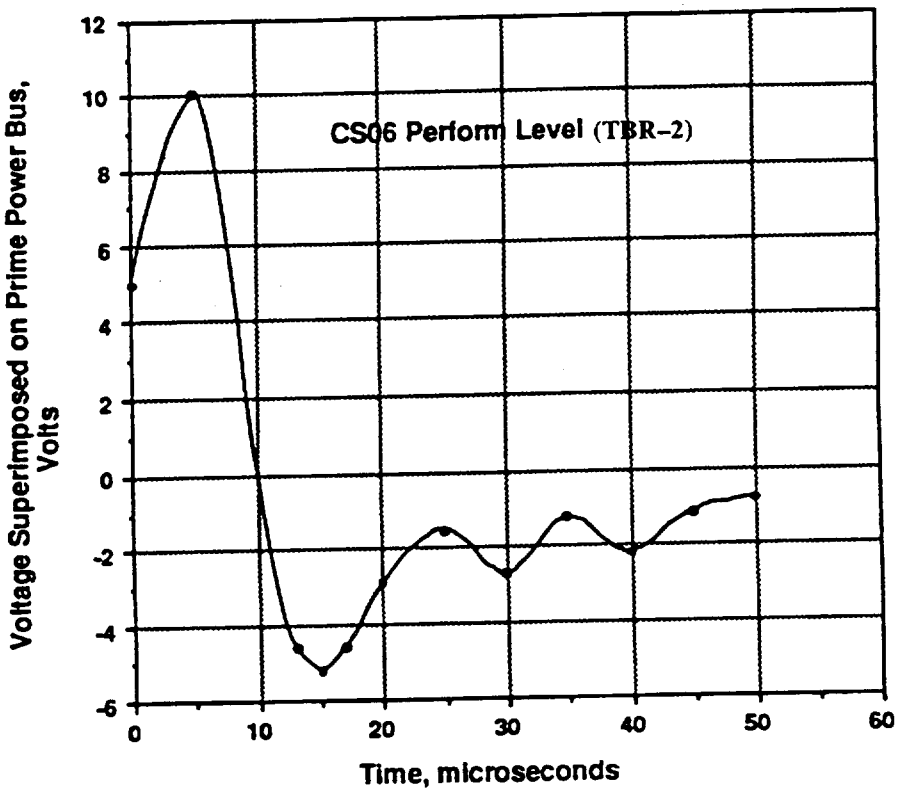

Figure 26. Instrument Conducted Transient Susceptibility Limit (CS06 – Perform)

All metalized layers in thermal blankets shall be bonded to the SRP (directly or via local ground planes) by less than 10 Ω DC and ≤250 nH inductance. All metalized layers of thermal blankets shall be bonded together with less than 30 ohms across all layers.

The bonding surfaces shall use conductive corrosion protection such as alodine for aluminum or DOW 19 for magnesium.

5.10.1 Connector and Shield Bonding

The instrument interface connector and shield bonding requirements are as follows:

Multipin connectors which utilize coaxial or triaxial contacts shall bond the overall shield contact to the interface connectors shell with ≤ 10 mΩ resistance.

The outer shield of all cables shall be 360 degrees bonded to the interface connector shell.

The outer shield of all coaxial cables shall be bonded to the interfacing equipment case with ≤2.5 mΩ resistance and ≤50 nH inductance.

The outer shield of all twinaxial data bus cables shall be bonded to the interfacing equipment case with ≤2.5 mΩ resistance and ≤50 nH inductance.

The case/outer shield of all equipment which connect to the Spacecraft harnesses shall have sufficient shielding to maintain the overall shielding performance of the interfacing cables.

The case/outer shield described above shall be bonded to the SRP(directly or via local ground planes) with each bond contributing ≤2.5 mΩ resistance and ≤50 nH inductance. All connectors shall provide positive bonding mechanisms between mating connector halves and shall have conductive finishes.

Instruments shall bond all data bus cables shields to chassis at the Spacecraft Interface.

All connectors shall be 360 degree bonded to Instrument case. EMI gaskets shall be used where necessary. Each electrical bond shall be ≤2.5 mΩ resistance.

5.11 Grounding, References, and Isolation

5.11.1 Signal Reference Plane Grounding

The EOS–AM Spacecraft will conform to the system grounding concept in Figure 27.

Instruments shall not use chassis or the SRP as power return or reference for Prime Power.

The instrument prime power leads and returns shall be DC isolated from the SRP by at least 1 Megohm.

The instruments will be grounded to the Signal Reference Plane via the interface connector panel with ≤2.5 mΩ DC resistance.

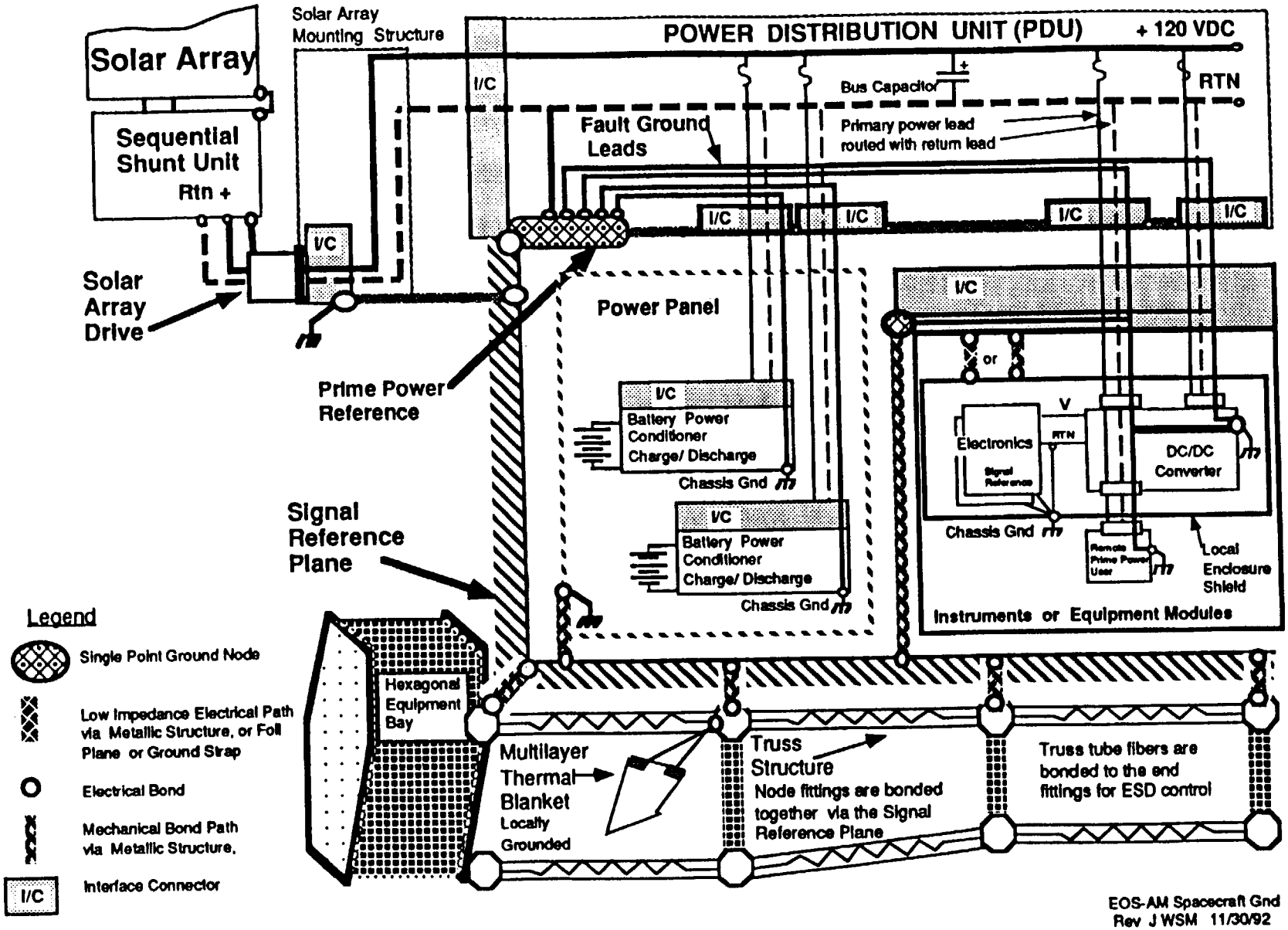

Figure 27. Spacecraft Grounding Concept

Each component, and/or instrument chassis shall be bonded to the Signal Reference Plane via direct connection, bond strap, or instrument ground interconnection.

5.11.2 Kinematic Mount Isolation

Kinematic mounts used for instrument mounting plates or for direct mounting will provide greater than 10 kohm DC isolation.

5.11.3 Thermal Blanket Grounding

All metallized layers of thermal blankets shall be grounded to the Signal Reference Plane either by direct connection or by bonding to a local chassis or ground plane.

5.11.4 Secondary Power Referencing

Each secondary power return conductor, (except when Isolated secondary power is used), shall be grounded to chassis locally thereby providing a DC reference path to the Signal Reference Plane. Isolated secondary power is defined as power which is not used to power "Instrument–to–Spacecraft" interface circuits and power which is totally consumed internally.

Instruments may use may use an internal single point ground system for isolated secondary circuits such as sensors, and these may be referenced to chassis by any instrument selected real value (i.e., in DC ohms).

Circuits internal to the instruments shall not degrade the system ground and shall limit currents flowing in the instrument chassis.

5.11.5 Signal Interfaces, Grounding, References, and Isolation

The signal grounding between instrument components, Spacecraft system elements, and SRP located BDUs will conform to the concept in Figure 28 and Figure 30. ASTER shall conform to the signal grounding concept in Figure 29 for its collocated BDU (i.e., on the same ground island). All differential interface signals between instrument and Spacecraft electronics shall use a dedicated return conductor (twisted pair) with returns isolated from chassis. The differential interface receiver circuit shall provide 3 kΩ minimum isolation from chassis ground.

RF signal circuits shall utilize coaxial circuit connections and shall be designed so as to minimize the effect of low frequency currents on the outer conductor.

Except for High speed digital signals all interface signals with fundamental or risetime frequency components greater than 4 MHz shall require the use of coaxial cable.

High speed digital signal circuits shall be designed to maximize the use of differential drivers and receivers which provide a return which is isolated from chassis.

High speed digital signal circuits shall use twinaxial cable unless design constraints require coax or dual coax.

Passive bi–level and passive analog telemetry sensors shall be isolated from chassis by ≥100k.

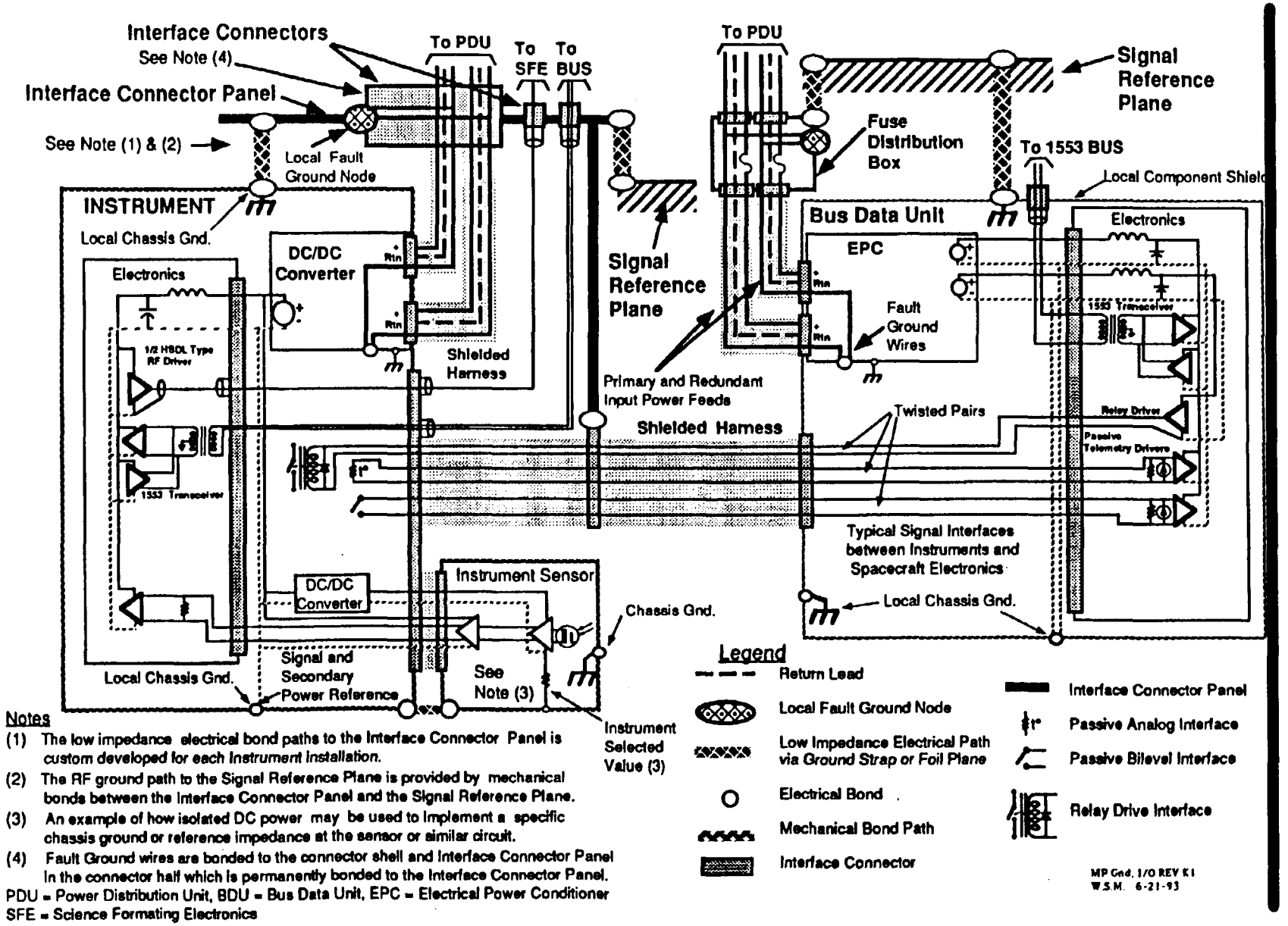

Notes

(1) The low impedance electrical bond paths to the Interface Connector Panel is custom developed for each Instrument Installation.

(2) The RF ground path to the Signal Reference Plane is provided by mechanical bonds between the Interface Connector Panel and the Signal Reference Plane.

(3) An example of how isolated DC power may be used to implement a specific chassis ground or reference impedance at the sensor or similar circuit.

(4) Fault Ground wires are bonded to the connector shell and Interface Connector Panel in the connector half which is permanently bonded to the Interface Connector Panel.

PDU = Power Distribution Unit, BDU = Bus Data Unit, EPC = Electrical Power Conditioner
SFE = Science Formating Electronics

Figure 28. Secondary Electronics Grounding and Data Interface Concept for All Instruments

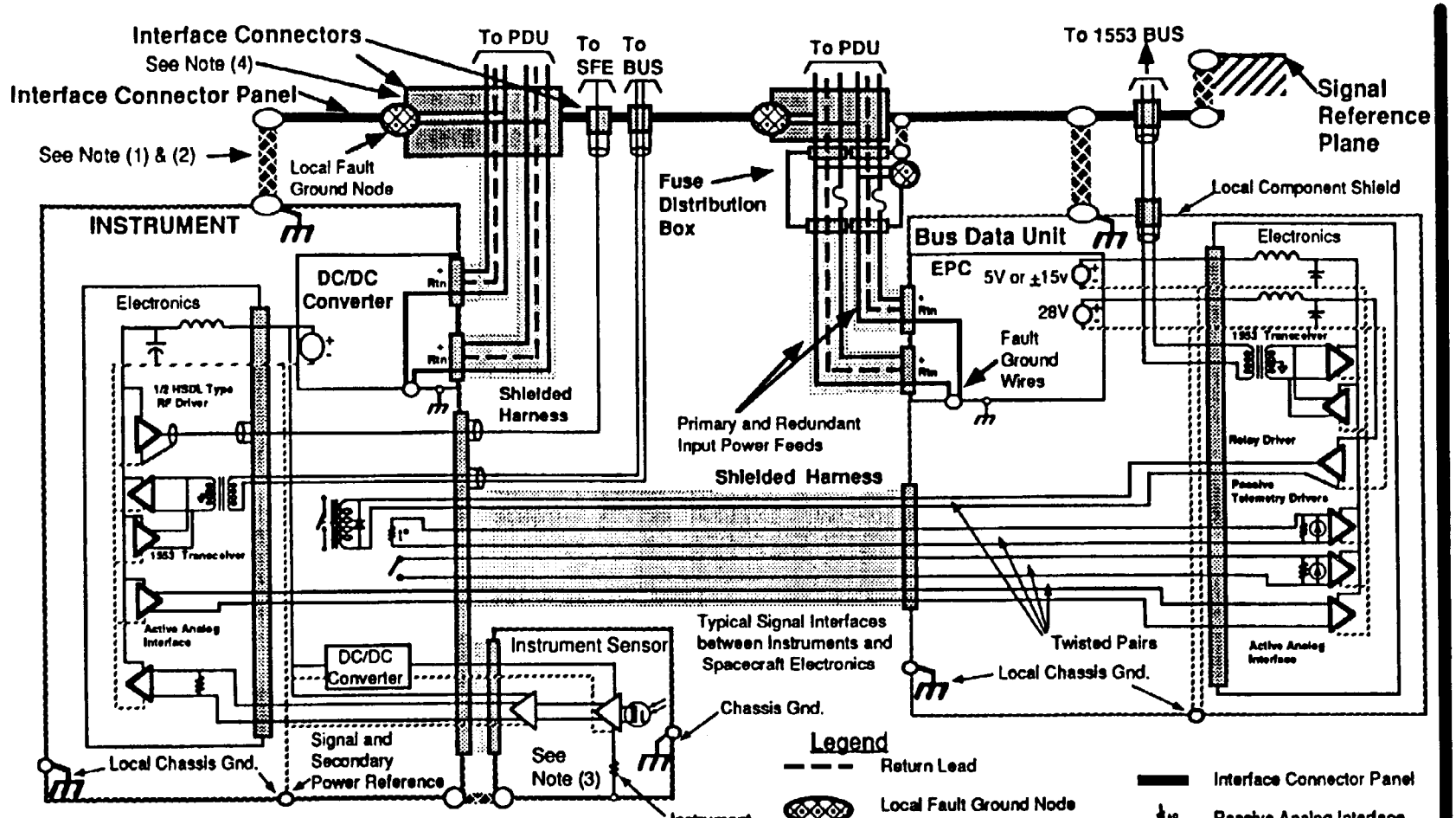

Notes

(1) The low impedance electrical bond paths to the Interface Connector Panel is custom developed for each Instrument installation.

(2) The RF ground path to the Signal Reference Plane is provided by mechanical bonds between the Interface Connector Panel and the Signal Reference Plane.

(3) An example of how isolated DC power may be used to implement a specific chassis ground or reference impedance at the sensor or similar circuit.

(4) Fault Ground wires are bonded to the connector shell and Interface Connector Panel in the connector half which is permanently bonded to the Interface Connector Panel.

PDU = Power Distribution Unit, BDU = Bus Data Unit, EPC = Electrical Power Conditioner
SFE = Science Formating Electronics

Figure 29. Secondary Electronics Grounding and Data Interface Concept for ASTER to Collocated BDU

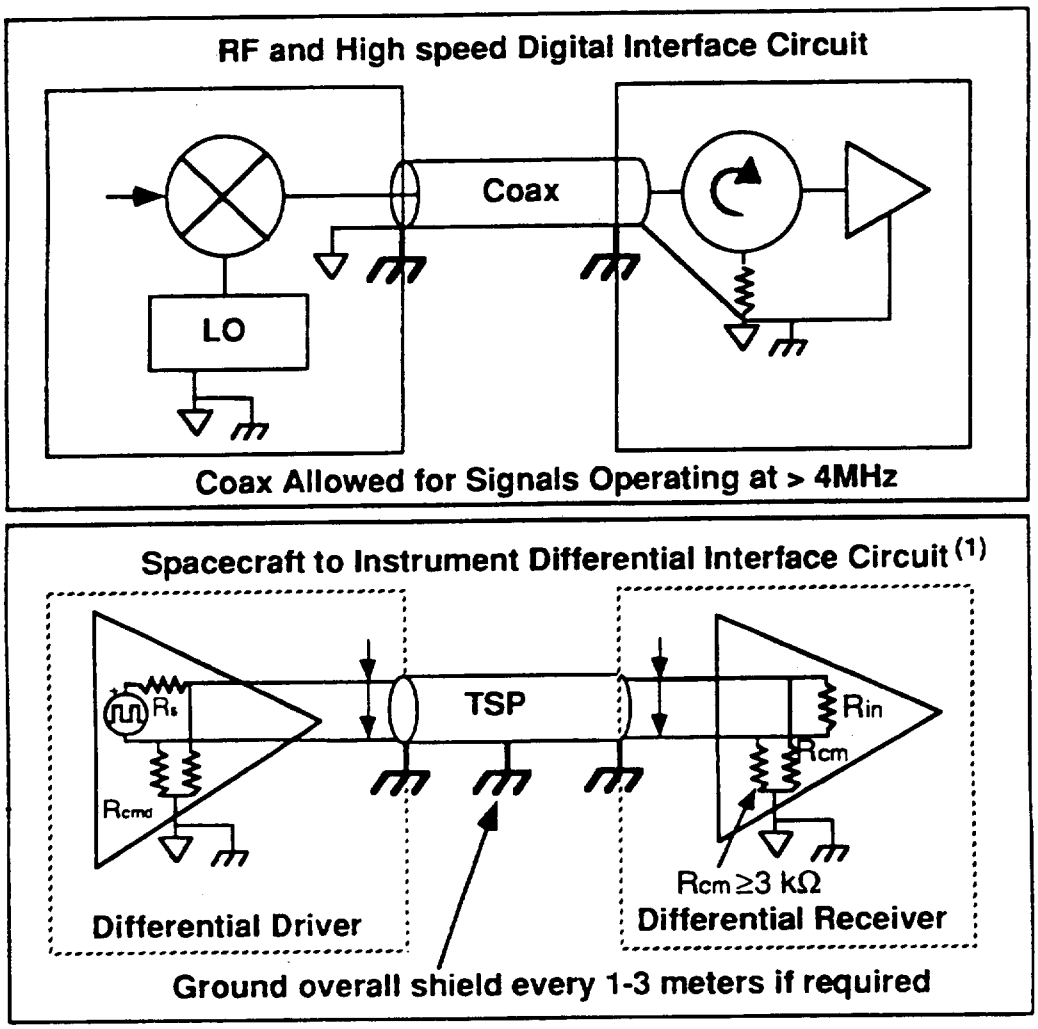

(1) This circuit is RS422 compatible.

Figure 30. Interface Signal Grounding

5.11.6 Fault Wire Grounding

The Spacecraft will implement a fault wire grounding system per Figure 27.

The Spacecraft will route a fault ground lead in each prime power cable.

The Spacecraft will bond the fault ground lead to the prime power reference at the PDU.

The Spacecraft will bond the fault ground lead to the Signal Reference Plane at the instrument–to–Spacecraft interconnection.

The instrument shall route a fault ground lead to each prime powered component and bond it to the component chassis.

5.12 Interface Wiring and Harnessing

The harness between Spacecraft and instruments will comply with the requirements as specified below.

The Spacecraft wiring will be designed in accordance with NASA NHB 5300.4 (3G, 3H) and Table XIV. The GIIS and the EMC Design Handbook shall be used as a reference for definitions of signal types.

5.13 Requirement Deleted

5.14 Requirement Deleted

5.15 Instrument Ground Support Equipment EMC Requirements

Instrument Ground Support Equipment EMC requirements are as follows.

All Instrument GSE shall be designed to best commercial practices with the following exception:

a. Instrument GSE which is powered during Instrument EMC testing and cannot be located outside the test chamber shall meet the Instrument requirements for RE02, RE04, RS01, and RS03 (external equipment). This requirement is also applicable to all interface cables which connect to the Instrument.

b. Instrument GSE which provides primary electrical power to an Instrument shall not exceed the conducted emissions and/or ripple and noise limits allocated to that Instrument GSE in the applicable performance specification.

Table XIV. Wire Design Requirements

Group Designation	Spacecraft Signal Type	Wire Type	Minimum Shielding	Shield Termination
Ia	120 VDC Power	Twisted conductor	OBS	360° @ Backshell
Ib	Secondary Power (<40 V)	Twisted conductor	OBS	360° @ Backshell
IIIa	Analog TLM, Active	Twisted Pair	OBS	360° @ Backshell
IIIb	Analog TLM, Passive	Twisted Pair*	OBS	360° @ Backshell
Ic	Relay Drive Commands	TC (1 Rtn/8 leads with > 2/box)	OBS	360° @ Backshell
Ic	Logic Level Commands	Twisted Pair	OBS	360° @ Backshell
IIIc	Bi-level TLM, Passive	Twisted Pair*	OBS	360° @ Backshell
IIb	Bi-level TLM, Active	Twisted Pair	OBS	360° @ Backshell
Vc	Time Mark and Freq. Bus	Twinax, Gore CXN2207	2S	360° @ Triaxial Conn.
Vb	Command and TLM Bus	Twinax, Raychem 7724C8664	3S	360° @ 360° Triaxial Conn.
Vb	Science Data (Low Rate)	Twinax, Raychem 7724C8664	3S	360° @ 360° Triaxial Conn.
IIId	Science Data (High Rate)	Dual Gore G2 Coax	2S Foil/Braid	360° @ SMA Conn.
Va	RF/μWave	Coax/waveguide	2S Foil/Braid	360° @ SMA Conn.
IV	EED (Pyro)	1STP	Wrap bundle	360° @ Backshell

Notes:

OBS = Overall bundle shield; **TC** = Twisted conductor **Coax** = Coaxial cable; **Twinax** = Controlled impedance twisted shielded pair; **1S** = Single shield; **2S** = Double shield; **3S** = Triple shield; **TLM** = Telemetry; * = May be shielded based on location; **Conn.** = Connector

The Spacecraft design shall provide wire segregation, routing, shielding and shield termination. A 30 mm separation distance between bundled cables is suggested to reduce mutual coupling between shield currents. The EMC Design Handbook and GIIS should be used as a reference for definitions of signal types.

Group designations defined in MIL-W-83575A.

6 EQUIPMENT/SUBSYSTEMS EMI REQUIREMENTS

6.1 Equipment Radiated Emissions (RE02, RE04)

Spacecraft equipment, subsystems and components shall not radiate broadband or narrowband electric fields in excess of the limits given in Figure 31.

Spacecraft equipment, subsystems and components shall limit magnetic field emissions to within the limits specified in Figure 32 measured at 1 meter.

6.2 Equipment Conducted Emissions

Spacecraft equipment, subsystems and components (except Power subsystem) shall limit prime power conducted emissions to levels less than or equal to those shown in Figure 33.

Spacecraft equipment, subsystems and components (except Power subsystem) shall limit prime power common mode conducted emissions to levels less than or equal to those shown in Figure 34.

Repetitive spikes shall meet the conducted emission requirements for CW signals.

6.2.1 Prime Power Subsystem Power Quality, Self Generated Ripple and Noise

The Spacecraft Prime power subsystem self–generated conducted ripple and noise shall be limited to less than the levels in Figure 35 when measured at the power distribution unit (PDU). This requirement is to be verified by time domain measurements. Test measurement details will be described in separate power subsystem test documents.

6.2.2 Secondary Power Users Reflected Ripple and Noise

Secondary power users (28 VDC) shall limit the generation of reflected ripple and noise to less than the levels in Figure 36 when measured at the Secondary Power Users Interface Connector. This requirement is to be verified by time domain measurements. Test measurement details will be described in separate test documents.

6.3 Radiated Susceptibility and Definition of Susceptibility Criteria

The susceptibility criteria for Spacecraft equipment has been divided into three categories. These categories are survive, operate and perform and are defined as follows.

a. Survival is defined as the ability to withstand the applied environment without any permanent loss of performance capability. Survival is required for both powered and unpowered states.

b. Operate is defined as the Spacecraft equipments ability to withstand the applied environment without malfunction, loss of capability, change of operation state/mode, memory changes or need for outside intervention. Operate requires that the survival criteria be met.

c. Perform is the ability of Spacecraft equipment to meet its specified performance. Perform requires that the Operate criteria be met.

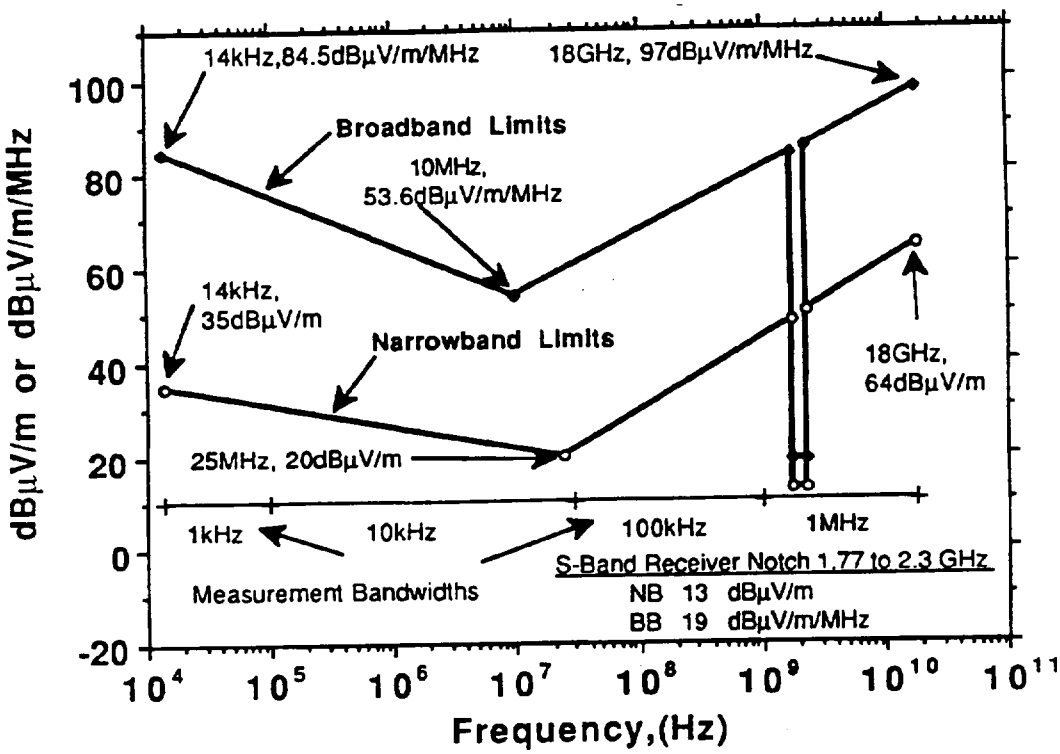

Figure 31. Equipment Radiated Electric Field Emissions Limits (RE02)

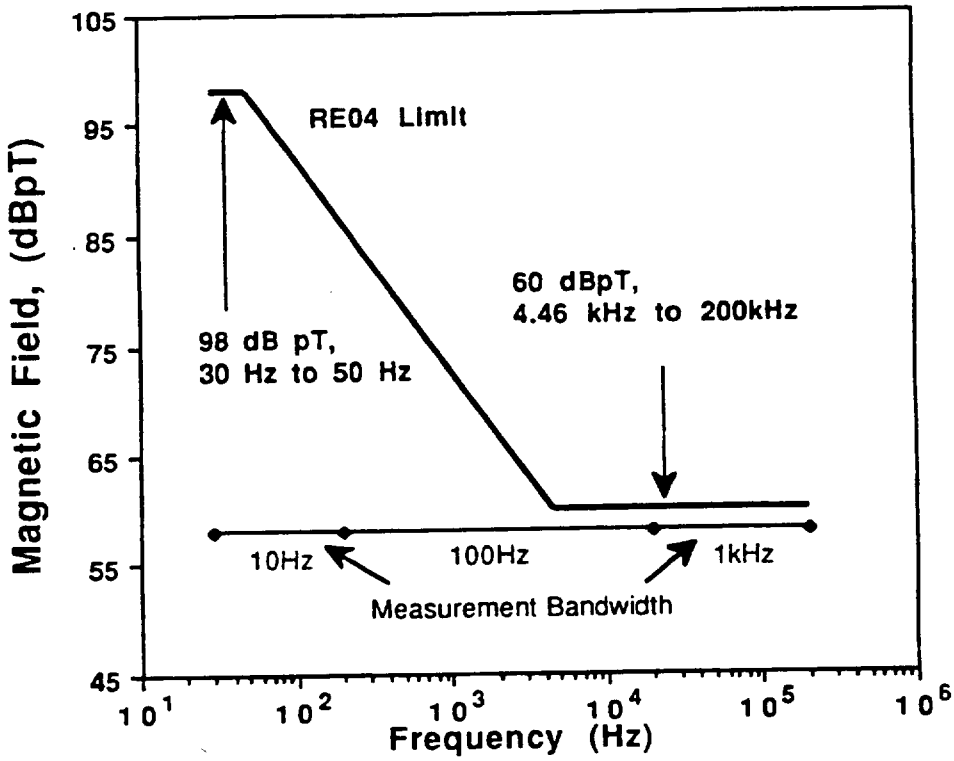

Figure 32. Equipment Radiated Magnetic Field Emissions Limit (RE04)

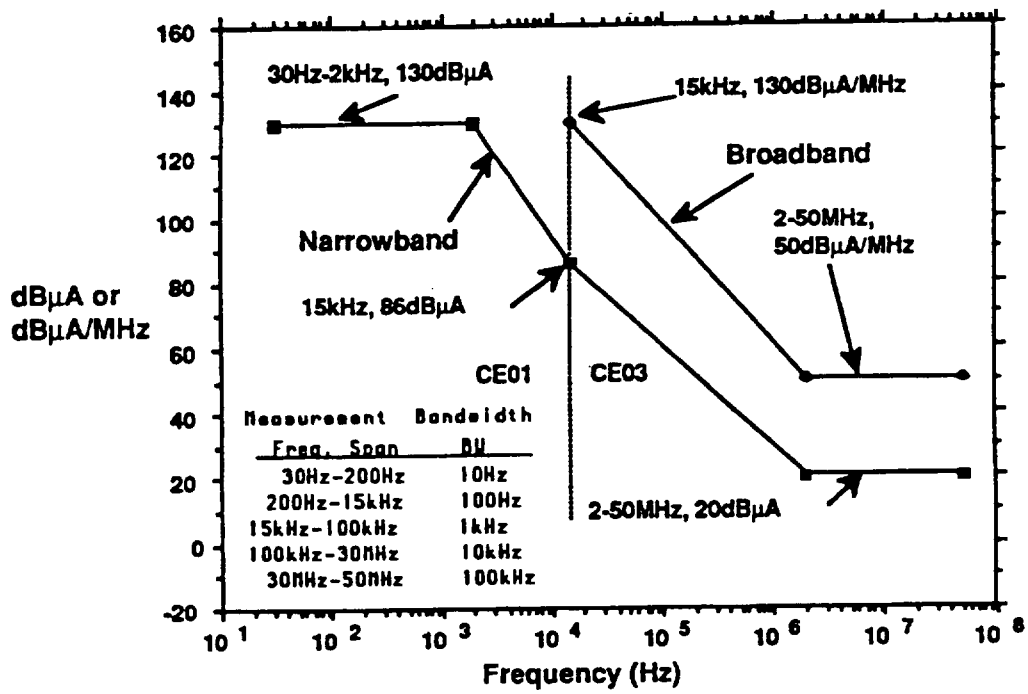

Figure 33. Equipment Conducted Emissions Limits

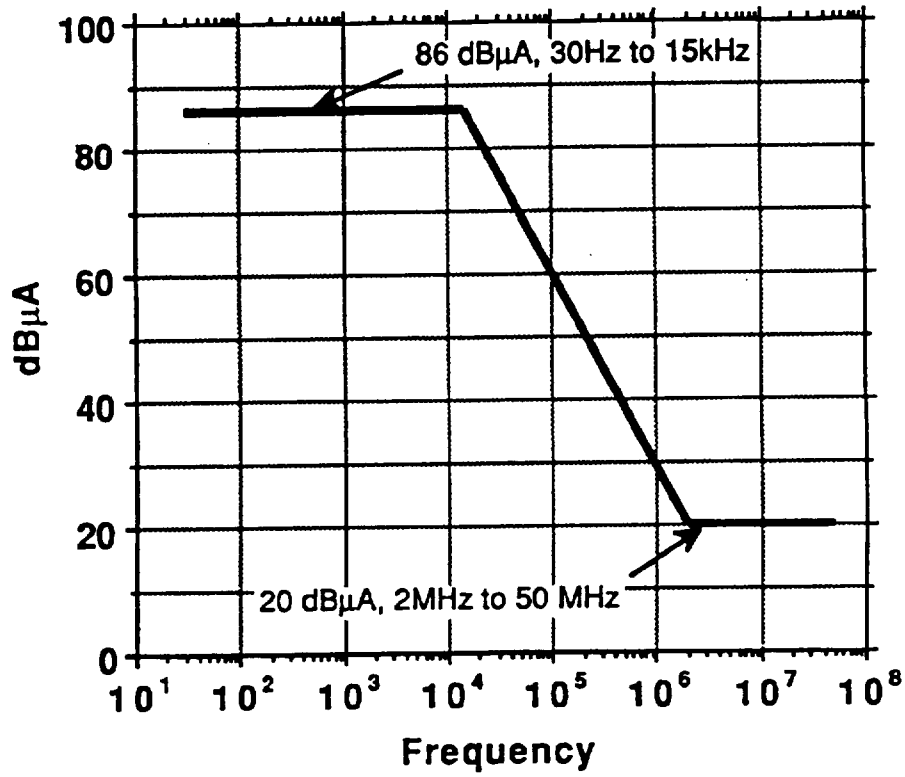

Figure 34. Equipment Common Mode Conducted Emissions Limit

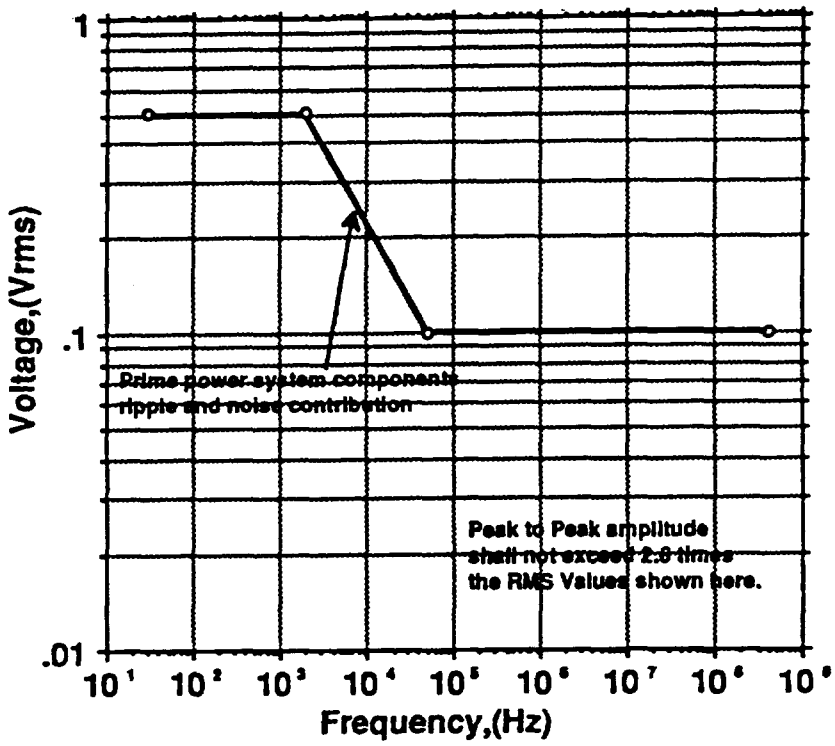

Figure 35. Prime Power System Power Quality, Self–Generated Ripple and Noise Limit

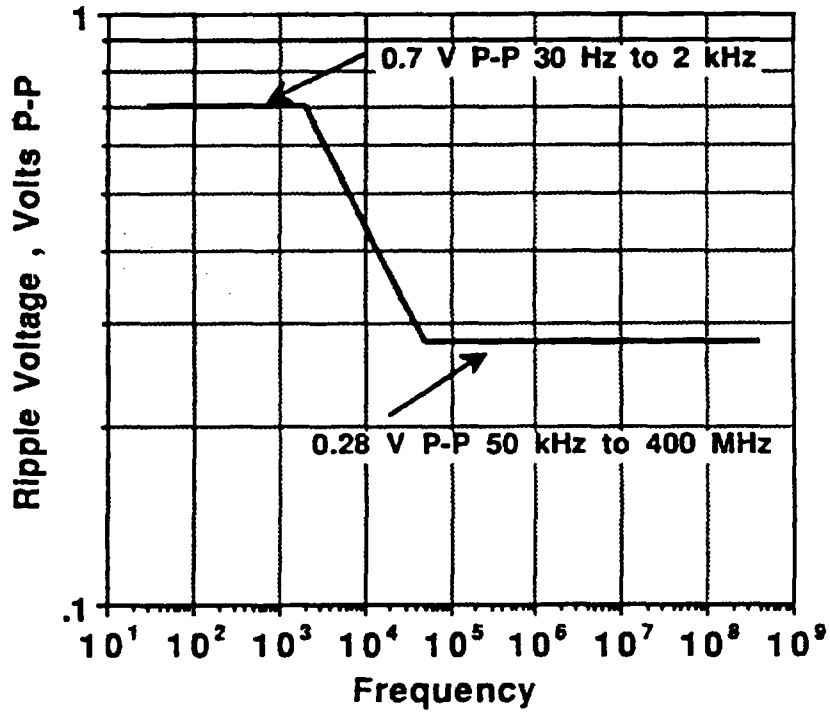

Figure 36. 28 V Distributed Secondary Power Users Reflected Ripple and Noise Limit ▮

The applicability of the above performance criteria versus the applied Environmental levels for the Spacecraft equipments is detailed in Table XV.

Table XV. Equipment Susceptibility Requirements

Test	Spacecraft Equipment		
	Survive	Operate	Perform(5)
CS01	Y	Y	Y
CS02	Y	Y	Y
CS06	Y(8)	Y	Y
CS03	Y	Y	Y
CS04	Y	Y	Y
CS05	Y	Y	Y
RS01	Y	Y	Y
RS03(1)	Y(6,4)	Y(6,4)	Y(6,4)
RS03(2) (Internal Equipment)	Y(4)	Y(4)	Y(4)
RS03(3) (External Equipment)	Y	Y	Y
Magnetic Properties(7)	Y	Y	Y

Y = Applicable
N = Not Applicable
D = Degraded Sensitivity, Test Plan shall specify limits

(1) Composite of normal checkout, Atlas, Titan, and launch susceptibility levels (Figure 39)
(2) Internal equipment susceptibility levels (Figure 37)
(3) External equipment susceptibility levels (Figure 38)
(4) By analysis or test
(5) Definition of susceptibility (i.e., criteria for performance defined in test plan)
(6) Launch environment reduced by equipment module shielding where applicable
(7) Immunity to Spacecraft and Earth generated magnetic fields, Box level test
(8) The CS06 Survive levels are **(TBR–1)**

6.3.1 Equipment Electric Fields Radiated Susceptibility Limit (RS03)

The internally mounted Spacecraft equipment/subsystems and components shall perform when subjected to the susceptibility environments specified in Figure 37.

Externally mounted Spacecraft equipment, subsystems and components shall perform when subjected to the susceptibility environments specified in Figure 38.

Spacecraft externally mounted equipment and core harness necessary for launch shall perform when subjected to electrical fields over the range of frequencies and levels specified in Figure 39 Figure 39 is the applied maximum level of the WSMC launch environment and the launch vehicle generated environment.

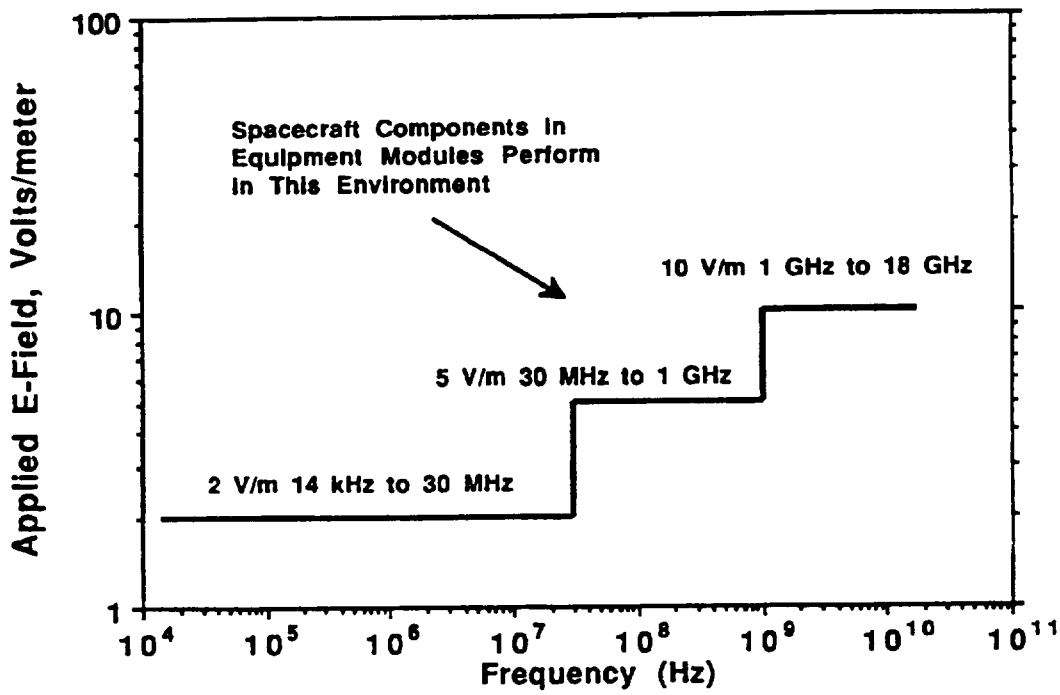

Figure 37. Internal Equipment Radiated Electric Field Susceptibility Requirement (RS03)

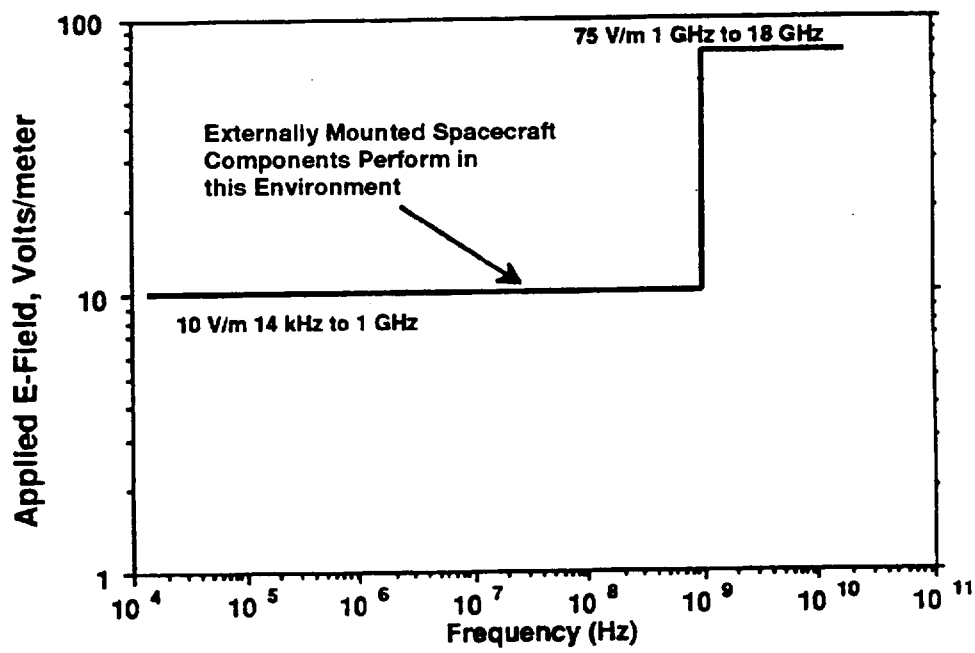

Figure 38. External Equipment Radiated Electric Field Susceptibility Requirement (RS03)

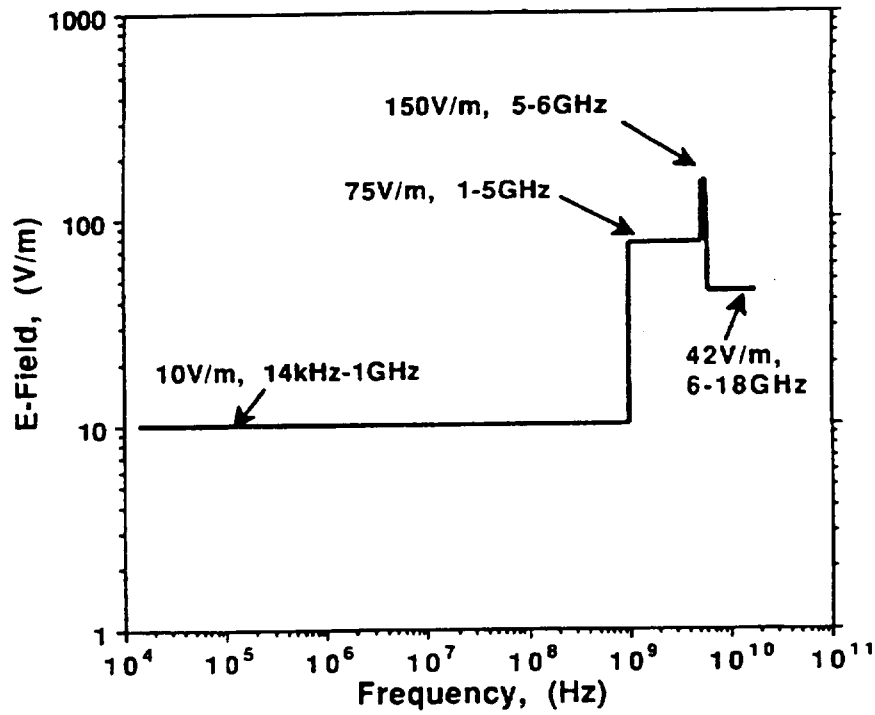

Figure 39. Launch Radiated Electric Field Susceptibility Requirement (RS03)

6.3.2 Radiated Susceptibility, Magnetic Fields (RS01)

The Spacecraft equipment, subsystems and components shall perform when subjected to the AC magnetic fields specified in Figure 40 and the Spacecraft magnetic field requirement of Figure 41.

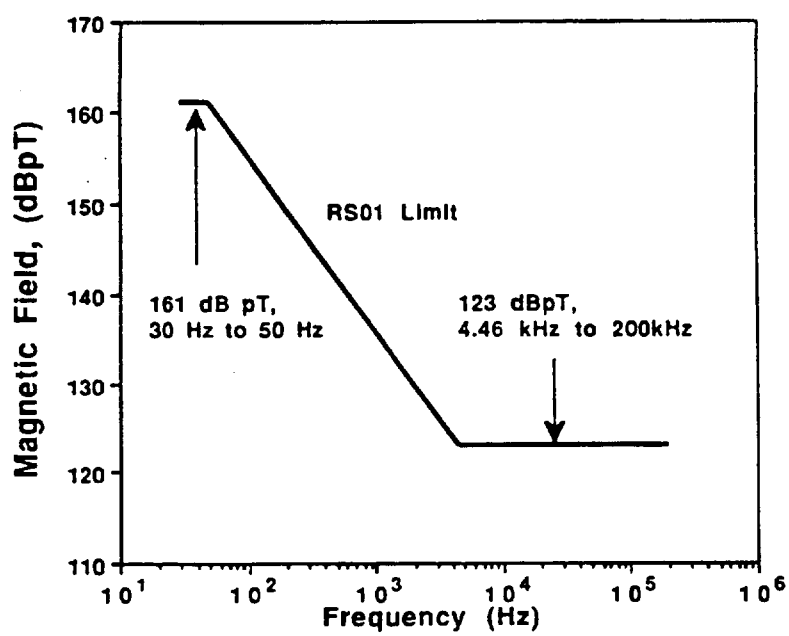

Figure 40. Equipment Radiated Magnetic Field Susceptibility Requirement (RS01)

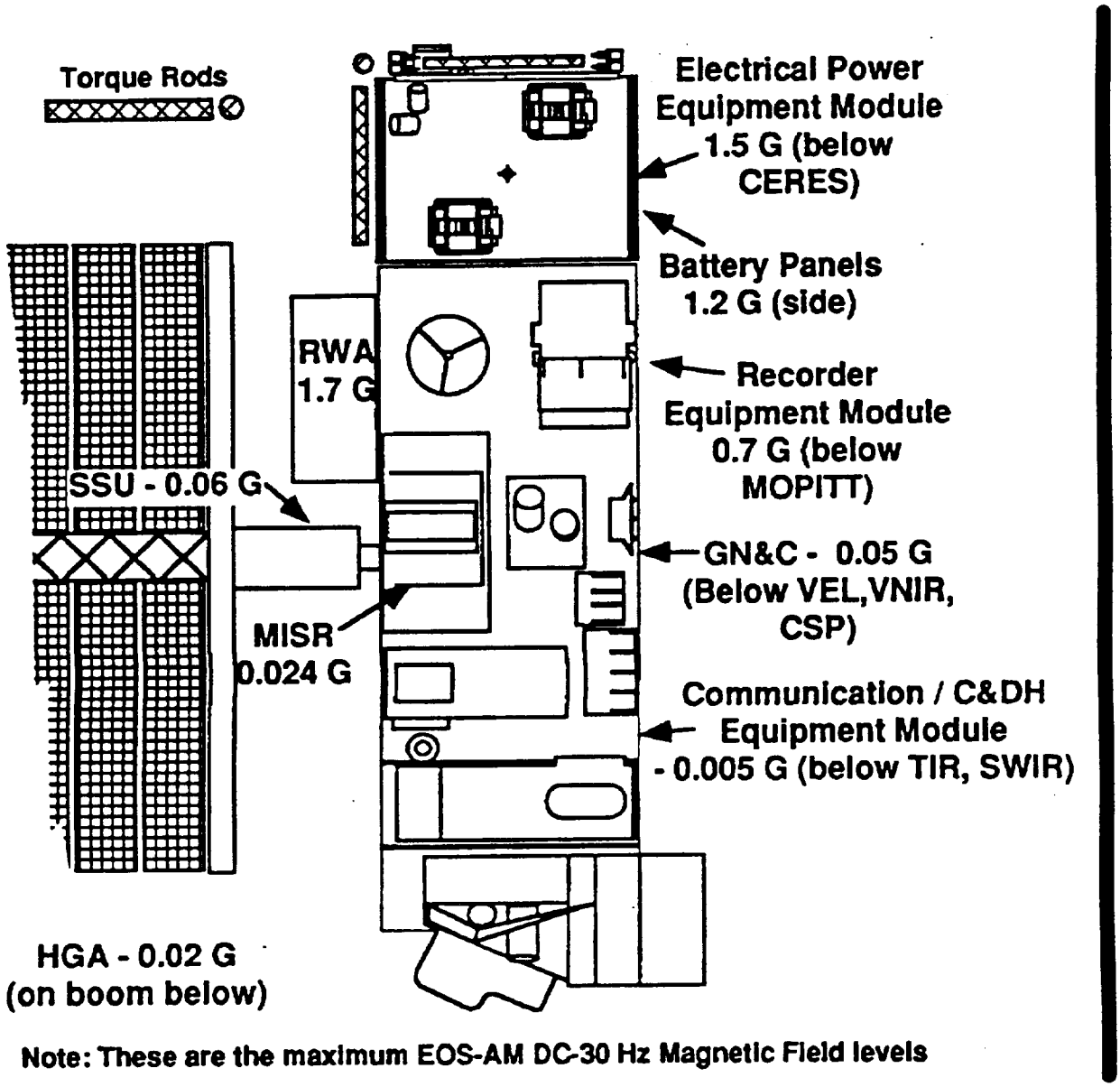

Figure 41. Spacecraft Torquer Rod Magnetic Fields

The Spacecraft equipments critical and necessary for launch shall perform during exposure to a 10 Gauss (1,000 μT) Static Magnetic field. Figure 41 shows the estimate of worst case magnetic fields at various locations on the Spacecraft produced by the magnetic torque rods.

All Spacecraft equipment shall operate in the magnetic field levels shown at the various locations in Figure 41. The magnetic fields will be updated as more information becomes available and will be incorporated into this document via a Engineering Change Notice (ECN) process.

6.3.3 Not Used

6.3.4 Communication Equipment Susceptibility Requirements/Definition of Susceptibility

The Spacecraft Communication Equipment shall meet the requirements of paragraph 6.3.1 except where radiated energy is induced directly in the operating band of the equipment. Under these conditions no damage or permanent loss performance shall result from the susceptibility environment of Figure 39.

6.4 Conducted Susceptibility (CS01, CS02, CS06)

Prime powered Spacecraft components, equipment and subsystems shall perform when subjected to conducted sinewave and pulse noise (CS01/CS02) injected on the primary power bus input per Figure 42.

Prime powered Spacecraft components, equipment and subsystems shall perform when subjected to transient noise (CS06) injected on the primary power bus per Figure 43.

Prime powered Spacecraft components, equipment and subsystems shall survive when subjected to transient noise (CS06 – Survive) injected on the primary power input per Figure 44.

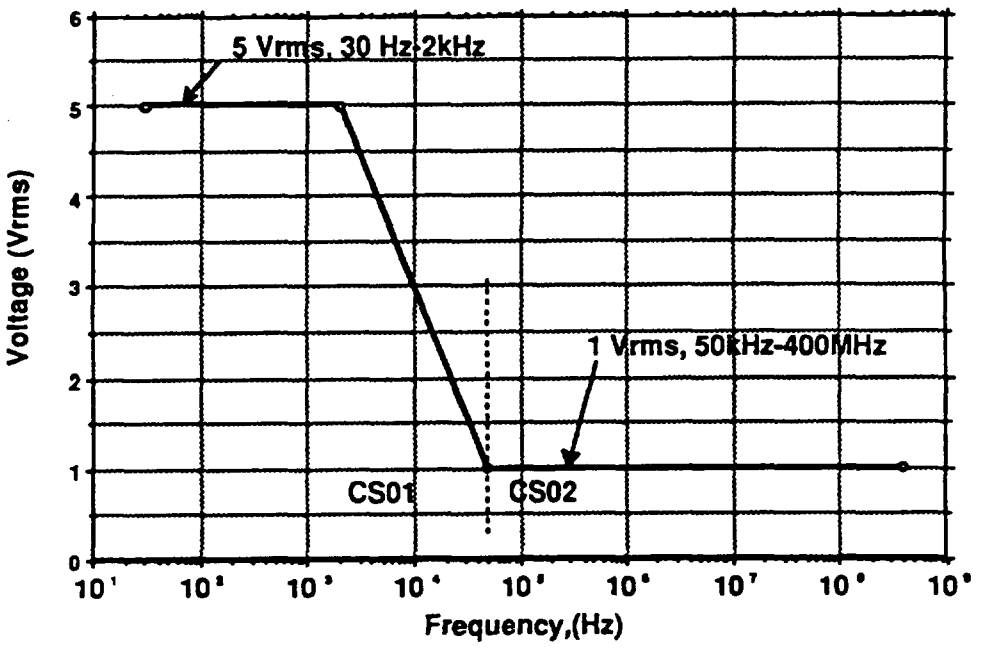

Figure 42. Conducted Susceptibility Requirement (CS01/CS02)

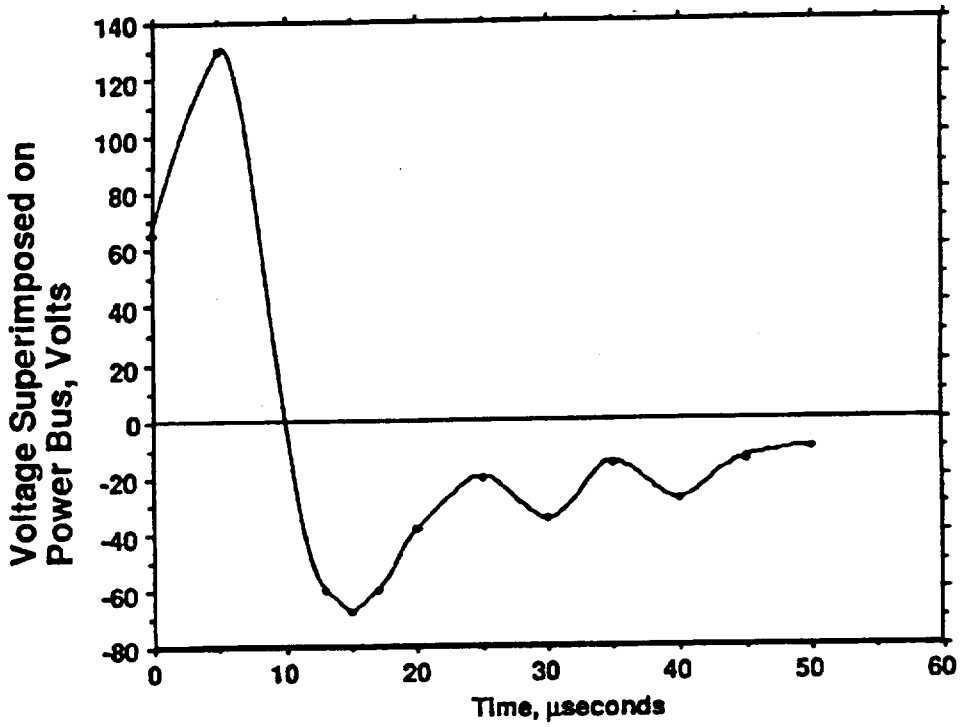

Figure 43. Equipment Conducted Transient Susceptibility Requirement (CS06 – Operate)

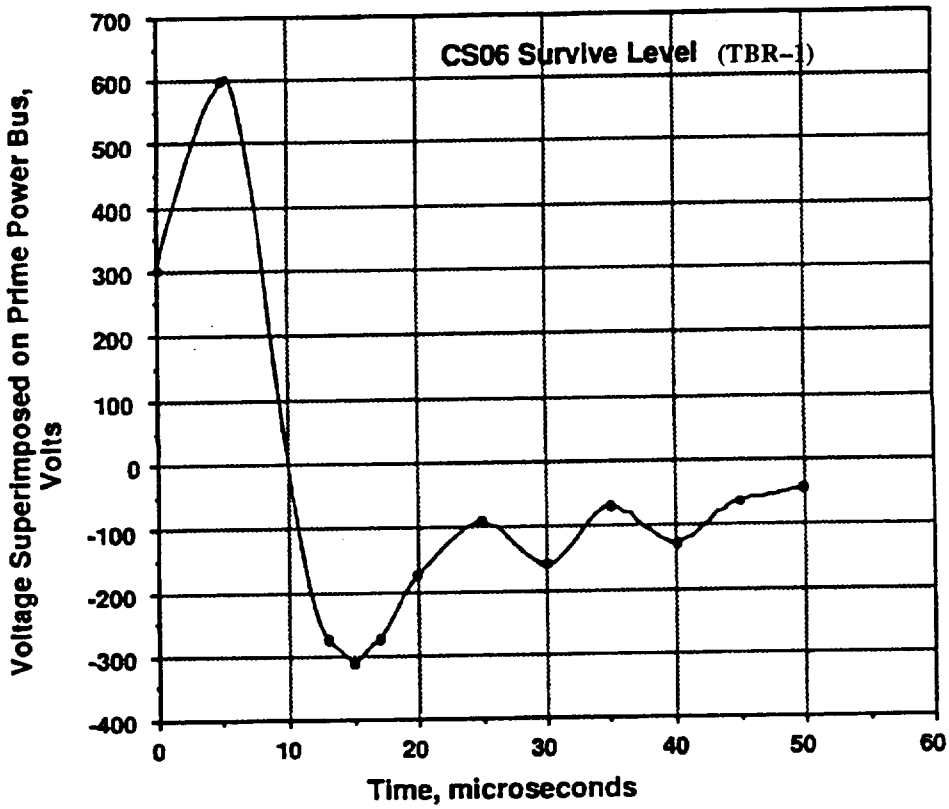

Figure 44. Equipment Conducted Transient Susceptibility Requirement (CS06 – Survive)

Prime powered Spacecraft components, equipment and subsystems which must operate through all safe modes shall operate when subjected to transient noise (CS06 – Survive) injected on the primary power bus per Figure 44.

Equipment powered from secondary voltages greater than 23 volts shall perform when sinewave and transient noise scaled to the ratio of secondary voltage divided by the primary voltage is applied to their power input. The minimum applied voltage shall not be less than 2.8 Volts peak to peak.

Equipment powered from secondary voltages less than 23 volts shall perform when sinewave and transient noise scaled to the ratio of secondary voltage divided by the primary voltage is applied to their power input.

Equipment which is powered by a dedicated Electric Power Conditioner (EPC) is exempted from the scaled requirement if qualified together as a unit.

6.5 Not Used

6.6 Deployment EED Design

The Spacecraft design shall provide protection from premature deployment of electro–explosive devices (EEDs) in accordance with MIL–STD–1576A.

6.7 Equipment Magnetic Properties

Spacecraft equipment, except torque rods, static dipole moment shall not exceed 0.3 Am^2 initially and shall not exceed 0.3 Am^2 after torque rod activity. Torque Rods shall be designed to limit residual static dipole moment to 5 Am^2.

6.8 Electromagnetic Interference Safety Margin

The Electromagnetic Interference Safety Margin (EMISM) for safety critical circuits (such as EEDs) shall be 20 dB, verified by analysis or test. EMISM for other EMC elements shall be 6 dB, verified by comparison of emissions and susceptibility test data.

6.9 Superposition

The radiated and conducted susceptibility requirements will be superimposed on the system critical circuit under investigation to establish the EMISM. This requirement shall be verified by analysis of equipment EMI test data.

6.10 Equipment Bonding

The Spacecraft equipment shall conform to the requirements as specified in paragraph 4.10.

6.10.1 Connector and Shield Bonding

The Spacecraft equipment shall conform to the requirements as specified in paragraph 4.10.1.

6.11 Equipment Grounding, References, and Isolation

The Spacecraft equipment shall conform to the requirements as specified in paragraph 4.11.

6.12 Equipment Interface Wiring and Harnessing

The Spacecraft Harness shall comply with the requirements in Sections 4.10, 4.11, and 4.12.

Wiring for circuits internal to the equipment module shall not degrade the electromagnetic environment and shall be designed for EMC within the equipment module.

6.13 Antenna Port Conducted Emissions (CE06)

The Spacecraft receiver and transmitter subsystems shall limit antenna port conducted emissions to the levels specified below. The emissions limits apply at the coax or waveguide port that connects to each antenna after subsystem components such as diplexers, isolators, or couplers and includes signal transmission line sections.

The Spacecraft S–band Omni receiver and transmitter subsystems shall limit antenna port conducted emissions to the levels specified in Figure 45. The Spacecraft Ku–band HGA transmitter subsystem shall limit antenna port conducted emissions to the levels specified in Figure 46. The Spacecraft S–band HGA receiver and transmitter subsystems shall limit antenna port conducted emissions to the levels specified in Figure 47. The DAS X–band Omni transmitter subsystem shall limit antenna port conducted emissions to the levels specified in Figure 48.

6.14 Receiver Antenna Port Conducted Susceptibility Requirements (CS03, CS04, CS05)

The Spacecraft S–band transponder shall not respond or exhibit degraded performance by intermodulation, front–end rejection, or cross–modulation when subjected to the CS03, CS04 and CS05 methods in MIL–STD–461C.

The DAS requirement level for CS04 is shown in Figure 49 for X–band.

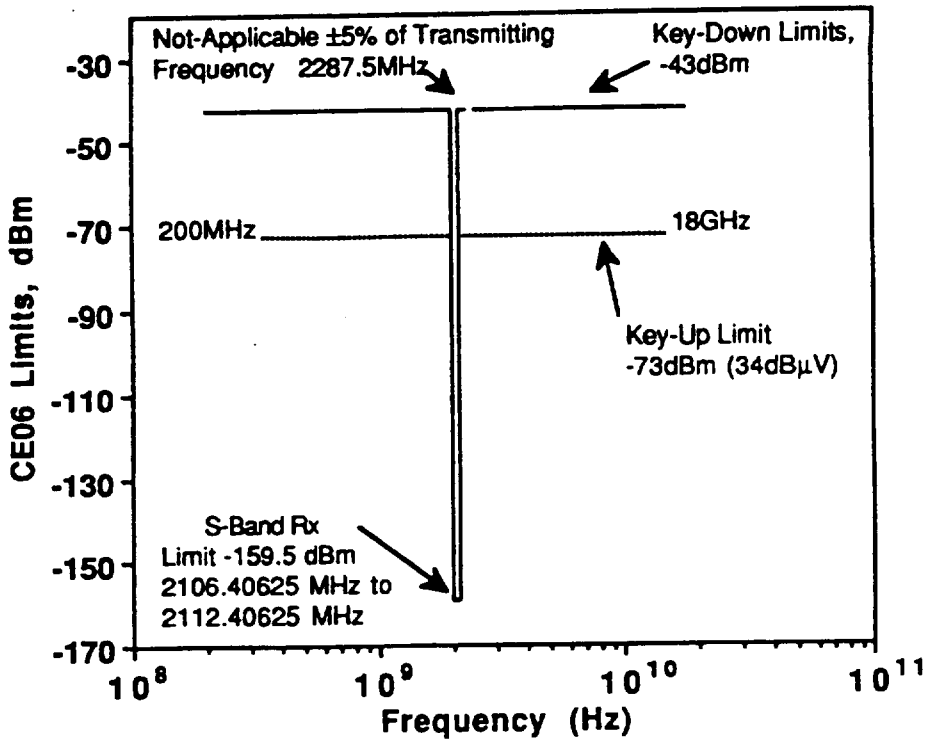

Figure 45. S–Band Omni CE06 Limits

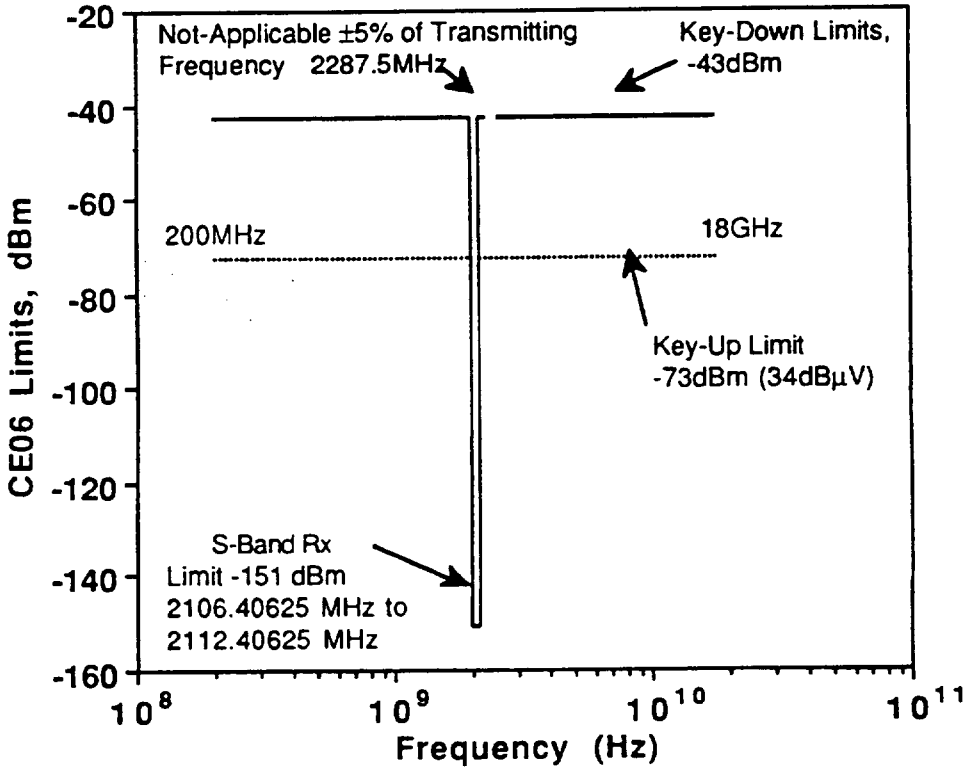

Figure 46. S–Band HGA CE06 Limits

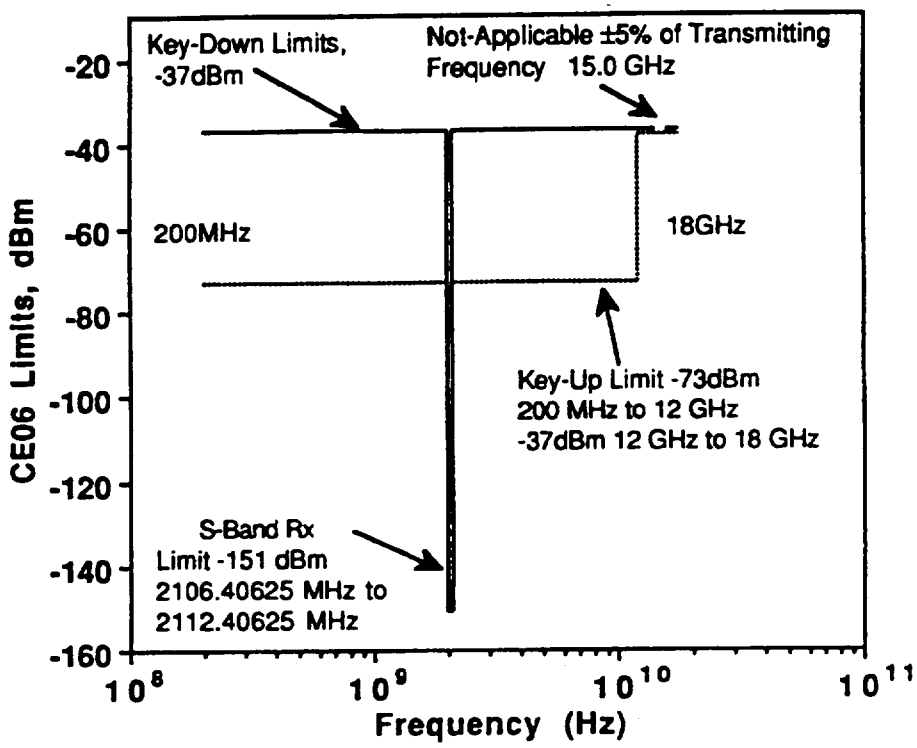

Figure 47. Ku–Band HGA Antenna Port Conducted Emissions Limits (CE06)

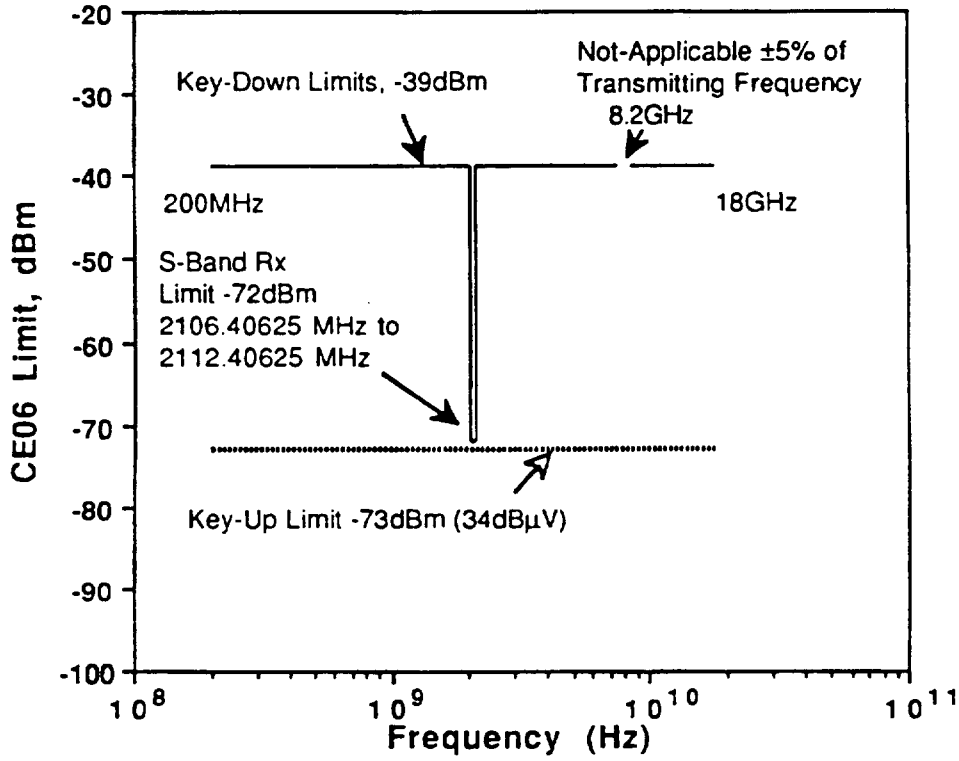

Figure 48. DAS Antenna Port Emissions Limit

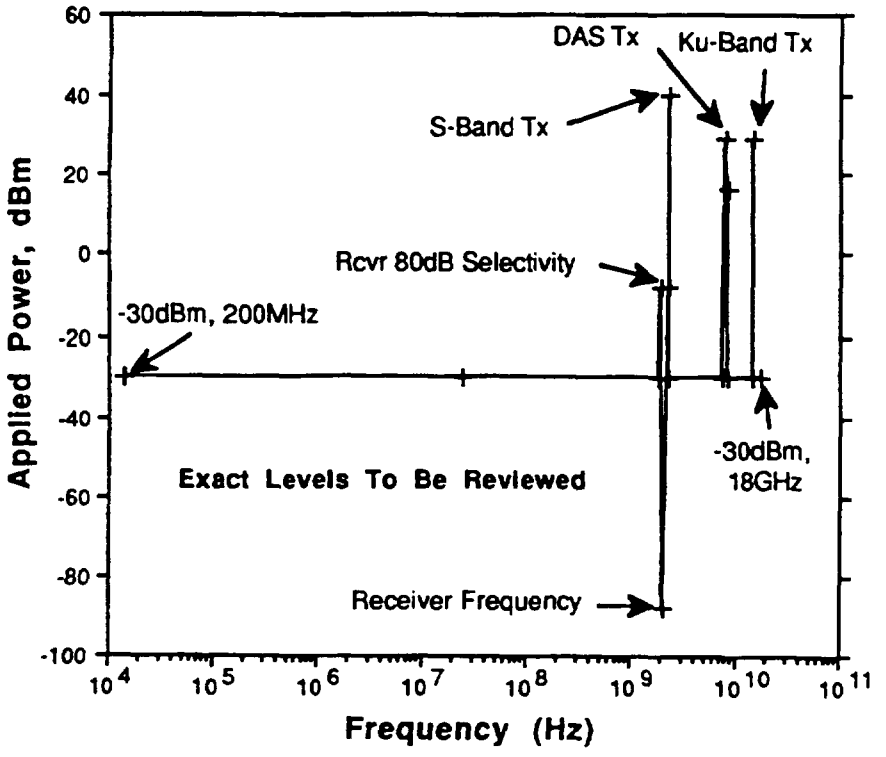

Figure 49. S–Band Antenna Port Conducted Susceptibility Levels (CS04)

(This page intentionally left blank.)

7 ELECTRICAL GROUND SUPPORT EQUIPMENT (EGSE)

Electrical Ground Support Equipment EMC requirements are as follows.

All EGSE shall be designed to best commercial practices with the following exceptions:

a. EGSE which is powered during Spacecraft EMC testing and cannot be located at least 60 feet away shall meet the Spacecraft requirements for RE02, RE04, RS01, and RS03 (external equipment). This requirement is also applicable to all interface cables which connect to the Spacecraft.

b. EGSE physically located on the Mobile Service Tower shall be designed to meet the requirements of MIL–STD–461C part 3 for class A2b with the following relaxation. LCD and CRT type displays shall not be permanently degraded by the application of RS02 test signals and shall resume normal operation after removal of applied test signals.

c. EGSE which provides primary electrical power to flight hardware shall not exceed the conducted emissions and/or ripple and noise limits defined in the EMC Control Plan, PN20005869, and specified for the EGSE in the applicable requirements documents.

(This page intentionally left blank.)

8 EMC MANAGEMENT

The organizational steps necessary to provide system Electromagnetic Compatibility (EMC) design are accomplished by implementing Electromagnetic Interference (EMI) Control, EMC design support, periodic EMC design reviews, EMC verification and documentation, EMI problem resolution. These topics and the EMC task schedule are discussed in the following paragraphs.

8.1 Organization

In order to ensure proper EMC control of the Spacecraft program, the Spacecraft Engineering Program Manager, as the direct representative of the Spacecraft Program Manager, has primary responsibility for assuring implementation of the appropriate EMC controls in the design of the system. The Engineering Program Manager gives technical direction for this work to EMC engineers and to the other program participants as shown in the subsections below.

The Engineering Program Manager establishes and maintains a direct line of communications between Package Engineering, the Program Management, the System Development engineers, and the subcontractors or vendors for coordinating EMI/EMC activities. Figure 50 shows the functional organizational flow for the Spacecraft Program EMC Control.

The Spacecraft Electromagnetic Compatibility Advisory Board (EMCAB) is a formal assembly of GSFC, Martin Marietta, instrument and subsystem designers. The purpose of the board is to resolve conflicts between this document and any Spacecraft equipment/instrument, make final recommendations as to waiver requests, and determine EMC requirements for the Spacecraft program. The Board is chaired by GSFC Code 421 with primary participation by Martin Marietta as the prime contractor.

8.1.1 EMC Engineering

The EMC Engineering organization will perform the following functions.

a. Prepare and maintain the EMC Control and Test Plans.

b. Perform analytical studies for requirement derivation, limit adjustment, and EMC margin prediction.

c. Monitor and sign off specs and drawings to assure EMC control implementation.

d. Review EMI/EMC capabilities of GFE, vendor, subcontractor equipment.

e. Support EMI/EMC related technical inputs for use in preparation of specifications, work statements, and procurement documents.

f. Evaluate interface EMC design at associated equipment interfaces.

g. Participate in the Spacecraft Electromagnetic Compatibility Advisory Board (EMCAB).

h. Inform GSFC, Code 421, of EMI/EMC status and design issues which impact payload performance.

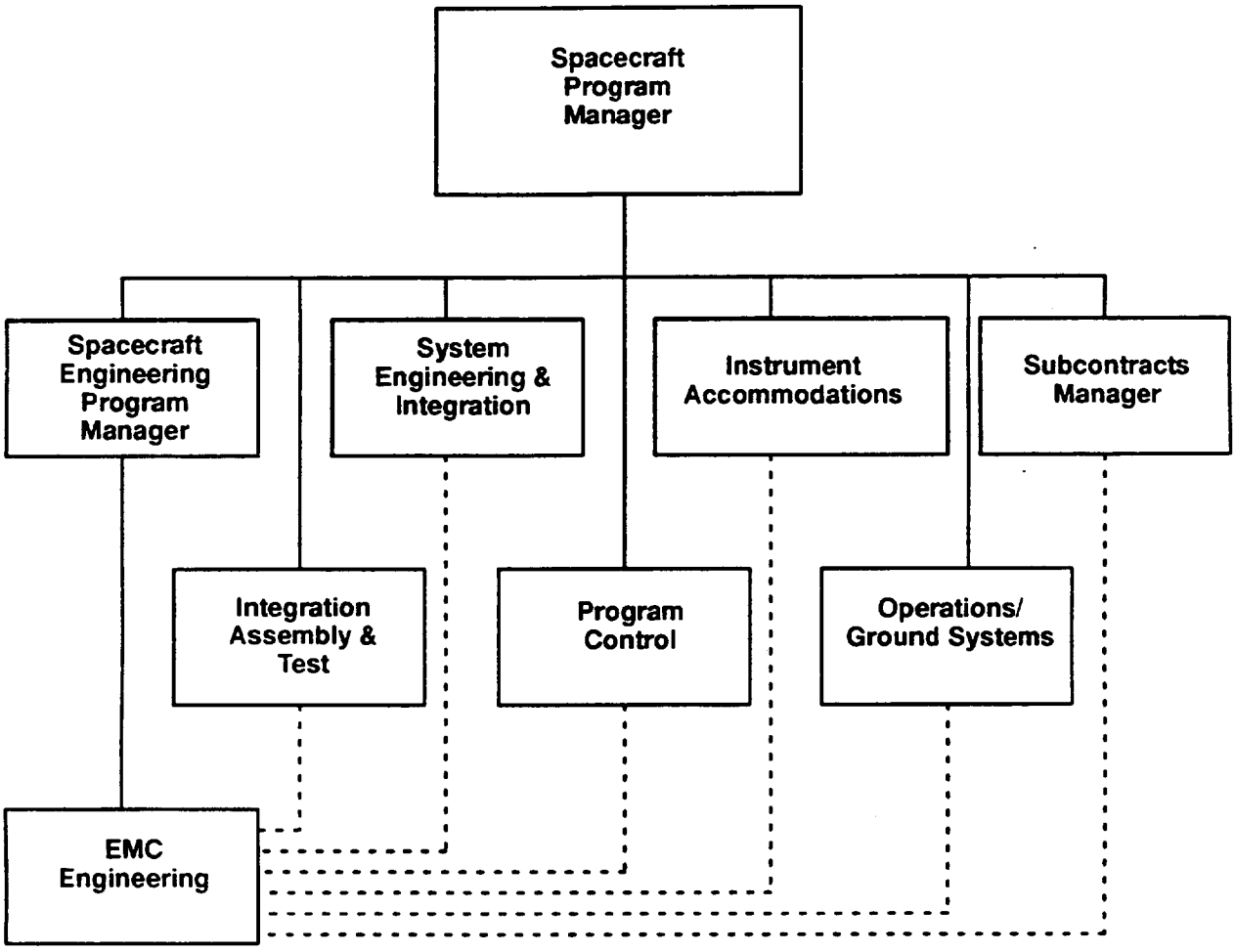

Figure 50. EMC Control Flow Diagram

8.1.2 Systems Engineering and Integration

EMC Engineering will be responsible for providing the EMC requirements for the instruments on the Spacecraft. EMC Engineering shall aid in system design and system compliance and provide requirements definitions for systems engineering and the customer as necessary.

8.1.3 Hardware Engineering, Systems Development, and IA&T

Systems Development and Hardware Engineering are responsible for compliance with EMC requirements for hardware. The EMC group will work closely with Hardware Engineering to interpret these requirements, make design recommendations and prepare test plans.

Product Assurance will audit design and test documentation of the equipment to EMI/EMC requirements in accordance with the EOS–AM Product Assurance Program Plan (PN20005397). Integration and Test (I&T) will implement procedures and processes necessary to ensure that EMI/EMC design and qualification/acceptance verification requirements are incorporated during the assembly and integration of Spacecraft hardware.

8.1.4 Subcontractor Management

Subcontractors and Vendors are responsible for compliance to the flow down of EMC requirements for the design and development of Spacecraft hardware. The subcontractor manager is responsible for providing EMC requirements and controlling subcontractor EMC efforts. The EMC group will provide EMC requirements in the equipment specifications, audit subcontractor designs and test, review and approve EMC documentation. A copy of all relevant subcontractors and vendor EMC requirements will be submitted to NASA–GSFC for information purposes.

8.1.5 Operations and Ground Systems

Spacecraft Launch activity EMC efforts are the responsibility of the Operations and Ground Systems manager. EMC Engineering will provide inputs to interface documents and attend launch vehicle integration EMC critical meetings.

8.2 Equipment Considerations

The Spacecraft will utilize equipment which is GFE, Martin Marietta built or packaged, vendor supplied and subcontractor procured equipment. The EMI profile of the individual equipments, to the extent available, will be considered in the overall application of EMI control techniques to assure compatible operation.

8.2.1 GFE Equipment

GFE equipment will be evaluated for EMC within the Spacecraft EMC requirements. If potential GFE EMC design problems are discovered they shall be reported to the Government procuring officer as soon as possible. Suggested resolution plans will also be provided.

8.2.2 Martin Marietta Equipment Design

Martin Marietta designed equipment shall meet the Spacecraft requirements.

8.2.3 Subcontractor Supplied Equipment

Subcontractors will be responsible for EMC qualification of their equipment to the requirements in this document. Previously designed and built equipment may be qualified by comparing previous data to the Spacecraft EMC requirements. Martin Marietta EMC will review and approve the EMC design and qualification of subcontractor units.

8.2.4 Instrument Equipment

Instrument providers will be responsible for EMC qualification of their equipment. GSFC and Martin Marietta EMC will review the EMC design and qualification of instruments for compatibility with the EOS–AM Spacecraft. Conflicts between instrument requirements and this document will be reviewed by the Spacecraft Electromagnetic Compatibility Advisory Board.

8.3 Not Used

8.4 Program Documentation

8.4.1 EMC Control Plan Revision

The EMC Control Plan is designed to comply with Contract data requirements GSFC 421–10–01, as applicable, to ensure the Spacecraft EMC design capability. The EMC Control Plan is designed to comply with GFCS 421–10–01 requirements, as applicable. The Control Plan will conform to DI–EMCS–80199. It will be submitted for the PDR, and updated for CDR. The plan will be placed under configuration control and changes will be subject to review and approval by the EMC Manager, the Spacecraft Program Office, the Spacecraft Electromagnetic Compatibility Advisory Control Board, NASA, and GSFC.

8.4.2 EMC Test Plan

The EMC test plan will describe each level of EMC testing. The format and content of the test plan will be based on the Contract data requirements. The verification philosophy outlining the test method and data collection necessary for demonstrating compliance to the EMC requirements will be described in this plan.

8.4.3 EMC Test Report

An EMC test report will summarize the results of the Spacecraft program verification testing. The test report will conform to the requirements and format in the Contract data requirements. The test report will present the test results and an evaluation of the EMC test performance demonstrating the degree of compliance margin for the overall component and system level.

9 DEFINITIONS AND COMMONLY USED TERMS

9.1 Glossary

The following terms are defined to facilitate specification of the ground, return, reference and bonding requirements:

Bond:	A low–impedance electrical connection between two conductive elements
Bus Data Unit (BDU):	A Spacecraft to instrument support component which provides Point to Point command and telemetry interfaces
CE06:	Conducted Emissions, Antenna Terminals 10 kHz to 26 GHz
Chassis Reference:	The point within a component at which signal reference and secondary power return leads are referenced to the component chassis
Component:	A generic term used to describe independently packaged electronics
Chassis:	The metal enclosure which shields electronic circuits.
CS01:	Conducted Susceptibility, Power Leads, 30 Hz to 50 kHz
CS02:	Conducted Susceptibility, Power Leads, 0.05 to 400 MHz
CS03:	Conducted Susceptibility Antenna Port Intermodulation, 15 kHz to 10 GHz
CS04:	Conducted Susceptibility Antenna Port Rejection of Undesired Signals, 30 Hz to 20 GHz
CS05:	Conducted Susceptibility Antenna Port Cross–Modulation, 30 Hz to 20 GHz
CS06:	Conducted Susceptibility, Spikes, Power Leads
Instrument Chassis:	The metal enclosure which shields the instrument's electronics
Equipment:	A generic term used to describe independently packaged components and subsystems. A group of components which work together and whose operation is interrelated are also categorized as equipment.
Equipment Chassis:	The metal enclosure which shields the Equipment's electronics.
Fault Ground Wire:	An individual wire intended to carry fault currents in the event that the 120 Vdc input is short–circuited to the component chassis. This eliminates the need to rely on local ground planes and the Spacecraft Signal Reference Plane to carry fault current

Ground Plane:	The local electrically conductive surface to which a component is bonded
Instrument Ground Interconnection:	The electrically conductive surface or virtual ground point to which all instrument components and its accommodation equipment are bonded.
Intentional Emissions:	The signal or spectrum of emitted energy which is the fundamental purpose of operation. Example: The RF output of a Transmitter is an intentional emissions at the transmitting antenna, while leakage of the transmitter output from the case of the Transmitter is an Unintentional Emission. See Unintentional Emission.
Interface Connector Panel:	A Spacecraft harness connector bracket which is bonded to the Signal Reference Plane. It is used to provide grounding control and interface cable shield termination for an instrument and its BDUs or an equipment module.
Isolated Secondary Power:	A secondary power source whose loads are completely isolated from instrument to Spacecraft interface electronics
Electrical Power Conditioner:	A dc–to–dc converter used to derive low voltage power.
Primary Power Reference:	The point on the Spacecraft where all primary power returns are referenced. The Primary Power Reference is the reference point for Spacecraft voltage control.
Primary Power Return:	The isolated 120 V current return lead from the component primary power dc–to–dc converter input back to the Spacecraft primary power distribution point
RE02:	Radiated Emissions, Electric Field, 14 kHz to 10 GHz
RE04:	Radiated Emissions, Magnetic Field, 0.03 to 50 kHz (i.e., RE01 measured at 1 meter)
RF Signals:	RF Signals are those which require coaxial cable and connections. RF Signals typically have fundamental components above 4 MHz.
RS01:	Radiated Susceptibility, Magnetic Field, 0.03 to 50 kHz
RS03:	Radiated Susceptibility, Electric Field, 14 kHz to 40 GHz
Secondary Power:	Power which has been derived and isolated from primary power typically by a dc–to–dc converter, and used to power Spacecraft interface or other circuits

Secondary Power Reference:	The point within the component where all current returns from the secondary power circuits are referenced
Signal Reference:	The reference within the component for digital and analog signals.
Signal Reference Plane:	The Spacecraft conducting plate or other structure to which all ground planes are connected
Signal Return:	The wire which carries the current of a digital or analog signal back to its source
Unintentional Emissions:	The signal or spectrum of emitted energy which is a by–product of operation. Internally generated signals which are necessary for operation of a device but are not the specified and desired output are Unintentional Emissions. See Intentional Emissions.

9.2 Acronyms and Abbreviations

CE	Conducted Emission
CS	Conducted Susceptibility
ECAC	Electromagnetic Compatibility Analysis Center
EMC	Electromagnetic Compatibility
EMI	Electromagnetic Interference
EMISM	Electromagnetic Interference Safety Margin
EPC	Electrical Power Conditioner
PPR	Primary Power Reference
RE	Radiated Emission
RS	Radiated Susceptibility
SRP	Signal Reference Plane

20008662
CAGE No. 49671
06 May 1993

EOS–AM Spacecraft Flight Software System Requirements Specification (SD–110a)

Prepared under:
Contract NAS5–32500
NASA Goddard Space Flight Center
Greenbelt, Maryland 20771

Prepared by:
Martin Marietta Corporation
Astro Space
P.O. Box 800
Princeton, New Jersey 08543–0800

DCC050693

(This page intentionally left blank.)

REVISION LOG

This log identifies those portions of this document which have been revised since the original issue. Revised portions of each page, for the current revision only, are identified by marginal striping.

Revision	Paragraph Number(s) Affected	Rev. Date	Approval
Initial Issue		05/06/93	CM/GSR

(This page intentionally left blank.)

TABLE OF CONTENTS

SECTION / PARAGRAPH	TITLE	PAGE
1	INTRODUCTION	1
1.1	Scope	1
1.2	Objectives	1
1.3	Applicable Documents	1
1.4	Reference Documents	3
2	FLIGHT SOFTWARE SYSTEM DEFINITION	5
2.1	General Description	5
2.2	Organization and Structure	5
2.3	Operating Environment	7
3	FLIGHT SOFTWARE SYSTEM REQUIREMENTS	9
3.1	Contract End Item (CEI)–Imposed Software Requirements	9
3.1.1	EOS Data and Information System (EOSDIS) Interfaces	9
3.1.2	Spacecraft Processing Interfaces	9
3.1.3	EOS Ground System Test Support	9
3.1.4	Independent Instrument Operation	9
3.1.5	Commandability	9
3.1.5.1	Previous State Independence	9
3.1.5.2	State–Dependent Functionality	9
3.1.5.3	Single Command Recovery	9
3.1.5.4	Housekeeping Telemetry	10
3.1.5.4.1	Housekeeping Telemetry Data Content	10
3.1.5.4.2	On–Orbit Telemetry Redefinition	10
3.1.6	Attitude Determination and Control	10
3.1.6.1	Safe Mode	10
3.1.6.1.1	Autonomous Entry	10
3.1.6.1.2	Safe Mode Exit	10
3.1.7	Command and Data Handling	11
3.1.7.1	General	11

TABLE OF CONTENTS (Continued)

SECTION / PARAGRAPH	TITLE	PAGE
3.1.7.1.1	Spacecraft ConfigurationControl	11
3.1.7.1.2	Command Processing	11
3.1.7.1.2.1	Processing Data Rates	11
3.1.7.1.2.2	Real–Time Command Execution	11
3.1.7.1.2.3	Stored Command Processing	11
3.1.7.1.2.3.1	Absolute–Time Stored Commanding	11
3.1.7.1.2.3.2	Relative–Time Command Sequence (RTCS) Stored Commanding	11
3.1.7.1.2.3.3	Stored Command Inspection/Modification	12
3.1.8	Failure Detection/Correction	12
3.1.8.1	Failure Tolerance	12
3.1.8.1.1	Single Credible Hard Failure Tolerance	12
3.1.8.1.2	Containment	12
3.1.8.2	Failure Monitoring	12
3.1.8.2.1	Critical Failure Detectability	12
3.1.8.2.2	Health and Status checks	12
3.1.8.3	Failure Responses	13
3.1.8.3.1	General	13
3.1.8.3.1.1	Override	13
3.1.8.3.1.2	Not time–critical	13
3.1.8.4	Failure Detection	13
3.1.9	Software	13
3.1.9.1	General	13
3.1.9.1.1	Integrity and Revision Verification	13
3.1.9.1.2	Computer Program Implementation	13
3.1.9.2	Software Development	13
3.1.9.2.1	Development Documentation	13
3.1.9.2.2	Life Cycle	14
3.1.9.2.3	Programming Language	14
3.1.9.2.4	Flight Software Maximum Utilization	14
3.1.10	I&T Accommodations	15

TABLE OF CONTENTS (Continued)

SECTION / PARAGRAPH	TITLE	PAGE
3.1.10.1	General	15
3.1.10.1.1	Modularity	15
3.1.10.1.2	Standardization	15
3.1.10.1.3	Existing Ground Equipment Use	15
3.1.10.1.4	New Maintenance Equipment Use	15
3.1.10.1.5	Prelaunch Support	15
3.1.10.1.6	Verifiable Test Equipment	15
3.1.10.1.7	Test Equipment Calibration	15
3.1.11	Design and Construction	15
3.1.11.1	Safety Interlock Mechanisms/Techniques	15
3.1.12	Precedence	16
3.1.12.1	Precedence of Design Criteria	16
3.1.13	Subsystem and Major Assembly Requirements	16
3.1.13.1	General Subsystem Functions	16
3.1.13.2	Subsystem Failure Tolerance	16
3.1.14	General Subsystem Commands and Telemetry	16
3.1.14.1	Subsystem Commands	16
3.1.14.1.1	Function Override/Inhibit Commands	16
3.1.14.2	Subsystem Telemetry	16
3.1.14.2.1	Health and Safety Telemetry Content	16
3.1.14.2.2	Housekeeping Telemetry Content	17
3.1.14.3	General Subsystem Computer Programs	17
3.1.14.3.1	General Subsystem Interface Standardization	17
3.1.15	Flight Software System (FSWS)	17
3.1.15.1	FSWS General Functions	17
3.1.15.2	FSWS System Support Functions	17
3.1.15.3	FSWS Subsystem Support Functions	17
3.1.15.4	FSWS Telemetry Monitoring	18
3.1.15.5	FSWS Ancillary Data Support	18
3.1.15.6	FSWS Command and Memory Load Processing Rates	18

TABLE OF CONTENTS (Continued)

SECTION / PARAGRAPH	TITLE	PAGE
3.1.15.7	FSWS FDIR	18
3.1.15.8	FSWS Software Operating Environment	18
3.1.16	Quality Assurance Provisions	18
3.1.17	Operational Support	19
3.1.17.1	Absolute Time Command (ATC) Storage	19
3.1.17.2	Absolute Time Command Processing	19
3.1.17.3	Relative Time Sequences (RTS)	19
3.1.17.4	Telemetry Monitor (TMON)	20
3.1.17.5	Telemetry Reporting	20
3.1.17.6	Time Maintenance	21
3.1.17.7	Command and Data Handling	21
3.2	Subsystem–Imposed Software Requirements	21
3.2.1	Command and Data Handling Subsystem (C&DHS) Software Requirements	21
3.2.1.1	SCC–Based FSWS	21
3.2.1.1.1	Provided Services	21
3.2.1.1.2	Telemetry	21
3.2.1.2	FDIR	22
3.2.1.3	High Speed Serial I/O Interfaces	22
3.2.1.3.1	Serial Interface Management Function	22
3.2.1.3.1.1	Active SCC–Based FSWS Initialization and Configuration	22
3.2.1.3.1.2	Verification of High Speed Electronic Interface	22
3.2.1.3.1.3	Serial Interface CTIU–to–SCC Functions	22
3.2.1.3.1.3.1	Input	22
3.2.1.3.1.3.2	Processing Requirements	22
3.2.1.3.1.3.2.1	Nominal Processing	22
3.2.1.3.1.3.2.2	Exception Processing	23
3.2.1.3.1.3.2.3	Output	23
3.2.1.3.1.4	Serial Interface SCC–to–CTIU Functions	23
3.2.1.3.1.4.1	Input	23
3.2.1.3.1.4.2	Processing Requirements	23

TABLE OF CONTENTS (Continued)

SECTION / PARAGRAPH	TITLE	PAGE
3.2.1.3.1.4.3	Output	24
3.2.1.4	SCC's C&T Bus Embedded RT	24
3.2.1.4.1	Power–up Initialization and Configuration	24
3.2.1.4.1.1	Input	25
3.2.1.4.1.2	Processing Requirements	25
3.2.1.4.1.3	Output	26
3.2.1.5	CTIU Firmware	26
3.2.1.6	Operational Support	28
3.2.1.6.1	Memory Loading/Dumping	28
3.2.1.6.2	System Tables	28
3.2.1.6.3	Command and Data Handling	29
3.2.2	Guidance, Navigation, and Control (GN&C) Subsystem Software Requirements	29
3.2.2.1	GN&C Software External Interfaces	29
3.2.2.2	Attitude Determination and Control (ADAC) Software	33
3.2.2.2.1	ADAC Mode and Sequence Control	33
3.2.2.2.1.1	Earth Acquisition Mode	33
3.2.2.2.1.2	Normal Mode	33
3.2.2.2.1.3	Orbit Adjust Mode	33
3.2.2.2.2	Update Filter	33
3.2.2.2.2.1	Update Filter Inputs	34
3.2.2.2.2.2	Update Filter Description	34
3.2.2.2.2.3	Update Filter Outputs	34
3.2.2.2.3	Gyro Data Processing	34
3.2.2.2.3.1	Gyro Data Processing Inputs	34
3.2.2.2.3.2	Gyro Data Processing Description	35
3.2.2.2.3.3	Gyro Data Processing Outputs	35
3.2.2.2.4	Desired Attitude	35
3.2.2.2.4.1	Desired Attitude Inputs	35
3.2.2.2.4.2	Desired Attitude Description	35
3.2.2.2.4.3	Desired Attitude Outputs	36

TABLE OF CONTENTS (Continued)

SECTION / PARAGRAPH	TITLE	PAGE
3.2.2.2.5	Spacecraft Attitude Correction	36
3.2.2.2.5.1	Spacecraft Attitude Correction Inputs	36
3.2.2.2.5.2	Spacecraft Attitude Correction Description	36
3.2.2.2.5.3	Spacecraft Attitude Correction Outputs	37
3.2.2.2.6	High Gain Antenna Control	37
3.2.2.2.6.1	High Gain Antenna Control Inputs	37
3.2.2.2.6.2	High Gain Antenna Control Description	37
3.2.2.2.6.3	High Gain Antenna Control Outputs	37
3.2.2.2.7	Momentum Unloading	38
3.2.2.2.7.1	Momentum Unloading Inputs	38
3.2.2.2.7.2	Momentum Unloading Description	38
3.2.2.2.7.3	Momentum Unloading Outputs	39
3.2.2.2.8	Solar Array Drive Control	39
3.2.2.2.8.1	Solar Array Drive Control Inputs	39
3.2.2.2.8.2	Solar Array Drive Control Description	39
3.2.2.2.8.3	Solar Array Drive Control Outputs	39
3.2.2.2.9	Thruster Command	39
3.2.2.2.9.1	Thruster Command Inputs	39
3.2.2.2.9.2	Thruster Command Description	40
3.2.2.2.9.3	Thruster Command Outputs	40
3.2.2.2.10	Fault Detection and Correction (FD&C) Algorithms	40
3.2.2.2.10.1	GN&C FDIR Modes	40
3.2.2.2.10.1.1	Mode Independent FDIR	40
3.2.2.2.10.1.2	Acquisition Mode FDIR	41
3.2.2.2.10.1.3	Normal Mode FDIR	41
3.2.2.2.10.1.4	Orbit Adjust Mode FDIR	42
3.2.2.2.10.2	Solar Array Drive Failure Detection Isolation and Recovery	42
3.2.2.2.10.3	High Gain Antenna Gimbal Drive Failure Detection and Correction	42
3.2.2.3	Navigation Software	43
3.2.2.3.1	Astrodynamic Processing	43

TABLE OF CONTENTS (Continued)

SECTION / PARAGRAPH	TITLE	PAGE
3.2.2.3.1.1	Astrodynamic Processing Inputs	43
3.2.2.3.1.2	Astrodynamic Processing Description	43
3.2.2.3.1.3	Astrodynamic Processing Outputs	43
3.2.2.3.2	TDRS Propagation	43
3.2.2.3.2.1	TDRS Propagation Inputs	44
3.2.2.3.2.2	TDRS Propagation Description	44
3.2.2.3.2.3	TDRS Propagation Outputs	44
3.2.2.3.3	Navigation Filter	44
3.2.2.3.3.1	Navigation Filter Inputs	44
3.2.2.3.3.2	Navigation Filter Description	44
3.2.2.3.3.3	Navigation Filter Outputs	45
3.2.2.3.4	Real–Time Interface	46
3.2.2.3.4.1	Real–Time Interface Inputs	46
3.2.2.3.4.2	Real–Time Interface Description	46
3.2.2.3.4.3	Real–Time Interface Outputs	46
3.2.2.3.5	Orbit Element Conversion	46
3.2.2.3.5.1	Orbit Element Conversion Inputs	47
3.2.2.3.5.2	Orbit Element Conversion Description	47
3.2.2.3.5.3	Orbit Element Conversion Outputs	47
3.2.2.3.6	Fault Detection, Isolation, and Recovery (FDIR)	47
3.2.2.3.6.1	Fault Detection, Isolation, and Recovery Inputs	47
3.2.2.3.6.2	Fault Detection, Isolation, and Recovery Description	47
3.2.2.3.6.3	Fault Detection, Isolation, and Recovery Outputs	48
3.2.3	Power Monitoring and Control Software	49
3.2.3.1	Day/Night Duration	49
3.2.3.1.1	Inputs	49
3.2.3.1.2	Processing Requirements	49
3.2.3.1.3	Outputs	49
3.2.3.2	Discharge Amp–minutes	49
3.2.3.2.1	Inputs	49

TABLE OF CONTENTS (Continued)

SECTION / PARAGRAPH	TITLE	PAGE
3.2.3.2.2	Processing Requirements	50
3.2.3.2.3	Outputs	50
3.2.3.3	Charge to Discharge Ratio Required	50
3.2.3.3.1	Inputs	50
3.2.3.3.2	Processing Requirements	50
3.2.3.3.3	Outputs	50
3.2.3.4	Variable Battery Charge Rate Determination	50
3.2.3.4.1	Inputs	50
3.2.3.4.2	Processing Requirements	51
3.2.3.4.3	Outputs	51
3.2.3.5	Fixed Battery Charge Rate Determination	51
3.2.3.5.1	Inputs	51
3.2.3.5.2	Processing Requirements	52
3.2.3.5.3	Outputs	52
3.2.3.6	Battery Trickle Charge Rate Determination	52
3.2.3.6.1	Inputs	52
3.2.3.6.2	Processing Requirements	52
3.2.3.6.3	Outputs	52
3.2.3.7	Battery Theoretical SOC Determination	53
3.2.3.7.1	Inputs	53
3.2.3.7.2	Processing Requirements	53
3.2.3.7.3	Outputs	54
3.2.3.8	Actual Battery State of Charge	54
3.2.3.8.1	Inputs	54
3.2.3.8.2	Processing Requirements	54
3.2.3.8.3	Outputs	54
3.2.3.9	Battery State of Charge Based on Battery Pressure	54
3.2.3.9.1	Inputs	54
3.2.3.9.2	Processing Requirements	55
3.2.3.9.3	Outputs	55

TABLE OF CONTENTS (Continued)

SECTION / PARAGRAPH	TITLE	PAGE
3.2.3.10	Load Power Monitoring	55
3.2.3.10.1	Inputs	55
3.2.3.10.2	Processing Requirements	55
3.2.3.10.3	Outputs	55
3.2.3.11	Load Shedding	56
3.2.3.11.1	Inputs	56
3.2.3.11.2	Processing Requirements	56
3.2.3.11.3	Outputs	56
3.2.3.12	Solar Array Power Monitoring	56
3.2.3.12.1	Inputs	56
3.2.3.12.2	Processing Requirements	56
3.2.3.12.3	Outputs	56
3.2.4	Thermal Monitoring and Control Software	57
3.2.4.1	TCS Modes	57
3.2.4.2	TCS Processes	57
3.2.4.2.1	TCS Fault Detection, Isolation, and Recovery	57
3.2.4.2.1.1	Inputs	57
3.2.4.2.1.2	Processing Requirements	57
3.2.4.2.1.3	Outputs	58
3.2.4.2.2	CPHTS Reservoir Operational Heater Set–Point Temperature Changes	58
3.2.4.2.2.1	Inputs	58
3.2.4.2.2.2	Processing Requirements	58
3.2.4.2.2.3	Outputs	58
3.2.4.2.3	CPHTS Start–Up	58
3.2.4.2.3.1	Inputs	58
3.2.4.2.3.2	Processing Requirements	58
3.2.4.2.3.3	Output	59
3.2.4.2.4	Transition to Safe Mode	59
3.2.4.3	External Software Interfaces	59
3.3	External Interface Requirements	59

TABLE OF CONTENTS (Continued)

SECTION / PARAGRAPH	TITLE	PAGE
3.3.1	Ground Control Facility/LV System Interface	60
3.3.2	Subsystems Interface	60
3.3.3	Instruments Interface	60
3.4	Performance and Quality Engineering Requirements	61
3.4.1	Product Assurance Requirements	61
3.4.2	Development Requirements	61
3.4.3	Programming Standards	61
3.4.4	Ease of Modification	61
3.4.5	Ease of Testing	61
3.4.6	Ease of Expanding	61
3.5	Safety Requirements	61
3.6	Security and Privacy Requirements	61
4	VERIFICATION MATRIX	63
5	REQUIREMENTS TRACEABILITY	65
6	ABBREVIATIONS AND ACRONYMS	67
7	GLOSSARY	69
8	APPENDIX	71

LIST OF FIGURES

FIGURE	TITLE	PAGE
1	FSW System Functional Block Diagram	6
2	Command and Data Handling Subsystem Block Diagram	8
3	EOS–AM Flight Software System Context DFD	59

LIST OF TABLES

TABLE	TITLE	PAGE
I	Flight Software Maximum Utilization	14
II	Flight Firmware Maximum Utilization	14
III	C&DHS Traffic Allocation to Collect Measurement Data for GN&C Flight Software	30
IV	C&DHS Traffic Allocation to Distribute Commands for GN&C Flight Software	32

TBD LOG

ITEM	SECTION	PAGE	SUBJECT	RESP.	DUE
TBD–1	3.1.17.2	19	Absolute Time Command Processing	GSFC	SWRR
TBD–2	3.1.17.3	19	Relative Time Sequences	C&DHS	SWRR
TBD–3	3.1.17.3	19	Relative Time Sequences	C&DHS	SWRR
TBD–4	3.1.17.6	21	Time Maintenance	C&DHS	SWRR
TBD–5	3.2.2.1	29	GN&C Software External Interface	GN&C	GN&C CDR
TBD–6	3.2.2.2.2	34	Update Filter	GN&C	GN&C CDR
TBD–7	3.2.4.2.1.3	58	Outputs	TCS	C&DH CDR
TBD–8	3.2.4.2.3.3	59	Outputs	TCS	C&DH CDR
TBD–9	3.2.4.2.4	59	Transition to Safe Mode	TCS	C&DH CDR
TBD–10	3.3.2	60	Subsystem Interface	C&DHS	C&DH CDR
TBD–11	3.3.3	61	Instrument Interface	C&DHS	C&DH CDR
TBD–12	3.5	61	Safety Requirements	C&DHS	C&DH CDR

(This page intentionally left blank.)

1 INTRODUCTION

1.1 Scope

The scope of the EOS–AM Spacecraft Flight Software System Requirements Specification encompasses all of the system–level software requirements specific to the Flight Software System. Software in this context is meant to include all software programs resident in Read Only Memory (ROM) and Random Access Memory (RAM) that execute in any of the two Command and Data Handling (C&DH) Subsystem processing resources – the Spacecraft Controls Computer (SCC), and the Command and Telemetry Interface Unit (CTIU).

It is the intent of this document to provide functional requirements for the EOS–AM Flight Software System. Equations are used for the purpose of illustrating a particular software program or process and should not be interpreted as a requirement to implement that program or process.

1.2 Objectives

The purpose of this specification is to specify and describe the complete set of system–level software requirements decomposed and allocated to the Flight Software System. The majority of these requirements were taken unchanged from the Subsystem Specifications and the Contract End Item (CEI) Specification. These requirements are allocated to the appropriate EOS–AM Spacecraft Software Requirements Specifications for the Computer Software Configuration Item (CSCI), which will further decompose and derive the complete set of software requirements for that CSCI.

1.3 Applicable Documents

The following documents are parents to this document:

PS20001415 28 September 1992	Mechanical Subsystem Specification (SP–101)
PS20004749 1 September 1992	Electric Power Subsystem Specification (SP–501)
PS20004937 7 September 1992	Performance Specification for Guidance, Navigation and Control Subsystem (SP–601).
PS20005396 15 April 1993	Contract End Item Specification (SEP–101)
PS20008549 30 September 1992	Performance Specification for Thermal Control Subsystem (SP–201).
PS20008567 7 April 1993	Command and Data Handling Subsystem Specification (SP–301).
PS20008580 27 July 1992	Communications Subsystem Specification (SP–401)

Source:	Martin Marietta Astro Space P. O. Box 800 Princeton, NJ 08543–0800

The following documents are applicable or contain policies or other directive matters that are binding upon the content of this specification:

Other Government Agencies

GSFC 420–03–02 01 December 1992	Earth Observing System General Instrument Interface Specification for the EOS Observatory
NASA–DID–P200 29 July 1991	Requirements Data Item Description
NASA–STD–2100–91 29 July 1991	NASA Software Documentation Standard Software Engineering Program

Other Publications

20001422 26 October 1992	EOS–AM Spacecraft Software Development Plan (MD–109)
20008550 26 October 1992	EOS–AM Spacecraft Programming Practices, Standards and Conventions (PPS&C) Document (MD–109)
20008688 7 June 1991	Software Development Facility Requirements Definition Document (SP–976)
20039967	Flight Software Subsystem Interface Requirements Document
IS20008658 26 August 1992	Data Format Control Book (ICD–106)
EOS–DN–SE&I–025C 13 January 1993	EOS–AM Spacecraft Program Acronym List
EOS–DN–SW–036A 13 January 1993	EOS–AM Spacecraft Software Glossary
PN20008655 26 October 1992	EOS–AM Spacecraft Software Management Plan (MD–108)
PS20008569 07 April 1993	CTIU Component Specification
Source:	Martin Marietta Astro Space P. O. Box 800 Princeton, NJ 08543–0800

1.4 Reference Documents

The following documents, although not directly applicable, amplify or clarify the information presented in this specification.

PS20008516 2 November 1992	Flight Software Operational Concept Document for the EOS–AM Spacecraft (SD–101A)
Source:	Martin Marietta Astro Space P. O. Box 800 Princeton, NJ 08543–0800

(This page intentionally left blank.)

2 FLIGHT SOFTWARE SYSTEM DEFINITION

2.1 General Description

The EOS–AM spacecraft is composed of two primary elements – the spacecraft bus and instruments. The purpose of the Flight Software System is to monitor, control and integrate these elements and to provide the means that allows them to perform as a single entity, the spacecraft. As a single entity, the ground will command and use the spacecraft to provide the necessary information needed to fulfill the requirements of the EOS–AM Spacecraft.

The objectives for the Flight Software System are to provide the necessary services needed to sustain a spacecraft throughout its life span in support of the collection and transmission of the EOS–AM Instrument set science data. The minimum services are as follows:

a. the acquisition and maintenance of the required orbital environment in which the spacecraft may successfully operate.

b. the capability to communicate with the ground control facility to receive spacecraft commands and transmit spacecraft telemetry.

c. the capability to communicate with the ground control facility to receive instrument commands and transmit instrument science telemetry.

d. the autonomous response capability by which anomalous situations on board the spacecraft may be detected and the proper response taken in order to ensure survivability.

2.2 Organization and Structure

The Flight Software System has been functionally decomposed into seven Computer Software Configuration Items (CSCIs), as shown in the functional block diagram of Figure 1. Two of these CSCIs are firmware embedded in each of the two distinct processor types – SCC, and CTIU. The remaining five CSCIs shall execute from the SCC RAM that constitutes the SCC Flight Software package.

The SCC is the central flight computer. It receives commands and data from the ground via the CTIU for specific subsystems and instruments. The SCC determines and controls the vehicle's position, attitude, power distribution, and thermal loading by issuing commands to the appropriate subsystem equipments over the Command and Telemetry Bus via the CTIU and BDU. All autonomous recovery actions taken in response to any Fault Detection, Isolation and Recovery (FDIR) action, which changes the EOS spacecraft configuration, while under control of the SCC, are controlled and maintained by SCC Flight Software. The SCC Flight Software monitors predefined telemetry points for anomalies and issues predefined commands or command sequences to correct for the anomalies. All subsystem and instrument housekeeping data will be collected from the Command and Telemetry Bus by the CTIU and sent to the SCC over a dedicated communication link. Collected telemetry will be formatted by the CTIU for downlink telemetry.

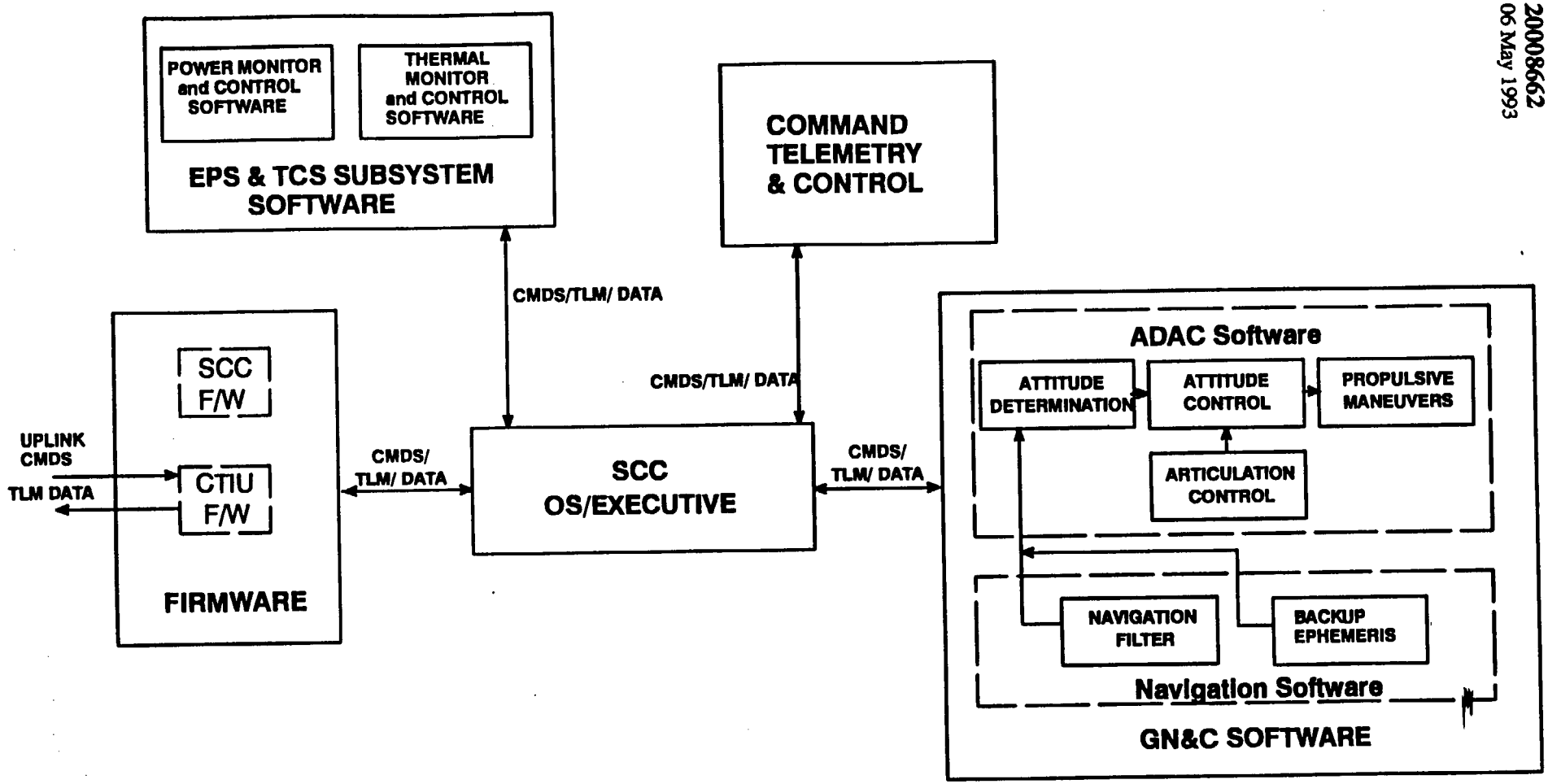

LEGEND

ADAC = Attitude Determination and Control
BDU = Bus Data Unit
C&DH = Command and Data Handling
CTIU = Command and Telemetry Interface Unit
OS = Operating System
PMCS = Power Monitoring and Control Software
SCC = Spacecraft Controls Computer
TLM = Telemetry
TMCS = Thermal Monitoring and Control Software
TONS = TDRSS On–Board Navigation Software

Figure 1. FSW System Functional Block Diagram

2.3 Operating Environment

Figure 2 depicts the Command and Data Handling (C&DH) Subsystem Block Diagram which shows the interrelationships between the processors and the rest of the EOS AM Spacecraft. The Flight Software System resides in the CTIU and SCC processors. Each processor is a MIL–STD–1750A processor.

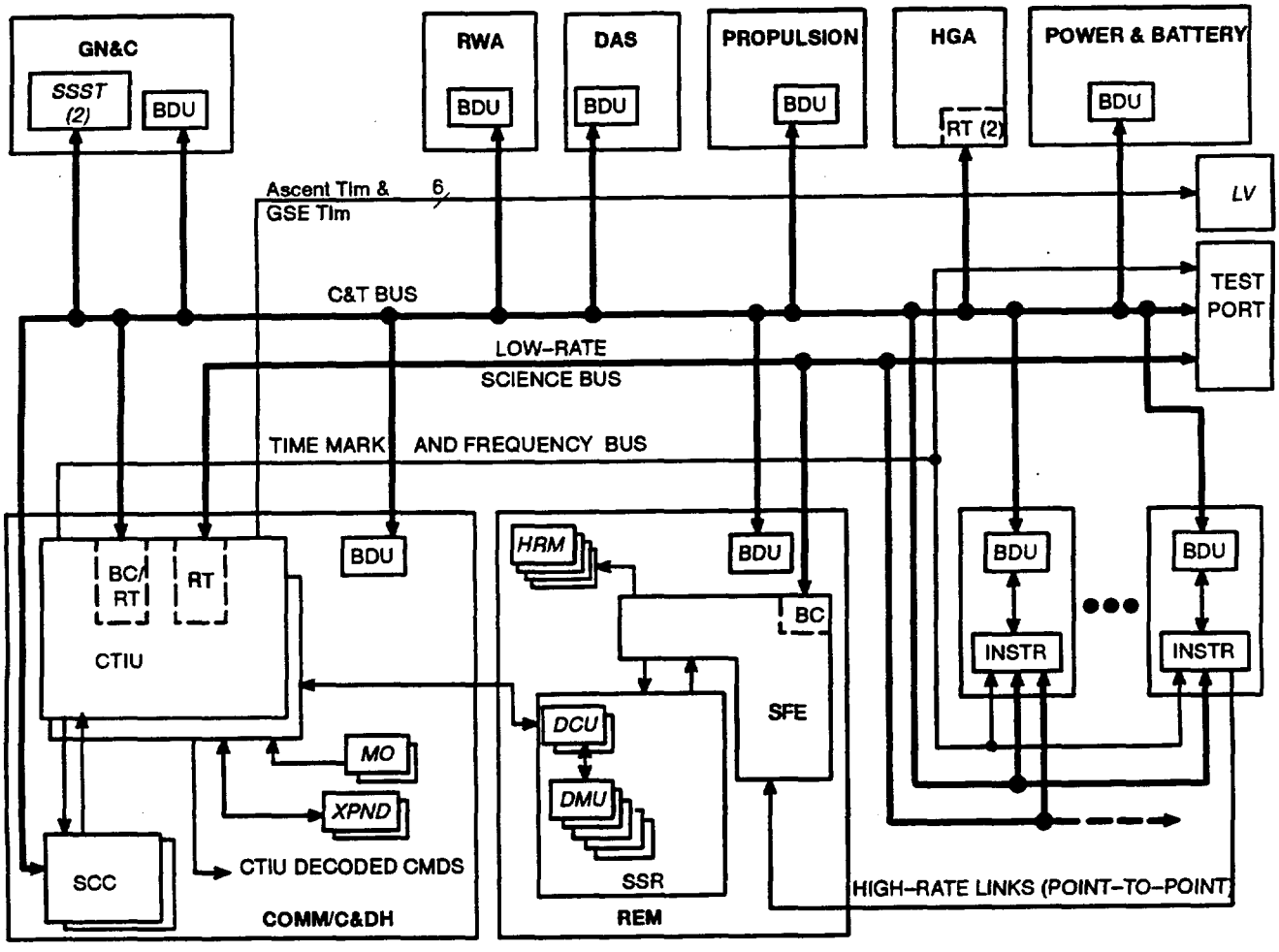

LEGEND

BC	= MIL-STD-1553B Bus Controller	*LV*	= Launch Vehicle
BDU	= Bus Data Unit	*MO*	= Master Oscillator
C&T	= Command & Telemetry	REM	= Recorder Equipment Module
CTIU	= Command and Telemetry Interface Unit	RT	= MIL-STD-1553B Remote Terminal
DAS	= Direct Access System (Comm)	RWA	= Reaction Wheel Assembly
DCU	= Data Control Unit	SCC	= Spacecraft Controls Computer
DMU	= Data Memory Unit	SFE	= Science Formatting Equipment
GN&C	= Guidance Navigation and Control	SSR	= Solid State Recorder
GSE	= Ground Support Equipment	SSST	= Solid State Star Tracker
HGA	= High Gain Antenna	TLM	= Telemetry
H/K	= Housekeeping	*XPND*	= S-band Transponder
HRM	= High-Rate Modulators (KSA&DAS)		
INSTR	= Instrument		

NOTE: All busses are redundant
Italics : Non-C&DHS Equipment
BOLD : Equipment Module

MIL-STD-1553B BUS

Indicates number of components

Figure 2. Command and Data Handling Subsystem Block Diagram

3 FLIGHT SOFTWARE SYSTEM REQUIREMENTS

3.1 Contract End Item (CEI)–Imposed Software Requirements

3.1.1 EOS Data and Information System (EOSDIS) Interfaces

All Spacecraft interfaces to the EOSDIS shall comply with the data format and protocol requirements specified in EOS–AM Spacecraft Data Format Control Book, IS20008658.

3.1.2 Spacecraft Processing Interfaces

The Spacecraft shall interface with GSE and facilities as necessary to support Spacecraft integration, test, and prelaunch operations. The Spacecraft shall interface with Launch Vehicle System supplied GSE and facilities defined in the EOS AM Spacecraft to Launch Vehicle Interface Requirements Document, IS20008503.

3.1.3 EOS Ground System Test Support

The Spacecraft shall participate in end-to-end testing of the command and data handling elements of the EOS Ground System.

3.1.4 Independent Instrument Operation

The Spacecraft Bus shall permit the operation of each Instrument independent of that of other Instruments.

3.1.5 Commandability

3.1.5.1 Previous State Independence

Spacecraft Bus subsystems and components shall be commandable to known states regardless of earlier states.

3.1.5.2 State–Dependent Functionality

Spacecraft Bus commands shall each have only one implementation. The function initiated by any command shall not vary as a function of the existing state of the Spacecraft equipment executing the command (i.e., no "toggle" commands). The function initiated shall not vary as a function of the existing Spacecraft operating mode.

3.1.5.3 Single Command Recovery

No single command shall place the Spacecraft into an anomalous configuration from which it cannot recover.

3.1.5.4 Housekeeping Telemetry

The Spacecraft Bus shall collect and transmit to the ground Spacecraft telemetry data.

3.1.5.4.1 Housekeeping Telemetry Data Content

Spacecraft Bus communications return links shall contain housekeeping telemetry which includes:

a. Indication of the current Spacecraft System Mode

b. Data indicative of the current status of the on–board subsystems and Instruments

c. Health and safety status data

d. Indications of resource usage

e. Indications of sensed failures or anomalies, if any

f. Data suitable for verifying execution of each Spacecraft command

g. Notification of all autonomous switching between redundant paths

h. Warning and advisory data, if any

i. Periodic samples of the navigation/attitude state vector

j. Any Instrument provided telemetry

3.1.5.4.2 On–Orbit Telemetry Redefinition

The Spacecraft shall allow the on–orbit redefinition of housekeeping telemetry stream contents.

3.1.6 Attitude Determination and Control

3.1.6.1 Safe Mode

3.1.6.1.1 Autonomous Entry

The Spacecraft shall autonomously enter Safe Mode under either of the following conditions: a) detection that the processors or flight software are incapable of supporting safe Spacecraft operations or, b) the GN&C subsystem fails to maintain the spacecraft attitude within predetermined thresholds.

The Spacecraft shall not autonomously enter Safe Mode due to attitude errors detected as a result of transitioning between using TONS and the using the Spacecraft ephemeris data for navigation.

3.1.6.1.2 Safe Mode Exit

Exit from Safe Mode shall occur only when commanded by the ground.

3.1.7 Command and Data Handling

3.1.7.1 General

3.1.7.1.1 Spacecraft ConfigurationControl

The Spacecraft Bus shall execute ground commands for redundancy switching and loading and dumping of software and of programmable data.

3.1.7.1.2 Command Processing

The Spacecraft shall accept commands for both real–time and stored command execution.

3.1.7.1.2.1 Processing Data Rates

The Spacecraft Bus shall accept and process uplinked command data and computer memory load data at rates commensurate with the capacities of the ground–to–Spacecraft communications links.

3.1.7.1.2.2 Real–Time Command Execution

The Spacecraft shall distribute real–time commands within 1.024 second of receipt via the command links. The Spacecraft Bus shall distribute commands in the same order received.

3.1.7.1.2.3 Stored Command Processing

The Spacecraft Bus shall provide both Absolute–Time and Relative–Time Command Sequence (RTCS) stored command services. The Spacecraft Bus shall inhibit execution of classes of stored commands under control of flight software and ground command.

3.1.7.1.2.3.1 Absolute–Time Stored Commanding

The Spacecraft shall accept commands and associated execution times for Absolute–Time stored commanding. Each command shall be distributed within 1.024 second after the Spacecraft time reaches the execution time. The Spacecraft Bus shall be capable of storing at least 3000 Absolute–Time stored commands per day.

3.1.7.1.2.3.2 Relative–Time Command Sequence (RTCS) Stored Commanding

The Spacecraft Bus shall accept and store sequences of commands and associated relative execution times. Execution of these sequences shall be initiated by commands from flight software, and from the real–time and stored command services.

Each command in the sequence shall be executed at the relative time associated with it, starting at the initiation time of the sequence. The Spacecraft shall store at least 128 relative time command sequences of up to 16 commands each.

3.1.7.1.2.3.3 Stored Command Inspection/Modification

The Spacecraft shall allow the inspection and modification of stored commands and command sequences by ground controllers.

3.1.8 Failure Detection/Correction

3.1.8.1 Failure Tolerance

In the event of a failure on the Spacecraft, the Spacecraft Bus shall provide those resources and services required for Spacecraft Bus and Instrument survival. The minimum services shall include:

a. Accepting and executing commands from ground delivered via contingency or emergency links

b. Delivering Instrument commands to the intended Instruments

c. Monitoring the health and safety telemetry stream

d. Delivering the health and safety telemetry stream to the ground via contingency or emergency links

e. Providing power for all survival critical equipment

f. Maintaining spacecraft attitude

g. Providing thermal control both for operating equipment (i.e. survival critical equipment) and non–operating equipment

3.1.8.1.1 Single Credible Hard Failure Tolerance

The Spacecraft Bus shall perform the functions specified herein after any single credible hard failure.

3.1.8.1.2 Containment

No single Spacecraft functional or physical failure shall cause other failures external to the component or Instrument in which the failure occurs.

3.1.8.2 Failure Monitoring

3.1.8.2.1 Critical Failure Detectability

Failures which may threaten Spacecraft survival shall be detected and reported in the telemetry.

3.1.8.2.2 Health and Status checks

The Spacecraft Bus shall perform on–orbit health and status checks of all subsystems and Instruments to verify Spacecraft integrity and status.

3.1.8.3 Failure Responses

3.1.8.3.1 General

The Spacecraft Bus shall continuously provide resources and services as required for Spacecraft Bus and Instrument survival.

3.1.8.3.1.1 Override

The Spacecraft shall allow the override of all autonomous anomaly responses by ground control

3.1.8.3.1.2 Not time–critical

The Spacecraft shall await ground intervention in response to anomalies which do not require time–critical action.

The Spacecraft Bus shall be capable of issuing predefined command sequences in response to selected anomalous conditions that do not require entry into a safe configuration.

3.1.8.4 Failure Detection

The Spacecraft Bus shall provide periodic monitoring and ground commanded testing of housekeeping equipment. The Spacecraft Bus shall transmit the data to the ground for check–out, fault detection and location of faults to the point at which a redundant path is available.

3.1.9 Software

3.1.9.1 General

3.1.9.1.1 Integrity and Revision Verification

The Spacecraft Bus flight software shall incorporate provisions for verifying the integrity of and the revision of loaded software via telemetry.

3.1.9.1.2 Computer Program Implementation

Spacecraft Bus components which comprise computer programs shall, where practical, be implemented as software and be reprogrammable on orbit. Where this is impractical, the computer programs shall be embodied in non–volatile memory (i.e., implemented as firmware) which is not reprogrammable on orbit.

3.1.9.2 Software Development

3.1.9.2.1 Development Documentation

All Spacecraft Bus software with greater than 5000 software lines of code to be implemented shall be developed in compliance with the NASA Standard Software Life Cycle defined in SMAP 4.0 and documentation standards defined in NASA–STD–2100–91, and in compliance with the policies defined in 421–10–03 (EOS AM Project Spacecraft Bus Software Management Plan).

3.1.9.2.2 Life Cycle

Adaptations to the life cycles specified in the documents of 3.1.9.2.1 shall be considered when the Source Lines of Code (SLOC) to be implemented are greater than 500 and equal to or less than 5000. Life cycle and documentation standards defined in NASA–STD–2100–91 do not apply when the SLOC to be implemented are equal to or less than 500.

3.1.9.2.3 Programming Language

Where practical, all Spacecraft Bus software shall be developed in the Ada programming language as per ANSI/MIL–STD–1815A. Where Ada is not used, another appropriate high–level programming language shall be used if practical. Spacecraft Bus software shall be developed using assembly language only where dictated by software performance (i.e., speed) requirements or by the lack of an appropriate high–level language for the host processor.

3.1.9.2.4 Flight Software Maximum Utilization

All Spacecraft Bus software shall comply with the maximum utilization requirements set forth in Table I at the times of the various listed events. All Spacecraft Bus firmware shall comply with the maximum utilization requirements set forth in Table II at the times of the various listed events.

Table I. Flight Software Maximum Utilization

Parameter	PDR	CDR	FRR	Launch
RAM	42%	51%	57%	60%
CPU	35%	42.5%	47.5%	50%
I/O	35%	42.5%	47.5%	50%

Table II. Flight Firmware Maximum Utilization

Parameter	PDR	CDR	FRR	Launch
RAM	49%	59.5%	66.5%	70%
CPU	56%	68%	76%	80%
I/O	56%	68%	76%	80%

3.1.10 I&T Accommodations

3.1.10.1 General

3.1.10.1.1 Modularity

The Spacecraft shall be of modular construction to the extent practical to facilitate I&T.

3.1.10.1.2 Standardization

The Spacecraft Bus shall utilize standardized hardware, software, data formats, and procedures to facilitate maintenance.

3.1.10.1.3 Existing Ground Equipment Use

The Spacecraft Bus shall be designed to use existing ground equipment to perform maintenance functions, wherever practical, rather than requiring the design of new equipment.

3.1.10.1.4 New Maintenance Equipment Use

When new maintenance equipment is required to maintain Spacecraft elements which are part of a group of physically or functionally identical or similar elements, the equipment shall be designed to perform its task(s) on each element of that group, where practical.

3.1.10.1.5 Prelaunch Support

The Spacecraft shall support prelaunch integration and checkout of the Spacecraft by incorporating interfaces for external stimuli or simulators, where appropriate, and by performing status checks and executing sample command loads.

Command and housekeeping telemetry capabilities shall be available both with and without RF links.

3.1.10.1.6 Verifiable Test Equipment

All test equipment shall be functionally verifiable.

3.1.10.1.7 Test Equipment Calibration

Spacecraft test equipment shall be calibrated in accordance with GSFC 420–05–02.

3.1.11 Design and Construction

3.1.11.1 Safety Interlock Mechanisms/Techniques

The Spacecraft Bus shall incorporate safety interlock mechanisms, implemented in hardware or software to prevent the execution of predefined commands which are potentially hazardous to personnel or to the Spacecraft without prior confirmation or arming by ground operators.

3.1.12 Precedence

3.1.12.1 Precedence of Design Criteria

Design decisions shall accommodate compliance with safety requirements specified in this document before accommodating any other considerations (e.g., cost, schedule, performance)

3.1.13 Subsystem and Major Assembly Requirements

3.1.13.1 General Subsystem Functions

Each Spacecraft Bus subsystem shall perform all functions allocated to it, unless otherwise specified, throughout mission life.

Each subsystem shall provide resources or services as required for Spacecraft and Instrument survival.

3.1.13.2 Subsystem Failure Tolerance

Each subsystem shall be single credible hard failure tolerant. For analysis purposes, EAS failures shall be treated as failures of the subsystem whose EAS–provided services are interrupted.

3.1.14 General Subsystem Commands and Telemetry

3.1.14.1 Subsystem Commands

Each subsystem shall accept, and execute upon receipt, commands delivered to it via the C&DHS.

3.1.14.1.1 Function Override/Inhibit Commands

All subsystems shall accept and execute commands to override or inhibit the execution of autonomous functions which may interfere with Spacecraft operations or jeopardize the health of the Spacecraft. Such functions shall include, as a minimum, those which may cause:

a. The transition of the Spacecraft out of science mode

b. The issuance of any commands whose execution may be inadvisable after a particular anomaly, and

c. The issuance of any commands which would configure the subsystem to follow a particular redundant path (one which may have been assessed to be faulty)

3.1.14.2 Subsystem Telemetry

3.1.14.2.1 Health and Safety Telemetry Content

The health and safety telemetry provided by each subsystem in all Spacecraft modes shall be sufficient to support all operations. These data shall indicate the current status of the subsystem, and shall allow assessment and monitoring of the subsystem.

Subsystem and component failures which may threaten Spacecraft survival shall be detectable in health and safety telemetry.

3.1.14.2.2 Housekeeping Telemetry Content

The housekeeping telemetry provided by each subsystem shall allow ground controllers to assess the operational state of the subsystem, monitor critical subsystem functions, and aid in fault detection and correction.

Subsystem housekeeping telemetry shall, as a minimum, contain the following:

a. Redundancy status of the subsystem and components

b. Health and safety status data

c. Indications of resource usage

d. Indications of sensed failures or anomalies, if any

e. Data suitable for verifying execution of each Spacecraft command

f. Notification of all autonomous switching between redundant paths

Each active Spacecraft subsystem shall provide, during all modes, telemetry points necessary for monitoring the operation of its hardware and software components. Any autonomous corrective actions taken shall be reported to the ground via housekeeping telemetry. This report shall be periodically repeated until acknowledged from the ground.

3.1.14.3 General Subsystem Computer Programs

Each subsystem containing code used to ensure Spacecraft survival shall maintain that code in non–volatile media for initiation or restoration after anomalies.

3.1.14.3.1 General Subsystem Interface Standardization

Each subsystem and component shall utilize the standard interfaces defined in the GIS, unless an exception is explicitly noted in its specification.

3.1.15 Flight Software System (FSWS)

3.1.15.1 FSWS General Functions

The Flight Software System (FSWS) shall supply all Spacecraft Bus flight software, and firmware for selected C&DHS components which contain embedded processors.

3.1.15.2 FSWS System Support Functions

The FSWS shall initiate spacecraft load shedding upon sensing that the orbit average spacecraft power load exceeds the spacecraft power generation capability.

3.1.15.3 FSWS Subsystem Support Functions

The FSWS shall execute software control, monitoring, FDIR, and other algorithms required by other subsystems as allocated by the subsystem specifications.

3.1.15.4 FSWS Telemetry Monitoring

The FSWS shall provide a Telemetry Monitor service to subsystems, in support of autonomous FDIR actions due to time–critical anomalies or failures.

Upon detection of an active trigger condition, the Telemetry Monitor shall issue a predefined command or shall trigger execution of a predefined RTCS.

3.1.15.5 FSWS Ancillary Data Support

The Flight Software System shall accept ancillary data generated by subsystems.

The FSWS shall provide the C&DHS with formatted ancillary data for distribution to the Instruments.

The FSWS shall provide ancillary data messages to the C&DHS. The duration of FSWS processing of any data will never exceed .924 seconds.

3.1.15.6 FSWS Command and Memory Load Processing Rates

The FSWS shall accept and process uplinked command data and computer memory load data at rates commensurate with the capacities of the ground–to–Spacecraft communications links.

3.1.15.7 FSWS FDIR

Software FDIR shall monitor the Spacecraft central computer and related processing equipment operation. Upon detection of failure of the system to provide necessary resources, it shall withhold distribution of the computer "OK" message, causing autonomous transition to Safe Mode.

The FSWS shall monitor its own execution. Upon detection of anomalous operation, shall withhold distribution of the computer "OK" message, causing autonomous transition to Safe Mode.

3.1.15.8 FSWS Software Operating Environment

The FSWS shall provide a standardized software operating environment for the execution of subsystem application software.

3.1.16 Quality Assurance Provisions

The Performance Assurance Implementation Plan (PAIP), PN2005397, documents the overall quality assurance approach for the EOS AM Spacecraft Bus. The specifics of the Performance Verification process are documented in the Verification Plan, PN20005404. The Verification Plan includes the verification matrix describing the methods and approaches to be used to verify the compliance of the Spacecraft Bus with each requirement of this CEI Specification.

The Spacecraft Bus quality assurance program, as documented in the PAIP and the Verification Plan, shall comply with all applicable quality assurance requirements of NASA 421–10–01 (the RD), NASA 420–05–02 (the PAR), the Instrument UIIDs, and the GIIS.

3.1.17 Operational Support

3.1.17.1 Absolute Time Command (ATC) Storage

[1] The FSWS shall provide additional storage (for absolute time commands) to allow operations to continue during a communications outage of one orbit duration.

[2] The FSWS shall verify stored command loads via CRC.

3.1.17.2 Absolute Time Command Processing

[1] The FSWS shall enable and disable processing by ground command.

[2] The FSWS shall prevent re–execution of stored commands.

[3] The following ATC commands shall be implemented:

a. NOOP

b. JUMP (change command address pointer)

c. HALT.

[4] The FSWS shall provide for the insertion of the NOOP, JUMP and HALT commands via realtime command. (Further editing capabilities, such as inserting a command sequence, must be authorized by GSFC before stating as a requirement **(TBD–1)**).

[5] ATC commands shall be able to activate relative time command sequences.

[6] ATC commands shall be able to modify system tables. (This requires a lockout feature to prevent interference with operational software).

3.1.17.3 Relative Time Sequences (RTS)

[1] The FSWS shall enable and disable processing by ground command.

[2] RTSs shall be initiated by realtime command, absolute time command, or software function.

[3] RTS commands shall be able to activate other RTSs (**(TBD–2)** – further definition of RTS utilization is required).

[4] Multiple RTSs shall be able to execute concurrently. Maximum number is **(TBD–3)**– further definition of RTS utilization is required.

[5] RTS commands shall be able to modify system tables. This requires a lockout feature to prevent interference with operational software.

[6] The FSWS shall be able to process multiple RTS commands vying for execution at the same time step.

[7] The FSWS shall provide for the disabling of a RTS by realtime command, FDIR, and other stored commands, even after execution has begun.

[8] The FSWS shall provide for RTS replacement by its identifier.

[9] The FSWS shall provide for the expansion of a RTS to the maximum allowable size.

3.1.17.4 Telemetry Monitor (TMON)

[1] The FSWS shall adjust TMON procedures via table modifications, not software code revision.

[2] The FSWS shall allow for the organization and control of TMONs in two categories, one for FDIR and one for normal operation support.

[3] Operational support TMONs shall use only prediction data, as opposed to sensed telemetry, to determine pertinent orbital events (eg. night/day transition, equator crossing).

[4] The FSWS shall allow TMON to read computer data (including time) and status registers.

[5] The FSWS shall provide the capability for TMON to apply a mask to collected data words.

3.1.17.5 Telemetry Reporting

[1] The FSWS shall provide the capability to generate an activity log consisting of a variable set of data and downlinked as normal telemetry or via memory dump. (Typical data would be software error messages and controls commands issued.)

[2] Definition of activity log content shall not require software revision. (This requires allocation of a fixed bandwidth, with variable content.)

[3] The FSWS shall implement a memory monitor capability to sample memory locations and status registers as directed by command, and include in telemetry. (This requires allocation of a fixed bandwidth, with variable content.)

[4] The FSWS shall provide a table driven telemetry processing program to compute significant values for downlink during the next pass. (Examples of processing would be to compute: Orbit Average, End–of–Day values, End–of–Night values, "Event" values)

[5] The data sets generated by the activity log, memory monitor, and telemetry processing functions shall be defined by a table.

[6] The data set definition table for the activity log, memory monitor, and telemetry processing functions shall, as an option, be telemetered along with the data.

[7] The following shall be reported in telemetry:

a. FDIR (TMON) status

b. ATC pointer value

c. RTS status

[8] Telemetry tables shall be modifiable via ground command upload of new table values.

[9] The telemetry table revision process shall be performed within one Master Cycle.

[10] Fill data shall be transmitted during the Master Cycle dedicated to the telemetry table revision process.

[11] Telemetry shall include an indicator which defines whether the original or a revised telemetry table is in use.

[12] There shall be a separate telemetry table indicator for each remote terminal and the CTIU.

3.1.17.6 Time Maintenance

[1] Application of clock updates shall require the use of process interlocks with TONS software. ((TBD–4)– Time distribution and maintenance procedures are currently under review.)

3.1.17.7 Command and Data Handling

[1] The ground shall be able to "inhibit" software or software generated commands which normally control S/C devices such as SAD, and thrusters. (The ground will provide control sequences either in real–time or via stored command. The last command of the ground provided sequence can be used to reactivate the normal software control.)

[2] Ancillary data shall be annotated for Quicklook processing (on the ground) while any instrument is issuing Quicklook data.

3.2 Subsystem–Imposed Software Requirements

3.2.1 Command and Data Handling Subsystem (C&DHS) Software Requirements

3.2.1.1 SCC–Based FSWS

3.2.1.1.1 Provided Services

[1] The SCC–based FSWS system shall provide the C&DHS with all services specified herein throughout all mission phases.

[2] The SCC–based FSWS shall perform the following monitoring for the C&DHS.

a. IMOK

b. SCC temperature

[3] The SCC–based FSWS shall provide the following Relative Time Sequence (RTS) for the C&DHS:

a. to transition the C&DHS from its science mode to its survival mode,

b. to transition the C&DHS from its standby mode to its survival mode,

c. to transition the C&DHS from its science mode to its standby mode.

d. BDU redundancy switch–over.

3.2.1.1.2 Telemetry

[1] The SCC–based FSWS shall generate sufficient housekeeping data in the downlinked telemetry stream to allow ground controllers to assess the operational state of the SCC, monitor critical functions and aid in fault detection and correction.

[2] The SCC–based FSWS shall generate data in the downlink telemetry streams sufficient to support ground controller monitoring and logging of SCC resources, its configuration/reconfiguration and its significant events.

[3] The SCC–based FSWS shall utilize the C&T bus to transmit its telemetry data for inclusion in the H/K telemetry and H&S telemetry.

[4] The SCC–based FSWS shall generate telemetry commiserate with its current operational state.

3.2.1.2 FDIR

[1] The active SCC–based FSWS health check shall perform a health check to support diagnostics.

[2] The standby SCC–based FSWS health check shall perform a health check to support diagnostics.

[3] The active SCC shall provide data indicating the corrective action(s) taken in telemetry.

3.2.1.3 High Speed Serial I/O Interfaces

3.2.1.3.1 Serial Interface Management Function

The SCC–based FSWS shall provide status of the high speed serial interfaces as part of its telemetry.

3.2.1.3.1.1 Active SCC–Based FSWS Initialization and Configuration

The active SCC–based FSWS, based on resident configuration data, shall establish the high speed serial I/O interfaces between the active CTIU and itself as part of transitioning the SCC to an active operational state.

3.2.1.3.1.2 Verification of High Speed Electronic Interface

The SCC–based FSWS shall re–transmit a loopback message over the SCC–to–CTIU upon receipt of a loop–back on the CTIU–to–SCC interface.

3.2.1.3.1.3 Serial Interface CTIU–to–SCC Functions

3.2.1.3.1.3.1 Input

a. H/K telemetry

b. SCC closed loop data from Spacecraft components

3.2.1.3.1.3.2 Processing Requirements

3.2.1.3.1.3.2.1 Nominal Processing

[1] Nominal processing shall provide accepting, decoding, validating and distributing the input data streams (H/K telemetry, SCC closed loop data) as required.

[2] The SCS–based FSWS shall support message validation and acknowledgment as specified for the high speed serial I/O interface in FSWS IRD, 20039967.

3.2.1.3.1.3.2.2 Exception Processing

a. Any message rejection shall be reported in telemetry.

b. Any interface problem shall be reported in telemetry.

3.2.1.3.1.3.2.3 Output

a. Serial interface status in housekeeping telemetry

3.2.1.3.1.4 Serial Interface SCC–to–CTIU Functions

3.2.1.3.1.4.1 Input

a. SCC closed loop commands

b. H/K telemetry

c. IMOK message

3.2.1.3.1.4.2 Processing Requirements

[1] Command data transfers:

a. The SCC–based FSWS shall support the data message interface protocol data for message headers and trailers, message validation and acknowledgment as specified for the high speed serial link in FSWS IRD, 20039967.

b. Messages distributed by the CTIU to Spacecraft equipment:

1. All messages shall look the same once the message protocol is removed whether they are transmitted over the high speed serial I/O interface or the uplink (forward service link)

2. Messages, such as one only between the active SCC and active CTIU, shall contain a command structure which includes a 1553B command word.

c. The SCC–based FSWS shall ensure all command data transfers delivered to the CTIU are in–order.

d. The SCC–based FSWS shall perform command data transfer flow control and prioritization among command data transfers.

[2] Command data transfers containing commands:

a. The SCC–based FSWS shall distribute commands to the Spacecraft equipment at a data rate with respect to the SCC–based FSWS command data transfer distribution specified in paragraph 3.2.1.1.3.2 of the C&DH Subsystem Spec. (PS20008567)

b. The SCC–based FSWS shall ensure commands it transmits to the CTIU for delivery within the same minor cycle have different RT addresses.

c. The SCC–based FSWS shall ensure relay drive commands to the same recipient are spaced to allow time for a preceding relay drive command to complete.

[3] Command data transfer containing an ancillary data packet:

a. The SCC–based FSWS shall generate the ancillary data packet as specified in Section 6 of the GSFC 420–03–02 with respect ancillary data content and packet format.

b. The SCC–based FSWS shall ensure the ancillary data packet is delivered to the CTIU in minor cycle N–3 where the first ancillary data packet is scheduled by the bus utilization table to be delivered to an Instrument in minor cycle N.

[4] Command data transfers containing SCC OK message:

a. The SCC–based FSWS shall:

1. perform a health check over hardware
2. perform a health check over SCC–based FSWS
3. only transmit the SCC OK message to the CTIU if health check positive
4. repeat this health check every 1.024 seconds.

b. The SCC FSWS shall ensure the SCC OK message is delivered to the CTIU in minor cycle N–3 where the first IMOK message is scheduled by the bus utilization table to be delivered to a recipient in minor cycle N.

c. The SCC–based FSWS shall prepare the IMOK messages as specified in FSWS IRD, 20039967, for both the ACE and PDU as separate command data transfer containing commands to the CTIU for distribution.

d. The SCC–based FSWS shall ensure the IMOK messages are received at the expected time by the ACE and PDU respectively.

3.2.1.3.1.4.3 Output

a. Command data transfers containing commands

b. Command data transfer containing ancillary data packet

c. Command data transfers containing SCC OK message if health test results are positive

d. Command data transfers containing safe mode commanding if IMOK is not received when expected

3.2.1.4 SCC's C&T Bus Embedded RT

3.2.1.4.1 Power–up Initialization and Configuration

[1] The SCC–based FSWS shall re–initialize its C&T RT upon command.

[2] During the RT initialization, the SCC–based FSWS shall set the busy bit in the RT status word as early as possible to prevent the C&T message traffic from being processed.

[3] Upon completion of the successful initialization, the SCC–based FSWS shall reset the busy bit.

3.2.1.4.1.1 Input

a. Commands for SCC (T/R=Receive, RT subaddress =1)

b. Mode code commands (T/R=Receive, RT subaddress=0 or 31) (T/R=Transmit, RT subaddress=0 or 31) of which synchronize with data word (T/R=Receive, RT subaddress=31) is one

c. Memory Loads (T/R=Receive, RT subaddress=2)

d. IMOK (T/R=Receive, RT subaddress=5)

e. Time Code (T/R=Receive, RT subaddress=6)

f. C&DHS safe mode commanding (T/R=Receive, RT subaddress=7)

g. Loop–back (T/R=Receive, RT subaddress=9) and data gather request (T/R=Transmit, RT subaddress=9)

h. Data gather request (T/R=Transmit) (memory dump data: RT subaddress=2, H/K telemetry: RT subaddress=17, H&S telemetry: RT subaddress=18)

3.2.1.4.1.2 Processing Requirements

[1] Host responsibility for an embedded RT:

a. The SCC–based FSWS shall utilize the C&T bus to receive and transmit data between the itself and the active CTIU as specified in Table XVI of the C&DH Subsystem Spec (PS20008567), Functionality of SCC's Operational States.

b. During initialization of the C&T RT, the busy bit shall be asserted by the host until it is ready to accept C&T bus messages.

c. The SCC–based FSWS shall monitor the C&T RT message transactions.

d. The host shall report the C&T bus related problems in its telemetry.

e. The SCC C&T RT shall store validated messages in memory accessible to the SCC–based FSWS if the T/R=Receive in the 1553B command word.

f. The SCC–based FSWS shall allow a minimum of 100 μsecs for a possible re–transmission before routing the C&T RT stored message content for subsequent processing and also route it in sufficient time before the next possible message overwrites this data.

g. The SCC–based FSWS shall store data for transmission to the CTIU in memory accessible to C&T RT prior to minor cycle N–1 when the data is expected to be gathered in minor cycle N and not overwrite that memory until minor cycle N+1 has occurred.

[2] The SCC–based FSWS shall perform memory loads as specified in DFCB, IS2008658.

[3] IMOK Message:

a. The receipt of an C&DHS safe mode command issued by the active CTIU shall be interpreted by the active SCC–based FSWS that the CTIU did not receive the SCC OK message in more than 2.048 seconds.

b. The absence of the IMOK message shall cause the active SCC–based FSWS to issue safe mode commands.

[4] Synchronization with active CTIU minor cycle.

a. The SCC–based FSWS shall maintain synchronization to the active CTIUs minor cycle.

b. Upon receipt of the synchronize with data word mode code command, the SCC–based FSWS shall (a) adjust it leading edge of its minor cycle if required and (b) compare its major/minor cycle count with the one in the data word and use the one in the data word if there is a difference.

[5] The SCC–based FSWS shall use the C&DHS provided standard time service.

[6] The SCC–based FSWS shall conform to the memory load and memory dump conventions specified in Sections 5 and 6 of the DFCB, IS20008658.

[7] The SCC–based FSWS shall sample and route H/K telemetry and H&S telemetry to the C&T RT.

3.2.1.4.1.3 Output

Nominally, a 1553B response is always a status word and additional 1553B data words as required.

a. H/K telemetry

b. H&S telemetry

c. Diagnostic

d. Loop–back

e. 1553B mode code response

3.2.1.5 CTIU Firmware

[1] The CTIU firmware shall use the bus utilization table.

[2] The CTIU firmware shall interface with the following electronic interfaces:

a. serial I/O interfaces between the SCC and CTIU

b. C&T bus as a BC and a RT

c. LRS bus as a RT

d. S–band transponder interfaces.

[3] The CTIU firmware shall interface with the CTIU hardware specified in the CTIU Component Specification, PS20008569.

[4] The CTIU firmware shall validate uplink command data transfer by implementing the FARM as specified in DFCB, IS20008658.

[5] The CTIU firmware shall only perform functions commensurate with its operational state.

[6] The CTIU firmware shall enable/disable all CTIU autonomous functions upon command.

[7] The CTIU firmware shall maintain the master Spacecraft clock.

[8] The CTIU firmware shall accept, decode and distribute command data transfers.

[9] The CTIU firmware shall deliver command data transfers it receives for other Spacecraft equipment.

[10] The CTIU firmware shall execute CTIU commands contained in command data transfers or in C&T bus messages as specified in Appendix I of the C&DH Spec (PS20008567).

[11] The CTIU firmware shall support data sampling by the BDUs by delivering the BDU sample schedule tables.

[12] The CTIU firmware shall perform data gathering by delivering the data gather requests.

[13] The CTIU firmware shall format and distribute the gathered data.

[14] The CTIU firmware shall generate CTIU telemetry as specified in Appendix II of the C&DH Spec (PS20008567).

[15] The CTIU firmware shall generate time code message and deliver it to designated recipients.

[16] The CTIU firmware shall generate the synchronize with data word mode and deliver it to designated recipients.

[17] The CTIU firmware shall (a) accept the ancillary data packet from the SCC–based FSWS, (b) deliver the ancillary data packet and (c) distribute the ancillary data packet for inclusion in the low–rate science data stream.

[18] The CTIU firmware shall (a) accept the SCC OK message from the SCC–based FSWS (b) process the message and (c) deliver the IM OK messages or if sufficient time has elapsed since the last SCC OK was received perform C&DHS safe mode commanding.

[19] The CTIU firmware shall generate safe mode commands and deliver the safe mode commands upon command.

[20] The CTIU firmware shall be capable of doing memory loads per the conventions specified in DFCB, IS20008658.

[21] The CTIU firmware shall support memory dump gathering of other Spacecraft equipment per the conventions specified in DFCB, IS20008658.

[22] The CTIU firmware shall be capable of dumping its memory on command.

[23] The CTIU firmware shall execute a predetermined procedure upon receipt of CTIU reset commands.

[24] The CTIU firmware shall provide status information which includes periodic fault detection data in telemetry.

[25] The CTIU firmware shall support the CTIU OK timer.

[26] Upon command, the CTIU firmware shall implement pre–planned diagnostic procedures which includes check–out and FDIR procedures.

[27] The CTIU firmware shall gather the PN epoch data for inclusion in telemetry.

[28] The CTIU firmware shall gather the Doppler measurement data for inclusion in telemetry.

[29] The CTIU firmware shall support the switch–over to the CTIUs internal crystal oscillator as part of the time services.

3.2.1.6 Operational Support

3.2.1.6.1 Memory Loading/Dumping

[1] All memory loads shall be verified by CRC. The FSWS shall respond in telemetry with a CRC Pass/Fail indication and an identifier to associate it with the data set.

[2] The CRC shall be applied at the data set level which may consist of multiple transfer frames.

[3] Ephemeris data shall require the following handling before use. Other data shall also require this handling .

a. A ground verification indicator shall be associated with this data. This indicator is set by the ground to confirm ground verification. The data shall not be used if the indicator is not set.

b. A continuity check with the previous data set shall be performed. Failure of the continuity check shall prevent use of the data.

c. A time span shall be associated with the data set, which defines when the data is valid. The FSWS shall only use the data when S/C time is within this time span.

[4] The FSWS shall perform load and dump by table name and segment within a table.

[5] Dumps shall include a label which is either provided as part of the dump command or defaults to the table and segment name of the data source, or defines starting and ending address.

[6] Data dump gathering rate shall be specified by a parameter within the dump command.

3.2.1.6.2 System Tables

[1] The FSWS shall maintain system data tables in a logical organization (including frequency of update).

[2] The FSWS shall enforce a standard format for all data types (e.g. numerical, logical).

[3] The FSWS shall not translate operator input into some other format, or apply adjustments which change the effect of operator entered data (e.g. scaling).

[4] The FSWS shall store dynamic values in separate working data areas, not within system tables.

[5] System tables shall be modifiable by realtime, absolute and relative time commands. (Absolute and relative time commands are restricted to a maximum of two data words)

[6] Limit checks shall be performed to prevent overwrite of data beyond intended boundaries.

[7] The FSWS shall prevent data update while the table is in use by operational software.

3.2.1.6.3 Command and Data Handling

[1] Command interpretation shall be consistent through all Spacecraft modes.

[2] Non primary (redundant) components shall be commandable if powered on (to be defined on a case by case basis).

[3] The FSWS shall process commands as Executive Requests, which create a software interrupt and are processed on receipt.

[4] The FSWS shall retain the most recent uplinked transfer frame if received in error, and dump content on request

[5] The FSWS shall enforce a minimum separation of 110 milliseconds between relay drive commands issued to any BDU.

[6] Software control commands (to the subsystems) shall use the same command format as uplinked realtime commands.

[7] The software shall not translate ground commands into new commands on–orbit. Each command shall be distinct – not adjustable by system table values.

[8] Critical commands shall be defined to be two–command sequences to guard against inadvertent use.

3.2.2 Guidance, Navigation, and Control (GN&C) Subsystem Software Requirements

3.2.2.1 GN&C Software External Interfaces

The C&DHS will provide an estimate of UTC time accurate to ± 100 microseconds.

C&DHS will provide the communications medium between the GN&CS Flight Software, exclusive of the Safe Mode software, and all the Spacecraft components with which the GN&C Flight Software interacts. The medium will consist of the Command and Telemetry (C&T) Bus and associated Bus Data Units (BDUs) as defined in IS20008501. The C&T Bus is a bi–directional serial data channel whose use must be time shared. The GN&C Flight Software shall accommodate the traffic allocation defined below.

The C&DHS will allocate a periodic time slot for each transaction between a BDU and a Spacecraft component. The BDU shall accommodate subsystem serial commands that are based on 16 bit boundaries ((**TBD–5**)) awaiting component level design).

C&DHS interface timing is defined in 8–millisecond minor cycles, numbered from 0 through 127. The GN&C Flight software shall accommodate the allocation depicted in Table III to collect measurement data. The GN&C Flight Software shall accommodate the allocation depicted in Table IV to distribute commands.

Table III. C&DHS Traffic Allocation to Collect Measurement Data for GN&C Flight Software

Component/ location of BDU	Measurement	Data collection volume	Repetition interval, minor cycles	Data crosses component–C&DH interface at fixed times relative to start of reference Minor Cycle i in the ranges listed		Time at which complete measurement is available to GN&C Flight Software, relative to start of reference Minor Cycle i
				After start of Minor Cycle	Before start of Minor Cycle	By start of Minor Cycle
ACE/GN&C EM	IRU $\Sigma(\Delta\phi$ pulses)	18 bytes	16	i + 0	i + 2	i + 5
ACE/GN&C EM	RWA Σ(tach pulses)	8 bytes	64	i + 0	i + 2	i + 5
ESA 1/EPS EM	E&H error	4 analogs	64	i + 0	i + 1	i + 4
ESA 2/EPS EM	E&H error	4 analogs	64	i + 0	i + 1	i + 4
FSS/EPS EM	Sun angles	4 bytes	64	i + 0	i + 1	i + 4
TAM 1/GN&C EM	Field strength	3 analog	64	i + 0	i + 1	i + 4
TAM 2/GN&C EM	Field strength	3 analog	64	i + 0	i + 1	i + 4
HGA/HGA[1]	Gimbal angles	8 bytes	8	i + 4	i + 5	i + 7
TDRSS transponder 1/ COMS & C&DHS EM	Dopper frequency sums	8 bytes	128	i + 0	i + 1	i + 4
TDRSS transponder 2/ COMS & C&DHS EM	Dopper frequency sums	8 bytes	128	i + 0	i + 1	i + 4

[1] HGA contains a Remote Terminal which is functionally equivalent to a BDU.

Table III. C&DHS Traffic Allocation to Collect Measurement Data for GN&C Flight Software (Continued)

Component/ location of BDU	Measurement	Data collection volume	Repetition interval, minor cycles	Data crosses component–C&DH interface at fixed times relative to start of reference Minor Cycle i in the ranges listed		Time at which complete measurement is available to GN&C Flight Software, relative to start of reference Minor Cycle i
				After start of Minor Cycle	Before start of Minor Cycle	By start of Minor Cycle
TDRSS transponder 1/ COMS &C&DHS EM	Ancillary data	5 bytes	128	i + 0	i + 1	i + 4
TDRSS transponder 2/ COMS & C&DHS EM	Ancillary data	5 bytes	128	i + 0	i + 2	i + 5
TDRSS transponder 1/ COMS & C&DHS EM	PN epoch time	5 bytes	1,280	i + 1	i + 2	i + 5
TDRSS transponder 2/ COMS & C&DHS EM	PN epoch time	5 bytes	1,280	i + 1	i + 2	i + 5
SADE/ COMS & C&DH EM	Array angle	1 analog	64	i + 1	i + 2	i + 5

Table IV. C&DHS Traffic Allocation to Distribute Commands for GN&C Flight Software

Component/ location of BDU	Command	Command data volume	Repetition interval, minor cycles	Data crosses component–C&DH interface at fixed times relative to start of reference Minor Cycle i in the ranges listed		Time by which GN&C Flight Software shall format command, relative to start of reference Minor Cycle i
				After start of Minor Cycle	Before start of Minor Cycle	Not later than start of Minor Cycle
ACE/GN&C EM	RWA torque	4 16–bit words	64	i + 0	i + 1	i – 4
ACE/GN&C EM	TAM drive	3 16–bit words	64	i + 1	i + 2	i – 3
SSST 1/GN&C EM	Acquisition	21 16–bit words	640	i + 3	i + 7	i – 1
SSST 2/GN&C EM	Acquisition	21 16–bit words	640	i + 7	i + 11	i + 3
HGA/HGA[1]	Drive	4 16–bit words	64	i + 0	i + 1	i – 4
TDRSS transponder 1/COMS & C&DHS EM	Time of day	5 16–bit words	1,280	i + 0	i + 1	i – 4
TDRSS transponder 2/COMS & C&DHS EM	Time of day	5 16–bit words	1,280	i + 0	i + 1	i – 4
TDRSS transponder 1/COMS & C&DHS EM	Doppler correction	1 16–bit word	1,280	i + 0	i + 1	i – 4
TDRSS transponder 2/COMS & C&DHS EM	Doppler correction	1 16–bit word	1,280	i + 0	i + 1	i – 4
PMEA/PROPS EM	Thruster fire	10 16–bit words, followed by an "execute" pulse	64	i – 2	i + 1	i – 6
SADE/COMS & C&DHS EM	Array drive	1 16–bit word	1024	i + 1	i + 2	i – 3

[1] HGA contains a Remote Terminal which is functionally equivalent to a BDU.

3.2.2.2 Attitude Determination and Control (ADAC) Software

3.2.2.2.1 ADAC Mode and Sequence Control

The ADAC Mode and Sequence Control shall perform the following modes:

a. Earth Acquisition Mode

b. Normal Mode

c. Orbit Adjust Mode.

3.2.2.2.1.1 Earth Acquisition Mode

[1] The FSW shall respond to the Separation flag to enter Earth Acquisition Mode, assigning sensors and effectors as required to acquire the local vertical (Local Vertical Acquisition submode), and to acquire yaw (Yaw Gyrocompass submode).

[2] The FSW shall respond to the command to enter Update Filter submode, assigning sensors as required to acquire a stellar–inertial attitude reference.

3.2.2.2.1.2 Normal Mode

[1] The FSW shall respond to the commands to enter Normal Mode, acquire an inertial attitude reference (Stellar Acquisition), and use the Update Filter output as the attitude reference.

[2] The FSW shall respond to the command to enter Update Filter Earth Pointing submode (upon convergence of the Update Filter).

[3] While in Update Filter Earth Pointing submode, the FSW shall respond to commands to offset–point the Spacecraft (Update Filter Offset Pointing submode).

3.2.2.2.1.3 Orbit Adjust Mode

[1] The FSW shall respond to commands to enter Orbit Adjust mode.

[2] The FSW shall support the capability to maintain three–axis control (with pointing offset capability) of the Spacecraft during orbit acquisition burns, during periodic drag make–up burns, and during inclination correction burns; and, upon termination of the maneuver, return to the previous GN&CS mode.

[3] The FSW shall support the capability to slew to any yaw angle prior to the start of the maneuver.

[4] At the end of a ΔV sequence, the FSW shall autonomously return to the previous mode.

[5] If the previous mode was Normal Mode, the FSW shall return to the Stellar Acquisition submode.

3.2.2.2.2 Update Filter

[1] Data from the SSST and/or FSS shall be used to estimate and correct attitude determination and gyro bias compensation errors.

[2] The normal mode of the update filter shall employ data from the SSSTs.

[3] Capability shall be provided to process data from the FSS as a backup.

[4] Attitude Determination shall use Navigation System lunar ephemeris data to determine when the moon is in the field of view of a star tracker.

[5] Attitude Determination shall use Navigation System solar ephemeris data for fine sun sensor data processing (TBD–6) [dependent upon accuracy of data].

3.2.2.2.2.1 Update Filter Inputs

a. SSST data

b. FSS data

c. Spacecraft inertial attitude (as derived from integrating the IRU data)

d. Body rates

e. Solar position

f. Lunar position

3.2.2.2.2.2 Update Filter Description

[1] The Update Filter shall be a Kalman filter which shall compute attitude errors using star sensor and sun sensor data, sun position data, and a stored star catalog.

[2] The EOS mission shall require the storage of information on no more than 700 stars in the update filtering star catalog.

[3] The Update Filter software shall provide precession computations on the stellar positions in order to avoid the requirement for frequent uplinking of stellar data.

[4] Star catalog data shall not be used unless it has been verified by the ground (as determined via a verification indicator).

3.2.2.2.2.3 Update Filter Outputs

a. Spacecraft inertial attitude update.

b. Gyro rate bias update.

3.2.2.2.3 Gyro Data Processing

[1] Gyro Data Processing shall perform the following functions:

a. Pre–filter gyro information and convert from raw values to attitude rates.

b. Integrate attitude rates to propagate Spacecraft attitude knowledge.

3.2.2.2.3.1 Gyro Data Processing Inputs

a. IRU $\Sigma(\Delta\phi$ pulses)

b. Spacecraft inertial attitude update.

c. Gyro rate bias update.

3.2.2.2.3.2 Gyro Data Processing Description

[1] Gyro data from the IRU shall be optionally pre–filtered every 0.128 second to remove undesirable aliasing effects which can result from a discrete time control cycle (0.512 sec).

[2] Pre–filtered gyro data shall be converted from raw values to attitude rates every 0.512 seconds.

[3] These attitude rates shall be corrected for gyro misalignments and applied with scale factors.

[4] Bias compensation, including bias error estimates from the Update Filter, shall be applied to the corrected attitude rates.

[5] The corrected attitude rates shall then be integrated to propagate Spacecraft attitude knowledge.

3.2.2.2.3.3 Gyro Data Processing Outputs

a. Inertial Attitude

b. Attitude Rates

c. Ancillary Data for use by payload instruments

3.2.2.2.4 Desired Attitude

[1] The Desired Attitude shall be the zero–reference computed from the Spacecraft position and velocity as determined by the Navigation function plus optional attitude offset.

[2] Attitude Determination and Control shall autonomously transition to the backup EOS ephemeris when Navigation Filters fails to provide an accurate attitude reference.

a. The criteria for transitioning to the backup EOS ephemeris shall be based on a voting scheme among the Navigation System, the ESA, and the backup ephemeris.

b. Transitioning to the use of the backup EOS ephemeris shall not cause entry into Safe Mode.

3.2.2.2.4.1 Desired Attitude Inputs

a. Spacecraft position and velocity

b. Selected offsets

3.2.2.2.4.2 Desired Attitude Description

[1] The Desired Attitude calculation shall provide the capability to define a desired attitude for the Spacecraft.

[2] Capability to support offset pointing and yaw slews shall be provided as detailed below.

[3] The Desired Attitude calculation shall provide the capability to add offsets to the desired attitude in support of instrument calibrations.

3.2.2.2.4.3 Desired Attitude Outputs

a. Desired Spacecraft attitude

b. Desired attitude rates

3.2.2.2.5 Spacecraft Attitude Correction

[1] Spacecraft Attitude Correction shall provide the logic for determining Spacecraft attitude corrections based on the input of Spacecraft attitude error, and rate data.

[2] The Spacecraft Attitude Correction shall then provide torque commands for the RWAs or torque requests to the Thruster Command as appropriate.

3.2.2.2.5.1 Spacecraft Attitude Correction Inputs

a. Attitude rates

b. Inertial attitude

c. Desired spacecraft attitude

d. Slew requests

e. ESA data

f. RWA tachometer data

g. Magnetic torque compensation signal

h. HGA motion compensation signal

3.2.2.2.5.2 Spacecraft Attitude Correction Description

[1] Spacecraft Attitude Correction shall determine the roll, pitch, and yaw axis attitude errors (differences between the desired and measured Spacecraft attitudes).

[2] Spacecraft Attitude Correction shall generate reaction wheel commands to implement Spacecraft movement towards the desired attitude.

[3] The selection of sensors and control laws shall be as directed by the GN&C Mode and Sequence Control.

[4] Capability shall be provided to drive the desired attitude to perform the 90 degree and 180 degree yaw maneuvers required for orbit adjust.

[5] Slews shall be performed in conjunction with ΔV maneuvers in response to requests received via stored commands.

[6] Capability shall be provided to apply compensating torques to the reaction wheels to minimize the disturbances due to magnetic unloading, HGA motion, and gyroscopic torques.

[7] In modes requiring thruster control, orthogonal control torque requests shall be provided for the Thruster Command.

3.2.2.2.5.3 Spacecraft Attitude Correction Outputs

a. Reaction wheel commands

b. Orthogonal control torque requests

3.2.2.2.6 High Gain Antenna Control

The High Gain Antenna (HGA) Control determines the HGA azimuth and elevation rotation angles required to point the HGA toward the selected TDRSS Spacecraft and generates the commands to rotate the HGA. The HGA Control also estimates the torque on the spacecraft due to the motion of the HGA; this estimate is used to compensate for the disturbance which would otherwise result.

3.2.2.2.6.1 High Gain Antenna Control Inputs

a. Tracking schedule

b. TDRS ephemerides

c. Spacecraft position

d. Spacecraft inertial attitude

e. HGA gimbal angles.

3.2.2.2.6.2 High Gain Antenna Control Description

[1] The HGA control software shall perform the following functions:

a. Monitor the HGA position and assure that its motion constraints are honored.

b. Monitor the HGA position and provide notification when the HGA points in a direction where RF emissions are not allowed.

c. Determine the command profile to move the HGA to the desired position.

d. Apply rate limits as required to minimize disturbances.

e. Generate the commands to rotate the HGA.

f. Calculate the disturbance torque on the spacecraft that will result from the commanded HGA motion.

[2] FSW shall provide the capability to apply offsets to High Gain Antenna pointing via a command bias.

3.2.2.2.6.3 High Gain Antenna Control Outputs

a. HGA drive commands

b. Flag to inhibit RF transmission

c. HGA motion compensation signal

3.2.2.2.7 Momentum Unloading

[1] The Momentum Unloading shall control unloading of either momentum stored in the reaction wheels or total system Momentum.

[2] Momentum Unloading shall be an independent function which shall be available in any of the GN&C control modes except orbit adjust.

[3] This function shall process inputs to generate commands which will allow the Momentum to be unloaded.

[4] The primary means of unloading momentum utilizes magnetic fields from the Magnetic Torque Rods; however a backup method utilizing thrusters shall also be available. The Momentum Unloading also estimates the torque on the spacecraft due to the magnetic field of the MTRs; this is used to compensate for the disturbance which would otherwise result.

3.2.2.2.7.1 Momentum Unloading Inputs

a. Magnetometer data

b. Reaction wheel tachometer data.

c. Total system momentum.

3.2.2.2.7.2 Momentum Unloading Description

[1] The flight software shall support unloading of the excess momentum stored in the reaction wheels.

[2] There shall be two techniques provided: magnetic unloading for normal operation, and thruster unloading for backup or coping with unexpectedly high disturbance torques.

[3] When this function is performed during normal Earth pointing using only magnetic torquers, there shall be no adverse effects on the precision pointing accuracies of the Normal Mode.

[4] Magnetic torquer unloading shall be continuous.

[5] The Magnetic Torque Rod commands required to control the angular momentum shall be generated using reaction wheel momentum data, magnetometer data, total system momentum data and momentum bias data.

[6] The Magnetic Torque Rods create torques so that the wheels are required to be driven in a direction to reduce the excess angular momentum stored.

[7] If enabled, thruster unloading shall occur when the momentum of a wheel reaches the specified threshold or when the wheel momentum in the spacecraft body frame reaches a specific threshold.

[8] The appropriate thruster command requests shall be generated using either the reaction wheel momentum data or the wheel momentum resolved into the body frame.

[9] Thruster firings shall occur at the specified rate with each firing reducing wheel momentum in the body frame by a specified percentage.

[10] Thruster unloading shall be completed when the wheel momentum in the body frame reaches a specified limit .

3.2.2.2.7.3 Momentum Unloading Outputs

a. Magnetic torquer commands

b. Magnetic torque compensation signal

c. Thruster unload torque requests

d. Ancillary Data for use by payload instruments

3.2.2.2.8 Solar Array Drive Control

[1] The Solar Array Drive Control shall provide closed–loop control of the solar array position, and shall provide a commandable slew capability.

3.2.2.2.8.1 Solar Array Drive Control Inputs

a. Solar array drive position data

b. Solar position

c. Inertial attitude

3.2.2.2.8.2 Solar Array Drive Control Description

[1] The Solar Array Drive Control shall perform the following functions:

a. Read the solar array potentiometer position and transform the current solar array position into Spacecraft coordinates.

b. Command the solar array either with a constant rate uplinked from the Ground Segment or

c. Calculate the required array position from the sun position input and adjust the commanded rate to track the sun.

d. Command slews as required.

[2] FSW shall provide the capability to apply offsets to Solar Array pointing via a commanded bias..

3.2.2.2.8.3 Solar Array Drive Control Outputs

a. Solar Array Drive Rate Commands

3.2.2.2.9 Thruster Command

3.2.2.2.9.1 Thruster Command Inputs

a. Delta–V requests

b. Orthogonal control torque requests

c. Thruster unload torque requests

3.2.2.2.9.2 Thruster Command Description

[1] The Thruster Command shall compute thruster on–times for all ΔV maneuvers. These on–times include ΔV firing and attitude control firing.

[2] The thruster commands for ΔV burns shall be based on requests received via stored commands.

[3] The Thruster Command shall select appropriate combinations of thrusters and compute thruster on–times for attitude control based on orthogonal control torque requests from Spacecraft Attitude Correction.

[4] The Thruster Command shall compute thruster on–times for Spacecraft slew maneuvers, including those required for earth acquisition based on orthogonal control torque requests from Spacecraft Attitude Correction.

[5] The Thruster Command shall select appropriate combinations of thrusters and compute thruster on–times for backup momentum unloading based on thruster unload requests from Momentum Unloading.

3.2.2.2.9.3 Thruster Command Outputs

a. Delta–V Thruster on–time commands

b. Attitude Control Thruster on–time commands

3.2.2.2.10 Fault Detection and Correction (FD&C) Algorithms

The GN&C Failure Detection Isolation and Recovery (FDIR) software shall provide protection against any single point failure which could cause loss of attitude control. The FDIR software shall monitor the status of the GN&C system and command the spacecraft to a safe configuration which does not use the hardware or software identified to be faulty.

3.2.2.2.10.1 GN&C FDIR Modes

The FDIR software shall perform processing which is dependent on the GN&C control modes and also performs processing which is not mode dependent.

3.2.2.2.10.1.1 Mode Independent FDIR

The mode independent FDIR software shall perform processing which is common to all mode specific FDIR.

[1] Mode switching and initialization failure detection

[2] FDIR logic disable during GN&C Safe Mode

[3] Component failure detection and switching logic

[4] Safe Mode configuration logic

Mode independent FDIR input data

[1] GN&C mode

[2] Reaction wheel tach data

[3] IRU data

Mode independent FDIR output data

[1] Safe Mode Configuration

[2] Component selection data

3.2.2.2.10.1.2 Acquisition Mode FDIR

The FDIR shall perform processing which is unique for the Acquisition mode. The FDIR shall process sensor data and execute logic to isolate any GN&C hardware or software failure. The software shall generate the commands to remove any component which has been identified as failed from the GN&C control system processing.

Acquisition Mode FDIR input data

[1] Earth sensor data

[2] IRU data

[3] Attitude and rate thresholds

Acquisition Mode FDIR output data

[1] Command Safe Mode configuration

[2] Component selection data used for control algorithms

3.2.2.2.10.1.3 Normal Mode FDIR

The FDIR shall perform processing which is unique for the Normal mode. The FDIR shall process sensor data, and GN&C software estimates of spacecraft attitude error and execute logic to isolate any GN&C hardware or software failure. The software shall generate the commands to remove any component which has been identified as failed from the GN&C control system processing.

Normal Mode FDIR input data

[1] Earth sensor data

[2] IRU data

[3] GN&C software generated estimated attitude error.

[4] Attitude and rate thresholds

Normal Mode FDIR output data

[1] Command Safe Mode configuration

[2] Component selection data used for control algorithms

3.2.2.2.10.1.4 Orbit Adjust Mode FDIR

The FDIR shall perform processing which is unique for the Orbit Adjust mode. The FDIR shall process sensor data and execute logic to isolate any hardware or software failure. The software shall generate the commands to remove any component which has been identified as failed from GN&C control system processing.

Orbit Adjust Mode FDIR input data

[1] Earth sensor data

[2] IRU data

[3] GN&C software generated estimated attitude error

[4] Attitude and rate thresholds.

Orbit Adjust Mode FDIR output data

[1] Command Safe Mode configuration

[2] Component selection data used for control algorithms.

3.2.2.2.10.2 Solar Array Drive Failure Detection Isolation and Recovery

The Solar array drive Failure Detection Isolation and Recovery software shall monitor and detect failures in the SAD system. The SAD FDIR shall be enabled via ground commands.

The SAD FDIR shall be disabled by ground command or the detection of a failure of a solar array drive potentiometer.

Issue commands to the redundant solar drive electronics.

SAD FDIR inputs

[1] Solar array potentiometer data

[2] Solar array drive commanded rate data

SAD FDIR outputs

[1] Commands to enable the redundant drive electronics

[2] Provide indication of a detected failure

3.2.2.2.10.3 High Gain Antenna Gimbal Drive Failure Detection and Correction

The HGA FDIR shall perform the processing to detect failures in the HGA gimbal drive mechanism. The HGA FDIR shall be enabled via ground command.

High Gain Antenna gimbal FDIR inputs

[1] Azimuth and Elevation gimbal data

[2] Gimbal drive position commands

[3] HGA mode of operation

[4] Gimbal position error thresholds

High Gain Antenna gimbal FDIR outputs

[1] Indication that gimbal angle errors have exceeded thresholds

3.2.2.3 Navigation Software

[1] Navigation software shall compute the following real–time data

a. Position vector for the sun.

b. Position vector for the moon.

c. Position and velocity vector for the scheduled TDRS.

d. Position and velocity vector for EOS.

e. Doppler frequency prediction for the S–band transponder.

f. Accumulated spacecraft clock time bias with respect to UTC.

[2] Navigation Software shall perform fault detection, isolation, and recovery.

3.2.2.3.1 Astrodynamic Processing

Astrodynamic Processing computes real–time position vectors for the sun and the moon.

3.2.2.3.1.1 Astrodynamic Processing Inputs

a. Spacecraft clock time.

3.2.2.3.1.2 Astrodynamic Processing Description

[1] Astrodynamic Processing shall convert spacecraft clock time to Julian date.

[2] Astrodynamic Processing shall compute the geocentric position vector for the sun.

[3] Astrodynamic Processing shall compute the geocentric position vector for the moon.

[4] Astrodynamic Processing shall update Earth inertial coordinate system transformations.

3.2.2.3.1.3 Astrodynamic Processing Outputs

a. Real–time position vector for the sun.

b. Real–time position vector for the moon.

c. Earth inertial coordinate system transformations.

3.2.2.3.2 TDRS Propagation

TDRS Propagation computes near–real–time position and velocity vectors for the scheduled TDRS. State vectors are uplinked daily for four TDRSs.

3.2.2.3.2.1 TDRS Propagation Inputs

a. Four initial TDRS state vectors and associated time tags.

b. Scheduled TDRS identification.

c. Spacecraft clock time.

3.2.2.3.2.2 TDRS Propagation Description

[1] TDRS Propagation shall propagate TDRS position and velocity vectors by numerically integrating equations of motion.

[2] TDRS Propagation shall use a propagation time step of 8.192 spacecraft clock seconds when Doppler measurements are being processed by "Navigation Filter".

[3] TDRS Propagation shall use a propagation time step of 65.536 spacecraft clock seconds otherwise for all TDRSs.

3.2.2.3.2.3 TDRS Propagation Outputs

a. Near–real–time position and velocity vectors for the scheduled TDRS.

3.2.2.3.3 Navigation Filter

Navigation Filter computes near–real–time position and velocity vectors for EOS. Navigation Filter also computes the real–time master oscillator frequency error and the real–time accumulated spacecraft clock time bias with respect to UTC.

3.2.2.3.3.1 Navigation Filter Inputs

a. Flag to indicate navigation filter initialization, initial navigation filter state vector, associated state error covariance matrix, and time tag.

b. Spacecraft clock calibration flag and calibration data.

c. EOS drag makeup maneuver flag, maneuver start time and stop time, and thrust force.

d. Master oscillator frequency adjust flag, adjust time, and frequency adjustment.

e. Infrequently uplinked solar activity.

f. Doppler frequency sums and associated S–Band transponder telemetry.

g. Scheduled TDRS identification.

h. Spacecraft clock time.

3.2.2.3.3.2 Navigation Filter Description

[1] Navigation Filter shall estimate a state vector which includes, as a minimum, the following elements:

a. EOS position vector.

b. EOS velocity vector.

c. Drag coefficient correction.

d. Master oscillator frequency error.

[2] If the initialize flag is set, Navigation Filter shall initialize the state vector and associated state error covariance matrix using ground uplinked data.

[3] Navigation Filter shall maintain an estimate of the accumulated spacecraft clock time bias with respect to UTC.

[4] If the spacecraft clock calibration flag is set, Navigation Filter shall reset the accumulated spacecraft clock time bias to the uplinked calibration value, including UTC leap seconds.

[5] Navigation Filter shall propagate the state vector and state error covariance matrix.

[6] Navigation Filter shall use a propagation time step of 8.192 spacecraft clock seconds.

[7] Navigation Filter shall propagate the state vector and state error covariance matrix whether or not a Doppler measurement is available.

[8] Navigation Filter shall propagate EOS position and velocity vectors by numerically integrating equations of motion.

[9] Navigation Filter shall model drag makeup accelerations and acceleration uncertainties.

[10] Navigation Filter shall model master oscillator frequency adjustments and frequency adjustment uncertainties.

[11] Navigation Filter shall sample S–band transponder Doppler frequency sums every 8.192 seconds.

[12] Navigation Filter shall process two successive S–band transponder Doppler frequency sums to compute a Doppler measurement.

[13] Navigation Filter shall sample S–band transponder telemetry every 1.024 seconds.

[14] Navigation Filter shall reject Doppler measurements and set a flag if S–band transponder telemetry indicates invalid data, or if the Doppler measurement exceeds a maximum allowable value (a range check).

[15] Navigation Filter shall estimate Doppler measurements.

[16] Navigation Filter shall compute Doppler measurement residuals, Doppler measurement residual variances, and Doppler measurement residual ratios.

[17] Navigation Filter shall reject Doppler measurements that fail an n–sigma measurement residual edit test.

[18] If the Doppler measurement is accepted, Navigation Filter shall

a. compute the Kalman gain matrix,

b. correct the state vector estimate, and

c. update the state error covariance matrix.

3.2.2.3.3.3 Navigation Filter Outputs

a. State vector.

b. State error covariance matrix.

c. Accumulated spacecraft clock time bias with respect to UTC.

d. Doppler measurement edit flag.

e. Engineering telemetry for ground analysis.

3.2.2.3.4 Real–Time Interface

Real–Time Interface computes real–time position and velocity vectors for EOS, real–time position and velocity vectors for the scheduled TDRS, and the real–time Doppler frequency prediction for the S–band transponder.

3.2.2.3.4.1 Real–Time Interface Inputs

a. Near–real–time EOS position and velocity vectors from "Navigation Filter".

b. Near–real–time TDRS position and velocity vectors from "TDRS Propagation".

c. Real–time master oscillator frequency from "Navigation Filter".

d. Doppler frequency prediction flag for the S–band transponder.

3.2.2.3.4.2 Real–Time Interface Description

[1] Real–Time Interface shall propagate EOS position and velocity vectors to real–time, every 0.512 spacecraft clock seconds.

[2] Real–Time Interface shall propagate the scheduled TDRS position and velocity vectors to real–time, every 0.512 spacecraft clock seconds.

[3] If the Doppler compensation predict flag is set, Real–Time Interface shall compute the Doppler frequency prediction for TDRSS S–Band signal acquisition, every 1.024 spacecraft clock seconds.

3.2.2.3.4.3 Real–Time Interface Outputs

a. Real–time position and velocity vector for EOS.

b. Real–time position and velocity vector for the scheduled TDRS.

c. Real–time Doppler frequency prediction for the S–band transponder.

d. Ancillary Data for use by payload instruments.

3.2.2.3.5 Orbit Element Conversion

Orbit Element Conversion computes real–time position and velocity vectors for EOS from periodically uplinked EOS orbit elements. Orbit Element Conversion also computes real–time position and velocity vectors for the scheduled TDRS from periodically uplinked TDRS orbit elements. Depending upon the spacecraft mode, Orbit Element Conversion position and velocity vectors can be used as primary or backup navigation data.

3.2.2.3.5.1 Orbit Element Conversion Inputs

a. Epoch orbit elements for EOS and associated epoch time tag.

b. Epoch orbit elements for four TDRS's and associated epoch time tags.

c. Scheduled TDRS identification.

d. Spacecraft clock time.

3.2.2.3.5.2 Orbit Element Conversion Description

[1] Orbit Element Conversion shall compute current orbit elements for EOS, then convert the orbit elements to position and velocity vectors for EOS.

[2] Orbit Element Conversion shall compute current orbit elements for the scheduled TDRS, then convert the orbit elements to position and velocity vectors for the scheduled TDRS.

3.2.2.3.5.3 Orbit Element Conversion Outputs

a. Real–time position and velocity vectors for EOS.

b. Real–time position and velocity vectors for the scheduled TDRS.

3.2.2.3.6 Fault Detection, Isolation, and Recovery (FDIR)

Fault Detection, Isolation and Recovery compares "Navigation Filter" data and "TDRS Propagation" data with less accurate backup data. Doppler measurement data and navigation filter covariance matrix data is also examined. Uplinked ephemeris data is also verified before use.

3.2.2.3.6.1 Fault Detection, Isolation, and Recovery Inputs

a. "Navigation Filter" state vector and state error covariance matrix.

b. "Orbit Element Conversion" position and velocity vectors for EOS.

c. "TDRS Propagation" position and velocity vectors for the scheduled TDRS.

d. "Orbit Element Conversion" position and velocity vectors for the scheduled TDRS.

e. Backup polynomial representation of spacecraft clock time bias and master oscillator normalized frequency error.

f. Doppler measurement residual ratios Doppler measurement edit flags.

g. Scheduled TDRS identification.

h. Spacecraft clock time.

3.2.2.3.6.2 Fault Detection, Isolation, and Recovery Description

[1] Fault Detection, Isolation, and Recovery shall compute the difference between

a. "Navigation Filter" EOS position and velocity vectors, and

b. "Orbit Element Conversion" EOS position and velocity vectors, then

c. Set a flag(s) if the difference exceeds the accuracy of the "Orbit Element Conversion" EOS position and velocity vectors.

[2] Fault Detection, Isolation, and Recovery shall compute the difference between

a. "TDRS Propagation" scheduled TDRS position and velocity vectors, and

b. "Orbit Element Conversion" scheduled TDRS position and velocity vectors, then

c. Set a flag(s) if the difference exceeds the accuracy of the "Orbit Element Conversion" scheduled TDRS position and velocity vectors.

[3] Fault Detection, Isolation, and Recovery shall compute the difference between

a. "Navigation Filter" accumulated spacecraft clock time bias and master oscillator normalized frequency error, and

b. Backup polynomial representation of the accumulated spacecraft clock time bias and master oscillator normalized frequency error, then

c. Set a flag(s) if the difference exceeds the accuracy of the backup polynomial representation of the accumulated spacecraft clock time bias and master oscillator normalized frequency error.

[4] Fault Detection, Isolation, and Recovery shall maintain a count of edited Doppler measurements, per TDRS, and set a flag(s) if the count exceeds a pre–specified value.

[5] Fault Detection, Isolation, and Recovery shall set a flag(s) if navigation filter covariance elements exceed pre–specified values.

[6] Fault Detection, Isolation, and Recovery shall verify uplinked EOS and TDRS ephemeris data, and the uplinked polynomial representation of the spacecraft clock time bias and master oscillator normalized frequency error as follows:

a. A ground verification indicator shall be associated with this data. This indicator is set by the ground to confirm ground verification. The data shall not be used if the indicator is not set.

b. A continuity check with the previous data set shall be performed. Failure of the continuity check shall prevent use of the data.

c. A time span shall be associated with the data set, which defines when the data is valid. This data shall only be used when spacecraft clock time is within this time span.

d. A flag(s) shall be set when errors are detected.

3.2.2.3.6.3 Fault Detection, Isolation, and Recovery Outputs

a. EOS position and velocity vector error flag(s).

b. Scheduled TDRS position and velocity error flag(s).

c. Spacecraft clock and master oscillator error flag(s).

d. Doppler measurement edit error flag(s).

e. Navigation filter covariance matrix error flag(s).

f. Uplinked EOS ephemeris error flag(s).

g. Uplinked TDRS ephemeris error flags(s).

h. Uplinked spacecraft clock time bias / master oscillator normalized frequency error polynomial error flag(s).

3.2.3 Power Monitoring and Control Software

3.2.3.1 Day/Night Duration

3.2.3.1.1 Inputs

a. Short circuit current telemetry

3.2.3.1.2 Processing Requirements

[1] The process shall determine the day/night transitions based on sample cell telemetry.

[2] If the short circuit current of both sample cells falls below a threshold then Spacecraft nighttime shall begin.

[3] When both telemetry point's values exceed a threshold then Spacecraft daytime shall commence.

[4] The duration of the last Spacecraft day and night shall be calculated.

3.2.3.1.3 Outputs

a. The duration of the last Spacecraft suntime

b. The duration of the last Spacecraft night time.

c. Current status of Spacecraft (0=eclipse/1= sun)

3.2.3.2 Discharge Amp–minutes

3.2.3.2.1 Inputs

a. Battery 1 current telemetry

b. Battery 2 current telemetry

c. Status of Spacecraft (Sun=1/Eclipse=0)

3.2.3.2.2 Processing Requirements

[1] The process shall perform amp–minute integration on each battery during discharge periods (i.e. when in eclipse).

3.2.3.2.3 Outputs

a. Battery 1 discharge amp–minutes

b. Battery 2 discharge amp–minutes

3.2.3.3 Charge to Discharge Ratio Required

3.2.3.3.1 Inputs

a. Battery 1 temperature telemetry

b. Battery 2 temperature telemetry

c. Battery 1 discharge amp–minutes

d. Battery 1 discharge amp–minutes

e. Status of Spacecraft (Sun=1/Eclipse=0)

f. Stored table of C/D ratios as a function of battery temperature.

3.2.3.3.2 Processing Requirements

[1] The process shall determine the desired C/D ratio for each battery based on temperature and the C/D ratio look–up table.

[2] The process shall determine the desired C/D ratio as soon as the Spacecraft status changes from discharge (eclipse) to charge (in sun).

3.2.3.3.3 Outputs

a. Battery 1 desired C/D ratio

b. Battery 1 desired C/D ratio

3.2.3.4 Variable Battery Charge Rate Determination

3.2.3.4.1 Inputs

a. Battery 1 desired C/D ratio

b. Battery 1 desired C/D ratio

c. Battery 1 discharge amp–minutes

d. Battery 1 discharge amp–minutes

e. Status of Spacecraft (Sun=1/Eclipse=0)

f. The duration of the last Spacecraft suntime.

3.2.3.4.2 Processing Requirements

[1] The process shall determine the desired charge amp–minutes required for each battery by multiplying the desired C/D ratio by the discharge amp–minutes as soon as the Spacecraft status changes from discharge to charge and the desired C/D ratio has been calculated.

[2] The process shall determine the charge rate for each battery by dividing the desired charge amp–minutes by the duration of the last Spacecraft suntime minus 5 minutes.

[3] The commanded charge rate shall be the calculated charge rate rounded up to the next highest commandable rate.

[4] The process shall default to a charge rate of 14.0 Amps (C/3.6) if the suntime is less than 15 minutes.

[5] The process shall be capable of being overridden in favor of the Fixed charge rate process.

3.2.3.4.3 Outputs

a. Battery 1 charge amp–minutes

b. Battery 1 charge amp–minutes

c. Battery 1 commanded charge rate

d. Battery 2 commanded charge rate

3.2.3.5 Fixed Battery Charge Rate Determination

3.2.3.5.1 Inputs

a. Battery 1 desired C/D ratio

b. Battery 1 desired C/D ratio

c. Battery 1 discharge amp–minutes

d. Battery 1 discharge amp–minutes

e. Status of Spacecraft (Sun=1/Eclipse=0)

f. The duration of the last Spacecraft suntime.

3.2.3.5.2 Processing Requirements

[1] The process shall determine the desired charge amp–minutes required for each battery by multiplying the desired C/D ratio by the discharge amp–minutes as soon as the Spacecraft status changes from discharge to charge and the desired C/D ratio has been calculated.

[2] The process shall select a charge rate of c/2.5 (20.0 Amps).

[3] The process shall be capable of being overridden in favor of the Variable charge rate process.

3.2.3.5.3 Outputs

a. Battery 1 charge amp–minutes

b. Battery 1 charge amp–minutes

c. Battery 1 commanded charge rate

d. Battery 2 commanded charge rate

3.2.3.6 Battery Trickle Charge Rate Determination

3.2.3.6.1 Inputs

a. Battery 1 charge amp–minutes required

b. Battery 1 charge amp–minutes required

c. Battery 1 current telemetry

d. Battery 2 current telemetry

e. Status of Spacecraft (Sun=1/Eclipse=0)

3.2.3.6.2 Processing Requirements

[1] During Spacecraft sunlight, the process shall perform charge amp–minute integration.

[2] When the integrated charge amp–minutes equals the charge amp–minute required, the battery charge rate shall be commanded to the trickle charge rate (.55 Amps).

[3] The process shall set a status flag to indicate the battery is fully charged.

[4] The status flag shall be reset once discharge has begun.

3.2.3.6.3 Outputs

a. Battery 1 charge amp–minutes

b. Battery 1 charge amp–minutes

c. Battery 1 commanded charge rate

d. Battery 2 commanded charge rate

e. Battery 1 fully charged status

f. Battery 2 fully charged status

3.2.3.7 Battery Theoretical SOC Determination

3.2.3.7.1 Inputs

a. Battery 1 temperature telemetry

b. Battery 2 temperature telemetry

c. Battery 1 current telemetry

d. Battery 2 current telemetry

e. Status of Spacecraft (Sun=1/Eclipse=0)

f. Battery efficiency parameters

g. Battery 1 fully charged status

h. Battery 2 fully charged status

i. Battery 1 commanded charge rate

j. Battery 2 commanded charge rate

3.2.3.7.2 Processing Requirements

[1] The process shall determine the theoretical amp–minute charge for each battery during the sunlight periods.

[2] The amp–minutes of battery charging shall be integrated over time by multiplying the battery charge current by the charging efficiency.

[3] The process shall determine the battery charging efficiency using the following algorithm:

$$\text{Efficiency} = A_0 + A_1 * T + A_2 * T^2$$

Where:
A_0, A_1, and A_2 = Battery charge efficiency parameters
T = Battery temperature

[4] The process shall stop battery charge current integration after the battery has been commanded to trickle charge rate.

[5] The theoretical state of charge shall be reset to full charge when battery is commanded to trickle charge.

3.2.3.7.3 Outputs

a. Battery 1 theoretical state of charge

b. Battery 2 theoretical state of charge

3.2.3.8 Actual Battery State of Charge

3.2.3.8.1 Inputs

a. Battery 1 charge amp–minutes

b. Battery 1 charge amp–minutes

c. Status of Spacecraft (Sun=1/Eclipse=0)

d. Battery 1 fully charged status

e. Battery 2 fully charged status

f. Battery 1 commanded charge rate

g. Battery 2 commanded charge rate

3.2.3.8.2 Processing Requirements

[1] The process shall determine the battery state of charge by integrating the battery current over time.

[2] The process shall stop battery charge current integration after the battery has been commanded to trickle charge rate.

[3] During discharge, the process shall determine battery state of charge by integrating battery current over time.

[4] The actual state of charge shall be reset to full charge when battery is commanded to trickle charge.

3.2.3.8.3 Outputs

a. Battery 1 actual state of charge

b. Battery 2 actual state of charge

3.2.3.9 Battery State of Charge Based on Battery Pressure

3.2.3.9.1 Inputs

a. Battery 1 (A,B,C & D) pressure telemetry

b. Battery 2 (A,B,C & D) pressure telemetry

c. Battery 1 temperature telemetry

d. Battery 2 temperature telemetry

e. Battery 1 (A,B,C & D) cell voltage telemetry

f. Battery 2 (A,B,C & D) cell voltage telemetry

g. Status of Spacecraft (Sun=1/Eclipse=0)

h. Battery Pressure, temperature, voltage state–of–charge table

3.2.3.9.2 Processing Requirements

[1] The process shall determine the battery state of charge by performing a table look–up based on pressure, voltage, and temperature.

3.2.3.9.3 Outputs

a. Battery 1 pressure state of charge

b. Battery 2 pressure state of charge

3.2.3.10 Load Power Monitoring

3.2.3.10.1 Inputs

a. Component current telemetry

b. Bus voltage telemetry

c. Load profile table (with status for automatic switch over to redundant side)

3.2.3.10.2 Processing Requirements

[1] The process shall determine the component load demand by multiplying the component current telemetry by the bus voltage telemetry (EPC 28V telemetry if applicable).

[2] The process shall compare the load demand to the load profile and set a flag if the load is 20% over power.

[3] The process shall command the component off and the back–up component on if the load demand is 80% over powered and the load profile table has this function enabled.

3.2.3.10.3 Outputs

a. Component on/off commands

b. Component over powered telemetry flags

c. Component load demand telemetry

3.2.3.11 Load Shedding

3.2.3.11.1 Inputs

a. Battery 1 theoretical state of charge

b. Battery 2 theoretical state of charge

c. Load shed profile table (with load priority)

3.2.3.11.2 Processing Requirements

[1] The process shall shed loads in order of priority if either battery theoretical state of charge falls below 70% SOC (65% with one cell failed).

3.2.3.11.3 Outputs

a. Component on/off commands

3.2.3.12 Solar Array Power Monitoring

3.2.3.12.1 Inputs

a. Total array shunt current

b. SSU control voltage

c. Solar array current

d. Total load current

e. Battery 1 current

f. Battery 2 current

g. Status of Spacecraft (Sun=1/Eclipse=0)

3.2.3.12.2 Processing Requirements

[1] The process shall determine the health of the solar array by calculating the solar array power.

[2] The solar array current shall be calculated by adding the battery charge currents and the load current.

[3] The solar array capability shall be determined by adding the solar array current and the shunt current.

3.2.3.12.3 Outputs

a. Calculated solar array current

b. Calculated solar array capability.

3.2.4 Thermal Monitoring and Control Software

This section specifies the software requirements for the TCS flight software, the portion of the EOS Spacecraft flight software supporting the thermal control subsystem.

[1] The TCS software shall be responsible for providing autonomous control of the TCS, where required, and monitoring functions.

[2] The TCS flight software shall have the capability of monitoring and controlling TCS components to the degree required to isolate faults, provide alerts for emergencies, and control equipment operation, as required.

3.2.4.1 TCS Modes

[1] The TCS flight software shall support operation of the TCS in all Spacecraft modes.

3.2.4.2 TCS Processes

The processes to be performed by the TCS flight software include:

a. TCS Fault Detection, Isolation, and Recovery

b. CPHTS Reservoir Operational Heater Set–point Temperature Changes

c. CPHTS Start–Up and Control

d. Transition to Safe–Hold Mode

3.2.4.2.1 TCS Fault Detection, Isolation, and Recovery

3.2.4.2.1.1 Inputs

a. Component Temperature Telemetry

b. Pressure Switch

c. Heater status

d. Allowable temperature/pressure ranges

e. Operating mode/component configuration

3.2.4.2.1.2 Processing Requirements

[1] The TCS flight software shall have the capability of monitoring and controlling TCS components to the degree required to isolate faults, provide alerts for emergencies, and initiate recovery actions, if required.

[2] The TCS flight software shall maintain and store, for each telemetry temperature sensor, the maximum and minimum allowable temperature values.

[3] These shall be used for comparison with actual temperature telemetry readings in fault detection, and shall initiate FDIR process.

3.2.4.2.1.3 Outputs

(TBD–7)

3.2.4.2.2 CPHTS Reservoir Operational Heater Set–Point Temperature Changes

3.2.4.2.2.1 Inputs

a. CPHTS temperature telemetry

b. Instrument (CPHTS–controlled) status

c. Allowable temperature ranges

d. CPHTS Reservoir temperature set point

e. Pressure Switch

3.2.4.2.2.2 Processing Requirements

[1] Flight software controlled heater set–point temperature changes (for CPHTS Reservoir only) shall be provided to maintain operating CPHTS temperatures (particularly Instrument interface temperatures) within their allowable range.

3.2.4.2.2.3 Outputs

a. Updated CPHTS Reservoir temperature set point

3.2.4.2.3 CPHTS Start–Up

3.2.4.2.3.1 Inputs

a. CPHTS temperature telemetry

b. Instrument (CPHTS–controlled) status

c. Allowable temperature ranges

d. CPHTS Reservoir temperature set point

e. Start–up command

3.2.4.2.3.2 Processing Requirements

[1] Flight software shall perform sequence of heater controller commands to start–up the CPHTS from quiescent conditions.

[2] The controlled start–up of the CPHTS shall be provided, following a pre–determined timeline and/or dependent on specific temperature telemetry response.

3.2.4.2.3.3 Output

(TBD–8)

3.2.4.2.4 Transition to Safe Mode

(TBD–9)

3.2.4.3 External Software Interfaces

[1] The TCS software shall be resident in the C&DH Spacecraft Control Computer (SCC).

3.3 External Interface Requirements

This section contains the specification of requirements for interfaces between the Flight Software System and its external environment. As shown in Figure 3, the Flight Software System's external interfaces are the Ground Control Facility/LV System, Subsystems and Instruments.

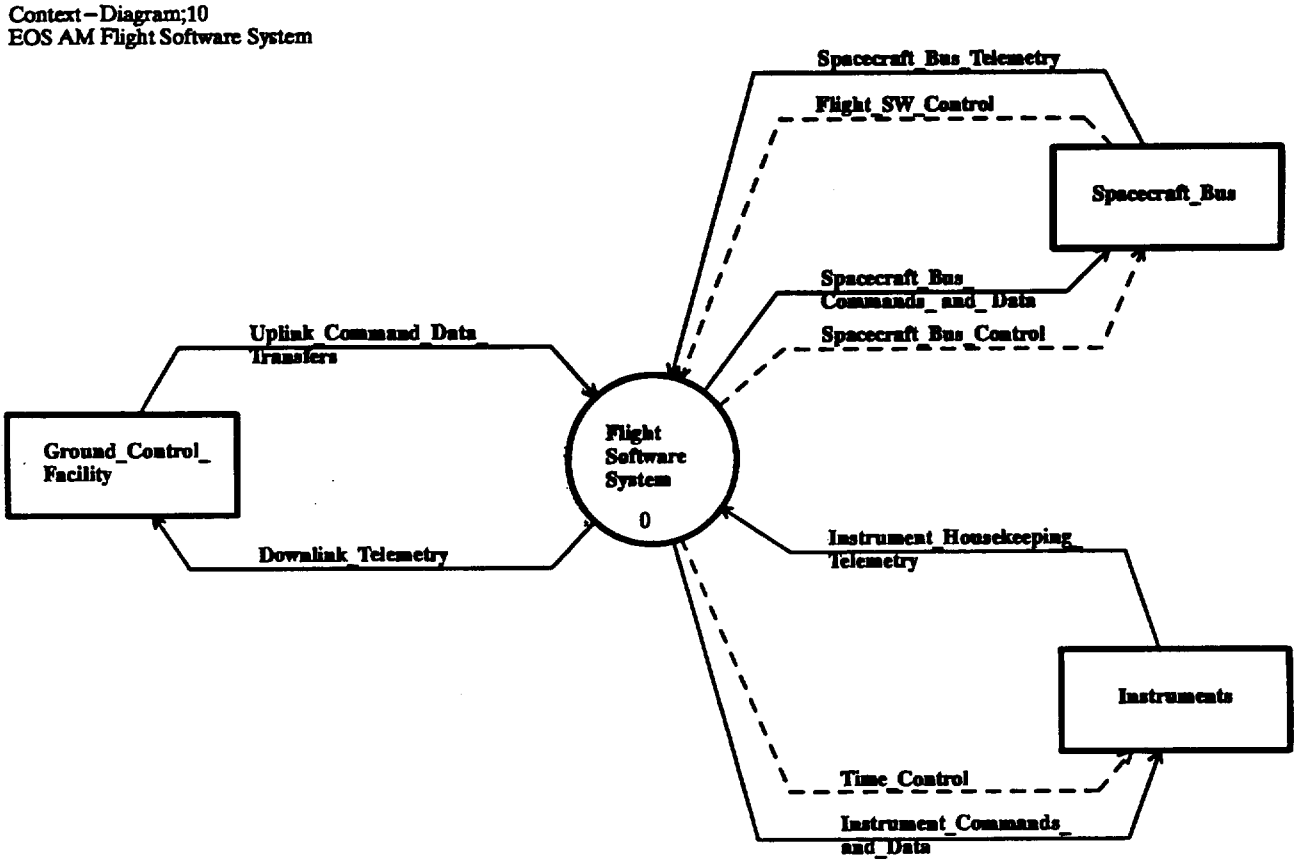

Figure 3. EOS–AM Flight Software System Context DFD

3.3.1 Ground Control Facility/LV System Interface

The Ground Control Facility is responsible for scheduling, controlling and monitoring the daily activities of the EOS–AM Spacecraft. Spacecraft commands for both Instruments and Spacecraft Bus Subsystems are sent to the spacecraft in the form of real–time commands or stored commands. EOS–AM Spacecraft activities are monitored for compliance with scheduled events and monitored for any spacecraft anomalies by receiving and processing Spacecraft Telemetry. In addition, ascent telemetry shall be provided to the LV interface in accordance with IS20008503 and UDC–501.

The following requirements are the implementation constraints:

[1] Spacecraft_Commands shall be limited to 35 Commands per Second.

[2] Spacecraft_Telemetry shall be limited to 1 Kbps downlink telemetry for Health and Safety functions.

[3] Spacecraft_Telemetry shall be limited to 16 Kbps downlink telemetry for Spacecraft Housekeeping functions.

3.3.2 Subsystems Interface

The EOS–AM Spacecraft Subsystems provides telemetry data which the Flight Software System processes. Telemetry data received by the Flight Software System is processed by the various components which makes up the software system. The processing performed on the telemetry data is in support of the closed loop interfaces to subsystems components such as reaction wheel assemblies, thrusters, solar array, high gain antenna, and many more. The Flight Software System generates subsystems commands in support of these closed loop interfaces. Open loop interfaces are also supported by the Flight Software System. Flight Software System components receive subsystem telemetry, process the data and provide new data to the other external interfaces of the Flight Software System. These open loop interfaces exist to support functions such as generation and distribution of ancillary data in which subsystem telemetry is received, process by the various components of the Flight Software System and distributed by other components of the software system across both the Instrument interface and Ground Control Facility Interface.

The following requirements are the implementation constraints:

(TBD–10).

3.3.3 Instruments Interface

The Flight Software System interface with the EOS–AM Spacecraft Instruments is provided to support instrument management by the Ground Control Facility. Instrument health and status telemetry is received by the Flight Software System to be included in the spacecraft telemetry being sent to the Ground Control Facility. Processing of instrument telemetry is performed by the Flight Software System to facilitate management of the instruments and to detect and isolate instrument anomalies.

[1] The FSW system shall comply with the interface requirements specified in the General Instrument Interface Specification (GIIS), GSFC 420–03–02.

[2] The FSW system shall comply with the interface requirements of the EOS–AM Instrument sets described in Unique Instrument Interface Documents (UIIDs).

The following requirements are the implementation constraints:

(TBD–11)

3.4 Performance and Quality Engineering Requirements

3.4.1 Product Assurance Requirements

[1] The FSW system shall comply with the requirements of GSFC 420–05–02.

3.4.2 Development Requirements

[1] The Flight Software System shall be developed in compliance with the NASA Standard Software Life Cycle for software programs greater than 5,000 Software Lines Of Code (SLOC).

[2] The Flight Software System shall be documented in compliance with the standards in NASA–STD–2100–91 for software programs greater than 5,000 SLOC. (Specific life cycle adaptations may be considered when the System Lines of Code (SLOC) to be implemented are greater than 500 and equal to or less than 5000. Life cycle and documentation standards defined in NASA–STD–2100–91 do not apply when the SLOC to be implemented are equal to or less than 500.)

[3] The Flight Software System shall be developed and documented in compliance with the policies defined in the PN20008655, Software Management Plan for EOS–AM Spacecraft, 13 March 1992.

3.4.3 Programming Standards

[1] The Flight Software System shall adhere to the EOS Software Programming Practices Standard and Conventions (PPS&C) document for programming standards requirements.

3.4.4 Ease of Modification

[1] The Flight Software System shall adhere to the EOS Software Programming Practices Standard and Conventions (PPS&C) document for ease of modification requirements.

3.4.5 Ease of Testing

[1] The Flight Software System shall adhere to the EOS Software Programming Practices Standard and Conventions (PPS&C) document for ease of testing requirements.

3.4.6 Ease of Expanding

[1] The Flight Software System shall adhere to the EOS Software Programming Practices Standard and Conventions (PPS&C) document for ease of expanding requirements.

3.5 Safety Requirements

(TBD–12)

3.6 Security and Privacy Requirements

N/A

(This page intentionally left blank.)

4 VERIFICATION MATRIX

The verification matrix will be provided under separate cover as Attachment A to this document.

(This page intentionally left blank.)

5 REQUIREMENTS TRACEABILITY

The Requirements Traceability Matrix will be provided under separate cover as Attachment B to this document.

(This page intentionally left blank.)

6 ABBREVIATIONS AND ACRONYMS

The acronyms and abbreviations are contained in the EOS–AM Spacecraft Program Acronym List, EOS–DN–SE&I–025.

(This page intentionally left blank.)

7 GLOSSARY

The glossary is contained in the EOS–AM Spacecraft Software Glossary, EOS–DN–SW–036.

(This page intentionally left blank.)

8 APPENDIX

The following table contains the allocation of the various functions described in this document to the FSWS CSCIs.

Functions	CSCIs							
	CT&C	NAV	ADAC	EPS& TCS	OS/ Exec	CTIU	SCC	
3.1.15.1 FSWS General Functions	X	X	X	X	X	X	X	
3.1.8 FSWS FDIR Functions	X	X	X	X	X	X	X	
3.1.5, 3.1.7 Command Requirements	X	X	X	X	X	X	X	
3.1.5.4.1, 3.1.14.2 Telemetry Data Content	X	X	X	X	X	X	X	
3.1.15.5 FSWS Ancillary Data Support	X	X	X			X		
3.2.2.3.2 TDRSS		X						
3.1.15.6 FSWS Command and Memory Load Processing Rates	X					X		
3.1.9.1.2 FSWS Reprogramming	X	X	X	X	X			
3.1.9.11 Integrity and Revision Checking	X	X	X	X	X	X	X	
3.1.9.1.2 Computer Program Implementation	X	X	X	X	X	X	X	
3.1.9.2.3 FSWS Programming Language	X	X	X	X	X	X	X	

Functions	CSCIs							
	CT&C	NAV	ADAC	EPS& TCS	OS/ Exec	CTIU	SCC	
3.1.9.2.4 FSWS Margin Requirements	X	X	X	X	X	X	X	
3.2.1.5 CTIU Firmware						X		
3.2.1.1 SCC Software for the C&DHS	X							
3.2.2.1 GN&C Software External Interfaces		X	X					
3.2.2.2 Attitude Determination and Control Software			X					
3.2.2.3 Navigation Software		X						
3.2.3 Power Monitoring and Control Software				X				
3.2.4 Thermal Monitoring and Control Software				X				
3.2.1.6.1 Memory Loading/Dumping	X	X	X	X	X	X	X	
3.2.2.3.1 Astrodynamic Processing		X						
3.2.2.3.2 TDRS Propagation		X						
3.2.2.3.3 Navigation Filter		X						
3.2.1.6.2 System Tables	X	X	X	X	X	X	X	

Functions	CSCIs							
	CT&C	NAV	ADAC	EPS& TCS	OS/ Exec	CTIU	SCC	
3.2.1.6.3 Command and Data Handling	X	X	X	X	X	X	X	
3.1.17.1 Absolute Time Command (ATC) Storage	X							
3.1.17.2 Absolute Time Command Processing	X							
3.1.17.3 Relative Time Sequences	X							
3.1.17.4 Telemetry Monitor	X							
3.1.17.5 Telemetry Reporting	X							
3.1.17.6 Time Maintenance	X	X				X		
3.3 External Interface Requirements	X	X	X	X	X	X	X	
3.4.1 Product Assurance Requirements	X	X	X	X	X	X	X	