5127

CONTRACT NAS5–32500

Earth Observing System

EOS–AM SPACECRAFT PDR DATA PACKAGE

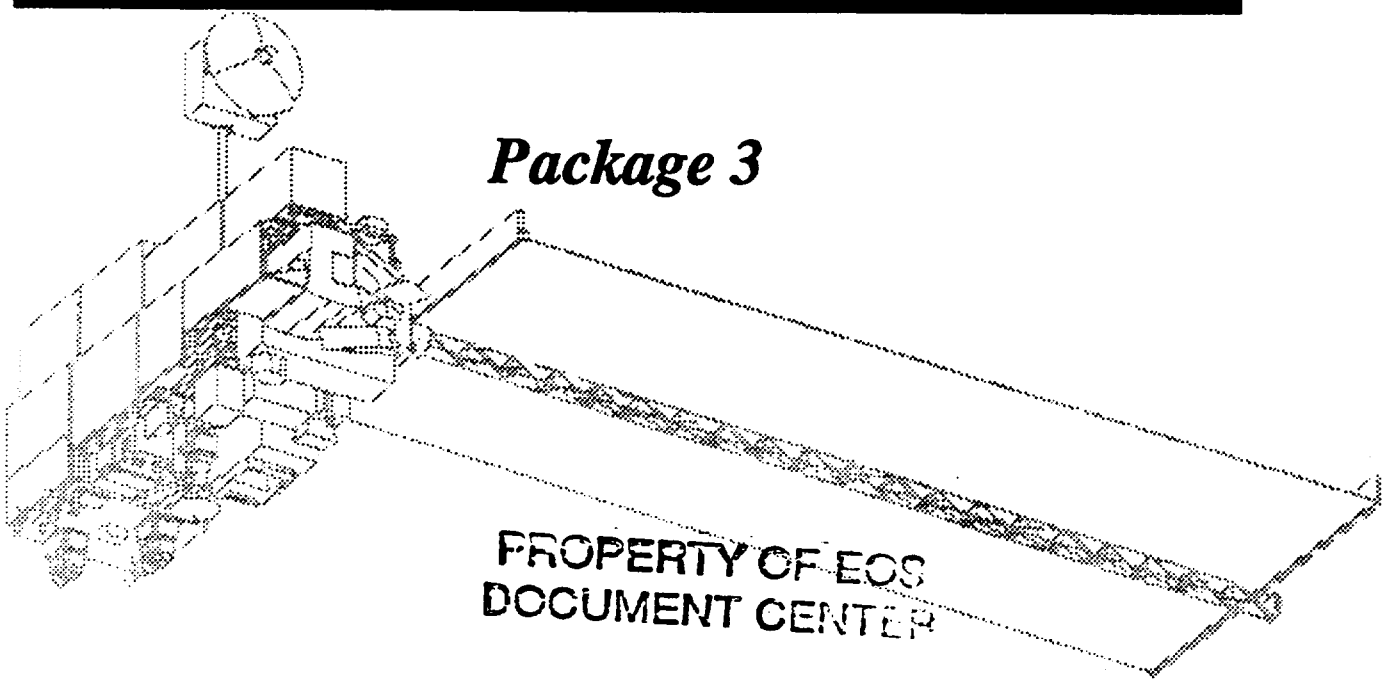

Package 3

PROPERTY OF EOS
DOCUMENT CENTER

22 JULY 1993

EOS

MARTIN MARIETTA

ASTRO SPACE
EAST WINDSOR, NJ

EOS-AM SPACECRAFT (S/C) CONTRACT DOCUMENT TRANSMITTAL

TO: National Aeronautics & Space Administration Goddard Space Flight Center - Bldg.16W-; Room N70 Care Of: R. Dorsey , Documentation Lib. Tech. (code 421) Greenbelt, MD 20771 Attn: EOS-AM S/C (GSFC) C.O. & EOS/GSFC Library (code 420)	EOS-AM S/C Program CONTRACT: NAS5-32500	IN REPLY REFER TO: EOSC-0945 DATE: 7/22/93

APPROVAL REQUIREMENTS:

- [ ] Type 1 requires approval of Technical Manager prior to implementation

  Approval Due Date _____

- [x] Type 2 time-limited right of disapproval (45 days after receipt)

  Approval Due Date _____

- [ ] Type 3 Information Only

DR NO. MD-121

TITLE: S/C PDR DATA PACKAGE
Package 3

Martin Marietta Document Number:

References:

# of copies: 12

GSFC Distribution :

EOS Contracting Officer
J. King, Code 284.4: (letter only)

EOS GSFC Library, Code 420: 12

REMARKS:

Outgoing GSFC Correspondence
OGC No. 93-0435
Transmit Date: 7/22/93

Martin Marietta USE:

Originator:

Internal Distribution:
EOS Document Center (2)
Cover Sheet Only:
Program Control/C. Gyursco
Configuration Management/G. Rauscher

FROM: *Martin Marietta*
Astro Space /Nassau Park
P. O. Box 800
Princeton, NJ 08543-0800

SIGNATURE: Thomas R Gustmo for
D. Supow, Contract Manager

EOS Form 009-02/04/1993

MD-121: EOS-AM SPACECRAFT PDR DATA PACKAGE

DR/DN	TYPE	TITLE	REV	DOCUMENT	DATE
PACKAGE NO. 1				**30 APRIL 1993**	
SEP-101	1	Contract End Item (CEI) Specification for the EOS-AM Spacecraft	-	PS20005396	4/15/93
556- ICD-103	1	EOS-AM Spacecraft to Launch Vehicle Interface Reqrmnts Document	Prelim	IS20008503	4/30/93
ICD-104	1	Radio Frequency ICD Between EOS-AM S/C and STDN	-	IS20008504	3/31/93
PACKAGE NO. 2				**8 JULY 1993**	
164- EOS-DN	-	Baseline Description Document (BDD) for the EOS-AM S/C (Preliminary)	I	SE&I-010	6/10/93
159- EOS-DN	-	System Operating Modes	B	SE&I-001	5/21/93
-301- SP-301	2	Performance Spec. Command & Data Handling S/S for EOS-AM S/C	-	PS20008567	6/28/93
-400- SP-401	2	Performance Spec. Communications S/S for EOS-AM S/C	-	PS20008580	6/30/93
175- SP-501	2	Performance Spec. Electrical Power S/S for EOS-AM S/C	-	PS20004749	6/28/93
654- SP-741	2	Performance Spec. Electrical Accommodations S/S for EOS-AM S/C	-	PS20008636	7/6/93
-81- SP-861	2	Critical Item Devlpmt. Spec. High Gain Antenna Assembly for EOS-AM S/C	-	PS20008513	10/16/92
SP-871	2	Critical Item Devlpmt. Spec. Solar Array Assembly for EOS-AM S/C	-	PS20008514	5/7/93
SEP-106	2	Electromaagnetic Compatibility (EMC) Control Plan for EOS-AMS/C	A	PN20005869	6/28/93
ICD-106	1	Interface Control Document (ICD) Data Format Control Book for EOS-AM S/C	Prelim	IS20008658	6/8/93
SD-110	2	EOS-AM S/C Flight Software System Requirements Specification	-	20008662	5/6/93
VRD-100	2	Verification Plan for the EOS-AM S/C	-	PN20005404	5/5/93

MD-121: EOS-AM SPACECRAFT PDR DATA PACKAGE (CONT.)

DR/DN	TYPE	TITLE	REV	DOCUMENT	DATE
Package No. 3				22 JULY 1993	
513- SP-101	2	Performance Spec. Structures & Mechanism S/S for EOS-AM S/C	-	PS20001415	7/16/93
SP-201	2	Performance Spec. Thermal Control S/S for EOS-AM S/C	-	PS20008549	7/20/93
SP-601	2	Performance Spec. Guidance, Navigation & Control S/S for EOS-AM S/C	-	PS20004937	7/21/93
EOS-DN	-	Housekeeping EM Layout Drawings	A	CNF-017	6/18/93
EOS-DN	-	Launch/On-orbit Deployed Configuration Layout	A	CNF-018	7/8/93
EOS-DN	-	Primary Structure Layouts	-	CNF-019	6/18/93
EOS-DN	-	Propulsion Module Layouts	-	CNF-020	7/7/93
EOS-DN	-	Flight Operations Management Plan	-	FO-001	6/30/93

PS20001415
CAGE No. 496711
16 July 1993

Performance Specification
Structures and Mechanisms Subsystem
for EOS–AM Spacecraft
(SP–101)

Prepared under:
Contract NAS5–32500
NASA Goddard Space Flight Center
Greenbelt, Maryland 20771

Prepared by:
Martin Marietta Corporation
Astro Space
P.O. Box 800
Princeton, New Jersey 08543–0800

DCC071993

REVISION LOG

This log identifies those portions of this document which have been revised since the original issue. Revised portions of each page, for the current revision only, are identified by marginal striping.

Revision	Paragraph Number(s) Affected	Rev. Date	Approval
Initial Issue		07/16/93	CM/GSR

TABLE OF CONTENTS

SECTION / PARAGRAPH	TITLE	PAGE
1	SCOPE	1
1.1	Identification	1
2	APPLICABLE DOCUMENTS	3
2.1	Government Documents	3
2.1.1	NASA Documents	3
2.1.2	Military Documents	3
2.2	Non–Government Documents	4
2.2.1	Martin Marietta Astro Space Documents	4
2.2.2	Subcontractor Documents	6
2.2.3	Other Non–Government Documents	6
3	REQUIREMENTS	7
3.1	SMS Definition	7
3.1.1	Item Diagrams	7
3.1.2	Interface Definition	7
3.1.2.1	Functional Interfaces	7
3.1.2.2	Physical Interfaces	9
3.1.3	Major Component List	11
3.2	Characteristics	12
3.2.1	Performance	12
3.2.1.1	Command and Telemetry Support	13
3.2.1.2	Pointing Error Contributions	13
3.2.2	Operational Modes	15
3.2.2.1	Stowed Mode	15
3.2.2.2	Deployed Mode	15
3.2.2.3	Transition Mode Between Stowed Mode and Deployed Mode	15
3.2.2.4	Safe Mode	15
3.2.3	Physical Characteristics	15
3.2.3.1	Mass	15

TABLE OF CONTENTS (Continued)

SECTION / PARAGRAPH	TITLE	PAGE
3.2.3.2	Durability	15
3.2.3.3	Layout and Dimensions	16
3.2.3.4	Maintainability Impact on Design	16
3.2.3.5	Handling Features	16
3.2.4	Power Characteristics	16
3.2.5	Power Usage	16
3.2.5.1	Power Exclusion Rules	17
3.2.6	Reliability	17
3.2.6.1	Storage Restrictions	17
3.2.6.2	Vulnerability Factors	17
3.2.6.3	Failure Tolerance	18
3.2.6.4	Failure Propagation Restrictions	18
3.2.7	Environmental Conditions	18
3.2.7.1	Storage, Integration and Test	19
3.2.7.2	Shipment	19
3.2.7.3	Launch	19
3.2.7.4	On–orbit	20
3.2.7.5	Electromagnetic Radiation	20
3.2.7.6	Contamination	21
3.3	Design and Construction	21
3.3.1	Material, Processes, Parts, and Finishes	21
3.3.1.1	Properties of Materials	21
3.3.2	Nameplates and Product Marking	21
3.3.3	Workmanship	21
3.3.4	Interchangeability	21
3.3.5	Safety	22
3.3.5.1	General	22
3.3.5.2	Automatic Hazard Detection and Safing	22
3.3.5.3	Safety Interlock Mechanisms/Techniques	22
3.3.5.4	Liquids and Gasses	22

TABLE OF CONTENTS (Continued)

SECTION / PARAGRAPH	TITLE	PAGE
3.3.5.5	Pressurized Vessels	22
3.3.6	Structural Design Criteria	22
3.3.7	Mass Properties	23
3.3.7.1	Spacecraft Center of Gravity Requirements	23
3.4	Documentation	23
3.4.1	Specifications	23
3.4.2	Drawings	23
3.4.3	Reports	23
3.4.3.1	Mass Properties	23
3.4.3.2	Structural Analysis	24
3.4.4	Technical Manuals	24
3.4.5	Test Plans	24
3.4.6	Procedures (TBD–8)	24
3.4.7	Installation Instructions	24
3.4.8	Operational Requirements Documentation	24
3.5	Logistics	24
3.5.1	Maintenance	24
3.5.2	Supply	25
3.6	Precedence	25
3.6.1	Precedence of Design Criteria	25
3.6.2	Documentation Precedence	25
3.7	Major Component Characteristics	26
3.7.1	Allocations	26
3.7.2	Flight Hardware Component Characteristics	26
3.7.2.1	Primary Structure	26
3.7.2.2	Propulsion Module Structure	27
3.7.2.3	Equipment Module Structures	27
3.7.2.4	Instrument Accommodation Structures	28
3.7.2.5	Secondary Structure	28
3.7.2.6	Kinematic Mounts	29

TABLE OF CONTENTS (Continued)

SECTION / PARAGRAPH	TITLE	PAGE
3.2.3.2	Durability	15
3.2.3.3	Layout and Dimensions	16
3.2.3.4	Maintainability Impact on Design	16
3.2.3.5	Handling Features	16
3.2.4	Power Characteristics	16
3.2.5	Power Usage	16
3.2.5.1	Power Exclusion Rules	17
3.2.6	Reliability	17
3.2.6.1	Storage Restrictions	17
3.2.6.2	Vulnerability Factors	17
3.2.6.3	Failure Tolerance	18
3.2.6.4	Failure Propagation Restrictions	18
3.2.7	Environmental Conditions	18
3.2.7.1	Storage, Integration and Test	19
3.2.7.2	Shipment	19
3.2.7.3	Launch	19
3.2.7.4	On–orbit	20
3.2.7.5	Electromagnetic Radiation	20
3.2.7.6	Contamination	21
3.3	Design and Construction	21
3.3.1	Material, Processes, Parts, and Finishes	21
3.3.1.1	Properties of Materials	21
3.3.2	Nameplates and Product Marking	21
3.3.3	Workmanship	21
3.3.4	Interchangeability	21
3.3.5	Safety	22
3.3.5.1	General	22
3.3.5.2	Automatic Hazard Detection and Safing	22
3.3.5.3	Safety Interlock Mechanisms/Techniques	22
3.3.5.4	Liquids and Gasses	22

TABLE OF CONTENTS (Continued)

SECTION / PARAGRAPH	TITLE	PAGE
6.3.1	Exceptions to the GIS	39
6.3.2	Exceptions to the GIIS	39
6.4	Requirements Traceability Matrix	39

APPENDIX I

10	EOS–AM STRUCTURAL DESIGN CRITERIA	41
10.1	Scope	41
10.2	References	41
10.3	Definitions and Terms	42
10.3.1	General	42
10.3.2	Loads	43
10.3.3	Pressure	44
10.3.4	Strength	45
10.3.5	Stress	45
10.3.6	Composites	45
10.3.7	Margin of Safety	46
10.4	General Design Criteria and Procedures	46
10.4.1	General Design Philosophy	46
10.4.2	General Design Criteria	47
10.4.2.1	Stiffness Requirements	47
10.4.2.2	Strength Requirements	47
10.4.2.3	Margin of Safety	49
10.4.2.4	External Loads	49
10.4.2.5	Dynamic Loads	49
10.4.2.6	Model Uncertainty Factor	50
10.5	Design Characteristics	51
10.5.1	Material Properties	51
10.5.1.1	Allowable Mechanical Properties	51
10.5.1.2	Structural Component Allowables	51
10.5.2	Buckling and Crippling	51

TABLE OF CONTENTS (Continued)

SECTION / PARAGRAPH	TITLE	PAGE
10.5.3	Preload of Deployables	52
10.5.4	Structural Non–linearities	52
10.5.5	Alignment	52
10.5.6	Thermal Effects	52
10.5.7	Fatigue Considerations	53
10.5.8	Venting	53
10.5.9	Misalignment and Dimensional Tolerances	53
10.5.10	Welding	53
10.5.11	Fasteners	53
10.5.12	Reference Axes	54
10.5.13	Symbols	54
10.6	Design Procedures	54
10.7	Composite Materials	54
10.7.1	Composite Struts	54
10.8	Pressurized Systems	56
10.9	Design Conditions	56
10.9.1	General Conditions	56
10.9.1.1	Design Gross Weight	57
10.9.1.2	Mass Properties	57
10.9.2	Design Conditions and Environments	57
10.9.2.1	Prelaunch Environments	57
10.9.2.2	Primary Structure Stiffness Criteria	58
10.9.2.3	Secondary Structure/Subsystem/Component Stiffness Criteria	59
10.9.2.4	Design Loads For Primary Structure	62
10.9.2.5	Design Loads For Secondary Structures, Subsystems, and Components	69
10.9.2.6	Thermal Loading	73
10.9.2.7	Vibroacoustic Loading	73
10.9.2.8	Loads Cycle Analysis	73
10.9.2.9	Acoustic Environments	74
10.9.2.10	Random Vibration Environments	79

TABLE OF CONTENTS (Continued)

SECTION / PARAGRAPH	TITLE	PAGE
10.9.2.11	Sine Vibration Test Environment	93
10.9.2.12	Shock Environment	98

APPENDIX II

20	SMS COMMAND AND TELEMETRY LIST	101
20.1	Command Requirements	101
20.2	Telemetry Requirements	101

TABLE OF CONTENTS (Continued)

SECTION / PARAGRAPH	TITLE	PAGE
10.5.3	Preload of Deployables	52
10.5.4	Structural Non–linearities	52
10.5.5	Alignment	52
10.5.6	Thermal Effects	52
10.5.7	Fatigue Considerations	53
10.5.8	Venting	53
10.5.9	Misalignment and Dimensional Tolerances	53
10.5.10	Welding	53
10.5.11	Fasteners	53
10.5.12	Reference Axes	54
10.5.13	Symbols	54
10.6	Design Procedures	54
10.7	Composite Materials	54
10.7.1	Composite Struts	54
10.8	Pressurized Systems	56
10.9	Design Conditions	56
10.9.1	General Conditions	56
10.9.1.1	Design Gross Weight	57
10.9.1.2	Mass Properties	57
10.9.2	Design Conditions and Environments	57
10.9.2.1	Prelaunch Environments	57
10.9.2.2	Primary Structure Stiffness Criteria	58
10.9.2.3	Secondary Structure/Subsystem/Component Stiffness Criteria	59
10.9.2.4	Design Loads For Primary Structure	62
10.9.2.5	Design Loads For Secondary Structures, Subsystems, and Components	69
10.9.2.6	Thermal Loading	73
10.9.2.7	Vibroacoustic Loading	73
10.9.2.8	Loads Cycle Analysis	73
10.9.2.9	Acoustic Environments	74
10.9.2.10	Random Vibration Environments	79

LIST OF TABLES

TABLE	TITLE	PAGE
I	SMS Component List	11
II	SMS Power Resource Allocation	17
III	SMS Allocations	26
IV	Design Factors of Safety	48
V	Special Design Factors of Safety	49
VI	Model Uncertainty Factors (Powered Flight)	50
VII	Model Uncertainty Factors (On–orbit)	51
VIII	Minimum Resonant Frequency Goals for Primary Structure	59
IX	Minimum Resonant Frequencies for Subsystem, Component, and Secondary Structures	60
X	Minimum Fixed Base Resonant Frequency Requirements for Deployed Appendages (Orbital Cantilevered Frequencies)	61
XI	(Part A: for TITAN–IV/NUS) Design Quasi–static Limit Load Factors (Gs) For EOS–AM Spacecraft Primary Structure	63
XII	Design Quasi–static Flight Limit Accelerations (Gs) For EOS–AM Spacecraft Primary Structure	65
XIII	Design Quasi–static Flight Limit Accelerations (Gs) For EOS–AM Spacecraft Primary Structure	67
XIV	Design Quasi–static Flight Limit Accelerations (Gs, G/inch) For EOS–AM Spacecraft Equipment Module Structures	70
XV	Design Quasi–static Flight Limit Accelerations (Gs, G/inch) For Other EOS–AM Spacecraft Major Assemblies	72
XVI	Load Factor Application	73
XVII	Qualification/Protoflight Acoustic Noise Level (TITAN–IV/NUS & Atlas–IIAS Launch)	75
XVIII	Acceptance (Flight Limit) Acoustic Noise Level (TITAN–IV/NUS & Atlas–IIAS Launch)	76
XIX	Qualification/Protoflight Acoustic Noise Design Envelope Level (TITAN–IV (NUS) and Atlas–IIAS)	77
XX	Acceptance Acoustic Noise Envelope Level (TITAN–IV (NUS) and Atlas–IIAS)	78
XXI	Random Vibration Specifications for Housekeeping Components Mounted Directly to the Primary Structure (Weight > 200 Lbs)	80

LIST OF TABLES (Continued)

TABLE	TITLE	PAGE
XXII	Random Vibration Specifications for Housekeeping Components Mounted Directly to the Primary Structure (Weight < 200 Lbs)	81
XXIII	Random Vibration Specifications for Components Mounted to the CPHTS Radiator Panels	82
XXIV	Random Vibration Specifications for Propulsion Module Components	83
XXV	Random Vibration Levels for Components Mounted to Power EM Panels	84
XXVI	Random Vibration Levels for Components Mounted to Comm/C&DH EM Panels	85
XXVII	Random Vibration Levels for Components Mounted to Recorder EM Panels	86
XXVIII	Random Vibration Levels for Components Mounted to GN&C Sensor EM Panels	88
XXIX	Random Vibration Levels for Components Mounted to RWA EM Panels	89
XXX	Random Vibration Levels for Components Mounted to Battery Panel	90
XXXI	Random Vibration Levels for Components Mounted to DAS Panel	90
XXXII	Random Vibration Levels for Components Mounted to Several EM Panels	91
XXXIII	Random Vibration Levels for Components Mounted to SAA and Secondary Support Structures	92
XXXIV	Sinusoidual Sweep Vibration Test Levels for the Propulsion Module	93
XXXV	Sinusoidal Sweep Vibration Test Levels for the High Gain Antenna	94
XXXVI	Sinusoidal Sweep Vibration Test Levels for the Solar Array Assembly	94
XXXVII	Sinusoidal Sweep Vibration Test Levels for the Solar Array Drive	94
XXXVIII	Sinusoidual Sweep Vibration Test Levels for the Power EM	95
XXXIX	Sinusoidual Sweep Vibration Test Levels for the Comm/C&DH EM	95
XL	Sinusoidual Sweep Vibration Test Levels for the Recorder Equipment Module	96
XLI	Sinusoidual Sweep Vibration Test Levels for the GN&C Sensor EM	96
XLII	Sinusoidual Sweep Vibration Test Levels for the RWA Equipment Module	97

LIST OF TABLES (Continued)

TABLE	TITLE	PAGE
XLIII	Sinusoidual Sweep Vibration Test Levels for the DAS Panel	97
XLIV	Sinusoidual Sweep Vibration Test Levels for the Battery Panel	98
XLV	Maximum Expected Flight Shock Levels for Flight Hardware	100
XLVI	SMS Command List	101
XLVII	SMS Telemetry List	101

LIST OF TABLES (Continued)

TABLE	TITLE	PAGE
XXII	Random Vibration Specifications for Housekeeping Components Mounted Directly to the Primary Structure (Weight < 200 Lbs)	81
XXIII	Random Vibration Specifications for Components Mounted to the CPHTS Radiator Panels	82
XXIV	Random Vibration Specifications for Propulsion Module Components	83
XXV	Random Vibration Levels for Components Mounted to Power EM Panels	84
XXVI	Random Vibration Levels for Components Mounted to Comm/C&DH EM Panels	85
XXVII	Random Vibration Levels for Components Mounted to Recorder EM Panels	86
XXVIII	Random Vibration Levels for Components Mounted to GN&C Sensor EM Panels	88
XXIX	Random Vibration Levels for Components Mounted to RWA EM Panels	89
XXX	Random Vibration Levels for Components Mounted to Battery Panel	90
XXXI	Random Vibration Levels for Components Mounted to DAS Panel	90
XXXII	Random Vibration Levels for Components Mounted to Several EM Panels	91
XXXIII	Random Vibration Levels for Components Mounted to SAA and Secondary Support Structures	92
XXXIV	Sinusoidual Sweep Vibration Test Levels for the Propulsion Module	93
XXXV	Sinusoidal Sweep Vibration Test Levels for the High Gain Antenna	94
XXXVI	Sinusoidal Sweep Vibration Test Levels for the Solar Array Assembly	94
XXXVII	Sinusoidal Sweep Vibration Test Levels for the Solar Array Drive	94
XXXVIII	Sinusoidual Sweep Vibration Test Levels for the Power EM	95
XXXIX	Sinusoidual Sweep Vibration Test Levels for the Comm/C&DH EM	95
XL	Sinusoidual Sweep Vibration Test Levels for the Recorder Equipment Module	96
XLI	Sinusoidual Sweep Vibration Test Levels for the GN&C Sensor EM	96
XLII	Sinusoidual Sweep Vibration Test Levels for the RWA Equipment Module	97

TBR LOG

ITEM	SECTION	PAGE	SUBJECT	RESP.	DUE
TBR–1	Table I	12	Flight termination system	GSFC	LV Selection
TBR–2	3.2.1	12	FDLC Schedule for CDR	GSFC	9/93
TBR–3	3.2.7.3.7	20	Launch temperature range	M. DiNardo	1/94
TBR–4	3.2.7.3.7	20	Launch temperature range	M. DiNardo	1/94
TBR–5	3.2.7.3.7	20	Launch temperature range	M. DiNardo	1/94
TBR–6	Table XXI	80	Random vibration specification	C. Thasanatorn	9/93
TBR–7	Table XXII	81	Random vibration specification	C. Thasanatorn	9/93
TBR–8	Table XXV	84	Random vibration specification	C. Thasanatorn	9/93
TBR–9	Table XXIX	89	Random vibration specification	C. Thasanatorn	9/93
TBR–10	Table XXXII	91	Random vibration specification	C. Thasanatorn	9/93
TBR–11	Table XXXII	91	Random vibration specification	C. Thasanatorn	9/93
TBR–12	Table XXXII	91	Random vibration specification	C. Thasanatorn	9/93
TBR–13	Table XXXII	91	Random vibration specification	C. Thasanatorn	9/93
TBR–14	Table XXXIII	92	Random vibration specification	C. Thasanatorn	9/93
TBR–15	Table XXXIII	92	Random vibration specification	C. Thasanatorn	9/93
TBR–16	Table XLV	100	Shock levels	C. Thasanatorn	5/94
TBR–17	Appendix II	101	Command & Telemetry list	J. Pelliciotti	5/94

(This page intentionally left blank.)

1 SCOPE

1.1 Identification

This specification establishes the performance, design, development, and test requirements for the Structures and Mechanisms Subsystem (SMS) of the Earth Observing System (EOS) AM Spacecraft. These requirements are derived from the Contract End Item Specification, PS20005396, and the documents it cites.

The SMS provides the necessary structural support and mounting area for all Instruments and housekeeping equipment. These functions are engineered to satisfy multiple constraints including: launch environment, fairing static envelope, AM Instrument set field–of–view and pointing stability requirements. The SMS provides the release and deployment mechanisms for the High Gain Antenna. The SMS also provides the interface to the launch vehicle separation system.

(This page intentionally left blank.)

2 APPLICABLE DOCUMENTS

2.1 Government Documents

The following documents of the exact issue shown, form a part of this specification to the extent specified herein. In the event of conflict between the documents referenced below and the contents of this specification, the contents of this specification shall take precedent, except as defined in Section 3.6 herein.

2.1.1 NASA Documents

420–03–02 1 December 1992	General Instrument Interface Specification (GIIS) for the Earth Observing System
420–05–02 13 November 1992	Earth Observing System (EOS) Performance Assurance Requirements for the EOS AM–1 Spacecraft, Change CH–01
421–12–03–02 dated(TBD–1)	Unique Instrument Interface Document for the Multi–Angle Imaging Spectro–Radiometer (MISR)
421–12–04–01 CH–02, 24 March 1993	Unique Instrument Interface Document for the Moderate–Resolution Imaging Spectroradiometer (MODIS)–Rev A
421–12–11–01 29 January 1993	Unique Instrument Interface Document for the Advanced Spaceborne Thermal Emission and Reflection Radiometer (ASTER)
421–12–12–02 15 March 1993	Unique Instrument Interface Document for the Clouds and the Earth's Radiant Energy System (CERES)
421–12–15–02 dated(TBD–2)	Unique Instrument Interface Document for the Measurement of Pollution in the Troposphere (MOPITT)
NHB 6000.1C June 1976	Requirements for Packaging, Handling, and Transportation for Aeronautical and Space Systems, Equipment, and Associated Components

2.1.2 Military Documents

DOD–STD–100	Engineering Drawing Practices
DOD–D–1000	Drawings and Associated Engineering Lists

MIL–STD–1522A 01 July 1972	Standard General Requirements for Safe Design and Operation of Pressurized Missile and Space Systems
MIL–HDBK–5	Military Handbook, Metallic Materials and Elements for Aerospace Vehicle Structures, Rev. E, Change Notice 2
MIL–HDBK–17	Military Handbook, Polymer Matrix Composities, Vol. 1: Guidelines, Rev. B, Change Notice 1
MIL–HDBK–23A 30 December 1968	Structural Sandwich Composites
WSMCR 127–1 December 1989	Western Space and Missile Center Range Safety Regulations
AFML November 1971	Advanced Composites Design Guide, 3rd Edition, DOD/NASA

2.2 Non–Government Documents

The following documents of the latest issue shown, form a part of this specification to the extent specified herein. In the event of conflict between the documents referenced herein and the contents of this specification, the contents of this specification shall be considered a superseding requirement, except for higher tier documents.

2.2.1 Martin Marietta Astro Space Documents

20001390	Mass Properties Report for the EOS–AM Spacecraft
20008503L	Launch Vehicle Mechanical Interface Control Document
20008513	High Gain Antenna Assembly Mechanical ICD
20008514	Solar Array Mechanical ICD
20008618	Propulsion System Mechanical ICD
20008536 13 January 1993	EOS–AM Spacecraft Specification Tree
20008652	Critical Items List (PA–510)
20008655	Ground Systems Requirements Database
20008810 dated(TBD–3)	ASTER Interface Control Document
20008820	CERES Interface Control Document

20008830	MISR Interface Control Document
20008840	MODIS Interface Control Document
20008850 dated(TBD–4)	MOPITT Interface Control Document
3282190	Process Specification, Handling of Composite Tubes
IS20008501	General Interface Specification (GIS) for the EOS–AM Spacecraft (ICD–101)
IS20008503 30 April 1993	EOS–AM Spacecraft to Launch Vehicle Interface Requirements Document
PN20001412	Contamination Control Plan for the EOS–AM Spacecraft
PN20005397 17 January 1992	Performance Assurance Implementation Plan (PA–100)
PN20005404	Verification Plan (VP) for the Earth Observing System (VRD–100)
PN20005869	Electromagnetic Compatibility (EMC) Control Plan for the EOS–AM Spacecraft (SEP–106)
PN20008616 28 September 1992	Structural Verification Test Plan for EOS–AM Spacecraft
PN20008660 28 September 1992	EOS–AM Spacecraft Alignment Plan (SEP–121)
PS20005396	Contract End Item (CEI) Specification for the EOS–AM Spacecraft (SEP–101)
PS20005404	Verification Specification (VS) for the Earth Observing System (VRD–110)
PS20008549	Thermal Control Subsystem Specification (SP–201)
PS20008618	Propulsion Module Performance Specification
PIR–1D43–UHMS–044 31 August 1989	Preliminary UHMS/7714A Strut Tube Material Properties, B. T. Rodini
Source:	Martin Marietta Astro Space P. O. Box 800 Princeton, NJ 08543–0800

MIL–STD–1522A 01 July 1972	Standard General Requirements for Safe Design and Operation of Pressurized Missile and Space Systems
MIL–HDBK–5	Military Handbook, Metallic Materials and Elements for Aerospace Vehicle Structures, Rev. E, Change Notice 2
MIL–HDBK–17	Military Handbook, Polymer Matrix Composities, Vol. 1: Guidelines, Rev. B, Change Notice 1
MIL–HDBK–23A 30 December 1968	Structural Sandwich Composites
WSMCR 127–1 December 1989	Western Space and Missile Center Range Safety Regulations
AFML November 1971	Advanced Composites Design Guide, 3rd Edition, DOD/NASA

2.2 Non–Government Documents

The following documents of the latest issue shown, form a part of this specification to the extent specified herein. In the event of conflict between the documents referenced herein and the contents of this specification, the contents of this specification shall be considered a superseding requirement, except for higher tier documents.

2.2.1 Martin Marietta Astro Space Documents

20001390	Mass Properties Report for the EOS–AM Spacecraft
20008503L	Launch Vehicle Mechanical Interface Control Document
20008513	High Gain Antenna Assembly Mechanical ICD
20008514	Solar Array Mechanical ICD
20008618	Propulsion System Mechanical ICD
20008536 13 January 1993	EOS–AM Spacecraft Specification Tree
20008652	Critical Items List (PA–510)
20008655	Ground Systems Requirements Database
20008810 dated(TBD–3)	ASTER Interface Control Document
20008820	CERES Interface Control Document

3 REQUIREMENTS

[1] The SMS shall meet the requirements specified herein of all phases of the Spacecraft mission defined in the CEI Specification, PS20005396.

[2] The SMS shall support the Spacecraft operating modes applicable to each phase as defined in the CEI Specification, PS20005396.

3.1 SMS Definition

The SMS consists of the structures, mechanisms, and antenna restraint/deployment assemblies of the EOS Spacecraft.

Specifically the SMS consists of the following hardware: Primary structure, propulsion module (PM) structure, equipment module (EM) structures, instrument support structures, secondary structures, kinematic mounts (KMs), solar array drive (SAD), and high gain antenna (HGA) restraint/deployment system.

3.1.1 Item Diagrams

Not Applicable

3.1.2 Interface Definition

The mechanical and electrical interfaces that must exist between the SMS components and other Spacecraft components are defined on the SMS interface control drawings defined in Section 2.2.1.

[1] The SMS design shall be compatible with a launch vehicle which meets the requirements specified in the EOS–AM Spacecraft to Launch Vehicle Interface Requirements Document, IS20008503. The compatibility requirements shall include physical, mechanical, and environmental interface requirements.

[2] SMS components related to instrument support shall comply with the General Instrument Interface Specification (GIIS), GSFC 420–03–02, and the Unique Instrument Interface Documents (UIIDs) for interface requirements. If the UIIDs and the GIIS conflict, the UIIDs shall govern. UIID Instrument parameters defined in the CEI Specification, PS20005396, shall be used for Spacecraft Bus design activities.

3.1.2.1 Functional Interfaces

The SMS functional interfaces shall include the following:

a. Provide the structural support required to survive launch on an (TBD–5) intermediate launch vehicle (ILV) and separation from the launch vehicle (LV) without detrimental effects.

b. Provide accurate placement and alignment of housekeeping and instrument components.

c. Provide on–orbit stability and rigidity of structures to facilitate instrument sensing and stationkeeping control.

d. Provide the required mounting areas and optical and thermal fields–of–view (FOV) for all instruments and housekeeping components.

e. Provide for the deployment of all housekeeping equipment, with the exception of the solar array (SA), which requires mechanical reconfiguration from the launch configuration to the on–orbit configuration.

f. Provide modularity and accessibility of instruments and EMs at the Spacecraft level during integration and test (I&T).

g. Provide the capability to rotate or slew the SA to support power requirements in all post–deployment modes during all post–separation mission phases.

h. Provide mechanisms where needed at interfaces to limit relative thermal distortion and transfer of loads from the Spacecraft.

i. Provide the basic structural framework, mounting support, routing paths (for Electrical Accommodation Subsystem harness), attach points, and interface ports for all Instruments and assemblies.

The following subsections describe the function of each of the major components of the SMS.

3.1.2.1.1 Primary Structure

The primary structure provides the primary structural support for the Spacecraft subsystems and components such that deflection, frequency, stress, alignment, and thermal distortion requirements are met. Primary structure is defined as structure which is part of the primary load path from subsystems and components to the LV interface. The EOS–AM primary structure comprises the Spacecraft main truss structure.

3.1.2.1.2 Propulsion Module Structure

The PM structure supports all components of the propulsion subsystem, including the propellant tank, thrusters, PM electronics, and all associated PM hardware.

3.1.2.1.3 Secondary Structure

Secondary structure provides the interface between the miscellaneous equipment and the primary structure. Secondary structure includes, but is not limited to, the core harness supports, interface connector panels (ICPs), close–out panels, SAD support, and omni antenna supports.

The ICPs provide the necessary support structure for mounting connectors for harnesses which provide the power and communication interfaces to EMs and instruments.

3.1.2.1.4 Equipment Modules and Panels

The EMs provide mounting and protection from the on–orbit environment for all components mounted within. They also provide modular grouping by subsystem, where possible, in order to facilitate the I&T process. The EMs include the power EM; recorder EM; reaction wheel assembly

(RWA) EM; guidance, navigation, and control (GN&C) sensor EM; and the communications/command and data handling (Comm/C&DH) EM. Supplementary equipment panels include the battery panel and the direct access system (DAS) panel.

3.1.2.1.5 Instrument Accommodation Structures

Instrument accommodation structures consist of all secondary structures including instrument mounting plates (IMPs) which support instruments and their respective accommodation equipment off the primary structure. The instrument accommodation structures provide structural support, alignment capability, and mounting stiffness for instruments and associated accommodation equipment.

3.1.2.1.6 Kinematic Mounts

The kinematic mounts (KMs) provide the structural interface between primary and secondary structures and the instruments, IMPs, EMs, and equipment panels. Their function is to minimize thermal distortion and load sharing between the spacecraft structure and mounted equipment. The KMs perform this function by relieving loads in certain directions while providing stiffness in others. There are three types of KMs: 1–axis, 2–axis, and 3–axis load–carrying mounts. The number of axes refers to the number of directions in which load is transferred. The load relieving element in the KMs is a series of stainless steel spherical ball bearings which rotate only in specific directions in response to forces.

Non–alignment–critical and low load panels, i.e., Capillary Pumped Heat Transport System (CPHTS) radiator panels, close–out panels, instrument accommodation equipment panels, etc., are supported with a simplified kinematic mount called a Differential Shear Transfer (DST) mount. The load relieving element in these devices is a low friction polyimide washer which slides directly on the primary structure node fitting surface.

3.1.2.1.7 Solar Array Drive

The SAD provides the rotation capability to the SA so that continuous tracking of the sun can be achieved. In addition the SAD allows power transfer and provides a telemetry path between the array and the housekeeping bus.

3.1.2.1.8 High Gain Antenna Restraint/Deployment System

The HGA restraint/deployment system is used to restrain the HGA assembly during launch and to deploy the assembly upon receipt of the appropriate commands.

3.1.2.2 Physical Interfaces

[1] Similar physical interfaces shall be standardized.

[2] The SMS shall employ standard aerospace grade fasteners for structural and mechanical attachments where practical.

c. Provide on–orbit stability and rigidity of structures to facilitate instrument sensing and stationkeeping control.

d. Provide the required mounting areas and optical and thermal fields–of–view (FOV) for all instruments and housekeeping components.

e. Provide for the deployment of all housekeeping equipment, with the exception of the solar array (SA), which requires mechanical reconfiguration from the launch configuration to the on–orbit configuration.

f. Provide modularity and accessibility of instruments and EMs at the Spacecraft level during integration and test (I&T).

g. Provide the capability to rotate or slew the SA to support power requirements in all post–deployment modes during all post–separation mission phases.

h. Provide mechanisms where needed at interfaces to limit relative thermal distortion and transfer of loads from the Spacecraft.

i. Provide the basic structural framework, mounting support, routing paths (for Electrical Accommodation Subsystem harness), attach points, and interface ports for all Instruments and assemblies.

The following subsections describe the function of each of the major components of the SMS.

3.1.2.1.1 Primary Structure

The primary structure provides the primary structural support for the Spacecraft subsystems and components such that deflection, frequency, stress, alignment, and thermal distortion requirements are met. Primary structure is defined as structure which is part of the primary load path from subsystems and components to the LV interface. The EOS–AM primary structure comprises the Spacecraft main truss structure.

3.1.2.1.2 Propulsion Module Structure

The PM structure supports all components of the propulsion subsystem, including the propellant tank, thrusters, PM electronics, and all associated PM hardware.

3.1.2.1.3 Secondary Structure

Secondary structure provides the interface between the miscellaneous equipment and the primary structure. Secondary structure includes, but is not limited to, the core harness supports, interface connector panels (ICPs), close–out panels, SAD support, and omni antenna supports.

The ICPs provide the necessary support structure for mounting connectors for harnesses which provide the power and communication interfaces to EMs and instruments.

3.1.2.1.4 Equipment Modules and Panels

The EMs provide mounting and protection from the on–orbit environment for all components mounted within. They also provide modular grouping by subsystem, where possible, in order to facilitate the I&T process. The EMs include the power EM; recorder EM; reaction wheel assembly

[4] The SMS components shall accept heat from the thermal control subsystem (TCS) interface, as necessary, for maintenance of survival and operational temperatures.

3.1.3 Major Component List

The major components of the SMS shall be as listed in Table I.

Table I. SMS Component List

SMS Component	Quantity	Major Function	GFP/ GLP
Primary Structure	1	Supports Spacecraft bus and instruments	
PM Structure	1	Supports PM equipment	
Power EM Structure	1	Supports EPS equipment & batteries	
Recorder EM Structure	1	Supports C&DH equipment	
Comm/C&DH EM Structure	1	Supports Comm/C&DH equipment	
GN&C Sensor EM Structure	1	Supports GN&C equipment	
RWA EM Structure	1	Supports RWA equipment	
Battery Panel	1	Supports EPS batteries	
DAS Panel	1	Supports DAS equipment	
EM KMs	42	Supports EMs	
Close–Out Panels	10	Provides support for MLI	
Torque Rod Panel	1	Supports torque rods	
BDU Panels	2	Supports instrument accommodation equipment	
Instrument Accommodation Structures	4	Supports TIR, SWIR, MODIS, MOPITT	
Instrument Mounting Plates	2	Supports instruments and accommodation equipment	
Instrument Accommodation KMs	36	Supports instruments	
CPHTS Radiator Mounts	14	Supports CPHTS radiators	
HGA Support Structure	1	Supports HGA	
SAD & SAA Support Structure	1	Supports SAD & SAA	
Core Mounted Harness Brackets	1	Supports harness	
DAS Boom	1	Supports DAS antenna	
Omni Antenna Boom	2	Supports omni antennas	
SAD	1	Provides SA rotation and power transfer	

Table I. SMS Component List (Continued)

SMS Component	Quantity	Major Function	GFP/ GLP
HGA Deployment System	1	Provides HGA deployment	
Launch Vehicle Adapter	1	Provides structural interface to LV (External interface)	X
Launch Vehicle Separation System	1	Provides mechanism for Spacecraft separation from LV	X
Flight Termination System (FTS)(TBR–1)	1	Disperses propellant in the event of mission failure during launch	X
GFP = Government Furnished Property, GLP= Government Loaned Property			

3.2 Characteristics

3.2.1 Performance

The SMS shall meet the following performance characteristics within the allocated subsystem mass defined herein:

a. The SMS shall provide a structure designed to support a maximum EOS Spacecraft mass of 11,060 lbs, including the Spacecraft bus, propellant, and instruments. This mass excludes 350 lbs of LV interface equipment.

b. The SMS shall comply with the interface requirements of the EOS–AM instrument set defined in the CEI Specification, PS20005396, and described in the UIIDs.

c. The SMS shall comply with the instrument interface requirements specified in the GIIS, 420–03–02.

d. The SMS shall comply with the LV interface requirements specified in IS20008503.

e. The structure shall be designed to limit deflections such that no Spacecraft hardware protrudes through the dynamic envelope of the LV fairing as specified in Figure (TBD–6) of IS20008503, Launch Vehicle IRD, when exposed to the launch environment.

f. The structure shall be designed to a loading environment which envelopes both the Titan IV (NUS) and Atlas IIAS launch environments. This loading environment shall be derived by performing coupled loads analysis at SMS Preliminary Design Review (PDR) and SMS Critical Design Review (CDR)(TBR–2). The final verification coupled loads analysis shall be performed based on the test–verified math model of the spacecraft to verify the design adequacy prior to launch.

g. All composite structures and bonds shall be capable of withstanding up to 1.25 times flight limit load levels as derived from the final design loads cycle (FDLC) analysis.

h. Structural hardware shall show positive margins of safety through all environments defined in Section 3.2.7.

i. EMs shall be sufficiently modular to allow parallel build–up during integration and to allow installation of EMs on the Spacecraft assembly.

j. EM layouts shall, to the extent practical, maximize access to components at the Spacecraft assembly level of integration.

k. The SMS shall provide structural support for the instrument mass in accordance with the UIID mass allocation.

l. The structure shall be designed such that no Spacecraft hardware protrudes through the static envelope of the LV fairing defined in the LV MICD, 20008503L (see Figure 1).

m. The SMS shall be designed to permit shimming of plate–mounted instruments at the interface between the KMs and the Spacecraft structure.

3.2.1.1 Command and Telemetry Support

3.2.1.1.1 Telemetry

[1] The SMS shall provide telemetry sensors, as defined in Appendix II, to obtain health and status information, monitor critical component temperatures and SMS functions, and assist in fault detection and correction.

[2] The SMS telemetry shall be available in all ground and flight phases of the mission.

3.2.1.1.2 Commandability

[1] The SMS command requirements shall be those defined in Appendix II.

[2] The SMS components shall be commandable to known states regardless of earlier states.

[3] The SMS commands which have different functionality depending on current state (e.g., toggle commands) shall not be permitted.

[4] The SMS shall accept and execute commands to override or inhibit the execution of automatic functions which may interfere with Spacecraft operations or jeopardize the health of the Spacecraft.

[5] No single SMS command shall place the Spacecraft into a configuration from which it cannot recover.

[6] The SMS shall accept and execute commands delivered to it via the C&DHS.

[7] The SMS shall execute commands immediately upon receipt.

[8] The SMS shall accept and execute commands to reconfigure the subsystem as necessary to support Spacecraft mode transitions or SMS redundancy management.

3.2.1.2 Pointing Error Contributions

[1] The SMS shall meet the pointing knowledge, pointing accuracy, and pointing stability/jitter requirements specified in Sections 3.7.1.1.5 and 3.7.1.1.6 of the CEI Specification, PS20005396.

Table I. SMS Component List (Continued)

SMS Component	Quantity	Major Function	GFP/ GLP
HGA Deployment System	1	Provides HGA deployment	
Launch Vehicle Adapter	1	Provides structural interface to LV (External interface)	X
Launch Vehicle Separation System	1	Provides mechanism for Spacecraft separation from LV	X
Flight Termination System (FTS)(TBR–1)	1	Disperses propellant in the event of mission failure during launch	X
GFP = Government Furnished Property, GLP= Government Loaned Property			

3.2 Characteristics

3.2.1 Performance

The SMS shall meet the following performance characteristics within the allocated subsystem mass defined herein:

a. The SMS shall provide a structure designed to support a maximum EOS Spacecraft mass of 11,060 lbs, including the Spacecraft bus, propellant, and instruments. This mass excludes 350 lbs of LV interface equipment.

b. The SMS shall comply with the interface requirements of the EOS–AM instrument set defined in the CEI Specification, PS20005396, and described in the UIIDs.

c. The SMS shall comply with the instrument interface requirements specified in the GIIS, 420–03–02.

d. The SMS shall comply with the LV interface requirements specified in IS20008503.

e. The structure shall be designed to limit deflections such that no Spacecraft hardware protrudes through the dynamic envelope of the LV fairing as specified in Figure (TBD–6) of IS20008503, Launch Vehicle IRD, when exposed to the launch environment.

f. The structure shall be designed to a loading environment which envelopes both the Titan IV (NUS) and Atlas IIAS launch environments. This loading environment shall be derived by performing coupled loads analysis at SMS Preliminary Design Review (PDR) and SMS Critical Design Review (CDR)(TBR–2). The final verification coupled loads analysis shall be performed based on the test–verified math model of the spacecraft to verify the design adequacy prior to launch.

g. All composite structures and bonds shall be capable of withstanding up to 1.25 times flight limit load levels as derived from the final design loads cycle (FDLC) analysis.

[2] The SMS shall permit the operation of each instrument independent of that of other instruments. These operations will not cause the instrument set to exceed the total resource limits described in the CEI Specification, PS20005396.

3.2.2 Operational Modes

3.2.2.1 Stowed Mode

[1] The SMS shall be in stowed mode during the launch/ascent phase of the mission when the Spacecraft is in survival mode.

[2] The SMS stowed mode configuration shall include the stowed SA and HGA.

3.2.2.2 Deployed Mode

[1] The SMS shall be in deployed mode following completion of the SA and HGA deployments when the Spacecraft is in science, delta–velocity, standby, survival, or safe mode.

[2] The SMS deployed mode configuration shall include the deployed SA and HGA.

3.2.2.3 Transition Mode Between Stowed Mode and Deployed Mode

[1] The SMS shall enter the transition mode immediately upon receipt of a command to deploy the SA.

[2] The SMS shall exit from transition mode only when the HGA has been successfully deployed.

3.2.2.4 Safe Mode

[1] The SMS shall enter safe mode immediately upon receipt of a command to do so.

[2] The SMS shall exit from safe mode only when commanded to do so.

3.2.3 Physical Characteristics

A right–hand, orthogonal, body–fixed reference coordinate system shall be used for the Spacecraft.

3.2.3.1 Mass

[1] The mass of the SMS shall not exceed the allocation of 3460 lbs.

[2] The center–of–mass, products of inertia, and mass estimate accuracies shall be as defined in Section 4 of IS20008501.

3.2.3.2 Durability

[1] The SMS shall be made up only of materials and components capable of withstanding the environmental conditions specified in Section 3.2.7 without evidence of damage as defined below.

[2] The SMS shall also be capable of withstanding, without evidence of physical damage (as defined below), any wear due to the functioning of the system.

[3] Damage shall be considered to be any change in the SMS which may degrade subsystem performance to levels below those specified herein.

[4] The SMS shall be capable of meeting all operational requirements as specified herein, in the environments specified in Section 3.2.7.4 for the duration of five years in orbit.

3.2.3.3 Layout and Dimensions

The Spacecraft mechanical layout shall be such that all instruments and components are packaged within an Atlas IIAS standard fairing envelope that has been stretched by 36 inches as depicted in Figure 1.

3.2.3.4 Maintainability Impact on Design

[1] To the extent practical, the SMS shall facilitate ground maintenance by being functionally, mechanically, and electrically independent from all other Spacecraft elements except as stated in Section 3.1.2 herein

[2] and by being modular to the extent practical to facilitate I&T. Areas of modularity include the EM structures and the PM structure.

[3] The SMS shall be designed to use existing GSE, wherever practical, rather than requiring the design of new equipment. Existing GSE includes the Spacecraft sling and Mobile Environmental Test Stand (METS).

3.2.3.5 Handling Features

The SMS and/or GSE designs shall include handling features which minimize the likelihood of damage to any flight equipment or personnel using the equipment.

3.2.4 Power Characteristics

The SMS shall meet the performance requirements specified herein when supplied power as specified in Section 3 of the GIS, IS20008501.

3.2.5 Power Usage

The SMS shall draw power only within the bounds indicated in Table II.

Table II. SMS Power Resource Allocation

Mode	Minimum (W)	Maximum (W)
Ground Test	0	0
Launch/Ascent	0	0
Standby	0	0
Delta–V	0	0
Science	0	0
Survival	0	0
Safe	0	0

3.2.5.1 Power Exclusion Rules

Not Applicable

3.2.6 Reliability

[1] The probability of mission success (P_S) design goal for the SMS shall be at least 0.999 for a five–year mission life. Mission success is defined as meeting all of the performance criteria specified in Section 3.2.1.

[2] The SMS reliability calculations shall comply with the Reliability Assessment requirements of the PAR, 420–05–02.

3.2.6.1 Storage Restrictions

Limited–life components which may require change–out during storage shall be identified and tracked in the Critical Items List, 20008652.

3.2.6.2 Vulnerability Factors

[1] Steps shall be taken to reduce the risk of damage to hardware which is susceptible to damage. The following steps shall be taken to reduce vulnerability to damage:

a. Graphite/Epoxy (Gr/Ep) tubes shall be covered with a protective wrapping during I&T operations, where practical, in accordance with the Process Specification for Handling of Composite Tubes, 3282190.

b. KM interfaces for pointing critical components shall be covered with a protective wrapping during I&T operations, where practical.

[2] Controls and actuators for calibration or adjustment shall incorporate mechanical stops where necessary to prevent damage.

[3] Sensitive adjustment controls and actuators shall be located or guarded to protect them from inadvertent perturbation.

[2] The SMS shall also be capable of withstanding, without evidence of physical damage (as defined below), any wear due to the functioning of the system.

[3] Damage shall be considered to be any change in the SMS which may degrade subsystem performance to levels below those specified herein.

[4] The SMS shall be capable of meeting all operational requirements as specified herein, in the environments specified in Section 3.2.7.4 for the duration of five years in orbit.

3.2.3.3 Layout and Dimensions

The Spacecraft mechanical layout shall be such that all instruments and components are packaged within an Atlas IIAS standard fairing envelope that has been stretched by 36 inches as depicted in Figure 1.

3.2.3.4 Maintainability Impact on Design

[1] To the extent practical, the SMS shall facilitate ground maintenance by being functionally, mechanically, and electrically independent from all other Spacecraft elements except as stated in Section 3.1.2 herein

[2] and by being modular to the extent practical to facilitate I&T. Areas of modularity include the EM structures and the PM structure.

[3] The SMS shall be designed to use existing GSE, wherever practical, rather than requiring the design of new equipment. Existing GSE includes the Spacecraft sling and Mobile Environmental Test Stand (METS).

3.2.3.5 Handling Features

The SMS and/or GSE designs shall include handling features which minimize the likelihood of damage to any flight equipment or personnel using the equipment.

3.2.4 Power Characteristics

The SMS shall meet the performance requirements specified herein when supplied power as specified in Section 3 of the GIS, IS20008501.

3.2.5 Power Usage

The SMS shall draw power only within the bounds indicated in Table II.

[3] Test levels shall be as defined in the Verification Specification, PS20005404.

[4] Damage shall be as defined in Section 3.2.3.2.

3.2.7.1 Storage, Integration and Test

The SMS shall be capable of being held for testing or storage for the period defined in Section 6 of IS20008501, under the prelaunch conditions stated there for [1] thermal, [2] contamination, [3] humidity, and [4] EMI, without suffering any damage as defined in Section 3.2.3.2.

3.2.7.2 Shipment

The SMS shall abide by the following transportation environmental requirements as defined in Section 6 of IS20008501: [1] thermal, [2] contamination, [3] humidity, [4] EMI, [5] loads, and [6] shock. The EOS Spacecraft is assumed to be in a horizontal orientation for all air transportation and either a horizontal or vertical orientation for all ground vehicle transportation.

3.2.7.3 Launch

3.2.7.3.1 Acceleration

[1] The primary structure shall be designed for the quasi–static loads defined in Section 10.9.2.4.3 of Appendix I.

[2] EMs, instrument accommodation structures, and radiator panels shall be designed to the quasi–static load factors defined in Section 10.9.2.5 of Appendix I.

[3] The SA and HGA shall be designed to the quasi–static load factors defined in Section 10.9.2.5 of Appendix I.

[4] Secondary structures shall be designed to the acceleration specified in Section 6 of IS20008501, where component mass shall be defined as the cumulative mass supported by the secondary structure plus the mass of the secondary structure.

[5] All hardware shall show positive margins of safety with appropriate factors of safety when the above accelerations are applied.

3.2.7.3.2 Acoustic

All components of the SMS shall be designed to the acoustic levels specified in Section 6 of IS20008501 and in Appendix I of this document.

3.2.7.3.3 Random Vibration

All structures and mechanisms shall be designed to the random vibration levels specified in Appendix I of this document.

3.2.7.3.4 Shock

All components of the SMS shall be designed to the shock levels specified in Appendix I of this document.

3.2.7.3.5 Pressure

All components of the SMS shall be designed to accommodate the ascent pressure profile defined in Section 6 of IS20008501.

3.2.7.3.6 Sine Vibration

All components of the SMS shall be designed to the sine vibration levels specified in Appendix I of this document.

3.2.7.3.7 Temperature

The primary structure shall be designed to withstand the following temperature ranges during launch:

[1]	Bays 1 and 2	15 to 35°C(TBR–3)
[2]	Bays 3 and 4	10 to 40°C(TBR–4)
[3]	Bays 5, 6, and 7	10 to 45°C(TBR–5)

3.2.7.4 On–orbit

3.2.7.4.1 Acceleration

[1] All appendages shall be designed to withstand all accelerations produced by the initial delta–velocity and on–orbit maneuvers.

[2] The limit design accelerations shall be 0.015 gravities.

[3] All deployable appendage structures shall be designed to withstand the environments produced by the deployment, including accelerations, transients, and shock.

3.2.7.4.2 Temperature

All components of the SMS shall be designed to perform their respective functions within the on–orbit temperature ranges specified in the Thermal Control Subsystem Specification, PS20008549.

3.2.7.5 Electromagnetic Radiation

[1] The SMS shall meet the requirements specified by the EMC Control Plan, PN20005869.

[2] The SMS and its components shall comply with the ionizing radiation design requirements specified in Section 6 of IS20008501.

3.2.7.6 Contamination

The SMS shall comply with the contamination requirements defined in the PAR, 420–05–02, and with the requirements allocated to the SMS via the Instrument Contamination Control Plans (TBD–7) and the Contamination Control Plan for the EOS–AM Spacecraft, PN20001412.

3.3 Design and Construction

3.3.1 Material, Processes, Parts, and Finishes

All materials, manufacturing processes, parts and finishes shall be selected in accordance with the corresponding requirements in Section 4 of IS20008501.

3.3.1.1 Properties of Materials

[1] Properties of materials to be used in the design of structural hardware shall be in accordance with MIL–HDBK–5, MIL–HDBK–17, or other sources approved by NASA GSFC.

[2] Properties not given in these documents, such as for composites, shall be obtained from published data or by material testing approved by NASA GSFC.

[3] When using MIL–HDBK–5, material "A" allowable values shall be used where failure of a single metallic load path would result in loss of structural integrity.

3.3.2 Nameplates and Product Marking

All SMS elements shall be labeled in accordance with Section 4 of IS20008501.

3.3.3 Workmanship

[1] Workmanship during fabrication of the SMS electrical components shall be in accordance with NASA standards as specified in NHB 5300.4 (3A, 3G–3K).

[2] The SMS components shall be fabricated and finished in a manner that satisfies accepted criteria of appearances and neatness. Particular attention shall be given to neatness and thoroughness of welding, marking of parts and assemblies, brazing and freedom from burrs, sharp edges, and loose materials.

3.3.4 Interchangeability

SMS elements shall be interchangeable as defined in Section 4 of IS20008501, except as identified in Section 6.3.

3.2.7.3.4 Shock

All components of the SMS shall be designed to the shock levels specified in Appendix I of this document.

3.2.7.3.5 Pressure

All components of the SMS shall be designed to accommodate the ascent pressure profile defined in Section 6 of IS20008501.

3.2.7.3.6 Sine Vibration

All components of the SMS shall be designed to the sine vibration levels specified in Appendix I of this document.

3.2.7.3.7 Temperature

The primary structure shall be designed to withstand the following temperature ranges during launch:

[1]	Bays 1 and 2	15 to 35°C(TBR–3)
[2]	Bays 3 and 4	10 to 40°C(TBR–4)
[3]	Bays 5, 6, and 7	10 to 45°C(TBR–5)

3.2.7.4 On–orbit

3.2.7.4.1 Acceleration

[1] All appendages shall be designed to withstand all accelerations produced by the initial delta–velocity and on–orbit maneuvers.

[2] The limit design accelerations shall be 0.015 gravities.

[3] All deployable appendage structures shall be designed to withstand the environments produced by the deployment, including accelerations, transients, and shock.

3.2.7.4.2 Temperature

All components of the SMS shall be designed to perform their respective functions within the on–orbit temperature ranges specified in the Thermal Control Subsystem Specification, PS20008549.

3.2.7.5 Electromagnetic Radiation

[1] The SMS shall meet the requirements specified by the EMC Control Plan, PN20005869.

3.3.7 Mass Properties

3.3.7.1 Spacecraft Center of Gravity Requirements

[1] The Spacecraft center of gravity (CG) shall be within the limits specified in the LV IRD.

[2] The SMS shall meet the design goal for the maximum Spacecraft radial CG offset from the LV geometric center line of 2.0 inches.

[3] The SMS shall meet the design goal for the maximum X CG defined from the Spacecraft separation plane of 116.0 inches.

[4] These design goals shall be achieved within the allocated Spacecraft mass.

3.4 Documentation

3.4.1 Specifications

All parent and component specifications associated with the SMS specification are shown in the EOS–AM Spacecraft Specification Tree, 20008536.

3.4.2 Drawings

[1] Drawings shall be prepared in accordance with DOD–D–1000 (level 2) and DOD–STD–100.

[2] Installation drawings shall be generated for all major subassemblies which are mounted to the primary structure.

[3] The installation drawings shall identify the minimum clearances between the subassembly and primary structure consistent with the level of assembly at the time of installation.

[4] The installation drawings shall outline the major steps of the assembly and identify the appropriate procedures used in the installation.

3.4.3 Reports

3.4.3.1 Mass Properties

[1] A mass properties report shall be generated on a bimonthly basis or as required to identify the current status of the Spacecraft mass properties.

[2] As a minimum, reporting shall be at the Spacecraft level and indicate mass, center of gravity, moments of inertia, and products of inertia.

[3] The report shall provide values for the major configuration modes of the Spacecraft.

[4] The report shall identify the accuracy of each component mass (i.e., estimated, calculated, or measured).

3.4.3.2 Structural Analysis

[1] Analysis reports shall be generated to document coupled loads analysis model inputs and final results.

[2] All member loads exceeding allowable values shall be addressed in the final report.

[3] Finite Element Models (FEMs) used in the verification of requirements shall be documented.

3.4.4 Technical Manuals

Not Applicable

3.4.5 Test Plans

The test plans defined below shall be generated and updated as required:

a. EOS–AM Spacecraft Alignment Plan, PN20008660

b. Structural Verification Test Plan for EOS–AM Spacecraft Primary Subsystems, PN20008616

3.4.6 Procedures (TBD–8)

3.4.7 Installation Instructions

Integration Procedures and Records (IPRs) generated by I&T shall be reviewed to ensure compliance with installation drawings.

3.4.8 Operational Requirements Documentation

All operational requirements and constraints shall be documented in Ground System Requirements Database, 20008655.

3.5 Logistics

3.5.1 Maintenance

[1] The SMS shall be designed to require no maintenance after testing other than that required during long periods of storage as specified in Section 3.2.6.1.

[2] Items which for safety reasons may require rapid prelaunch maintenance shall be readily accessible.

[3] Items requiring frequent access during I&T or other prelaunch operations shall be accessible during I&T.

[4] All SMS flight equipment which would require maintenance during a storage period defined in the CEI Specification, PS20005396, shall be accessible to the persons or contractor equipment performing the maintenance.

[5] Sealed hardware shall allow access by leak detection apparatus at the highest level of assembly, as practical. This includes the CPHTS and PM tank.

3.5.2 Supply

The following component shall have spares available during ground activities:

a. KMs

3.6 Precedence

3.6.1 Precedence of Design Criteria

SMS design decisions shall be made to accommodate the following design criteria in the following order of precedence:

a. Safety

b. Performance

c. Reliability

d. Cost

3.6.2 Documentation Precedence

If conflicts arise between documents, the SMS shall adhere to design requirements as stated in the document nearest the top of the following list of requirement documents. The General Interface Specification (GIS) is applicable to the SMS design only as invoked herein and is therefore not included in the following list:

a. Performance Assurance Requirements for the EOS Observatories (PAR)

b. General Instrument Interface Specification (GIIS)

c. Contract End Item (CEI) Specification

d. External Interface Control Documents (ICDs) (e.g., EOS to Launch Vehicle, etc.)

e. Subsystem and Major Assembly Specifications

f. Component Specifications

[4] The report shall identify the accuracy of each component mass (i.e., estimated, calculated, or measured).

3.4.3.2 Structural Analysis

[1] Analysis reports shall be generated to document coupled loads analysis model inputs and final results.

[2] All member loads exceeding allowable values shall be addressed in the final report.

[3] Finite Element Models (FEMs) used in the verification of requirements shall be documented.

3.4.4 Technical Manuals

Not Applicable

3.4.5 Test Plans

The test plans defined below shall be generated and updated as required:

a. EOS–AM Spacecraft Alignment Plan, PN20008660

b. Structural Verification Test Plan for EOS–AM Spacecraft Primary Subsystems, PN20008616

3.4.6 Procedures (TBD–8)

3.4.7 Installation Instructions

Integration Procedures and Records (IPRs) generated by I&T shall be reviewed to ensure compliance with installation drawings.

3.4.8 Operational Requirements Documentation

All operational requirements and constraints shall be documented in Ground System Requirements Database, 20008655.

3.5 Logistics

3.5.1 Maintenance

[1] The SMS shall be designed to require no maintenance after testing other than that required during long periods of storage as specified in Section 3.2.6.1.

[2] Items which for safety reasons may require rapid prelaunch maintenance shall be readily accessible.

[2] The primary structure shall be designed to support the total allocated instrument mass defined in the UIIDs.

[3] The primary structure when fixed at the separation plane shall meet the frequency goals defined in Table VIII.

[4] The primary structure shall be designed to the quasi–static loads specified in Section 10.9.2.4.3 of Appendix I.

[5] The primary structure shall minimize on–orbit distortions due to induced thermal gradients and bulk temperature changes as necessary to meet the pointing knowledge allocations specified in the CEI Specification, PS20005396.

[6] The primary structure shall provide pickup points for ground handling for both the vertical and horizontal Spacecraft orientations.

[7] The primary structure shall provide standard interfaces for EMs, instruments, and instrument accommodation structures to facilitate I&T at the Spacecraft level.

[8] The primary structure shall be capable of accommodating a modular propulsion module.

3.7.2.2 Propulsion Module Structure

[1] The PM structure shall be designed to support the maximum propellant load required to meet the mission life, as well as all PM components listed in the Propulsion Module Performance Specification, PS20008618.

[2] The PM structure, when fixed at the primary structure interface points consistent with the launch configuration boundary conditions, shall have a minimum resonant frequency as defined in Table IX.

[3] The PM structure shall be designed to the quasi–static loads specified in Table XV.

[4] The PM structure shall be of modular design to facilitate on–ground installation, removal, and replacement.

[5] The PM structure shall provide pickup points to support ground handling in both horizontal and vertical positions.

[6] The PM structure shall provide dedicated mechanical GSE points for installation and removal onto/from the Spacecraft.

3.7.2.3 Equipment Module Structures

[1] The EM structures shall be designed to support the cumulative mass of the components mounted within, including the appropriate contingency.

[2] The EM structures shall be kinematically mounted to the primary structure to the extent possible in order to minimize the sharing of primary structure loads.

[3] The EM structures, when fixed at the primary structure interface points consistent with the launch configuration boundary conditions, shall have a first fundamental mode as defined in Table IX.

[4] The EM structures shall be designed to the quasi–static loads specified in Section 10.9.2.5 of Appendix I.

[5] The EM structures shall be sufficiently modular to allow on–ground removal and replacement onto the Spacecraft assembly.

[6] EMs shall be designed to accommodate embedded and/or surface mounted heat pipes for thermal control.

[7] The GN&C sensor EM shall be designed to minimize thermal distortion due to thermal gradients and bulk temperature changes as necessary to meet the pointing knowledge allocations specified in the CEI Specification, PS20005396.

[8] EM design shall preclude improper installation to the Spacecraft, where practical.

3.7.2.4 Instrument Accommodation Structures

[1] The instrument accommodation structures shall be designed to support the instrument allocated mass, as specified in the respective UIIDs and MICDs, and all associated instrument accommodation equipment.

[2] The instrument accommodation structures shall meet the frequency criteria and load requirements specified in the GIIS, 420–03–02, and respective UIIDs.

[3] All instrument accommodation structure mechanical interfaces shall be consistent with the GIIS, 420–03–02, and respective UIIDs and MICDs.

[4] The instrument accommodation structures shall contribute to meeting the specific pointing requirements of the respective instruments, as defined in the UIIDs.

3.7.2.5 Secondary Structure

[1] Secondary structures shall support the entire mass allocation of the component(s) supported.

[2] All secondary structures shall be designed to minimize dynamic interaction with the primary structure.

[3] The secondary structure shall be designed by applying the load factor specified in Figure 3 to the mass of the component supported.

[4] Secondary structure shall be provided as required to support ascent telemetry harnesses routed to the launch vehicle interface.

[5] ICPs shall provide the ground path between connector shells and the spacecraft signal reference plane.

3.7.2.6 Kinematic Mounts

[1] The KMs shall be designed to support all mechanical loads from the EMs, CPHTS radiators, and instrument accommodation structures and instruments.

[2] The KMs when incorporated as a set shall be designed to minimize load sharing between mounted components and the Spacecraft structure.

[3] KMs shall have a provision for alignment adjustment during Spacecraft integration.

[4] The interface to the structure shall be standardized for all KM types.

[5] The interface to the EMs shall be standardized for all KM types.

[6] The KMs shall provide electrical isolation in accordance with the requirements of the EMC Control Plan, PN20005869.

[7] The KMs shall meet the interface requirements defined in the GIS, IS20008501, and GIIS, 420–03–02.

3.7.2.7 Solar Array Drive

[1] The direction of forward rotation of the SA shall be defined as clockwise (cw) rotation of the SAD shaft when viewing the SAD output shaft from the SA.

[2] There shall be a stationary position and three precise rates of rotation of the output SAD shaft during on–orbit operations, defined as:

a. $1\omega = 0.060°$/second ± 4.1% in 0.032% increments

b. $2\omega = 0.121°$/second ± 4.1% in 0.032% increments

c. $3\omega = 0.182°$/second ± 4.1% in 0.032% increments

[3] The SAD shall be capable of stopping the rotation of the SA on command and holding the array at any angular position.

[4] The SAD shall support its entire mass in the launch configuration.

[5] The SAD, when coupled to its support structure in the launch configuration, shall have a fixed base frequency as defined for components in Table IX.

[6] The SAD shall be designed to the launch environments specified in Appendix I.

[7] The SAD shall be capable of supporting the deployed SA when fully extended.

3.7.2.8 High Gain Antenna Restraint/Deployment System

[1] The HGA restraint system shall support all launch loads specified in Table XV.

[3] The EM structures, when fixed at the primary structure interface points consistent with the launch configuration boundary conditions, shall have a first fundamental mode as defined in Table IX.

[4] The EM structures shall be designed to the quasi–static loads specified in Section 10.9.2.5 of Appendix I.

[5] The EM structures shall be sufficiently modular to allow on–ground removal and replacement onto the Spacecraft assembly.

[6] EMs shall be designed to accommodate embedded and/or surface mounted heat pipes for thermal control.

[7] The GN&C sensor EM shall be designed to minimize thermal distortion due to thermal gradients and bulk temperature changes as necessary to meet the pointing knowledge allocations specified in the CEI Specification, PS20005396.

[8] EM design shall preclude improper installation to the Spacecraft, where practical.

3.7.2.4 Instrument Accommodation Structures

[1] The instrument accommodation structures shall be designed to support the instrument allocated mass, as specified in the respective UIIDs and MICDs, and all associated instrument accommodation equipment.

[2] The instrument accommodation structures shall meet the frequency criteria and load requirements specified in the GIIS, 420–03–02, and respective UIIDs.

[3] All instrument accommodation structure mechanical interfaces shall be consistent with the GIIS, 420–03–02, and respective UIIDs and MICDs.

[4] The instrument accommodation structures shall contribute to meeting the specific pointing requirements of the respective instruments, as defined in the UIIDs.

3.7.2.5 Secondary Structure

[1] Secondary structures shall support the entire mass allocation of the component(s) supported.

[2] All secondary structures shall be designed to minimize dynamic interaction with the primary structure.

[3] The secondary structure shall be designed by applying the load factor specified in Figure 3 to the mass of the component supported.

[4] Secondary structure shall be provided as required to support ascent telemetry harnesses routed to the launch vehicle interface.

[5] ICPs shall provide the ground path between connector shells and the spacecraft signal reference plane.

4 QUALITY ASSURANCE PROVISIONS

The requirements for the formal verification of the performance, design, and construction of the SMS shall be as specified in this section. These requirements define the extent to which the SMS must demonstrate capability to meet the design and performance requirements specified in Sections 3.2 and 3.3 of this document.

4.1 SMS Verification

Verification of each Section 3.2 and 3.3 requirement shall be performed as defined in the Verification Matrix, Attachment A (provided under separate cover).

4.1.1 Verification Phases

Phases shall be either acceptance or qualification as defined in the Verification Specification, PS20005404.

4.1.2 Verification Methods

The following methods shall be used as appropriate to verify each of the requirements in Sections 3.2 and 3.3: Demonstration, Test, Analysis, and/or Inspection. Each method shall be as defined in the Verification Specification, PS20005404.

4.1.3 Responsibility for Verification

Martin Marietta Astro Space (Astro Space) shall verify each requirement specified in Sections 3.2 and 3.3 of this document except: None Identified To Date.

4.1.4 Verification Conditions

Verification conditions for the SMS components shall be according to the Verification Specification, PS20005404.

4.2 Testing

4.2.1 Reliability testing

Life tests shall be performed on the SAD to verify operation over the mission life.

4.2.2 Engineering Evaluation and Test Requirements

4.2.2.1 Verification Tubes Development Test

Static testing to failure shall be performed on sets of Gr/Ep tubes/assemblies using the largest diameter tube to verify production methods and prime manufacturing tools. The minimum set size shall be five samples for each test type. The method of testing shall be tension, compression and bending. Torsional testing can be performed in lieu of bending if it is identified as a primary mode of failure.

4.2.2.2 Engineering Development Model (EDM) Tests

EDMs shall be used prior to production of flight hardware to reduce risk and verify design concepts and basic functionality of components that are of new design. The following components shall have EDMs built and tested:

a. Kinematic Mounts

b. Solar Array Drive

c. Power EM

The SAD EDM shall undergo an accelerated life test to a number of cycles greater than the expected number of cycles during normal operation.

4.2.3 Acceptance Testing

Acceptance testing shall be in accordance with the Verification Specification, PS20005404.

4.2.4 Qualification Testing

Qualification testing shall be in accordance with the Verification Specification, PS20005404.

4.2.5 Installation Testing and Checkout

Installation testing shall be in accordance with the Verification Specification, PS20005404.

4.3 Special SMS Verifications

Any SMS units identified on the limited–life or critical items lists shall be tested in accordance with the Verification Plan, PS20005404.

4.4 Test Equipment

[1] Existing test equipment shall be used wherever practical.

[2] Where new test equipment is required to test units which are physically or functionally identical or similar, the equipment shall be designed to perform its task(s) on each element of that group, where practical.

4.4.1 Test Equipment Safety Features

[1] Test equipment shall incorporate any safety interlocks or other safety features necessary to reduce the introduction of safety hazards by the test equipment.

[2] Any safety feature included in any Spacecraft test equipment shall give a visual, auditory, or electronic indication of activation when it is activated.

4.4.2 Test Equipment Verification

Unless otherwise specified herein, test equipment used to measure SMS performance characteristics shall be capable of demonstrating that:

a. it will not impose environments on the tested item(s) beyond the levels called for in the Verification Specification, PS20005404, and

b. it is capable of imposing the test levels called for in the Verification Specification, PS20005404.

4.4.3 Test Equipment Calibration

Test equipment shall be calibrated in accordance with the PAR, 420–05–02.

4.5 Verification Documentation

The subsystem verification activities shall be documented in:

a. Verification Reports as defined in PS20005404.

b. Test procedures

c. Test logs

d. Test Review Board meeting minutes

4.2.2.2 Engineering Development Model (EDM) Tests

EDMs shall be used prior to production of flight hardware to reduce risk and verify design concepts and basic functionality of components that are of new design. The following components shall have EDMs built and tested:

a. Kinematic Mounts

b. Solar Array Drive

c. Power EM

The SAD EDM shall undergo an accelerated life test to a number of cycles greater than the expected number of cycles during normal operation.

4.2.3 Acceptance Testing

Acceptance testing shall be in accordance with the Verification Specification, PS20005404.

4.2.4 Qualification Testing

Qualification testing shall be in accordance with the Verification Specification, PS20005404.

4.2.5 Installation Testing and Checkout

Installation testing shall be in accordance with the Verification Specification, PS20005404.

4.3 Special SMS Verifications

Any SMS units identified on the limited–life or critical items lists shall be tested in accordance with the Verification Plan, PS20005404.

4.4 Test Equipment

[1] Existing test equipment shall be used wherever practical.

[2] Where new test equipment is required to test units which are physically or functionally identical or similar, the equipment shall be designed to perform its task(s) on each element of that group, where practical.

4.4.1 Test Equipment Safety Features

[1] Test equipment shall incorporate any safety interlocks or other safety features necessary to reduce the introduction of safety hazards by the test equipment.

[2] Any safety feature included in any Spacecraft test equipment shall give a visual, auditory, or electronic indication of activation when it is activated.

5 PREPARATION FOR DELIVERY

The SMS assemblies shall be handled, packaged, and transported in accordance with the requirements given in NHB 6000.1C.

(This page intentionally left blank.)

6 NOTES

6.1 Definitions

6.2 Acronyms and Abbreviations

BECO	Boost Engine Cut–Off
BPJ	Booster Package Jettison
CDR	Critical Design Review
CEI	Contract End Item
CG	Center of Gravity
Comm	Communications
CPHTS	Capillary Pumped Heat Transport System
CSS	Coarse Sun Sensor
C&DH	Command and Data Handling
C&DHS	Command and Data Handling Subsystem
DAS	Direct Access System
DUF	Dynamic Uncertainty Factor
DST	Differential Shear Transfer
EAS	Electrical Accommodations Subsystem
EM	Equipment Module
EMC	Electromagnetic Compatibility
EMI	Electromagnetic Interference
EOS	Earth Observing System
EPS	Electrical Power Subsystem
FDLC	Final Design Loads Cycle
FEM	Finite Element Model
FOV	Field of View
FTS	Flight Termination System
GFP	Government Furnished Property
GIS	General Interface Specification
GIIS	General Instrument Interface Specification
GLP	Government Loaned Property

(This page intentionally left blank.)

PMO	Program Management Office
RWA	Reaction Wheel Assembly
SA	Solar Array
SAD	Solar Array Drive
S/C	Spacecraft
SDM	Structural Development Model
SECO	Secondary Engine Cut–Off
SMS	Structures and Mechanisms Subsystem
SSU	Sequential Shunt Unit
TBD	To Be Determined
TBR	To Be Resolved or To Be Revised
TBS	To Be Supplied
TR	Tape Recorder
UIID	Unique Instrument Interface Document
VLC	Verification Loads Cycle
VP	Verification Plan
VS	Verification Specification

6.3 Exceptions to the GIS and GIIS

6.3.1 Exceptions to the GIS

Exceptions to the GIS requirement of Section 4.3.8 that components shall be interchangeable in form, fit, and function by other components of the same part number include node fitting alignment plates that have been match drilled to equipment interfaces.

6.3.2 Exceptions to the GIIS

None Identified.

6.4 Requirements Traceability Matrix

Requirements shown in Section 3 of this specification were derived from the source documents shown in the Requirements Traceability Matrix, Attachment B (provided under separate cover).

(This page intentionally left blank.)

APPENDIX I

10 EOS–AM STRUCTURAL DESIGN CRITERIA

10.1 Scope

This appendix presents the structural design criteria and interpretive information for the structural design of the EOS–AM Spacecraft for TITAN–IV (No Upper Stage) and Atlas–IIAS launches. Information presented herein is intended to be used in the EOS–AM Spacecraft development program to obtain a flightworthy structure (i.e., a minimum weight structure possessing sufficient strength and stiffness to accomplish the Spacecraft mission without jeopardizing mission objectives).

Structural design criteria presented in this appendix concentrate on structural integrity which consists of the strength, stiffness, and structural performance aspects of the design. It is intended to supplement and expand on general structural design requirements specified in the CEI Specification, PS20005396, and the PAR, 420–05–02. It is also intended to assist in the interpretation of these documents.

It is the intent of this document to serve as a guide to structural design by:

a. Defining the basic design philosophy governing the structural design of the Spacecraft for structural integrity objectives.

b. Providing the criteria or standards that define structural integrity.

c. Providing the basic design data necessary to perform the structural design and analysis.

10.2 References

The following documents contain information from which the requirements specified in this appendix were derived.

a. NASA SP–8077, "Transportation and Handling Loads," 9/71.

b. Earth Observing System (EOS) Proposal No. WP3–033 (EOS–001), Restructuring EOS–AM Spacecraft, Volume 1, Technical Proposal, 4/6/90.

c. Upper Atmosphere Research Satellite (UARS) Observatory Environmental Design and Test Specification for Spacecraft Systems, Subsystems, and Components.

d. "Acoustic Environments for DOD Payloads on Shuttle," C. S. Tanner, Aerospace Corporation, Proceedings of the Shuttle Payload Dynamic Environments and Loads Prediction Workshop Volume 1, Held at JPL on 1/24–26/84.

e. "Recommendation of Design Loads for the Space Station Spacecraft Primary Structure, ORU, and PMP," C. Thasanatorn and H. Dhillon, GE ASD, SSP–STR–017, 12/07/89.

f. "Development of Random Vibration Specifications for EOS–AM Spacecraft Payloads/ Instruments," V. Briskin and C. Thasanatorn, GE ASD, MA90–EOSA–004, EOS–STR–033, 05/10/90.

(This page intentionally left blank.)

Proof Factor: A multiplying factor applied to limit load, pressure, or stress to obtain proof test load, pressure or stress.

Design Gross Weight: The maximum Spacecraft weight the SMS will be designed to support.

Detrimental Deformation: Deformations, either elastic or inelastic, resulting from the application of loads and temperatures which prevent any portion of the Spacecraft structure from performing its intended function. Examples include structural deformations, deflections, or displacements which (1) cause unintentional contact, misalignment, or divergence between adjacent components; (2) cause a component to exceed its established dynamic space envelope; (3) reduce the strength or related life of the structure below specified levels; (4) degrade the effectiveness of thermal protection coatings or shields; (5) jeopardize the proper functioning of equipment.

Fixed Base Frequency: Resonant frequencies of the subsystems or components when rigidly supported at the mounting interface degrees of freedom.

Failure: Rupture, collapse, seizure, excessive wear, or any other phenomenon resulting in an inability to sustain design loads, pressures, stresses or environments without detrimental deformation.

Model Uncertainty Factor (MUF): A factor applied to calculated loads (e.g., load cycle results) to obtain limit loads. This factor accounts for the maturity of the design and uncertainties in assumptions, analysis methods, and mathematical models used to derive loads.

Pressure Vessel: A component of a pressurized system designed primarily as a container to carry fluids or gases at sustained internal pressure, but which may also carry some Spacecraft loads, and:

a. Contains stored energy of 14,240 ft–lbs or greater based on adiabatic expansion of a perfect gas; or

b. Contains a gas or liquid which will create a mishap (accident) if released; or

c. Will experience a design limit pressure of greater than 100 psi.

Stress Corrosion Cracking: The combined action of sustained tensile stress and corrosion to cause premature material failure.

Structure: All components and assemblies designed to sustain loads or pressures, provide stiffness and stability, or provide support or containment.

10.3.2 Loads

Applied Load: The product of the limit load and a factor of safety. The result is either the ultimate load, the yield load, or the proof load.

Limit Load: The maximum anticipated load on a structure resulting from an expected operating environment.

Ultimate Load: The product of the limit load and the ultimate factor of safety.

Yield Load: The product of the limit load and the yield factor of safety.

Allowable Load: The maximum load that can be permitted in a structure for a given design condition.

Proof Load: The product of the limit load and the proof factor of safety. No other factors of safety shall be used to determine the proof load level. For proof test load conditions, limit load shall be from coupled loads analysis results available at time of proof testing. Proof level is equivalent to protoflight/qualification level.

Load Factor: The ratio of the vector sum of the external forces acting on a mass to the weight of mass.

Quasi–static Load Factor: Maximum expected flight load factors expressed in gravity units (g for translation and g/inch or rad/sec^2 for angular acceleration). Combinations of quasi–static load factors are used to generate static loads in the Spacecraft structure equivalent to the worst case of combined effects due to rigid body and elastic accelerations.

10.3.3 Pressure

Limit Pressure: The maximum differential pressure that can be anticipated to occur while the Spacecraft is in service in the expected operating environments. Limit pressures include combinations of such pressures as maximum operating pressure, transient pressure, and head pressure.

Maximum Allowable Working Pressure (MAWP): The maximum pressure at which a component can continuously operate based on allowable stress values and functional capabilities. MAWP is synonymous with Maximum Design Operating Pressure (MDOP) or "rated pressure".

Maximum Expected Operating Pressure (MEOP): The maximum pressure at which the system or component actually operates in a particular application. MEOP includes the effects of temperature, transient peaks, vehicle acceleration, and relief valve tolerances. MEOP is synonymous with Maximum Operating Pressure (MOP).

Proof Pressure: The proof pressure is the test pressure that pressurized components shall sustain without detrimental deformation. The proof pressure is used to give evidence of satisfactory workmanship and material quality, and/or establish maximum initial flaw sizes (for fracture mechanics). It is equal to the product of MEOP, proof factor, and a factor accounting for the difference in material properties between test and design temperatures.

Ultimate Pressure: The product of the MEOP and the ultimate pressure factor (Burst factor). It is the maximum pressure which the structure must withstand without rupture in the expected operating environment.

Design Burst Pressure: The design burst pressure is a test pressure that pressurized components must withstand without rupture to demonstrate design adequacy in a qualification test. It is equal to the product of the MEOP, burst factor, and a factor to account for the difference in material properties between test and design temperatures.

10.3.4 Strength

Material Strength: Corresponds to the stress level that the material is capable of withstanding in the local structural orientation in the expected operating environments. Units are expressed in force per unit area (original unloaded cross–sectional area).

Yield Strength: Corresponds to the maximum load or stress in a structure or material at which permanent deformation occurs.

Ultimate Strength: Corresponds to the maximum load or stress that a structure or material can withstand without incurring rupture or collapse.

10.3.5 Stress

Allowable Stress: The maximum stress that can be permitted in a material for a given design condition.

Applied Stress: The structural stress induced by the applied load and environment. This includes the appropriate factors of safety.

Residual Stress: A stress that remains in a structure after processing, fabrication, assembly, or testing.

Thermal Stress: The structural stress arising from temperature gradients and differential thermal expansion in or between structural components, assemblies, or systems.

10.3.6 Composites

Lamina (or Ply): A single layer of unidirectional fibers in a matrix.

Laminate: A stack of laminae with various orientations of principal material directions in the laminae. The layers of a laminate are bound together by the same matrix material that is used in the lamina.

Laminate Analysis: A process by which the laminate constitutive relation, including average elastic constants, is derived from the constitutive relation for each layer in the laminate. The laminate relation is used to determine laminate midplane strains and curvatures arising from applied in–plane stress and moment resultants. The midplane strains and curvatures are then used to determine the resulting strains and stresses in each lamina.

Hart–Smith Bonded Joint Analysis: Analysis techniques used to characterize the strength of adhesive–bonded joints with metal and/or composite adherends.

B–Basis Allowable: A material allowable developed with empirical data per MIL–HDBK–5E procedures which provides a 95% confidence level with 90% probability.

Tension and Compression Moduli: Material modulus of elasticity measured when the specimen is loaded in tension and compression, respectively.

Yield Load: The product of the limit load and the yield factor of safety.

Allowable Load: The maximum load that can be permitted in a structure for a given design condition.

Proof Load: The product of the limit load and the proof factor of safety. No other factors of safety shall be used to determine the proof load level. For proof test load conditions, limit load shall be from coupled loads analysis results available at time of proof testing. Proof level is equivalent to protoflight/qualification level.

Load Factor: The ratio of the vector sum of the external forces acting on a mass to the weight of mass.

Quasi–static Load Factor: Maximum expected flight load factors expressed in gravity units (g for translation and g/inch or rad/sec^2 for angular acceleration). Combinations of quasi–static load factors are used to generate static loads in the Spacecraft structure equivalent to the worst case of combined effects due to rigid body and elastic accelerations.

10.3.3 Pressure

Limit Pressure: The maximum differential pressure that can be anticipated to occur while the Spacecraft is in service in the expected operating environments. Limit pressures include combinations of such pressures as maximum operating pressure, transient pressure, and head pressure.

Maximum Allowable Working Pressure (MAWP): The maximum pressure at which a component can continuously operate based on allowable stress values and functional capabilities. MAWP is synonymous with Maximum Design Operating Pressure (MDOP) or "rated pressure".

Maximum Expected Operating Pressure (MEOP): The maximum pressure at which the system or component actually operates in a particular application. MEOP includes the effects of temperature, transient peaks, vehicle acceleration, and relief valve tolerances. MEOP is synonymous with Maximum Operating Pressure (MOP).

Proof Pressure: The proof pressure is the test pressure that pressurized components shall sustain without detrimental deformation. The proof pressure is used to give evidence of satisfactory workmanship and material quality, and/or establish maximum initial flaw sizes (for fracture mechanics). It is equal to the product of MEOP, proof factor, and a factor accounting for the difference in material properties between test and design temperatures.

Ultimate Pressure: The product of the MEOP and the ultimate pressure factor (Burst factor). It is the maximum pressure which the structure must withstand without rupture in the expected operating environment.

Design Burst Pressure: The design burst pressure is a test pressure that pressurized components must withstand without rupture to demonstrate design adequacy in a qualification test. It is equal to the product of the MEOP, burst factor, and a factor to account for the difference in material properties between test and design temperatures.

10.4.2 General Design Criteria

10.4.2.1 Stiffness Requirements

When subjected to design yield loads, the structure or any component thereof shall not experience detrimental distortions. The fulfillment of the strength requirements of Section 10.4.2.2 shall not be deemed sufficient in itself to satisfy this requirement.

Minimum resonant frequency requirements will be used to control the dynamic response of the Spacecraft and components and to preclude dynamic interactions with the LV and Spacecraft GN&CS. These minimum resonant frequencies are specified for the Spacecraft, component/subsystem mounting, and the deployed solar array and HGA. The Spacecraft primary structure shall be designed for inertia loads independent of any potential stiffening effect provided by EM or component installations. EMs and components will be treated as mass items only and their inertial loads applied to the basic Spacecraft structure. However, all structural components will be included in analyses of thermally induced loads. For subassembly analysis, such as for the equipment panels, a conservative estimate of the component stiffening effects will be included.

10.4.2.2 Strength Requirements

10.4.2.2.1 Yield Load

At yield load the structure shall have sufficient strength to withstand simultaneously the yield loads and the other applicable environments of the design condition without experiencing detrimental deformations, a plastic strain of 0.2%, or loss of functional capability.

10.4.2.2.2 Ultimate Load

At ultimate load the structure shall have sufficient strength to withstand simultaneously the ultimate loads and the other applicable environments of the design condition without failure by rupture or instability. No factor of safety is applied to any environment other than loads.

10.4.2.2.3 Proof Load

All structures for which proof loading is required shall withstand the proof loads without failure or detrimental deformations.

10.4.2.2.4 Design Factors of Safety

Design factors of safety shall be used to account for uncertainties in design which cannot be analyzed or otherwise accounted for in a rational manner. General design factors shall be applied to limit loads and pressures and to the stresses arising from temperature differences and gradients, but not to the temperatures and temperature differences.

The design factors of safety shown in Table IV shall be used to obtain the structural design yield and design ultimate loads. Structure that is to be proof–tested (protoflight/qualification level testing) shall be analyzed using the "Test" factors of safety. Structure that will not be proof–tested shall be

Table IV. Design Factors of Safety

Load Condition	Design Factors of Safety	
	Yield	Ultimate
General – "Test" Launch and Orbital (Limit Level)	1.25	1.40
General – "No–Test" Launch and Orbital (Limit Level)	2.00	2.60
Transportation and Handling		
Hazardous Conditions	1.25	2.00
Not Hazardous to Personnel	1.25	1.40
Analysis of Qualification/Protoflight Level Test Load Conditions		
Random Vibration	1.15	1.25
Sine Vibration	1.15	1.25
Shock	1.00	1.00

analyzed using the "No–Test" factors of safety. Factors of safety for analysis of test conditions are included in Table IV. These factors of safety are to be applied to loads and stresses resulting from protoflight/qualification level test conditions. The sine test input shall be notched so that the response shall not exceed 1.25 times the loads derived from the FDLC results.

The special factors of safety shown in Table V are used to account for uncertainties in load/stress distributions in fittings and joints and variations in the control of welding and bonding processes. Also, a special factor of safety takes into account the variations in the strength of elements fabricated from composite materials. This factor is to be used for composite materials whose strength allowables have not been established by test. The special factors of safety are applied in addition to the other standard factors of safety.

10.4.2.2.5 Proof Factors

Static proof testing shall be used for Spacecraft primary structure strength verification. The appropriate strength test method shall be used for Spacecraft secondary structure, however, bonded secondary structure (e.g., struts) shall be proof loaded. The proof factor of 1.25 shall be applied to limit loads to determine the proof test loads. As stated previously, for proof load conditions, limit load shall be from coupled loads analysis results available at the time of proof testing.

Table V. Special Design Factors of Safety

Load Condition	Design Factors of Safety	
	Yield	Ultimate
Fittings	1.10	1.15
Welded Joints	1.00	1.50
Bonded Joints	1.00	1.50
Shear Fasteners	1.00	1.15
Tension Fasteners	1.00	1.50
Composite Structure with non–test–verified allowables	—	1.28
Gapping Factor for Releasable Joints	1.25	1.25

10.4.2.3 Margin of Safety

10.4.2.3.1 Design Margin of Safety

The margin of safety shall be determined at allowable ultimate levels and yield levels when appropriate, and at the temperatures expected for all critical flight conditions. Positive margins of safety shall be demonstrated for all structural parts for design yield and design ultimate conditions.

10.4.2.3.2 Proof Test Margin of Safety

Minimum margins of safety calculated for proof load test conditions, when using factors of safety equal to 1.0, shall not be less than 0.15 for yield failure and 0.25 for ultimate failure. However, if the limit load (coupled load results available at the time of test) is such that the above minimum margins of safety are not ensured, the proof factor may be negotiated to a proper level with the customer.

10.4.2.4 External Loads

External loads shall be determined by conservative analysis of the design environment.

10.4.2.5 Dynamic Loads

Dynamic loads shall be determined for all transient phenomena expected in each design environment. A transient loads analysis will be performed using a coupled EOS/Launch Vehicle model. The calculation of all dynamic loads shall include the effects of Spacecraft structural flexibilities and damping.

Table IV. Design Factors of Safety

Load Condition	Design Factors of Safety	
	Yield	Ultimate
General – "Test" Launch and Orbital (Limit Level)	1.25	1.40
General – "No–Test" Launch and Orbital (Limit Level)	2.00	2.60
Transportation and Handling		
Hazardous Conditions	1.25	2.00
Not Hazardous to Personnel	1.25	1.40
Analysis of Qualification/Protoflight Level Test Load Conditions		
Random Vibration	1.15	1.25
Sine Vibration	1.15	1.25
Shock	1.00	1.00

analyzed using the "No–Test" factors of safety. Factors of safety for analysis of test conditions are included in Table IV. These factors of safety are to be applied to loads and stresses resulting from protoflight/qualification level test conditions. The sine test input shall be notched so that the response shall not exceed 1.25 times the loads derived from the FDLC results.

The special factors of safety shown in Table V are used to account for uncertainties in load/stress distributions in fittings and joints and variations in the control of welding and bonding processes. Also, a special factor of safety takes into account the variations in the strength of elements fabricated from composite materials. This factor is to be used for composite materials whose strength allowables have not been established by test. The special factors of safety are applied in addition to the other standard factors of safety.

10.4.2.2.5 Proof Factors

Static proof testing shall be used for Spacecraft primary structure strength verification. The appropriate strength test method shall be used for Spacecraft secondary structure, however, bonded secondary structure (e.g., struts) shall be proof loaded. The proof factor of 1.25 shall be applied to limit loads to determine the proof test loads. As stated previously, for proof load conditions, limit load shall be from coupled loads analysis results available at the time of proof testing.

10.4.2.6.2 On–Orbit Disturbance

On–orbit disturbances that may cause significant structural loads are caused by firing of the thrusters for Spacecraft maneuvers, attitude adjustments, and stationkeeping. The on–orbit acceleration factors are derived from the on–orbit thruster–firing transient analysis. Model uncertainty factors for each analysis cycle are given in Table VII.

Table VII. Model Uncertainty Factors (On–orbit)

Analysis Cycle	Factor
Preliminary Thruster Firing Analysis	1.50
Final Thruster Firing Analysis	1.25

10.5 Design Characteristics

10.5.1 Material Properties

10.5.1.1 Allowable Mechanical Properties

Values for allowable mechanical properties of structure and joints in their design environment shall be taken from approved sources such as MIL–HDBK–5E, MIL–HDBK–17, MIL–HDBK–23A, or the AFML Advanced Composite Design Guide. When values for mechanical properties of materials or joints are not available because they are new or used in a new environment, they shall be determined by approved analytical or test methods. A sufficient number of tests shall be conducted to establish values for the mechanical properties on a statistical basis. The effects of temperature, thermal cycling and gradients shall be accounted for in defining allowable mechanical properties.

10.5.1.2 Structural Component Allowables

Material allowable "A" (Ref MIL–HDBK–5E) values shall be used for all metallic structural components. Allowables for composites developed at Astro Space are discussed in Section 10.7.

10.5.2 Buckling and Crippling

Structural components loaded in compression that are subject to buckling (global instability) or crippling (local instability) shall not fail under ultimate load, nor shall deformation from limit loads degrade the functioning of any system or produce changes in loading that are not accounted for. Maximum crippling stresses are cut off at the material compressive yield strength unless test results are obtained to substantiate the use of higher crippling stresses. Structural panels or webs loaded in shear shall not undergo initial shear buckling at yield load or permanent shear buckling at ultimate load. Effects of load redistribution due to initial shear buckling will be accounted for.

10.5.3 Preload of Deployables

Installation of deployables on the Spacecraft shall provide for sufficient preload at all releasable joints such that the following requirements are met:

1. Where the transfer of shear across the joint is dependent on joint preload, the preload must be sufficient to provide shear transfer at design ultimate load conditions. For the purposes of determination of preload of releasable joints, design ultimate load is defined as limit load times the product of the general ultimate factor of safety and the gapping factor for releasable joints (See Tables IV and V).
2. Where the transfer of shear across the joint is independent of the joint preload, the preload must be sufficient to prevent gapping at design yield load. For the purposes of determination of preload of releasable joints, design yield load is defined as limit load times the product of the general yield factor of safety and the gapping factor for releasable joints (See Tables IV and V).

10.5.4 Structural Non–linearities

The structure shall possess "linearity" to a degree which will allow accurate prediction of its behavior at any time. Important types of non–linearities which should be avoided are adverse non–linearities in energy dissipating mechanisms, mechanical backlash, and, to a certain degree, elastic shear buckling in structural elements.

10.5.5 Alignment

The Spacecraft structure shall be designed to meet component installation mechanical and thermal alignment requirements within established error budget allocations. These requirements shall be met after exposure to launch and orbital environments throughout the Spacecraft orbital life.

Mechanical alignment includes consideration of deflections during launch, orbit maneuver conditions, hysteresis effects, mechanical adjustment uncertainties, and manufacturing assembly tolerances.

Thermal alignment shall include distortion of equipment mounts and local supporting structure due to the thermal environment and overall thermal distortion of the Spacecraft primary structure.

10.5.6 Thermal Effects

Consideration shall be given to thermal effects on the structure including temperatures, temperature gradients, thermal stresses, thermal deformations, and mechanical and physical property changes. Mating of materials with widely varying coefficients of expansion in areas susceptible to large temperature variations shall be avoided. Temperature distributions shall be derived by rational analyses, considering the steady state and transient thermal environments. The structural design shall account for: (1) temperature distributions that vary with time and sun angles; (2) deflections due to short term applied loads and temperatures; and (3) compatibility of strains and deformations induced by differential thermal expansion and contraction of elements of the structure.

10.5.7 Fatigue Considerations

Consideration shall be given in the design of the Spacecraft structure to ensure good fatigue design characteristics. Caution shall be exercised to avoid residual stresses, stress concentrations, and poor surface finishes. Materials utilized shall exhibit satisfactory fatigue characteristics for the expected cyclic loading environment.

In designing for fatigue environments, the allowable stress corresponding to the lower edge of the scatter band of test results shall be used where sufficient data is available. In the event insufficient data is available to define a scatter band, the required number of cycles shall be increased by a factor of 4 and the mean value fatigue curve used.

When multiple fatigue environments exist, the combined effect shall be determined by use of Miner's Rule.

10.5.8 Venting

All structural components shall be adequately vented in order to prevent significant loadings due to the pressure differentials encountered during ascent.

10.5.9 Misalignment and Dimensional Tolerances

The effects of allowable structural misalignments, deflections and other permissible and expected dimensional tolerances shall be included in the analysis of all loads, load distributions, and allowable loads.

10.5.10 Welding

Welded joints shall be in accordance with applicable welding specifications identified in the EOS Program Approved Materials and Processes List, 20008650.

10.5.11 Fasteners

Bolted fasteners shall be of aerospace quality and to the greatest extent be composed of MS, NAS, and AN standard parts. The shanks of all structural bolts in shear shall have no threads in bearing in sheet or fittings equal to or less than 0.093 inch thickness. In thicker sheet or fittings, a maximum of two threads, including thread runout, is permitted in bearing when based on the maximum joint thickness and minimum bolt grip. However, not more than 25 percent of the minimum thickness of the sheet or fitting shall have threads in bearing.

Bolt and screw preloads shall use torque limits recommended for tension applications to obtain tight joints with minimum hysteresis effects.

Design of bolted joints on the Spacecraft primary and/or alignment critical structure shall utilize bearing to transmit shear loads. In addition, these joints shall provide for sufficient bolt preload such that no gapping occurs due to design yield load.

10.5.3 Preload of Deployables

Installation of deployables on the Spacecraft shall provide for sufficient preload at all releasable joints such that the following requirements are met:

1. Where the transfer of shear across the joint is dependent on joint preload, the preload must be sufficient to provide shear transfer at design ultimate load conditions. For the purposes of determination of preload of releasable joints, design ultimate load is defined as limit load times the product of the general ultimate factor of safety and the gapping factor for releasable joints (See Tables IV and V).
2. Where the transfer of shear across the joint is independent of the joint preload, the preload must be sufficient to prevent gapping at design yield load. For the purposes of determination of preload of releasable joints, design yield load is defined as limit load times the product of the general yield factor of safety and the gapping factor for releasable joints (See Tables IV and V).

10.5.4 Structural Non–linearities

The structure shall possess "linearity" to a degree which will allow accurate prediction of its behavior at any time. Important types of non–linearities which should be avoided are adverse non–linearities in energy dissipating mechanisms, mechanical backlash, and, to a certain degree, elastic shear buckling in structural elements.

10.5.5 Alignment

The Spacecraft structure shall be designed to meet component installation mechanical and thermal alignment requirements within established error budget allocations. These requirements shall be met after exposure to launch and orbital environments throughout the Spacecraft orbital life.

Mechanical alignment includes consideration of deflections during launch, orbit maneuver conditions, hysteresis effects, mechanical adjustment uncertainties, and manufacturing assembly tolerances.

Thermal alignment shall include distortion of equipment mounts and local supporting structure due to the thermal environment and overall thermal distortion of the Spacecraft primary structure.

10.5.6 Thermal Effects

Consideration shall be given to thermal effects on the structure including temperatures, temperature gradients, thermal stresses, thermal deformations, and mechanical and physical property changes. Mating of materials with widely varying coefficients of expansion in areas susceptible to large temperature variations shall be avoided. Temperature distributions shall be derived by rational analyses, considering the steady state and transient thermal environments. The structural design shall account for: (1) temperature distributions that vary with time and sun angles; (2) deflections due to short term applied loads and temperatures; and (3) compatibility of strains and deformations induced by differential thermal expansion and contraction of elements of the structure.

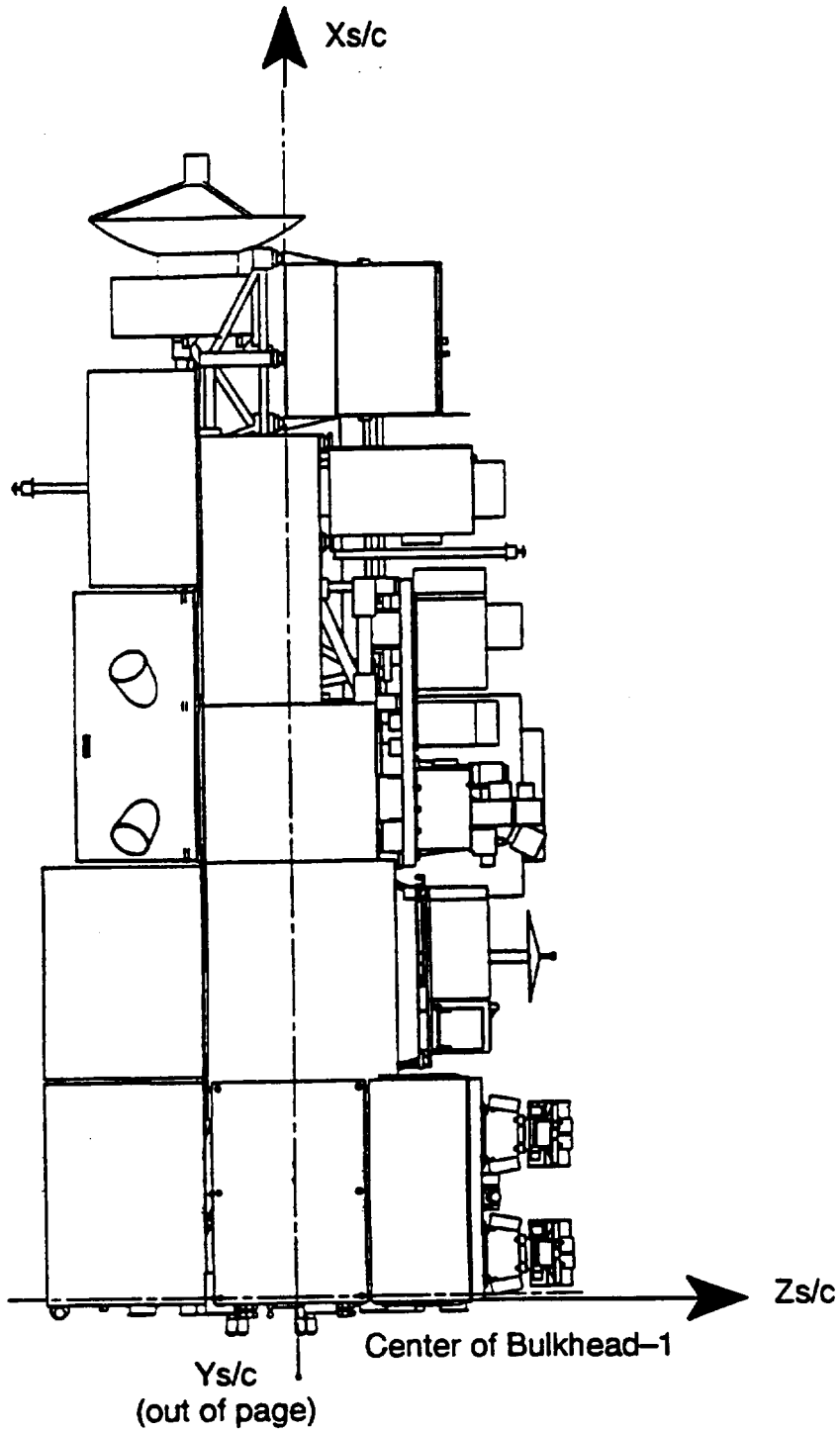

Figure 2. EOS–AM Spacecraft Reference Coordinate System

Classic laminate analysis shall be used to develop preliminary composite elastic properties and material allowables. Hart–Smith adhesive–bonded joint analysis shall be used to develop preliminary bonded joint shear allowables. The average value of the material initial tension and compression moduli shall be used in the calculation of the longitudinal tube modulus. This is a straightforward and accurate means of accounting for equal occurrence probabilities of tension and compression events in the launch vibration spectrum.

Empirical data from the development testing shall be used in conjunction with the preliminary analytical predictions to provide a best estimate of material properties and allowables. Strut material and adhesive–bonded joint allowables shall be calculated using a B–basis per MIL–HDBK–5E. Preliminary strut material properties and allowables, and verification of adhesive bonded joint allowables, will be documented by Engineering as data becomes available.

Any modifications to allowables resulting from verification testing shall be calculated on a B–basis per MIL–HDBK–5E.

All composite struts shall be strength qualified at the strut assembly level via static testing in tension and compression. The strut assembly level consists of the composite tube adhesively bonded to its titanium end/node fittings. The proof load level shall be per Section 10.4.2.2.5.

10.8 Pressurized Systems

Pressurized systems of the EOS–AM Spacecraft shall be designed and tested in accordance with the requirements of MIL–STD–1522A.

All pressure vessels will be designed and tested in accordance with the requirements of the design verification approach A of Section 5 of MIL–STD–1522A. Design verification approaches B and C of Section 5 are unacceptable for EOS–AM Spacecraft flight hardware. Vessels which are determined to be brittle or leak–before–burst (LBB) hazardous as defined by MIL–STD–1522A require fracture control. These vessels will be designed and tested in accordance with the requirements of the safe–life demonstration sub path of approach A (Sections 5.1.2 and 5.2.2 of MIL–STD–1522A).

Pressurized components, including lines, fittings, valves, heat pipes, and other pressure system components or equipment not defined as pressure vessels, shall be designed and analyzed in accordance with the requirements of Section 5.3 of MIL–STD–1522A.

10.9 Design Conditions

10.9.1 General Conditions

All static and dynamic loads and pressures (external and internal) which may affect structural integrity or influence the design shall be defined and accounted for. The effects of thermally and mechanically induced structural deflections, allowable structural misalignments, and structural offsets and dimensional tolerances shall be included in analysis of loads, load distributions, and structural adequacy. Limit loads shall be determined for the Spacecraft in all configurations for the

design conditions identified in this document. Loads shall be distributed throughout the structure by rational analysis which includes the effects of significant structural nonlinearities and temperature. Analysis of dynamic loads shall account for all significant changes in Spacecraft mass properties with time, and all significant structural flexibilities, damping, and load spectra. The analysis shall also account for coupling of the Spacecraft with the LV.

10.9.1.1 Design Gross Weight

The design gross weight for Spacecraft (launch) is defined in Section 3.2.1.

10.9.1.2 Mass Properties

The mass properties and center of gravity requirements shall be compatible with the TITAN–IV(NUS) and Atlas–IIAS requirements. The EOS–AM Spacecraft structural design will be based on the EOS mass properties report, 20001390, which defines the mass properties baseline for development of the EOS–AM Spacecraft structures.

10.9.2 Design Conditions and Environments

This section presents the pre–launch, launch, orbit injection and orbit conditions and environments that are considered most significant to the structural design of the Spacecraft. All loads, or load factors, are "limit" unless otherwise designated.

10.9.2.1 Prelaunch Environments

The structural design shall include consideration of all prelaunch environments to which the structure and its component parts are exposed during manufacture, ground handling, transportation and storage. Except for local areas at handling attachment points, the pre–launch loads shall govern design of the structure to the minimum extent possible.

10.9.2.1.1 Manufacturing

Fabrication and assembly operation effects on the structural design shall be evaluated for (1) material handling, forming, stretching or other processing; (2) misfit and misalignments; (3) welding, bonding and brazing; (4) heat treatment; and (5) checkout and acceptance operations including pressurization cycles.

10.9.2.1.2 Transportation and Ground Handling

The Spacecraft, its subsystems and components shall not suffer any damage when exposed to the transportation and harndling environments described.

10.9.2.1.2.1 Accelerations

Design quasi–steady limit loads for air or ground transportation shall be as specified below. These loads shall be assumed to act separately in each of the three directions.

Longitudinal	±3.5 g (see Reference a.)
Lateral	±2.0 g
Vertical	±3.0 g

Classic laminate analysis shall be used to develop preliminary composite elastic properties and material allowables. Hart–Smith adhesive–bonded joint analysis shall be used to develop preliminary bonded joint shear allowables. The average value of the material initial tension and compression moduli shall be used in the calculation of the longitudinal tube modulus. This is a straightforward and accurate means of accounting for equal occurrence probabilities of tension and compression events in the launch vibration spectrum.

Empirical data from the development testing shall be used in conjunction with the preliminary analytical predictions to provide a best estimate of material properties and allowables. Strut material and adhesive–bonded joint allowables shall be calculated using a B–basis per MIL–HDBK–5E. Preliminary strut material properties and allowables, and verification of adhesive bonded joint allowables, will be documented by Engineering as data becomes available.

Any modifications to allowables resulting from verification testing shall be calculated on a B–basis per MIL–HDBK–5E.

All composite struts shall be strength qualified at the strut assembly level via static testing in tension and compression. The strut assembly level consists of the composite tube adhesively bonded to its titanium end/node fittings. The proof load level shall be per Section 10.4.2.2.5.

10.8 Pressurized Systems

Pressurized systems of the EOS–AM Spacecraft shall be designed and tested in accordance with the requirements of MIL–STD–1522A.

All pressure vessels will be designed and tested in accordance with the requirements of the design verification approach A of Section 5 of MIL–STD–1522A. Design verification approaches B and C of Section 5 are unacceptable for EOS–AM Spacecraft flight hardware. Vessels which are determined to be brittle or leak–before–burst (LBB) hazardous as defined by MIL–STD–1522A require fracture control. These vessels will be designed and tested in accordance with the requirements of the safe–life demonstration sub path of approach A (Sections 5.1.2 and 5.2.2 of MIL–STD–1522A).

Pressurized components, including lines, fittings, valves, heat pipes, and other pressure system components or equipment not defined as pressure vessels, shall be designed and analyzed in accordance with the requirements of Section 5.3 of MIL–STD–1522A.

10.9 Design Conditions

10.9.1 General Conditions

All static and dynamic loads and pressures (external and internal) which may affect structural integrity or influence the design shall be defined and accounted for. The effects of thermally and mechanically induced structural deflections, allowable structural misalignments, and structural offsets and dimensional tolerances shall be included in analysis of loads, load distributions, and structural adequacy. Limit loads shall be determined for the Spacecraft in all configurations for the

meet the TITAN–IV and Atlas–IIAS recommended minimum frequencies and avoidance zones as specified in Table VIII. The resonant frequency design goals for the Spacecraft have been imposed to limit dynamic interaction with the LV and to control Spacecraft deflections during launch.

Table VIII. Minimum Resonant Frequency Goals for Primary Structure

Minimum Frequency, Hz	
ATLAS–IIAS/TITAN–IV(NUS) Configuration	
Minimum Frequency Requirement (TITAN–IV)	2.5 (Lateral)
Minimum Frequency Design Goal	
– Lateral (Atlas–IIAS)	10.0
– Axial (Thrust) (TITAN–IV)	25.0
Note: Fixed base at the Spacecraft separation plane.	

In order to effectively meet the stiffness requirements and goals, special efforts shall be made to keep the local flexibilities in the primary structure to a minimum. The local flexibilities, which are difficult to assess in a dynamic analysis, are usually the cause for a reduction in natural frequencies from analysis to test. At local interfaces, close fit holes and fasteners and minimum eccentricities, as well as stiff local load paths through the primary structure, must be provided.

10.9.2.3 Secondary Structure/Subsystem/Component Stiffness Criteria

Secondary structure is the structure which constitutes and locally supports the various instruments, components, or subsystems. It includes the PM structure, EMs, IMPs, CPHTS radiator panels, S/A, HGA, and direct–mounted instrument (e.g., MODIS, TIR, SWIR, MOPITT) support structures. In general, secondary structure does not lie in the primary load path.

10.9.2.3.1 Resonant Frequencies

Individual components and subassemblies that are mounted to secondary support structure shall be designed to meet the minimum frequency design goals shown in Table IX.

These secondary structure component fixed–base resonant frequency requirements are included so that a generally stiff Spacecraft with predictable loads can be obtained. In addition, they preclude possible clearance problems between components or between components and the Spacecraft structure.

Table IX. Minimum Resonant Frequencies for Subsystem, Component, and Secondary Structures (see Note 1)

Component or Subsystem	Frequency, Hz
1) Equipment Module (EM)	
Group 1: Power, Recorder, Battery and DAS Panels	35
Group 2: GN&C Sensor, COMM/C&DH	40
Group 3: RWA	50
2) Instrument Mounting Plate (IMP)	35
3) Stowed Solar Array (SA)	35
4) High Gain Antenna (HGA) (See Note 2)	45
5) CPHTS Radiator Panels	50
6) Propulsion Module (PM) (lateral)	35
(thrust)	40
7) Other Box Components (Weight <200 Lbs)	100
8) Other Box Components (Weight >200 Lbs)	80

Note: 1) Rigidly supported at the interface points to the Spacecraft primary structure except box components defined in (7) and (8) where the interface points are defined at the box component mounting points.

2) Rigidly supported at the I/F points between the HGA electronic box and the release assembly with a non–flight cage on the gimbal.

For most small components, a 100 Hz minimum fixed–base resonant frequency has been set to ensure adequate separation between the component resonances and the fundamental Spacecraft modes. This allows design and testing of the components and mounting brackets to vibration levels that are essentially independent of the fundamental Spacecraft resonances.

It should be noted that the maintenance of specific minimum frequencies identified in Table IX for component mountings is a design goal and not a requirement. However, if these goals are not met, a listing of those exceptions will be identified. Although it is generally recognized that it is good practice to achieve these minimum frequencies, the design of these components, component installations on EOS should be reviewed from a standpoint of strength, and if significant weight savings can be realized using a strength requirement rather than a stiffness requirement, these weight savings should be identified to the Spacecraft Mechanical Systems Engineer. The design

modifications required to obtain these savings must also be reviewed by EOS Dynamics Engineering in order to assure no adverse overall Spacecraft interactions. Subassemblies having resonances below 80 Hz shall be included in subsequent load cycle analyses.

For components/subsystems with heavy masses, minimum resonant frequencies are established for each individual component/subsystem. Although the minimum frequencies are specified as a design goal, adherence to these frequencies is strongly recommended. The minimum frequency specifications allow design of the components/subsystems and secondary structures to proceed independently from the Spacecraft. The minimum frequency criteria contained in Table IX have been used to establish design loads for the components and subsystems. For components or subsystems in which compliance with the specified minimum frequencies would result in a heavy weight penalty, the design of these components should be reviewed from a strength standpoint. The non–compliance of the frequency design goals will require additional assessment of dynamic interactions as well as dynamic design loads by and must be assessed on a case–by–case basis.

10.9.2.3.2 Deployed Appendage Stiffness And Frequencies

The minimum resonant frequency requirements for the deployed appendages have been imposed to limit SMS/GN&CS interaction during orbital flight. The deployed appendages shall be designed to meet the design requirements specified in Table X. The appendage cantilevered frequencies are sufficiently high to preclude SMS/GN&CS interaction, but are sufficiently low to attenuate orbital excitation due to instrument scanning or slewing. The frequency ranges for the deployed SA and HGA have been defined to meet the GN&C requirements.

Table X. Minimum Fixed Base Resonant Frequency Requirements for Deployed Appendages (Orbital Cantilevered Frequencies)

Component	Frequency, Hz(1)
Solar Array(2)	0.12 (Torsion) 0.19 (Bending)
High Gain Antenna (HGA)(3)	0.50

Note: (1) Specified by GN&CS
(2) Fixed base at the interface points to the spacecraft primary truss structure.
(3) Fixed base at the hinge interface points to the hinge mounting structure.

Table IX. Minimum Resonant Frequencies for Subsystem, Component, and Secondary Structures (see Note 1)

Component or Subsystem	Frequency, Hz
1) Equipment Module (EM)	
Group 1: Power, Recorder, Battery and DAS Panels	35
Group 2: GN&C Sensor, COMM/C&DH	40
Group 3: RWA	50
2) Instrument Mounting Plate (IMP)	35
3) Stowed Solar Array (SA)	35
4) High Gain Antenna (HGA) (See Note 2)	45
5) CPHTS Radiator Panels	50
6) Propulsion Module (PM) (lateral)	35
(thrust)	40
7) Other Box Components (Weight <200 Lbs)	100
8) Other Box Components (Weight >200 Lbs)	80

Note: 1) Rigidly supported at the interface points to the Spacecraft primary structure except box components defined in (7) and (8) where the interface points are defined at the box component mounting points.

2) Rigidly supported at the I/F points between the HGA electronic box and the release assembly with a non–flight cage on the gimbal.

For most small components, a 100 Hz minimum fixed–base resonant frequency has been set to ensure adequate separation between the component resonances and the fundamental Spacecraft modes. This allows design and testing of the components and mounting brackets to vibration levels that are essentially independent of the fundamental Spacecraft resonances.

It should be noted that the maintenance of specific minimum frequencies identified in Table IX for component mountings is a design goal and not a requirement. However, if these goals are not met, a listing of those exceptions will be identified. Although it is generally recognized that it is good practice to achieve these minimum frequencies, the design of these components, component installations on EOS should be reviewed from a standpoint of strength, and if significant weight savings can be realized using a strength requirement rather than a stiffness requirement, these weight savings should be identified to the Spacecraft Mechanical Systems Engineer. The design

Table XI. (Part A: for TITAN–IV/NUS) Design Quasi–static Limit Load Factors (Gs) For EOS–AM Spacecraft Primary Structure

Design Limit Load Factors For TITAN–IV(NUS)

Flight Event	Spacecraft Axis	Design Load Factors (Flight) Max/Min Values (Gs)
Lift–off	Longitudinal(*)	–0.2/–3.4
	Lateral	±3.5
	Torsion	±0.05/in
Max Air Loads	Longitudinal(*)	–1.0/–3.0
	Lateral	±3.15
	Torsion	±0.05/in
Stage–I Shutdown	Longitudinal(*)	–6.5/+2.5
	Lateral	±2.0
	Torsion	±0.01/in
Stage–II Burnout	Longitudinal(*)	–5.5/+2.5
	Lateral	±1.5
	Torsion	±0.005/in

Note: (*) Negative sign of load factor in longitudinal direction produces compressive force on a cantilevered Spacecraft.

Table XI. (Part B: For Atlas–IIAS) Design Quasi–static Limit Load Factors (Gs) for EOS–AM Spacecraft Primary Structure

Design Limit Load Factors For Atlas–IIAS

Flight Event	Spacecraft Axis	Design Load Factors (Flight) Max/Min Values (Gs)
Launch	Longitudinal(*)	+1.4/–4.0
	Lateral	±2.5
	Torsion	±0.01/in
Flight Winds	Longitudinal(*)	–0.7/–3.7
	Lateral	±1.9
	Torsion	±0.005/in
BECO (Max Axial)	Longitudinal(*)	–6.2/–4.45
	Lateral	±0.63
	Torsion	±0.00/in
BECO/BPJ (Max Lateral)	Longitudinal(*)	–4.0/+0.76
	Lateral	±2.5
	Torsion	±0.01/in
SECO	Longitudinal(*)	–2.6/+0.6
	Lateral	±0.38
	Torsion	±0.00/in
MECO	Longitudinal(*)	–4.75/+0.75
		–3.0/+3.0
	Lateral	±0.63
	Torsion	±0.01/in

Note: (*) Negative sign of load factor in longitudinal direction produces compressive force on a cantilevered Spacecraft.

10.9.2.4.4 Load Application Methodology

For design of the primary structure, two sets of quasi–static accelerations are specified. The two primary structure quasi–static acceleration sets are supplemented by a set of subsystem/secondary structure quasi–static design loads. Full evaluation of the primary structure is accomplished through consideration of the three load sets. The methodologies for applying the three load sets are described below:

Method 1: This method shall be used to apply loads specified in Table XI. The design loads are specified for the longitudinal (thrust axis), lateral, and torsional (angular acceleration about the Spacecraft thrust axis) directions. These loads shall be assumed to act simultaneously. In addition, since the lateral load components can act in any Spacecraft lateral direction, the lateral loads shall be applied a minimum of every 45 degrees.

Method 2: This method shall be used to apply loads specified in Tables XII and XIII. This set of quasi–static acceleration fields specifies the variation of the Spacecraft response accelerations along the Spacecraft longitudinal axis. The quasi–static accelerations are specified along the three Spacecraft axes plus the angular acceleration about the Spacecraft longitudinal axis and shall be applied simultaneously for all load combinations.

Method 3: The local effects of subsystem loads on the primary structure must also be evaluated. The subsystem quasi–static design loads specified in Tables XIV and XV shall be utilized. To assess these local effects, the individual subsystem load sets are to be applied separately, one at a time. The specified subsystem design loads are to be applied only to the mass of the appropriate subsystem.

Sizing of the Spacecraft primary structures shall be performed based on the most critical internal structural load distributions derived from these three load sets.

Table XII. Design Quasi–static Flight Limit Accelerations (Gs) For EOS–AM Spacecraft Primary Structure

Titan–IV(NUS) – Liftoff Event (SRMU & SRM)					
S/C Location	$X_{s/c}$ Station	Quasi–Static Accelerations (Flight Limit)			
		$X_{s/c}$	$Y_{s/c}$	$Z_{s/c}$	$RX_{s/c}$
MODIS Support	256.25	–3.75/0.00	±3.70	±6.60	±0.03
HGA CG	238.18	–6.33/+1.47	+2.94	±7.58	±0.03
MODIS CG	235.91	–6.67/+3.07	±4.23	±4.94	±0.03
BHD–7	231.75	–3.75/0.00	±3.30	±5.85	±0.03
BHD–6	210.50	–3.75/0.00	±2.95	±5.22	±0.03
BHD–5	175.00	–3.75/0.00	±2.37	±4.15	±0.03
BHD–4	146.50	–3.75/0.00	±1.90	±3.30	±0.03

Table XII. Design Quasi–static Flight Limit Accelerations (Gs) For EOS–AM Spacecraft Primary Structure (Continued)

S/C Location	$X_{s/c}$ Station	Quasi–Static Accelerations (Flight Limit)			
		$X_{s/c}$	$Y_{s/c}$	$Z_{s/c}$	$RX_{s/c}$
BHD–3	107.50	–3.75/0.00	±1.90	±3.30	±0.03
BHD–2	51.50	–3.75/0.00	±1.90	±2.45	±0.03
BHD–1	0.00	–3.75/0.00	±1.90	±1.70	±0.03
Sep Plane	–4.10	–3.75/0.00	±1.90	±1.70	±0.03
Note: All four acceleration fields, $X_{s/c}$, $Y_{s/c}$, $Z_{s/c}$, and $RX_{s/c}$, shall be applied simultaneously for all load combinations.					
Titan–IV(NUS) – Max Airloads Event (SRMU & SRM)					
S/C Location	$X_{s/c}$ Station	Quasi–Static Accelerations (Flight Limit)			
		$X_{s/c}$	$Y_{s/c}$	$Z_{s/c}$	$RX_{s/c}$
MODIS Support	256.25	–3.25/0.00	±7.00	±7.00	±0.04
HGA CG	238.18	–4.84/+0.36	±4.29	±5.94	±0.04
MODIS CG	235.91	–5.05/+0.82	±4.51	±5.42	±0.04
BHD–7	231.75	–3.20/0.00	±5.70	±5.70	±0.04
BHD–6	210.50	–3.14/0.00	±4.90	±4.90	±0.04
BHD–5	175.00	–3.11/0.00	±4.00	±4.00	±0.04
BHD–4	146.50	–3.06/0.00	±3.50	±3.50	±0.04
BHD–3	107.50	–3.00/0.00	±3.10	±3.10	±0.04
BHD–2	51.50	–3.00/0.00	±2.60	±2.60	±0.04
BHD–1	0.00	–3.00/0.00	±2.50	±2.50	±0.04
Sep Plane	–4.10	–3.00/0.00	±2.50	±2.50	±0.04
Note: Each of the lateral acceleration fields, i.e., $Y_{s/c}$ and $Z_{s/c}$, shall be applied simultaneously with the thrust component $X_{s/c}$ and torsional component $RX_{s/c}$ for all load combinations.					
Titan–IV(NUS) – Stage–1 Oxygen Depletion Event					
S/C Location	$X_{s/c}$ Station	Quasi–Static Accelerations (Flight Limit)			
		$X_{s/c}$	$Y_{s/c}$	$Z_{s/c}$	$RX_{s/c}$
MODIS Support	256.25	–4.90/+0.78	±1.20	±2.90	±0.01
HGA CG	238.18	–4.76/+0.64	±1.09	±1.98	±0.01
MODIS CG	235.91	–4.99/+2.55	±1.03	±1.66	±0.01
BHD–7	231.75	–4.70/+0.60	±1.10	±2.20	±0.01
BHD–6	210.50	–4.70/+0.40	±1.02	±1.60	±0.01
BHD–5	175.00	–4.70/+0.32	±0.87	±1.31	±0.01

Table XII. Design Quasi–static Flight Limit Accelerations (Gs) For EOS–AM Spacecraft Primary Structure (Continued)

S/C Location	$X_{s/c}$ Station	Quasi–Static Accelerations (Flight Limit)			
		$X_{s/c}$	$Y_{s/c}$	$Z_{s/c}$	$RX_{s/c}$
BHD–4	146.50	–4.70/+0.31	±0.76	±1.07	±0.01
BHD–3	107.50	–4.70/+0.29	±0.60	±0.75	±0.01
BHD–2	51.50	–4.70/+0.24	±0.60	±0.75	±0.01
BHD–1	0.00	–4.70/+0.21	±0.60	±0.75	±0.01
Sep Plane	–4.10	–4.70/+0.21	±0.60	±0.75	±0.01

Note: All four acceleration fields, $X_{s/c}$, $Y_{s/c}$, $Z_{s/c}$ and $RX_{s/c}$, shall be applied simultaneously for all load combinations.

Titan–IV(NUS) – Stage–2 Command Shutdown Event

S/C Location	$X_{s/c}$ Station	Quasi–Static Accelerations (Flight Limit)			
		$X_{s/c}$	$Y_{s/c}$	$Z_{s/c}$	$RX_{s/c}$
MODIS Support	256.25	–4.75/+0.32	±1.90	±2.50	±0.005
HGA CG	238.18	–4.64/+1.47	±1.37	±2.10	±0.005
MODIS CG	235.91	–4.56/+0.87	±1.43	±1.26	±0.005
BHD–7	231.75	–4.75/+0.81	±1.25	±2.10	±0.005
BHD–6	210.50	–4.75/+1.24	±0.70	±1.71	±0.005
BHD–5	175.00	–4.75/+2.00	±0.70	±1.10	±0.005
BHD–4	146.50	–4.75/+0.64	±0.70	±1.10	±0.005
BHD–3	107.50	–4.75/+0.46	±0.70	±1.10	±0.005
BHD–2	51.50	–4.75/+0.96	±0.70	±0.90	±0.005
BHD–1	0.00	–4.75/+0.37	±0.70	±0.70	±0.005
Sep Plane	–4.10	–4.75/+0.37	±0.70	±0.70	±0.005

Note: All four acceleration fields, $X_{s/c}$, $Y_{s/c}$, $Z_{s/c}$ and $RX_{s/c}$, shall be applied simultaneously for all load combinations.

Table XIII. Design Quasi–static Flight Limit Accelerations (Gs) For EOS–AM Spacecraft Primary Structure

Atlas–IIAS – Liftoff Event

S/C Location	$X_{s/c}$ Station	Quasi–Static Accelerations (Flight Limit)			
		$X_{s/c}$	$Y_{s/c}$	$Z_{s/c}$	$RX_{s/c}$
MODIS Support	256.25	–1.70/0.00	±1.40	±1.50	±0.01
HGA CG	238.18	–1.70/0.00	±1.30	±1.35	±0.01
MODIS CG	235.91	–1.75/0.00	±1.30	±1.35	±0.01

Table XIII. Design Quasi–static Flight Limit Accelerations (Gs) For EOS–AM Spacecraft Primary Structure (Continued)

S/C Location	$X_{s/c}$ Station	Quasi–Static Accelerations (Flight Limit)			
		$X_{s/c}$	$Y_{s/c}$	$Z_{s/c}$	$RX_{s/c}$
BHD–7	231.75	–1.70/0.00	±1.25	±1.30	±0.01
BHD–6	210.50	–1.70/0.00	±1.15	±1.10	±0.01
BHD–5	175.00	–1.70/0.00	±0.95	±0.80	±0.01
BHD–4	146.50	–1.70/0.00	±0.95	±0.80	±0.01
BHD–3	107.50	–1.70/0.00	±0.95	±0.80	±0.01
BHD–2	51.50	–1.70/0.00	±0.95	±0.80	±0.01
BHD–1	0.00	–1.70/0.00	±0.95	±0.80	±0.01
Sep Plane	–4.10	–1.70/0.00	±0.95	±0.80	±0.01

Note: All four acceleration fields, $X_{s/c}$, $Y_{s/c}$, $Z_{s/c}$ and $RX_{s/c}$, shall be applied simultaneously for all load combinations.

Atlas–IIAS – Max Airloads Event

S/C Location	$X_{s/c}$ Station	Quasi–Static Accelerations (Flight Limit)			
		$X_{s/c}$	$Y_{s/c}$	$Z_{s/c}$	$RX_{s/c}$
MODIS Support	256.25	–2.45/0.00	±2.00	±2.00	±0.005
HGA CG	238.18	–3.07/0.00	±1.85	±1.85	±0.005
MODIS CG	235.91	–3.36/0.00	±1.80	±1.80	±0.005
BHD–7	231.75	–2.45/0.00	±1.80	±1.80	±0.005
BHD–6	210.50	–2.45/0.00	±1.60	±1.60	±0.005
BHD–5	175.00	–2.40/0.00	±1.25	±1.25	±0.005
BHD–4	146.50	–2.40/0.00	±1.00	±1.00	±0.005
BHD–3	107.50	–2.40/0.00	±1.00	±1.00	±0.005
BHD–2	51.50	–2.40/0.00	±1.00	±1.00	±0.005
BHD–1	0.00	–2.40/0.00	±1.00	±1.00	±0.005
Sep Plane	–4.10	–2.40/0.00	±1.00	±1.00	±0.005

Note: Each of the lateral acceleration fields, i.e., $Y_{s/c}$ and $Z_{s/c}$, shall be applied simultaneously with the thrust component $X_{s/c}$ and torsional component $RX_{s/c}$ for all load combinations.

Atlas–IIAS – Pre–BECO Event

MODIS Support	256.25	–5.85/0.00	±0.10	±0.20	0.00
HGA CG	238.18	–5.82/0.00	±0.10	±0.20	0.00
MODIS CG	235.91	–5.97/0.00	±0.10	±0.20	0.00
BHD–7	231.75	–5.80/0.00	±0.10	±0.20	0.00

Table XIII. Design Quasi-static Flight Limit Accelerations (Gs) For EOS-AM Spacecraft Primary Structure (Continued)

S/C Location	$X_{s/c}$ Station	Quasi-Static Accelerations (Flight Limit)			
		$X_{s/c}$	$Y_{s/c}$	$Z_{s/c}$	$RX_{s/c}$
BHD-6	210.50	-5.80/0.00	±0.10	±0.20	0.00
BHD-5	175.00	-5.80/0.00	±0.10	±0.20	0.00
BHD-4	146.50	-5.80/0.00	±0.10	±0.20	0.00
BHD-3	107.50	-5.80/0.00	±0.10	±0.20	0.00
BHD-2	51.50	-5.80/0.00	±0.10	±0.20	0.00
BHD-1	0.00	-5.80/0.00	±0.10	±0.20	0.00
Sep Plane	-4.10	-5.80/0.00	±0.10	±0.20	0.00
Note: All four acceleration fields, $X_{s/c}$, $Y_{s/c}$, $Z_{s/c}$ and $RX_{s/c}$, shall be applied simultaneously for all load combinations.					
Atlas-IIAS - Post-BECO/BPJ Events					
S/C Location	$X_{s/c}$ Station	Quasi-Static Accelerations (Flight Limit)			
		$X_{s/c}$	$Y_{s/c}$	$Z_{s/c}$	$RX_{s/c}$
MODIS Support	256.25	-3.50/+0.63	±2.10	±5.20	±0.01
HGA CG	238.18	-3.50/+1.65	±1.90	±4.25	±0.01
MODIS CG	235.91	-4.50/+2.60	±1.85	±4.10	±0.01
BHD-7	231.75	-3.50/+0.59	±1.80	±3.90	±0.01
BHD-6	210.50	-3.50/+0.57	±1.55	±2.75	±0.01
BHD-5	175.00	-3.50/+0.68	±1.15	±1.90	±0.01
BHD-4	146.50	-3.50/+0.57	±0.80	±1.65	±0.01
BHD-3	107.50	-3.50/+0.56	±0.80	±1.25	±0.01
BHD-2	51.50	-3.50/+0.70	±0.80	±1.25	±0.01
BHD-1	0.00	-3.50/+0.70	±0.80	±1.25	±0.01
Sep Plane	-4.10	-3.50/+0.70	±0.80	±1.25	±0.01
Note: All four acceleration fields, $X_{s/c}$, $Y_{s/c}$, $Z_{s/c}$ and $RX_{s/c}$, shall be applied simultaneously for all load combinations.					

10.9.2.5 Design Loads For Secondary Structures, Subsystems, and Components

10.9.2.5.1 Secondary Structure

The EOS-AM Spacecraft secondary structures, subsystems, and components shall be designed to survive, with adequate margin, the anticipated handling/transportation, test and launch environments, and the mission orbit environment. The launch environment includes

accelerations(steady–state and transients), random vibrations, and acoustic loads. The test environments generally include strength tests (acceleration), random vibration tests, and acoustic tests. In addition, the spacecraft major assemblies, which include the equipment modules, propulsion module, solar array, and HGA, and the instruments will be subjected to sine sweep vibration testing.

Secondary structure is the structure which constitutes and locally supports the various components or subsystems; it also includes the instrument support links, kinematic mounts, solar array support structure, antenna supports, and other component support brackets.

For sizing, the subsystems, subsystem secondary structures, and subsystem support links shall be designed to the quasi–static accelerations in Tables XIV and XV, as appropriate. The design loads are specified at the CG of the subsystem. Design loads for instruments and their secondary structure supports and brackets can be found in the GIIS, 420–03–02.

Table XIV. Design Quasi–static Flight Limit Accelerations (Gs, G/inch) For EOS–AM Spacecraft Equipment Module Structures

EQUIPMENT MODULES	Quasi–Static Accelerations (Flight Limit)			
	$X_{s/c}$	$Y_{s/c}$	$Z_{s/c}$	$RZ_{s/c}$
Power EM Structure	±10.50	±7.00	±7.00	±0.10
Power EM Panels				
1) +X Panel	±46.50	±7.00	±7.00	
2) –X Panel	±46.50	±7.00	±7.00	
3) +Y Panel	±10.50	±7.00	±7.00	
4) –Y Panel	±10.50	±48.00	±7.00	
5) +Z Panel	±10.50	±7.00	±56.00	
6) –Z Panel	±10.50	±7.00	±9.60	
Recorder EM Structure	±8.50	±7.00	±7.00	±0.02
Recorder EM Panels				
1) +X Panel	±55.5	±7.00	±7.00	
2) –X Panel	±55.5	±7.00	±7.00	
3) +Y Panel	±8.50	±7.00	±7.00	
4) –Y Panel	±8.50	±55.3	±18.50	
5) +Z Panel	±8.50	±7.00	±7.00	
6) –Z Panel	±8.50	±7.00	±7.00	
7) Internal Bulkhead Panel	±65.0	±7.00	±7.00	
COMM/C&DH EM Structure	±7.00	±7.00	±7.00	±0.06
COMM/C&DH EM Panels				

Table XIV. Design Quasi-static Flight Limit Accelerations (Gs, G/inch) For EOS-AM Spacecraft Equipment Module Structures (Continued)

EQUIPMENT MODULES	Quasi-Static Accelerations (Flight Limit)			
	$X_{s/c}$	$Y_{s/c}$	$Z_{s/c}$	$RZ_{s/c}$
1) +X Panel	±48.7	±7.00	±7.00	
2) –X Panel	±48.7	±7.00	±7.00	
3) +Y Panel	±7.00	±9.10	±7.00	
4) –Y Panel	±7.00	±42.30	±7.00	
5) +Z Panel	±7.00	±7.00	±18.90	
6) –Z Panel	±7.00	±7.00	±7.40	
GN&C Shell Structure	±10.00	±9.00	±7.00	±0.20
GN&C Shell Panels				
1) +X Panel	±55.00	±9.00	±7.00	
2) –X Panel	±55.00	±9.00	±7.00	
3) +Y Panel	±6.00	±22.30	±7.00	
4) –Y Panel	±7.50	±51.20	±7.00	
5) +Z Panel				
6) –Z Panel	±10.00	±6.00	±8.30	
GN&C Bench Structure	±7.00	±7.00	±11.50	
	Quasi-Static Accelerations (Flight Limit)			
	$X_{s/c}$	$Y_{s/c}$	$Z_{s/c}$	$RY_{s/c}$
Battery Panel Structure	±7.00	±7.00	±7.00	±0.06
RWA EM Structure	±10.00	±9.00	±7.00	±0.20
RWA EM Panels				
1) +X Panel	±10.00	±5.00	±7.00	
2) –X Panel	±10.00	±5.00	±7.00	
3) +Y Panel	±10.00	±15.80	±7.00	
4) –Y Panel	±10.00	±48.50	±7.00	
5) +Z Panel	±10.00	±5.00	±7.40	
6) –Z Panel	±10.00	±5.00	±49.00	
DAS Panel Structure	±8.00	±14.00	±11.50	±0.03

Note: 1. All acceleration fields shall be applied simultaneously and for all load combinations.

2. Quasi-static accelerations for the equipment module panel shall be applied to each panel separately.

Table XV. Design Quasi-static Flight Limit Accelerations (Gs, G/inch) For Other EOS-AM Spacecraft Major Assemblies

Major Assembly	Quasi-Static Accelerations (Flight Limit)			
	$X_{s/c}$	$Y_{s/c}$	$Z_{s/c}$	$RX_{s/c}$
Solar Array Assembly Structure	±7.0	±8.00	±9.00	
High Gain Antenna Assembly Support Str	17.5 acting in any direction			±0.14
Propulsion Module Tank Assembly	±6.00	±3.00	±3.00	±0.30
Propulsion Module Base Panel	±9.20	±3.00	±3.00	
TIR CPHTS Radiator Panel	±6.00	±25.00	±6.00	
SWIR CPHTS Radiator Panel	±6.00	±25.00	±6.00	
MOPITT CPHTS Radiator Panel	±6.00	±25.00	±6.00	
Direct Mount Instrument Secondary Str	12 acting in any direction			
CERES Instrument Mounting Plate	±10.50	±10.50	±13.50	
VSR Instrument Mounting Plate	±10.50	±10.50	±13.50	

Note: (1) All acceleration fields shall be applied simultaneously and for all load combinations.

For subsystems with large surface areas, vibroacoustic loads due to direct airborne acoustic excitations must be combined with the LV induced transient loads and mechanically-transmitted random vibration loads for structural design.

The design limit loads specified in Tables XIV and XV, except as noted, are intended to encompass the effects of mechanically-transmitted and acoustically-induced random vibration as well as excitations from LV low frequency transients. The load factors, if specified as a single CG load factor value, shall be assumed to act in any direction. For each component/subsystem, this CG load shall be applied in the direction that creates the most severe internal loads in the structure. As a minimum, the single CG load factor value shall be applied as shown in Table XVI.

For the design loads specified in multiple axes, i.e., X, Y, Z, RX, RY, RZ, these loads shall be applied simultaneously with all possible load combinations.

The general loads requirements for the design of other secondary structure are presented as a function of component design weight in Figure 3. These loads shall be assumed to act in any direction. For each component, the quasi-static CG load is applied in the direction that creates the most severe internal loads in the structure. As a minimum, the CG load factor obtained from Figure 3 shall be applied to the structure as outlined in Section 10.9.2.5.1. The design quasi-static accelerations obtained from the mass-acceleration curve are intended to envelop the accelerations expected during launch.

Appropriate design factors of safety (Table IV) and special factors of safety (Table V) shall be included for calculations of the critical margins of safety. The design of the secondary structure will be validated by the coupled loads analyses.

Table XVI. Load Factor Application

Load Case	Direction of Applied Loads (1)		
	X	Y	Z
Load Case 1	±(LF)	0.0	0.0
Load Case 2	0.0	±(LF)	0.0
Load Case 3	0.0	0.0	±(LF)
Load Case 4	±0.58*(LF)	±0.58*(LF)	±0.58*(LF)

Note: (1) Loads are applied simultaneously and for all combinations.
(2) (LF) = a single CG load factor value.

For subassemblies with large surface areas, such as instrument mounting plates and HGA dish, combined vibroacoustic and transient (loads cycle results) loads will be used to verify the design.

10.9.2.6 Thermal Loading

The primary and secondary structure shall be capable of maintaining component and sensor mechanical alignments after exposure to orbital thermal environments. Alignment error budgets to be met are specified in the CEI Specification, PS20005396.

10.9.2.7 Vibroacoustic Loading

The structure shall be designed to withstand vibroacoustic loads caused by the direct acoustic impingement on the structure during launch and ground tests Where appropriate, vibroacoustic loads shall be combined with the transient loads. The vibroacoustic loads are especially important for a panel–like structure with large surface areas and low mass density.

10.9.2.8 Loads Cycle Analysis

To verify the design based on quasi–static accelerations, transient loads analyses will be performed using a coupled EOS/LV math model. Model uncertainty factors shown in Table VI will be applied to the results from each load cycle analysis. The MUF shall be applied only to the dynamic part of the transient response results. For liftoff and maximum airloads cases, the worst case low frequency transient loads will be combined (by root sum squaring) with the vibroacoustic loads caused by airborne acoustic impingements on the Spacecraft structures. These loads will be estimated from either MSC NASTRAN finite element analysis or VAPEPS statistical energy method.

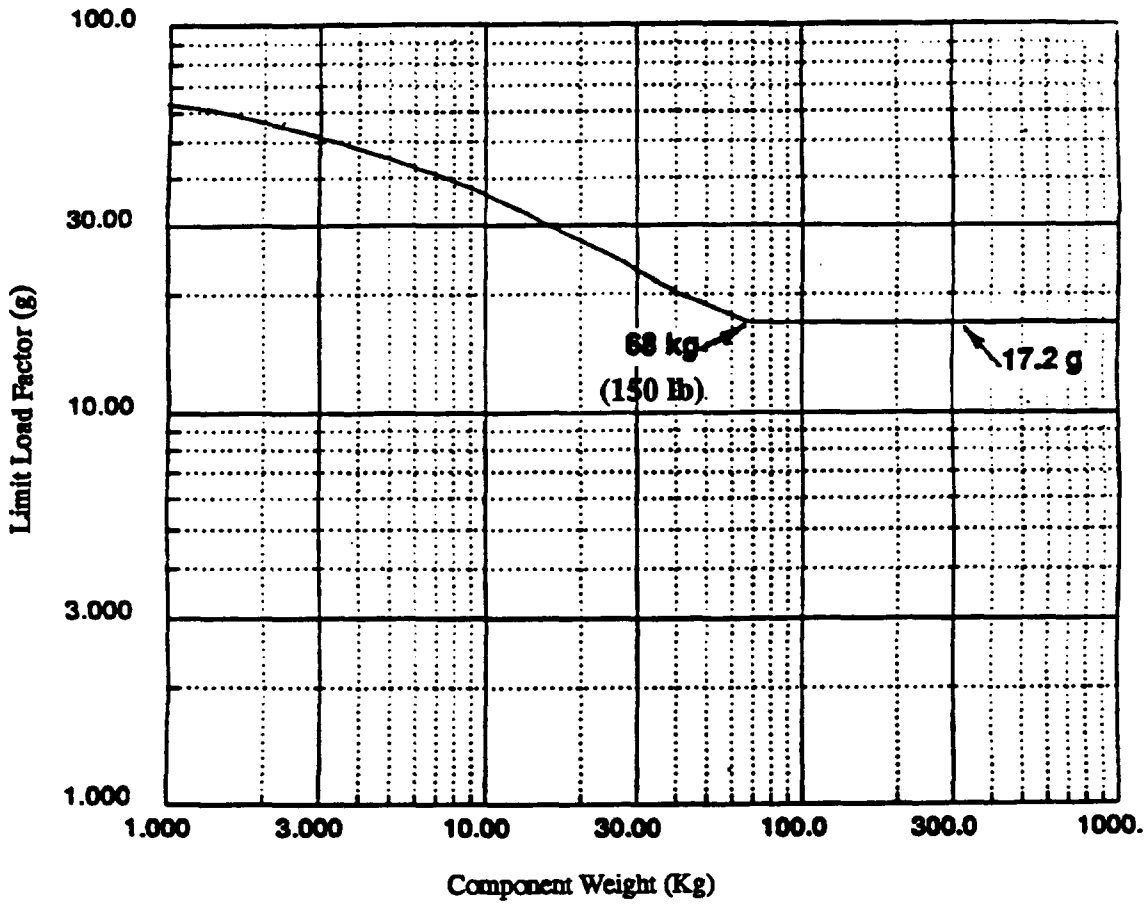

Figure 3. Limit Load Factors for Secondary Structures or Components as a Function of Component Weight (Mass Acceleration Curve)

The instrument finite element models evolve from initial rough approximations to more sophisticated and accurate versions later in the program. Usually the booster–induced loads are determined and verified using design and verification load cycles.

10.9.2.9 Acoustic Environments

The acoustic level specified is an envelope of the acoustic pressure fields expected to occur during liftoff and transonic flight events. The acoustic environments are obtained from the appropriate Launch Vehicle User's Manual.

Qualification/protoflight acoustic noise levels for TITAN–IV/NUS and Atlas–IIAS launches are given in Table XVII. Acceptance test acoustic levels (flight levels) are 3.0 dB lower than the qualification/protoflight levels and are provided in Table XVIII.

Tables XIX and XX provide the envelope levels of the TITAN–IV and Atlas–IIAS acoustic environments for the qualification/protoflight and acceptance levels, respectively.

Table XVII. Qualification/Protoflight Acoustic Noise Level (TITAN–IV/NUS & Atlas–IIAS Launch)

One–Third Octave Center Frequency (Hz)	Noise Level (dB) re: 20 uN/M^2		Test Tolerance (dB)	
	TITAN–IV(NUS)	Atlas–IIAS		
25	——	122.5		
32	132.0	127.0	+3	–6
40	133.5	132.5		
50	134.0	133.0		
63	135.0	133.2	+3	–3
80	135.5	133.6		
100	136.0	133.8		
125	136.0	134.3	+3	–3
160	135.7	135.2		
200	134.9	134.1		
250	134.0	132.5	+3	–3
315	133.2	131.5		
400	131.8	130.8		
500	130.5	129.5	+3	–3
630	129.1	127.0		
800	127.3	123.0		
1000	125.5	119.5	+3	–3
1250	124.0	117.5		
1600	122.0	116.5		
2000	120.5	116.0	+3	–3
2500	119.0	115.0		
3150	117.0	114.5		
4000	115.5	112.5	+3	–6
5000	113.5	111.5		
6300	111.5	111.1		
8000	110.0	112.7	+3	–6
10000	108.0	113.5		
Overall	145.7	144.2	+1	–1

Protoflight Duration: One Minute

Qualification Duration: Two Minutes

Table XVIII. Acceptance (Flight Limit) Acoustic Noise Level (TITAN–IV/NUS & Atlas–IIAS Launch)

One–Third Octave Center Frequency (Hz)	Noise Level (dB) re: 20 uN/M^2		Test Tolerance (dB)	
	TITAN–IV(NUS)	Atlas–IIAS		
25	——	119.5		
32	129.0	124.0	+3	–6
40	130.5	129.5		
50	131.0	130.0		
63	132.0	130.2	+3	–3
80	132.5	130.6		
100	133.0	130.8		
125	133.0	131.3	+3	–3
160	132.7	132.2		
200	131.9	131.1		
250	131.0	129.5	+3	–3
315	130.2	128.5		
400	128.8	127.8		
500	127.5	126.5	+3	–3
630	126.1	124.0		
800	124.3	120.0		
1000	122.5	116.5	+3	–3
1250	121.0	114.5		
1600	119.0	113.5		
2000	117.5	113.0	+3	–3
2500	116.0	112.0		
3150	114.0	111.5		
4000	112.5	109.5	+3	–6
5000	110.5	108.5		
6300	108.5	108.1		
8000	107.0	109.7	+3	–6
10000	105.0	110.5		
Overall	**142.7**	**141.2**	+1	–1

Acceptance Duration: One Minute

Table XIX. Qualification/Protoflight Acoustic Noise Design Envelope Level (TITAN–IV (NUS) and Atlas–IIAS)

One–Third Octave Center Frequency (Hz)	Noise Level (dB) re: 20 uN/M^2	Test Tolerance (dB)	
25	122.5		
32	132.0	+3	–6
40	133.5		
50	134.0		
63	135.0	+3	–3
80	135.5		
100	136.0		
125	136.0	+3	–3
160	135.7		
200	134.9		
250	134.0	+3	–3
315	133.2		
400	131.8		
500	130.5	+3	–3
630	129.1		
800	127.3		
1000	125.5	+3	–3
1250	124.0		
1600	122.0		
2000	120.5	+3	–3
2500	119.0		
3150	117.0		
4000	115.5	+3	–6
5000	113.5		
6300	111.5		
8000	112.7	+3	–6
10000	113.5		
Overall	**145.8**	+1	–1

Protoflight Duration: One Minute

Qualification Duration: Two Minutes

Table XX. Acceptance Acoustic Noise Envelope Level (TITAN–IV (NUS) and Atlas–IIAS)

One–Third Octave Center Frequency (Hz)	Noise Level (dB) re: 20 uN/M^2	Test Tolerance (dB)	
25	119.5		
32	129.0	+3	–6
40	130.5		
50	131.0		
63	132.0	+3	–3
80	132.5		
100	133.0		
125	133.0	+3	–3
160	132.7		
200	131.9		
250	131.0	+3	–3
315	130.2		
400	128.8		
500	127.5	+3	–3
630	126.1		
800	124.3		
1000	122.5	+3	–3
1250	121.0		
1600	119.0		
2000	117.5	+3	–3
2500	116.0		
3150	114.0		
4000	112.5	+3	–6
5000	110.5		
6300	108.5		
8000	109.7	+3	–6
10000	110.5		
Overall	**142.8**	+1	–1

Acceptance Duration: One Minute

10.9.2.10 Random Vibration Environments

10.9.2.10.1 Random Vibration Environments for Instruments

Random vibration environments for instruments are specified in the GIIS, 420–03–02. The random vibration environments were derived using analytical prediction software called VAPEPS in conjunction with the acoustic test results of UARS Spacecraft. The analytical predictions were performed using both theoretical statistical energy analysis prediction scheme and extrapolation prediction scheme using the UARS acoustic test results as a baseline. Derivations of the random vibration specifications can be found in Reference (f.) and S&AI internal documents and presentations.

10.9.2.10.2 Random Vibration Environments for EOS–AM Spacecraft Housekeeping Equipments, Subsystems or Components

Spacecraft housekeeping equipment, subsystems, and components are defined as those required to support the operation of the Spacecraft. They will be collectively called components in the discussion in this subparagraph. Therefore, it includes all of the components other than instrument components. The random vibration specifications were derived based on the Spacecraft PDR configuration and are therefore layout–dependent. These components are separated into five categories:

Category 1: Components mounted directly to the Spacecraft truss structure via brackets.

> Random vibration environments for components mounted directly to the Spacecraft truss structure via brackets are specified in Table XXI for component weights greater than 200 lbs. and in Table XXII for component weights less than 200 lbs.

Category 2: EM components (mounted to the EM panels).

> The random vibration specifications for each of the components mounted on the EM panels are specified in Tables XXV through XXXII. These environments are specified for each of the three component orthogonal axes at the component mounting interfaces to the EM panels. For components mounted to brackets, the environment is specified at the interface between the bracket and the panel.

Category 3: Components mounted to the CPHTS radiator panels

> Random vibration environments for components mounted to the CPHTS radiator panels are specified in Table XXIII.

Category 4: PM components (mounted to the PM structure).

> Random vibration environments for components mounted to the PM structure are specified in Table XXIV.

Category 5: Components mounted to the SAA and secondary structures.

> Random vibration environments for components mounted to the SAA and secondary support structures are specified in Table XXXIII.

Table XXI. Random Vibration Specifications for Housekeeping Components Mounted Directly to the Primary Structure (Weight > 200 Lbs)(TBR–6)

Components	Frequency Range (Hz)	Power Spectral Density (G^2/Hz)	
		Acceptance	Qualification/Protoflight
Housekeeping Components Mounted Directly to the Primary Structure	20 20 – 50 50 – 800 800 – 2000 2000 Overall	0.012 +3 dB/Octave 0.03 –6 dB/Octave 0.012 6.72 G_{RMS}	0.024 +3 dB/Octave 0.06 –3 dB/Octave 0.024 9.50 G_{RMS}

Note: 1) Acceptance/Protoflight Test Duration = 1 minute/axis.
2) Qualification Test Duration = 2 minutes/axis.
3) Random vibration environments are specified at the interface between the primary structure and component brackets for each of the three axes.

The environments are specified for each of the three component orthogonal axes at the component mounting interfaces to the structures.

Table XXII. Random Vibration Specifications for Housekeeping Components Mounted Directly to the Primary Structure (Weight < 200 Lbs)(TBR-7)

Component	Frequency Range (Hz)	Power Spectral Density (G^2/Hz)	
		Acceptance	Qualification/Protoflight
General Random Vibration Specs for Components Mounted on the EM Panels.	20	0.032	0.064
	20 – 50	+3 dB/Octave	+3 dB/Octave
	50 – 800	0.08	0.16
	800 – 2000	–6 dB/Octave	–6 dB/Octave
	2000	0.0128	0.0256
	Overall	10.02 G_{RMS}	14.17 G_{RMS}

Note:
1) Acceptance/Protoflight Test Duration = 1 minute/axis.
2) Qualification Test Duration = 2 minutes/axis.
3) Random vibration environments are specified at the interface between the EM panels and component brackets for each of the three axes.
4) The PSD levels for components weigh less than 50 Lbs shall be according to the levels specified in the table.
5) The PSD levels for components weigh more than 50 Lbs are determined according to

dB reduction =10 LOG(W/50)
PSD (50–800 Hz) = 0.16*(50/W) for qualification/protoflight
PSD (50–800 Hz) = 0.08*(50/W) for acceptance
But shall maintain the level specified in Table XXI as a minimum.

Where W = component weight

Table XXIII. Random Vibration Specifications for Components Mounted to the CPHTS Radiator Panels

Direction	Frequency Range (Hz)	Power Spectral Density (G^2/Hz)	
		Acceptance	Qualification/Protoflight
Each of the 3 Axes	20 20 – 40 40 – 300 300 – 2000 2000 Overall	0.175 +6 dB/Octave 0.70 –9 dB/Octave 0.0024 17.11 G_{RMS}	0.35 +6 dB/Octave 1.40 –9 dB/Octave 4.725E–03 24.20 G_{RMS}

Note: 1) Acceptance/Protoflight Test Duration = 1 minute/axis.
2) Qualification Test Duration = 2 minutes/axis.

Table XXIV. Random Vibration Specifications for Propulsion Module Components

Component	Frequency Range (Hz)	Power Spectral Density (G^2/Hz)	
		Acceptance (Flight)	Qual/Protoflight
Components Mounted on the Propulsion Module Base Plate other than those Specifically Specified in this Table.	20 20 – 50 50 – 800 800 – 2000 2000 Overall	0.06 +3 dB/Octave 0.15 –6 dB/Octave 0.024 13.72 G_{rms}	0.12 +3 dB/Octave 0.30 –6 dB/Octave 0.048 19.41 G_{rms}
1–lbf Rocket Engine Assembly	20 – 1000 1000 – 2000 2000 Overall	0.10 –6 dB/Octave 0.025 12.16 G_{rms}	0.20 –6 dB/Octave 0.05 17.20 G_{rms}
5–lbf Rocket Engine assembly	20 20 – 50 50 – 800 800 – 2000 2000 Overall	0.0128 +6 dB/Octave 0.08 –6 dB/Octave 0.0128 10.00 G_{rms}	0.0256 +6 dB/Octave 0.16 –6 dB/Octave 0.0256 14.13 G_{rms}
3/8" Latch Valve Assembly	20 20 – 50 50 – 200 200 – 390 390–800 800–2000 2000 Overall	0.048 +6 dB/Octave 0.30 –6 dB/Octave 0.08 –6dB/Octave 0.0128 12.28 G_{rms}	0.096 +6 dB/Octave 0.60 –6 dB/Octave 0.16 –6 dB/Octave 0.0256 17.36 G_{rms}

Note:
1) Acceptance/Protoflight Test Duration = 1 minute/axis.
2) Qualification Test Duration = 2 minutes/axis.
3) Random vibration input is specified at the interface points of the assemblies/ components and their mounting structures.

Table XXV. Random Vibration Levels for Components Mounted to Power EM Panels

Component/Assembly	Frequency Range (Hz)	Power Spectral Density (G^2/Hz)	
		Acceptance (Flight)	Qual/Protoflight
Components Mounted on the Equipment Module Panels With Component Mass < 25 Lbs Unless Specified Separately.	20 20 – 50 50 – 800 800 – 2000 2000 Overall	0.06 +3 dB/Octave 0.15 –6 dB/Octave 0.024 13.70 G_{rms}	0.12 +3 dB/Octave 0.30 –6 dB/Octave 0.048 19.37 G_{rms}
PDU (Mass = 84.7 Lbs)	20 20 – 50 50 – 800 800 – 2000 2000 Overall	0.044 +3 dB/Octave 0.11 –6 dB/Octave 0.0176 11.75 G_{rms}	0.088 +3 dB/Octave 0.22 –6 dB/Octave 0.0352 16.63 G_{rms}
BPC (Mass = 19.6 Lbs) (TBR–8)	20 20 – 50 50 – 800 800 – 2000 2000 Overall	0.06 +3 dB/Octave 0.15 –6 dB/Octave 0.024 13.70 G_{rms}	0.12 +3 dB/Octave 0.30 –6 dB/Octave 0.048 19.37 G_{rms}
HCE5	20 20 – 50 50 – 800 800 – 2000 2000 Overall	0.06 +3 dB/Octave 0.15 –6 dB/Octave 0.024 13.70 G_{rms}	0.12 +3 dB/Octave 0.30 –6 dB/Octave 0.048 19.37 G_{rms}

Note:
1) Acceptance/Protoflight Test Duration = 1 minute/axis.
2) Qualification Test Duration = 2 minutes/axis.
3) Random vibration input is specified at the interface points of the assemblies/ components and their mounting structures.

Table XXVI. Random Vibration Levels for Components Mounted to Comm/C&DH EM Panels

Component/Assembly	Frequency Range (Hz)	Power Spectral Density (G^2/Hz)	
		Acceptance (Flight)	Qual/Protoflight
Components Mounted on the Equipment Module Panels With Component Mass < 25 Lbs Unless Specified Separately.	20 20 – 50 50 – 800 800 – 2000 2000 Overall	0.06 +3 dB/Octave 0.15 –6 dB/Octave 0.024 13.70 G_{rms}	0.12 +3 dB/Octave 0.30 –6 dB/Octave 0.048 19.37 G_{rms}
CTIU (Mass = 25.9 Lbs)	20 20 – 50 50 – 800 800 – 2000 2000 Overall	0.032 +3 dB/Octave 0.08 –6 dB/Octave 0.0128 10.02 G_{rms}	0.064 +3 dB/Octave 0.16 –6 dB/Octave 0.0256 14.17 G_{rms}

Note:
1) Acceptance/Protoflight Test Duration = 1 minute/axis.
2) Qualification Test Duration = 2 minutes/axis.
3) Random vibration input is specified at the interface points of the assemblies/ components and their mounting structures.

Table XXVII. Random Vibration Levels for Components Mounted to Recorder EM Panels

Component/Assembly	Frequency Range (Hz)	Power Spectral Density (G^2/Hz)	
		Acceptance (Flight)	Qual/Protoflight
Components Mounted on the Equipment Module Panels With Component Mass < 25 Lbs Unless Specified Separately.	20 20 – 50 50 – 800 800 – 2000 2000 Overall	0.06 +3 dB/Octave 0.15 –6 dB/Octave 0.024 13.70 G_{rms}	0.12 +3 dB/Octave 0.30 –6 dB/Octave 0.048 19.37 G_{rms}
SFE (Mass = 40.0 Lbs)	20 20 – 50 50 – 800 800 – 2000 2000 Overall	0.032 +3 dB/Octave 0.08 –6 dB/Octave 0.0128 10.02 G_{rms}	0.064 +3 dB/Octave 0.16 –6 dB/Octave 0.0256 14.17 G_{rms}
SSR DCU (Mass = 38.5 Lbs)	20 20 – 50 50 – 800 800 – 2000 2000 Overall	0.032 +3 dB/Octave 0.08 –6 dB/Octave 0.0128 10.02 G_{rms}	0.064 +3 dB/Octave 0.16 –6 dB/Octave 0.0256 14.17 G_{rms}
SSR DMU (Mass = 210.0 Lbs)	20 20 – 50 50 – 800 800 – 2000 2000 Overall	0.012 +3 dB/Octave 0.03 –6 dB/Octave 0.0048 6.14 G_{rms}	0.024 +3 dB/Octave 0.06 –6 dB/Octave 0.0096 8.68 G_{rms}

Note:
1) Acceptance/Protoflight Test Duration = 1 minute/axis.
2) Qualification Test Duration = 2 minutes/axis.
3) Random vibration input is specified at the interface points of the assemblies/components and their mounting structures.

Table XXVII. Random Vibration Levels for Components Mounted to Recorder EM Panels (Continued)

Component/Assembly	Frequency Range (Hz)	Power Spectral Density (G^2/Hz)	
		Acceptance (Flight)	Qual/Protoflight
DAS Modulator (Mass = 20.3 Lbs)	20 20 – 50 50 – 800 800 – 2000 2000 Overall	0.04 +3 dB/Octave 0.10 –6 dB/Octave 0.016 11.20 G_{rms}	0.08 +3 dB/Octave 0.20 –6 dB/Octave 0.032 15.84 G_{rms}
KSA Modulator (Mass = 20.3 Lbs)	20 20 – 50 50 – 800 800 – 2000 2000 Overall	0.04 +3 dB/Octave 0.10 –6 dB/Octave 0.016 11.20 G_{rms}	0.08 +3 dB/Octave 0.20 –6 dB/Octave 0.032 15.84 G_{rms}

Note:
1) Acceptance/Protoflight Test Duration = 1 minute/axis.
2) Qualification Test Duration = 2 minutes/axis.
3) Random vibration input is specified at the interface points of the assemblies/ components and their mounting structures.

Table XXVIII. Random Vibration Levels for Components Mounted to GN&C Sensor EM Panels

Component/Assembly	Frequency Range (Hz)	Power Spectral Density (G^2/Hz)	
		Acceptance (Flight)	Qual/Protoflight
Components Mounted on the Equipment Module Panels With Component Mass < 25 Lbs Unless Specified Separately.	20 20 – 50 50 – 800 800 – 2000 2000 Overall	0.06 +3 dB/Octave 0.15 –6 dB/Octave 0.024 13.70 G_{rms}	0.12 +3 dB/Octave 0.30 –6 dB/Octave 0.048 19.37 G_{rms}
Star Tracker (Mass = 21.3 Lbs)	20 20 – 50 50 – 800 800 – 2000 2000 Overall	0.04 +3 dB/Octave 0.10 –6 dB/Octave 0.016 11.20 G_{rms}	0.08 +3 dB/Octave 0.20 –6 dB/Octave 0.032 15.84 G_{rms}
IRU (Mass = 37.5 Lbs)	20 20 – 50 50 – 800 800 – 2000 2000 Overall	0.04 +3 dB/Octave 0.10 –6 dB/Octave 0.016 11.20 G_{rms}	0.08 +3 dB/Octave 0.20 –6 dB/Octave 0.032 15.84 G_{rms}
ACE (Mass = 46.5 Lbs)	20 20 – 50 50 – 800 800 – 2000 2000 Overall	0.04 +3 dB/Octave 0.10 –6 dB/Octave 0.016 11.20 G_{rms}	0.08 +3 dB/Octave 0.20 –6 dB/Octave 0.032 15.84 G_{rms}

Note:
1) Acceptance/Protoflight Test Duration = 1 minute/axis.
2) Qualification Test Duration = 2 minutes/axis.
3) Random vibration input is specified at the interface points of the assemblies/components and their mounting structures.

Table XXIX. Random Vibration Levels for Components Mounted to RWA EM Panels

Component/Assembly	Frequency Range (Hz)	Power Spectral Density (G^2/Hz)	
		Acceptance (Flight)	Qual/Protoflight
Components Mounted on the Equipment Module Panels With Component Mass < 25 Lbs Unless Specified Separately.	20 20 – 50 50 – 800 800 – 2000 2000 Overall	0.06 +3 dB/Octave 0.15 –6 dB/Octave 0.024 13.70 G_{rms}	0.12 +3 dB/Octave 0.30 –6 dB/Octave 0.048 19.37 G_{rms}
RWA (Mass = 31.6 Lbs) **(TBR–9)**	20 20 – 50 50 – 800 800 – 2000 2000 Overall	0.06 +3 dB/Octave 0.15 –6 dB/Octave 0.024 13.70 G_{rms}	0.12 +3 dB/Octave 0.30 –6 dB/Octave 0.048 19.37 G_{rms}

Note:
1) Acceptance/Protoflight Test Duration = 1 minute/axis.
2) Qualification Test Duration = 2 minutes/axis.
3) Random vibration input is specified at the interface points of the assemblies/ components and their mounting structures.

Table XXX. Random Vibration Levels for Components Mounted to Battery Panel

Component/Assembly	Frequency Range (Hz)	Power Spectral Density (G^2/Hz)	
		Acceptance (Flight)	Qual/Protoflight
Components Mounted on the Equipment Module Panels With Component Mass < 5 Lbs Unless Specified Separately.	20 20 – 50 50 – 800 800 – 2000 2000 Overall	0.06 +3 dB/Octave 0.15 –6 dB/Octave 0.024 13.70 G_{rms}	0.12 +3 dB/Octave 0.30 –6 dB/Octave 0.048 19.37 G_{rms}

Note:
1) Acceptance/Protoflight Test Duration = 1 minute/axis.
2) Qualification Test Duration = 2 minutes/axis.
3) Random vibration input is specified at the interface points of the assemblies/ components and their mounting structures.

Table XXXI. Random Vibration Levels for Components Mounted to DAS Panel

Component/Assembly	Frequency Range (Hz)	Power Spectral Density (G^2/Hz)	
		Acceptance (Flight)	Qual/Protoflight
Components Mounted on the Equipment Module Panels except BDU	20 20 – 50 50 – 800 800 – 2000 2000 Overall	0.08 +3 dB/Octave 0.20 –6 dB/Octave 0.032 15.84 G_{rms}	0.16 +3 dB/Octave 0.40 –6 dB/Octave 0.064 22.41 G_{rms}

Note:
1) Acceptance/Protoflight Test Duration = 1 minute/axis.
2) Qualification Test Duration = 2 minutes/axis.
3) Random vibration input is specified at the interface points of the assemblies/ components and their mounting structures.

Table XXXII. Random Vibration Levels for Components Mounted to Several EM Panels

Component/Assembly	Frequency Range (Hz)	Power Spectral Density (G^2/Hz)	
		Acceptance (Flight)	Qual/Protoflight
BDU (Mass = 20.8 Lbs) (TBR–10)	20 20 – 50 50 – 800 800 – 2000 2000 Overall	0.08 +3 dB/Octave 0.20 –6 dB/Octave 0.032 15.84 G_{rms}	0.16 +3 dB/Octave 0.40 –6 dB/Octave 0.064 22.41 G_{rms}
FDB (Mass = 1.7 Lbs) (TBR–11)	20 20 – 50 50 – 800 800 – 2000 2000 Overall	0.06 +3 dB/Octave 0.15 –6 dB/Octave 0.024 13.70 G_{rms}	0.12 +3 dB/Octave 0.30 –6 dB/Octave 0.048 19.37 G_{rms}
Torque Rod (TBR–12)	20 20 – 50 50 – 800 800 – 2000 2000 Overall	0.08 +3 dB/Octave 0.20 –6 dB/Octave 0.032 15.84 G_{rms}	0.16 +3 dB/Octave 0.40 –6 dB/Octave 0.064 22.41 G_{rms}
HCE2 (TBR–13)	20 20 – 50 50 – 800 800 – 2000 2000 Overall	0.08 +3 dB/Octave 0.20 –6 dB/Octave 0.032 15.84 G_{rms}	0.16 +3 dB/Octave 0.40 –6 dB/Octave 0.064 22.41 G_{rms}

Note:
1) Acceptance/Protoflight Test Duration = 1 minute/axis.
2) Qualification Test Duration = 2 minutes/axis.
3) Random vibration input is specified at the interface points of the assemblies/components and their mounting structures.

Table XXXIII. Random Vibration Levels for Components Mounted to SAA and Secondary Support Structures

Component/Assembly	Frequency Range (Hz)	Power Spectral Density (G^2/Hz)	
		Acceptance (Flight)	Qual/Protoflight
Components Mounted to the Solar Array Assembly and Secondary Support Structures With Component Mass < 25 Lbs Unless Specified Separately.	20 20 – 50 50 – 800 800 – 2000 2000 Overall	0.06 +3 dB/Octave 0.15 –6 dB/Octave 0.024 13.70 G_{rms}	0.12 +3 dB/Octave 0.30 –6 dB/Octave 0.048 19.37 G_{rms}
SAD (Mass = 79.0 Lbs)	20 20 – 50 50 – 800 800 – 2000 2000 Overall	0.032 +3 dB/Octave 0.08 –6 dB/Octave 0.0128 10.02 G_{rms}	0.064 +3 dB/Octave 0.16 –6 dB/Octave 0.0256 14.17 G_{rms}
SSU (Mass = 83.8 Lbs) (TBR–14)	20 20 – 50 50 – 800 800 – 2000 2000 Overall	0.04 +3 dB/Octave 0.10 –6 dB/Octave 0.016 11.20 G_{rms}	0.08 +3 dB/Octave 0.20 –6 dB/Octave 0.032 15.84 G_{rms}
CSS (TBR–15)	20 20 – 50 50 – 800 800 – 2000 2000 Overall	0.06 +3 dB/Octave 0.15 –6 dB/Octave 0.024 13.70 G_{rms}	0.12 +3 dB/Octave 0.30 –6 dB/Octave 0.048 19.37 G_{rms}

Note:
1) Acceptance/Protoflight Test Duration = 1 minute/axis.
2) Qualification Test Duration = 2 minutes/axis.
3) Random vibration input is specified at the interface points of the assemblies/ components and their mounting structures.

10.9.2.11 Sine Vibration Test Environment

The sine vibration test environment for the EOS–AM Spacecraft major assemblies is specified in the following subsection. The following notes apply to the environments:

1. Acceptance levels depict maximum expected flight levels.
2. Qualification levels depict 1.25 times maximum expected flight levels and apply to both protoflight and prototype (nonflight) hardware.
3. Test axes are in spacecraft coordinate axes.
4. It is acceptable to use one–Hertz–wide acceleration ramps for changing test "g" levels at test acceleration profile steps, provided the plateau frequency bandwidths depicted above are maintained.
5. Sweep rate for acceptance and protoflight hardware is 4 octaves/minute; sweep rate for prototype (nonflight) hardware is 2 octaves/minute.
6. Equipment mounting to the vibration test fixture shall be similar to the installation to the flight spacecraft, including any interface thermal washers, kinematic mounts or other mounting hardware. All mounting fasteners, preloads and locking features shall be similar to the flight installation. Test input levels shall be applied at the spacecraft side of the kinematic mounts, i.e., the interface between the kinematic mounts and spacecraft primary structure.
7. If required, the vibration test levels shall be notched so as not to exceed 1.25 times the final design loads cycle results, as determined by low–level sweep prior to the protoflight level test in each axis.

Spacecraft housekeeping equipment is defined as those required to support the operation of the Spacecraft. The sine vibration test environments are specified for Spacecraft housekeeping equipment major assemblies, i.e., equipment modules, propulsion module, solar array, and HGA, and are provided in Tables XXXIV through XLIV.

Table XXXIV. Sinusoidual Sweep Vibration Test Levels for the Propulsion Module

Spacecraft X (Thrust) Axis		Spacecraft X (Thrust) Axis	
Frequency (Hz)	**Protoflight Level (G's)**	**Frequency (Hz)**	**Acceptance Level (G's)**
5 to 7	0.5 in D.A.	5 to 6	0.5 in D.A.
7 to 12	1.2	6 to 12	0.96
12 to 50	0.7	12 to 50	0.56
Spacecraft Y and Z (Lateral) Axes		**Spacecraft Y and Z (Lateral) Axes**	
Frequency (Hz)	**Protoflight Level (G's)**	**Frequency (Hz)**	**Acceptance Level (G's)**
5 to 6	0.5 in D.A.	5 to 6	0.5 in D.A.
6 to 50	1	6 to 50	0.8

Table XXXV. Sinusoidal Sweep Vibration Test Levels for the High Gain Antenna

Spacecraft X (Thrust Axis)		Spacecraft X (Thrust Axis)	
Frequency (Hz)	Protoflight Level (G's)	Frequency (Hz)	Acceptance Level (G's)
5 to 8 8 to 50	0.5 in D.A. 1.5	5 to 7 7 to 50	0.5 in D.A. 1.2
Spacecraft Y and Z (Lateral) Axes		**Spacecraft Y and Z (Lateral) Axes**	
Frequency (Hz)	Protoflight Level (G's)	Frequency (Hz)	Acceptance Level (G's)
5 to 11 11 to 50	0.5 in D.A. 3.3	5 to 10 10 to 50	0.5 in D.A. 2.64

Table XXXVI. Sinusoidal Sweep Vibration Test Levels for the Solar Array Assembly

Spacecraft X (Thrust) Axis		Spacecraft X (Thrust) Axis	
Frequency (Hz)	Protoflight Level (G's)	Frequency (Hz)	Acceptance Level (G's)
5 to 7 7 to 50	0.5 in D.A. 1.2	5 to 6 6 to 50	0.5 in D.A. 0.96
Spacecraft Y and Z (Lateral) Axes		**Spacecraft Y and Z (Lateral) Axes**	
Frequency (Hz)	Protoflight Level (G's)	Frequency (Hz)	Acceptance Level (G's)
5 to 9 9 to 50	0.5 in D.A. 2.0	5 to 8 8 to 50	0.5 in D.A. 1.6

Table XXXVII. Sinusoidal Sweep Vibration Test Levels for the Solar Array Drive

Spacecraft X (Thrust) Axis		Spacecraft X (Thrust) Axis	
Frequency (Hz)	Protoflight Level (G's)	Frequency (Hz)	Acceptance Level (G's)
5 to 7 7 to 50	0.5 in D.A. 1.2	5 to 6 6 to 50	0.5 in D.A. 0.96
Spacecraft Y and Z (Lateral) Axes		**Spacecraft Y and Z (Lateral) Axes**	
Frequency (Hz)	Protoflight Level (G's)	Frequency (Hz)	Acceptance Level (G's)
5 to 7 7 to 50	0.5 in D.A. 1.5	5 to 7 7 to 50	0.5 in D.A. 1.2

Table XXXVIII. Sinusoidual Sweep Vibration Test Levels for the Power EM

Spacecraft X (Thrust) Axis		Spacecraft X (Thrust) Axis	
Frequency (Hz)	**Protoflight Level (G's)**	**Frequency (Hz)**	**Acceptance Level (G's)**
5 to 7	0.5 in D.A.	5 to 6	0.5 in D.A.
7 to 50	1.1	6 to 50	0.88
Spacecraft Y and Z (Lateral) Axes		**Spacecraft Y and Z (Lateral) Axes**	
Frequency (Hz)	**Protoflight Level (G's)**	**Frequency (Hz)**	**Acceptance Level (G's)**
3 to 6	0.5 in D.A.	3 to 5	0.5 in D.A.
6 to 50	0.9	5 to 50	0.72

Table XXXIX. Sinusoidual Sweep Vibration Test Levels for the Comm/C&DH EM

Spacecraft X (Thrust) Axis		Spacecraft X (Thrust) Axis	
Frequency (Hz)	**Protoflight Level (G's)**	**Frequency (Hz)**	**Acceptance Level (G's)**
5 to 7	0.5 in D.A.	5 to 6	0.5 in D.A.
7 to 22	1.2	6 to 22	0.96
22 to 50	0.8	22 to 50	0.64
Spacecraft Y and Z (Lateral) Axes		**Spacecraft Y and Z (Lateral) Axes**	
Frequency (Hz)	**Protoflight Level (G's)**	**Frequency (Hz)**	**Acceptance Level (G's)**
5 to 10	0.5 in D.A.	5 to 9	0.5 in D.A.
10 to 45	2.7	9 to 45	2.16
45 to 50	0.5	45 to 50	0.40

Table XL. Sinusoidual Sweep Vibration Test Levels for the Recorder Equipment Module

Spacecraft X (Thrust) Axis		Spacecraft X (Thrust) Axis	
Frequency (Hz)	Protoflight Level (G's)	Frequency (Hz)	Acceptance Level (G's)
5 to 7	0.5 in D.A.	5 to 6	0.5 in D.A.
7 to 22	1.2	6 to 12	0.96
22 to 50	0.8	12 to 50	0.64
Spacecraft Y and Z (Lateral) Axes		**Spacecraft Y and Z (Lateral) Axes**	
Frequency (Hz)	Protoflight Level (G's)	Frequency (Hz)	Acceptance Level (G's)
5 to 7	0.5 in D.A.	5 to 7	0.5 in D.A.
7 to 50	1.4	7 to 50	1.12

Table XLI. Sinusoidual Sweep Vibration Test Levels for the GN&C Sensor EM

Spacecraft X (Thrust) Axis		Spacecraft X (Thrust) Axis	
Frequency (Hz)	Protoflight Level (G's)	Frequency (Hz)	Acceptance Level (G's)
5 to 7	0.5 in D.A.	5 to 6	0.5 in D.A.
7 to 22	1.2	6 to 22	0.96
22 to 50	0.5	22 to 50	0.40
Spacecraft Y and Z (Lateral) Axes		**Spacecraft Y and Z (Lateral) Axes**	
Frequency (Hz)	Protoflight Level (G's)	Frequency (Hz)	Acceptance Level (G's)
5 to 8	0.5 in D.A.	5 to 7	0.5 in D.A.
8 to 50	1.6	7 to 50	1.28

Table XLII. Sinusoidual Sweep Vibration Test Levels for the RWA Equipment Module

Spacecraft X (Thrust) Axis		Spacecraft X (Thrust) Axis	
Frequency (Hz)	**Protoflight Level (G's)**	**Frequency (Hz)**	**Acceptance Level (G's)**
5 to 7	0.5 in D.A.	5 to 6	0.5 in D.A.
7 to 22	1.2	6 to 16	0.96
22 to 50	0.8	16 to 50	0.64
Spacecraft Y and Z (Lateral) Axes		**Spacecraft Y and Z (Lateral) Axes**	
Frequency (Hz)	**Protoflight Level (G's)**	**Frequency (Hz)**	**Acceptance Level (G's)**
5 to 9	0.5 in D.A.	5 to 8	0.5 in D.A.
9 to 24	2.2	8 to 24	1.76
24 to 50	1.0	24 to 50	0.8

Table XLIII. Sinusoidual Sweep Vibration Test Levels for the DAS Panel

Spacecraft X (Thrust) Axis		Spacecraft X (Thrust) Axis	
Frequency (Hz)	**Protoflight Level (G's)**	**Frequency (Hz)**	**Acceptance Level (G's)**
5 to 7	0.5 in D.A.	5 to 6	0.5 in D.A.
7 to 22	1.2	6 to 22	0.96
22 to 50	0.8	22 to 50	0.64
Spacecraft Y and Z (Lateral) Axes		**Spacecraft Y and Z (Lateral) Axes**	
Frequency (Hz)	**Protoflight Level (G's)**	**Frequency (Hz)**	**Acceptance Level (G's)**
5 to 7	0.5 in D.A.	5 to 6	0.5 in D.A.
7 to 50	1.1	6 to 50	0.88

Table XLIV. Sinusoidual Sweep Vibration Test Levels for the Battery Panel

Spacecraft X (Thrust) Axis		Spacecraft X (Thrust) Axis	
Frequency (Hz)	**Protoflight Level (G's)**	**Frequency (Hz)**	**Acceptance Level (G's)**
5 to 7	0.5 in D.A.	5 to 6	0.5 in D.A.
7 to 22	1.2	6 to 12	0.96
22 to 50	0.8	12 to 50	0.64
Spacecraft Y and Z (Lateral) Axes		**Spacecraft Y and Z (Lateral) Axes**	
Frequency (Hz)	**Protoflight Level (G's)**	**Frequency (Hz)**	**Acceptance Level (G's)**
5 to 7	0.5 in D.A.	5 to 6	0.5 in D.A.
7 to 50	1.1	6 to 50	0.88

10.9.2.12 Shock Environment

Spacecraft equipment shall be capable of withstanding, without degradation, shock environments resulting from activation of Spacecraft separation/deployment devices. The maximum expected flight shock environment input for each spacecraft assembly is expressed in terms of shock response spectrum and is specified in Figure 4 with a peak value of the shock response spectrum as specified in Table XLV. The shock inputs are specified at the interface points between each assembly and its mounting structure. Individual components mounted within the assembly shall be designed to the level specified for that assembly. For components mounted to brackets, the shock input shall be assumed to be at the interface between the mounting panel and the bracket. The verification test level shall be 1.4 times the maximum expected flight shock level unless an actual separation device is used to produce the test shock.

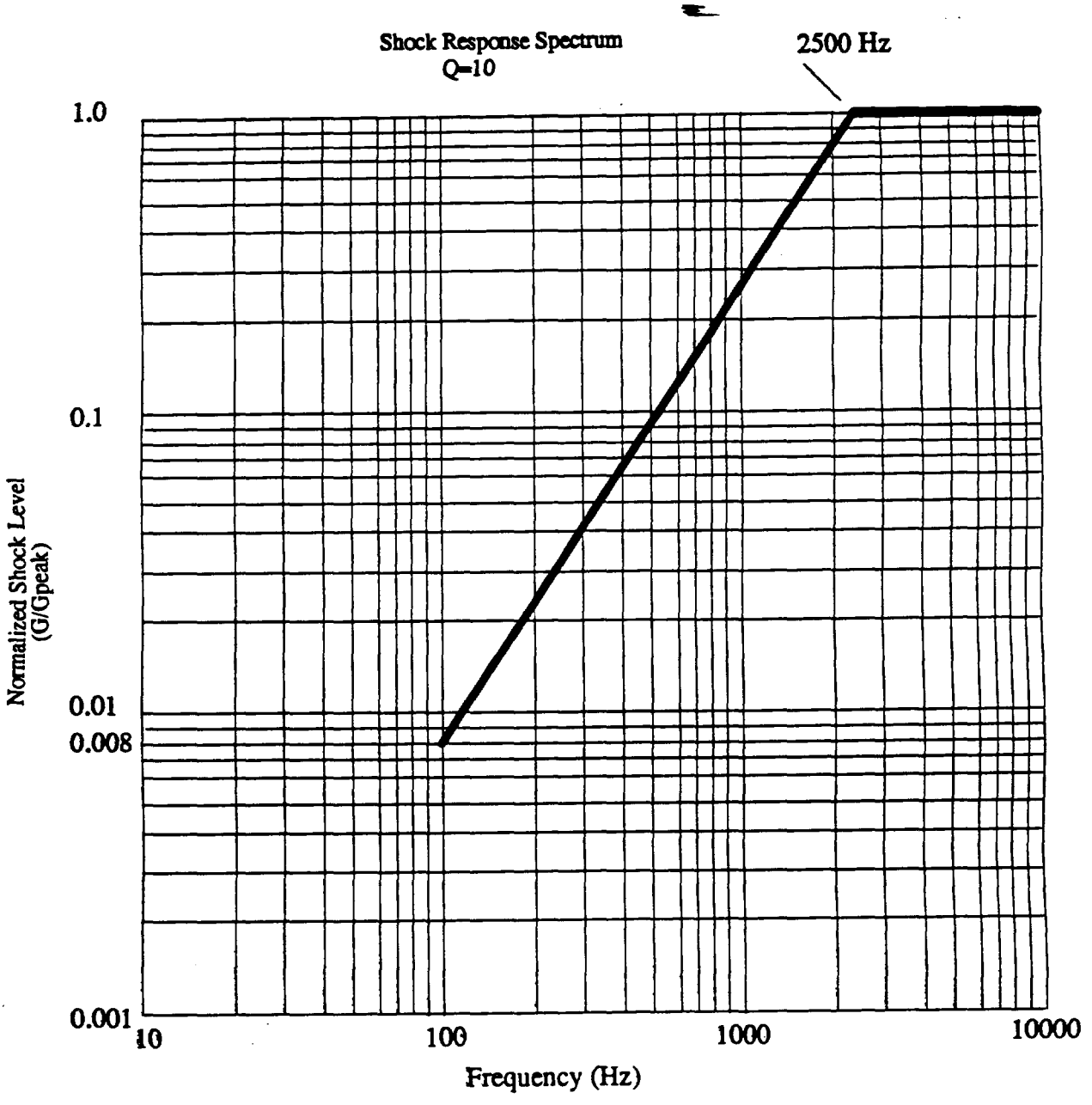

Figure 4. Normalized Shock Response Spectrum

Table XLV. Maximum Expected Flight Shock Levels for Flight Hardware (TBR–16)

Equipment	Shock Response Spectrum G_{peak}
Equipment Modules and Panels	
Power EM	1700
Recorder EM	420
Comm/C&DH EM	180
GN&C Sensor EM	220
RWA EM	520
Battery Panel	1700
DAS Panel	2200
CPHTS Radiator Panels	520
Torque Rod (Bay 1, –Y side) Panel	2200
DAS Antenna Panel	420
ASTER VSR IMP	220
CERES IMP	1700
Other Major Assemblies	
Solar Array	2400
Propulsion Module	5200
HGA	800
Miscellaneous Components	
SAD	680
S–Band Omni Antennas	520

NOTES:
(1) If a single component design is used in multiple locations, the worst case peak shock shall be imposed on the design and documented in the component specification.
(2) Levels derived from Reference j.

APPENDIX II

20 SMS COMMAND AND TELEMETRY LIST(TBR-17)

20.1 Command Requirements

The SMS commands are defined in Table XLVI.

Table XLVI. SMS Command List

Item/Operation	Function	Type	Quantity
HGA Release Assy Control 1-5 (A)	Enable	Relay	5
HGA Release Assy Control 1-5 (B)	Enable	Relay	5
HGA Release Assy Control 1-5 (A)	Disable	Relay	5
HGA Release Assy Control 1-5 (B)	Disable	Relay	5
HGA Release Assy Control 1-5 (A)	Fire	Relay	5
HGA Release Assy Control 1-5 (B)	Fire	Relay	5

20.2 Telemetry Requirements

The SMS telemetry are defined in Table XLVII.

Table XLVII. SMS Telemetry List

Item/Operation	Function	Quantity
HGA Deployment Hinge Potentiometer (Primary)	Position Telemetry	1
HGA Deployment Hinge Potentiometer (Secondary)	Position Telemetry	1
SAD Rotation Angle Potentiometer (Primary)	Position Telemetry	1
SAD Rotation Angle Potentiometer (Secondary)	Position Telemetry	1

(This page intentionally left blank.)

PS20008549
CAGE No. 49671
20 July 1993

Performance Specification Thermal Control Subsystem for EOS–AM Spacecraft (SP–201)

Prepared under:
Contract NAS5–32500
NASA Goddard Space Flight Center
Greenbelt, Maryland 20771

Prepared by:
Martin Marietta Corporation
Astro Space
P.O. Box 800
Princeton, New Jersey 08543–0800

DCC072093

(This page intentionally left blank.)

REVISION LOG

This log identifies those portions of this document which have been revised since the original issue. Revised portions of each page, for the current revision only, are identified by marginal striping.

Revision	Paragraph Number(s) Affected	Rev. Date	Approval
Initial Issue		07/20/93	CM/GSR

(This page intentionally left blank.)

TABLE OF CONTENTS

SECTION / PARAGRAPH	TITLE	PAGE
1	SCOPE	1
1.1	Identification	1
2	APPLICABLE DOCUMENTS	3
2.1	Government Documents	3
2.1.1	NASA Documents	3
2.1.2	Military Documents	3
2.2	Non–Government Documents	4
2.2.1	Martin Marietta Astro Space Documents	4
3	REQUIREMENTS	7
3.1	TCS Definition	7
3.1.1	TCS Diagrams	7
3.1.2	Interface Definition	7
3.1.2.1	Functional Interface Requirements	7
3.1.2.2	Physical Interface Requirements	9
3.1.3	Major Component List	10
3.2	Characteristics	11
3.2.1	TCS Performance	11
3.2.1.1	Instrument TCS Accommodation	11
3.2.1.2	Spacecraft Housekeeping Equipment Temperature Control	11
3.2.1.3	Telemetry	12
3.2.1.4	Commandability	12
3.2.1.5	Heater Requirements	12
3.2.1.6	Thermal Margins and Uncertainties	12
3.2.2	Operational Phases	14
3.2.2.1	Prelaunch Phase	14
3.2.2.2	Launch/Ascent Phase	14
3.2.2.3	Orbit Acquisition Initialization Phase	15
3.2.2.4	Orbit Acquisition Phase	15

TABLE OF CONTENTS (Continued)

SECTION / PARAGRAPH	TITLE	PAGE
3.2.2.5	Operational Initialization Phase	15
3.2.2.6	Operational Phase	15
3.2.2.7	End of Mission Phase	15
3.2.3	Physical Characteristics	15
3.2.3.1	Mass	15
3.2.3.2	Durability	16
3.2.3.3	Layout and Dimensions	16
3.2.3.4	Maintainability Impact on Design	16
3.2.4	Power Characteristics	16
3.2.5	Power Usage	16
3.2.6	Reliability	16
3.2.6.1	Storage Restrictions	16
3.2.6.2	Vulnerability Factors	17
3.2.6.3	Failure Tolerance	17
3.2.6.4	Failure Propagation Restrictions	17
3.2.7	Environmental Conditions	18
3.2.7.1	Storage, Integration and Test	18
3.2.7.2	Shipment	18
3.2.7.3	Launch	18
3.2.7.4	On–orbit	19
3.2.7.5	Electromagnetic Radiation	19
3.2.8	Hazardous Materials	19
3.3	Design And Construction	19
3.3.1	Parts, Materials, and Processes	20
3.3.2	Nameplates and Product Marking	20
3.3.3	Workmanship	20
3.3.4	Interchangeability	20
3.3.5	Safety	20
3.3.5.1	General	20
3.3.5.2	Automatic Hazard Detection and Safing	21

TABLE OF CONTENTS (Continued)

SECTION / PARAGRAPH	TITLE	PAGE
3.3.5.3	Safety Interlock Mechanisms/Techniques	21
3.3.5.4	Liquids and Gasses	21
3.3.5.5	Pressurized Vessels	21
3.4	Documentation	21
3.4.1	Specifications	21
3.4.2	Drawings	21
3.4.3	Technical Manuals	21
3.4.4	Test Plans	21
3.4.5	Test Procedures	22
3.4.6	Installation Instructions	22
3.4.7	Software Documentation	22
3.4.8	Operational Requirements	22
3.5	Logistics	22
3.5.1	Maintenance	22
3.6	Precedence	22
3.6.1	Precedence of Design Criteria	22
3.6.2	Documentation Precedence	22
3.7	Major Component Characteristics	23
3.7.1	Allocations	23
3.7.2	Flight Hardware Component Characteristics	23
3.7.2.1	Capillary Pumped Heat Transport System	23
3.7.2.2	EM Radiator Panels	27
3.7.2.3	Heater Controller Electronics (HCEs)	27
3.7.2.4	Multilayer Insulation	28
3.7.2.5	Heaters	29
3.7.2.6	Temperature Sensors	29
3.7.2.7	Thermistors	29
3.7.2.8	Thermostats	29
3.7.2.9	Thermal Coatings	29
3.7.3	TCS Flight Software Component Characteristics	30

TABLE OF CONTENTS (Continued)

SECTION / PARAGRAPH	TITLE	PAGE
3.7.3.1	TCS Modes	30
3.7.3.2	TCS Processes	30
3.7.3.3	External Software Interfaces	31
4	QUALITY ASSURANCE PROVISIONS	33
4.1	TCS Verification	34
4.1.1	Verification Phases	34
4.1.2	Verification Methods	34
4.1.3	Responsibility for Verification	34
4.1.4	Verification Conditions	34
4.2	Testing	34
4.2.1	Reliability Testing	34
4.2.2	Engineering Evaluation and Test Requirements	34
4.2.2.1	Performance Tests	34
4.2.2.2	Verification Tests	35
4.2.3	Protoflight Testing	35
4.2.4	Acceptance Testing	35
4.2.5	Qualification Testing	35
4.2.6	Installation Testing, and Checkout	35
4.2.6.1	Leak Checking	35
4.2.6.2	Heater Functionality	35
4.2.6.3	Temperature Sensor & Thermistor Functionality	35
4.2.6.4	MLI Blanket Continuity Testing	36
4.3	Special TCS Verifications	36
4.3.1	Heater Dissipation	36
4.4	Test Equipment	36
4.4.1	Test Equipment Safety Features	36
4.4.2	Test Equipment Verification	36
4.4.3	Test Equipment Calibration	36
4.5	Verification Documentation	36
4.6	Responsibility for Verification	37

TABLE OF CONTENTS (Continued)

SECTION / PARAGRAPH	TITLE	PAGE
5	PREPARATION FOR DELIVERY	39
5.1	General	39
5.2	Marking	39
5.3	Packing	39
6	NOTES	41
6.1	Definitions	41
6.1.1	Inspection (I)	41
6.1.2	Analysis/Similarity (A)	41
6.1.3	Demonstration (D)	41
6.1.4	Test (T)	41
6.2	Abbreviations And Acronyms	42
6.3	Exceptions to the GIS and GIIS	44
6.4	Requirements Traceability Matrix	44
	APPENDIX I	
10	COMMAND REQUIREMENTS	45
	APPENDIX II	
20	TELEMETRY REQUIREMENTS	47
	APPENDIX III	
30	HOUSEKEEPING EQUIPMENT TEMPERATURE REQUIREMENTS	49
30.1	Qualification Temperature Limits	49
30.2	Acceptance Temperature Limits	49
30.3	Design Range Temperature Limits	49
30.4	Non–operational Temperature Limits	49
30.5	Non–operational Acceptance Temperature Limits	49
30.6	Non–operational Qualification Temperature Limits	49
30.7	Turn–On Temperature Limits	50

LIST OF FIGURES

FIGURE	TITLE	PAGE
1	Thermal Control Subsystem Functional Block Diagram	8

LIST OF TABLES

TABLE	TITLE	PAGE
I	TCS Functional Interfaces	9
II	TCS Major Components	10
III	Heater Control System Summary	13
IV	Key Thermal Design/Analysis Cases Environmental Parameters	14
V	Power Resource Allocation	17
VI	TCS Allocations	23
VII	HCE Types/Function	28
VIII	Paints/Coatings and Typical Applications	30
IX	TCS Development Plan	33
X	TCS Telemetry List	47
XI	Platform Housekeeping Component Temperature Requirements	50

TBD LOG

ITEM	SECTION	PAGE	SUBJECT	RESP.	DUE
TBD–1	2.1.1	3	UIID date	NASA	S/C PDR
TBD–2	2.1.1	3	UIID date	NASA	S/C PDR
TBD–3	2.2.1	6	ICD date	MMC	S/C PDR
TBD–4	Table III	13	Max heater power update	MMC	S/C PDR
TBD–5	3.2.8	19	Ammonia handling	MMC	S/C PDR
TBD–6	4.2.6.1	35	Leak check spec	MMC	S/C PDR
TBD–7	Table XI	50	Comp Temperature Requirements	MMC	S/C PDR

TBR LOG

ITEM	SECTION	PAGE	SUBJECT	RESP.	DUE
TBR–1	Table II	10	Temp sensor quantity	MMC	TCS CDR
TBR–2	Table II	10	Thermistor sensor quantity	MMC	TCS CDR
TBR–3	Table II	10	Thermostat sensor quantity	MMC	TCS CDR
TBR–4	10	45	Power EM HCE Commands	MMC	S/C PDR

(This page intentionally left blank.)

1 SCOPE

1.1 Identification

This specification establishes the performance, design, development, and test requirements for the Thermal Control Subsystem (TCS) of the Earth Observing System (EOS) Spacecraft. These requirements are derived from the Contract End Item (CEI) Specification, PS20005396, and the documents it cites.

(This page intentionally left blank.)

2 APPLICABLE DOCUMENTS

2.1 Government Documents

The following documents of the exact issue shown form a part of this specification to the extent specified herein.

In the event of a conflict between the documents referenced below and the contents of this specification, the contents of this specification shall take precedence, except as defined in Section 3.6.2 herein.

2.1.1 NASA Documents

421–10–01 1 May, 1992	Requirements Document (RD) for the EOS–AM Spacecraft
420–05–02 13 November 1992	Performance Assurance Requirements (PAR) for the EOS Spacecraft
420–03–02 15 April, 19921 December 1992	General Instrument Interface Specification (GIIS) for EOS
421–12–11–01 29 January 1993	Unique Instrument Interface Document (UIID) for the Advanced Spaceborne Thermal Emission and Reflection Radiometer (ASTER)
421–12–04–01 CH–02, 24 March 1993	Unique Instrument Interface Document for the Moderate–Resolution Imaging Spectrometer (MODIS)–Rev A
421–12–12–02 15 March 1993	Unique Instrument Interface Document for the Clouds and the Earth's Radiant Energy System (CERES)
421–12–03–02 date **(TBD–1)**	Unique Instrument Interface Document for the Multi–Angle Imaging Spectro–Radiometer (MISR)
421–12–15–02 date **(TBD–2)**	Unique Instrument Interface Document for the Measurement of Pollution in the Troposphere (MOPITT)
NHB5300.4(3A–1) December 1976	Workmanship Specification

2.1.2 Military Documents

MIL–STD–1522A 28 May, 1984	Standard General Requirements for Safe Design and Operation of Pressurized Missiles and Space Systems
WSMCR–127–1 December 1989	Western Space and Missile Center Range Safety Regulations

2.2 Non–Government Documents

The following documents of the latest issue shown, form a part of this specification to the extent specified herein. In the event of conflict between the documents referenced herein and the contents of this specification, the contents of this specification shall be considered a superceding requirement, except for higher documents.

2.2.1 Martin Marietta Astro Space Documents

IS20008503 30 April 1993	Launch Vehicle Interface Requirements Document
PS20005396	Contract End Item (CEI) Specification, (SEP–101)
IS20008501	General Interface Specification (GIS) for the Earth Observing System, (ICD–101)
PS20005404	Verification Specification for the Earth Observing System, (VRD–110)
PN20005404	Verification Plan for the Earth Observing System (VRD–100)
PN20005869	Electromagnetic Compatibility (EMC) Control Plan, (SEP–106)
PN20005397 18 March 1992	Product Assurance Implementation Plan, (PA–100)
PN200051412 12 May 1992	Contamination Control Plan
20008536 13 January 1993	EOS–AM Spacecraft Specification Tree
PN20008652	Critical Items List, PA–510
PN20008664 30 September 1992	Comprehensive Test Plan
20008648	Program Authorized Parts List
PN20008650 18 March 1992	Program Approved Materials and Processes Selection List, (PA460)
PN20008607 15 June 1992	Ground Rules and Assumptions for Failure Modes and Effects Analysis (FMEA)
PN20008608 15 June 1992	Ground Rules and Assumptions for Reliability Assessment

PS20008662	EOS–AM Spacecraft Flight Software System Requirements Specification
PS20008558	EOS–AM CPHTS EDM Coldplate
PS20008559	EOS–AM CPHTS Flight Coldplate
PS20008557	EOS–AM CPHTS EDM Heat Pipe Heat Exchanger
PS20008724	EOS–AM CPHTS Flight Heat Pipe Heat Exchanger
PS20008726	EOS–AM CPHTS EDM CCHP
PS20008726	EOS–AM CPHTS Flight CCHP
PS20008560	EOS–AM CPHTS EDM Fluid Reservoir
PS20008524	EOS–AM CPHTS Flight Fluid Reservoir
PS20008561	EOS–AM CPHTS EDM NCG Trap
PS20008525	EOS–AM CPHTS Flight NCG Trap
PS20008563	EOS–AM CPHTS EDM Fill and Drain Valve
PS20008526	EOS–AM CPHTS Flight Fill and Drain Valve
PS20008555	EOS–AM Equipment Module EDM VCHP (draft)
PS20008710	EOS–AM Equipment Module Flight VCHP (draft)
PS20008556	EOS–AM Equipment Module EDM CCHP
PS20008711	EOS–AM Equipment Module Flight CCHP (draft)
PS20008788	EOS–AM TCS Heater Specification (draft)
PS20008790	EOS–AM TCS Thermistor Specification (draft)
PS20008791	EOS–AM TCS Temperature Sensor Specification (draft)
PS20008789	EOS–AM TCS Thermostat Specification (draft)
PS20008785	EOS–AM TCS HCE Specification (Type 2) (draft)
PS20008786	EOS–AM TCS HCE Specification (Type 3) (draft)
PS20008787	EOS–AM TCS HCE Specification (Type 4) (draft)
PS20008795	EOS–AM TCS HCE Specification (Type 5) (draft)

PS20040108	EOS–AM CPHTS EDM Flexible Metal Line
PS20040046	EOS–AM CPHTS EDM Absolute Pressure Switch
20043119	Ground System Requirements Database
ICD20008813 14 May 1993	Interface Control Drawing (ICD), Thermal, Earth Observing System to ASTER
ICD20008823 03 June 1993-	Interface Control Drawing, Thermal, Earth Observing System to CERES
ICD–20008833 18 December 1992	Interface Control Drawing, Thermal, Earth Observing System to MISR
ICD–20008843 09 April 1993	Interface Control Drawing, Thermal, Earth Observing System to MODIS
ICD–20008853 date (**TBD–3**)	Interface Control Drawing, Thermal, Earth Observing System to MOPITT
Source:	Martin Marietta Astro Space P. O. Box 800 Princeton, NJ 08543–0800

3 REQUIREMENTS

The TCS shall meet all performance requirements specified herein.

3.1 TCS Definition

The TCS maintains all Spacecraft housekeeping equipment and Instrument interface temperatures within allowable temperature limits, thermal gradients, and temperature transition limits, for all planned environmental and thermal loading conditions encountered during integration and testing, prelaunch, launch/ascent, and orbital phases of the EOS AM Spacecraft.

The TCS functions are accomplished using both passive (surface finishes, multilayer insulation (MLI), equipment location, selective conductive couplings, etc.) and active (equipment module (EM) heat pipe radiators, connection to a Capillary Pump Heat Transport System (CPHTS), and heaters) thermal control techniques.

During I&T and prelaunch phases, nonflight control systems will augment the flight TCS.

3.1.1 TCS Diagrams

A functional block diagram of the TCS is shown in Figure 1.

3.1.2 Interface Definition

3.1.2.1 Functional Interface Requirements

The functional interfaces for the TCS are shown in Table I.

3.1.2.1.1 TCS/Software Logical Interfaces

The TCS shall accept commands from the Command and Data Handling (C&DH) Subsystem via the Bus Data Unit (BDU), including any ground–initiated override commands of autonomous reconfiguration actions.

3.1.2.1.2 TCS/C&DH Logical Interfaces

[1] The TCS shall accept command inputs received by the Spacecraft from ground control which include heater controller commands. A ground command override shall be provided to permit ground initiated disabling and set–point changes, if applicable, of all automatically controlled heaters.

[2] The Spacecraft TCS telemetry to be recorded and sent to ground control shall include temperature sensor data, pressure switch data, heater status, and heater set–point temperature, as applicable. All mission–critical telemetry shall be designed with redundancy.

[3] The TCS components shall be commandable to known states regardless of earlier states.

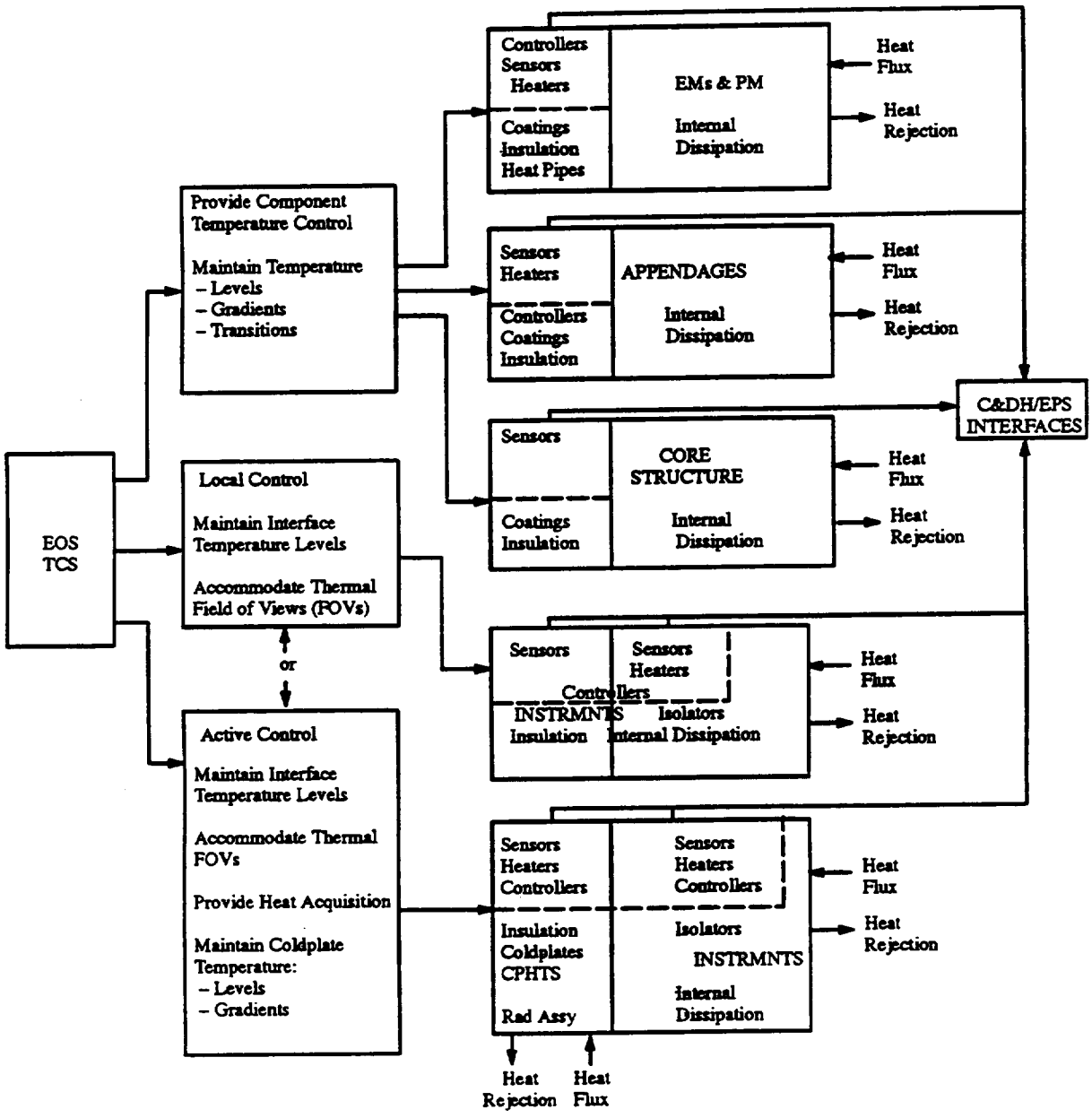

Figure 1. Thermal Control Subsystem Functional Block Diagram

Table I. TCS Functional Interfaces

Input	Source	Activity	H/W or S/W	Output	Destination	Mode
Thermal dissipation	Subsystem components, & actively controlled Instruments	S/C operation	H/W	Heat	Space	all
Electrical Power	EPS	Primary Voltage Source	H/W	Secondary voltages	HCE circuitry	all
Electrical Power	EPS	Primary Voltage Source	H/W	Heat	Heater Controlled Components	all
Component Data	Temp sensors, Press switch, status relays	Component and Instrument Interface monitoring	H/W, S/W	Voltage	C&DH	all
Heater Commands	C&DH	Enable and/or override heater switching	S/W	Command heaters enable/disable	Heater Controlled Components	all
Mounting Support	SMS	Structural support	H/W	Stress	Structure	all

3.1.2.2 Physical Interface Requirements

The TCS shall comply with the electrical, mechanical and thermal interface requirements as defined in the GIS, IS20008501, Sections 3.0, 4.0 and 5.0.

3.1.2.2.1 TCS/Instrument Interfaces

TCS components mounted on Instrument support structure shall comply with the General Instrument Interface Specification (GIIS) 420–03–02 and UIIDs. The TCS interfaces with Instruments are defined in the Instrument Thermal Interface Control drawings (20008813 ASTER, 20008823 CERES, 20008833 MISR, 20008843 MODIS, 20008853 MOPITT).

3.1.2.2.2 TCS/Appendage Interfaces

The TCS interfaces with major Spacecraft appendages (e.g., Solar Array, PS2008514, and High Gain Antenna, PS20008513) are defined in the Mechanical Interface Control drawings and Contract End Item Specifications.

3.1.2.2.3 Electrical Interfaces

The TCS components shall use EPS–provided electrical power based on bus voltages of 120 Vdc or 28 Vdc.

3.1.2.2.4 TCS/I&T Physical Interfaces

[1] The TCS shall be designed to allow ground testing of thermal components at both component and spacecraft levels.

[2] The TCS shall provide interfaces to GSE as required to allow Spacecraft testing in an ambient I&T environment without exceeding component temperature limits.

3.1.2.2.5 TCS/ELV Physical Interfaces

The TCS design shall comply with the requirements of the Launch Vehicle Interface Requirements Document, IS20008503.

3.1.3 Major Component List

Table II lists the major components of the TCS. Basic requirements for this equipment are described in Section 3.7.

Table II. TCS Major Components

S/S Component	Qty[1]	Major Function (Location)
Capillary Pumped Heat transfer Assembly – Capillary Coldplate – Interface Gasket – Fluid Lines – Radiator Structure – Heat Pipe Heat Exchanger – Radiator CCHPs – Reservoir – Fill/Drain Valve – Non Condensible Gas Trap – Pressure Switch	3	Three systems provide independent Instrument Interface active thermal control for ASTER– TIR, ASTER–SWIR, and MOPITT.
TR EM Variable Conductance Heat Pipe (VCHP)	8	TR EM structure and equipment temperature modulation
EM Constant Conductance Heat Pipe (CCHP)	24	Heat spreaders in the EMs
Heater Control Electronics (HCE)	63	Controls heater operation
Multi–layer Insulation	AR	Radiatively isolates structures and equipment
Heaters	AR	Actively maintain structure and components above minimum allowable (operational/non–operational/survival) temperature limits
Temperature Sensors	392[2] (TBR–1)	Monitor structure and equipment temperatures
Thermistors	332 (TBR–2)	Provides temperature inputs to HCEs
Thermostats	156 (TBR–3)	Provides on/off signal to HCE for heater control Provide temp inputs to PM HCEs. Provide over/under temp protection for CPHTS and Battery HCEs.
Thermal Coatings	AR	Passively control structure and equipment temperatures

Notes: 1 AR = "As required" quantity
2 Not including Instrument and certain component internal telemetry

3.2 Characteristics

3.2.1 TCS Performance

In general, the TCS shall maintain all Spacecraft components and Instrument interfaces within their allowable temperature ranges. These requirements shall be maintained during the environments specified in Section 3.2.7.

3.2.1.1 Instrument TCS Accommodation

3.2.1.1.1 Instrument Interface Temperature Control

[1] The TCS shall maintain instrument mechanical mounting interface temperatures between 0° and 30°C for all operating modes and between –25° and 50°C for survival modes.

[2] For actively–controlled Instruments, the TCS shall maintain the coldplate surface mounting temperature between 20° and 25°C during all coldplate heat load conditions between 10% of the maximum specified coldplate capacity, and 100% of the Instrument projected loads. During survival mode the TCS shall maintain the coldplate mounting surface between –25° and 50°C. The interface between the CPHTS coldplate and Instrument shall use a mounting bolt arrangement as specified in the Instrument TICD and a gasket interface material between Instrument and coldplate surfaces.

3.2.1.1.2 Local Instrument Thermal Control

[1] Local instrument thermal control will be designed, defined and provided by the Instrument Provider.

[2] The TCS shall comply with the required Instruments' fields–of–view (including the radiator fields–of–view) defined in the Instrument ICDs.

3.2.1.1.3 Spacecraft–Provided Instrument Thermal Control

The TCS shall autonomously provide three instrument thermal control CPHTSs, including one each for MOPITT, ASTER–TIR, and ASTER–SWIR. Each CPHTS shall consist of a fully redundant, two–phase, active closed–loop system. In addition, each CPHTS coldplate shall have provision for enabling separate (to the flight system) auxiliary ground cooling capabilities.

3.2.1.1.3.1 CPHTS Leak Detection

[1] The TCS CPHTS shall incorporate pressure sensors which enable the detection of leaks on–orbit. The CPHTS design shall allow accessibility by leak detection apparatus at the highest level of assembly, as practical.

[2] The Spacecraft and/or ground support equipment (GSE) shall incorporate the necessary sensors to enable the detection, location, and repair of leaks in the TCS during ground operations.

3.2.1.2 Spacecraft Housekeeping Equipment Temperature Control

Housekeeping temperature requirements are listed in Appendix III.

[1] The TCS shall autonomously maintain Spacecraft housekeeping components within the temperature ranges specified in Table XI of Appendix III during the planned mission phases/modes.

[2] The TCS shall provide EM radiator panels to enable equipment heat rejection to space. The panels may contain CCHPs, or conductive facesheets, to uniformly spread equipment heat.

[3] EM radiator panels and other Spacecraft areas designated as thermal radiators shall be coated with materials having a low ratio of solar absorptance (α) to IR emittance (ε), to provide the required heat rejection capability.

[4] Multi–layer Insulation and/or low ε material shall be used to radiatively isolate selected structure and components, as required.

[5] The TCS shall minimize housekeeping equipment heater power requirements.

3.2.1.3 Telemetry

[1] The TCS shall provide temperature, heater status, and pressure telemetry sensors to obtain health and status information, monitor critical component temperatures and TCS functions (see Appendix II), and assist in fault detection and correction.

[2] TCS telemetry shall be available in all ground and flight phases of the mission.

[3] The telemetry content shall remain constant among modes to the extent such data is available in each given mode.

3.2.1.4 Commandability

The TCS commands are listed in Appendix I.

[1] The TCS shall accept, and execute upon receipt, all commands.

[2] The TCS shall accept and execute commands to override or inhibit the execution of automatic functions.

[3] No single TCS or TCS component command shall place the Spacecraft, any subsystem, or any other component into a configuration from which it cannot recover.

[4] During normal operations, the TCS shall not rely on any ground commands to meet temperature maintenance requirements.

3.2.1.5 Heater Requirements

The TCS shall provide heaters and control capability for all components listed in Table III. Heaters and controllers shall be functionally redundant

3.2.1.6 Thermal Margins and Uncertainties

3.2.1.6.1 Modelling Uncertainties

To ensure adequate TCS design margins, a ±5°C value for modelling uncertainties shall be applied to all computer–output temperature predictions through the design phase of the program (prior to Spacecraft thermal balance testing).

Table III. Heater Control System Summary

Location (BDU) & Component	Voltage (V)	Quantity[1]	Type of Control[2]	Set Point (°C)[3]	Max Power (W) (TBD–4)	Comments
Battery	120	2	5	–5		Operational
PEM BPC 1 & 2	120	1	2	–10		Operational[4]
PEM PDU	120	1	2	–10		Operational[4]
PEM FSSH	120	1	2	–10		Operational
RWA	120	4	2	–10		Operational
REM DCU	120	2	2	–10		Operational
REM BDU	120	1	2	–10		Operational[4]
REM DMU	120	1	2	–20		Non–Operational
REM KSA/SFE	120	1	2	–20		Non–Operational
REM DAS Mod	120	1	2	–20		Non–Operational
SEM BDU	120	1	2	–10		Operational[4]
SEM IRU	120	1	2	+10		Operational
SEM MAG	120	2	2	–10		Operational
SEM STA	120	1	2	–20		Non–Operational[4]
SEM STA	120	1	2	–10		Operational
CEM SCC	120	2	2	–10		Operational
CEM SBIU	120	1	2	–10		Operational
CEM BRF/FDB	120	1	2	–10		Operational
CEM CTIU	120	2	2	–10		Operational
CEM SAD	120	1	1	–10		Operational
CEM SSU	120	1	1	–10		Operational
CEM HGA Hinge	120	1	1	+30 ±2		Start up
DAS BDU/FDB	120	1	2	–10		Operational[4]
DAS Xmtr//UPC	120	1	2	–20		Non–Operational
PM TCV	28	4	4	+12		Operational
CPHTS Reservoir	120	6	3	–10/+30		Variable set point
CPHTS Coldplate	120	3	2	–25		Non–Operational
CPHTS HPHX	120	3	2	–25		Non–Operational
CPHTS Vapor Lines	120	9	2	+45		Start up htrs
CPHTS Coldplate	120	3	2	+45		Start up htrs
IBDU	120	3	2	–10		Operational

Notes: 1 Number of heater control circuits (each one fully redundant)
2 Refer to HCE types in section 3.7.2.3
3 Heater turn on temperature
4 Used in Survival mode

3.2.2 Operational Phases

The Spacecraft TCS operating states associated with the Spacecraft operating phases and modes as defined by the CEI Specification PS20005396, Table I, are defined in the following paragraphs. Key environmental parameters for the thermal analysis cases are defined in Table IV.

Table IV. Key Thermal Design/Analysis Cases Environmental Parameters

Mission Phase	Case	Mode	Beta Angle	Solar (W/Sqin)	Albedo %	Ear IR (W/Sqin)	Orbit Altitude (km)
Operational:							
	Science EOL	Science	13.5	0.911	0.329	0.157	705
	" "	"	18.0	0.910	0.336	0.155	"
	" "	"	30.8	0.860	0.336	0.155	"
	Science BOL	Science	15.0	0.871	0.315	0.148	705
	" "	"	22.0	0.871	0.315	0.148	"
	" "	"	30.0	0.901	0.315	0.148	"
	Survival BOL	Survival	15.0	0.871	0.315	0.148	705
	" "	"	22.0	0.871	0.315	0.148	"
	" "	"	30.0	0.901	0.315	0.148	"
	SPSM EOL	Safe	30.8	0.860	0.336	0.155	705
	" "	"	30.8	0.860	0.336	0.155	"
	SPSM BOL	Safe	15.0	0.871	0.315	0.148	705
	" "	"	15.0	0.871	0.315	0.148	"
OAI:							
	OAI BOL	Survival	15.0	0.871	0.315	0.148	550x705
	" "	"	22.0	0.871	0.315	0.148	"
	" "	"	30.0	0.901	0.315	0.148	"
	OAI Safe	Safe	15.0	0.871	0.315	0.148	550x705
	" "	"	22.0	0.871	0.315	0.148	"

3.2.2.1 Prelaunch Phase

On–stand, the air within the launch vehicle fairing shall be held within the temperatures specified in IS20008503. The CPHTS shall not be operational during the prelaunch mode. Conditioned air provided by the launch vehicle shall supplement equipment cooling.

3.2.2.2 Launch/Ascent Phase

The TCS shall maintain non–operating design temperatures for all non–operating equipment and operating temperatures for all operating equipment. The CPHTS shall not be operational during the launch and ascent phase. Primary (operational/survival) heaters shall normally be enabled as required.

3.2.2.3 Orbit Acquisition Initialization Phase

The TCS shall maintain non–operating design temperatures for all non–operating equipment and operating temperatures for all operating equipment. The CPHTS shall not be operational. Primary (operational/survival) heaters shall normally be enabled as required.

3.2.2.4 Orbit Acquisition Phase

The TCS shall maintain non–operating design temperatures for all non–operating equipment and operating temperatures for all operating equipment. The CPHTS shall not be operational. Primary (operational/survival) heaters shall normally be enabled as required.

3.2.2.5 Operational Initialization Phase

The TCS shall maintain non–operating design temperatures for all non–operating equipment and operating temperatures for all operating equipment. The Flight Operations team will perform start–up and check–out procedures for the CPHTS during this phase. Primary (operational/survival) heaters shall normally be enabled as required.

3.2.2.6 Operational Phase

[1] During Science mode, the TCS shall maintain all spacecraft operating components, and Instrument interfaces, within their allowable operational temperature limits, and non–operating components within their non–operating design limits.

[2] The TCS shall design for up to 20 minutes per orbit of TDRSS single access service divided into an average of two or fewer contacts per orbit. The TCS shall also support a missed TDRSS contact, as well as operations required to make up the missed contact.

[3] The CPHTS shall normally be operational. When actively controlled Instruments are in their non–operational mode (i.e., non–operational except for heaters), the coldplate interface temperature shall be maintained at –25° to 50°C. Primary (operational/non–operational) and back–up heaters shall normally be enabled as required.

[4] During non–operational modes, the TCS shall maintain non–operating design temperatures for all non–operating equipment and operating temperatures for all operating equipment. Primary (operational/non–operational) and back–up heaters shall normally be enabled as required.

[5] On a case–by–case basis, certain operating and non–operating components may exceed their respective operational or non–operational temperature limits during a single failure case. Operational and non–operational qualification limits shall not be exceeded.

3.2.2.7 End of Mission Phase

Heaters shall normally be enabled.

3.2.3 Physical Characteristics

3.2.3.1 Mass

[1] The total weight of the TCS shall not exceed 395 lbs.

[2] The equipment center–of–mass, products of inertia, and mass estimate accuracies shall be as specified in the GIS, IS20008501, Section 4.

3.2.3.2 Durability

[1] The TCS shall be made up only of materials and components capable of withstanding the environmental conditions specified in Section 3.2.7, without evidence of damage as defined below.

[2] For the mission life, the TCS shall also be capable of withstanding, without evidence of physical damage (as defined below), any wear due to the functioning of the system.

[3] Damage shall be considered to be any change in the TCS or components which may degrade TCS performance to levels below those specified herein.

3.2.3.3 Layout and Dimensions

The TCS layout and maximum component dimensions shall be in accordance with the component ICDs.

3.2.3.4 Maintainability Impact on Design

[1] To the extent practical, the TCS shall facilitate maintenance by being functionally, mechanically, and electrically independent from all other Spacecraft elements except as stated in Section 3.1.2 herein.

[2] The TCS shall be designed to use existing ground support equipment (GSE) to perform maintenance functions, wherever practical, rather than requiring the design of new equipment.

[3] Spacecraft thermal design and external coatings shall be selected to minimize ground maintenance requirements.

3.2.4 Power Characteristics

The TCS shall operate per the performance requirements specified herein when supplied power as specified in the GIS, IS20008501, Section 3.

3.2.5 Power Usage

The TCS shall draw power within the bounds indicated in Table V.

3.2.6 Reliability

[1] The design goal for the probability of mission success (Ps) for the TCS shall be at least 0.998 for a mission life of five years. Mission success is defined as meeting all performance criteria specified in Section 3.2.

[2] The TCS reliability program shall comply with the requirements of the PAR, GSFC 420–05–02.

3.2.6.1 Storage Restrictions

Limited–life components which may require change–out during storage shall be identified and tracked in the Critical Items List, 20008652.

Table V. Power Resource Allocation

	Power Resource Allocation (W)
Ground Test Mode	56
Launch/Ascent Mode	56
Stand–by Mode	296
Delta–V Mode–Level 0[1]	780
Delta–V Mode–Level 2[2]	296
Science Mode–BOL	296
Science Mode–EOL	145
Survival Mode	780
Safe Mode–Level 0[1]	800
Safe Mode–Level 8[2]	296

Notes: 1 Maximum TCS power allocation for this S/C operating mode corresponding to the maximum S/C thermal dissipation

2 Minimum TCS power allocation for this S/C operating mode corresponding to the minimum S/C thermal dissipation

3.2.6.2 Vulnerability Factors

The following steps shall be taken to reduce TCS vulnerability to damage:

[1] Radiators shall utilize covers during ground handling.

[2] TCS components which are fragile or otherwise susceptible to damage shall, where practical, be guarded or located so as to reduce this susceptibility.

3.2.6.3 Failure Tolerance

[1] The TCS shall be tolerant of any single, credible, hard failure, including a failure in the Electrical Accommodation Subsystem (EAS) harness servicing the TCS.

[2] No TCS failure shall induce any other single failure.

[3] After any single TCS failure, the TCS shall continue to provide at least the minimum services identified for TCS survival mode without any interruptions which may threaten the survival of any Spacecraft component or Instrument.

3.2.6.4 Failure Propagation Restrictions

[1] No single failure shall cause loss of a redundant functional path for any critical function.

[2] No event causing the loss of any critical or non–critical functional path shall result in loss of the alternate or redundant path.

[3] No single failure of a TCS component shall propagate failures to other S/C elements.

3.2.7 Environmental Conditions

[1] The TCS components shall remain undamaged during,

[2] and following exposure to the protoflight environmental test levels corresponding to the environments defined in the GIS, IS20008501 Section 6.

[3] The TCS and its components shall remain undamaged during,

[4] and following exposure to the acceptance environmental test levels corresponding to the environments defined in the GIS, IS20008501 Section 6.

[5] Test levels shall be as defined in the Verification Specification, PS20005404.

[6] Damage shall be as defined in Section 3.2.3.2.

[7] Where practical, the TCS shall not impose operational constraints due to natural environment conditions during check–out, launch, and on–orbit operations.

3.2.7.1 Storage, Integration and Test

[1] The TCS shall be capable of being held for testing or storage for the period defined in IS20008501 Section 6, under the prelaunch conditions stated there for [1] thermal, [2] contamination, [3] humidity, and [4] electromagnetic interference (EMI), without suffering any damage as defined above.

[2] Testing of three dimensional fluid systems in 1–g using gravity assist or reflux mode shall be considered an appropriate spacecraft test method; however, thermal system performance shall be validated at lower levels of assembly in CPHTS or heat pipe mode.

[3] Supplemental cooling methods, e.g., local air conditioning (for EMs and Batteries) or instrument auxiliary cooling using the coldplate auxiliary cooling system, shall be provided, as required, for ground testing in ambient conditions.

[4] TCS items requiring frequent access during I&T and/or rapid prelaunch maintenance shall be readily accessible.

3.2.7.2 Shipment

The TCS shall comply with the following transportation environmental requirements as defined in IS20008501 Section 6: [1] thermal, [2] contamination, [3] humidity, [4] EMI, [5] loads, and [6] shock. The Spacecraft is assumed to be horizontal for all flight transportation and either horizontal or vertical for all ground vehicle transportation.

3.2.7.3 Launch

[1] The TCS shall comply with the following launch environmental requirements as defined in IS20008501 Section 6: [1] thermal, [2] contamination, [3] Radiated RF, [4] EMI, [5] loads, [6] shock, [7] pressure, [8] acoustic vibration, [9] lightning and [10] cosmic ray.

[2] The design temperature ranges of the Spacecraft shall be such that they shall not be exceeded during prelaunch, launch, and during flight after the ELV fairing is jettisoned.

3.2.7.4 On–orbit

The TCS shall comply with the following on–orbit environmental requirements as defined in IS20008501 Sections 5 and 6: [1] thermal, [2] contamination, [3] pressure, [4] EMI, [5] loads, [6] shock, [7] orbital debris, [8] micrometeoroids, [9] vibration, [10] charged particle, [11] atomic oxygen, [12] magnetic, and [13] electrostatic discharge.

3.2.7.4.1 Solar Radiation

The TCS shall be capable of meeting all specified performance during exposure to solar radiation of 0.856 W/in^2 to 0.915 W/in^2 incident on the Spacecraft throughout all phases of spacecraft life.

3.2.7.4.2 Albedo

The TCS shall meet all specification performance requirements while exposed to earth–reflected solar (albedo) radiation of 0.311 to 0.336 of total solar radiation incident on the Spacecraft throughout all phases of spacecraft life.

3.2.7.4.3 Earth Infrared Radiation

The TCS components shall be capable of meeting the specified performance required during exposure to incident earth infrared radiation of 0.148 W/in^2 to 0.157 W/in^2.

3.2.7.4.4 Solar Entrapment

The TCS shall protect against the adverse effects of solar entrapment due to appendage, equipment module, or instrument placement on the Spacecraft.

3.2.7.5 Electromagnetic Radiation

[1] The TCS shall be compatible with the mission orbit electromagnetic radiation environment and meet the requirements specified by the EMC Control Plan, PN20005869.

[2] The TCS and its components shall comply with the ionizing radiation design requirements specified in the GIS, IS20008501, Section 6.

3.2.8 Hazardous Materials

[1] The TCS shall comply with the requirements for hazardous materials, flammability, and offgassing specified in PAR, during all handling of the CPHTS ammonia working fluid.

[2] Precautions shall be taken for transportation of the CPHTS ammonia working fluid in accordance with the requirements specified in (TBD–5).

3.3 Design And Construction

[1] The TCS shall be of a modular construction to the extent practical to facilitate I&T.

[2] Standardized hardware, software, data formats and procedures shall be utilized to facilitate maintenance.

[3] All electrical connectors shall be selected , sized , keyed and/or marked to ensure that incorrect attachment to the mating connector is prevented. The connectors shall attach such that they cannot be inadvertently unlocked during ground operations.

[4] The design of TCS equipment shall include handling features which reduce the likelihood of damage to any flight equipment.

3.3.1 Parts, Materials, and Processes

Parts, materials, and processes used in the TCS shall be selected and controlled in accordance with the requirements of section 4 of the GIS, IS20008501.

3.3.2 Nameplates and Product Marking

[1] All TCS elements shall be labelled in accordance with the requirements of section 4 of the GIS, IS20008501.

[2] Items of identical or similar form which have different functional characteristics shall be readily identifiable and distinguishable through marking or other means.

3.3.3 Workmanship

Workmanship during fabrication of the TCS electrical components shall be in accordance with NASA standards as specified in NHB 5300.4 (3A, 3G–3K).

3.3.4 Interchangeability

TCS elements, with the same part numbers, shall be interchangeable as defined in section 4 of the GIS, IS20008501.

3.3.5 Safety

[1] Measures for personnel safety shall be taken in all phases of the design, manufacturing, and testing, in order to ensure personnel safety in accordance with WSMCR 127–1. The design shall meet the factors of safety presented in section 4 of the GIS, IS20008501.

[2] The TCS shall comply with the requirements of the Safety section of the Product Assurance Implementation plan (PAIP), 20005397.

3.3.5.1 General

[1] Where practical, hazards shall be eliminated or removed through appropriate design measures.

[2] Remaining hazards shall be controlled through the use of warning devices and/or special procedures.

[3] Hazards which cannot be eliminated or removed shall, where practical, be prevented through incorporation and use of safety devices or features.

3.3.5.2 Automatic Hazard Detection and Safing

[1] Automated detection and safing of hazards which may cause personnel injury or loss of the Spacecraft shall be independent of those subsystems being monitored.

[2] Where practical, the detection and safing of lesser hazards shall also follow this practice.

3.3.5.3 Safety Interlock Mechanisms/Techniques

The Spacecraft Bus shall incorporate safety interlock mechanisms, implemented in hardware or software to prevent the execution of predefined commands which are potentially hazardous to personnel or to the Spacecraft without prior confirmation or arming by ground operators.

3.3.5.4 Liquids and Gasses

[1] The design of TCS components which utilize liquids or gasses shall preclude hazards due to the release of such fluids during maintenance operations.

[2] CPHTS system fill/drain valve position (open/closed) shall be readily ascertained visually while on the ground.

[3] CPHTS fluid lines shall be functionally identifiable at each end.

3.3.5.5 Pressurized Vessels

[1] The TCS includes CPHTS components and EM heat pipes, which shall be designed to include the pressurized equipment factors of safety specified in section 4 of the GIS, IS20008501.

[2] All heat pipes and CPHTS components shall be considered pressurized components, with the exception of the CPHTS reservoir, which shall be considered to be a pressurized vessel.

3.4 Documentation

3.4.1 Specifications

All parent and component specifications associated with this specification are shown in the EOS–AM Spacecraft Specification Tree, 20008536.

3.4.2 Drawings

a. Spacecraft MLI drawings

b. Instrument TICDs (see 3.1.2.2.1)

c. HCEs

3.4.3 Technical Manuals

3.4.4 Test Plans

a. Thermal Control Subsystem Test Plan, PN20008664

3.4.5 Test Procedures

a. TCS Subsystem Integration, TP–SIC–20008549

b. TCS Functional Test, TP–FTE–20008549

c. TCS Comprehensive Performance Test, TP–CPTE–20008549

d. TCS Aliveness Test, TP–AT–20008549

3.4.6 Installation Instructions

a. Spacecraft MLI installation drawing

3.4.7 Software Documentation

All Computer Software Configuration Items (CSCIs) shall be documented as specified in the Software Management Plan, 20008655.

3.4.8 Operational Requirements

All operational requirements and constraints shall be documented in the Ground System Requirements Database, 20043119.

3.5 Logistics

3.5.1 Maintenance

The TCS shall be designed to require no maintenance after testing other than that required during long periods of storage. TCS equipment shall be accessible during these periods.

3.6 Precedence

3.6.1 Precedence of Design Criteria

TCS design decisions shall be made to accommodate the following design criteria in the following order of precedence:

a. Safety

b. Performance

c. Reliability

d. Cost

3.6.2 Documentation Precedence

If conflicts arise between documents, the TCS shall adhere to design requirements as stated in the document nearest the top of the following list of requirement documents. The General Interface Specification (GIS) is applicable to the TCS design only as invoked herein and is therefore not included in the following list:

a. Requirements Document

b. Product Assurance Requirements for the EOS Observatories

c. General Instrument Interface Specification

d. Contract End Item Specification

e. External Interface Control Documents (e.g., EOS to Launch Vehicle, EOS to TDRSS, etc.)

f. Subsystem and Major Assembly Specifications

g. Component Specifications

3.7 Major Component Characteristics

The physical and performance characteristics of the major TCS components are provided in the following paragraphs.

3.7.1 Allocations

The TCS components shall be designed to levels at or below the allocations shown in Table VI.

Table VI. TCS Allocations

Component	Mass (lb)	Power (Watts) Operational	Supply Voltage (volts)
CPHTS – ASTER	114.7	4.8	120
CPHTS – MOPITT	68.5	2.4	120
EM CCHPs	17.4	N/A	N/A
HCEs	65.6	59.1	120,28
MLI	65.3	N/A	N/A
Misc. (coatings, heaters, temp sensors, thermostats)	60.5	76.7	120,28

3.7.2 Flight Hardware Component Characteristics

3.7.2.1 Capillary Pumped Heat Transport System

[1] The CPHTS shall provide separate, independent, Instrument Interface active thermal control for MOPITT and ASTER (SWIR,TIR) as specified in 3.2.1.1.1.

[2] The CPHTS shall use capillary heat transport technology in a closed, two–phase system.

[3] The CPHTS shall be designed to utilize anhydrous ammonia.

[4] The nominal operating pressure of the CPHTS shall be 150 psia .

[5] The system Maximum Expected Operating Pressure (MEOP) shall be 380 psia.

[6] The CPHTS design shall allow Instrument removal from the Spacecraft (prior to launch) without disassembly of the CPHTS.

3.7.2.1.1 CPHTS Coldplate Assembly

[1] The CPHTS Coldplate assembly shall conform to the performance specifications PS20008558 (EDM) and PS20008559 (Flight).

[2] The coldplates shall be designed for heat input through the plate surface which will mount to the instrument; the coldplate shall also be designed for heat input through the opposite plate surface for start–up.

[3] The coldplates shall be connected to both a primary and secondary fluid loop and must be capable of meeting the performance requirements specified herein with only a single loop in operation.

[4] The coldplate shall contain auxiliary ground cooling channels to simulate the CPHTS function during ground testing of the Instrument. The working fluid for the alternate ground cooling channel shall be FC–123 (or similar type fluid).

[5] Key coldplate requirements shall be:

Maximum Load @ 20°C	250 Watts
Minimum Load	25 Watts
Temperature gradients between the coldplate max surface temp and the min surface temp under max uniform heat flux rate of 1.0 Watt/in^2	≤5°C
Maximum Heat Flux	1.0 Watt/in^2
Leakage Rate	<1 x 10^{-7} std cc/sec NH_3
Operating Temperature Range	–45° to +40°C
Non–operating design Temperature Range	–55° to +40°C

3.7.2.1.2 CPHTS Fluid Transport Lines

[1] The fluid transport lines shall provide a path for the CPHTS ammonia working fluid to and from the evaporator coldplate and the condenser radiator assembly, as well as linking control equipment (reservoir, NCG trap) to the rest of the system.

[2] The fluid line shall contain a flexible section, as per PS20040108, permitting ground deployment of the CPHTS radiator.

3.7.2.1.3 CPHTS Radiator Assembly

The CPHTS radiator assemblies shall be body–mounted heat pipe radiators located on the cold side (+Y) of the Spacecraft which provide heat rejection for the CPHTS.

[1] The radiator assemblies shall (a) provide the radiator surface to reject the instrument waste heat transported by the CPHTS, and (b) provide the necessary subcooling of the exiting liquid to ensure proper CPHTS operation.

[2] The radiator assemblies shall consist of honeycomb panels with heat pipe heat exchangers (HPHX), CCHPs, and externally mounted low α/ε surface coating such as Silver Teflon.

[3] Heaters shall be used on the radiator to prevent freezing of the heat pipe working fluid during cold conditions.

3.7.2.1.4 CPHTS Heat Pipe Heat Exchanger (HPHX)

[1] The CPHTS HPHX shall conform to the performance specifications PS20008557 (EDM) and PS20008724 (Flight).

[2] The HPHX shall be an integral unit including a condensing heat exchanger and a heat pipe. Heat transport capability within the heat pipe shall be provided by the inclusion of a groove structure which provides the capillary pumping forces required for heat pipe operation.

[3] The heat pipe shall be a constant conductance type and use anhydrous ammonia (high purity) as the working fluid.

[4] The HPHX shall provide ammonia vapor condensation, heat acquisition and transport capabilities when used in the EOS radiator assemblies.

[5] Key HPHX requirements shall be:

Temperature difference between inlet NH3 vapor and exit liquid at 1.8 lb/hr, minimum	7°C (subcooling)
Heat exchanger total pressure drop @ 4 lb/hr flow rate, max	0.02 psi
Leakage Rate	$<1 \times 10^{-7}$ std cc/sec NH_3
Operating Temperature Range	–55° to +40°C
Non–op design Temperature Range	–65° to +50°C (105°C during panel bonding)

3.7.2.1.5 CPHTS Radiator CCHPs

[1] The CPHTS Radiator CCHPs shall conform to the performance specifications PS20008725 (EDM) and PS20008726 (Flight).

[2] The heat pipe shall be a constant conductance type and use anhydrous ammonia (high purity) as the working fluid.

[3] Heat transport capability shall be provided by the inclusion of an internal groove structure which produces the capillary pumping forces required for heat pipe operation.

[4] The CCHPs shall provide heat acquisition and transport capabilities when used in the EOS radiator assemblies.

[5] Key CCHP requirements shall be:

Leakage Rate	$<1 \times 10^{-7}$ std cc/sec NH_3
Operating Temperature Range	–60° to +40°C
Non–op design Temperature Range	–70° to +40°C (105°C during panel bonding)

3.7.2.1.6 CPHTS Fluid Reservoir

[1] The CPHTS Reservoirs shall conform to the performance specifications PS20008524 (EDM) and PS20008560 (Flight).

[2] The CPHTS fluid reservoir shall control the CPHTS operation by controlling the saturation temperature and pressure of the CPHTS during all operational modes.

[3] During pre–operational modes (storage, on–stand, and ascent) the CPHTS reservoir shall provide storage for the ammonia inventory.

[4] The CPHTS reservoir shall allow no vapor expulsion under normal operating modes and shall maintain NH3 fluid inventory saturation temperature between 9° and 35°C (normal operation) through the use of heaters and radiative/conductive cooling.

[5] Key Reservoir requirements shall be:

Leakage Rate	$<1 \times 10^{-7}$ std cc/sec NH_3
Operating Temperature Range	–25° to +40°C
Non–op design Temperature Range	–35° to +50°C
Max Pressure drop (full heater power)	0.1 psi
Expulsion Rate	>70% free volume in 45 min @ 30 W heater power

3.7.2.1.7 CPHTS Fill/Drain Valve(FDV)

[1] The CPHTS Fill/Drain Valve shall conform to the performance specifications PS20008563 (EDM) and PS20008526 (Flight).

[2] The fill/drain valves shall be used to charge and drain the CPHTS. Valve position indicators shall be required of these valves.

[3] Key FDV requirements shall be:

Activation method	Manual
Total pressure drop @ 10 lb/hr NH_3 flow rate, maximum	0.01 psi
Leakage Rate	$<1 \times 10^{-7}$ std cc NH_3
Operating Temperature Range	–60° to +40°C
Non–op design Temperature Range	–70° to +50°C

3.7.2.1.8 CPHTS NCG Trap

[1] The CPHTS NCG Trap shall conform to the performance specifications PS20008561 (EDM) and PS20008525 (Flight).

[2] The non–condensible gas (NCG) trap shall consist of a mechanism which entraps non–condensible gas bubbles contained within the liquid ammonia circulating through the CPHTS. The trap shall also provide a storage volume capable of storing the gas collected during its useful life.

[3] Key NCG Trap requirements shall be:

Total Storage Volume	40 cc (H_2 @ 16°C)
Total pressure drop @ 4 lb/hr NH_3 flow rate, maximum	<0.02 psid
Leakage Rate	$<1 \times 10^{-7}$ std cc/sec NH_3
Operating Temperature Range	–60° to +40°C
Non–op design Temperature Range	–70° to +50°C

3.7.2.1.9 CPHTS Absolute Pressure Switch

[1] The CPHTS absolute pressure switches shall detect fluid system under–pressure during the mission.

[2] The CPHTS absolute pressure switch shall conform to the performance specification PS20040046.

Key CPHTS pressure switch requirements shall be:

Source current	1mA
Output voltage	0–0.5V no leak; 10V leak
Pressure Range	0 to 950psia
Actuating set point	12 ± 1.2 psia
Leakage Rate	$<1 \times 10^{-7}$ std cc/sec NH_3
Operating Temperature Range	–60° to +40°C
Non–op design Temperature Range	–70° to +50°C

3.7.2.2 EM Radiator Panels

The EM radiator panels shall provide the surface area over which heat rejection to space occurs. They shall be covered with Silver Teflon, or equivalent radiator material, to enhance their heat rejection capability. The panels may contain CCHPs to uniformly spread equipment heat.

3.7.2.2.1 Constant Conductance Heat Pipes (CCHPs)

[1] The TCS shall utilize CCHPs to spread the EM component heat dissipation so as to increase the radiator efficiency, where necessary.

[2] The EM CCHPs shall conform to the performance specifications PS20008556 (EDM) and PS20008711 (Flight).

[3] Key CCHP requirements shall be:

Leakage Rate	$<1 \times 10^{-7}$ std cc/sec NH_3
Operating Temperature Range	–20° to +50°C
Non–op design Temperature Range	–40° to +60°C (105°C during panel bonding)

3.7.2.3 Heater Controller Electronics (HCEs)

[1] The TCS shall utilize HCEs to control components which require heater power to maintain minimum temperatures as described in Table III.

[2] The HCEs shall provide closed–loop, proportional or thermostatic control to maintain set–point temperatures on Spacecraft equipment, as shown in Table VII.

[3] Where heaters are required to control critical component temperatures, the heaters and associated controllers shall be functionally redundant.

Table VII. HCE Types/Function

Type	Static/ Proportional	Max Heater Power (W)	Description	Typical Usage
2	S	120.0	Soft turn on and off using a thermistor signal.	Operational, survival and start–up component heaters
3	P	60.0	Commandable, variable set–point with single thermistor input.	CPHTS Reservoirs
4	P	28.0	Powered from 28 V PM EPC source.	Propulsion Module Thruster Valves
5	P	240.0	Single set point with multi– thermistor inputs	Battery Cell heaters

[4] Normal Spacecraft thermal control shall not require ground command except for enabling of selected heaters.

[5] All automatic heaters shall be capable of being separately enabled and disabled by ground commands.

[6] The set–point temperature of select HCEs shall be programmable to predetermined set–points using ground commands.

[7] Heater types are described in 3.7.2.5.

[8] Thermistors shall be used as the temperature sensing element of the heater control assembly.

The HCEs shall conform to the performance specifications PS20008795 (Type 5), PS20008785 (Type 2), PS20008786 (Type 3), and PS20008787 (Type 4).

3.7.2.4 Multilayer Insulation

MLI blankets shall be used to reduce the radiative heat transfer to/from specified parts of the Spacecraft. The emittance of the outer layer shall not alter when properly protected from degradation and erosion. The standard Spacecraft blanket assembly shall consist of:

a. An outer layer of 2.0 mil single–sided aluminized Kapton (SAK).

b. Thirteen internal layers of 0.25 mil double–sided aluminized Mylar (DAM), each layer separated by Dacron mesh.

c. An inner layer of 2.0 mil SAK.

d. As required; thread, velcro and grounding method.

The MLI blankets shall be designed to the following performance requirements:

Through–emissivity	0.025 (nominal)
External Absorptivity (BOL)	0.40
External Absorptivity (EOL)	0.55 @ 5 years
External Emissivity	0.75

The baseline approach for creating blanket drawings, shall involve the use of Mylar templates directly from Spacecraft hardware.

3.7.2.5 Heaters

Heaters shall be flat foil type or the round wire type (for propulsion lines) with the size and electrical resistance determined by individual component requirements.

[1] Components requiring heaters are listed in Table III.

[2] Heaters shall be sized to provide a 25% margin over the expected heat input requirements.

The heaters shall conform to the performance specifications PS20008788 (Foil) and 3267289 (round wire).

3.7.2.6 Temperature Sensors

Temperature sensors consist of elements whose electrical resistance varies as a function of temperature. They provide component temperature monitoring for critical components (as shown in Appendix II) via the C&DH subsystem. Resistance shall be monitored using passive analog telemetry capabilities in the BDU.

The temperature sensors shall conform to the performance specifications PS20008790.

3.7.2.7 Thermistors

Thermistors consist of elements whose electrical resistance varies as a function of temperature. They provide temperature inputs for the HCEs (Types 2–5).

The thermistors shall conform to the performance specifications PS20008791.

3.7.2.8 Thermostats

Mechanically switched thermostats shall be used to provide heater control of propulsion module components (except the thruster control valve heaters), and heater control over/under temperature protection for HCE3– and HCE5– controlled components.

The thermostats shall conform to the performance specification PS20008789.

3.7.2.9 Thermal Coatings

[1] The TCS shall utilize the paints and coatings shown in Table VIII. Paint and coatings shall be selected such that they do not significantly hinder or prevent the removal or installation of fasteners.

[2] Thermal control coatings shall be non–degradable or degradation–limited to the extent that no Spacecraft contamination or thermal performance requirements will be violated due to coating degradation.

[3] Coating thermal properties shall account for the effects of expected contamination or degradation at End of Life.

Table VIII. Paints/Coatings and Typical Applications

Paint/Coating	Absorptivity BOL	EOL*	Emittance ε_n	Typical Application
Silver Teflon	0.10	0.25	0.79	EM/CPHTS radiators
S–13G/LO–1 White Paint	0.2	0.35	0.87	DAS Antenna, ESH, ...
Chemglaze Z306 Black Paint	0.91	0.91	0.9	Internal panels/ structure
Aluminized tape	n/a	n/a	0.11	Radiatively isolated components, EM Internal panels
Anodize (Black)	0.92	0.92	0.86	Radiatively coupled components

*EOL properties account for the effects of contamination and degradation.

3.7.3 TCS Flight Software Component Characteristics

This section specifies the software requirements for the TCS flight software, the portion of the EOS Spacecraft flight software supporting the thermal control subsystem.

[1] The TCS software shall be responsible for providing autonomous control of the TCS, where required, and monitoring functions.

[2] TCS flight software shall be written in accordance with the Software section of IS20008501.

[3] The TCS flight software shall have the capability of monitoring and controlling TCS components to the degree required to isolate faults, provide alerts for emergencies, and control equipment operation, as required.

[4] The flight software shall have the capability to be modified on–orbit. Such modification shall only be performed on a single copy of the on–board software at a given time, and be verified before modifications are performed on the next copy.

3.7.3.1 TCS Modes

The TCS flight software shall support operation of the TCS in all Spacecraft modes.

3.7.3.2 TCS Processes

The processes to be performed by the TCS flight software include:

TCS Fault Detection, Isolation, and Recovery
CPHTS Start–Up and Control
Transition to Survival Mode

3.7.3.2.1 TCS Fault Detection, Isolation, and Recovery (FDIR)

3.7.3.2.1.1 Process requirement

[1] The TCS FDIR shall have the capability of monitoring and controlling TCS components to the degree required to isolate faults, provide alerts for emergencies, and initiate recovery actions, if required.

3.7.3.2.2 CPHTS Reservoir Operational Heater Set–Point Temperature Changes

3.7.3.2.3 CPHTS Start–Up

3.7.3.2.3.1 Process Requirement

Flight software shall perform sequence of heater controller commands to start–up the CPHTS from quiescent conditions. The controlled start–up of the CPHTS shall be provided, following a predetermined timeline and/or dependent on specific temperature telemetry response.

3.7.3.2.4 Transition to Survival Mode

3.7.3.2.4.1 Process Requirement

Flight software shall perform sequence of commands to enable or disable the required HCEs for Survival mode operation.

3.7.3.3 External Software Interfaces

The TCS software shall be resident in the C&DH Spacecraft Control Computer (SCC).

(This page intentionally left blank.)

4 QUALITY ASSURANCE PROVISIONS

This section outlines the requirements and structure of a quality assurance program for the TCS. The purpose of the program is to demonstrate that the design of the TCS and its components meet the performance requirements, has been manufactured properly, and will operate as designed in association with all other Spacecraft interfaces. These tasks will be accomplished by conducting inspections, analyses, tests and/or performing functional demonstrations of the TCS hardware. Tests shall include mechanical and electrical functions in appropriate simulated environments that will verify expected component and subsystem requirements for handling and transportation, subsystem integration, ground test, launch, acquisition, and on–orbit operations.

The TCS design shall be reviewed in support of the Spacecraft Flight Assurance Review Program defined in the PAIP, Section 2, Assurance Review Requirements. Additional internal reviews at the skill center level shall include technical progress and problem resolution, cost and schedule, and subsystem and component preliminary and critical design reviews.

The basis for the TCS verification program implementation is the Spacecraft Verification Plan (VP), PN20005404, the Spacecraft Verification Specification (VS), PS20005404, and the Spacecraft Comprehensive Test Plan (CTP), PN20008664. The TCS verification program includes an engineering development effort designed to validate the appropriateness of the hardware design approach. Development includes the building and testing of component breadboards and engineering development models (EDM) of selected designs to verify circuit development, function evaluation, stability studies and interface performance. Development will not constitute verification, although data from development tests will be used to support verification activities.

A summary of the TCS development plan is presented in Table IX.

Table IX. TCS Development Plan

Component	Heritage	Breadboard/ Dev Test	Eng Dev Model	Life	Comment
CPHTS	New	TDM	EDM (1) EDM (2)	X	See Note 1
Power EM	New		X		See Note 2
Battery Cells	New		EDM		See Note 3
VCHP	New	X	part of TR EM EDM	X	Completed 9/92
CCHP	Series 5000		part of CPHTS EM EDM		
HCE	Series 7000 (mod)	X			QTM each type
Kinematic Mounts	New		KM EDM		Thermal conductance verification

Notes: 1 Technology Demonstration Model (TDM) testing completed 7/92
GSFC–Flight experiment (CAPL) will also provide micro–g performance data

2 Full scale Power EM EDM planned

3 Thermal testing using cells from the flight cell life evaluation test will be performed

4.1 TCS Verification

Each requirement of Section 3.2 and 3.3 of this specification shall be performed as defined in the Verification Matrix , which is attached separately under Attachment A.

4.1.1 Verification Phases

Phases shall be either Acceptance or Qualification as defined in PS20005404.

4.1.2 Verification Methods

The following methods shall be used as appropriate to verify each of the requirements in Sections 3.2 and 3.3: Demonstration, Test, Analysis, and/or Inspection. Each method shall be as defined in Section 6.

4.1.3 Responsibility for Verification

In general, the responsibility for verification of each requirement specified in Sections 3.2 and 3.3 is that of Astro Space.

4.1.4 Verification Conditions

[1] Each TCS component shall be exposed to verification conditions which represent those environments encountered throughout the ground phase and flight mission. The environmental conditions and levels of exposure are defined in the VS, PS20005404, Section 4.

[2] Supplemental air conditioned cooling shall be provided, as required, for thermal control during ambient tests.

4.2 Testing

4.2.1 Reliability Testing

Reliability verification shall form a major part of the TCS verification program. Requirements and responsibility for reliability verification are found in Section 7, Design Assurance and Reliability Plan, of the PAIP, PN20005397. TCS component designers have primary responsibility for conducting Parts and Devices Stress Analysis (PAIP, 7.2.2.5), Worst–Case Analysis (PAIP, 7.2.2.6) and Trend Analysis (PAIP, 7.2.2.7). Secondary responsibility as defined in PAIP, Section 7, includes but is not limited to Failure Mode and Effects Analysis (PAIP, 7.2.2.2), Reliability Assessment (PAIP, 7.2.2.4) and identification of limited life items (PAIP, 7.2.2.8). All test data is to be collected, documented and used in support of the TCS reliability analysis conducted by Reliability Engineering. All testing shall be performed within the guidelines of the System Safety Plan outlined in Section 4 of the PAIP, PN20005397.

4.2.2 Engineering Evaluation and Test Requirements

4.2.2.1 Performance Tests

The TCS, its components, and all development models/breadboards, where applicable, shall be subjected to the performance tests defined in the Verification Specification, PS20005404. Performance tests include Subsystem Integration Tests, Electrical Interface Tests, (or sometimes

referred to as Interface Verification Test (IVT)), Comprehensive Performance Test (CPT), and Functional Performance Test. These tests and their applicability in the verification plan are at the discretion of the test designer as defined in the Comprehensive Test Plan for the EOS–AM Spacecraft, PN20008664.

4.2.2.2 Verification Tests

Each TCS component shall be subjected to the verification tests defined in VP, PN20005404, Section 4. Performance tests, as defined above in 4.2.2.1, shall be performed during verification tests to demonstrate functionality during a flight environment.

4.2.3 Protoflight Testing

Acceptance testing shall be performed on TCS protoflight components to verify workmanship and functionality, as described in the VP, PN20005404. The protoflight test levels are defined in VS, PS20005404, Section 4.

4.2.4 Acceptance Testing

Acceptance testing shall be performed on all TCS flight components to verify workmanship and functionality, as described in the VP, PN20005404. The acceptance test levels are defined in VS, PS20005404, Section 4.

4.2.5 Qualification Testing

Qualification testing of QTM and protoflight components shall be used to demonstrate adequacy of design limits. The qualification test levels are defined in VS 20005404, Figure 1, Comparison of Thermal Test Levels and Figure 2, Comparison of Vibro–acoustic Test Levels and Durations. The delta values shown in these figures are to be applied to the acceptance levels defined in the VS, PS20005404, Section 4.

4.2.6 Installation Testing, and Checkout

4.2.6.1 Leak Checking

The CPHTS and heat pipes will be leak checked, as per **(TBD–6)**

4.2.6.2 Heater Functionality

Continuity testing of all HCEs and heaters shall occur after final assembly in I&T and prior to TV/TB testing.

4.2.6.3 Temperature Sensor & Thermistor Functionality

All thermistors shall be touch tested at installation to demonstrate reasonable response.

4.2.6.4 MLI Blanket Continuity Testing

MLI Blanket grounding shall be tested at the completion of a given blanket installation.

4.3 Special TCS Verifications

4.3.1 Heater Dissipation

During S/C TV/TB provision shall be made to quantify heater power consumption for each separately controlled heater circuit.

4.4 Test Equipment

[1] Existing test equipment shall be used wherever practical.

[2] Where new test equipment is required to test units which are physically or functionally identical or similar, the equipment shall be designed to perform its task(s) on each element of that group, where practical.

4.4.1 Test Equipment Safety Features

[1] Test equipment shall incorporate any safety interlocks or other safety features necessary to reduce the introduction of safety hazards by the test equipment.

[2] Any safety feature included in any Spacecraft test equipment shall give a visual, auditory, or electronic indication of activation when it is activated.

4.4.2 Test Equipment Verification

Unless otherwise specified herein, test equipment used to measure TCS performance characteristics shall be capable of demonstrating that:

a. It will not impose environments on the tested item(s) beyond the levels called for in the Verification Specification, PS20005404.

b. It is capable of imposing the test levels called for in the Verification Specification, PS20005404.

4.4.3 Test Equipment Calibration

Test equipment shall be calibrated in accordance with GSFC 420–05–02.

4.5 Verification Documentation

The subsystem verification activities shall be documented in:

a. Verification Reports as defined in PS20005404.

b. Test procedures

c. Test logs

d. Test Review Board meeting minutes

e. Analysis Reports

f. Failure Analysis

g. Thermal Math Models (SEP–110)

Test tolerances shall be per Table VI of PS20005404.

4.6 Responsibility for Verification

[1] Astro Space shall verify each requirement specified in Sections 3.2 and 3.3 of this document.

[2] Attachment A, Verification Matrix (provided under separate cover) identifies the required method(s) of verification and the recommended phase of verification for each Section 3 requirement. Also identified is at what level of the equipment development cycle the verification is accomplished.

(This page intentionally left blank.)

5 PREPARATION FOR DELIVERY

5.1 General

Unless otherwise specified in the contract or purchase order, units procured to this specification shall be packaged, packed, and marked for shipment as specified herein.

5.2 Marking

Each unit container and shipping container shall be labeled, tagged, or marked to show at least the following unless otherwise noted: item name, part number, contract or purchase order number, supplier's name or code number, serial number (unit container only), quantity, date of manufacture (unit container only), and "Fragile – Handle With Care."

5.3 Packing

Packing for shipment shall be in accordance with the procedures for the shipping container configuration approved by Astro Space.

(This page intentionally left blank.)

6 NOTES

6.1 Definitions

6.1.1 Inspection (I)

Inspection is a method of verification of physical characteristics that determines compliance without the use of special laboratory equipment procedures, test support items, or services. Inspection uses standard methods such as visual gauges, etc., to verify compliance with design documentation requirements.

Inspection also includes the inspection of design documents, material lists, code, plans, etc., to verify the requirements have been met.

Inspection of the TCS will confirm the integrity and cleanliness of thermal coatings; confirm the weight of the TCS components is within the allocated weight budget; confirm the expected configuration of the TCS components; and confirm the completeness of test data logs.

6.1.2 Analysis/Similarity (A)

Analysis is a verification method utilizing techniques and tools such as math models, prior test data, simulations, or analytical assessments.

Verification by a similarity analysis is acceptable if the subject article is similar or identical in design, manufacturing process, and quality control to another article that has been previously verified to equivalent or more stringent criteria.

Reliability analyses shall be carried out for the TCS to confirm a probability of success at or above the allocated value.

Detailed and top–level thermal analyses shall be carried out using thermal mathematical models to predict Spacecraft thermal performance.

6.1.3 Demonstration (D)

Demonstration is a qualitative method of verification that evaluates the properties of the subject equipment by observation. Demonstration is used with or without special test equipment or instrumentation to verify required characteristics such as operational functioning, human engineering features, services and access features, transportability, and displayed date.

6.1.4 Test (T)

Test is a method of verification wherein performance requirements are verified by measurement during or after the controlled application of functional and environmental stimuli. These measurements may require the use of laboratory equipment, recorded data, procedures, test support items, or services.

6.2 Abbreviations And Acronyms

Assy	Assembly
BDU	Bus Data Unit
BOL	Beginning of Life
C	Celsius
cc	cubic centimeters
CCHP	Constant Conductance Heat Pipe
C&DH	Command and Data Handling
CEI	Contract End Item
CPHTS	Capillary Pumped Heat Transport System
CPT	Comprehensive Performance Test
D	Diameter
DAM	Double sided aluminized Mylar
dc	direct current
EAS	Electrical Accommodation Subsystem
EDM	Engineering Development Model
ELV	Expendable Launch Vehicle
EOL	End of Life
EOS	Earth Observing System
EM	Equipment Module
EMC	Electromagnetic Compatibility
EMI	Electromagnetic Interference
EPS	Electrical Power Subsystem
ESD	Electrostatic Discharge
FDV	Fill and Drain Valve
FMEA	Failure Modes and Effects
FOV	Field of View
g	Acceleration of Gravity
GFE	Government Furnished Equipment
GN&C	Guidance, Navigation, and Control
GSE	Ground Support Equipment
HCE	Heater Control Electronics

HGA	High Gain Antenna
HPHX	Heat Pipe Heat Exchanger
HVCHP	Hairpin–shaped VCHP
I	Inspection
IC	Interface Connector
ICD	Interface Control Document
IF	Interface
IVT	Interface Verification Test
LVCHP	L–shaped VCHP
MLI	Multilayer Insulation
NA	Not Applicable
NCG	Noncondensible Gas
NH_3	Ammonia
N_2H_4	Hydrazine
OD	Outside Diameter
OSR	Optical Solar Reflector
PAIP	Product Assurance Implementation Plan
PAPL	Program Approved Parts List
PAR	Product Assurance Requirement
PROPS	Propulsion Subsystem
Ps	Probability of Success
psi	Pounds per Square Inch
RD	Requirements Document
RWA	Reaction Wheel Assembly
SA	Solar Array
SAD	Solar Array Drive
SAK	Single Aluminized Kapton
SCC	Spacecraft Control Computer
SSU	Sequential Shunt Unit
T	Temperature
TBD	To Be Determined
TBR	To Be Reviewed

TCS	Thermal Control Subsystem
TLM	Telemetry
UIID	Unique Instrument Interface Document
VCHP	Variable Conductance Heat Pipe
VP	Verification Plan
VS	Verification Specification

6.3 Exceptions to the GIS and GIIS

6.4 Requirements Traceability Matrix

Requirements in Section 3 of this specification were derived from the source documents shown in the Requirements Traceability Matrix, Attachment B (provided under separate cover).

APPENDIX I

10 COMMAND REQUIREMENTS

The commands necessary to operate the TCS heaters are defined in the following listing.

Item/Operation	Function	Type	Quantity	Comments
ASTER HCEs	Enable	Relay	12	Individual HCEs ganged to reduce overall # of commands
ASTER HCEs	Disable	Relay	38	Individual disable commands per HCE
ASTER CPHTS Tset	Enable	Relay	8	Variable Temp set point
ASTER CPHTS Tset	Disable	Relay	8	Variable Temp set point
MOPITT HCEs	Enable	Relay	4	Individual HCEs ganged to reduce overall # of commands
MOPITT HCEs	Disable	Relay	18	Individual disable commands per HCE
MOPITT CPHTS Tset	Enable	Relay	4	Variable Temp set point
MOPITT CPHTS Tset	Disable	Relay	4	Variable Temp set point
MODIS HCEs	Enable	Relay	2	
MODIS HCEs	Disable	Relay	2	
PM HCEs	Enable	Relay	8	Individual HCEs ganged to reduce overall # of commands
PM HCEs	Disable	Relay	32	Individual disable commands per HCE
PM Heaters (Tstat control)	Enable	Relay	36	
PM Heaters (Tstat control)	Disable	Relay	36	
Comm/C&DH EM HCEs	Enable	Relay	18	
Comm/C&DH EM HCEs	Disable	Relay	18	
DAS EM HCEs	Enable	Relay	8	
DAS EM HCEs	Disable	Relay	8	
GN&C EM HCEs	Enable	Relay	12	
GN&C EM HCEs	Disable	Relay	12	
Power EM HCEs	Enable	Relay	10 (TBR–4)	
Power EM HCEs	Disable	Relay	10 (TBR–4)	

(This page intentionally left blank.)

APPENDIX II

20 TELEMETRY REQUIREMENTS

The following measurements/signals listed in Table X shall be transmitted to the Ground Control Station and the EOS Control Station for evaluation and to aid in monitoring the TCS performance.

Table X. TCS Telemetry List

Item/Operation[1]	Function	Quantity
ASTER HCE	Relay Status Telemetry	25
ASTER CPHTS Temperature Setpoint	Relay Status Telemetry	8
ASTER Pressure Switch	Status Telemetry	8
MOPITT Pressure Switch	Status Telemetry	2
MOPITT HCE	Relay Status Telemetry	11
MOPITT CPHTS Temperature Setpoint	Relay Status Telemetry	4
MODIS HCE	Relay Status Telemetry	2
PM HCE	Relay Status Telemetry	20
PM Heater Status	Relay Status Telemetry	36
Comm/C&DH EM HCE	Relay Status Telemetry	18
DAS EM HCE	Relay Status Telemetry	8
GN&C EM HCE	Relay Status Telemetry	12
Power EM HCE	Relay Status Telemetry	10
Recorder EM HCE	Relay Status Telemetry	12
ASTER Accommodation Equipment	Temperature Telemetry	76
MOPITT Accommodation Equipment	Temperature Telemetry	45
Propulsion Module	Temperature Telemetry	73
Comm/C&DH EM	Temperature Telemetry	46
DAS EM	Temperature Telemetry	20
Sensor EM	Temperature Telemetry	22
Power EM	Temperature Telemetry	30
RWA EM	Temperature Telemetry	14
Recorder EM	Temperature Telemetry	17

Note: 1 Organized by BDU through which telemetry is handled

(This page intentionally left blank.)

APPENDIX III

30 HOUSEKEEPING EQUIPMENT TEMPERATURE REQUIREMENTS

The temperature limits of the housekeeping equipment are contained in Table XI. Definitions for each temperature category are provided in the following paragraphs.

30.1 Qualification Temperature Limits

Qualification temperature limits represent the extreme temperatures at which the component will still operate without loss of function; normally 10°C outside of maximum allowable temperature predictions. All prototype (QTMs) and protoflight components will be tested to qualification temperature limits.

30.2 Acceptance Temperature Limits

Acceptance temperature limits represent temperature extremes 5°C within the qualification temperature extremes, and 5°C outside of the maximum allowable temperature predictions. All flight components will be tested to acceptance temperature limits.

30.3 Design Range Temperature Limits

Design Range temperature limits represent the maximum and minimum temperatures which the Platform design requires for reliable operation of components. Design range temperature limits represent the maximum and minimum extremes allowed for a component while it is operating on orbit. Thermal temperature predictions should not exceed the design range temperature limits, which are 5°C within the acceptance temperature extremes and 10°C within the qualification temperature extremes.

30.4 Non–operational Temperature Limits

Non–operational temperature limits represent the maximum and minimum extremes allowed for a component while it is nonoperating. Temperature predictions for the non–operating components should not exceed the non–operational temperature extremes.

30.5 Non–operational Acceptance Temperature Limits

Non–operational temperature limits represent the temperature extremes 5°C within the non–operational qualification temperature extremes, and 5°C outside of the non–operational design temperature predictions. All flight components will be tested to non–operational acceptance temperature limits (while non–operational).

30.6 Non–operational Qualification Temperature Limits

Non–operational qualification temperature limits represent the temperature extreme temperature to which a component may be exposed without incurring damage. The non–operational qualification temperature extremes are 10°C outside the maximum allowable temperature predictions for the non–operating components. All prototype and protoflight components will be tested to non–operational qualification temperature limits (while non–operational).

30.7 Turn–On Temperature Limits

Allowable, on–orbit turn–on limits represent the maximum and minimum temperature extremes at which turn–on of equipment from a non–operational to an operational state is allowed on orbit.

Table XI. Platform Housekeeping Component Temperature Requirements

	Temperature Limits (°C)			
Subsystem/Unit	Operating Qual Min/Max	Operating Accept Min/Max	Operating Design Min/Max	NonOp Design Min/Max
C&DH:				
Spacecraft Controls Computer	–20/60	–15/55	–10/50	–25/60
CMD/TLM I/F Unit (CTIU)	–20/60	–15/55	–10/50	–25/60
Bus Data Unit (BDU)–Housekeeping	–20/60	–15/55	–10/50	–25/60
Bus Data Unit –Instruments	–20/60	–15/55	–10/50	–25/60
Science Formatting Equipment (SFE)	–20/60	–15/55	–10/50	–25/60
Solid State Recorder Data Control Unit	–20/60	–15/55	–10/50	–25/60
Solid State Recorder Data Memory Unit	–20/60	–15/55	–10/50	–25/60
GN&C:				
Magnetic Torque Rods	–20/60	–15/55	–10/50	–25/60
Reaction Wheel Assy (RWA)	–20/60	–15/55	–10/50	–25/60
Earth Sensor Head	–25/50	–15/40	–10/35	–35/55
Coarse Sun Sensor	–105/100	–100/95	–95/90	–110/100
Fine Sun Sensor Head	–20/60	–15/55	–10/50	–25/60
Star Tracker	–20/50	–15/45	–10/40	–24/50
Magnetometer (Elex & Sensor)	–20/60	–15/55	–10/50	–25/60
Inertial Reference Unit (IRU)	0/50	5/45	10/40	–10/50
Attitude Control Electronics (ACE)	–20/60	–15/55	–10/50	–25/60
Earth Sensor Electronics	–25/50	–15/40	–10/35	–25/60
Fine Sun Sensor Electronics	–20/60	–15/55	–10/50	
EPS:				
Batt Power Conditioner (BPC)	–20/60	–15/55	–10/50	–25/80
Battery	–10/30	–10/30	–5/10	–20/50
Power Distribution Unit (PDU)	–20/60	–15/55	–10/50	–25/60
Fuse & Distribution Box (FDB)	–20/60	–15/55	–10/50	–25/60
Elec. Power Conditioner	–20/70	–15/65	–10/60	–25/60
Solar Array	–105/110	–100/105	–95/100	(TBD–7)
Array Drive Electronics	–20/60	–15/55	–10/50	–25/60
Sequential Shunt Unit	–25/65	–20/60	–15/55	–35/80
Power Switching Unit	–20/60	–15/55	–10/50	–25/60

Table XL Platform Housekeeping Component Temperature Requirements (Continued)

	Temperature Limits (°C)			
Subsystem/Unit	Operating Qual Min/Max	Operating Accept Min/Max	Operating Design Min/Max	NonOp Design Min/Max
TCS:				
CPHTS Coldplate	–55/50	–50/45	–45/40	–55/40
Pressure Switch	–70/50	–65/45	–60/40	–70/50
CPHTS Fluid Reservoir	–35/50	–30/45	–25/40	–35/50
CPHTS Heat Pipe Heat Exchanger	–65/50	–60/45	–55/40	–65/105
CPHTS Const. Cond. Heat Pipe (CCHP)	–70/40	–65/35	–60/30	–70/105
CPHTS NCG Trap	–70/50	–65/45	–60/40	–70/105
CPHTS Fill/Drain Valve	–70/50	–65/45	–60/40	–70/50
EM Const. Cond. Heat Pipe (CCHP)	–35/60	–25/55	–20/50	–40/105
Heater Control Electronics	–34/71	–29/66	–24/61	–34/71
MLI	–110/110	–105/105	–100/100	N/A
COMS:				
S–Band Omni Antenna (SOA)	–95/130	–90/125	–85/120	–100/130
S–Band I/F Unit (SBIU)	–20/60	–15/55	–10/50	–25/60
S–Band Transponder (SBT)	–20/60	–15/55	–10/50	–25/60
Band Reject Filter (BRF)	–20/60	–15/55	–10/50	–25/60
KSA Modulator	–20/60	–15/55	–10/50	–25/60
Master Oscil (MO)	–20/60	–15/55	–10/50	–25/60
HGA	N/A	N/A	N/A	N/A
X–Band Earth Coverage Antenna	–95/100	–90/105	–85/90	–100/100
DAS RF Power Amp	–20/60	–15/55	–10/50	–25/60
DAS Upconverter	–20/60	–15/55	–10/50	–25/60
DAS Modulator	–20/60	–15/55	–10/50	–25/60
WG Switch	–20/60	–15/55	–10/50	–25/60
DAS Filter Assembly	–20/60	–15/55	–10/50	–25/60
ELECTRICAL ACCOMMODATION:				
Harnesses	N/A	N/A	–5/50	–25/60
Pyrotechnic Relay Assy	–15/60	–10/55	–5/50	–25/60
STRUCTURE/MECHANISMS:				
Solar Array Drive (SAD)	–34/71	–29/66	–24/61	N/A
HGA Deployment System	–20/60	–15/55	–10/50	–50/70
Spacecraft Structure	N/A	N/A	–30/50	–60/70
PROPS				
N_2H_4 Propellant Tank	10/60	N/A	10/50	N/A

Table XI. Platform Housekeeping Component Temperature Requirements (Continued)

	Temperature Limits (°C)			
Subsystem/Unit	Operating Qual Min/Max	Operating Accept Min/Max	Operating Design Min/Max	NonOp Design Min/Max
Thrusters	10/65	N/A	10/50	N/A
Propellant Valves	10/65	N/A	10/50	N/A
Low Pressure Service Pressurant Valves	10/60	N/A	10/50	N/A
Low Pressure Transducers	10/60	10/55	10/50	N/A
Propellant Filters	10/60	N/A	10/50	N/A
Electronics (PMEA)	–20/60	–15/55	–10/50	–25/60

PS20004937
CAGE No. 49671
21 July 1993

Performance Specification
Guidance, Navigation and Control (GN&C) Subsystem
EOS–AM Spacecraft
(SP–601)

Prepared under:
Contract NAS5–32500
NASA Goddard Space Flight Center
Greenbelt, Maryland 20771

Prepared by:
Martin Marietta Corporation
Astro Space
P.O. Box 800
Princeton, New Jersey 08543–0800

DCC072193

(This page intentionally left blank.)

REVISION LOG

This log identifies those portions of this document which have been revised since the original issue. Revised portions of each page, for the current revision only, are identified by marginal striping.

Revision	Paragraph Number(s) Affected	Rev. Date	Approval
Initial Issue		07/21/93	CM/GSR

(This page intentionally left blank.)

TABLE OF CONTENTS

SECTION / PARAGRAPH	TITLE	PAGE
1	SCOPE	1
2	APPLICABLE DOCUMENTS	3
2.1	Government Documents	3
2.1.1	NASA Documents	3
2.1.2	Military Documents	3
2.1.3	Other Government Documents	3
2.2	Non–Government Documents	3
2.2.1	Martin Marietta Astro Space Documents	4
2.2.2	Subcontractor Documents	5
2.2.3	Other Non–Government Documents	5
3	REQUIREMENTS	7
3.1	Subsystem Definition	7
3.1.1	Item Diagrams	7
3.1.2	Interface Definition	7
3.1.2.1	Functional Interfaces	7
3.1.2.2	Physical Interfaces	7
3.1.2.3	Subsystem Interfaces	17
3.1.2.4	Ground System Interfaces with TONS	26
3.1.3	Major Component List	28
3.2	Characteristics	28
3.2.1	Guidance, Attitude Determination, and Control	28
3.2.1.1	Coordinate Systems	29
3.2.1.2	Orbital Parameters	32
3.2.1.3	Guidance, Navigation, and Control Modes	33
3.2.1.4	Attitude Determination and Control Performance	40
3.2.1.5	Appendage Control Performance	44
3.2.1.6	Momentum Unloading Performance	45
3.2.1.7	Navigation Performance	45

TABLE OF CONTENTS (Continued)

SECTION / PARAGRAPH	TITLE	PAGE
3.2.1.8	Failure Detection/Correction	47
3.2.1.9	GN&C Commands	49
3.2.1.10	GN&C Telemetry	49
3.2.1.11	Ancillary Data Generation	50
3.2.2	Operational Modes	51
3.2.3	Physical Characteristics	52
3.2.3.1	Mass	52
3.2.3.2	Durability	52
3.2.3.3	Layout and Dimensions	52
3.2.3.4	Maintainability and Impact on Design	52
3.2.3.5	Handling Features	52
3.2.4	Power Characteristics	52
3.2.5	Power Usage	53
3.2.5.1	Power Exclusion Rules	53
3.2.6	Reliability	53
3.2.6.1	Storage Restrictions	53
3.2.6.2	Vulnerability Factors	53
3.2.6.3	Failure Tolerance	53
3.2.6.4	Failure Propagation Restrictions	54
3.2.7	Environmental Conditions	54
3.2.7.1	Storage, Integration and Test	54
3.2.7.2	Shipment	54
3.2.7.3	Launch	55
3.2.7.4	On–Orbit	55
3.2.7.5	Electromagnetic Radiation	56
3.3	Design and Construction	56
3.3.1	Materials, Processes, Parts and Finishes	56
3.3.2	Nameplates and Product Marking	56
3.3.3	Workmanship	56
3.3.4	Interchangeability	56

TABLE OF CONTENTS (Continued)

SECTION / PARAGRAPH	TITLE	PAGE
3.3.5	Safety	56
3.3.5.1	General	57
3.3.5.2	Automatic Hazard Detection and Safing	57
3.3.5.3	Safety Interlock Mechanisms/Techniques	57
3.3.5.4	Liquids and Gasses	57
3.3.5.5	Pressurized Vessels	57
3.4	Documentation	57
3.4.1	Specifications	57
3.4.2	Drawings	57
3.4.3	Technical Manuals	57
3.4.4	Test Plans	57
3.4.5	Procedures	58
3.4.6	Installation Instructions	58
3.4.7	Operational Documentation	58
3.4.8	Software Documentation	58
3.5	Logistics	58
3.5.1	Maintenance	58
3.5.2	Supply	58
3.6	Precedence	58
3.6.1	Precedence of Design Criteria	58
3.6.2	Documentation Precedence	59
3.7	Major Component Characteristics	59
3.7.1	Allocations	59
3.7.2	Flight Hardware Component Characteristics	60
3.7.2.1	Attitude Control Electronics (ACE)	60
3.7.2.2	Coarse Sun Sensor (CSS)	65
3.7.2.3	Earth Sensor Assembly (ESA)	66
3.7.2.4	Fine Sun Sensor (FSS)	67
3.7.2.5	Inertial Reference Unit (IRU)	67
3.7.2.6	Magnetic Torquer Rod (MTR)	69

TABLE OF CONTENTS (Continued)

SECTION / PARAGRAPH	TITLE	PAGE
3.7.2.7	Reaction Wheel Assembly (RWA)	69
3.7.2.8	Solid State Star Tracker (SSST)	70
3.7.2.9	Three–Axis Magnetometer (TAM)	71
3.7.3	Guidance, Navigation, and Control (GN&C) Subsystem Software Requirements	72
3.7.3.1	GN&C Software External Interfaces	72
3.7.3.2	Attitude Determination and Control (ADAC) Software	73
3.7.3.3	Navigation Software	98
4	REQUIREMENTS TRACEABILITY/VERIFICATION	107
4.1	GN&CS Verification	107
4.1.1	Verification Phases	107
4.1.2	Verification Methods	107
4.1.3	Responsibility for Verification	107
4.1.4	Verification Conditions	107
4.2	Testing	107
4.2.1	Reliability Testing	107
4.2.2	Engineering Evaluation and Test Requirements	108
4.2.2.1	Test Flows	108
4.2.2.2	Performance Tests	108
4.2.2.3	Verification Tests	109
4.2.3	Acceptance Testing	109
4.2.4	Qualification Testing	109
4.2.5	Installation and Checkout	109
4.3	Special Verifications	109
4.4	Test Equipment	109
4.4.1	Test Equipment Safety Features	109
4.4.2	Test Equipment Verification	110
4.4.3	Test Equipment Calibration	110
4.5	Verification Documentation	110
5	PREPARATION FOR DELIVERY	111

TABLE OF CONTENTS (Continued)

SECTION / PARAGRAPH	TITLE	PAGE
6	NOTES	113
6.1	Definitions	113
6.2	Abbreviations and Acronyms	113
6.3	Exceptions to the GIS and GIIS	114
6.4	Requirements Traceability Matrix	114

APPENDIX I

10	COMMANDS AND TELEMETRY REQUIREMENTS	115
10.1	Guidance, Navigation, and Control (GN&C) Command List	115
10.2	Telemetry Table Header Definition	118
10.3	Guidance, Navigation and Control Subsystem Telemetry Estimates	119
10.3.1	Attitude Control Electronics (ACE)	119
10.3.2	Earth Sensor Telemetry	120
10.3.3	Reaction Wheel Assembly Telemetry	121
10.3.4	Inertial Reference Unit Telemetry	121
10.3.5	Star Tracker Telemetry	122
10.3.6	Three Axis Magnetometer (TAM) Telemetry	122
10.3.7	Magnetic Torque Rods (MTR) Telemetry	122
10.3.8	Body–mounted Coarse Sun Sensor (CSS) Telemetry	123
10.3.9	Fine Sun Sensor (FSS) Telemetry	123
10.3.10	Power Switching Unit (PSU)	124

LIST OF FIGURES

FIGURE	TITLE	PAGE
1	GN&CS Functional Block Diagram	8
2	GN&CS Flight Software Functional Block Diagram	9
3	GN&CS Electrical Interfaces	10
4	Data Collection Paths—All Non–Safe–Modes Combined	21
5	Control Distribution Paths—All Non–Safe–Modes Combined	22
6	Orbit Coordinate Systems	30
7	EOS Spacecraft Coordinate System	31
8	Typical Component Verification Flow	108

LIST OF TABLES

TABLE	TITLE	PAGE
I	GN&CS External Interfaces	11
II	GN&CS Functional Interfaces	13
III	Spacecraft Phase Inertia Matrix	24
IV	Major Component List	28
V	Operational Phase Orbit	33
VI	Injection Orbit	33
VII	GN&CS Sensor and Effector Utilization	34
VIII	Mission Phase vs EOS Spacecraft Mode vs GN&C Mode	51
IX	Power Resource Allocation	53
X	Component Requirement Allocations	59
XI	ACE Modes and Functions	61
XII	C&DHS Traffic Allocation to Collect Measurement Data for GN&C Flight Software	74
XIII	C&DHS Traffic Allocation to Distribute Commands for GN&C Flight Software	77

TBD LOG

ITEM	SECTION	PAGE	SUBJECT	RESP.	DUE
TBD–1	3.7.2.1.9	64	ACE SHDP processing accuracy	GN&C	ACE CDR
TBD–2	3.7.2.8.3	71	SSST timing	GN&C	GN&C CDR
TBD–3	3.7.2.8.3	71	SSST timing	GN&C	GN&C CDR
TBD–4	3.7.3.2.2	79	FSS measurement accuracy	GN&C	GN&C CDR

TBR LOG

ITEM	SECTION	PAGE	SUBJECT	RESP.	DUE
TBR–1	3.1.2.3.1.1	17	Solar array properties	R. Kimber	SA CDR
TBR–2	3.1.2.3.1.1	17	Solar array properties	R. Kimber	SA CDR
TBR–3	3.1.2.3.1.1	18	Solar array properties	R. Kimber	SA CDR
TBR–4	3.1.2.3.1.1	18	Solar array thermal snap	SE&I	GN&C CDR
TBR–5	3.1.2.3.1.1	18	SADE drive rates	D. Cobb	SADE CDR
TBR–6	3.1.2.3.3.1.2	19	HGA moments of inertia	A. DeLessio	HGA CDR
TBR–7	3.2.1.3.5	40	ACS activation time delay	SE&I	GN&C CDR
TBR–8	3.2.1.4.4	43	Transition time from sun to Earth pointing	GN&C	GN&C CDR
TBR–9	3.2.6	53	Subsystem probability of success allocation	SE&I	S/C CDR

(This page intentionally left blank.)

1 SCOPE

This specification establishes the performance, design, and test requirements for the Guidance, Navigation and Control Subsystem (GN&CS) of the Earth Observing System (EOS) Spacecraft. These requirements are derived from the Contract End Item Specification, PS20005396.

(This page intentionally left blank.)

2 APPLICABLE DOCUMENTS

2.1 Government Documents

The following documents of the exact issue shown shall form a part of this specification to the extent specified herein. In the event of a conflict between the documents referenced below, this document shall take precedence except as defined in Section 3.6 herein.

2.1.1 NASA Documents

420–03–02 1 December 1992	General Instrument Interface Specification
NASA–STDN–101.2	Space Network Users Guide
NHB 5300.4 (3A–1) December 1976	Requirements for Soldered Electrical Connections, Change 1
NHB 5300.4 (3G) April 1985	Requirements for Interconnecting Cables, Harnesses, and Wiring
NHB 5300.4 (3H) May 1984	Requirements for Crimping and Wire Wrap
NHB 5300.4 (3I) May 1984	Requirements for Printed Wiring Boards
NHB 5300.4 (3J) April 1985	Requirements for Conformal Coating and Staking of Printed Wiring Boards and Electronic Assemblies
NHB 5300.4 (3K) January 1986	Requirements for Rigid Printed Wiring Boards and Assemblies

2.1.2 Military Documents

MIL–STD–490A 04 June 1985	Specification Practices
WSMCR–127–1 December 1989	Western Space and Missile Center Range Safety Regulations,

2.1.3 Other Government Documents

None

2.2 Non–Government Documents

The following documents, of the latest issue shown, form a part of this specification to the extent specified herein. In event of conflict between the documents referenced herein and the contents of this specification, the contents of this specification shall be considered a superseding requirement, except for higher–tier documents.

2.2.1 Martin Marietta Astro Space Documents

PS20001407	GN&C Sensor Equipment Module, SP–801
PS20001409	RWA Equipment Module, SP–801
PS20001423	Reaction Wheel Assembly (RWA), SP–602
PS20003823	Inertial Reference Unit (IRU), SP–602
PS20003825	Three–Axis Magnetometer (TAM), SP–602
PS20034900	Attitude Control Electronics (ACE), SP–602
PS20003827	Earth Sensor Assembly (ESA), SP–602
PS20003828	Fine Sun Sensor (FSS), SP–602
PS20003829	Magnetic Torque Rod (MTR), SP–602
PS20003830	Solid–State Star Tracker (SSST), SP–602
PS20008602	Array Drive Electronics (ADE), SP–502
IS20004937	Guidance Navigation and Control Subsystem Interface Control Document
PS20005396	EOS–AM Platform Contract End Item Specification, September–101
20005397	Product Assurance Implementation Plan, PA–100
PN20005404	Verification Plan for the Earth Observing System VRD–100
PS20005404	Verification Specification for the Earth Observing System, VRD–110
PN20005869	Electromagnetic Compatibility (EMC) Control Plan September–106
IS20008501	General Interface Specification for the Earth Observing System, ICD–101
IS20008503	Launch Vehicle IRD, ICD103
PS20008513	High Gain Antenna (HGA)
20008536	EOS–AM Spacecraft Specification Tree
PS20008543	Master Oscillator

PS20008584	S–Band Transponder, SP–402
PS20008618	Propulsion Module Performance Specification, SP–702
PS20008619	Propulsion Module Electronics Assembly Specification, SP–701
MICD20008618	Propulsion Module Mechanical Interface Control Document
20008650	Program Approved Materials and Processes List, PA–460
20008652	Critical Items List, PA–510
20008658	Software Management Plan, MD–108
20005387	Configuration Management Plan, MD–104
PS20008662	Flight Software Systems Specification
PS20008669	Coarse Sun Sensor (CSS), SP–602
IS20008669	Interface Control Document, Coarse Sun Sensor (CSS)
IS20008504	EOS Spacecraft to TDRSS Interface Control Document, ICD–110
Source:	Martin Marietta Astro Space P. O. Box 800 Princeton, NJ 08543–0800

2.2.2 Subcontractor Documents

None

2.2.3 Other Non–Government Documents

None

(This page intentionally left blank.)

3 REQUIREMENTS

The GN&CS shall meet all the performance requirements specified herein.

3.1 Subsystem Definition

The GN&CS is an ensemble of sensors, effectors, software, and support hardware, which have the following functions. The GN&CS controls the Spacecraft attitude and orbit, following separation from the launch vehicle. In addition to controlling Spacecraft motion relative to the earth, the GN&CS controls the motions of the Solar Array and the High Gain Antenna relative to the Spacecraft. The GN&CS controls propulsive maneuvers for orbit adjustment and maintenance, and it controls attitude maneuvers for sensor calibrations.

The GN&CS includes not only redundant hardware, but also dedicated backup hardware and software which the GN&CS invokes autonomously upon detecting dangerous faults associated with Spacecraft attitude.

The GN&CS navigates the Spacecraft, and provides to other subsystems estimates of Spacecraft position, velocity, attitude, and master oscillator integrated normalized frequency error.

3.1.1 Item Diagrams

The GN&C Subsystem functional block diagram, the GN&C Flight Software functional block diagram and the GN&C electrical interfaces are shown in Figures 1, 2, and 3.

3.1.2 Interface Definition

All GN&CS components shall, where practical, utilize the standard interfaces defined in IS20008501 (the GIS). Exceptions to this shall be explicitly noted in the component specifications.

The GN&CS interfaces with other subsystems shall be controlled by the documents listed in Table I.

3.1.2.1 Functional Interfaces

Similar functional interfaces shall be standardized.

Table II summarizes the GN&CS functional interfaces with other subsystems.

3.1.2.2 Physical Interfaces

Similar physical interfaces shall be standardized.

3.1.2.2.1 Electrical Interfaces

The GN&C shall, where practical, comply with the requirements of the GIS, IS200020008501, Section 3, regarding Power, Grounds, Standard Signal Interfaces, Electro–explosive devices, Test Points, and Connectors and Pin Allocations. Exceptions to this shall be explicitly noted in the component specifications.

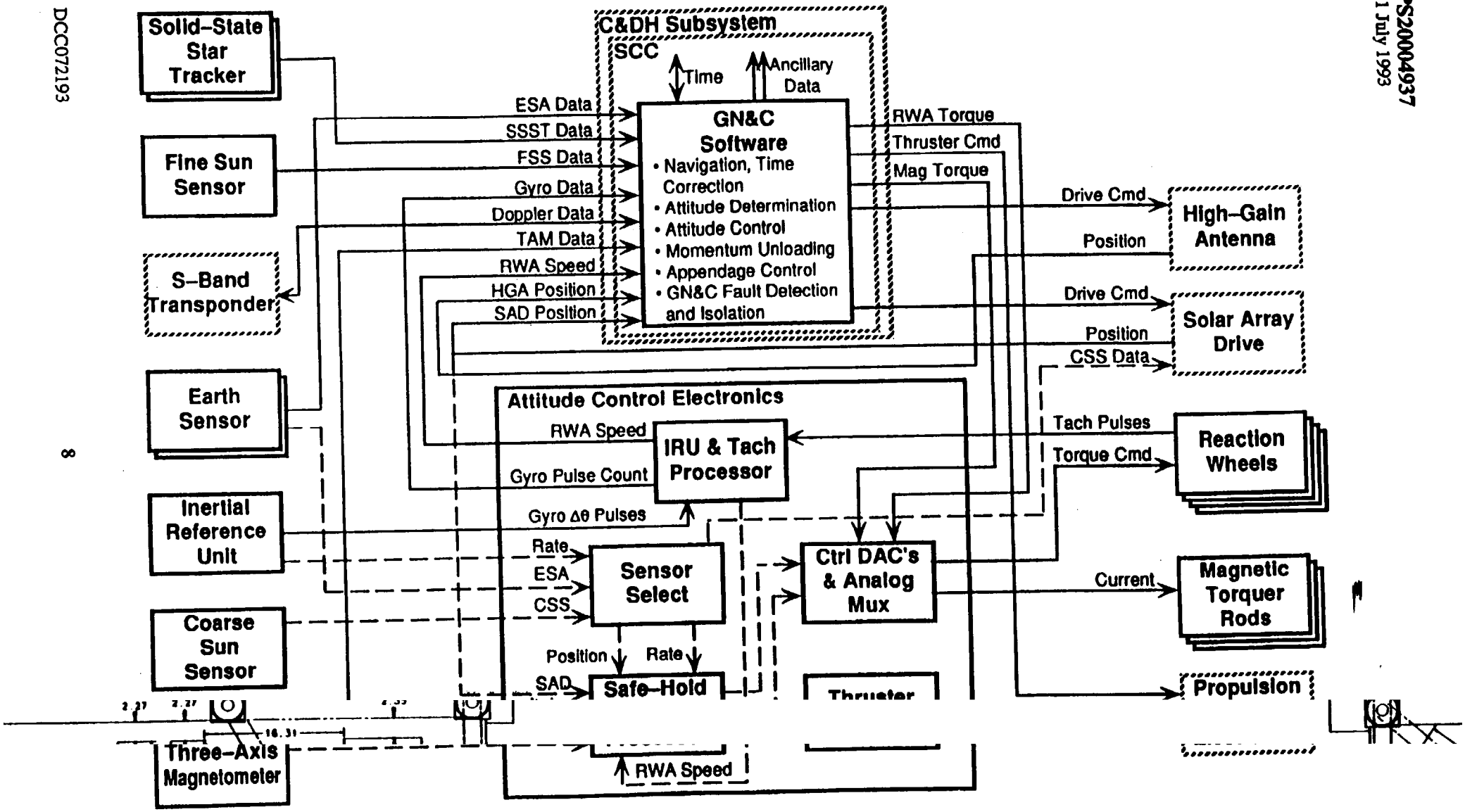

Figure 1. GN&CS Functional Block Diagram

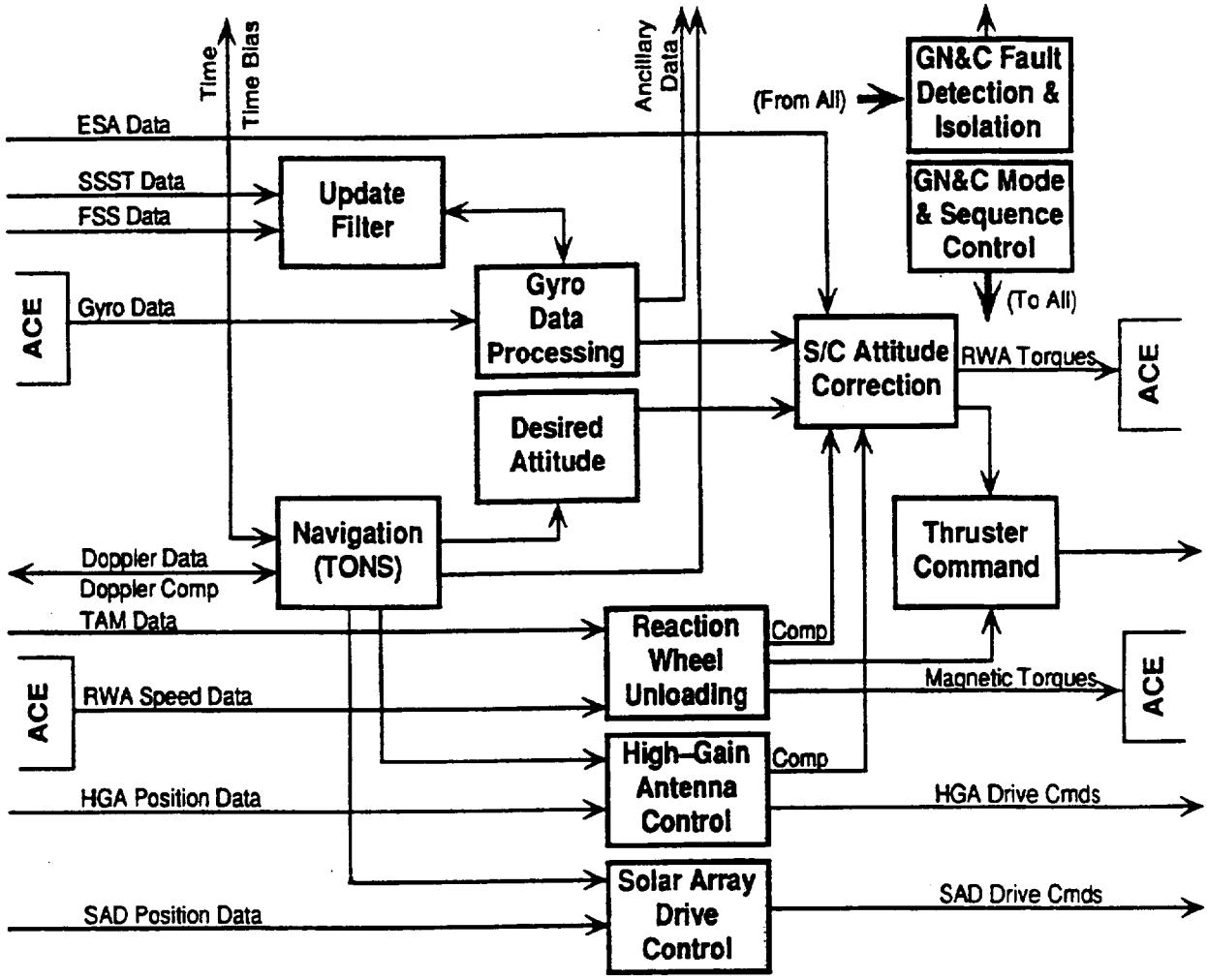

Figure 2. GN&CS Flight Software Functional Block Diagram

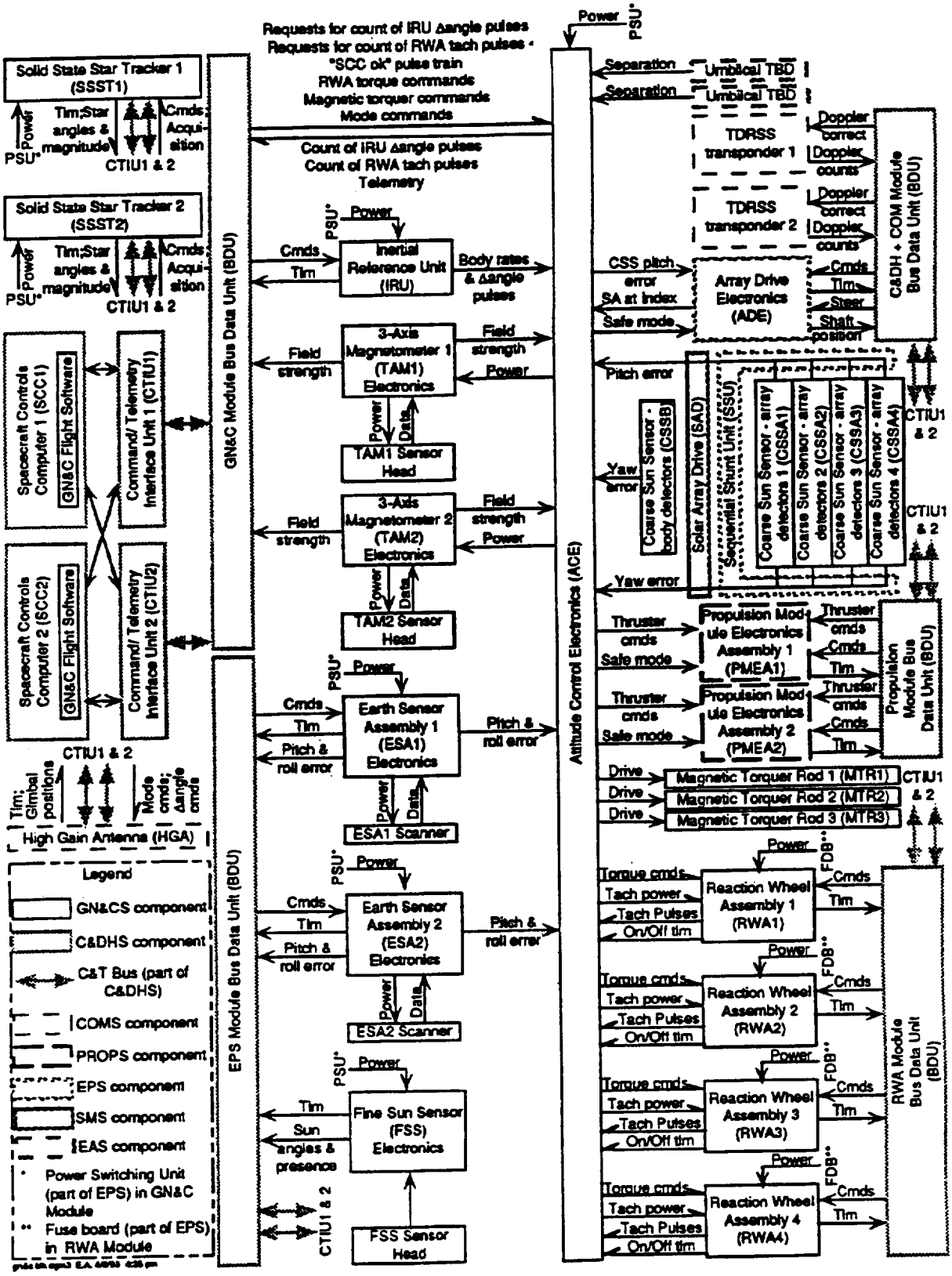

Figure 3. GN&CS Electrical Interfaces

Table I. GN&CS External Interfaces

GN&CS Interface with	Interface Topic	Control Documents
C&DHS BDUs	Electrical	GN&CS box performance specs; BDU box performance specification PS20008568
C&DHS SCC	Software–hardware physical	SCC Performance specification PS20008570; Flight Software performance specification
COMS HGA	Functional	HGA performance specification PS20008513; Flight Software performance specification
COMS Transponder	Functional	Transponder performance specification PS20008584; Flight Software specification
SMS SAD	Functional	SAD performance specification PS20008606; ADE performance specification PS20008602; ACE performance specification; Flight Software performance specification
EPS ADE	Electrical	ADE performance specification PS20008602; ACE performance specification
PROPS Thrusters	PROPS thruster mounting	PROPS performance specification PS20008618; Propulsion Module Mechanical Interface Control Document MICD20008618
PROPS Thrusters	Functional	PROPS performance specification PS20008618
PROPS PMEA	Electrical	PMEA performance specification PS20008619
SMS	Structural, alignment	GN&C Sensor Equipment Module specification PS20001407; GN&C Interface Control Document ICD20004937; GN&C box performance specifications
EPS	Power	GN&C Sensor Equipment Module specification PS20001407; GN&C box performance specifications
TCS	Thermal	GN&C Sensor Equipment Module specification PS20001407; Power Equipment Module specification PS20001408; GN&C box performance specifications
SMS	GN&C sensors fields of view	GN&C Interface Control Document ICD20004937
EPS Solar Array	Mechanical & Electrical	Coarse Sun Sensor Interface Control Document ICD20008669
TDRSS	Functional	EOS Spacecraft to TDRSS Interface Control Document, IS20008504

Table I. GN&CS External Interfaces (Continued)

GN&CS Interface with	Interface Topic	Control Documents
Launch Vehicle	Separation Conditions	Launch Vehicle Interface Requirements Document IS20008503
COMS MO	Functional	Master Oscillator specification PS20008543

Table II. GN&CS Functional Interfaces

Input to GN&CS	Source	GN&CS Activity That This Functional Input Interface Supports		Output From GN&CS	Destination	GN&CS Mode Which Employs This Functional Input In This Activity
		Activity	H/W or S/W			
Doppler frequency sums	COMS transponder via C&DHS	Navigation	S/W	• Spacecraft ephemeris • Master oscillator bias • Doppler predict	• Ancillary data to C&DHS • GN&C functions • COMS transponder	All except Safe modes
TDRS ephemerides	COMS transponder via C&DHS	Navigation	S/W	• Spacecraft ephemeris • Master oscillator bias • Doppler predict	• Ancillary data to C&DHS • GN&C functions • COMS transponder	All except Safe modes
		Determine & correct HGA pointing error		HGA speed commands	COMS HGA	All except Safe modes
Spacecraft body angles & rates	Spacecraft rotational motion measured by IRU	Determine & correct spacecraft pointing error	S/W & H/W	RWA torques	Spacecraft structure	All
				Thruster commands	PROPS PMEA	
		Determine & correct HGA pointing error		HGA speed commands	COMS HGA	All except Safe modes
		Determine & correct SAD pointing error		SAD speed commands	EPS SADE	All except Safe modes
		Failure detection – voting logic		Mode change to Safe mode	GN&CS	All except Safe modes

Table II. GN&CS Functional Interfaces (Continued)

Input to GN&CS	Source	GN&CS Activity That This Functional Input Interface Supports		Output From GN&CS	Destination	GN&CS Mode Which Employs This Functional Input In This Activity
		Activity	H/W or S/W			
Spacecraft ephemerides	COMS transponder via C&DHS	Navigation	S/W	• Spacecraft ephemeris • Master oscillator bias • Doppler predict	• Ancillary data to C&DHS • GN&C functions • COMS transponder	All except Safe modes
Spacecraft clock time bias and master oscillator frequency calibration	COMS transponder via C&DHS	Navigation	S/W	• Spacecraft ephemeris • Master oscillator bias • Doppler predict	• Ancillary data to C&DHS • GN&C functions • COMS transponder	All except Safe modes
Star fixes	Spacecraft inertial pointing direction measured by SSST	Determine & correct Spacecraft pointing error	S/W & H/W	RWA torques	Spacecraft structure	Normal
		Determine & correct HGA pointing error		HGA speed commands	COMS HGA	
		Determine & correct SAD pointing error		SAD speed commands	EPS SADE	
HGA gimbal positions	COMS HGA via C&DHS	Determine & correct HGA pointing error	S/W	HGA speed commands	COMS HGA	All except Safe modes
Solar array angle	SMS SAD via EPS SADE & C&DHS	Determine & correct array pointing error	S/W	SAD speed commands	EPS SADE	All except Safe modes

Table II. GN&CS Functional Interfaces (Continued)

Input to GN&CS	Source	GN&CS Activity That This Functional Input Interface Supports		Output From GN&CS	Destination	GN&CS Mode Which Employs This Functional Input In This Activity
		Activity	H/W or S/W			
Sun angles	Spacecraft rotational position as measured by FSS	Determine & correct spacecraft pointing error	S/W & H/W	RWA torques	Spacecraft structure	All except Safe modes
		Determine & correct HGA pointing error		HGA speed commands	COMS HGA	
		Determine & correct SAD pointing error		SAD speed commands	EPS SADE	
Sun angles	Spacecraft & solar array angular position as measured by CSS	Determine & correct spacecraft pitch & yaw error	S/W & H/W	RWA torque	Spacecraft structure	Sun–Pointing Safe mode
				Thruster commands	PROPS PMEA	
		Pass CSS pitch component of sun angle to EPS SADE	H/W	Copy of CSS pitch component of sun angle	EPS SADE	Earth–Pointing Safe mode
Magnetic field components	Measurements of Earth's magnetic field by TAM	Momentum unloading	S/W & H/W	Torques by MTR magnetic field interaction with earth's magnetic field	Spacecraft structure	All
Earth limb angles	Spacecraft pointing direction measured by ESA	Determine & correct spacecraft pointing error	S/W & H/W	RWA torques	Spacecraft structure	All except Normal mode and Sun–Pointing Safe mode
				Thruster commands	PROPS PMEA	

Table II. GN&CS Functional Interfaces (Continued)

Input to GN&CS	Source	GN&CS Activity That This Functional Input Interface Supports		Output From GN&CS	Destination	GN&CS Mode Which Employs This Functional Input In This Activity
		Activity	H/W or S/W			
		Determine & correct HGA pointing error		HGA speed commands	COMS HGA	
		Determine & correct SAD pointing error		SAD speed commands	EPS SADE	
		Failure detection – voting logic		Mode change to Safe mode	GN&CS	All except Sun–Pointing Safe mode
Orbit adjust initiation commands	C&DHS	Orbit adjust maneuvers under three–axis control	S/W & H/W	Thruster commands	PROPS PMEA	Orbit Adjust
"SCC ok" pulse train	C&DHS	SCC status monitoring	S/W	Change GN&CS mode to Safe mode	Internal to GN&CS	All
				Safe mode flag	EPS SADE & C&DHS	

3.1.2.2.2 Mechanical Interfaces

The GN&C shall, where practical, comply with the requirements of the GIS, IS20008501, Section 4, regarding Coordinate Systems, Physical Characteristics, Design and Construction, Mounting, Alignment, Mechanisms, Dynamic Characteristics, Structural Criteria, and Tooling. Exceptions to this shall be explicitly noted in the component specifications.

The Spacecraft outgassing and stray venting disturbances will not exceed the following:

a. steady venting forces $\leq 10^{-5}$ lbs

b. random venting impulses ≤ 0.028 lb–sec per orbit.

3.1.2.2.3 Thermal Interfaces

The GN&C shall, where practical, comply with the requirements of the GIS, IS20008501, Sections 1 thru 5, regarding Thermal Interfaces, Environmental Flux Parameters, and Thermal Control Hardware. Exceptions to this shall be explicitly noted in the component specifications.

3.1.2.3 Subsystem Interfaces

3.1.2.3.1 Electrical Power Subsystem Interfaces

The Electrical Power Subsystem will supply power to all GN&C hardware units in accordance with the GIS IS200008501, this document, Paragraphs 3.2.4 and 3.7.1, and the GN&C component and equipment module specifications listed in Paragraph 3.1.3.

Subsystem–level functional characteristics of the Electrical Power Subsystem that interface with the GN&C Subsystem will be as defined in the following paragraphs.

3.1.2.3.1.1 Solar Array

For the purpose of defining the Solar Array torque disturbances, the following parameters will apply:

a. The area of the Solar Array will not exceed 490 square feet.

b. The center of pressure will be located in the plane of the blanket at a distance not greater than 277 inches from the Solar Array mounting flange (see Paragraph 3.1.2.3.5.5).

c. The solar array surface properties are: (TBR–1)

   1. absorption coefficient 0.87

   2. specular reflection coefficient 0.13.

For the purpose of defining the boom deployment, the following parameters will apply:

a. The mass of the moving element (boom, Sequential Shunt, stowed Solar Array Blanket, etc.) will not exceed 460.0 pounds (TBR–2).

b. The moment of inertia of the moving element about the hinge point will not exceed 811440 **(TBR–3)** pound–inches^2.

c. The time to deploy the boom will be between 0.5 minutes and 2 minutes.

d. The impact torque at the end of travel will not exceed 335 inch–pound.

Mast (blanket) deployment will require a maximum of 15 minutes. The Solar Array during deployment will withstand the aerodynamic drag forces associated with a density of up to 0.14×10^{-10} kilograms per meter^3 with the Solar Array at an angle of attack of up to 10° with respect to the air stream. The fully deployed Solar Array during transfer orbit (perigee passage) will withstand the aerodynamic drag forces associated with a density of up to 1.0×10^{-10} kilograms per meter^3 with the Solar Array at an angle of attack of up to 90° with respect to the air stream.

Thermal distortion transfer rates (solar snap) at the time the Solar Array passes the penumbra between the sunlight and eclipse portions of the orbit will not generate a disturbance force impulse greater than 8×10^{-4} pound–seconds referred to the blanket center of mass. The force impulse will be directed along the solar array + Z axis **(TBR–4)**. Solar snap will generate a disturbance torque impulse not greater than 0.04 inch–pound–second about the Solar Array rotation axis.

The Solar Array will withstand on–orbit loads of 0.015g at the Solar Array center of gravity and applied in the direction of the Spacecraft + X axis. The Solar Array will withstand this load when rotated to any angle about its rotation axis.

The lowest bending mode frequency of the Solar Array when deployed will be at 0.22 Hz or higher.

The Solar Array will provide for mounting and interconnecting four Coarse Sun Sensor units in accordance with ICD20008669. The temperature difference between the two Coarse Sun Sensor units will not exceed 65°C.

3.1.2.3.1.2 Array Drive Electronics

The Array Drive Electronics will accept commands from GN&C and provide step pulses to the Solar Array Drive to cause the array to rotate at rates of ±W, ±2W, or ±3W (or to stop). The nominal rate W will be commandable in increments of ±0.1% or smaller. The nominal rate will be commandable over a minimum range of 1.046×10^{-3} radians/second to 1.187×10^{-3} radians/second **(TBR–5)**.

3.1.2.3.2 Thermal Control Subsystem Interfaces

The Thermal Subsystem will manage power dissipation from, and maintain the temperature of, all GN&C hardware units in accordance with the GIS IS20008501, this document Paragraph 3.7.1, and the GN&C component and equipment module specifications listed in Paragraph 3.1.3.

3.1.2.3.3 Communications Subsystem Interfaces

3.1.2.3.3.1 High Gain Antenna

3.1.2.3.3.1.1 Range and Control of High Gain Antenna Rotation

The high–gain antenna will be capable of motion over a range of ±225° in azimuth and +95, –35° in elevation. If commanded beyond these ranges, the high gain antenna will not necessarily move but will not be damaged.

The high gain antenna will provide encoder signals representing its azimuth and elevation position each 64 milliseconds. The granularity of the encoder signals will be 13 bits (~0.044°). An extra bit will be provided with the azimuth encoder reading: the 14 bits will unambiguously define the high gain antenna position over the full ±225–degree range.

The high gain antenna will accept movement commands for each axis from GN&C each time interval of 512 milliseconds. Each command shall specify the number of steps to be executed during the next time interval. Each step will produce 0.0075° of rotation. The high gain antenna will rotate at up to 1.2° per second (~82 steps per 512 millisecond time interval). The high gain antenna will distribute the commanded steps over the 512 millisecond time interval in a pseudo–random fashion such that no single frequency is excited for any sequence of step commands.

3.1.2.3.3.1.2 High Gain Antenna Mass Properties

The moving portion of the high gain antenna will weigh 185 pounds maximum. The center of mass of the moving portion of the high gain antenna is located in high gain antenna coordinates (see Paragraph 3.2.1.1.5) at X = 3.10 inches, Y = 0, and Z = 2.08 inches. The moments of inertia (pound–in^2) of the moving portion of the high gain antenna about the center of rotation are **(TBR–6)**.

$Ixx = 53279 \pm 5\%$
$Iyy = 36274 \pm 5\%$
$Izz = 43367 \pm 5\%$

The high gain antenna design will preclude any bending mode that could induce an oscillation in the gimbal position at 1/0.256 Hz or multiples of that frequency.

3.1.2.3.3.2 S–Band Doppler Transponder

The transponder will extract non–destruct Doppler frequency sum measurements every 1.024 seconds, synchronized with the spacecraft clock 1.024 second reference epoches within ±1 microsecond.

The time interval between successive Doppler phase error samples will be accurate to ±25 nanoseconds of Spacecraft elapsed time. Spacecraft elapsed time is proportional to a count of periods of the master oscillator.

The standard deviation of residual random errors in the equivalent S–Band Doppler frequency measurement over a 10 second period will not exceed 0.0033Hz.

The equivalent S–Band Doppler frequency measurement bias will not exceed 0.001 Hz over any 40–minute period, excluding the effects of the master oscillator.

The non–destruct Doppler frequency sum will accumulate for 40 minutes without rollover.

The equivalent S–Band Doppler frequency measurement resolution will be 0.001 Hz.

The transponder will add a known constant bias to the Doppler frequency sum to prevent the count from becoming negative.

The transponder will exhibit Doppler cycle slips at a rate lower than one per 100,000 seconds.

The transponder will provide cycle slip, signal strength, and receiver lock status with each Doppler frequency sum.

3.1.2.3.3.3 Master Oscillator

In the Spacecraft environment, the master oscillator normalized frequency accuracy will be better than 2.0×10^{-7}, normalized frequency stability (Allan Variance) will be better than 1.0×10^{-12} per 10 seconds, normalized drift will be less than 1.0×10^{-11} per 100 minutes and less than 1.0×10^{-10} per one day.

3.1.2.3.4 Command and Data Handling Subsystem Interfaces

The Command and Data Handling Subsystem will interface with all GN&C hardware units in accordance with the GIS IS200008501, the following subparagraphs, and the GN&C component and equipment module specifications listed in Paragraph 3.1.3.

Subsystem–level functional characteristics of the Command and Data Handling Subsystem that interface with the GN&C Subsystem will be as defined in the following paragraphs.

3.1.2.3.4.1 Computation Service: Software Hosting

All GN&CS Flight Software except the Safe Mode control firmware will reside in the C&DHS Spacecraft Controls Computers (SCCs). The Safe Mode control firmware shall reside in the Attitude Control Electronics (ACE).

The GN&C Flight Software shall perform all tasks defined herein except Safe Mode.

The GN&C flight software implementation will be such that the code and/or data can be modified (i.e., reprogrammed) while the Spacecraft is on orbit.

3.1.2.3.4.2 Data Transport and Timing

The C&DHS will provide data collection for, and command distribution from, the GN&C flight software as defined in Section 3.7.3.1. Figure 4 identifies the Spacecraft components and data paths involved in data collection by the GN&C Flight Software, in all modes except Safe Mode. Figure 5 identifies the Spacecraft components and data paths involved in command distribution by the GN&CS Flight Software in all modes except Safe Mode.

3.1.2.3.5 Structure and Mechanisms Subsystem Interfaces

The Structure and Mechanisms Subsystem will interface with all GN&C hardware units in accordance with the GIS IS200008501, this document Paragraph 3.2.3, GN&C ICD and the GN&C component and equipment module specifications listed in Paragraph 3.1.3.

Subsystem–level functional characteristics of the Structure and Mechanisms Subsystem that interface with the GN&C Subsystem will be as defined in the following paragraphs.

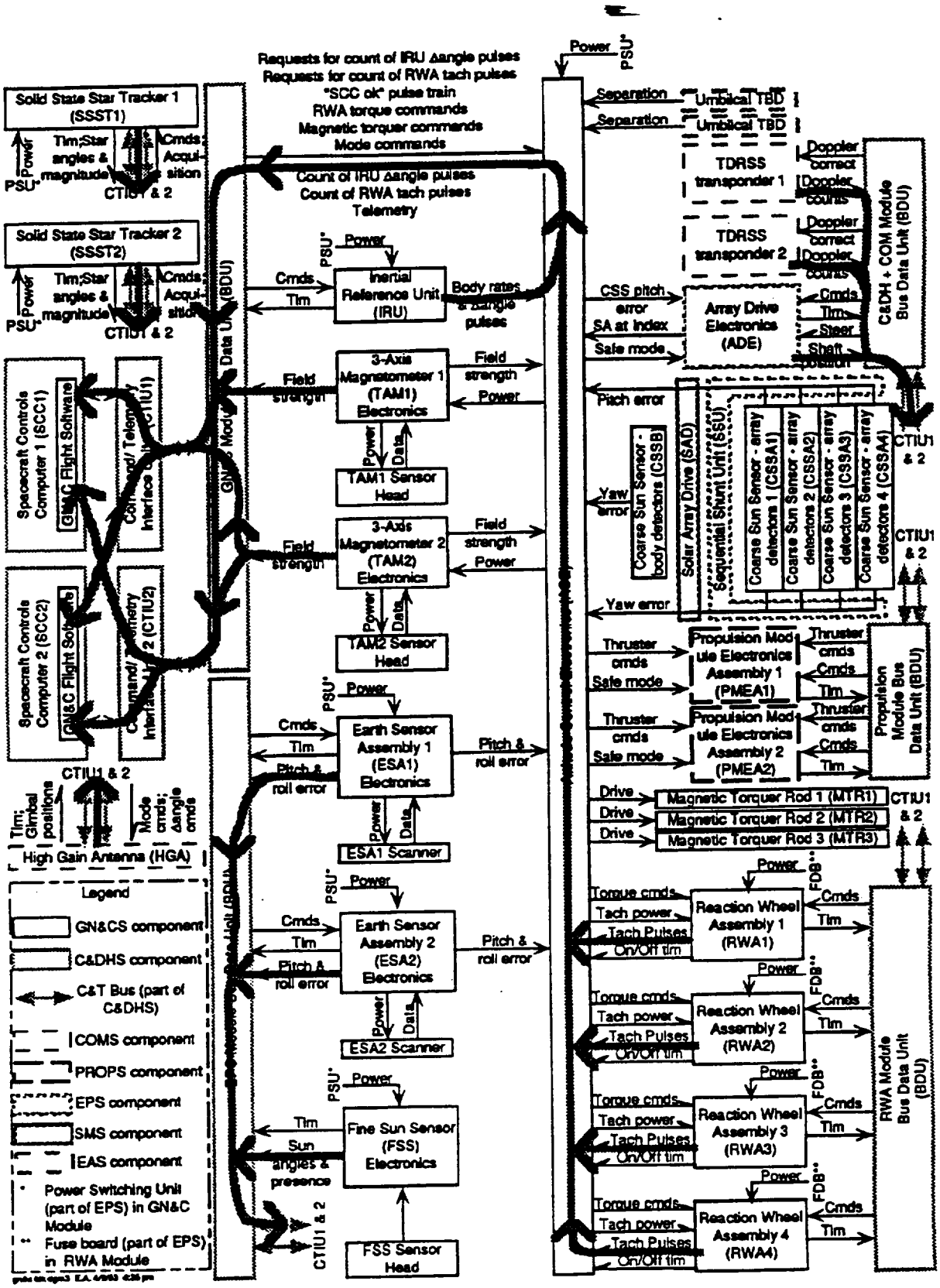

Figure 4. Data Collection Paths—All Non–Safe–Modes Combined

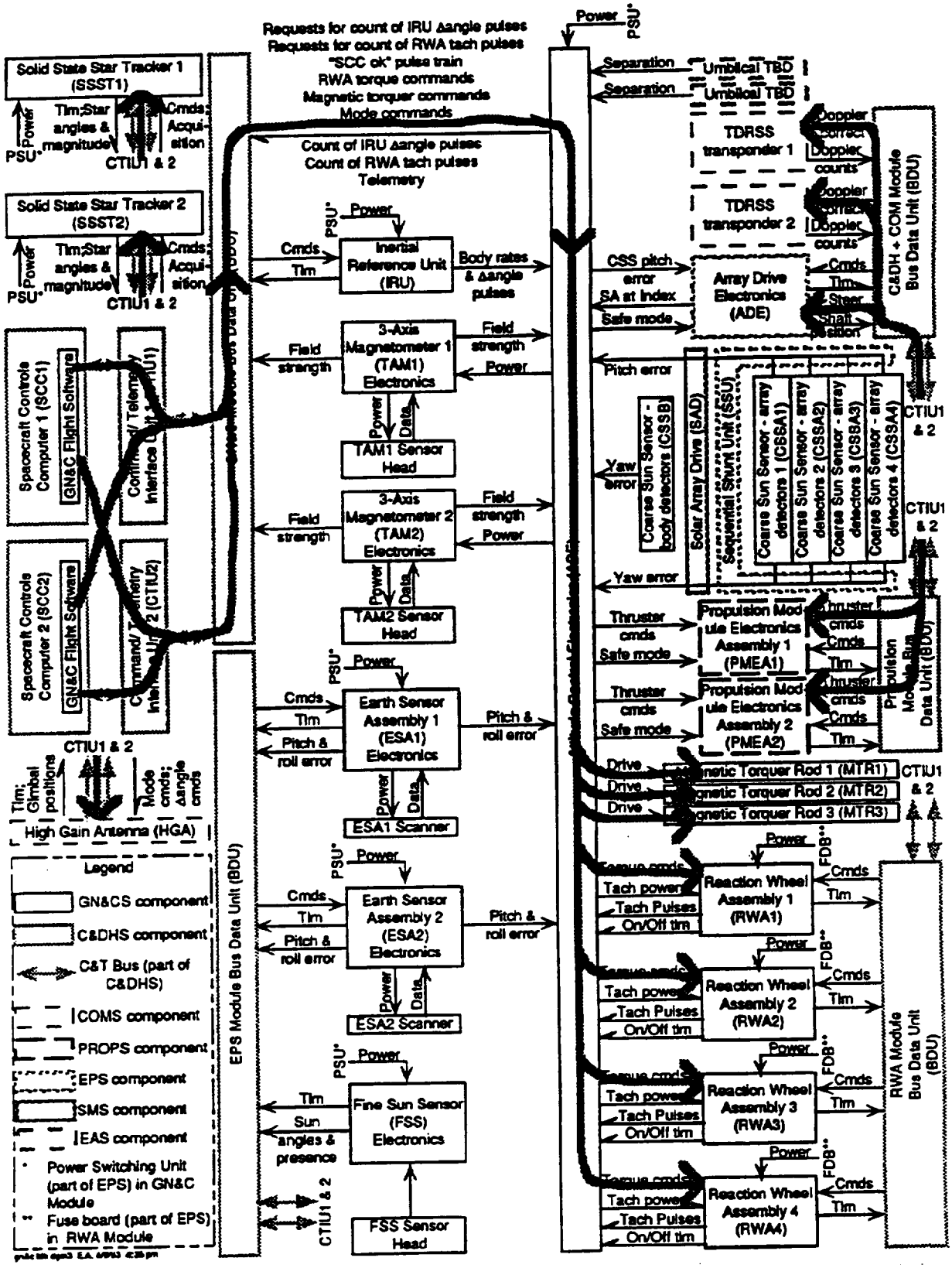

Figure 5. Control Distribution Paths—All Non–Safe–Modes Combined

3.1.2.3.5.1 Mass Properties

The Spacecraft will mass properties are shown in Table III with a tolerance of ±10% as : (The "total" cases are for the solar array oriented at 0° see Paragraph 3.2.1.1.6.) (All coordinates are in the Spacecraft body coordinate frame: see Paragraph 3.2.1.1.3.)

3.1.2.3.5.2 Equipment Mounting

Sensor Module equipment will be mounted as defined in the Sensor Equipment Module Specification PS20001407. RWAs will be mounted as defined in RWA Equipment Module Specification PS20001409. The Earth Sensors, Fine Sun Sensor, Coarse Sun Sensors, and Magnetic Torque Rods will be mounted as defined in the GN&C subsystem ICD, ICD20004937.

Equipment will be mounted in the GN&C sensor equipment module and the RWA equipment module such that:

a. Items which for safety reasons may require rapid prelaunch maintenance will be readily accessible.

b. Items requiring frequent access during I&T or other prelaunch operations will be accessible during I&T.

3.1.2.3.5.3 Alignment/Optical Bench

The alignment requirements are defined in the GN&C Subsystem ICD, ICD20004937.

3.1.2.3.5.4 Solar Array Drive

The solar array drive will step in response to pulses from the array drive electronics. The step size will be 1/40000 of a revolution (0.009°).

The solar array drive will provide a signal or signals such that GN&C can determine the array rotation angle.

3.1.2.3.5.5 Mounting Locations of Components which Generate Disturbance Forces

The center of the high gain antenna mounting flange is located in Spacecraft body coordinates at X = 150.5 inches, Y = –3.5 inches, and Z = –107.4 inches.

The center of the solar array mounting flange is located in Spacecraft body coordinates at X = 128.00 inches, Y = –36.67 inches, and Z = –44.22 inches.

3.1.2.3.5.6 Oscillatory Motion of the HGA Pedestal

The HGA phase center peak–to–peak motion will not exceed 0.002 meters in the line–of–sight direction to TDRS over any 10.24–second interval during a TDRS contact.

Table III. Spacecraft Phase Inertia Matrix

Phase	1 Launch	2 Separation	3 Solar Array HGA Deploy	4 Orbit Acquisition	5 Orbit Acq. w/o Solar Array	6 End of Life
Mass (lbm)	10142.89	10142.89	10142.89	9778.89	9325.49	9402.42
Center of Gravity						
X (in)	106.300	106.300	103.758	106.646	105.606	110.225
Y (in)	1.435	1.435	–4.075	–4.226	4.196	–4.396
Z (in)	–1.607	–1.607	–6.400	–6.638	–4.672	–6.904
Inertias (lbm–in^2)						
Ixx	1.6115e+07	1.6115e+07	4.1477e+07	4.1392e+07	1.8284e+07	4.1306e+07
Iyy	6.4298e+07	6.4298e+07	6.4283e+07	6.1960e+07	6.0161e+07	5.8781e+07
Izz	6.0704e+07	6.0704e+07	7.6922e+07	7.4609e+07	5.1364e+07	7.1440e+07
Ixy	1.4550e+05	1.4550e+05	–1.0640e+06	–9.4458e+05	8.0389e+05	–7.9666e+05
Iyz	–2.1177e+05	–2.1177e+05	3.0871e+06	3.0773e+06	4.9310e+04	3.0663e+06
Ixz	2.6974e+06	2.6974e+06	1.7195e+06	1.9070e+06	2.3191e+06	2.1394e+06

3.1.2.3.6 Propulsion Subsystem Interfaces

3.1.2.3.6.1 Delta–V Thrusters

The delta–V thruster locations and thrust directions are defined below: (Entries are in inches in Spacecraft body coordinates.)

Thruster Number	Location			Force Unit Vector		
	X	Y	Z	X	Y	Z
DV #1	–9.4	–19.4	0.8	1.0	0.0	0.0
DV #2	–9.4	–17.7	3.4	1.0	0.0	0.0
DV #3	–9.4	11.7	–13.7	1.0	0.0	0.0
DV #4	–9.4	10.1	–16.4	1.0	0.0	0.0

Thrust misalignment with respect to the directions shown above will be less than 0.30 degrees.

Thrust levels of the delta–V thrusters will be 5 pounds nominal. For the purpose of fuel usage accounting the Isp will be 215 $pound_f$–seconds/$pound_m$.

The minimum achievable value of delta–V impulse will be not more than 0.005 meters per second, assuming a Spacecraft mass as defined in Paragraph 3.1.2.3.5.1. It will be possible for the GN&C subsystem to control the delta–V impulse to a granularity not greater than 0.0005 meters per second, assuming a Spacecraft mass as defined in Paragraph 3.1.2.3.5.1.

The combined delta–V errors from errors in propulsion system pressure knowledge and thrust force repeatability will be less than 5% for all burns longer than 0.512 seconds.

3.1.2.3.6.2 Attitude Control Thrusters

The attitude control thruster locations and thrust directions are defined below (Entries are in inches in Spacecraft body coordinates.)

Thruster Number (Primary/Redundant)	Location			Force Unit Vector		
	X	Y	Z	X	Y	Z
ACS #1/17	–4.3/–2.3	–30.6	–6.7	0.0	1.0	0.0
ACS #2/18	–4.3/–2.3	–30.6	10.5	0.0	0.866	0.5
ACS #3/19	–4.3/–2.3	30.6	10.5	0.0	–0.866	0.5
ACS #4/20	–4.3/–2.3	30.6	–6.7	0.0	–1.0	0.0
ACS #5/21	–4.3/–2.3	30.6	–10.5	0.0	–0.866	–0.5
ACS #6/22	–4.3/–2.3	–30.6	–10.5	0.0	0.866	–0.5

Thrust misalignment with respect to the directions shown above will be less than 0.30 degrees.

Thrust levels of the attitude control thrusters will be 1 pound nominal. For the purpose of fuel usage accounting the Isp will be 215 $pound_f$–seconds/$pound_m$.

3.1.2.3.6.3 Thruster Control

The thruster firing pulse widths commanded by the GN&C shall be 48 milliseconds minimum. The thrusters will be commandable in increments of 8 milliseconds.

The Propulsion module will accept thruster firing commands from two independent sources within GN&C:

a. From the GN&C software via the Command and Data Handling subsystem when the GN&C is in a mode other than the Safe Mode, and

b. From the Attitude Control Electronics when GN&C is in the Safe Mode.

3.1.2.3.6.4 Propellant Mass Estimation

The propulsion module design will provide the capability of determining the remaining propellant mass to within ±10 pounds, and the propellant center of mass to within ±0.5 inch.

3.1.2.3.7 Electrical Accommodations Subsystem Interfaces

The Electrical Accommodations Subsystem will provide interconnections among all GN&C hardware units, and between GN&C and other interfacing hardware units, in accordance with the GIS IS200008501, and the GN&C component and equipment module specifications listed in Paragraph 3.1.3.

3.1.2.4 Ground System Interfaces with TONS

The GSFC Flight Dynamics Facility (FDF) and the TDRSS will provide the support defined below to the TONS.

3.1.2.4.1 Contact Schedules

TDRSS S–Band Single Access and Multiple Access contacts will be scheduled as necessary to meet navigation requirements.

The ground system scheduling of TDRSS for TONS will consider:

a. Contact frequency

b. Contact duration

c. In–plane Doppler observability based on selection of TDRS East or TDRS West

d. Location of contact in EOS orbit

e. Ionospheric refraction

f. Line–of–sight visibility, EMI constraints and Sun constraints, azimuth rewind constraints

g. High gain antenna position limits or keyhole limits

h. Known regions of high RFI which might affect Doppler measurement accuracy

i. TDRS propulsive maneuvers

j. EOS propulsive maneuvers

k. Master oscillator frequency adjustments.

3.1.2.4.2 TDRS Forward Signal Characteristics

TDRSS S–Band signal quality will be accurate and stable to better than 1.0×10^{-12} parts, and otherwise consistent with the Space Network User's Guide (NASA STDN 101.2) and the EOS TDRSS ICD (ICD20008504)

The transmitted TDRSS S–Band signal will not be Doppler compensated while EOS is using the signal for navigation.

3.1.2.4.3 Primary Navigation Support Data

The ground system will uplink four TDRS position and velocity vectors, as often as once per day. The uplinked position and velocity will be of sufficient accuracy and resolution such that

[1] a one–day fourth–order Runge–Kutta numerical integration with a 10.24 second time step;

[2] in a 48–bit 1750A word length processor;

[3] with a force model consisting of an [8 x 8] GEM–T3 geopotential, solar and lunar gravity, and solar pressure;

[4] will generate TDRS positions accurate to ±150 meters (per axis, 3–sigma); and

[5] will generate TDRS velocities accurate to ±0.011 meters/second (per axis, 3–sigma).

The ground system will set and uplink a flag to indicate TDRS propulsive maneuvers.

The ground system will compute and uplink Spacecraft mass and center of mass after EOS propulsive maneuvers.

The ground system will compute and uplink a Spacecraft clock calibration parameter, as often as once per 24 hours, accurate to ±50 microseconds with respect to UTC. Leap second corrections to UTC will be uplinked. The master oscillator normalized frequency bias and frequency drift will also be computed and uplinked at the same time.

The ground system will compute and uplink an initial state vector and associated state error covariance matrix for the primary navigation system.

The ground system will obtain and uplink a solar activity parameter, as often as once per day.

The ground system will uplink navigation mode changes, initialization data, filter tuning parameters, other data base parameters, and navigation software updates as necessary.

3.1.2.4.4 Backup Navigation Support Data

The ground system will compute and uplink backup EOS mean orbit elements as often as once per 24 hours, and as necessary after EOS propulsive maneuvers. During the operational phase, position data will be accurate to ±50 kilometers after two days of onboard use, 3–sigma.

The ground system will compute and uplink four (4) backup TDRS mean orbit elements as often as once per 24 hours, and as necessary after TDRS propulsive maneuvers. During the operational phase, position data will be accurate to ±120 kilometers after two days of onboard use, 3–sigma.

3.1.3 Major Component List

The Major Components of the GN&CS shall be as listed in Table IV.

Table IV. Major Component List

Subsystem Component	Number Required	Performance Specification
GN&C Sensor Equipment Module	1	PS20001407
RWA Equipment Module	1	PS20001409
Reaction Wheel Assembly (RWA)	4	PS20001423
Inertial Reference Unit (IRU)	1	PS20003823
Three–Axis Magnetometer (TAM)	2	PS20003825
Attitude Control Electronics (ACE)	1	PS20034900
Earth Sensor Assembly (ESA)	2	PS20003827
Fine Sun Sensor (FSS)	1	PS20003828
Magnetic Torque Rod (MTR)	3	PS20003829
Solid State Star Tracker (SSST)	2	PS20003830
Coarse Sun Sensor Assembly (CSS)	1	PS20008669

3.2 Characteristics

3.2.1 Guidance, Attitude Determination, and Control

GN&C shall maintain real–time, on–board estimates of the Spacecraft attitude and attitude rates relative to the reference pointing frame. These data shall support attitude and appendage control.

GN&C shall provide reaction wheels (RWAs) as momentum storage devices as the primary means of controlling attitude angles and attitude rates during the Operational mission phase.

3.2.1.1 Coordinate Systems

Figures 6 and 7 illustrate the coordinate systems.

3.2.1.1.1 Earth–Centered Inertial Frame

The Earth–centered inertial (ECI) frame is defined in terms of the mean equator and equinox of epoch J2000. The ECI frame has its X axis toward the mean equinox of J2000 and its Z axis pointing North and normal to the mean equator of J2000.

3.2.1.1.2 Reference Pointing Frame

The reference pointing frame is a radius–tangential–normal (RTN) frame defined in terms of the Spacecraft's orbit. The RTN frame is obtained from the ECI frame by rotating the ECI frame as follows:

a. $+\Omega$ about Z, where Ω is the right ascension of the orbit's ascending node

b. $+i$ about X, where i is the inclination

c. and $+u$ about Z, where u is the argument of latitude

3.2.1.1.3 Spacecraft Body Frame

The Spacecraft body frame is as defined in the GIS (IS20008501). The definition is repeated here for reference. The Spacecraft body frame is illustrated in Figure 7. The origin for Spacecraft body coordinates is at the geometric center of the primary structure bulkhead #1 (the first bulkhead above the separation plane). When the Spacecraft is in its nominal orientation, the body frame is related to the RTN frame as follows:

Body Axis	Pointing Direction of the Spacecraft Body Axis	Corresponding RTN Axis
X	(Approximate) Velocity Direction	Y
Y	Orbit Anti–Normal	–Z
Z	Nadir	–X

3.2.1.1.4 Sun Angles

The Sun position relative to the orbit plane is characterized by two angles: (α) and (β), where

α is the angle in the orbit plane measured positive about the orbit normal from the ascending node to the projection of the Sun vector in the orbit plane, and

β is the angle of the Sun vector out of the orbit plane, positive toward the orbit normal.

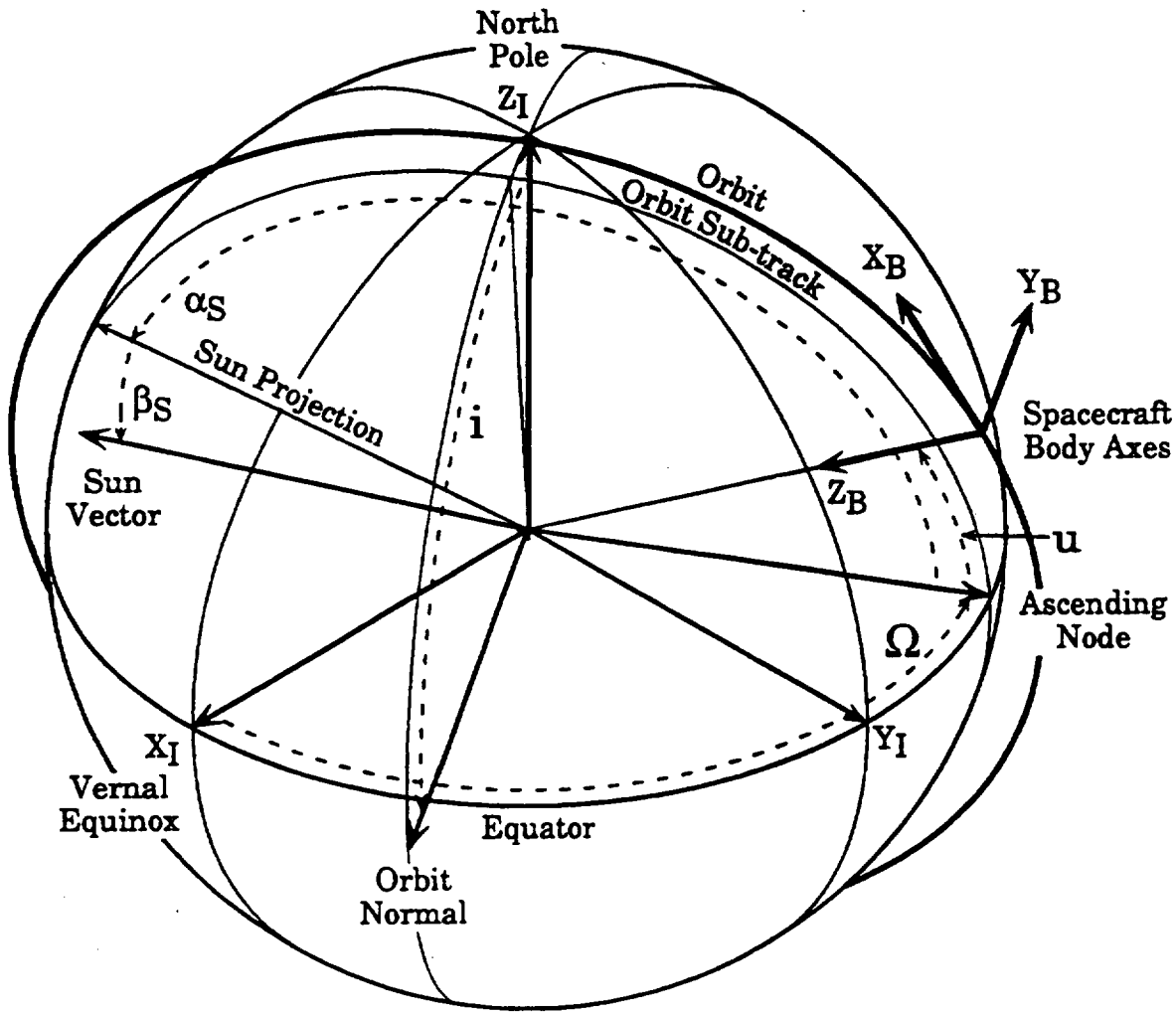

Figure 6. Orbit Coordinate Systems

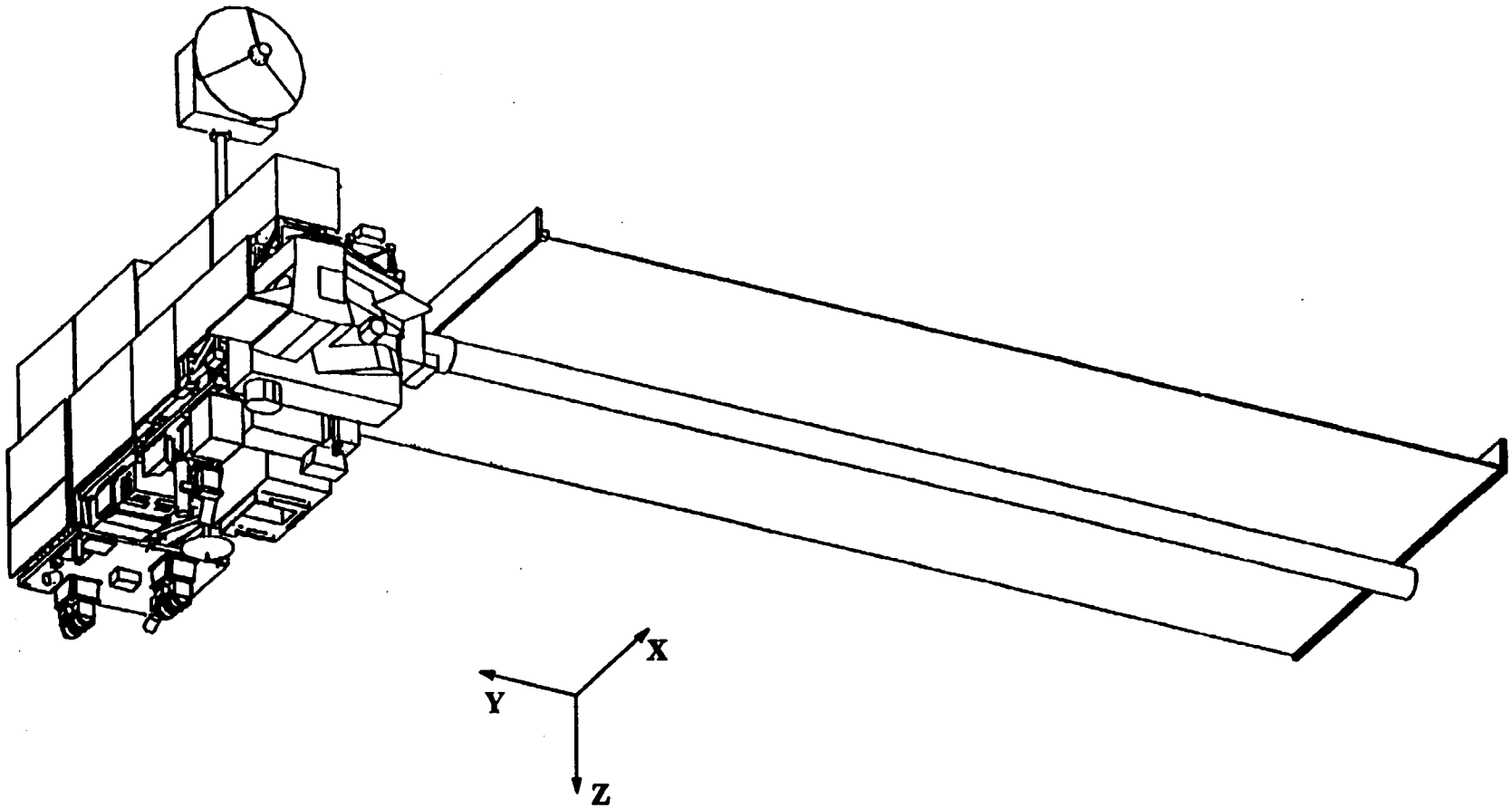

Figure 7. EOS Spacecraft Coordinate System

3.2.1.1.5 High Gain Antenna

The high gain antenna +X axis is aligned with the antenna boresight positive toward the target (i.e. TDRS). The high gain antenna is driven by a set of elevation–over–azimuth gimbals. When the high gain antenna azimuth and elevation are zero, the antenna +Z axis is aligned with the azimuth axis, positive away from the mounting flange. The origin of the high gain antenna coordinates is at the center of rotation of the gimbals. The origin (center of rotation) is located 11.17 inches above (Spacecraft body –Z direction) the center of the high gain antenna mounting flange. The location in Spacecraft body coordinates of the center of the high gain antenna mounting flange is defined in Paragraph 3.1.2.3.5.5.

The high gain antenna azimuth axis is nominally in the same direction as the Spacecraft body Z axis. When the high gain antenna azimuth and elevation are zero, the antenna boresight points toward a target in the Spacecraft body +X direction. Antenna azimuth is defined as a positive rotation about the Spacecraft body +Z direction. Antenna elevation is defined as positive toward the zenith (Spacecraft body –Z) direction.

The high gain antenna axes and Spacecraft body axes are co–aligned when the azimuth angle and the elevation angle are both equal to zero.

3.2.1.1.6 Solar Array

The solar array Y axis is its nominal rotation axis and is nominally in the same direction as the Spacecraft body Y axis. The solar array Z axis is normal to the plane of the array and is positive on the opposite side of the array from the cells (i.e. when the array is correctly pointed, the Sun is in the –Z direction). The origin for the solar array coordinates is at the center of the Solar Array Drive mounting flange. The location of the origin of the solar array coordinates, in Spacecraft body coordinates, is defined in Paragraph 3.1.2.3.5.5.

Solar array rotation angle is defined as a positive rotation about the solar array Y axis. When the solar array rotation angle is zero, the solar array Z axis is nominally in the same direction as the Spacecraft body Z axis.

3.2.1.2 Orbital Parameters

The GN&CS shall satisfy all of the requirements of this specification while the Spacecraft is in a nominal Sun synchronous, near circular frozen orbit with the nominal orbit parameters listed in Table V. The GN&CS shall also provide control of the Spacecraft at lower altitudes prior to and during the final orbit achievement burns following separation from the launch vehicle. The injection orbit parameters are listed in Table VI. Unless specifically defined otherwise, altitude is defined as the difference between the geocentric radius vector to the Spacecraft and the Mean Equatorial Earth Radius of 6378.14 kilometers.

Table V. Operational Phase Orbit

Mean Semi Major Axis	7078 ± 5 km
Mean Inclination	98.2° ± 0.15°
Mean Eccentricity	0.0012 ± 0.0004
Mean Argument of Perigee	90° ± 20°
Descending Node	10:15 – 10:45 AM (local mean solar time)

Table VI. Injection Orbit

Perigee Altitude	550 km
Apogee Altitude	705 km
Inclination	98.2°
Argument of Perigee	168°
Descending Node	10:15 –10:45 AM (local mean solar time)

The GN&CS shall have the capability to support acquiring and maintaining an orbit with a ground track repeatability as listed below:

Repetition Interval	233 revs (16 days)
Repetition Accuracy	±20 km 3σ at all latitudes, cross track
Radial Orbit Position repeatability	±5 km 3σ at a given latitude

3.2.1.3 Guidance, Navigation, and Control Modes

The operating modes of the GN&CS are shown in Table VII. The table also lists the sensors and actuators used for each mode as well as the method of momentum management, and the Spacecraft processor used. Table VII relates GN&CS modes with Spacecraft modes.

3.2.1.3.1 Earth Acquisition/Hold

Following Separation from the launch vehicle, the GN&CS shall autonomously acquire the earth utilizing the ESA units and the reaction wheels. Thrusters will be used, if necessary, to reduce high spacecraft body rates resulting from launch vehicle separation.

The ESAs and IRU signals shall provide the control system attitude and rate measurements during Earth acquisition and during the transition to the normal operational mode. The yaw attitude shall be derived using a gyrocompassing technique. These signals shall be sampled, processed, and filtered using algorithms resident in the Flight computer. The Earth Acquisition controller shall operate at a 0.512 second interval.

Table VII. GN&CS Sensor and Effector Utilization

Mode / Submode	Actuators		Attitude and Rate Error Source								Momentum Unloading	Control Device
			Sensor Data				Update Filter					
	REA	RWA	ESA	IRU	YGC	CSS	ESA	SSST	IRU	FSS		
Earth Acquisition												
Local Vertical Acquisition	B	P	P	P								
Yaw Acquisition	B	P	P	P	P						MTR (REA)	SCC
Update Filter							P	B	P	P	MTR (REA)	SCC
Normal												
Stellar Acquisition		P	P	P	P		B	P	P	B	MTR (REA)	SCC
Update FIlter (Earth Pointing)		P	D	D			B	P	P	B	MTR (REA)	SCC
Update FIlter (Offset Pointing)		P	D	D			B	P	P	B	MTR (REA)	SCC
Orbit Adjust	P		B	B					P			
Safehold												
Earth Ponting	P	P	P	P	P						MTR (REA)	ACE
Sun Pointing	P	P		P		P					MTR (REA)	ACE

P – Primary
B – Backup
D – Failure Detection

ACE – Attitude Control Electronics Safehold Controller
MTR – Magnetic Torquer Rods
REA – Thrusters
YGC – Yaw Gyrocompassing
SCC – Spacecraft Control Computer

The Earth Acquisition mode shall have the capability of initializing and using the Update Filter to compute attitude errors for control of the Spacecraft.

The reaction wheels or ACS thrusters shall be used to control the Spacecraft attitude and angular rate during Earth acquisition. The magnetic torquers shall be the primary actuators for reaction wheel momentum unloading with thrusters as a backup.

In Earth Acquisition/Hold Mode the GN&CS shall use attitude control logic that is sufficiently robust to accommodate the large pointing errors that are possible during earth acquisition, and to accommodate actuation by the RWAs or the thrusters.

3.2.1.3.1.1 Local Vertical Acquisition Submode

The local vertical acquisition submode of Earth Acquisition/Hold shall be initiated upon entry into Earth acquisition mode provided that Earth presence is indicated from either ESA. In the LV acquisition submode, attitude error signals for the roll and pitch axes shall be used to generate control torque signals. The ACS thrusters or reaction wheels will be used to generate the control torques in this submode. Once roll and pitch attitude errors and body rate errors are reduced to acceptable levels, and remain within these thresholds for 15 seconds, an autonomous switch to Yaw Gyrocompass submode shall be made.

3.2.1.3.1.2 Yaw Acquisition Submode

After Spacecraft roll and pitch attitude errors have been reduced to less than 4.0°, and angular rate errors have been reduced to less than 0.13, 0.10, 0.10 degrees per second (roll, pitch and yaw axes respectively), and remain within the thresholds for 15 seconds, Yaw Acquisition submode shall be autonomously entered. In this submode, yaw attitude shall be derived by using the roll axis rate data (yaw gyrocompassing). After the derived yaw attitude error signal has been reduced to less than 4.0 degrees and remains within that threshold for 300 seconds, yaw acquisition is complete. The GN&C shall remain in this submode until changed by ground command, or autonomously transition to Local Vertical Acquisition submode if body attitude or rate error thresholds are exceeded.

It shall be possible to initialize the Update Filter while in the Yaw Acquisition mode. During Update Filter initialization the software algorithms shall process the ESA, IRU, and SSSTs to estimate the Spacecraft attitude error relative to the ECI frame. The FSS shall be used as a backup sensor for attitude determination in this mode. Spacecraft attitude control shall be performed on ESA's for roll and pitch, and gyrocompassing for yaw.

3.2.1.3.1.3 Update Filter Submode

The Update Filter submode is entered by ground command after Update Filter convergence. The attitude errors computed by the Update Filter are used to control the Spacecraft in this submode. The control torque is provided by the reaction wheels or thrusters with magnetic unloading. Thruster unloading is a back–up to magnetics. This submode shall be selectable by command during transfer Orbit to obtain precise attitude determination and control during Orbit Acquisition burns.

3.2.1.3.2 Normal Mode

The Normal mode shall be the primary on–orbit, science data collecting GN&C mode. During the Normal mode, the GN&CS shall maintain pointing to the local vertical reference defined in 3.2.1.1.2, after Update Filter convergence. This pointing shall be maintained to the required stability and accuracy requirements while in Normal mode with the Update Filter converged.

In Normal mode the GN&CS shall use attitude control logic that is sufficiently robust to accommodate the attitude errors associated with Yaw Acquisition submode, accommodate actuation by the RWAs, and accommodate momentum unloading by the MTRs or the thrusters.

The transition to the Normal mode from Earth Acquisition/Hold mode shall be by ground command. The transition to Normal mode from Orbit Adjust mode shall be autonomous.

It shall be possible to calibrate the ACS and EOS payload sensors while in the Normal mode.

While in the Normal mode, the sensor data processing (with the exception of the gyro and high gain antenna prefilter), and control system algorithms which reside in flight software shall be executed at 0.512 second intervals. The gyro prefilter shall execute at a 0.128 second interval and the high gain antenna prefilter shall execute at 0.064 second intervals. The Update Filter shall execute at 10.24 second intervals.

3.2.1.3.2.1 Stellar Acquisition Submode

The Stellar Acquisition submode shall be entered autonomously after Normal mode has been commanded and Yaw Acquisition submode is indicated as complete.

In this submode the GN&CS Flight Software shall use The ESA, IRU, and SSSTs to acquire a star to initialize the Normal mode attitude determination algorithms. The FSS shall be used as a backup sensor for attitude determination in this mode. Attitude error signals shall be generated using ESAs for roll and pitch, and gyrocompassing for yaw. The control torque shall be provided by the reaction wheels with magnetic unloading. Thruster unloading is a back–up to magnetics.

3.2.1.3.2.2 Update Filter Submode

The Update Filter submode is entered by ground command after Update Filter convergence. This is the submode which is used for precise Spacecraft pointing during science data collection. The attitude errors computed by the Update Filter are used to control the Spacecraft in this submode. The control torque shall be provided by the reaction wheels with magnetic unloading. Thruster unloading is a back–up to magnetics.

The GN&CS shall accept commands to offset point the Spacecraft by ± 10° in the Roll axis and up to ± 180° in the Yaw axis while in the Normal mode. There is no offset capability required for the Pitch axis. The offset pointing logic shall be resident in the flight software, and shall provide capability to bias the commanded rate and attitude euler parameters used for Normal mode attitude control in the Update Filter submode.

The offset pointing will be used for IRU calibration and may be used for instrument calibration and yaw offset pointing under thruster control for orbit maintenance burns.

3.2.1.3.3 Orbit Adjust Mode

The GN&CS shall maintain three–axis control, with pointing offset capability, of the Spacecraft during the orbit acquisition burns, during periodic drag make–up burns, and inclination burns. During this mode the Spacecraft shall have the capability to slew to any yaw angle prior to the start of the maneuver. Upon termination of the maneuver the Spacecraft shall automatically return to the previous GN&CS mode. The sensor data processing, sampling, and control system algorithms shall be resident in the flight software and execute at 0.512 second intervals. Thruster commands shall be issued at 1.024 second intervals (every other 0.512 second cycle).

The Orbit Adjust mode shall be entered by ground command (stored command load) from either the Earth Acquisition/Hold mode (with yaw gyrocompass completed) or the Normal mode (with Update Filter converged). The duration of the delta velocity burns is computed on the ground and loaded into the GN&C Flight Software. The GN&CS Flight Software shall format burn commands which the Executive Flight Software and the C&DHS C&T Bus will deliver commands to the PROPS PMEA. The commands shall include burn durations and the PROPS PMEA will terminate the burns after the commanded burn times have elapsed. Upon completion of the Orbit adjust maneuver, the Spacecraft shall re–orient to the previous orientation, and return to the previous GN&C mode.

The GN&CS shall have the capability to support generating contingency retrograde thrusts to decrease Spacecraft orbital velocity for ground track control or frozen orbit eccentricity vector control.

Attitude determination and control shall be provided during all DV maneuvers. Attitude errors are derived by one of two methods.

a. Primary attitude determination using the Normal mode Update Filter.

b. Alternate attitude determination using ESAs for roll and pitch; integrated yaw gyro for yaw. As in the Earth Acquisition/Hold mode, the ESAs shall provide the roll and pitch attitude reference during the burns; and the yaw attitude reference shall be provided by the integrated output of the yaw axis gyro. Prior to the burns, the gyro–derived yaw attitude shall be initialized to the current yaw attitude estimate.

3.2.1.3.4 Safe Mode

In Safe Mode the GN&CS shall control Spacecraft attitude totally independent of the Spacecraft Controls Computer. In Safe Mode the GN&CS shall command no DV maneuvers. In Safe Mode the GN&CS shall either orient the Spacecraft body +Z axis relative to the Earth and the –Y axis relative to the orbit normal (Earth–pointing Safe Mode) or orient the Spacecraft body –X axis relative to the Sun and maintain rate control only on the X axis (Sun–pointing Safe Mode). The GN&CS shall provide an inertial hold capability while in Safe Mode. The Attitude Control Electronics (ACE) shall provide the sensor signal buffering, scaling, and control system functions necessary for Spacecraft attitude control while in Safe Mode. The ACE Safe Hold Data processor shall execute at a 1.024–second interval.

GN&CS shall respond to the following causes by the following effects:

Cause	Effect
Ground command or stored command to select between Earth Pointing and Sun Pointing; no associated command to enter Safe Mode	Set selection in accord with command; no mode change if not already in Safe Mode; change to selected version of Safe Mode if already in the other version of Safe Mode
Ground command or stored command to go to Safe Mode	Either, depending on associated selection commands; default to the last previous selection if no other commands
GN&C FDIR software command to go to Safe Mode	Either, depending on associated selection commands; default to the last previous selection if no other commands
Loss of "SCC OK" pulse train	Last previous selection

In Safe Mode the GN&CS shall either

a. Acquire and maintain an Earth–oriented attitude,

b. Maintain a thermal/power safe Sun–oriented attitude, or

c. Maintain an inertially fixed attitude.

The GN&CS shall be able to enter Safe Mode from any other mode after separation from the booster and activation of the attitude control system. Exit from the Safe Mode shall occur only upon ground command.

During the Safe Mode the Spacecraft attitude shall be controlled by the ACE and not the Spacecraft Control Computer. The attitude control actuators for Safe Mode shall be either reaction wheels or thrusters. The ACE shall utilize magnetic unloading (thruster unloading if enabled).

During the Safe Mode the SCC may or may not continue to execute GN&C software, but in either case the ACE shall control the Spacecraft attitude. The relationship of the GN&C Safe Modes to the EOS Spacecraft system's modes will be as defined in Paragraph 3.2.2.

3.2.1.3.4.1 Earth–Pointing Safe Mode

In Earth–Pointing Safe Mode the GN&CS shall perform the following functions:

a. The ACE shall use error signals as provided by the ESA and IRUs to generate control torque commands to reaction wheels or thrusters to maintain an Earth pointed orientation.

b. The ACE shall provide fixed control gains which can be used to support Safe Mode operation in transfer Orbit and nominal mission Orbit altitudes.

c. The ACE shall provide a pitch rate bias capability. This bias range is required to have values corresponding to average orbit rate and zero for the Pitch (Y) axis.

d. The ACE shall use wheels or thrusters for control torque with magnetic only or magnetic and thruster unloading of reaction wheel momentum. Thruster unloading and thruster control shall not be operating simultaneously.

e. The ACE shall command the EPS ADE into Safe Mode (refer to PS20008602).

f. The ACE shall provide the EPS ADE with the CSS pitch error signal.

g. The ACE shall command the PROPS PMEA into Safe Mode.

If the GN&CS enters Earth–Pointing Safe Mode as result of GN&CS FDIR software action, the GN&CS shall perform the following additional function:

a. The GN&CS Flight Software shall command the EPS ADE to Earth Presence mode.

3.2.1.3.4.2 Sun–Pointing Safe Mode

In Sun–Pointing Safe Mode the GN&CS shall perform the following functions:

a. The ACE shall use error signals as provided by the CSS for generating control commands. These signals shall nominally be used once the solar array has reached the "index" position. Indication of this array position will be provided by the Array Drive Electronics (ADE). At the index position, the cell side of the solar array faces the –X (Spacecraft frame) direction.

b. The ACE shall acquire the Sun from any Spacecraft orientation,

c. The ACE shall control the Spacecraft attitude to maintain the Sun perpendicular to the solar array by using the Pitch (Y) and Yaw (Z) coarse Sun sensor information after the EPA ADE provides the "Solar Array at Index" signal indicating that valid CSS data is available.

d. The ACE shall have the capability to override the array "at index" indication via command.

e. The position about the Sun line, the Spacecraft Roll (X) axis, shall be uncontrolled. The Spacecraft angular rates shall be damped.

f. The ACE shall provide a commandable sun line rate bias capability. This bias range is required to have values between zero and ±0.625° per second. Rate bias commands will be used to support Earth acquisition from any arbitrary Spacecraft attitude.

g. The ACE shall provide the capability to change the default Sun sensor and rate bias transformation to allow for changes in the "Solar Array at Index" position.

h. The ACE shall control the Spacecraft using wheels only, or thrusters only. When using wheels, magnetic and/or thruster unloading shall be available.

i. The ACE shall command the EPS ADE into Safe Mode.

j. The ACE shall command the PROPS PMEA into Safe Mode.

If the GN&CS enters Sun Pointing Safe Mode as result of GN&CS FDIR software action, the GN&CS shall perform the following additional function:

a. The GN&CS Flight Software shall command the EPS ADE to Inertial Mode.

3.2.1.3.4.3 Inertial Hold Safe Mode

The Inertial Hold Safe Mode shall be entered by ground command only. In Inertial Hold Safe Mode the GN&CS shall perform the following functions:

a. The ACE shall maintain an inertial reference using the integral of the digital IRU outputs to provide an inertial attitude error signal.

b. The ACE shall use the IRU in the high rate mode during Inertial Hold.

c. The ACE shall have the capability to apply a rate bias to the accumulated digital IRU outputs.

d. The ACE shall control the spacecraft using wheels only, or thrusters only. When using wheels, magnetic and/or thruster unloading shall be available.

e. The ACE shall command the EPS ADE into Safe Mode.

f. The ACE shall command the PROPS PMEA into Safe Mode.

3.2.1.3.5 Pre–Operational Tasks

The GN&CS shall be capable of maintaining a standby status while attached to the launch vehicle, and transition to active control of the Spacecraft after separation. This transition to acquisition mode or ACE Safe Mode shall occur within 3.0 seconds **(TBR–7)** after separation.

3.2.1.4 Attitude Determination and Control Performance

3.2.1.4.1 Earth Acquisition/Hold Mode Attitude Determination and Control Performance

GN&C shall acquire a stable Earth–based attitude within 30 minutes after launch vehicle separation.

The GN&CS shall provide a telemetry indication of earth acquisition completion.

GN&CS shall maintain Earth pointing with errors not exceeding the values shown below: (Entries are in degrees, zero–to–peak, 3σ.)

Axis	Roll	Pitch	Yaw
Transfer Orbit:			
Thruster Control	10.0	10.0	10.0
Mission Orbit			
Thruster Control	2.0	2.0	4.0
Reaction Wheel Control	1.0	1.0	2.0

3.2.1.4.2 Normal Mode Attitude Determination and Control Performance

3.2.1.4.2.1 Pointing Knowledge

GN&C dynamic pointing knowledge errors comprise errors in attitude determination and attitude errors associated with errors in the determined Spacecraft position vector and velocity vector.

GN&C static pointing knowledge errors comprise measurement, star position and launch shift errors of the star trackers.

The GN&C contribution to system pointing knowledge at the instrument interface shall not exceed the values listed below: (Entries are in arc seconds, zero–to–peak, 3σ.)

Axis	Roll	Pitch	Yaw
GN&C Dynamic Spec	15.2	14.5	10.7
GN&C Static Spec	11.8	11.8	11.8

3.2.1.4.2.2 Pointing Accuracy

The GN&C dynamic pointing accuracy allocation includes GN&C dynamic pointing accuracy errors and also non–GN&C dynamic pointing accuracy errors. GN&C dynamic pointing accuracy errors comprise errors in attitude determination, attitude errors associated with errors in the determined Spacecraft position vector and velocity vector, and errors associated with attitude control. Non–GN&C dynamic pointing accuracy errors are those induced by instrument disturbances and those induced by internal disturbances due to the high–gain antenna and the solar array.

GN&C static pointing accuracy errors comprise measurement errors, thermal distortion, moisture distortion, and launch shift errors of the star trackers.

The allocations for these errors are given in the following below. (Entries are in arc seconds, zero–to–peak, 3σ.) The GN&C contribution to system pointing accuracy at the instrument interface shall not exceed the values listed below on the lines headed "GN&C Dynamic Specification" and "GN&C Static Specification":

Axis	Roll	Pitch	Yaw
GN&C–Related Dynamic Allocation	18.5	17.2	13.1
GN&C Dynamic Specification	17.4	16.4	11.7
Response to Housekeeping Disturbances	2.0	1.5	1.0
Response to Instrument Disturbances	6.0	5.0	5.5
GN&C Static Specification	11.8	11.8	11.8

3.2.1.4.2.3 Short–Term Pointing Stability/Jitter

The GN&C short–term pointing stability/jitter allocation includes GN&C short–term pointing stability/jitter errors and also non–GN&C short–term pointing stability/jitter errors. GN&C short–term pointing stability/jitter errors comprise errors in attitude determination, attitude errors

associated with errors in the determined Spacecraft position vector and velocity vector, and errors associated with attitude control. Non–GN&C short–term pointing stability/jitter errors are those induced by instrument disturbances and those induced by internal disturbances due to the high–gain antenna and the solar array.

The allocations for these errors are given below. (Entries are in arc seconds, peak–to–peak, 3σ. The stability/jitter error is defined as the difference between the highest and lowest values of attitude error encountered in a window of the length stated, where the window may start at any time (i.e., a sliding window)). The GN&C contribution to system short–term pointing stability/jitter errors at the instrument interface shall not exceed the values listed below under the heading "GN&C Dynamic Specification."

Jitter Window Length	1.8 second			9 seconds		
Axis	Roll	Pitch	Yaw	Roll	Pitch	Yaw
GN&C–Related Dynamic Allocation	2.1	2.1	1.6	7.7	8.1	7.5
GN&C Dynamic Specification	0.9	0.7	0.7	3.4	2.6	2.5
Response to Housekeeping Disturbances	0.4	0.7	0.7	1.8	1.2	2.0
Response to Instrument Disturbances	1.9	1.8	1.3	6.7	7.6	6.8

3.2.1.4.2.4 Long–term Pointing Stability/Jitter

The GN&C long–term pointing stability/jitter allocation includes GN&C long–term pointing stability/jitter errors and also non–GN&C long–term pointing stability/jitter errors. GN&C long–term pointing stability/jitter errors comprise errors in attitude determination, attitude errors associated with errors in the determined Spacecraft position vector and velocity vector, and errors associated with attitude control. Non–GN&C long–term pointing stability/jitter errors are those induced by instrument disturbances and those induced by internal disturbances due to the high–gain antenna and the solar array.

The allocations for these errors are given below. (Entries are in arc seconds, peak–to–peak, 3σ. The stability/jitter error is defined as the difference between the highest and lowest values of attitude error encountered in a window of the length stated, where the window may start at any time (i.e., a sliding window). The GN&C contribution to system long–term pointing stability/jitter errors at the instrument interface shall not exceed the values listed below on the line headed "GN&C Dynamic Specification."

Jitter Window Length	420 seconds		
Axis	Roll	Pitch	Yaw
GN&C–Related Dynamic Allocation	13.4	10.6	12.2
GN&C Dynamic Specification	9.5	8.9	8.0
Response to Housekeeping Disturbances	4.8	4.1	3.9
Response to Instrument Disturbances	8.1	4.0	3.9

3.2.1.4.3 Orbit Adjust Mode Attitude Determination and Control Performance

GN&C shall be capable on command of orienting the Spacecraft properly to perform propulsive maneuvers for orbit acquisition and orbit maintenance. Specifically, the maneuvers indicated below shall be supported. GN&C shall maintain Earth pointing with errors not exceeding the values given below: (Entries are in degrees, zero–to–peak, 3σ.)

Orbit Maneuver	Yaw Angle (degrees)	Accuracy Roll	Pitch	Yaw
Orbit Acquisition (In–Plane)	0	3.0	3.0	3.0
Orbit Acquisition (Out–Of–Plane)	±(75 to 105)	3.0	3.0	3.0
Orbit Maintenance (In–Plane)	0, ±180	3.0	3.0	3.0
Orbit Maintenance (Out–of–Plane)	(75 to 105)	3.0	3.0	3.0

3.2.1.4.4 Safe Mode Attitude Determination and Control Requirements

GN&C in Safe Earth–pointing mode shall maintain Earth pointing with errors not exceeding the values given below: (Entries are in degrees, zero–to–peak, 3σ.)

Axis	Roll	Pitch	Yaw
Transfer Orbit:			
Thruster Control	10.0	10.0	15.0
Mission Orbit			
Thruster Control	5.0	5.0	10.0
Reaction Wheel Control	2.0	2.0	4.0

GN&C upon entering Safe Sun–pointing mode shall cause the solar array to drive to the point where the cell–side array normal is oriented in the –X direction. The GN&C shall sense the Sun's direction and use this information to acquire and maintain a Sun–pointing attitude such that the cell–side array normal is oriented toward the Sun with errors not exceeding the values given below: (Entries are in degrees, zero–to–peak, 3σ.)

Axis	Roll	Pitch	Yaw
Transfer Orbit:			
Thruster Control	N/A	20.0	30.0
Mission Orbit			
Thruster Control	N/A	15.0	18.0
Reaction Wheel Control	N/A	15.0	18.0

GN&C in Safe Sun–pointing mode shall be capable of acquiring on command a stable Earth–based attitude from any arbitrary initial attitude within 90 **(TBR–8)** minutes.

3.2.1.5 Appendage Control Performance

3.2.1.5.1 Solar Array Control Performance

GN&C shall support closed–loop pointing of the Solar Array by generating solar array drive commands to rotate or slew the array during all post separation mission phases in all modes except safe–modes. During transfer orbit operation the solar array will be clocked at orbit rate to track the Sun. GN&C shall, on command, cease commanding the solar array motion.

During normal operation the GN&C contribution to solar array pointing error shall not exceed the values given below: (Entries are in degrees, zero–to–peak, 3σ.)

	Error
Open–Loop	12.0
Transfer Orbit	
Closed–Loop	
Earth Acq/Hold Mode	
Thruster Control	7.0
Reaction Wheel Control	7.0
Normal Mode	5.0
Orbit Adjust Mode	7.0

3.2.1.5.2 High Gain Antenna Control Performance

GN&C shall generate azimuth and elevation gimbal commands such that the High Gain Antenna points to and tracks any TDRS Spacecraft, when EOS is in its mission orbit in an Earth oriented attitude, based on an uplinked contact schedule from the EOS Spacecraft ground control center. The GN&C shall also accept commands to facilitate ground control of the High Gain Antenna.

The GN&C allocation for high gain antenna pointing error includes GN&C High Gain Antenna pointing errors and also non–GN&C High Gain Antenna pointing errors. The non–GN&C High Gain Antenna pointing error relates to the residual error from calibrating the static misalignments, and is allocated 0.035° per axis, zero–to–peak, 3σ. The GN&C contribution to High Gain Antenna pointing error shall not exceed the values given below: (Entries are in degrees per axis, zero–to–peak, 3σ.)

	Error
Mission Orbit	
Earth Acq/Hold Mode	3.0
Normal Mode	0.15
Orbit Adjust Mode	3.0
Earth–Pointing Safe Mode with RWA Control	4.0

3.2.1.6 Momentum Unloading Performance

The capability to unload excess Spacecraft RWA momentum shall be provided. Momentum unloading shall be provided for all modes where wheel control is enabled and shall nominally be autonomous. Momentum unloading may also be initiated and/or disabled by ground command.

3.2.1.6.1 Reaction Wheel Momentum Margins

The GN&CS shall maintain each RWA speed to within 75% of capacity.

3.2.1.6.2 Magnetic Unloading

The capability to unload accumulated momentum stored in the RWAs employing magnetic torquer rods (MTRs) shall be provided. Torques shall be generated by driving MTRs mounted on the Spacecraft. Magnetic momentum unloading shall be the primary momentum unloading mode, and shall prevent reaction wheel saturation under all nominal conditions. This performance shall be provided with one or both coils on each torquer enabled.

3.2.1.6.3 Thruster Unloading

The capability to unload accumulated momentum stored in the RWAs employing the ACS thrusters shall be provided. This mode of operation shall be the backup momentum unloading mode, and shall prevent reaction wheel saturation.

3.2.1.7 Navigation Performance

3.2.1.7.1 Solar Ephemeris Accuracy

A solar ephemeris shall be maintained onboard the Spacecraft to support solar array pointing, attitude determination, and navigation.

The navigation system shall compute the position of the Sun accurate to ±10 arc seconds with respect to the center of the Earth.

3.2.1.7.2 Lunar Ephemeris Accuracy

A lunar ephemeris shall be maintained onboard the Spacecraft to support attitude determination and navigation.

The navigation system shall compute the position of the moon accurate to ±0.5° with respect to the center of the Earth.

3.2.1.7.3 Onboard Navigation

The navigation system shall provide real time estimates of the position and velocity of EOS, updated every 0.512 sec.

3.2.1.7.3.1 Primary Navigation

The GN&CS shall utilize the TDRSS Onboard Navigation System (TONS) for estimating the orbit state vector. This orbit state vector estimate shall support high gain antenna pointing, solar array pointing, attitude determination/control, S–band Doppler frequency predictions, and ancillary data.

3.2.1.7.3.1.1 EOS Position and Velocity

The primary navigation system shall estimate EOS position and velocity using TDRSS S–Band Doppler Measurements.

The primary navigation system shall provide real time estimates of EOS position with an accuracy of ±150 meters, per axis 3–sigma, during EOS Science Mode.

The primary navigation system shall provide real time estimates of EOS velocity with an accuracy of ±0.160 meters/sec, cross–track 3–sigma, during EOS Science Mode.

3.2.1.7.3.1.2 TDRS State Vectors

The primary navigation system shall provide a real time estimate of the position and velocity of the ground specified TDRS Spacecraft every 0.512 sec.

The primary system shall numerically integrate the ground system uplinked position and velocity for four (4) TDRS Spacecraft.

3.2.1.7.3.1.3 Time Maintenance Support

The primary navigation system shall estimate and integrate the EOS master oscillator normalized frequency error, with the integrated value accurate to ±10 microseconds (3–sigma) after 24 hours, during EOS Science Mode.

3.2.1.7.3.1.4 TDRS S–Band Transponder Doppler Compensation

The primary navigation system shall provide S–Band Doppler compensation estimates to the TDRSS S–Band transponder, accurate to ±1500 Hz (3–sigma), during EOS Science Mode.

3.2.1.7.3.2 Backup Navigation

The GN&CS shall utilize an independent onboard ephemeris as the backup source of data for computing the orbit state vector. This orbit state vector shall support high gain antenna pointing, solar array pointing, and degraded attitude determination/control. This independent onboard ephemeris will be generated by the GSFC FDF and uplinked to the Spacecraft as often as once every 24 hours, and after orbit maneuvers as necessary.

3.2.1.7.3.2.1 Backup EOS Position and Velocity

The backup navigation system shall compute EOS position and velocity using ground uplinked mean orbit elements.

The backup navigation system shall be used as an onboard check of the primary navigation system EOS position and velocity data.

3.2.1.7.3.2.2 Backup TDRS Position and Velocity

The backup TDRS navigation system shall compute the position and velocity of the ground specified TDRS Spacecraft every 0.512 sec.

The backup TDRS navigation system shall compute TDRS positions and velocities from ground system uplinked mean orbit elements.

The backup TDRS navigation system shall be used as an onboard check of the primary navigation system TDRS position and velocity data.

3.2.1.7.4 High Gain Antenna Line–of–Sight Pointing Commands

The navigation system shall support a TDRS tracking mode, a calibration mode, a position command mode, a rate command mode, and a hold mode.

The navigation system shall compute line–of–sight azimuth and elevation gimbal position and rate commands, to the ground specified TDRS, when EOS is in its earth oriented attitude, updated every 0.512 seconds.

3.2.1.7.5 Solar Array Line–of–Sight Pointing Commands

The navigation system shall use EOS position data and Sun position data to compute the solar array drive angle that optimizes solar energy collection, updated every 0.512 sec.

3.2.1.8 Failure Detection/Correction

3.2.1.8.1 Failure Tolerance

GN&C shall continue to maintain Spacecraft attitude as defined herein without interruptions that may threaten Spacecraft bus and instrument survival.

3.2.1.8.1.1 Single Credible Hard Failure Tolerance

GN&C shall perform the functions specified herein after any single credible hard failure.

3.2.1.8.1.2 Redundant Path Independence

Redundant functional paths shall be Separated or protected such that no single credible event will cause the loss of both paths.

3.2.1.8.1.3 Containment

No single GN&C functional or physical failure shall cause other failures external to the component in which the failure occurs.

3.2.1.8.1.4 Back–up Memory

GN&C shall maintain the ACE Safe Hold Data Processor memory loads, which are the memory loads critical to Spacecraft survival, in non–volatile storage for use in initiation or restoration of operations after anomalies.

3.2.1.8.2 Failure Monitoring

3.2.1.8.2.1 Critical Failure Detectability

GN&C failures which may threaten Spacecraft survival shall be detectable. It shall be possible to locate faults to the redundant path level.

3.2.1.8.2.2 Health and Status Checks

GN&C shall perform on–orbit health and status checks of GN&C components to verify subsystem integrity through the first instance of a hard failure. GN&C shall provide telemetry data to support periodic and ground commanded monitoring of GN&C components.

3.2.1.8.2.3 Anomaly Reports to the Ground

GN&C, upon detection of a fault, shall generate indications for transmission in telemetry identifying the fault detected and the corrective action(s) taken, if any.

3.2.1.8.3 Autonomous Failure Responses

3.2.1.8.3.1 Override

GN&C shall allow the override of all autonomous anomaly responses by ground control.

3.2.1.8.3.2 Survival Threat

GN&C shall autonomously transition to Safe Mode in accordance with Paragraph 3.2.1.3.4 at the earlier of the following cases:

a. At the first instance in which a failure occurs after which continued Spacecraft operation may threaten the survival of the Spacecraft itself or of a Spacecraft element; and

b. At the first instance in which the health and status checks in 3.2.1.8.2.2 detect an anomaly and are unable to determine whether or not continued Spacecraft operation may threaten the survival of the Spacecraft itself or of a Spacecraft element.

GN&C shall remain in the Safe Mode until otherwise commanded from the ground. (This does not preclude further autonomous response and safing.)

3.2.1.8.3.3 Not Time–Critical

GN&C shall await ground intervention in response to anomalies detected by the health and status checks in 3.2.1.8.2.2 which do not require time–critical action, unless operational considerations mandate autonomous response.

3.2.1.9 GN&C Commands

GN&C shall accept and execute commands delivered to it via the Command, Telemetry, and Control (CT&C) Software. These commands may originate on the ground or in the flight software.

GN&C shall execute commands immediately upon receipt.

3.2.1.9.1 Reconfiguration Commands

GN&C shall accept and execute commands to reconfigure the subsystem as necessary to support subsystem Spacecraft and subsystem mode transitions.

GN&C shall accept and execute commands to reconfigure the subsystem as necessary to support subsystem redundancy management.

3.2.1.9.2 Command State Dependency

GN&C and its components shall be commandable to known states regardless of earlier states. Subsystem and component commands which have different functionality depending on current state, such as "toggle" commands, shall not be permitted.

3.2.1.9.3 Command Recoverability

No single subsystem or component command shall place GN&C or any of its components into a configuration from which it can not recover.

3.2.1.9.4 Function Override/Inhibit Commands

GN&C shall accept and execute commands to override or inhibit the execution of automatic functions which may interfere with Spacecraft operations or jeopardize the health of the Spacecraft. Such functions shall include, as a minimum, those which may cause:

a. The transition of the Spacecraft out of the Science mode,

b. The issuance of any commands whose execution may be inadvisable after a particular anomaly, and

c. The issuance of any commands which would configure the system to follow a particular redundant path (one which may have been assessed to be faulty).

3.2.1.10 GN&C Telemetry

3.2.1.10.1 Health and Safety Telemetry Provision

GN&C shall provide telemetry for inclusion in the C&DHS health and safety telemetry stream.

3.2.1.10.2 Health and Safety Telemetry Content

The health and safety telemetry provided by GN&C in all Spacecraft modes shall be sufficient to support contingency operations. These data shall indicate the current status of the subsystem, and shall allow assessment and monitoring of subsystem health and safety.

3.2.1.10.3 Housekeeping Telemetry Provision

GN&C shall provide telemetry for inclusion in the C&DHS normal housekeeping telemetry stream.

Telemetry provided for the health and safety stream shall not be duplicated for the housekeeping stream. All telemetry provided for the health and safety stream will also be included in the housekeeping stream. Additional samples of telemetry values sampled at low frequency for the health and safety stream may be provided for the housekeeping stream.

3.2.1.10.4 Housekeeping Telemetry Content

The housekeeping telemetry provided by GN&C shall be sufficient to support normal operations, diagnostic operations for the analysis of anomalies, and Spacecraft and GN&C performance monitoring and checkout. These data shall allow ground controllers to assess the operational state of GN&C, monitor critical subsystem functions, and aid in fault detection and correction.

GN&C housekeeping telemetry shall as a minimum, contain the following:

a. Redundancy status of GN&C and its components,

b. Health and safety status data,

c. Indications of resource usage,

d. Indications of sensed failures or anomalies,

e. Data suitable for verifying execution of each GN&C command,

f. Notification of all autonomous switching between redundant paths, and

g. Information which will enable ground operators to calibrate the on–orbit alignment of sensors and activators.

GN&C shall provide, during all modes, telemetry points necessary for monitoring the operation of its hardware and software components, in order to support detection of anomalous conditions which may indicate component failures. All such sensed failures and any corrective action taken shall be reported to the ground via housekeeping telemetry. This report shall be periodically repeated until acknowledged from the ground.

3.2.1.10.5 Housekeeping Telemetry Mode Dependence

During operation in all Spacecraft and GN&C modes, the GN&C housekeeping telemetry shall contain identical data, to the extent that such data are available in the current mode.

3.2.1.11 Ancillary Data Generation

GN&C shall provide Spacecraft orbital position, velocity, attitude, and attitude rate information for inclusion in ancillary data for use by the instruments.

GN&C shall provide magnetic torquer coil current information for inclusion in ancillary data.

GN&C shall provide solar and lunar position information for inclusion in ancillary data.

GN&C shall reference all pointing data in ancillary data to the navigation base, and shall reference all position data to the Earth's center.

The GN&C provided ancillary data shall be time correlated such that validity times may be determined. The data shall be provided within 1.024 seconds of the time of validity.

3.2.2 Operational Modes

The relationship between GN&C modes, EOS Operating Modes and the CEI defined Mission Phases is shown in Table VIII.

The details of GN&CS modes and mode transition rules are specified in 3.2.1.3.

Table VIII. Mission Phase vs EOS Spacecraft Mode vs GN&C Mode

Mission Phase	System Operating Modes	ACS Modes
Prelaunch	Ground Test	Pre–Operational
Launch/Ascent	Survival	Pre–Operational
Orbit Acquisition Initialization	Survival	Earth Acquisition/Hold
	Safe	Earth Pointing Safe
		Sun Pointing Safe
Orbit Acquisition	Survival	Earth Acquisition/Hold
	Delta–V	Orbit Adjust
	Safe	Earth Pointing Safe
		Sun Pointing Safe
Operational Initialization	Standby	Earth Acquisition/Hold
		Normal
	Delta–V	Orbit Adjust
	Survival	Earth Acquisition/Hold
	Safe	Earth Pointing Safe
		Sun Pointing Safe
Operational	Science	Normal (Update Filter Converged)
	Delta–V	Orbit Adjust
	Standby	Earth Acquisition/Hold
		Normal
	Survival	Earth Acquisition/Hold
		Normal
	Safe	Earth Pointing Safe
		Sun Pointing Safe
End–of–Mission	Survival	Earth Acquisition/Hold
	Safe	Earth Pointing Safe
		Sun Pointing Safe

3.2.3 Physical Characteristics

3.2.3.1 Mass

The mass of the GN&CS shall not exceed 390 lbs. The center of mass, products of inertia, and mass estimate accuracies shall be as defined in Section 4 of IS20008501.

3.2.3.2 Durability

[1] The GN&C shall be made only of materials and components capable of withstanding for five years environmental conditions specified in 3.2.6 without evidence of damage as defined below

[2] The GN&C shall also be capable of withstanding, without evidence of physical damage (as defined below), any wear due to the functioning of the system.

[3] Damage shall be considered to be any change in the GN&C or components which may degrade subsystem performance to levels below those specified herein.

[4] The GN&CS shall be capable of meeting all operational requirements as specified herein, in the environments specified in 3.2.7, for the duration of five years on orbit.

3.2.3.3 Layout and Dimensions

[1] The GN&C layout and

[2] Maximum component dimensions shall be in accordance with PS20001407, PS20001409, and ICS20004937.

3.2.3.4 Maintainability and Impact on Design

[1] To the extent practical, the GN&C shall facilitate maintenance by being functionally, mechanically, and electrically independent from all other Spacecraft elements except as stated in Section 3.1.2 herein

[2] and by being modular to the extent practical.

[3] The GN&CS shall be designed to use existing ground support equipment (GSE) wherever practical, rather than requiring the design of new equipment.

3.2.3.5 Handling Features

The GN&CS and/or GSE designs shall include handling features which reduce the likelihood of damage to any flight equipment.

3.2.4 Power Characteristics

The subsystem shall operate per the performance requirements specified herein when supplied power as specified in 3.1.2.2.1.

3.2.5 Power Usage

The GN&CS shall draw power only within the bounds indicated in Table IX:

Table IX. Power Resource Allocation

Spacecraft Mode	Minimum (W)	Maximum (W)
Ground Test	73.9	104.8
Survival	98.8	200
Delta–V	98.8	200
Standby	200	200
Science	200	200
Safe	98.8	200

Notes:
1. These powers are orbit average, based on End of Life.
2. Minimum powers represent the minimum orbit average power allocation for that mode, corresponding to minimum capability; and maximum powers represent the maximum orbit average power allocation for that mode, corresponding to maximum capability.

3.2.5.1 Power Exclusion Rules

None

3.2.6 Reliability

The probability of mission success (Ps) for the GN&C shall be at least 0.96 **(TBR–9)** for a five–year mission life. Mission success is defined as meeting all performance criteria specified in Section 3.2.

3.2.6.1 Storage Restrictions

Limited–life components which may require change–out during storage shall be identified and tracked in the Critical Items List, 20008652.

3.2.6.2 Vulnerability Factors

The following steps shall be taken to reduce vulnerability to damage:

Vulnerability	Protective Measure
ESA, SSST, FSS, CSS lens damage	Lens caps
RWA, ESA bearing damage	Handling warnings in I&T procedures

3.2.6.3 Failure Tolerance

[1] The GN&C shall be tolerant of any single credible, hard failure, including a failure in the EAS harness servicing the GN&CS.

[2] No failure shall induce any other failure.

[3] After any single GN&CS failure, the GN&CS shall continue to provide at least the minimum services identified for Safe Mode in 3.2.1.3.4 without any interruptions which may threaten the survival of any Spacecraft component or instrument.

3.2.6.4 Failure Propagation Restrictions

[1] No single failure shall cause loss of a redundant functional path for any critical function.

[2] nor shall any event causing the loss of any critical or non–critical functional path result in loss of the alternate or redundant path.

[3] The GN&C shall insure that no instrument or component failures may propagate failures to other observatory elements. This shall be accomplished by compliance with the electrical interface requirements of IS20008501 and by autonomously falling back to Safe Mode upon autonomous detection of a potentially dangerous attitude anomaly.

3.2.7 Environmental Conditions

[1] The GN&C components shall remain undamaged during,

[2] and following exposure to the protoflight environmental test levels corresponding to the ambient environments defined in IS20008501 Section 6.

[3] The GN&CS and its components shall remain undamaged during,

[4] and following exposure to the acceptance environmental test levels corresponding to the ambient environments defined in IS20008501 Section 6.

[5] Test levels shall be as defined in the Verification Specification, PS20005405.

[6] Damage shall be as defined in Section 3.2.3.2.

[7] Where practical, the GN&CS shall not impose operational constraints due to natural environment conditions during checkout, launch, and on–orbit operation.

3.2.7.1 Storage, Integration and Test

The GN&CS shall be capable of being held for testing or storage for the period defined in IS20008501 Section 6, under the pre–launch conditions stated there for (1) thermal, (2) contamination, (3) humidity, and (4) electro–magnetic interference (EMI) without suffering any damage as defined above.

3.2.7.2 Shipment

The GN&CS shall comply with by the following transportation environmental requirements as defined in IS20008501 Section 6:

a. thermal

b. contamination

c. humidity

d. EMI

e. loads

f. shock.

The platform is assumed to be horizontal for all flight transportation and either horizontal or vertical for all ground transportation.

3.2.7.3 Launch

The GN&CS shall comply with the following launch environmental requirements as defined in IS20008501 section 6: (Any exceptions to this specification are identified in the GN&C component specification.)

a. thermal

b. contamination

c. Radiated RF

d. EMI

e. loads

f. shock

g. pressure

h. acoustic vibration

i. lightning

j. cosmic ray.

3.2.7.4 On–Orbit

The GN&CS shall comply with the following on–orbit environmental requirements as defined in IS20008501 Sections 5 and 6: (Any exceptions to this specification are identified in the GN&C component specification.)

a. thermal

b. contamination

c. pressure

d. EMI

e. loads

f. shock

g. orbital debris

h. micrometeoroids

i. vibration

j. charged particle

k. atomic Oxygen

l. magnetic

m. electro–static discharge.

3.2.7.5 Electromagnetic Radiation

[1] The GN&CS shall be compatible with its specified operating environment and meet the requirements of the Spacecraft, as specified by the EMC control Plan, PN20005869.

[2] The GN&CS and its components shall comply with the ionizing radiation design requirements specified in the environments section of IS20008501

3.3 Design and Construction

3.3.1 Materials, Processes, Parts and Finishes

All materials, manufacturing processes, parts and finishes shall be selected in accordance with the corresponding requirements in Section 4 of IS20008501

3.3.2 Nameplates and Product Marking

All GN&C elements shall be labeled in accordance with IS20008501.

3.3.3 Workmanship

Workmanship during fabrication of the GN&C electrical components shall be in accordance with NASA standards as specified in NHB 5300.4 (3A, 3G–3K).

3.3.4 Interchangeability

GN&C elements shall be interchangeable as defined in the mechanical section of IS20008501

3.3.5 Safety

Measures for personnel safety shall be taken in all phases of the design, manufacturing, and testing, in order to ensure personnel safety in accordance with WSMCR 127–1, The design shall meet the factors of safety presented in the mechanical section of IS20008501

The GN&CS shall meet the requirements of the Safety section of the Product Assurance Implementation Plan (PAIP), 20005397, without exceptions.

3.3.5.1 General

Where practical, hazards shall be eliminated or removed through appropriate design measures. Hazards which cannot be eliminated or removed shall, where practical, be prevented through incorporation and use of safety devices or features. Remaining hazards shall be controlled through the use of warning devices and/or special procedures.

3.3.5.2 Automatic Hazard Detection and Safing

Automated detection and safing of hazards which may cause personnel injury or loss of the Spacecraft shall be independent of those subsystems being monitored. Where practical, the detection and safing of lesser hazards shall also follow this practice.

3.3.5.3 Safety Interlock Mechanisms/Techniques

The Spacecraft Bus shall incorporate safety interlock mechanisms, implemented in hardware or software to prevent the execution of pre–defined commands which are potentially hazardous to personnel or to the Spacecraft without prior confirmation or arming by ground operators.

3.3.5.4 Liquids and Gasses

The design of subsystems and components which utilize liquids or gasses shall preclude hazards due to the release of such fluids during maintenance operations.

3.3.5.5 Pressurized Vessels

The GN&CS includes the following pressurized elements, each of which shall be designed to include the pressurized equipment factors of safety specified in Section 4 of the GIS, IS20008501: none.

3.4 Documentation

3.4.1 Specifications

All parent and component specs associated within this specification are shown in the EOS–AM Spacecraft Specification Tree, 20008536.

3.4.2 Drawings

Drawings shall be provided in accordance with the EOS Configuration Management Plan, 20005387.

3.4.3 Technical Manuals

Not Applicable.

3.4.4 Test Plans

Test Plans shall be provided in accordance with PS20005404 (EOS Verification Specification).

3.4.5 Procedures

Test Plans shall be provided in accordance with PS20005404 (EOS Verification Specification).

3.4.6 Installation Instructions

Not Applicable.

3.4.7 Operational Documentation

All operational requirements and constraints shall be documented in the Ground System Requirements Database, 20043119.

3.4.8 Software Documentation

All Computer Software Configuration Items (CSCIs) will be documented as specified in the software Management Plan, 20008655

3.5 Logistics

3.5.1 Maintenance

The GN&CS shall be designed to require no maintenance other than that required during long periods of storage as specified in Paragraph 3.2.7.1 herein.

3.5.2 Supply

Not Applicable.

3.6 Precedence

3.6.1 Precedence of Design Criteria

GN&C design decisions shall be made to accommodate the following design criteria in the following order of precedence:

a. Safety

b. Performance

c. Reliability

d. Cost

3.6.2 Documentation Precedence

The following documents shall form a part of this specification to the extent specified herein. If conflicts arise between documents, the GN&CS shall adhere to design requirements as stated in the document list nearest the top of the following list of required documents.

a. Requirements Document (RD)

b. Product Assurance Requirements for the EOS Observatories (PAR)

c. General Instrument Interface Specification (GIIS)

d. Verification Specification

e. Contract End Item (CEI) Specification

f. External Interface Control Documents (ICDs), (e.g., EOS to Launch Vehicle, EOS to TDRSS, etc)

g. this document

h. General Interface Specification (GIS)

i. Subsystem and Major Assembly Specifications

j. Component specifications.

3.7 Major Component Characteristics

3.7.1 Allocations

The GN&C components shall be designed to levels at or below the allocation shown in Table X.

Table X. Component Requirement Allocations

Component	Size (in., L x W x H)	Mass (lbs)		Orbit Avg. Power, EOL[1] (W)		Voltage (V)	Ps @ 5 yrs.
		Per Unit	Total	Per Unit	Total		
Attitude Control Electronics (ACE) (1 redundant unit)	18 x 13.3 x 10.25	48.8	48.8	48.3	48.3	120 & 28	0.98
Coarse Sun Sensor Assembly (CSS) (1 redundant unit)	–	2.65	2.65	0	0	N/A	0.99
Earth Sensor Assemblies (ESAs) (2 units)	7.0 x 7.9 x 4.3 (electr.); 5.0 x 3.0 dia. (head)	7.7	15.4	10.5	21.0	28	0.99

Table X. Component Requirement Allocations (Continued)

Component	Size (in., L x W x H)	Mass (lbs)		Orbit Avg. Power, EOL[1] (W)		Voltage (V)	Ps @ 5 yrs.
Fine Sun Sensor (FSS) (1 unit)	7.8 x 6.0 x 2.0 (electr.); 3.3 x 4.3 x 1.7 (head)	3.3	3.3	2.8	2.8	28	0.99
Inertial Reference Unit (IRU) (1 redundant unit)	13.2 x 10.7 x 10.5	37.5	37.5	28.0	28.0	28	0.93
Magnetic Torquer Rods (MTRs) (3 redundant units)	44 x 2.2 dia.	31.5	94.5	2.52(1) 1.26(2)	5.04	28	0.99
Reaction Wheel Assemblies (RWAs) (4 units)	16 dia.	31.6	126.4	15.75	63.0	120	0.98
Solid–State Star Trackers (SSSTs) (2 units)	8 x 8 x 28	22.0	44.0	13.0	26.0	28	0.98
Three–Axis Magnetometers (TAMs) (2 units)	5.6 x 6.5 x 2.1 (electr.); 4.7 x 2.8 x 2.8 (head)	2.7	5.4	1.9	1.9	28	0.99

1 Table VII defines which of the GN&CS components shall participate in each GN&C mode. Each GN&C mode which employs the SSST, ESA, TAM, RWA, MTR, shall employ up to all of the redundant units in the aforementioned list. That shall include both redundant sides of the MTRs.

2 Each redundant side of each MTR

3.7.2 Flight Hardware Component Characteristics

3.7.2.1 Attitude Control Electronics (ACE)

3.7.2.1.1 ACE Definition

The ACE shall house the Safe Mode Flight Software in the Safe Hold Data Processor (SHDP). In Safe Mode the ACE hardware and the Safe Mode Flight Software shall control Spacecraft attitude. In addition, in all modes, the ACE hardware shall perform support functions for GN&CS sensors and effectors.

The ACE shall maintain the Safe Hold Data Processor memory loads, which are the memory loads critical to Spacecraft survival, in non–volatile storage for use in initiation or restoration of operations after anomalies.

3.7.2.1.2 ACE Modes and Functional Requirements

The ACE shall operate in one of two mutually exclusive modes: Spacecraft Computer Mode and Safe Mode. Within each above mode, the ACE shall operate in one of two submodes: Separated (i.e., from the launch vehicle) and Not Separated. The functional requirements on the ACE depend upon ACE mode. The ACE functional requirements shall correlate with ACE modes as defined in Table XI.

Table XI. ACE Modes and Functions

Function	Spacecraft Computer Mode – Not Separated	Spacecraft Computer Mode – Separated	Safe Mode – Not Separated	Safe Mode – Separated
Accept Separation signal from launch vehicle & switch to Separated submode; no command override	Active	Active	Active	Active
In absence of Separation signal, accept commands from BDU to switch between Not Separated and Separated submodes	Active	Active	Active	Active
Accept from BDU a command selection of sensors & effectors to use in Safe Mode	Active	Active	Active	Active
Collect IRU Δø pulses and pass Σ(IRU Δø pulses) to BDU – functional data	No requirement	Active	No requirement	Active
Collect IRU rates	No requirement	Active	No requirement	Active
Pass IRU rates to BDU – housekeeping analog telemetry	No requirement	No requirement	No requirement	Active
Pass IRU rates to SHDP	No requirement	No requirement	No requirement	Active
Electrical power to RWA tachometers	No requirement	Active	No requirement	Active
Collect RWA tachometer pulses	No requirement	Active	No requirement	Active
Σ(RWA tachometer pulses) to BDU – functional data	No requirement	Active	No requirement	No requirement
Σ(RWA tachometer pulses) to SHDP – functional data	No requirement	No requirement	No requirement	Active

Table XI. ACE Modes and Functions (Continued)

Function	Spacecraft Computer Mode – Not Separated	Spacecraft Computer Mode – Separated	Safe Mode – Not Separated	Safe Mode – Separated
Σ(RWA tachometer pulses) to BDU – housekeeping analog telemetry	No requirement	No requirement	No requirement	Active
Electrical power to TAMs	No requirement	Active	No requirement	Active
Collect TAM data; pass to SHDP	No requirement	No requirement	No requirement	Active
Accept RWA torque commands from BDU and output torque drive to RWAs	Disabled	Active	Disabled	Disabled
Accept RWA torque commands from SHDP and output torque drive to RWAs	Disabled	Disabled	Disabled	Active
Accept MTR drive commands from BDU and output drive current to MTRs	Disabled	Active	Disabled	Disabled
Accept MTR drive commands from SHDP and output drive current to MTRs	Disabled	Disabled	Disabled	Active
Accept thruster fire commands from SHDP and output to PMEA	Disabled	Disabled	Disabled	Active if pre–selected by command; otherwise disabled
Monitor "SCC OK" pulse train from BDU and switch to Safe Mode if pulse train stops	Disabled	Active	Disabled	Active
Accept BDU commands to force transitions between Spacecraft Computer Mode and Safe Mode	Disabled	Active	Disabled	Active
Pass Safe Mode signal to ADE and PMEA	Disabled	Disabled	Active	Active
Collect CSS angles data and pass to SHDP; pass CSS Pitch data to SADE	No requirement	Active if pre–selected by command; no requirement otherwise	No requirement	Active if pre–selected by command; no requirement otherwise

Table XI. ACE Modes and Functions (Continued)

Function	Spacecraft Computer Mode – Not Separated	Spacecraft Computer Mode – Separated	Safe Mode – Not Separated	Safe Mode – Separated
Collect CSS angles data & pass to BDU as housekeeping telemetry	No requirement	Active	No requirement	Active
Accept Index signal from ADE and pass to SHDP	No requirement	No requirement	No requirement	Active if pre–selected by command; no requirement otherwise
Collect ESA angle data and pass to SHDP	No requirement	Active if pre–selected by command; no requirement otherwise	No requirement	Active if pre–selected by command; no requirement otherwise
Use pre–selected sensors with pre–selected effectors to point the spacecraft at the pre–selected target (the sun if pre–selected sensor is CSS, the earth otherwise)	Disabled	Disabled	Disabled	Active

3.7.2.1.3 ACE Sensor Signal Processing

ACE sensor signal electronics shall be provided to:

a. Condition, count, and store IRU incremental angle pulses, and provide them to the BDU as serial digital data upon request.

b. Condition redundant IRU Rate analog signals, provide buffered analog telemetry outputs to the BDU and provide buffered outputs to the SHDP electronics for use in the Safe Mode control algorithms.

c. Condition redundant Earth Sensor analog position and provide buffered outputs to the SHDP electronics for use in the Safe Mode control algorithms.

d. Condition redundant Coarse Sun Sensor analog signals, provide buffered analog telemetry outputs to the BDU and provide buffered outputs to the SHDP electronics for use in the Safe Mode control algorithms. The ACE shall also provide buffered outputs to the Array Drive Electronics for use in pointing the Solar Array in Earth Pointing Safe Mode.

e. Condition Three–Axis Magnetometer analog field strength measurements and provide buffered outputs to the SHDP electronics for use in the Safe Mode momentum unloading algorithms.

f. Condition, count, and store RWA pulses, provide them to the BDU as serial digital data upon request (when not in a Safe Mode), and provide digital RWA speed data to the SHDP electronics for use in the Safe Mode momentum unloading algorithms.

3.7.2.1.4 ACE RWA Torque Command Processing

The ACE shall accept digital RWA torque commands from the BDU (when not in Safe Mode) or the SHDP (when in Safe Mode), D/A convert them, and provide drive signals to the four RWAs.

3.7.2.1.5 ACE PMEA Command Processing

In the Safe Mode the ACE shall have the capability to command thruster firings by the Propulsion Module Electronics Assembly (PMEA). Thruster firings shall be commanded by the SHDP as required by its control and momentum unloading algorithms.

The ACE shall generate a signal to the PMEA to define when the GN&C subsystem is in a Safe Mode. When this signal is active the PMEA will accept thruster firing commands only from the ACE.

3.7.2.1.6 ACE–ADE Signal Processing

The ACE shall provide buffered Coarse Sun Sensor (pitch Channel) outputs to the Array Drive Electronics for use in pointing the Solar Array in Earth Pointing Safe Mode.

In the Sun pointing Safe Mode the ACE shall accept a Solar Array Drive Index signal denoting that the array has reached its index position. On receipt of the index signal the SHDP shall execute its Sun Pointing Safe Mode control algorithm. The ACE shall have the capability to override the "at index" signal.

3.7.2.1.7 ACE MTR Command Processing

The ACE shall accept digital Magnetic Torquer Rod (MTR) current commands from the BDU (when not in Safe Mode) or the SHDP (when in Safe Mode), D/A convert them, and provide drive signals to the three MTRs (6 coils).

The ACE shall provide telemetry of the MTR currents to the BDU.

3.7.2.1.8 ACE Safe Mode Requirements

The ACE shall implement the Safe Mode requirements defined in Paragraph 3.2.1.3.4.

3.7.2.1.9 ACE Safe Hold Data Processor Requirements

The SHDP shall implement the algorithms for controlling the Spacecraft when in any of the Safe Modes. The SHDP accuracy requirement as allocated from the subsystem requirements defined in Paragraph 3.2.1.4.4 is as follows: **(TBD–1)**

The SHDP shall implement algorithms for unloading RWA momentum in accordance with Paragraphs 3.2.1.6.2 and 3.2.1.6.3.

3.7.2.2 Coarse Sun Sensor (CSS)

3.7.2.2.1 CSS Definition

The CSS shall consist of a set of five sensor units, each containing multiple solar detectors. Four of the sensor units shall reside on the Solar Array, and the fifth on the Spacecraft body. The CSS shall provide a measurement of the Sun vector in the Spacecraft coordinates, for use in Safe Mode.

The CSS mounting locations and orientations shall conform to ICD20008669.

3.7.2.2.2 CSS Modes and Functions

The CSS shall operate in a single mode, independent of GN&CS modes. The ACE shall control the application of the CSS output signals, as specified in 3.7.2.1. The CSS functions are specified below.

The CSS shall provide signals representing the angular orientation of the Sun about the Solar Array Y Axis as defined in 3.2.1.1.6. These signals shall be designated Pitch. In addition, when the Solar Array rotation angle with respect to the Spacecraft is +90° as defined in 3.2.1.1.6, the CSS shall provide signals representing the angular orientation of the Sun about the Spacecraft Z Axis, as defined in 3.2.1.1.3. These signals shall be designated Yaw. There shall be no requirements on the CSS for Yaw signals at other angular orientations of the Solar Array.

3.7.2.2.3 CSS Redundancy and Interconnection

Each Solar Array–mounted unit shall consist of eight detectors and passive thermal coverings. The detectors shall provide signals to redundant channels about each of two orthogonal axes. The EAS harness will interconnect the four Solar Array–mounted units to form redundant Pitch signals, and will connect them via the SMS SAD to the ACE.

The Spacecraft body–mounted unit shall contain two detectors which provide signals to redundant Yaw channels. The EAS harness will interconnect the four Solar array–mounted units to form redundant Yaw channels, and will connect them via the SMS SAD with the redundant signals from the Spacecraft body–mounted unit, internal to the ACE.

3.7.2.2.4 CSS Performance

The CSS shall meet the performance requirements listed below:

Detector field of view	Pitch ±180° when the control plane is within 50° of the sun line Yaw ±180° when the control plane is within 70° of the sun line.
Output data	±900 microamperes in pitch ±1400 microamperes in yaw

Linear range	±25° pitch, 15.4 ±2.3 microamperes per degree ±17° yaw, 15.4 ±2.3 microamperes per degree
Extended range	±180° each axis
Sensor noise	<3 microamperes

3.7.2.3 Earth Sensor Assembly (ESA)

3.7.2.3.1 ESA Definition

The ESA shall be a conical scanning Earth horizon sensor that provides pitch and roll attitude indications relative to the local geocentric vertical. It comprises an infrared horizon sensor consisting of a sensor head and an electronics unit. The optical field–of–view of the ESA scans in a conical pattern about its axis of rotation (scan axis). The GN&CS shall include two ESAs, whose mounting and orientation shall be as specified in ICD20004937.

3.7.2.3.2 ESA Functions

The ESA shall provide analog signals to the ACE and to the BDU representing two–axis angle errors from local vertical. The EPS PSU will provide electrical power to the ESA.

3.7.2.3.3 ESA Performance

The ESA performance requirements in ON mode shall be as specified below:

Scan Frequency	2 Hz
Two–axis conical scanner	
Analog output ranges (linear)	
ACE	±25°
Fine Attitude TLM	±5°
Coarse Attitude TLM	±50°

Accuracy ±0.35 (for ±3.0° around null)

Minimum acquisition FOV 20° off vertical at 300 Km

Nominal operating altitude 718 Km

Launch operating altitude 550 to 700 Km

Includes sun and moon rejection circuitry

3.7.2.4 Fine Sun Sensor (FSS)

3.7.2.4.1 FSS Definition

The FSS provides a measurement of the Sun vector in the Spacecraft coordinates. The assembly consists of a single two–axis sensor head and it associated electronics. Each unit consists of four detector channels (Sun detectors with buffer amplifiers), an active redundant temperature controller with heaters, and passive thermal coverings. The FSS shall be mounted as specified in PS20001407 and its field of view shall conform to ICD20004937.

3.7.2.4.2 FSS Functions

The FSS shall provide two–axis sun angles to the BDU. The EPS PSU will provide electrical power to the FSS.

3.7.2.4.3 FSS Performance

The FSS performance requirements in ON mode shall be as specified below:

Measurement Range	±32° azimuth and elevation
Resolution	1/256° per axis
Accuracy	1 arc minute per axis for angles inside a half cone of 30° from the sensor boresight 2 arc minutes per axis for angles outside a half cone of 30° from the sensor boresight

3.7.2.5 Inertial Reference Unit (IRU)

3.7.2.5.1 IRU Definition

The IRU consists of three identical but functionally separated two–degree–of–freedom rate integrating gyros. Each of the three identical but functionally separated gyros shall provide angular rate and incremental position information in two orthogonal sensing axes. The ensemble of three gyros shall provide redundant sensing about each of three orthogonal axes. The outputs of the IRU support a number of attitude–determination functions as defined in 3.2.1.3. The IRU shall be mounted as specified in PS20001407.

3.7.2.5.2 IRU Modes and Functions

The IRU shall have the following modes:

a. Gyro A Low Rate

b. Gyro A High Rate

c. Gyro A OFF

d. Gyro B Low Rate

e. Gyro B High Rate

f. Gyro B OFF

g. Gyro C Low Rate

h. Gyro C High Rate

i. Gyro C OFF

Each Gyro that is ON shall provide rate and incremental angle data in two orthogonal axes to the ACE. The designations "IRU1" and "IRU2" herein refer to assignments of the six IRU sensitive axes. One of the axes in Gyro A and both axes in Gyro B shall belong to IRU1. The other axis in Gyro A and both axes in Gyro C shall belong to IRU2. The IRU mounting specified in PS20001407 will align the sensitive axes nominally along the Spacecraft Roll, Pitch, and Yaw axes, as shown below:

Gyro	IRU1		IRU2	
A	Yaw			Roll
B	Roll	Pitch		
C			Pitch	Yaw

The IRU Rate selection shall determine the maximum input rates that the IRU can accommodate. Transitions between high rate mode and low rate mode shall be in response to commands from the BDU. Transitions to and from OFF mode shall be in response to switched power from the EPS PSU which will provide electrical power to the IRU.

3.7.2.5.3 IRU Performance

The ON Mode Channels shall meet the following performance requirements:

Rate Range	±2 deg/sec HIGH ±0.11 deg/sec LOW
Scale Factor	0.8 arc sec per pulse +0.005% HIGH 0.05 arc sec per pulse +0.005% LOW
Linearity	±100 ppm in LOW only
Scale Factor Asymmetry	<50 ppm in LOW only ± 50 ppm over three days LOW
Incremental Acceleration Insensitive Drift Rate (AIDR):	
Environmental Stability	0.03 arc sec/sec LOW
Short Term Stability	0.003 arc sec/sec peak to peak
Long Term Stability	0.03 arc sec/sec HIGH 0.02 arc sec/sec LOW
Noise Equivalent Angle	<10.0 arc sec HIGH <1.0 arc sec LOW
Analog Rate Range	±2 deg/sec

Analog Scale Factor	6 V/deg/sec + 0.3 V/deg/sec
Analog Scale Factor Linearity	±10%
Incremental Acceleration Insensitive Drift Rate (AIDR):	
Absolute Value	4.0 arc sec/sec HIGH 4.0 arc sec/sec LOW
Long Term Stability	0.2 arc sec/sec HIGH 0.1 arc sec/sec LOW
Analog Noise	
0.01 to 7 Hz	<0.5 arc sec/sec rms
0.01 to 1.0 Hz	<0.05 arc sec/sec rms

3.7.2.6 Magnetic Torquer Rod (MTR)

3.7.2.6.1 MTR Definition

The MTR shall provide the necessary magnetic torques to remove angular momentum stored in the RWAs. The MTR shall consist of two redundant coils wound on a single magnetic core. The GN&CS shall include three MTRs, mounted orthogonally as specified in ICD20004937.

3.7.2.6.2 MTR Functions

The MTR shall exhibit magnetic dipole strength as a function of the total current in the two windings.

3.7.2.6.3 MTR Performance

The MTR shall meet the following performance requirements:

Magnetic Dipole Moment	500,000 pole centimeter (PC)
Scale Factor	
–450,000 to 450,000	2900 PC/mA ± 10% (1 coil) 5800 PC/mA ± 10% (2 coils)
Dipole change with Temp.	<±4%
Residual Magnetic Dipole	≤2500 PC

3.7.2.7 Reaction Wheel Assembly (RWA)

3.7.2.7.1 RWA Definition

The RWA shall consist of a motor, wheel inertia, and associated electronics. Its function shall be to develop reaction torques and store angular momentum. The GN&CS shall include four RWAs. The RWAs wheel spin axes shall be mounted such that they produce an equal magnitude of torque

and momentum along the spacecraft X and Z axes. The RWAs orientation shall be symmetric about the Spacecraft +Y (pitch) axis. The elevation angle of the RWA rotation axes from the XZ (roll/yaw) plane shall be 25°. They shall be mounted as shown in PS20001409.

3.7.2.7.2 RWA Functions

The RWA shall develop torques in accord with analog commands from the ACE. The RWA shall provide a tachometer pulse train to the ACE whose frequency is proportional to RWA speed. The EPS will provide 120 V electrical power for all but the tachometer circuits, which the ACE shall supply. The RWA shall provide on/off status to the ACE.

3.7.2.7.3 RWA Performance

The RWA shall meet the following performance requirements:

Nominal Momentum	60 ft–lb–sec
Torque Capability at wheel speeds <5400 rpm	0.22ft–lb
0.22 ft–lb Rotating Mass inertia	0.103 sl–ft^2
Tachometer pulse rate	80 pulses/rev

3.7.2.8 Solid State Star Tracker (SSST)

3.7.2.8.1 SSST Definition

The SSST is a fixed, non–gimballed sensor that shall provide star position and star magnitude data. The GN&CS contains two SSSTs, mounted as shown in PS20001407, with fields of view as shown in ICD20004937.

3.7.2.8.2 SSST Modes and Functions

The SSST shall have the following modes:

a. Commanded Self–Test

b. Simulation

c. Star Acquisition

d. Star Track

In Commanded Self–Test Mode the SSST shall execute a self–test routine and report its results to the BDU.

In Simulation Mode the SSST shall output predetermined, simulated star data to the BDU.

In Star Acquisition Mode the SSST shall break track of the current star, and accept designation data from the BDU defining the angular region in which to search for a new star and the magnitude of the new star.

In Star Track Mode the SSST shall maintain track of the star and periodically report its two–axis angular position and its magnitude to the BDU.

The BDU will provide a periodic "Start Integration" pulse at all times, independent of SSST mode. The SSST shall ignore this pulse in all modes except Star Track Mode and Simulation Mode. In Star Track Mode the SSST shall respond to the pulse by starting its integration function on the currently–tracked star. At a predetermined time later, the angular coordinates of the star shall be available at the output interface to the BDU. The coordinates shall fix the centroid of the angular region that the star occupied during the integration. In Simulation Mode the SSST shall provide simulated star coordinates consistent with the same timing relationships as in Star Track Mode.

All of the SSST modes shall be mutually exclusive. The SSST shall switch between modes in response to commands from the BDU, except for the switch into Star Track Mode. The SSST shall execute that switch autonomously from the Star Acquisition Mode. The EPS PSU will provide electrical power to the SSST.

3.7.2.8.3 SSST Performance

The SSST shall meet the following performance requirements:

Total Field of View	63 square° min 7° each axis
Acceptable Target Stars Brightness	+5.7 to 2.0 Mv
Positional Accuracy	<10 arc sec 3σ 2.0 to 4.0 Mv <16 arc sec 3σ 4.0 to 5.7 Mv
Magnitude Accuracy	±0.25 Mv 2.0 to 4.0 Mv ±0.5 Mv 4.0 to 5.7 Mv
Noise Equivalent Angle	<3 arc sec 1σ 2.0 to 4.0 Mv <5 arc sec 1σ 4.0 to 5.7 Mv
Period of "Start Integration" pulse from BDU	128 milliseconds
Center of integration interval	**(TBD–2)** (<64 milliseconds) ± 0.5 milliseconds after the "Start Integration" pulse
Time delay between center of integration interval and availability of data at the output interface to the BDU	**(TBD–3)** (<250 milliseconds) ± 1 millisecond

3.7.2.9 Three–Axis Magnetometer (TAM)

3.7.2.9.1 TAM Definition

The TAM consists of a sensor unit and a separate packaged electronics unit that develops output signals proportional to the ambient magnetic field. The output consists of the three orthogonal components of the ambient magnetic field vector to be used by the magnetic momentum unloading law. The GN&CS includes two TAMs, mounted so that their sensing axes are parallel to the Spacecraft control reference axes as shown in PS20001407.

3.7.2.9.2 TAM Functions

The TAM shall provide to the BDU and to the ACE analog signals representing three orthogonal components of magnetic field. The ACE will provide switched electrical power to the TAM.

3.7.2.9.3 TAM Performance

The TAM shall meet the following performance requirements:

Scale Factor	2.5±1% VDC per 1000 milligauss between ±1000 milligauss LOW 10.0±1% VDC per 1000 milligauss between ±1000 milligauss HIGH
Resolution	4 milligauss
Linearity	±0.2% of full scale
Output Ripple	10 mv RMS LOW 40 mv RMS HIGH
Noise	7 Mv LOW 0 to 100 Hz 28 Mv HIGH to 100 Hz

3.7.3 Guidance, Navigation, and Control (GN&C) Subsystem Software Requirements

The material in this section also appears in PS20004937, Performance Specification for Guidance, Navigation and Control. The requirements for those portions of the GN&C subsystem that are implemented as Flight Software are defined in PS20004937. In the event of conflict between the text of this document (PS20008662) and that of PS20004937, the governing document shall be PS20004937.

3.7.3.1 GN&C Software External Interfaces

The C&DHS shall provide an estimate of UTC time accurate to ±100 microseconds.

C&DHS shall provide the communications medium between the GN&CS Flight Software, exclusive of the Safe Mode software, and all the Spacecraft components with which the GN&C Flight Software interacts. The medium will consist of the Command and Telemetry (C&T) Bus, associated Bus Data Units (BDUs), and Remote Terminals (RTs) embedded in certain components, as defined in IS20008501. The C&T Bus is a bi–directional serial data channel whose use must be time shared. The GN&C Flight Software shall accommodate the traffic allocation defined below.

The C&DHS will allocate a periodic time slot for each transaction between a BDU and a Spacecraft component. The C&DHS will also provide a periodic synchronization message to each RT. The GN&C Flight Software shall accommodate the following timing stabilities: At the interface between the BDU and the Spacecraft component, the BDU actions will take place at times that are fixed ±0.1 milliseconds, relative to a time base proportional to the integrated phase of the COMS Master Oscillator 5 MHz signal. The synchronization signal to the RTs will be phased to within ±0.05 milliseconds of the aforementioned time base.

C&DHS interface timing is defined in 8–millisecond minor cycles, numbered from 0 through 127. The GN&C Flight software shall accommodate the allocation depicted in Table XII to collect measurement data. The GN&C Flight Software shall accommodate the allocation depicted in Table XIII to distribute commands.

3.7.3.2 Attitude Determination and Control (ADAC) Software

3.7.3.2.1 ADAC Mode and Sequence Control

The ADAC Mode and Sequence Control shall perform the following modes:

a. Earth Acquisition Mode

b. Normal Mode

c. Orbit Adjust Mode.

3.7.3.2.1.1 Earth Acquisition Mode

[1] The FSW shall respond to the Separation flag to enter Earth Acquisition Mode, assigning sensors and effectors as required to acquire the local vertical (Local Vertical Acquisition submode), and to acquire yaw (Yaw Acquisition submode).

[2] The FSW shall respond to the command to enter Update Filter submode, assigning sensors as required to acquire a stellar–inertial attitude reference.

3.7.3.2.1.2 Normal Mode

[1] The FSW shall respond to the commands to enter Normal Mode, acquire an inertial attitude reference (Stellar Acquisition), and use the Update Filter output as the attitude reference.

[2] The FSW shall respond to the command to enter Update Filter Earth Pointing submode (upon convergence of the Update Filter).

[3] While in Update Filter Earth Pointing submode, the FSW shall respond to commands to offset–point the Spacecraft (Update Filter Offset Pointing submode).

3.7.3.2.1.3 Orbit Adjust Mode

[1] The FSW shall respond to commands to enter Orbit Adjust mode.

[2] The FSW shall support the capability to maintain three–axis control (with pointing offset capability) of the Spacecraft during orbit acquisition burns, during periodic drag make–up burns, and during inclination correction burns; and, upon termination of the maneuver, return to the previous GN&CS mode.

[3] The FSW shall support the capability to slew to any yaw angle prior to the start of the maneuver.

[4] At the end of a ΔV sequence, the FSW shall autonomously return to the previous mode.

[5] If the previous mode was Normal Mode, the FSW shall return to the Stellar Acquisition submode.

Table XII. C&DHS Traffic Allocation to Collect Measurement Data for GN&C Flight Software

Component/ location of BDU	Measurement	Data Collection Volume	Repetition Interval, Minor Cycles	Data crosses component–C&DH interface at fixed times relative to start of reference Minor Cycle i in the ranges listed		Time at which complete measurement is available to GN&C Flight Software, relative to start of reference Minor Cycle i
				After start of Minor Cycle	Before start of Minor Cycle	By start of Minor Cycle
ACE/GN&C EM	IRU Σ ($\Delta\phi$ pulses)	18 bytes	16	i + 0	i + 2	i + 5
ACE/GN&C EM	RWA (tach pulses)	8 bytes	64	i + 0	i + 2	i + 5
SSST1/SSST1[1]	star fixes	54 bytes	1,280	i + 34	i + 38	i + 41
SSST2/SSST2[2]	star fixes	54 bytes	1,280	i + 37	i + 41	i + 44
ESA1/EPS EM	E&H error	4 analogs	64	i + 0	i + 1	i + 4
ESA2/EPS EM	E&H error	4 analogs	64	i + 0	i + 1	i + 4
FSS/EPS EM	Sun angles	4 bytes	64	i + 0	i + 1	i + 4
TAM1/GN&C EM	Field strength	3 analog	64	i + 0	i + 1	i + 4
TAM2/GN&C EM	Field strength	3 analog	64	i + 0	i + 1	i + 4
HGA/HGA[3]	Gimbal angles	8 bytes	32	i + 4	i + 5	i + 7

Table XII. C&DHS Traffic Allocation to Collect Measurement Data for GN&C Flight Software (Continued)

Component/ location of BDU	Measurement	Data Collection Volume	Repetition Interval, Minor Cycles	Data crosses component–C&DH interface at fixed times relative to start of reference Minor Cycle i in the ranges listed		Time at which complete measurement is available to GN&C Flight Software, relative to start of reference Minor Cycle i
TDRSS transponder 1/ COMS & C&DHS EM	Dopper cycle count	5 bytes	128	i + 0	i + 1	i + 4
TDRSS transponder 2/COMS & C&DHS EM	Dopper cycle count	5 bytes	128	i + 0	i + 1	i + 4
TDRSS transponder 1/ COMS & C&DHS EM	Ancillary data	5 bytes	128	i + 0	i + 1	i + 4
TDRSS transponder 2/ COMS & C&DHS EM	Ancillary data	5 bytes	128	i + 0	i + 2	i + 5
TDRSS transponder 1/ COMS & C&DHS EM	PN epoch time	5 bytes	1,280	i + 1	i + 2	i + 5

Table XII. C&DHS Traffic Allocation to Collect Measurement Data for GN&C Flight Software (Continued)

Component/ location of BDU	Measurement	Data Collection Volume	Repetition Interval, Minor Cycles	Data crosses component–C&DH interface at fixed times relative to start of reference Minor Cycle i in the ranges listed		Time at which complete measurement is available to GN&C Flight Software, relative to start of reference Minor Cycle i
TDRSS transponder 2/ COMS & C&DHS EM	PN epoch time	5 bytes	1,280	i + 1	i + 2	i + 5
SADE/COMS & C&DH EM	Array angle	1 analog	64	i + 1	i + 2	i + 5

1. SSST[1] contains a Remote Terminal which is functionally equialent to a BDU
2. SSST[2] contains a Remote Terminal which is functionally equialent to a BDU
3. HGA contains a Remote Terminal which is functionally equivalent to a BDU

Table XIII. C&DHS Traffic Allocation to Distribute Commands for GN&C Flight Software

Component/ location of BDU	Command	Command Data Volume	Repetition Interval, Minor Cycles	Data crosses component–C&DH interface at fixed times relative to start of reference Minor Cycle i in the ranges listed		Time at which GN&C Flight Software shall format command, relative to start of reference Minor Cycle i
				After start of Minor Cycle	Before start of Minor Cycle	Not later than start of Minor Cycle
ACE/GN&C EM	RWA Torque	4 16–bit words	64	i + 0	i + 1	i – 4
ACE/GN&C EM	MTR drive	3 16–bit words	64	i + 1	i + 2	i – 3
SSST1/SSST1[1]	Acquisition	21 16–bit words	640	i + 3	i + 7	i – 1
SSST2/SSST2[2]	Acquisition	21 16–bit words	640	i + 7	i + 11	i +3
HGA/HGA[3]	Drive	4 16–bit words	32	i + 0	i + 1	i – 4
TDRSS transponder 1/ COMS & C&DHS EM	Time of day	5 16–bit words	1,280	i + 0	i + 1	i – 4
TDRSS transponder 2/ COMS & C&DHS EM	Time of day	5 16–bit words	1,280	i + 0	i + 1	i – 4

Table XIII. C&DHS Traffic Allocation to Distribute Commands for GN&C Flight Software (Continued)

Component/ location of BDU	Command	Command Data Volume	Repetition Interval, Minor Cycles	Data crosses component–C&DH interface at fixed times relative to start of reference Minor Cycle i in the ranges listed		Time at which GN&C Flight Software shall format command, relative to start of reference Minor Cycle i
TDRSS transponder 1/COMS & C&DHS EM	Doppler Correction	1 16–bit words	1,280	i + 0	i + 1	i – 4
TDRSS transponder 2/ COMS & C&DHS EM	Doppler Correction	1 16–bit word	1,280	i + 0	i + 1	i – 4
PMEA/PROPS EM	Thruster fire	10 16–bit words, followed by an "execute" pulse	64	i – 2	i + 1	i – 6
SADE/COMS & C&DH EM	Array Drive	1 16–bit word	64	i + 1	i + 2	i – 3

1. SSST[1] contains a Remote Terminal which is functionally equialent to a BDU
2. SSST[2] contains a Remote Terminal which is functionally equialent to a BDU
3. HGA contains a Remote Terminal which is functionally equivalent to a BDU

3.7.3.2.2 Update Filter

[1] Data from the SSST and/or FSS shall be used to estimate and correct attitude determination and gyro bias compensation errors.

[2] The normal mode of the update filter shall employ data from the SSSTs.

[3] Capability shall be provided to process data from the FSS as a backup.

[4] Attitude Determination shall use Navigation System lunar ephemeris data to determine when the moon is in the field of view of a star tracker.

[5] Attitude Determination shall use Navigation System solar ephemeris data for fine sun sensor data processing [(**TBD–4**) – dependent upon accuracy of data].

3.7.3.2.2.1 Update Filter Inputs

a. SSST data

b. FSS data

c. Spacecraft inertial attitude (as derived from integrating the IRU data)

d. Body rates

e. Solar position

f. Lunar position

3.7.3.2.2.2 Update Filter Description

[1] The Update Filter shall be a Kalman filter which shall compute attitude errors using star sensor and sun sensor data, sun position data, and a stored star catalog.

[2] The EOS mission shall require the storage of information on no more than 700 stars in the update filtering star catalog.

[3] The Update Filter software shall provide precession computations on the stellar positions in order to avoid the requirement for frequent uplinking of stellar data.

[4] Star catalog data shall not be used unless it has been verified by the ground (as determined via a verification indicator).

3.7.3.2.2.3 Update Filter Outputs

a. Spacecraft inertial attitude update.

b. Gyro rate bias update.

3.7.3.2.3 Gyro Data Processing

[1] Gyro Data Processing shall perform the following functions:

a. Pre–filter gyro information and convert from raw values to attitude rates.

b. Integrate attitude rates to propagate Spacecraft attitude knowledge.

3.7.3.2.3.1 Gyro Data Processing Inputs

a. IRU $\Sigma(\Delta\phi$ pulses)

b. Spacecraft inertial attitude update.

c. Gyro rate bias update.

3.7.3.2.3.2 Gyro Data Processing Description

[1] Gyro data from the IRU shall be optionally pre–filtered every 0.128 second to remove undesirable aliasing effects which can result from a discrete time control cycle (0.512 sec).

[2] Pre–filtered gyro data shall be converted from raw values to attitude rates every 0.512 seconds.

[3] These attitude rates shall be corrected for gyro misalignments and applied with scale factors.

[4] Bias compensation, including bias error estimates from the Update Filter, shall be applied to the corrected attitude rates.

[5] The corrected attitude rates shall then be integrated to propagate Spacecraft attitude knowledge.

3.7.3.2.3.3 Gyro Data Processing Outputs

a. Inertial Attitude

b. Attitude Rates

c. Ancillary Data for use by payload instruments

3.7.3.2.4 Desired Attitude

[1] The Desired Attitude shall be the zero–reference computed from the Spacecraft position and velocity as determined by the Navigation function plus optional attitude offset.

[2] Attitude Determination and Control shall autonomously transition to the backup EOS ephemeris when Navigation Filters fails to provide an accurate attitude reference.

a. The criteria for transitioning to the backup EOS ephemeris shall be based on a voting scheme among the Navigation System, the ESA, and the backup ephemeris.

b. Transitioning to the use of the backup EOS ephemeris shall not cause entry into Safe Mode.

3.7.3.2.4.1 Desired Attitude Inputs

a. Spacecraft position and velocity

b. Selected offsets

3.7.3.2.4.2 Desired Attitude Description

[1] The Desired Attitude calculation shall provide the capability to define a desired attitude for the Spacecraft.

[2] Capability to support offset pointing and yaw slews shall be provided as detailed below.

[3] The Desired Attitude calculation shall provide the capability to add offsets to the desired attitude in support of instrument calibrations.

3.7.3.2.4.3 Desired Attitude Outputs

a. Desired Spacecraft attitude

b. Desired attitude rates

3.7.3.2.5 Spacecraft Attitude Correction

[1] Spacecraft Attitude Correction shall provide the logic for determining Spacecraft attitude corrections based on the input of Spacecraft attitude error, and rate data.

[2] The Spacecraft Attitude Correction shall then provide torque commands for the RWAs or torque requests to the Thruster Command as appropriate.

3.7.3.2.5.1 Spacecraft Attitude Correction Inputs

a. Attitude rates

b. Inertial attitude

c. Desired spacecraft attitude

d. Slew requests

e. ESA data

f. RWA tachometer data

g. Magnetic torque compensation signal

h. HGA motion compensation signal

3.7.3.2.5.2 Spacecraft Attitude Correction Description

[1] Spacecraft Attitude Correction shall determine the roll, pitch, and yaw axis attitude errors (differences between the desired and measured Spacecraft attitudes).

[2] Spacecraft Attitude Correction shall generate reaction wheel commands to implement Spacecraft movement towards the desired attitude.

[3] The selection of sensors and control laws shall be as directed by the GN&C Mode and Sequence Control.

[4] Capability shall be provided to drive the desired attitude to perform the 90 degree and 180 degree yaw maneuvers required for orbit adjust.

[5] Slews shall be performed in conjunction with ΔV maneuvers in response to requests received via stored commands.

[6] Capability shall be provided to apply compensating torques to the reaction wheels to minimize the disturbances due to magnetic unloading, HGA motion, and gyroscopic torques.

[7] In modes requiring thruster control, orthogonal control torque requests shall be provided for the Thruster Command.

3.7.3.2.5.3 Spacecraft Attitude Correction Outputs

a. Reaction wheel commands

b. Orthogonal control torque requests

3.7.3.2.6 High Gain Antenna Control

The High Gain Antenna (HGA) Control determines the HGA azimuth and elevation rotation angles required to point the HGA toward the selected TDRSS Spacecraft and generates the commands to rotate the HGA. The HGA Control also estimates the torque on the spacecraft due to the motion of the HGA; this estimate is used to compensate for the disturbance which would otherwise result.

3.7.3.2.6.1 High Gain Antenna Control Inputs

a. Tracking schedule

b. TDRS ephemerides

c. Spacecraft position

d. Spacecraft inertial attitude

e. HGA gimbal angles.

3.7.3.2.6.2 High Gain Antenna Control Description

[1] The HGA control software shall perform the following functions:

a. Monitor the HGA position and assure that its motion constraints are honored.

b. Monitor the HGA position and provide notification when the HGA points in a direction where RF emissions are not allowed.

c. Determine the command profile to move the HGA to the desired position.

d. Apply rate limits as required to minimize disturbances.

e. Generate the commands to rotate the HGA.

f. Calculate the disturbance torque on the spacecraft that will result from the commanded HGA motion.

[2] FSW shall provide the capability to apply offsets to High Gain Antenna pointing via a command bias.

3.7.3.2.6.3 High Gain Antenna Control Outputs

a. HGA drive commands

b. Flag to inhibit RF transmission

c. HGA motion compensation signal

3.7.3.2.7 Momentum Unloading

[1] The Momentum Unloading shall control unloading of either momentum stored in the reaction wheels or total system Momentum.

[2] Momentum Unloading shall be an independent function which shall be available in any of the GN&C control modes except orbit adjust.

[3] This function shall process inputs to generate commands which will allow the Momentum to be unloaded.

[4] The primary means of unloading momentum utilizes magnetic fields from the Magnetic Torque Rods; however a backup method utilizing thrusters shall also be available. The Momentum Unloading also estimates the torque on the spacecraft due to the magnetic field of the MTRs; this is used to compensate for the disturbance which would otherwise result.

3.7.3.2.7.1 Momentum Unloading Inputs

a. Magnetometer data

b. Reaction wheel tachometer data.

c. Total system momentum.

3.7.3.2.7.2 Momentum Unloading Description

[1] The flight software shall support unloading of the excess momentum stored in the reaction wheels.

[2] There shall be two techniques provided: magnetic unloading for normal operation, and thruster unloading for backup or coping with unexpectedly high disturbance torques.

[3] When this function is performed during normal Earth pointing using only magnetic torquers, there shall be no adverse effects on the precision pointing accuracies of the Normal Mode.

[4] Magnetic torquer unloading shall be continuous.

[5] The Magnetic Torque Rod commands required to control the angular momentum shall be generated using reaction wheel momentum data, magnetometer data, total system momentum data and momentum bias data.

[6] The Magnetic Torque Rods create torques so that the wheels are required to be driven in a direction to reduce the excess angular momentum stored.

[7] If enabled, thruster unloading shall occur when the momentum of a wheel reaches the specified threshold or when the wheel momentum in the spacecraft body frame reaches a specific threshold.

[8] The appropriate thruster command requests shall be generated using either the reaction wheel momentum data or the wheel momentum resolved into the body frame.

[9] Thruster firings shall occur at the specified rate with each firing reducing wheel momentum in the body frame by a specified percentage.

[10] Thruster unloading shall be completed when the wheel momentum in the body frame reaches a specified limit .

3.7.3.2.7.3 Momentum Unloading Outputs

a. Magnetic torquer commands

b. Magnetic torque compensation signal

c. Thruster unload torque requests

d. Ancillary Data for use by payload instruments

3.7.3.2.8 Solar Array Drive Control

[1] The Solar Array Drive Control shall provide closed–loop control of the solar array position, and shall provide a commandable slew capability.

3.7.3.2.8.1 Solar Array Drive Control Inputs

a. Solar array drive position data

b. Solar position

c. Inertial attitude

3.7.3.2.8.2 Solar Array Drive Control Description

[1] The Solar Array Drive Control shall perform the following functions:

a. Read the solar array potentiometer position and transform the current solar array position into Spacecraft coordinates.

b. Command the solar array either with a constant rate uplinked from the Ground Segment or

c. Calculate the required array position from the sun position input and adjust the commanded rate to track the sun.

d. Command slews as required.

[2] FSW shall provide the capability to apply offsets to Solar Array pointing via a commanded bias..

3.7.3.2.8.3 Solar Array Drive Control Outputs

a. Solar Array Drive Rate Commands

3.7.3.2.9 Thruster Command

3.7.3.2.9.1 Thruster Command Inputs

a. Delta–V requests

b. Orthogonal control torque requests

c. Thruster unload torque requests

3.7.3.2.9.2 Thruster Command Description

[1] The Thruster Command shall compute thruster on–times for all ΔV maneuvers. These on–times include ΔV firing and attitude control firing.

[2] The thruster commands for ΔV burns shall be based on requests received via stored commands.

[3] The Thruster Command shall select appropriate combinations of thrusters and compute thruster on–times for attitude control based on orthogonal control torque requests from Spacecraft Attitude Correction.

[4] The Thruster Command shall compute thruster on–times for Spacecraft slew maneuvers, including those required for earth acquisition based on orthogonal control torque requests from Spacecraft Attitude Correction.

[5] The Thruster Command shall select appropriate combinations of thrusters and compute thruster on–times for backup momentum unloading based on thruster unload requests from Momentum Unloading.

3.7.3.2.9.3 Thruster Command Outputs

a. Delta–V Thruster on–time commands

b. Attitude Control Thruster on–time commands

3.7.3.2.10 ADAC Fault Detection Isolation and Recovery (FDIR)

The ADAC Fault Detection Isolation and Recovery (FDIR) software shall provide protection against the first instance of a single point failure which could cause loss of attitude control. The FDIR software shall monitor the status of the GN&C subsystem and command the Spacecraft to a safe configuration which does not use the hardware or software identified to be faulty. The FDIR

software shall report all test failures in SCC telemetry. After providing such protection against the first instance of a single point failure the ADAC FDIR software shall cease operation except as specified herein.

The ADAC FDIR shall be enabled and disabled by ground command.

The ADAC FDIR software shall provide the single–point failure protection defined herein for the GN&CS and related components configured to use the following initial selection from among redundant components:

a. Attitude determination and control as well as FDIR

    1. ACE B
    2. IRU2
    3. ESA2
    4. TAM2
    5. Both windings of each MTR
    6. All four RWAs
    7. Either or both SSSTs, with or without FSS.
    8. EPS BDU B
    9. PROPS BDU B
    10. PMEA2

b. FDIR only

    1. IRU1
    2. ESA1
    3. TAM1.

3.7.3.2.10.1 ADAC FDIR software functions common to all modes other than Safe Mode

The software functions that are common to all GN&C modes except Safe Mode shall:

a. initialize the ADAC FDIR to match the current GN&C mode

b. disable ADAC FDIR if GN&C is in Safe Mode

c. test the health of IRU Gyro A

d. anticipate that other means than FDIR software will invoke Safe Mode; pre–set ACE accordingly to match the current GN&C mode

e. command interchange of redundant sides of the BDU in the EPS Module

f. configure components for Safe Mode after FDIR software invokes entry into Safe Mode.

3.7.3.2.10.1.1 Input to ADAC FDIR common functions

The inputs for the common functions shall be:

a. GN&C mode

b. Gyro A motor current telemetry

c. Safe Mode selection – Earth or Sun pointing

d. Component selection – gyros, ESA, TAM, wheels vs thrusters, MTRs vs thrusters

3.7.3.2.10.1.2 Processing by ADAC FDIR common functions

Common function processing shall:

a. set failure detection thresholds according to current GN&C mode and stored threshold values

b. disable ADAC FDIR if GN&C is in Safe Mode

c. compare Gyro A motor current telemetry with a stored limit and report pass/fail

d. pre–set sensor and effector selections consistent with the current GN&C mode, in ACE B, wheels vs thrusters, MTRs vs thrusters, forward flight vs backward flight pitch rate bias, forward flight vs backward flight yaw gyrocompass position gain, ACE to Earth Pointing vs Sun Pointing, ADE to Earth Pointing vs Inertial, for use in Safe Mode if ACE declares Safe Mode autonomously or if a ground command sets ACE to Safe Mode

e. on first call, command switch to redundant side of the EPS Module BDU and report execution of the first switch; on second call, command switch back to original side of the EPS Module BDU and report execution of the second switch

f. command selection of Earth Pointing vs Sun Pointing, ESA, TAM, gyro, ACE side, wheels vs thrusters, MTRs vs thrusters for use in Safe Mode

3.7.3.2.10.1.3 Outputs from ADAC FDIR common functions

The outputs for the common functions shall be:

a. gyro A pass/fail result

b. command to disable ADAC FDIR

c. sensor and effector presets, Earth Pointing vs Sun Pointing presets, forward vs backward flight pitch rate bias, forward flight yaw gyrocompass position gain to ACE B

d. Earth Pointing vs Inertial Pointing presets to ADE

e. side switch status of EPS Module BDU

f. command to switch sides of ACE

g. commands to powered ACE side selecting Earth Pointing vs Sun Pointing, ESA, TAM, gyro, wheels vs thrusters, MTRs vs thrusters for use in Safe Mode

3.7.3.2.10.2 ADAC FDIR functions in Safe Mode

In Safe Mode invoked by FDIR software, the software shall switch to thruster control if wheel speeds exceed a threshold a pre-set number of times in a row.

3.7.3.2.10.2.1 Inputs to ADAC FDIR functions in Safe Mode

The inputs to the ADAC FDIR software in Safe Mode shall be:

a. GN&C mode status

b. RWA speeds

c. ACE side select status

3.7.3.2.10.2.2 Processing by ADAC FDIR functions in Safe Mode

While in Safe Mode the software shall compare the wheel speeds with a stored limit and shall switch to thruster control when any RWA speed exceeds the limit a pre-set number of times in a row. The software shall turn ON PMEA1, and configure latch valves and catalyst bed heaters for attitude control. It shall command the powered ACE side to thruster control.

3.7.3.2.10.2.3 Outputs from ADAC FDIR functions in Safe Mode

The outputs shall be:

a. command to the powered ACE to switch to thruster control

b. ON command and configuration commands to PMEA1.

3.7.3.2.10.3 ADAC FDIR functions in Acquisition Mode (except for Update Filter Submode) and in Normal – Stellar Acquisition Mode

In GN&C Acquisition Mode (except for Update Filter Submode) and in Normal – Stellar Acquisition Mode, the ADAC FDIR software shall:

a. monitor attitude errors and rates from alternate sources

b. at the first excessive attitude error or rate, as appropriate, command redundancy switching of components, and command entry into Earth Pointing or Sun Pointing Safe Mode

c. at the completion of the functions in b., terminate execution of ADAC FDIR except for that specified in 3.7.3.2.10.2

d. monitor RWA speed change responses to torque commands and compare with stored limits

e. upon detecting RWA speed change response out of limits, as appropriate, command redundancy switching of components, and command entry into Earth Pointing Safe Mode.

3.7.3.2.10.3.1 Inputs to ADAC FDIR functions in Acquisition Mode (except for Update Filter Submode) and in Normal – Stellar Acquisition Mode

The inputs shall be:

a. GN&C mode status

b. IRU rates from all six gyro axes

c. ESA position errors from both ESAs

d. ESA scanner tachometer telemetry from both ESAs

e. ESA wide angle mode vs normal mode status telemetry from both ESAs

f. Update Filter estimates of pitch, roll, & yaw position error, and yaw rate error

g. gyro A current telemetry test status

h. count of EPS BDU primary–redundant side switches

i. RWA torque commands

j. RWA speed telemetry

k. RWA ON/OFF status telemetry

l. RWA ok/failed record for each RWA

m. GN&C BDU A/B select status

3.7.3.2.10.3.2 Processing by ADAC FDIR functions in Acquisition Mode (except for Update Filter Submode) and in Normal – Stellar Acquisition Mode

3.7.3.2.10.3.2.1 Processing by ADAC FDIR functions in Acquisition – Rate Nulling Mode

In Rate Nulling Submode the FDIR software shall expect the ADAC to use the IRU and ESA for attitude determination, and to use thrusters for control.

In Rate Nulling Submode, from Separation to a stored number of seconds after Separation, the FDIR software shall test each IRU2 rate against a stored limit. For each axis where the IRU2 rate exceeds the limit a pre-set number of times in a row, the software shall compare the IRU2 rate with the IRU1 rate, and shall commit to the IRU with the lower rate.

In Acquisition Mode, later than a stored number of seconds after Separation, the FDIR software shall form a "valid Earth presence" logical variable for each ESA. An ESA shall "have valid Earth presence" if the ESA scanner's tachometer telemetry passes a limit test and if the ESA's wide angle/normal mode telemetry indicates normal mode. Otherwise, that ESA shall have "lost the earth".

In Rate Nulling Submode, later than a stored number of seconds after Separation, the FDIR software shall monitor whether each ESA has valid earth presence, it shall test each ESA pitch and roll position errors against stored limits, and it shall test the IRU1 yaw rate against a stored limit.

Upon the failure of any above test associated with pitch or roll a pre-set number of times in a row, the FDIR software shall attempt to identify a suspect component or group of components: ESA1, ESA2, Gyro A, EPS BDU, control. The software shall use ESA1 & 2 error comparisons, Gyro A motor current telemetry test pass/fail report, as well as interchanging EPS BDUs in the procedure. The software shall take action as shown below:

Component	Action
ESA1 Suspect	None
ESA2 Suspect	Earth Pointing Safe Mode: ACE A ESA1 IRU1 PMEA1 PROPS BDU A ADE A AND B to Earth Pointing
Gyro A Suspect	Earth Pointing Safe Mode ACE A ESA1 IRU1 for pitch and roll, IRU2 for yaw PMEA1 PROPS BDU A ADE A and B to Earth Pointing
Control Suspect	Earth Pointing Safe Mode: ACE A ESA1 IRU1 PMEA1 PROPS BDU A ADE A and B to Earth Pointing

Component	Action
Unable to Decide	Sun Pointing Safe Mode: ACE A IRU1 PMEA1 PROPS BDU A ADE A and B to Inertial Pointing
EPS BDU B at Fault	Use EPS BDU A; no mode change

Upon failure of the yaw rate test a pre–set number of times in a row, the software shall compare IRU2 yaw rate with IRU1 yaw rate, and shall commit to the IRU with the lower rate.

The FDIR software shall terminate execution after taking the earliest of the above actions.

3.7.3.2.10.3.2.2 Processing by ADAC FDIR functions in Acquisition Mode (except for Rate Nulling and Update Filter Submodes) and in Normal – Stellar Acquisition Mode

In Acquisition Mode (except for Rate Nulling and Update Filter Submodes) and in Normal – Stellar Acquisition Mode, the FDIR software shall expect the ADAC to use the IRU & ESA for attitude determination, the RWAs for control, and the TAM & MTRs for momentum unloading.

The FDIR software shall monitor whether each ESA has valid earth presence, it shall test each ESA pitch and roll position errors against stored limits, and it shall test the IRU1 yaw rate against a stored limit. In addition, the FDIR software shall monitor each RWA response to routine ADAC torque commands. The FDIR software shall issue no torque commands.

Upon the failure of any above test associated with pitch or roll a pre–set number of times in a row, the FDIR software shall attempt to identify a suspect component or group of components: ESA1, ESA2, Gyro A, EPS BDU, control. The software shall use ESA1 & 2 error comparisons, Gyro A motor current telemetry test pass/fail report, as well as interchanging EPS BDUs in the procedure. The software shall take action as shown below:

Component	Action
ESA1 Suspect	None
ESA2 Suspect	Earth Pointing Safe Mode: ACE A ESA1 IRU1 TAM1 RWAs MTRs ADE A AND B to Earth Pointing

Component	Action
Gyro A Suspect	Earth Pointing Safe Mode ACE A ESA1 IRU1 for pitch and roll, IRU2 for yaw TAM1 RWAs MTRs ADE A and B to Earth Pointing
Control Suspect	Earth Pointing Safe Mode: ACE A ESA1 IRU1 TAM1 RWAs MTRs ADE A and B to Earth Pointing
Unable to Decide	Sun Pointing Safe Mode: ACE A IRU1 TAM1 RWAs MTRs ADE A and B to Inertial Pointing
EPS BDU B at Fault	Use EPS BDU A; no mode change

Upon failure of the yaw rate test a pre–set number of times in a row, the software shall compare IRU2 yaw rate with IRU1 yaw rate, and shall commit to the IRU with the lower rate for yaw rate data.

The FDIR software shall terminate execution after taking the earliest of the above actions.

Upon failure of an RWA response test a pre–set number of times in a row, the FDIR software shall declare that RWA failed. If this is not the only RWA currently declared failed, and if the software has not previously switched to ACE A, it shall command such switch, and it shall declare no RWAs failed. If this is not the only RWA declared failed, and if the software has previously switched to ACE A, it shall command switch to the other side of the GN&C BDU, the software shall restore the GN&C BDU to its starting configuration, it shall declare no RWAs failed, and it shall switch to:

a. Earth Pointing Safe Mode:

b. ACE A

c. ESA1

d. IRU1

e. PMEA2

f. ADE A & B to Earth Pointing

If this is the only RWA currently declared failed, the software shall turn it OFF.

The final action by the FDIR software on the RWA test shall be to turn ON all non–failed RWAs.

3.7.3.2.10.3.3 Outputs from ADAC FDIR functions in Acquisition Mode (except for Update Filter Submode) and in Normal – Stellar Acquisition Mode

The outputs shall be:

a. command to common FDIR software to enter Safe Mode

b. commands to common FDIR software to configure components for Safe Mode

c. command to common FDIR software to stop FDIR processing

d. commands to common FDIR software to interchange redundant sides of the EPS Module BDU

e. RWA ok/failed record for each RWA

f. commands to interchange redundant sides of the GN&C BDU

3.7.3.2.10.4 ADAC FDIR functions in Acquisition – Update Filter Mode, and Normal – Update Filter Mode

In GN&C Acquisition – Update Filter Mode and Normal – Update Filter Mode the ADAC FDIR software shall:

a. monitor attitude errors from alternate sources

b. monitor yaw rate error

c. at the first excessive attitude error or rate error, as appropriate, command redundancy switching of components, and command entry into Earth Pointing Safe Mode

d. at the completion of the functions in c., terminate execution of ADAC FDIR except for that specified in 3.7.3.2.10.2

e. monitor RWA speed change responses to torque commands and compare with stored limits

f. upon detecting RWA speed change response out of limits, as appropriate, command redundancy switching of components, and command entry into Earth Pointing Safe Mode.

3.7.3.2.10.4.1 Input to ADAC FDIR functions in Acquisition – Update Filter Mode, and Normal – Update Filter Mode

The inputs shall be:

a. GN&C mode status

b. ESA position errors from both ESAs

c. Update Filter estimates of pitch, roll, & yaw position error, and yaw rate error

d. gyro A current telemetry test status

e. count of EPS BDU primary–redundant side switches

f. RWA torque commands

g. RWA speed telemetry

h. RWA ON/OFF status telemetry

i. RWA ok/failed record for each RWA

j. GN&C BDU A/B select status

3.7.3.2.10.4.2 Processing by ADAC FDIR functions in Acquisition – Update Filter Mode, and Normal – Update Filter Mode

In GN&C Acquisition – Update Filter Mode and Normal – Update Filter Mode the ADAC FDIR software shall expect ADAC to use the Update Filter for attitude positions and rates, RWAs for control, and the TAM & MTRs for momentum unloading.

The software shall test pitch and roll errors from both ESAs and from the Update Filter against stored limits. It shall test yaw rate error against a stored limit. It shall test RWA speed change response to routine ADAC torque commands against stored limits. The FDIR software shall not issue RWA torque commands.

The FDIR responses to test failures a pre–set number of times in a row of pitch error, roll error, and yaw rate error shall be as defined below:

Test failure	FDIR software response
Update Filter errors in limits, errors from both ESAs out of limits	Command switch to Side A of EPS BDU; no further action if errors now in limits; otherwise, command switch back to Side B of EPS BDU & proceed as defined below
All other combinations of out of limits errors	Earth Pointing Safe Mode: ACE A Non–suspect ESA defined below IRU1 for pitch & roll IRU1 for yaw if Gyro A current telemetry passes test, IRU2 for yaw otherwise TAM1 RWAs MTRs ADE A and B to Earth Pointing

If the test results from the two ESAs disagree with each other, the non–suspect ESA shall be the one whose test results agree with those from the Update Filter. Otherwise, the non–suspect ESA shall be ESA1.

The FDIR software shall terminate execution after taking the earliest of the above actions.

Upon failure of an RWA response test a pre–set number of times in a row, the FDIR software shall declare that RWA failed. If this is not the only RWA currently declared failed, and if the software has not previously switched to ACE A, it shall command such switch, and it shall declare no RWAs failed. If this is not the only RWA declared failed, and if the software has previously switched to ACE A, it shall command switch to the other side of the GN&C BDU, and it shall declare no wheels failed. If this is not the only RWA declared failed, and if the software has previously switched to the other side of the GN&C BDU, the software shall restore the GN&C BDU to its starting configuration, it shall declare no RWAs failed, and it shall switch to Earth Pointing Safe Mode:

a. ACE A

b. ESA1

c. IRU1

d. PMEA2

e. ADE A & B to Earth Pointing

If this is the only RWA currently declared failed, the software shall turn it OFF.

The final action by the FDIR software on the RWA test shall be to turn ON all non–failed RWAs.

3.7.3.2.10.4.3 Outputs from ADAC FDIR functions in Acquisition – Update Filter Mode, and Normal – Update Filter Mode

The outputs shall be:

a. commands to common FDIR software to configure components for Safe Mode

b. commands to common FDIR software to configure components for Safe Mode

c. command to common FDIR software to stop FDIR processing

d. commands to common FDIR software to interchange redundant sides of the EPS Module BDU

e. RWA ok/failed record for each RWA

f. commands to interchange redundant sides of the GN&C BDU

3.7.3.2.10.5 ADAC FDIR functions in Orbit Adjust – Update Filter Mode

In GN&C Orbit Adjust – Update Filter Mode the ADAC FDIR software shall:

a. monitor attitude errors from alternate sources

b. monitor yaw rate error

c. at the first excessive attitude error or rate error, as appropriate, command redundancy switching of components, and command entry into Earth Pointing Safe Mode

d. at the completion of the functions in c., terminate execution of ADAC FDIR except for that specified in 3.7.3.2.10.2

3.7.3.2.10.5.1 Inputs to ADAC FDIR functions in Orbit Adjust – Update Filter Mode

The inputs shall be:

a. GN&C mode status

b. ESA position errors from both ESAs

c. Update Filter estimates of pitch, roll, & yaw position error, and yaw rate error

d. gyro A current telemetry test status

e. count of EPS BDU primary–redundant side switches

3.7.3.2.10.5.2 Processing by ADAC FDIR functions in Orbit Adjust – Update Filter Mode

In GN&C Orbit Adjust – Update Filter Mode the ADAC FDIR software shall expect ADAC to use the Update Filter for attitude positions and rates, and thrusters for control.

The software shall test pitch and roll errors from both ESAs and from the Update Filter against stored limits. It shall test yaw rate error against a stored limit. It shall test RWA speed change response to routine ADAC torque commands against stored limits. The FDIR software shall not issue RWA torque commands.

The FDIR responses to test failures a pre–set number of times in a row of pitch error, roll error, and yaw rate error shall be as defined below:

Test failure	FDIR software response
Update Filter errors in limits, errors from both ESAs out of limits	Command switch to Side A of EPS BDU; no further action if errors now in limits; otherwise, command switch back to Side B of EPS BDU & proceed as defined below
All other combinations of out of limits errors	Earth Pointing Safe Mode: ACE A Non–suspect ESA defined below IRU1 for pitch & roll IRU1 for yaw if Gyro A current telemetry passes test, IRU2 for yaw otherwise Thruster control ADE A and B to Earth Pointing

If the test results from the two ESAs disagree with each other, the non–suspect ESA shall be the one whose test results agree with those from the Update Filter. Otherwise, the non–suspect ESA shall be ESA1.

The FDIR software shall terminate execution after taking the earliest of the above actions.

3.7.3.2.10.5.3 Outputs from ADAC FDIR functions in Orbit Adjust – Update Filter Mode

The outputs shall be:

a. command to common FDIR software to enter Safe Mode

b. commands to common FDIR software to configure components for Safe Mode

c. command to common FDIR software to stop FDIR processing

d. commands to common FDIR software to interchange redundant sides of the EPS Module BDU

3.7.3.2.11 Solar Array (SA) Position FDIR

The Solar Array (SA) Position FDIR shall:

a. monitor SA position error

b. draw logical conclusions on threats to SA position

c. at the first threat to SA position, command redundancy switching of components

d. at the completion of the functions in c., terminate execution of SA Position FDIR.

The SA Position FDIR shall be enabled and disabled by ground command.

3.7.3.2.11.1 Inputs to Solar Array (SA) Position FDIR

The inputs shall be:

a. GN&C mode status

b. Solar Array (SA) position error

c. SAD, ADE, C&DHS & COMS Module BDU side select status

3.7.3.2.11.2 Processing by Solar Array (SA) Position FDIR

In all modes where GN&C software controls the SAD, the SA Position FDIR shall test the SA position error against a stored limit and after a pre–set number of failures in a row, it shall declare the SAD failed. The SA Position FDIR shall execute redundancy switching in the sequence below. The FDIR shall resume the position error test after each switch, and shall truncate the sequence when the position error passes the test. The redundancy switching sequence shall be:

a. SAD

b. ADE

c. BDU in the C&DH & COMS Module

The SA Position FDIR shall terminate processing at the earlier of the end of the sequence or the truncation point of the sequence.

3.7.3.2.11.3 Outputs from Solar Array (SA) Position FDIR

The outputs shall be redundancy switching commands to SAD, ADE, and C&DHS & COMS Module BDU.

3.7.3.2.12 High Gain Antenna (HGA) Position FDIR

The High Gain Antenna (HGA) Position FDIR shall:

a. monitor HGA gimbal positions & compare with a stored position fence

b. draw logical conclusions on threats of HGA encroaching beyond the stored position fence

c. at the first threat of HGA encroaching beyond the stored position fence, command redundancy switching of components

d. at the completion of the functions in c., terminate execution of HGA Position FDIR.

The HGA Position FDIR shall be enabled and disabled by ground command.

3.7.3.2.12.1 Inputs to High Gain Antenna (HGA) Position FDIR

The inputs shall be:

a. HGA gimbal position telemetry

b. HGA A & B ON/OFF status

3.7.3.2.12.2 Processing by High Gain Antenna (HGA) Position FDIR

The HGA Position FDIR shall test the HGA gimbal positions against a stored two–dimensional fence. When the FDIR software detects a pre–set number of test failures in a row, it shall command the PDU in the EPS Module to interchange the ON sides of the HGA. The FDIR software shall resume the gimbal position test against a second fence. When the software detects a pre–set number of failures in a row, it shall command the PDU in the EPS Module to turn OFF both sides of the HGA.

The HGA Position FDIR shall terminate execution at the end of the above sequence.

3.7.3.2.12.3 Outputs from High Gain Antenna (HGA) Position FDIR

The outputs shall be HGA side ON/OFF commands to the PDU in the EPS Module.

3.7.3.3 Navigation Software

[1] Navigation software shall compute the following real–time data:

a. Position vector for the sun

b. Position vector for the moon

c. Position and velocity vector for the scheduled TDRS

d. Position and velocity vector for EOS

e. Doppler frequency prediction for the S–band transponder

f. Accumulated spacecraft clock time bias with respect to UTC

[2] Navigation Software shall perform fault detection, isolation, and recovery

3.7.3.3.1 Compute Astrodynamic Data

Compute Astrodynamic Data computes real–time position vectors for the sun and the moon.

3.7.3.3.1.1 Compute Astrodynamic Data Inputs

a. Spacecraft clock time

3.7.3.3.1.2 Compute Astrodynamic Data Description

[1] Compute Astrodynamic Data shall convert spacecraft clock time to Julian date

[2] Compute Astrodynamic Data shall compute the geocentric position vector for the sun

[3] Compute Astrodynamic Data shall compute the geocentric position vector for the moon

[4] Compute Astrodynamic Data shall update Earth inertial coordinate system transformations

3.7.3.3.1.3 Compute Astrodynamic Data Outputs

a. Real–time position vector for the sun

b. Real–time position vector for the moon

3.7.3.3.2 Propagate TDRS State Vectors

Propagate TDRS State Vectors computes near–real–time position and velocity vectors for the scheduled TDRS. State vectors are uplinked daily for four TDRSs.

3.7.3.3.2.1 Propagate TDRS State Vectors Inputs

a. Four initial TDRS state vectors and associated time tags

b. Scheduled TDRS identification

c. Spacecraft clock time

3.7.3.3.2.2 Propagate TDRS State Vectors Description

[1] Propagate TDRS State Vectors shall propagate TDRS position and velocity vectors by numerically integrating equations of motion.

[2] Propagate TDRS State Vectors shall use a propagation time step of 8.192 spacecraft clock seconds when Doppler measurements are being processed by "Estimate EOS State Vector."

[3] Propagate TDRS State Vectors shall use a propagation time step of 65.536 spacecraft clock seconds otherwise for all TDRS's.

3.7.3.3.2.3 Propagate TDRS State Vectors Outputs

a. Near–real–time position and velocity vectors for the scheduled TDRS

3.7.3.3.3 Estimate EOS State Vector

Estimate EOS State Vector computes near–real–time position and velocity vectors for EOS. Estimate EOS State Vector also computes the real–time master oscillator frequency error and the real–time accumulated spacecraft clock time bias with respect to UTC.

3.7.3.3.3.1 Estimate EOS State Vector Inputs

a. Flag to indicate navigation filter initialization, initial navigation filter state vector, associated state error covariance matrix, and time tag

b. Spacecraft clock calibration flag and calibration data

c. EOS drag makeup maneuver flag, maneuver start time and stop time, and thrust force

d. Master oscillator frequency adjust flag, adjust time, and frequency adjustment

e. Infrequently uplinked solar activity

f. Doppler frequency sums and associated S–Band transponder telemetry

g. Scheduled TDRS identification

h. Spacecraft clock time

3.7.3.3.3.2 Estimate EOS State Vector Description

[1] Estimate EOS State Vector shall estimate a state vector which includes, as a minimum, the following elements:

a. EOS position vector

b. EOS velocity vector

c. Drag coefficient correction

d. Master oscillator frequency error

[2] If the initialize flag is set, Estimate EOS State Vector shall initialize the state vector and associated state error covariance matrix using ground uplinked data.

[3] Estimate EOS State Vector shall maintain an estimate of the accumulated spacecraft clock time bias with respect to UTC.

[4] If the spacecraft clock calibration flag is set, Estimate EOS State Vector shall reset the accumulated spacecraft clock time bias to the uplinked calibration value, including UTC leap seconds.

[5] Estimate EOS State Vector shall propagate the state vector and state error covariance matrix.

[6] Estimate EOS State Vector shall use a propagation time step of 8.192 spacecraft clock seconds.

[7] Estimate EOS State Vector shall propagate the state vector and state error covariance matrix whether or not a Doppler measurement is available.

[8] Estimate EOS State Vector shall propagate EOS position and velocity vectors by numerically integrating equations of motion.

[9] Estimate EOS State Vector shall model drag makeup accelerations and acceleration uncertainties.

[10] Estimate EOS State Vector shall model master oscillator frequency adjustments and frequency adjustment uncertainties.

[11] Estimate EOS State Vector shall sample S–band transponder Doppler frequency sums every 8.192 seconds.

[12] Estimate EOS State Vector shall process two successive S–band transponder Doppler frequency sums to compute a Doppler measurement.

[13] Estimate EOS State Vector shall sample S–band transponder telemetry every 1.024 seconds.

[14] Estimate EOS State Vector shall reject Doppler measurements and set a flag if S–band transponder telemetry indicates invalid data, or if the Doppler measurement exceeds a maximum allowable value (a range check).

[15] Estimate EOS State Vector shall estimate Doppler measurements.

[16] Estimate EOS State Vector shall compute Doppler measurement residuals, Doppler measurement residual variances, and Doppler measurement residual ratios.

[17] Estimate EOS State Vector shall reject Doppler measurements that fail an n–sigma measurement residual edit test.

[18] If the Doppler measurement is accepted, Estimate EOS State Vector shall

a. compute the Kalman gain matrix

b. correct the state vector estimate

c. update the state error covariance matrix

3.7.3.3.3.3 Estimate EOS State Vector Outputs

a. State vector

b. State error covariance matrix

c. Accumulated spacecraft clock time bias with respect to UTC

d. Doppler measurement edit flag

e. Engineering telemetry for ground analysis

3.7.3.3.4 Compute Real–Time Data

Compute Real–Time Data computes real–time position and velocity vectors for EOS, real–time position and velocity vectors for the scheduled TDRS, and the real–time Doppler frequency prediction for the S–band transponder.

3.7.3.3.4.1 Compute Real–Time Data Inputs

a. Near–real–time EOS position and velocity vectors from "Estimate EOS State Vector"

b. Near–real–time TDRS position and velocity vectors from "Propagate TDRS State Vectors"

c. Real–time master oscillator frequency from "Estimate EOS State Vector"

d. Doppler frequency prediction flag for the S–band transponder

3.7.3.3.4.2 Compute Real–Time Data Description

[1] Compute Real–Time Data shall propagate EOS position and velocity vectors to real–time, every 0.512 spacecraft clock seconds.

[2] Compute Real–Time Data shall propagate the scheduled TDRS position and velocity vectors to real–time, every 0.512 spacecraft clock seconds.

[3] If the Doppler compensation predict flag is set, Compute Real–Time Data shall compute the Doppler frequency prediction for TDRSS S–Band signal acquisition, every 1.024 spacecraft clock seconds.

3.7.3.3.4.3 Compute Real–Time Data Outputs

a. Real–time position and velocity vector for EOS

b. Real–time position and velocity vector for the scheduled TDRS

c. Real–time Doppler frequency prediction for the S–band transponder

d. Ancillary Data for use by payload instruments

3.7.3.3.5 Compute Backup Data

Compute Backup Data computes real–time position and velocity vectors for EOS from periodically uplinked EOS orbit elements. Compute Backup Data also computes real–time position and velocity vectors for the scheduled TDRS from periodically uplinked TDRS orbit elements. Depending upon the spacecraft mode, Compute Backup Data position and velocity vectors can be used as primary or backup navigation data.

3.7.3.3.5.1 Compute Backup Data Inputs

a. Epoch orbit elements for EOS and associated epoch time tag

b. Epoch orbit elements for four TDRS's and associated epoch time tags

c. Scheduled TDRS identification

d. Spacecraft clock time

3.7.3.3.5.2 Compute Backup Data Description

[1] Compute Backup Data shall compute current orbit elements for EOS, then convert the orbit elements to position and velocity vectors for EOS.

[2] Compute Backup Data shall compute current orbit elements for the scheduled TDRS, then convert the orbit elements to position and velocity vectors for the scheduled TDRS.

3.7.3.3.5.3 Compute Backup Data Outputs

a. Real–time position and velocity vectors for EOS

b. Real–time position and velocity vectors for the scheduled TDRS

3.7.3.3.6 Perform Navigation FDIR

Perform Navigation FDIR compares "Estimate EOS State Vector" data and "Propagate TDRS State Vectors" data with less accurate backup data. Doppler measurement data and navigation filter covariance matrix data is also examined. Uplinked ephemeris data is also verified before use.

3.7.3.3.6.1 Perform Navigation FDIR Inputs

a. "Estimate EOS State Vector" state vector and state error covariance matrix

b. "Compute Backup Data" position and velocity vectors for EOS

c. "Propagate TDRS State Vectors" position and velocity vectors for the scheduled TDRS

d. "Compute Backup Data" position and velocity vectors for the scheduled TDRS

e. Backup polynomial representation of spacecraft clock time bias and master oscillator normalized frequency error

f. Doppler measurement residual ratios Doppler measurement edit flags

g. Scheduled TDRS identification

h. Spacecraft clock time

3.7.3.3.6.2 Perform Navigation FDIR Description

[1] Perform Navigation FDIR shall compute the difference between

a. "Estimate EOS State Vector" EOS position and velocity vectors, and

b. "Compute Backup Data" EOS position and velocity vectors, then

c. Set a flag(s) if the difference exceeds the accuracy of the "Compute Backup Data" EOS position and velocity vectors.

[2] Perform Navigation FDIR shall compute the difference between

a. "Propagate TDRS State Vectors" scheduled TDRS position and velocity vectors, and

b. "Compute Backup Data" scheduled TDRS position and velocity vectors, then

c. Set a flag(s) if the difference exceeds the accuracy of the "Compute Backup Data" scheduled TDRS position and velocity vectors.

[3] Perform Navigation FDIR shall compute the difference between

a. "Estimate EOS State Vector" accumulated spacecraft clock time bias and master oscillator normalized frequency error, and

b. Backup polynomial representation of the accumulated spacecraft clock time bias and master oscillator normalized frequency error, then

c. Set a flag(s) if the difference exceeds the accuracy of the backup polynomial representation of the accumulated spacecraft clock time bias and master oscillator normalized frequency error.

[4] Perform Navigation FDIR shall maintain a count of edited Doppler measurements, per TDRS, and set a flag(s) if the count exceeds a pre–specified value.

[5] Perform Navigation FDIR shall set a flag(s) if navigation filter covariance elements exceed pre–specified values.

[6] Perform Navigation FDIR shall verify uplinked EOS and TDRS ephemeris data, and the uplinked polynomial representation of the spacecraft clock time bias and master oscillator normalized frequency error as follows:

a. A continuity check with the previous data set shall be performed. Failure of the continuity check shall prevent use of the data.

b. A time span shall be associated with the data set, which defines when the data is valid. This data shall only be used when spacecraft clock time is within this time span.

c. A flag(s) shall be set when errors are detected.

3.7.3.3.6.3 Perform Navigation FDIR Outputs

a. EOS position and velocity vector error flag(s).

b. Scheduled TDRS position and velocity error flag(s).

c. Spacecraft clock and master oscillator error flag(s).

d. Doppler measurement edit error flag(s).

e. Navigation filter covariance matrix error flag(s).

f. Uplinked EOS ephemeris error flag(s).

g. Uplinked TDRS ephemeris error flags(s).

h. Uplinked spacecraft clock time bias/master oscillator normalized frequency error polynomial error flag(s).

(This page intentionally left blank.)

4 REQUIREMENTS TRACEABILITY/VERIFICATION

The requirements for the formal verification of the performance, design, and construction of the GN&CS shall be as specified in this section. These requirements define the extent to which the GN&CS must demonstrate capability to meet the design and performance requirements specified in Sections 3.2 and 3.3 of this document.

4.1 GN&CS Verification

Verification of each Section 3.2 and 3.3 requirement shall be performed as defined in the Verification Matrix, provided under separate cover as Attachment A.

4.1.1 Verification Phases

Phases shall be either Acceptance or Qualification as defined in PS20005404.

4.1.2 Verification Methods

The following methods shall be used as appropriate to verify each of the requirements in Section 3.2 and 3.3: Demonstration, Test, Analysis, and/or Inspection. Each method shall be as defined in PS20005404.

4.1.3 Responsibility for Verification

In general, the responsibility for verification of each requirement specified in Sections 3.2 and 3.3 is that of Astro Space. Specifically the GN&C subsystem engineers, component designers and subcontract support engineers shall assume direct responsibility. Each GN&C component engineer shall develop a verification plan that supports the GN&C plan.

4.1.4 Verification Conditions

Each GN&C component shall be exposed to verification conditions which represent those environments encountered throughout the ground phase and flight mission. The environmental conditions and levels of exposure are defined in the VS, PS20005404, Section 4.

4.2 Testing

4.2.1 Reliability Testing

Reliability verification shall form a major part of the GN&C verification program. Requirements and responsibility for reliability verification are found in Section 7, Design Assurance and Reliability Plan, of the PAIP, 20005397. GN&C component designers have primary responsibility for conducting Parts and Devices Stress Analysis (PAIP, 7.2.2.5), Worst–Case Analysis (PAIP, 7.2.2.6) and Trend Analysis (PAIP, 7.2.2.7). Secondary responsibility as defined in PAIP, Section 7,

includes but is not limited to Failure Mode and Effects Analysis (PAIP, 7.2.2.2), Reliability Assessment (PAIP, 7.2.2.4) and identification of limited life items (PAIP, 7.2.2.8). All test data is to be collected, documented and used in support of the EPS reliability analysis conducted by Reliability Engineering. All testing shall be performed within the guidelines of the System Safety Plan outlined in Section 4 of the PAIP, 20005397.

4.2.2 Engineering Evaluation and Test Requirements

4.2.2.1 Test Flows

Detailed test flows shall be generated for each GN&C component. The test flows shall include the breadboard, ETM, or QTM processes as well as follow–on protoflight/flight verification flow. Tests shall be identified in the test flow with traceability to the particular requirement being verified in Section 3.2 and 3.3 of the applicable performance specification. Figure 8 is a typical component verification flow diagram which shall be used as a basis to develop detailed component verification flow diagrams. The thermal cycle or thermal vacuum test shall contain a cold start test. The GN&C overall verification flow diagram is shown in PN20008664.

4.2.2.2 Performance Tests

The EPS, its components, and all breadboards, where applicable, shall be subjected to the electrical performance tests defined in the Verification Specification, VS. Performance tests include Electrical Interface Tests, (or sometimes referred to as Interface Verification Test (IVT)),

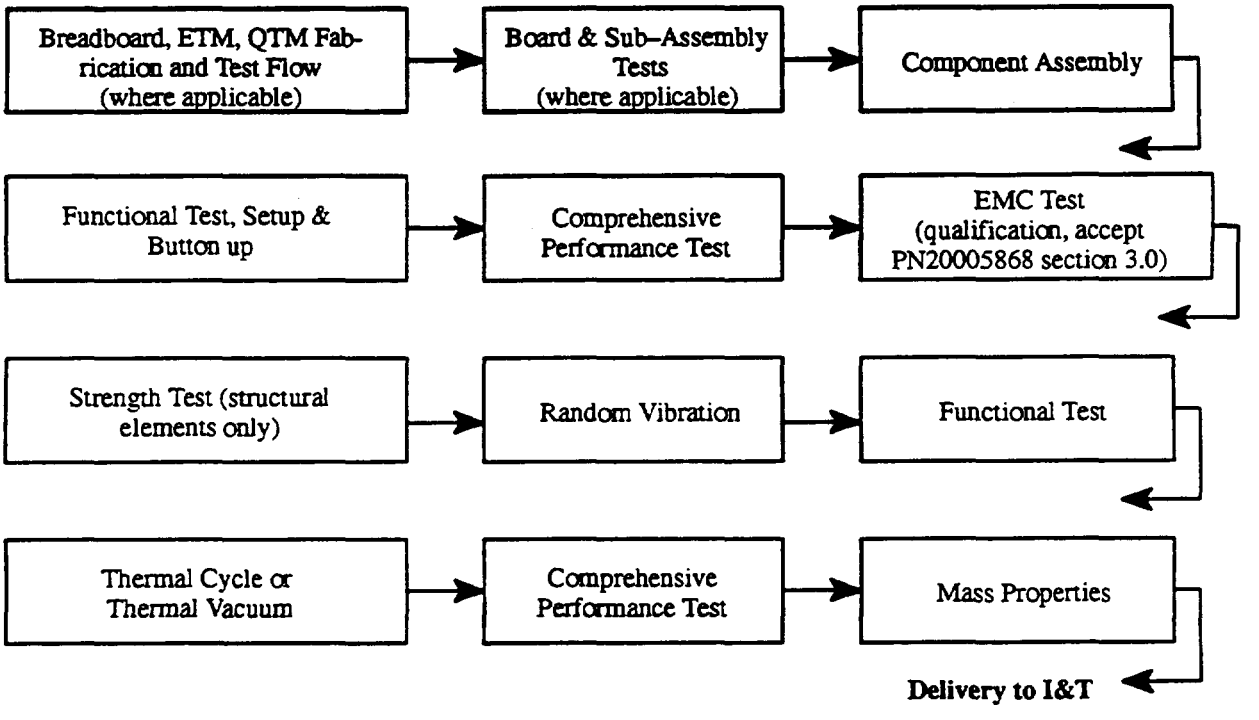

Figure 8. Typical Component Verification Flow

Comprehensive Performance Test (CPT), Limited Performance Test (LPT), and Limited Life Electrical Elements. These tests and their applicability in the verification plan are at the discretion of the test designer as defined in the VS.

4.2.2.3 Verification Tests

Each GN&C component shall be subjected to the verification tests defined in VS, PS20005404, Section 4. Performance tests, as defined above in Figure 8, shall be performed during verification tests to demonstrate functionality during a flight environment.

4.2.3 Acceptance Testing

Acceptance testing shall be performed an all flight components to verify workmanship and functionality. The acceptance test levels are defined in VS, 20005404, Section 4.

4.2.4 Qualification Testing

Qualification testing of QTM and protoflight components shall be used to demonstrate adequacy of design limits. The qualification test levels are defined in VS, 20005404, Figure 1, Comparison of Thermal Test Levels and Figure 2, Comparison of Vibro–acoustic Test Levels and Durations. The delta values shown in these figures are to be applied to the acceptance levels defined in VS Section 4.

4.2.5 Installation and Checkout

The performance test, Electrical Interface Tests, defined in the VS and referenced above in 4.2.2.2 will be implemented to verify that all interface signals are within acceptable limits or applicable performance specifications prior to integration of an assembly or a component into the next higher level.

4.3 Special Verifications

Any GN&CS units identified on the limited–life or critical items lists shall be tested in accordance with Verification Plan, PN20005404.

4.4 Test Equipment

[1] Existing test equipment shall be used wherever practical.

[2] Where new test equipment is required to test units which are physically or functionally identical or similar, the equipment shall be designed to perform its task(s) on each element of that group, where practical.

4.4.1 Test Equipment Safety Features

[1] Test equipment shall incorporate any safety interlocks or other safety features necessary to reduce the introduction of safety hazards by the test equipment.

[2] Any safety feature included in any Spacecraft test equipment shall give a visual, auditory, or electronic indication of indication when it is activated.

4.4.2 Test Equipment Verification

Unless otherwise specified herein, test equipment used to measure GN&CS performance characteristics shall be capable of demonstrating that

a. it will not impose environments on the tested item(s) beyond the levels called for in the Verification Specification PS20004304, and

b. it is capable of imposing the test levels called for in the Verification Specification, PS20005404.

4.4.3 Test Equipment Calibration

Test equipment shall be calibrated in accordance with GSFC 4200502.

4.5 Verification Documentation

The subsystem verification activities shall be documented in:

a. Verification Reports as defined in PS20005404

b. Test procedures

c. Test logs

d. Test Review Board meeting minutes

5 PREPARATION FOR DELIVERY

Not applicable.

(This page intentionally left blank.)

6 NOTES

6.1 Definitions

Not applicable.

6.2 Abbreviations and Acronyms

ACE	Attitude Control Electronics
ADAC	Attitude Determination and Control
Ap	Geomagnetic Activity Index
ATm^2	Ampere–turn meter squared
C&DH	Command and Data Handling Subsystem
CEI	Contract End Item
CSC	Computer Software Component
CSCI	Computer Software Configuration Item
CSS	Coarse Sun Sensor
ELV	Expendable Launch Vehicle
EOL	End–of–Life
EOS	Earth Observing System
EMC	Electromagnetic Compatibility
EMI	Electromagnetic Interference
ESA	Earth Sensor Assembly
ESD	Electrostatic Discharge
FDF	Flight Dynamics Facility
F10.7	Solar Flux
GIS	General Interface Specification
GN&C	Guidance, Navigation and Control
GN&CS	GN&C Subsystem
GSFC	Goddard Space Flight Center
HGA	High Gain Antenna
Hz	Hertz
IRU	Inertial Reference Unit
kg	kilogram

MMU	Magnetic Momentum Unloading
MO	Master Oscillator
MTR	Magnetic Torque Rod
NASA	National Aeronautics and Space Administration
N–m	Newton–meter
N–m–s	Newton–meter second
ODAC	Orbit Determination and Control
PMO	Program Management Office
Ps	Probability of Success
QTM	Qualification Test Model
RWA	Reaction Wheel Assembly
SCC	Spacecraft Control Computer
SHDP	Safe Hold Digital Processor
SSST	Solid State Star Tracker
TAM	Three–Axis Magnetometer
TBD	To Be Determined
TBR	To Be Resolved
TDRS	Tracking and Data Relay Satellite
TDRSS	Tracking and Data Relay Satellite System
TONS	TDRSS Onboard Navigation System

6.3 Exceptions to the GIS and GIIS

Not applicable.

6.4 Requirements Traceability Matrix

The requirements shown in Section 3 of this specification were derived from the source documents shown in the Requirements Traceability Matrix, Attachment B, provided under separate cover.

APPENDIX I

10 COMMANDS AND TELEMETRY REQUIREMENTS

10.1 Guidance, Navigation, and Control (GN&C) Command List

Item/Operation	Compon.	Function	Type	Qty #
ACE Commands The ACE interfaces to the GN&C EM BDU and requires serial, relay, and logic command interfaces.				
ACE A pwr on/ Ace B pwr off	ACE	on/off	relay	1
ACE B pwr on/ Ace A pwr off	ACE	on/off	relay	1
TAM 1 pwr on	ACE	on/off	relay	1
TAM 2 pwr on	ACE	on/off	relay	1
TAM 1 & 2 pwr off	ACE	off	relay	1
X MAG Torq A on	ACE	on	relay	1
X MAG Torq B on	ACE	on	relay	1
Y MAG Torq A on	ACE	on	relay	1
Y MAG Torq B on	ACE	on	relay	1
Z MAG Torq A on	ACE	on	relay	1
Z MAG Torq B on	ACE	on	relay	1
XYZ MAG Torq A off	ACE	off	relay	1
XYZ MAG Torq B off	ACE	off	relay	1
SEP. signal override on to ACE A	ACE	override	discrete	1
SEP. signal override off to ACE A	ACE	override	discrete	1
SEP. signal override on to ACE B	ACE	override	discrete	1
SEP. signal override off to ACE B	ACE	override	discrete	1
ACE A safe mode on	ACE	safe	discrete	1
ACE A safe mode off	ACE	safe	discrete	1
ACE B safe mode on	ACE	safe	discrete	1
ACE B safe mode off	ACE	safe	discrete	1
Computer status monitor pulse train to ACE A	ACE		discrete	1
Computer status monitor pulse train to ACE B	ACE		discrete	1
Computer status monitor enable to ACE A	ACE	status	discrete	1

Item/Operation	Compon.	Function	Type	Qty #
ACE Commands (Cont'd)				
Computer status monitor inhibit to ACE A	ACE	status	discrete	1
Computer status monitor enable to ACE B	ACE	status	discrete	1
Computer status monitor inhibit to ACE B	ACE	status	discrete	1
IRU position clear ACE A	ACE	pos clr	discrete	1
IRU position clear ACE B	ACE	pos clr	discrete	1
Slew to ACE A	ACE	slew	discrete	1
Slew to ACE B	ACE	slew	discrete	1
ACE A safe hold proc cmds	ACE		serial	
ACE A SCC cmd mode	ACE		serial	
ACE A safe hold cmd mode	ACE		serial	
ACE B safe hold proc cmds	ACE		serial	
ACE B SCC cmd mode	ACE		serial	
ACE B safe hold cmd mode	ACE		serial	
PSU Commands The PSU interfaces with the GN&C EM BDU				
IRU A on	PSU	on	relay	1
IRU A off	PSU	off	relay	1
IRU B on	PSU	on	relay	1
IRU B off	PSU	off	relay	1
IRU C on	PSU	on	relay	1
IRU C off	PSU	off	relay	1
Star tracker A on	PSU	on	relay	1
Star tracker A off	PSU	off	relay	1
Star tracker B on	PSU	on	relay	1
Star tracker B off	PSU	off	relay	1
Fine sun sensor on	PSU	on	relay	1
Fine sun sensor off	PSU	off	relay	1
EPC A on	PSU	on	relay	1
EPC A off	PSU	off	relay	1
EPC B on	PSU	on	relay	1
EPC B off	PSU	off	relay	1

Item/Operation	Compon.	Function	Type	Qty #
RWA Commands				
RWA 1 power on	RWA1	on	relay	1
RWA 1 power off	RWA1	off	relay	1
RWA 2 power on	RWA2	on	relay	1
RWA 2 power off	RWA2	off	relay	1
RWA 3 power on	RWA3	on	relay	1
RWA 3 power off	RWA3	off	relay	1
RWA 4 power on	RWA3	on	relay	1
RWA 4 power off	RWA3	off	relay	1
ESA Commands (Interfaces with Power EM BDU)				
ESA 1 power on	ESA1	on	relay	1
ESA 1 power off	ESA1	off	relay	1
ESA 1 heater enable	ESA1	enable	relay	1
ESA 1 heater diasble & high torque off	ESA1	disable	relay	1
ESA 1 high torque on	ESA1	high torque	relay	1
ESA 2 power on	ESA2	on	relay	1
ESA 2 power off	ESA2	off	relay	1
ESA 2 heater enable	ESA2	enable	relay	1
ESA 2 heater diasble & high torque off	ESA2	disable	relay	1
ESA 2 high torque on	ESA2	high torque	relay	1
IRU Commands				
IRU channel A low rate	IRU	rate	relay	1
IRU channel A high rate	IRU	rate	relay	1
IRU channel B low rate	IRU	rate	relay	1
IRU channel B high rate	IRU	rate	relay	1
IRU channel C low rate	IRU	rate	relay	1
IRU channel C high rate	IRU	rate	relay	1
Star Tracker Commands (interfaces directly to 1553)				
Star tracker commands	ST1	cmds	serial	
Star tracker commands	ST2	cmds	serial	

10.2 Telemetry Table Header Definition

The table header below will be used for all component telemetry summaries. An explanation of each column heading is provided for clarity.

Telemetry Point	Units	Type	Bits	1 kbit H/K		16 kbit H/K	
				Rate	Total	Rate	Total

Col Heading	Definition
Telemetry Point	Description of the telemetry data contents
Quantity	The quantity of telemetry interfaces needed
Type	Active Analog (AA), Passive Analog (PA), Active Digital Discrete (AD), Passive Digital Discrete (PD), Serial (S)
Bits	The number of bits needed to represent the data
H&S (1kbps)	Identities sample rates and total bps contribution for a given telemetry point to the 1 kbps (health & safety) housekeeping telemetry stream.
H/K (16kbps)	Identifies sample rates and total bps contribution for a given telemetry point to the 16 kbps (housekeeping) telemetry stream.
Rate	The number of times the value is sampled within each major frame of the specified telemetry stream.
Total	Calculated contribution to the total bandwidth of the specified telemetry stream.

10.3 Guidance, Navigation and Control Subsystem Telemetry Estimates

10.3.1 Attitude Control Electronics (ACE)

Critical telemetry values include IRU rate, torque rod current, reaction wheel drive, TAM compensated field data, IRU position data, reaction wheel tachometer count, and reaction wheel momentum. The redundant ACE is in cold standby. The ACE interfaces with the GN&C BDU.

Telemetry Point	Units	Type	Bits	1 kbit H/K		16 kbit H/K	
				Rate	Total	Rate	Total
ACE A on/ACE B off	1	AD	1	1	0.15	8	0.12
TAM 1,2 Power on/off	2	AD	1	1	0.03	8	0.24
CSM A,B Timer State	2	AD	1	1	0.03	8	0.24
CSM A,B Inhibit	2	AD	1	1	0.03	8	0.24
CSS 1,2 Y,Z Posn Error Sig	4	AA	8	8	7.81	8	7.81
IRU Rate (2 channels)†	6	AA	8	64	46.9	64	46.9
RW Tach A count	4	AA	8	8	3.9	8	3.9
RW Tach B count	4	AA	8	8	3.9	8	3.9
RW control voltage	4	AA	8	8	3.9	8	3.9
Torque Drive Current A/B	6	AA	8	8	5.9	8	5.9
ACE (A/B) +5,15 REG Voltg	2	AA	8	1	0.24	8	1.95
ACE (A/B) –15,+28 REG Voltg	2	AA	8	1	0.24	8	1.95
ACE A,B+15 REG voltage	2	AA	8	1	0.24	8	1.95
IRU Safe Hold Posn– ACE A/B	6	AA	8	8	5.8	64	46.9
TAM Field Strength (all axes)	2	AA	24	1	0.73	8	1.5
Card Cage Temperature	1	PA	8	1	0.12	1	0.12
ACE Power Cond Temp	1	PA	8	1	0.12	1	0.12
Torque Drive Eec Temp	1	PA	8	1	0.12	1	0.12
IRU Position Data (ACE A,B)	2	S	144	8	–	8	–
TACH Data	2	S	64	8	–	8	–
Component Status Data	2	S	16	8	3.9	8	3.9
Safe Mode Elec status	2	S	24	8	5.8	8	5.8
Auxilliary Status	2	S	24	8	5.8	8	5.8
Safe Hold Digital Prcsr Data	2	S	384	8	93.8	8	93.8
Total Bandwidth Contribution Estimate					**184**		**237.5**

10.3.2 Earth Sensor Telemetry

The earth sensor interfaces with the DAS BDU. Critical telemetry values include both course and fine pitch error signals.

Telemetry Point	Units	Type	Bits	1 kbit H/K		16 kbit H/K	
				Rate	Total	Rate	Total
Heater Status (On/Off)	2	PD	1	1	0.03	8	0.24
Torque Mode (Norm/High)	2	PD	1	1	0.03	8	0.24
Angle Mode (Wide/Normal)	2	PD	1	1	0.03	8	0.24
Leading Edge (Sun/No Sun)	2	PD	1	1	0.03	8	0.24
Trailing Edge (Sun/No Sun)	2	PD	1	1	0.03	8	0.24
Coarse Pitch Error	2	AA	8	8	2.0	8	2.0
Fine Pitch Error†	2	AA	8	8	2.0	64	16
Coarse Roll Error	2	AA	8	8	2.0	8	2.0
Fine Roll Error†	2	AA	8	8	2.0	64	16
Scanner RPM	2	AA	8	1	0.24	8	2.0
Electronics Temperature	2	PA	8	1	0.24	1	0.24
Scanner Temperature	2	PA	8	1	0.24	1	0.24
Heater control relay status (scanner)	4	PA	8	1	0.49	1	0.49
Total Bandwidth Contribution Estimate					**9.39**		**40.69**

† This sampling rate of this telemetry can be reduced if there is a need for bandwidth.

10.3.3 Reaction Wheel Assembly Telemetry

The RWA interfaces with the RWA BDU. Motor current to each of the reaction wheels is considered a critical telemetry value.

Telemetry Point	Units	Type	Bits	1 kbit H/K		16 kbit H/K	
				Rate	Total	Rate	Total
Motor Current	4	AA	8	1	0.49	8	2.0
Spin Bearing Temperature	8	PA	8	1	0.98	1	0.98
Wheel Status (On/Off)	4	PD	1	1	0.06	8	0.49
Heater control relay status	8	PD	1	1	0.12	8	0.98
Total Bandwidth Contribution Estimate					**1.65**		**4.45**

10.3.4 Inertial Reference Unit Telemetry

The IRU interfaces with the GN&C BDU. Standard status monitoring only is required.

Telemetry Point	Units	Type	Bits	1 kbit H/K		16 kbit H/K	
				Rate	Total	Rate	Total
Gyro Temperature	3	PA	8	1	0.37	1	0.37
Voltages	3	AA	8	1	0.37	8	2.9
Motor Current	3	AA	8	1	0.37	64	23.4
Channel Status (On/Off)	3	PD	1	1	0.05	8	0.37
Pulse Rate Mode (High/Low)	3	PD	1	1	0.05	8	0.37
Heater control relay status	2	PD	1	1	0.03	8	0.24
Total Bandwidth Contribution Estimate					**1.2**		**27.64**

10.3.5 Star Tracker Telemetry

The star tracker does not interface with any BDU, instead it is connected directly to the 1553 bus. Critical telemetry values include star position, presence indication, and intensity.

Telemetry Point	Units	Type	Bits	1 kbit H/K		16 kbit H/K	
				Rate	Total	Rate	Total
Tracker Temperature	4	PA	8	1	0.48	1	0.48
Power Status	2	PD	1	1	0.03	8	0.24
Heater relay status	2	PD	1	1	0.03	8	0.24
Serial Word	2	S	48	1	1.46	8	11.72
Total Bandwidth Contribution Estimate					**2**		**12.7**

10.3.6 Three Axis Magnetometer (TAM) Telemetry

The TAM interfaces with the GN&C BDU. Measured field strength along each axis is considered a critical telemetry value.

Telemetry Point	Units	Type	Bits	1 kbit H/K		16 kbit H/K	
				Rate	Total	Rate	Total
Magnetometer Status (On/Off)	2	PD	1	1	0.03	8	0.24
Heater relay status (electronics & sensor)	4	PD	1	1	0.06	8	0.48
Temp (electronics & sensor)	4	PA	8	1	0.48	8	3.91
Field Strength (all axes)	2	AA	24	1	0.73	8	1.5
Total Bandwidth Contribution Estimate					**1.3**		**6.13**

10.3.7 Magnetic Torque Rods (MTR) Telemetry

The temperature values for the MTRs will be telemetered via the Power EM BDU.

Telemetry Point	Units	Type	Bits	1 kbit H/K		16 kbit H/K	
				Rate	Total	Rate	Total
Temperature	3	PA	8	1	0.37	1	0.37
Total Bandwidth Contribution Estimate							**0.37**

10.3.8 Body–mounted Coarse Sun Sensor (CSS) Telemetry

The temperature related telmetry for the body–mounted course sun sensor is via the GN&C EM BDU.

Telemetry Point	Units	Type	Bits	1 kbit H/K		16 kbit H/K	
				Rate	Total	Rate	Total
Heater control relay status	2	PD	1	1	0.03	1	0.03
Temperature	1	PA	8	1	0.12	1	0.12
Total Bandwidth Contribution Estimate					**0.15**		**0.15**

10.3.9 Fine Sun Sensor (FSS) Telemetry

The FSS interfaces with the PWR BDU.

Telemetry Point	Units	Type	Bits	1 kbit H/K		16 kbit H/K	
				Rate	Total	Rate	Total
Temperature (electronics & sensor head)	2	PA	8	1	0.24	1	0.24
Status	1	S	32	–	–	8	3.9
Total Bandwidth Contribution Estimate					**0.27**		**4.4**

10.3.10 Power Switching Unit (PSU)

The PSU sits inside of the GN&C Equipment module and interfaces with the GN&C EM BDU.

Telemetry Point	Units	Type	Bits	1 kbit H/K		16 kbit H/K	
				Rate	Total	Rate	Total
EPC on/off status	2	PD	1	1	0.03	8	0.24
IRU Power relay status	3	PD	1	1	0.04	8	0.37
Earth Sensor Elect. (ESE) Power Relay Status	2	PD	1	1	0.03	8	0.24
Star Tracker Power relay status	2	PD	1	1	0.03	8	0.24
Fine Sun Sensor Electronics Power Relay status	1	PD	1	1	0.02	8	0.12
EPC input current	2	AA	8	–	–	8	1.95
EPC Temperature	2	PA	8	1	0.03	1	1.95
Total Bandwidth Contribution Estimate					**0.18**		**5.11**

MARTIN MARIETTA
ASTRO SPACE

EOS-DN-CNF-017
Revision A

DESIGN NOTE

TITLE: HOUSEKEEPING EQUIPMENT MODULES - MECHANICAL LAYOUT DRAWINGS

AUTHOR: B. Queen BQ S. Raymus SDR

AUTHOR'S MANAGER: C. Faust C. Faust DATE 6/18/93

SE&I MANAGER: S. Carey Scott R. Carey DATE 6/18/93

CHIEF ENGINEER: D. Longcoy D. Longcoy DATE 6/18/93

REVISIONS

LETTER	DESCRIPTION	DATE	AUTHOR
-	Initial release	5/13/92	S. Raymus
A	Updated for Spacecraft PDR to reflect design changes since Subsystem PDR	6/18/93	S. Raymus SDR

EOS Form
006-01/01/93

DCC030993

(This page intentionally left blank.)

MARTIN MARIETTA
ASTRO SPACE

DESIGN NOTE SUMMARY

DN#: EOS-DN-017 **Revision:** A **Date:** June 18, 1993

Title: Housekeeping Equipment Modules - Mechanical Layout Drawings

Author: S. Raymus **Source ID (ESTA, PD, Memo, etc.):**

Purpose/Questions Answered:

To present mechanical packaging layouts for housekeeping Equipment Modules (EMs) on the EOS-AM spacecraft.

Summary/Answers:

Overall isometric views of each EM are presented along with plan views of each panel assembly. Design rationale for each EM is presented in text form.

Recommendations: (Be Specific)	Accepted	Rejected	Baselined	Date

Open Items/Action Required	Responsible Person	Due Date

Comments

Form Completed By Steven Raymus **Date** 7/8/93 **Page** 2 **of** DCC030993

(This page intentionally left blank.)

1 INTRODUCTION

The purpose of this design note is to present the mechanical layout drawings for the housekeeping Equipment Modules (EMs) on the EOS-AM spacecraft and to give an overview of significant features and recent design modifications.

2 EQUIPMENT MODULE PACKAGING

2.1 Overall Layout on Spacecraft

The location of each EM on the spacecraft was driven by mass properties (c.g.), heat rejection capability, field-of-view (FOV), launch vehicle fairing clearance, wiring harness length and ground serviceability requirements. Each EM was sized to house all of the equipment of one electrical subsystem. This modular design approach was not practical for all subsystems, and these are discussed later.

The heaviest components are the Batteries, followed by the Recorders and the RWAs. The proximity of the EMs containing these components to the launch vehicle interface reflects this weight relationship.

The location of the Guidance, Navigation and Control (GN&C) Sensor EM was FOV driven. It contains the Star Trackers which require a +Y view as well as protruding light shades to reduce the effects of structure glare. The latter requirement dictated a mid-deck location for this EM because the shades would interfere with the MODIS cooler FOV if located any further in the +X direction.

The Communications (Comm) EM was located at the +X end of the spacecraft in order to be near the HGA. Some Command and Data Handling (C&DH) equipment was co-located with the Comm equipment so as to preserve high-rate signal quality by minimizing harness length. The Comm components that are associated with the Direct Access System (DAS) are located on a separate panel which is located on the aft-end of the spacecraft near the nadir deck. They were located here so as to be close to the DAS antenna which is in bay-2 of the +Z side of the spacecraft.

There are two EM structural configurations: box-type and panel-type. The latter includes only the Hex-Bay Battery panel and the DAS panel. All other EMs are of the box-type configuration. Kinematic mounts are used to interface all Equipment Modules to the primary structure. These devices prevent load sharing between the two structures so as to minimize truss distortion. Electrical interface to the spacecraft bus is accomplished with an interface connector panel which is typically located on the outer face of the panel closest to the primary structure. All box-type EMs are equipped with a removeable panel on the -Y side which provides limited service access to the EM components during I&T.

2.2 Power EM and Hex-Bay Battery Panel

The Power EM is located on the -Z side of the Hex-Bay (bay-1) of the spacecraft and is used to house the Power Management and Distribution (PMAD) equipment, the spacecraft Batteries and certain GN&C equipment. Its structure is composed of aluminum honeycomb sandwich panels with aluminum facesheets. The configuration of the structure is unique in that it must mount to non-planar node fittings on the spacecraft truss.

All of the PMAD equipment is located on the Zenith (-Z) panel and is arranged to minimize wire harness lengths to the batteries and to simplify thermal control heatpipe layouts. The Battery Power Conditioners (BPCs) have significant 'hot-spots' and dictate the need for heatpipes in the panel.

Also included on the -Z panel is the Fine Sun Sensor (FSS) electronics from the GN&C subsystem. This was located here so as to be near the FSS sensor which is mounted to the outside of the -Y panel of the EM for FOV reasons.

The other GN&C component located on the Power EM is the pitch Magnetic Torque Rod (MTR). This was located on the outside of the -X panel because that panel provided a properly oriented and sufficiently long mounting surface for the rod, and offered a location far enough from other magnetic field sensitive components.

The spacecraft Batteries are split between the +Y panel of the Power EM and a panel located on the +Y side of the Hex-Bay. Each holds a 54 cell battery pack and is fully removeable at spacecraft I&T. The arrangement of cells on the Hex-Bay mounted panel accommodates a primary structure tube which traverses the panel. Both battery packs are equipped with an aluminum cover which provides EMI protection and personnel safety. The covers have thermal blankets on the side opposite the batteries in order to isolate the batteries from spacecraft temperature. A series of Battery Enable Plugs are mounted to the outer surface of the -X panel. These plugs connect the batteries to the spacecraft load and must be serviced immediately prior to launch. For this reason, they are located so as to be accessible from the launch vehicle fairing service doors.

Significant changes to the Power EM since Spacecraft Bus and Subsystem PDRs include:

1. Incorporation of thermally actuated bypass switches to replace battery bypass diodes. This allowed removal of diode bracket assembly.
2. Addition of aluminum battery cover for EMI control.
3. Relocation of the ESEs from the Power EM to the CERES plate on the nadir side of the spacecraft to minimize harness length to earth sensor scanners.
4. Incorporation of redesigned Heater Control Electronics (HCE) and Bus Data Unit (BDU).
5. Significant changes to the size and weight of the Power Distribution Unit (PDU)
6. Addition of a Fuse and Distribution Box (FDB).

7. Change from quantity 4 to quantity 16 Battery Enable Plugs.
8. Movement of the MTR to a location closer to the edge of the -X panel to reduce its random vibration environment.
9. Changes to the location and quantity of battery interface and spacecraft bus interface connectors.
10. Re-layout of the Power EM battery panel to eliminate battery protrusion through the slanted base panel.
11. Location of HCEs on same panels as the heaters they control to simplify EM buildup and disassembly.

2.3 Recorder EM

The Recorder EM is located on the -Z side of the spacecraft in bay-2. It is composed of an all aluminum honeycomb sandwich structure and it houses the spacecraft recorders and related C&DH equipment. The layout of the module was designed so that all components on the -Z panel are off during launch/ascent and survival modes and all components that are on during these modes are on the +Y panel. Heatpipes are used in the -Z and +Y panels to spread heat between operating units, their non-operating redundant units (DAS, KSA Modulators) and components with varying power profiles (DCUs/DMUs) thereby reducing heater power requirements during science and survival modes.

The heaviest components are the Data Memory Units (DMUs) and these are located toward the -X and -Y sides of the spacecraft to keep the c.g. low, to help counterbalance the weight of the batteries and to provide accessibility. The Science Formatting Equipment (SFE) was placed in between the KSA and DAS modulators so as to minimize harness length for the high-rate signals passing between the units.

All of the equipment in this EM have top-mounted connectors. That is, the connectors are located on the side opposite the mounting surface. This was done to allow for a 3" minimum box-to-box spacing.

Significant changes to the Recorder EM since Spacecraft Bus and Subsystem PDRs include:

1. Elimination of electromechanical High Rate Tape Recorders (HRTRs), NASA Standard Tape Recorders (NSTRs), Solid State Buffers (SSBs) and Load Power Conditioner (LPC) and replacement by solid-state Data Memory Units (DMUs) and Data Control Units (DCUs).
2. Addition of the DAS Modulators (were formerly on the DAS Panel).
3. Elimination of the hairpin Variable Conductance Heatpipes (VCHPs) and network and the reduction of the -Z panel from 3" thick to 1" thick.
4. Elimination of the L-VCHP and network and the thermal link between the +Z and +Y panels.
5. Incorporation of a redesigned HCE and BDU.

6. Change of equipment mounting location from +Z panel to +Y panel.
7. Location of HCEs on same panels as the heaters they control to simplify EM buildup and disassembly.

2.4 GN&C Sensor EM

The Sensor EM is located in bays 3 and 4 and is composed of two separate structures: the optical bench and the equipment mounting shell. The optical bench is a sandwich panel with Graphite/Epoxy face sheets and aluminum honeycomb core. This provides a stable platform for the Star Trackers and the Inertial Reference Unit (IRU). The equipment mounting shell is composed of aluminum honeycomb sandwich panels with aluminum face sheets. This structure holds the Attitude Control Electronics (ACE), the Triaxial Magnetometers (TAMs) and other GN&C support components which are not alignment critical. The shell and the optical bench are both kinematically mounted to minimize thermal distortion.

The bench mounted components present some significant cooling challenges because the composite face sheets are poor heat conductors. The IRU is cooled by radiation and conduction couplings to the optical bench and by a radiation coupling to the +Y panel. The Star Trackers are cooled by conduction to the bench through their mounting bracket, radiation from the mounting bracket and by radiation from the Star Tracker housings themselves. All shell mounted components are cooled by conduction to the -Z radiator panel.

The shell mounted components are arranged for ease of harnessing and serviceability. The only orientation sensitive components are the TAM sensors which must have their Y-axis aligned with the spacecraft Y-axis.. The shell can be separated from the bench by disengaging the kinematic mounts and the interpanel wiring harness.

Significant changes to the GN&C Sensor EM since Spacecraft Bus and Subsystem PDRs include:

1. Incorporation of Ball Aerospace Star Trackers.
2. Incorporation of redesigned HCE, BDU, PSU and ACE.
3. Refinement of the Star Tracker Mounting Bracket.
4. Addition of an FDB.
5. Location of HCEs on same panels as the heaters they control to simplify EM buildup and disassembly.

2.5 Communications/Command and Data Handling EM

The Comm/C&DH EM is located in bays 5 and 6 on the zenith (-Z) side of the spacecraft. The structure of this EM is composed of all aluminum honeycomb sandwich panels with aluminum facesheets.

The C&DH components of this EM include the Command and Telemetry Interface Unit (CTIU) and

the Spacecraft Controls Computer (SCC). These units have significant harness interconnections with the Master Oscillator (MO) and are thus located in close proximity.

The MO, S-Band Transponders (SBTs), S-Band Interface Unit (SBIU) and the Band Reject Filters (BRFs) are the major components of the Comm subsystem. The SBTs have high heat dissipation levels and are located on the +Y panel which has the greatest heat rejection capability. The BRFs and SBIU have low dissipation levels and are placed on the +Z panel. The layout of these components relative to each other was driven by loop radius requirements of the coax harness and by the need to minimize harness length.

This EM also accommodates the Array Drive Electronics (ADE). Although this unit is a part of the Electrical Power Subsystem, it was located in this EM because it requires close proximity to the Solar Array Drive (SAD).

Significant changes to the Comm/C&DH EM since Spacecraft Bus and Subsystem PDRs includes:

1. Incorporation of a redesigned HCE and BDU.
2. SBIU size increase and re-layout of related components to accommodate.
3. CTIU size increase and layout changes to accommodate.
4. Location of HCEs on same panels as the heaters they control to simplify EM buildup and disassembly.

2.6 Direct Access System Panel

The DAS Panel is located on the +Y face of the Hex-Bay (bay-1). It is one of two EMs on the spacecraft that is composed of a single honeycomb sandwich panel structure (the other is the Hex-Bay Battery panel discussed in Section 2.2). The panel core and facesheets are all aluminum.

The DAS Panel is a part of the Communications subsystem and interfaces to the DAS antenna on the nadir side of the spacecraft. The high heat dissipating components are the DAS Transmitters which drive the need for embedded heatpipes. All components on the panel are placed so as to simplify waveguide and harness layouts.

Significant changes to the DAS Panel since the Spacecraft Bus and Subsystem PDRs include:

1. Movement of the DAS Modulators from the DAS Panel to the Recorder EM as a part of the change to solid-state recorders.
2. Incorporation of a redesigned HCE and BDU.

2.7 Reaction Wheel Assembly EM

The RWA EM is located on the -Y face of the spacecraft in bay-2. It is composed of aluminum honeycomb sandwich panels with aluminum facesheets and it houses the 4 Reaction Wheel Assemblies and related support electronics. All RWAs are attached to the +Z panel of the structure

with special support brackets. The brackets are designed to provide a natural frequency of 100 Hz so as to prevent coupling of the RWAs with the structure dynamic modes. There are a total of 2 brackets with each supporting a pair of RWAs.

The RWAs are cooled by conducting heat to the nadir (+Z) radiator panel of the EM and by radiating heat to the –Y and –X radiator panels.

Significant changes to the RWA EM since Spacecraft Bus and Subsystem PDRs include:

1. Relayout of the RWAs and redesign of the support brackets to prevent dynamic coupling with the structure.
2. Incorporation of a redesigned HCE and BDU.

DCC030993

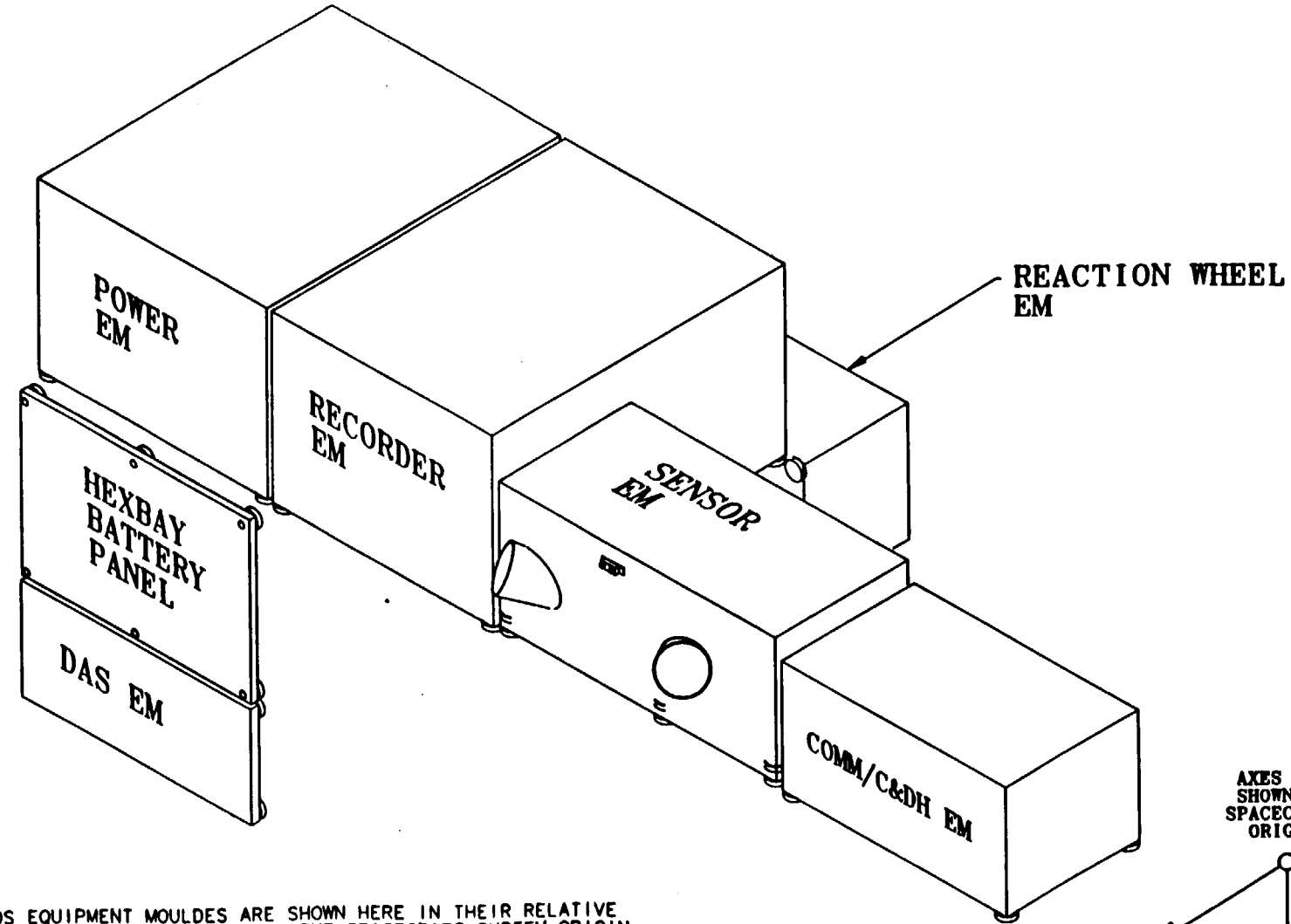

THE EOS EQUIPMENT MOULDES ARE SHOWN HERE IN THEIR RELATIVE ORIENTAION ON THE SPACECRAFT. THE SPACECRAFT SYSTEM ORIGIN IS ON THE S/C CENTERLINE AT THE CENTER OF THE PROPULSION MODULE BASE PANEL. MODULE (SUBSYSTEM) ORIGINS ARE AT THEIR MOST -X, -Y, +Z POINT.

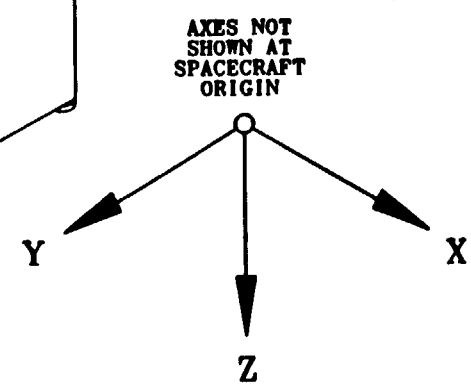

GE Astro Space
EOS SPACECRAFT EQUIPMENT MODULES
F 49871 sc_modules.dwg

AS OF MAY 14, 1993

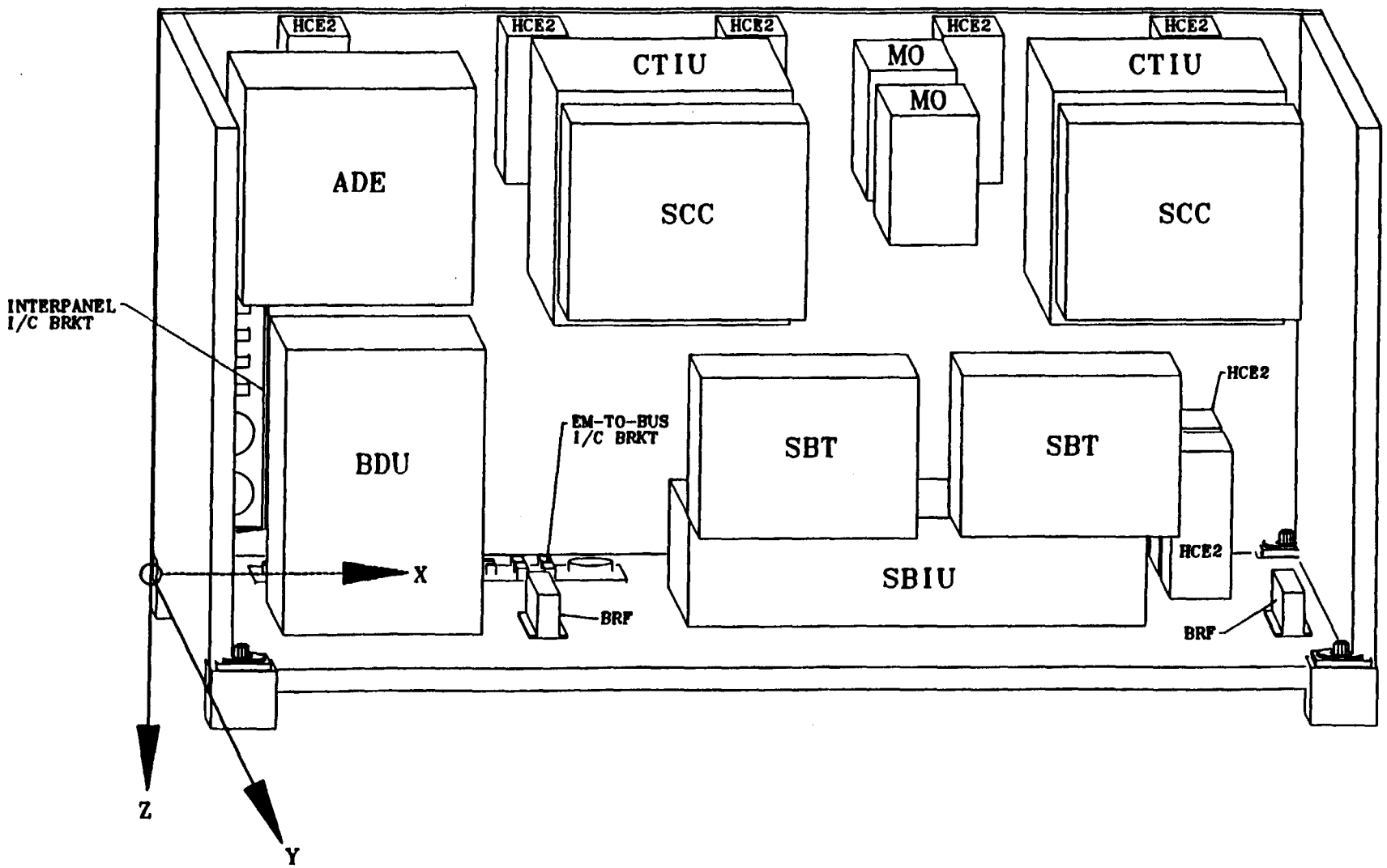

AS OF MAY 14, 1993

GE Astro Space

EOS COMMUNICATIONS EQUIPMENT MODULE

E 49871 comm_iso1.dwg

SCALE SHEET 1

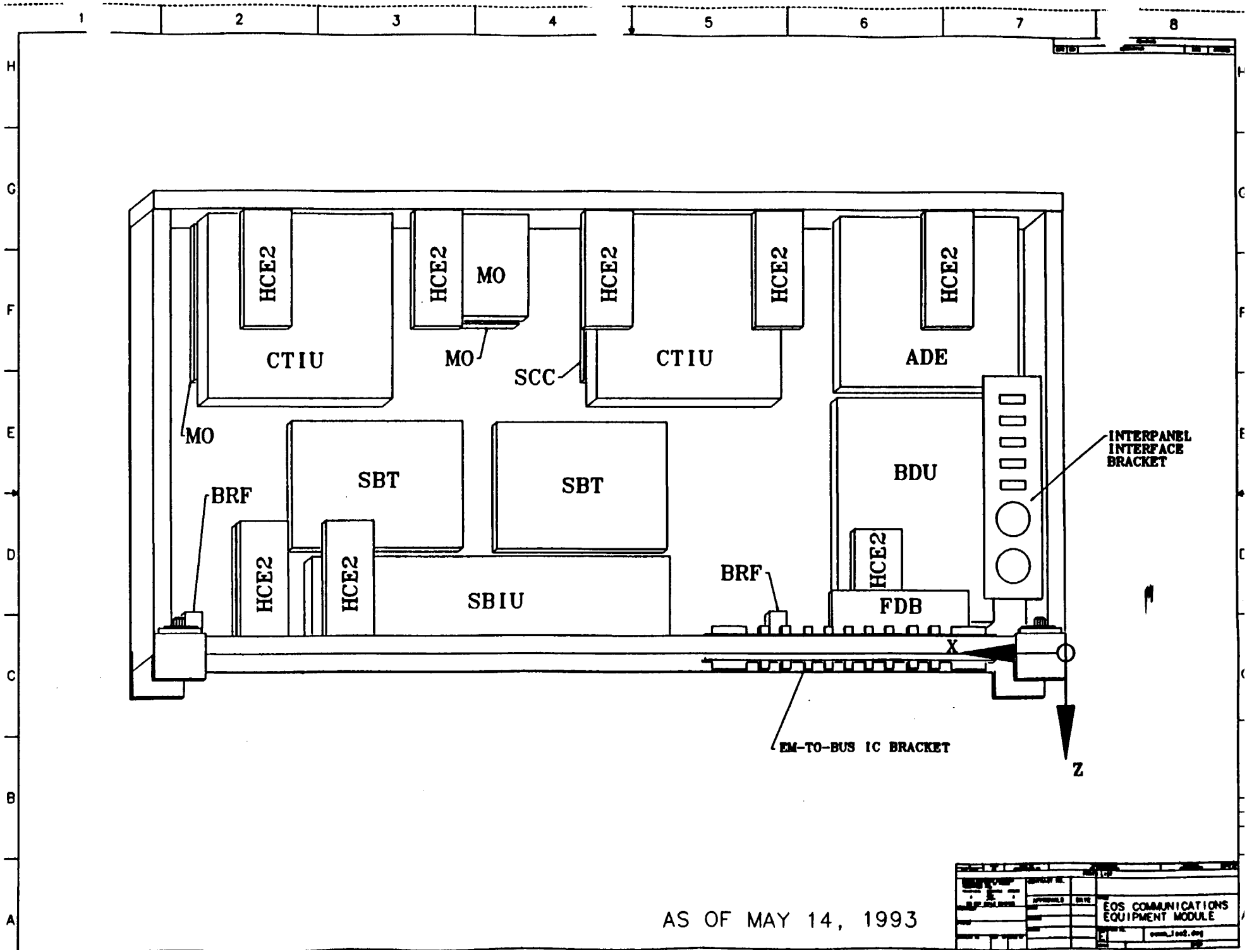
HCE2
CTIU
HCE2
MO
MO
HCE2
CTIU
SCC
HCE2
HCE2
ADE
MO
SBT
SBT
BDU
INTERPANEL INTERFACE BRACKET
BRF
HCE2
HCE2
SBIU
BRF
HCE2
FDB
X
EM-TO-BUS IC BRACKET
Z
AS OF MAY 14, 1993
EOS COMMUNICATIONS EQUIPMENT MODULE

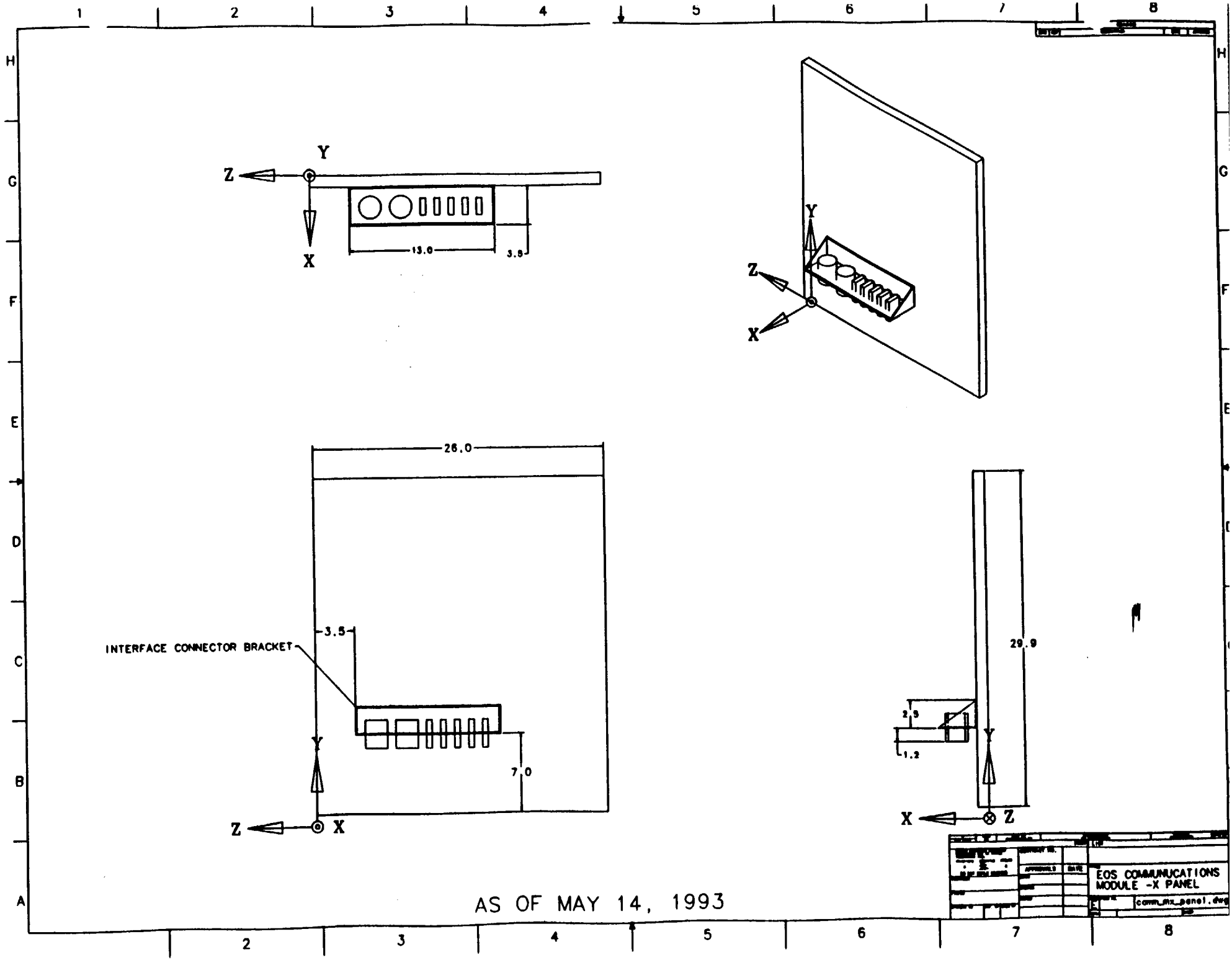
Y
Z
X
13.0
3.8
Y
Z
X
26.0
3.5
INTERFACE CONNECTOR BRACKET
7.0
Y
Z
X
29.9
2.5
1.2
Y
X
Z
EOS COMMUNICATIONS MODULE -X PANEL
comm_mx_panel.dwg
AS OF MAY 14, 1993

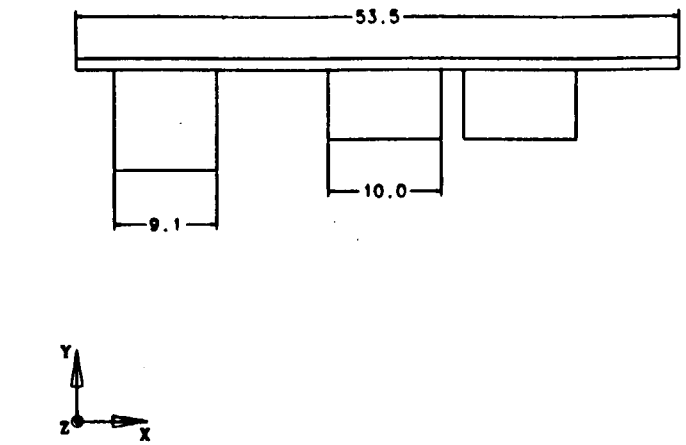

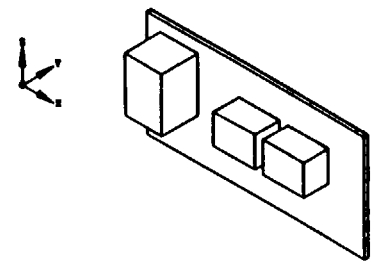

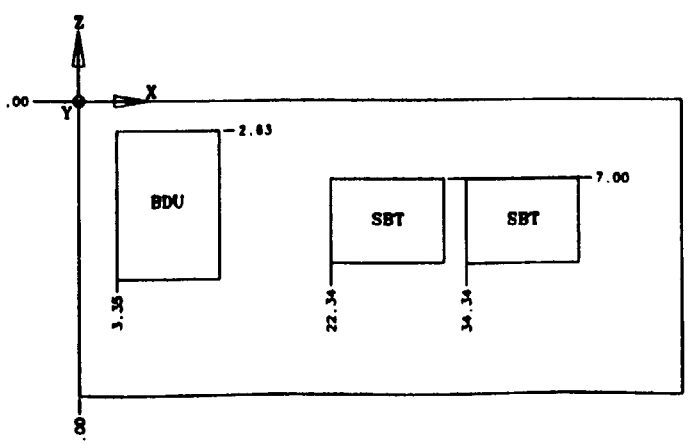

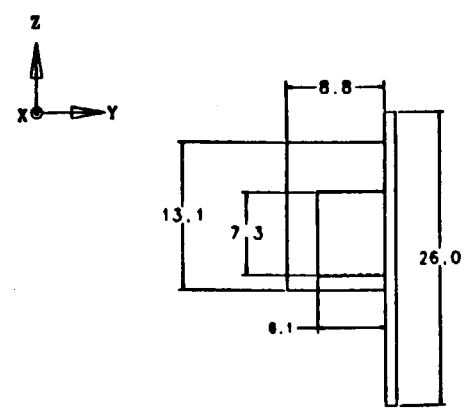

AS OF MAY 14, 1993

EOS COMMUNICATIONS MODULE +Y PANEL

comm_py_panel.dwg

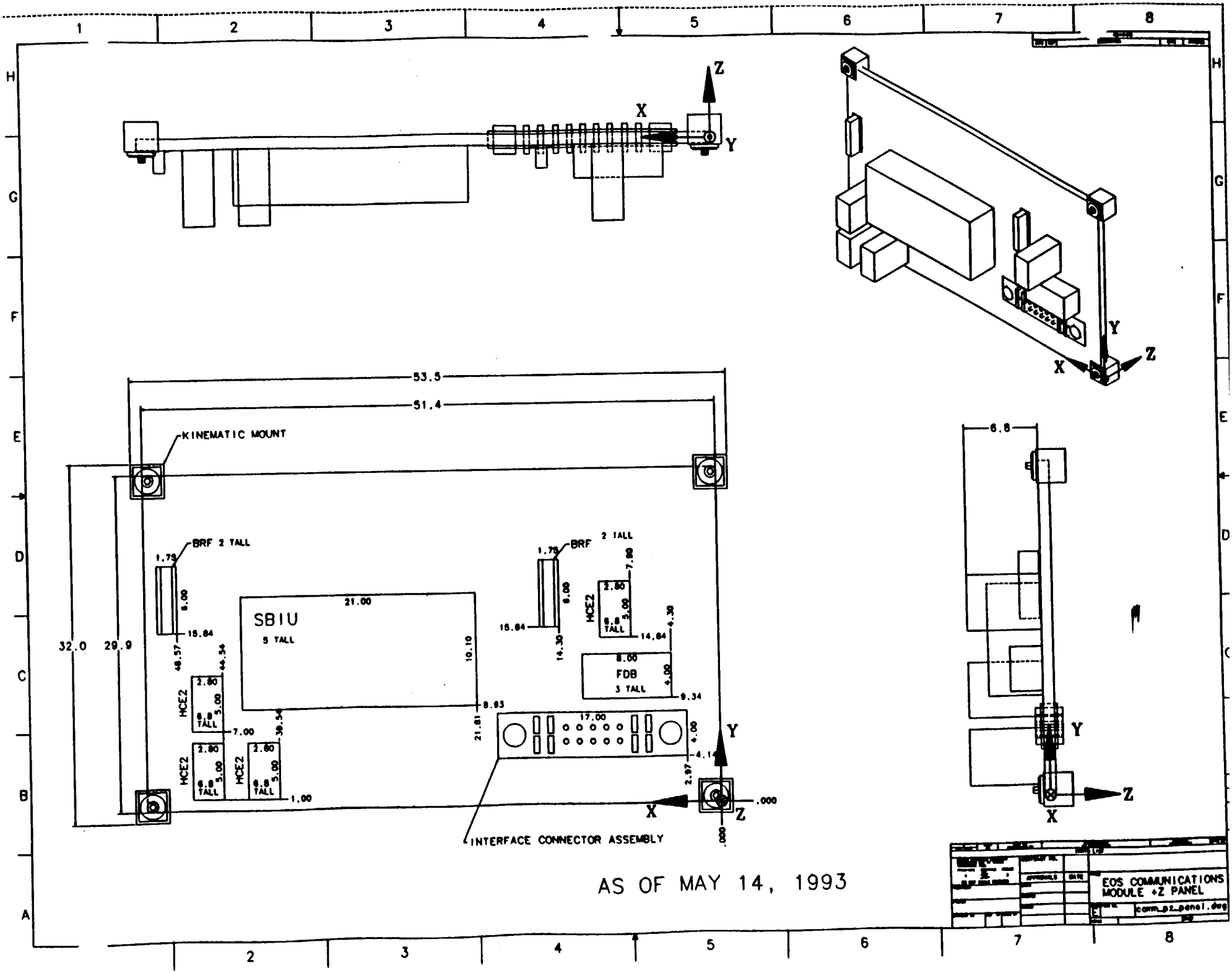
Z
X
Y
53.5
51.4
KINEMATIC MOUNT
BRF 2 TALL
1.75
6.00
15.84
48.57
44.54
32.0
29.9
SBIU
5 TALL
21.00
10.10
HCE2
2.80
5.00
6.8 TALL
7.00
30.54
1.00
8.93
21.81
17.00
4.00
4.14
2.97
.000
INTERFACE CONNECTOR ASSEMBLY
BRF 2 TALL
7.80
14.30
14.64
4.30
FDB
3 TALL
8.00
9.34
6.8
AS OF MAY 14, 1993
EOS COMMUNICATIONS
MODULE +Z PANEL
comm_pz_panel.dwg

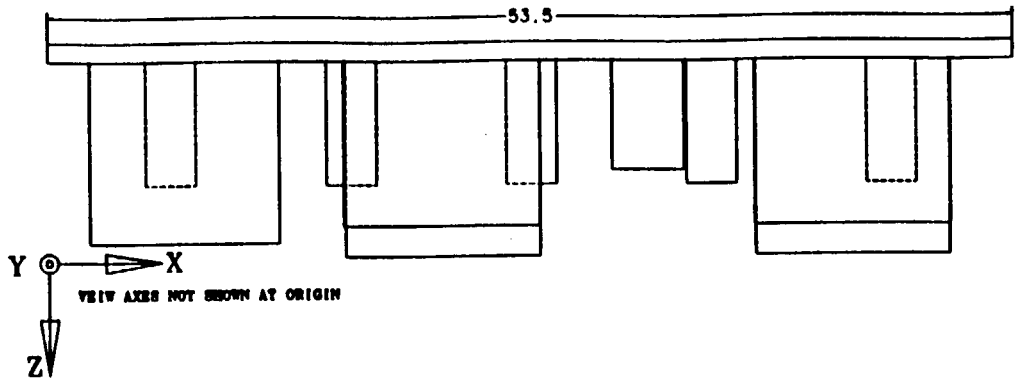

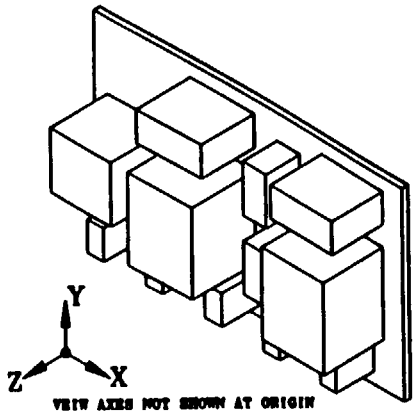

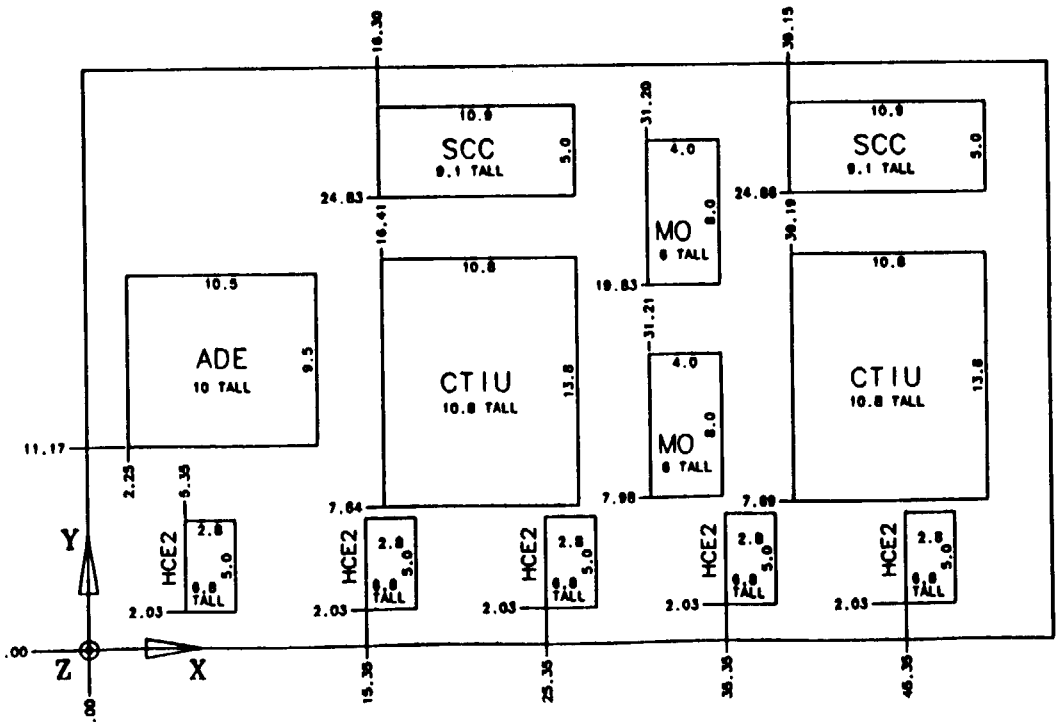

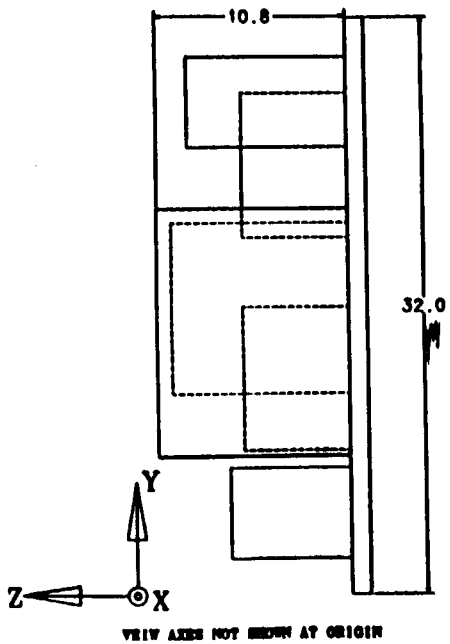

AS OF MAY 14, 1993

EOS COMMUNICATIONS MODULE -Z PANEL

comm_mz_panel

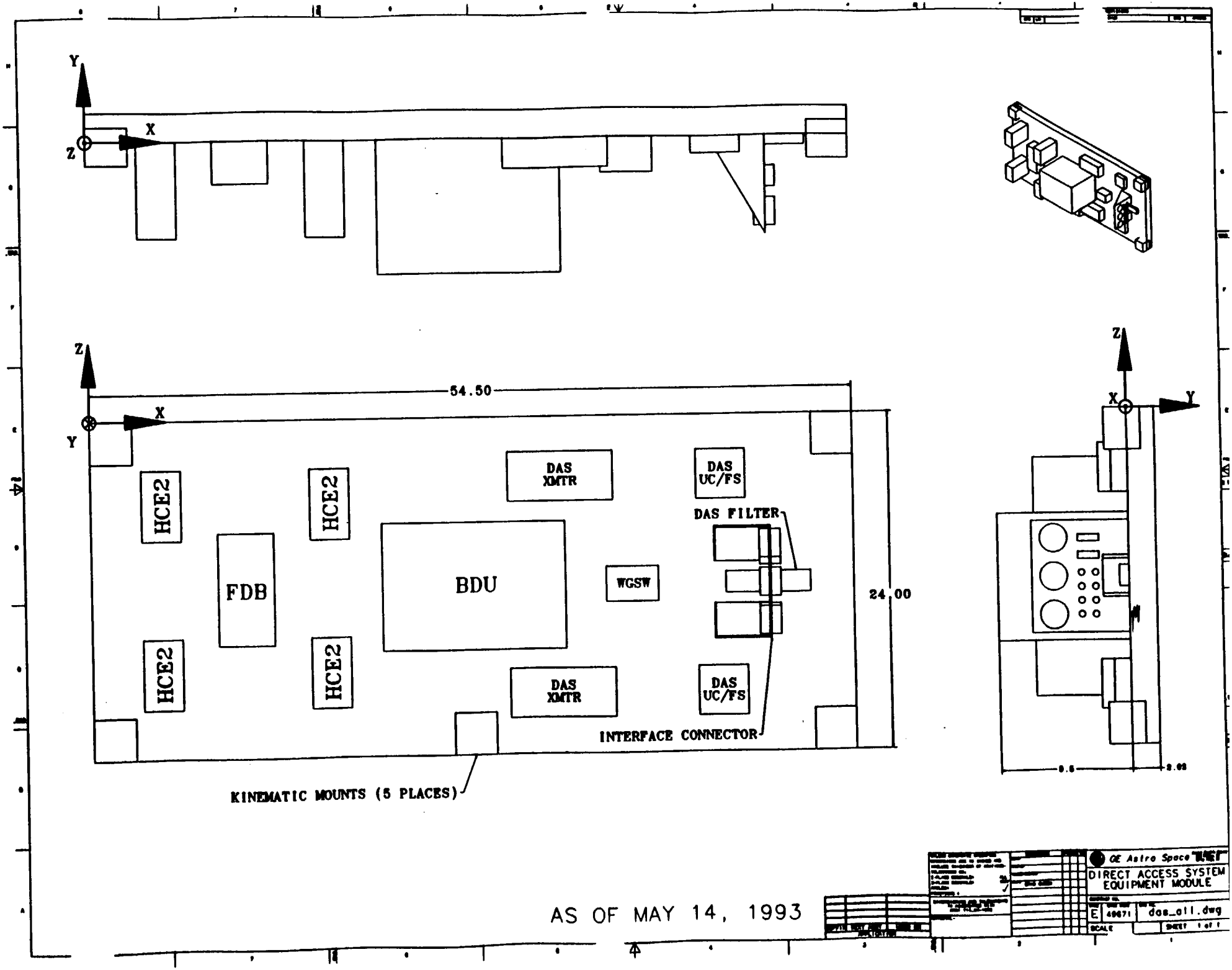

AS OF MAY 14, 1993

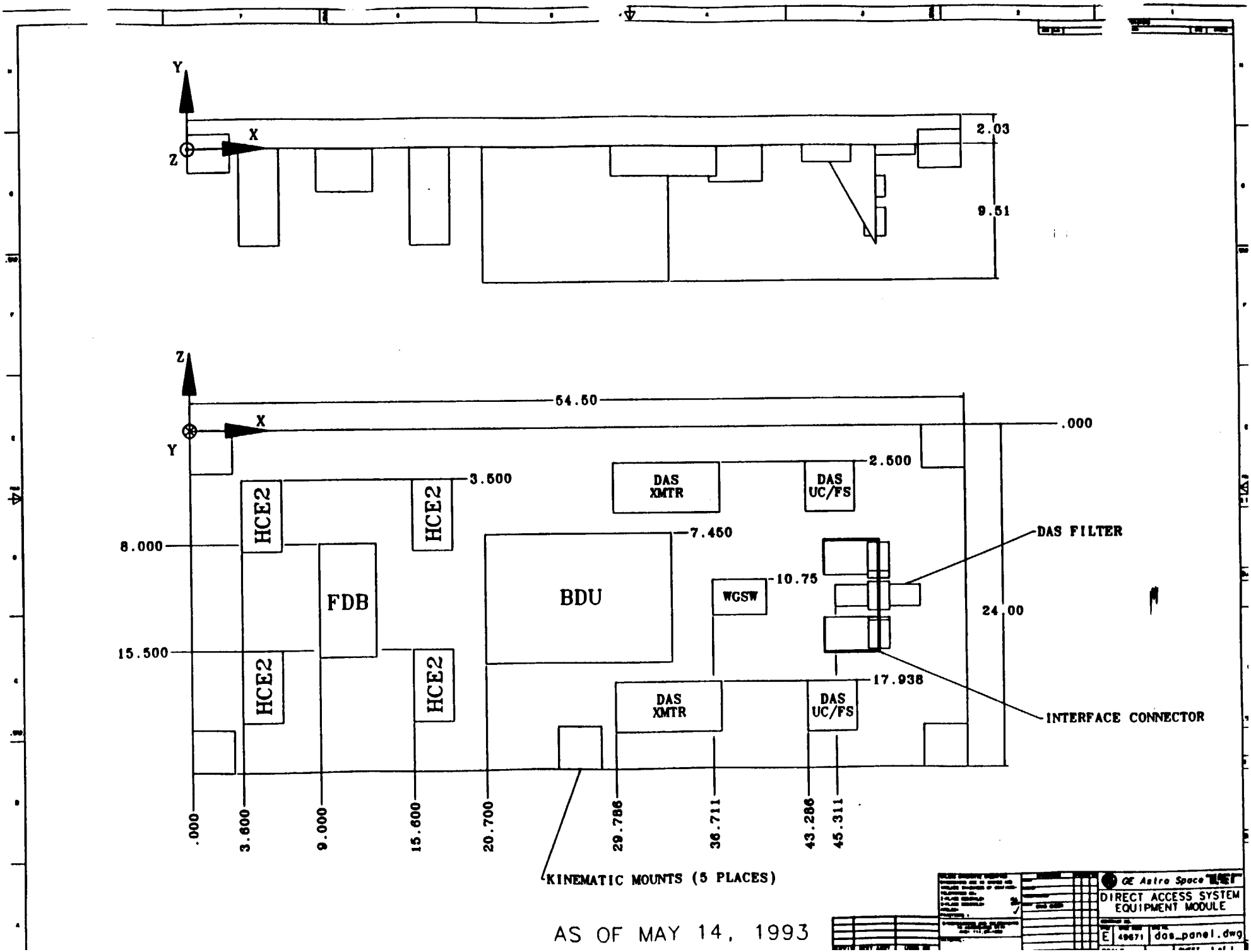

AS OF MAY 14, 1993

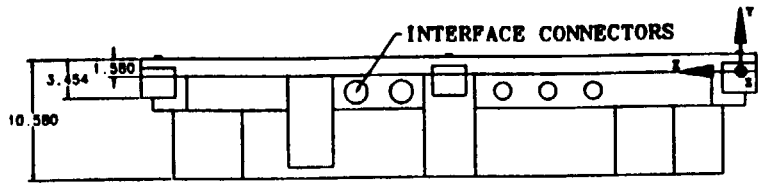

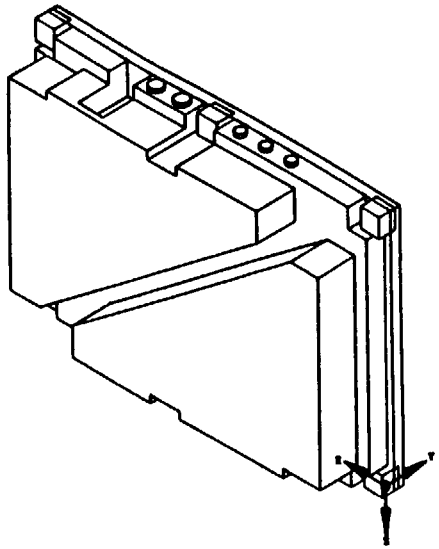

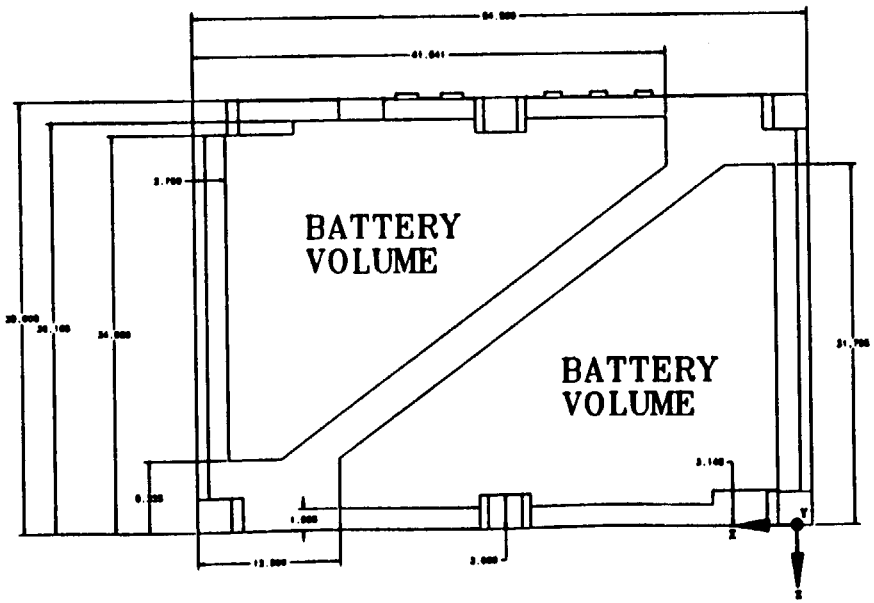

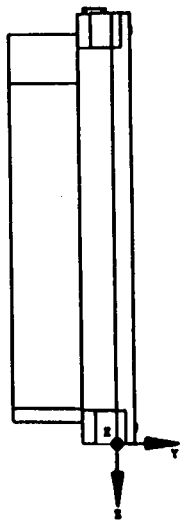

AS OF MAY 14, 1993

GE Astro Space

EOS HEXBAY
BATTERY MODULE

E 49671 hexbat.dwg

SCALE SHEET

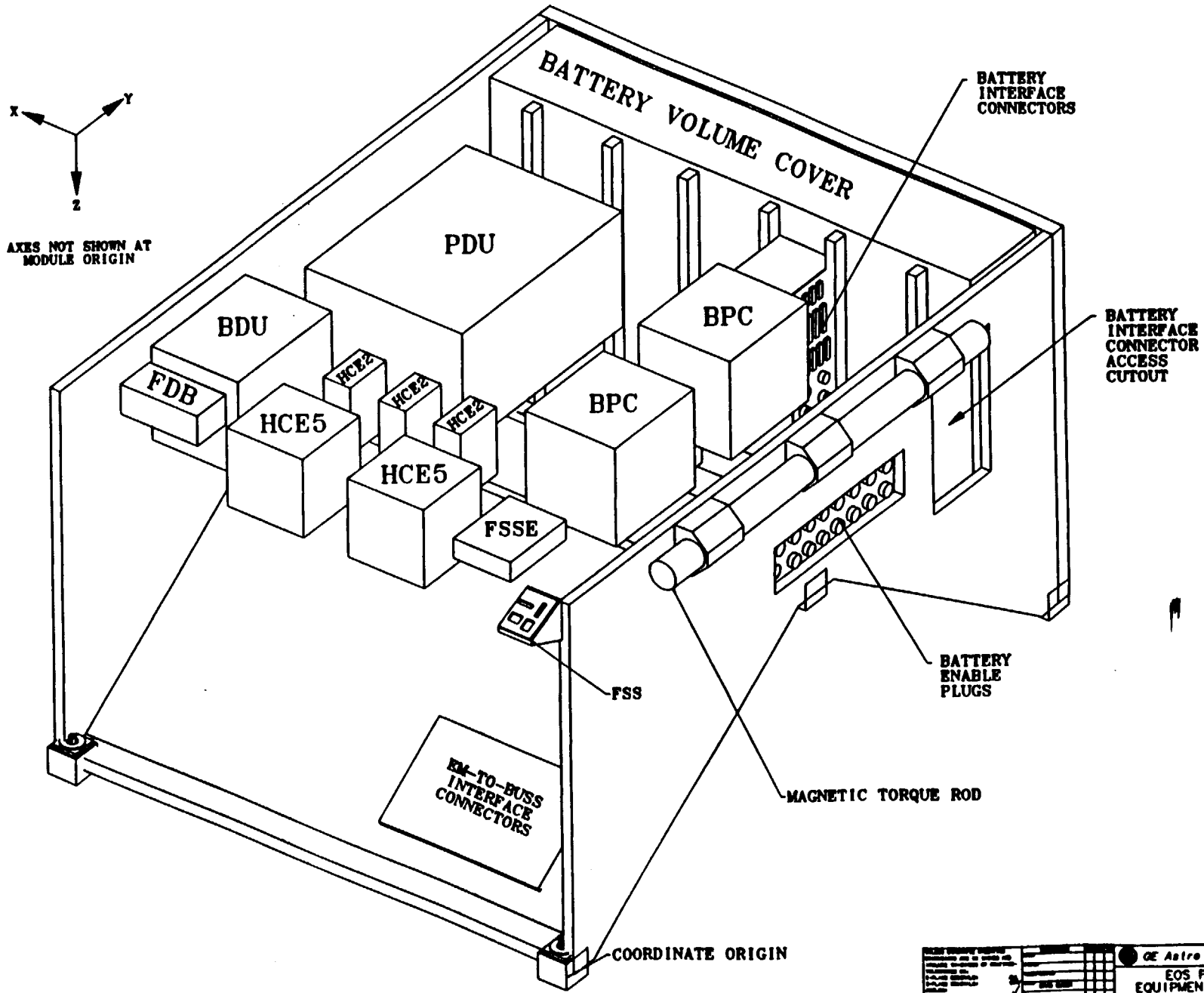

AS OF MAY 14, 1993

GE Astro Space
EOS POWER EQUIPMENT MODULE
E 49671 pmod_all.dwg

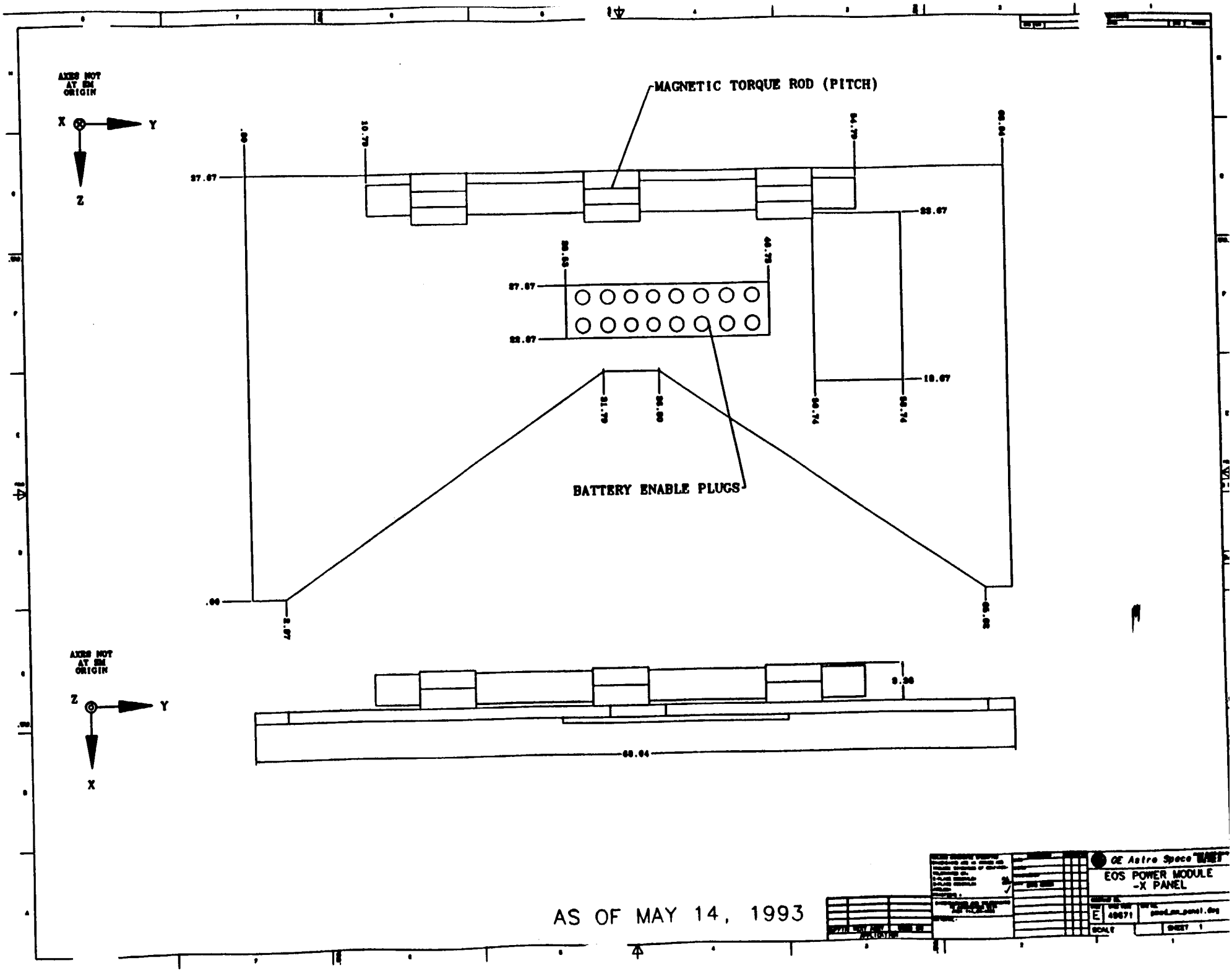
AXES NOT AT SM ORIGIN
X
Y
Z
MAGNETIC TORQUE ROD (PITCH)
BATTERY ENABLE PLUGS
AXES NOT AT SM ORIGIN
Z
Y
X
GE Astro Space
EOS POWER MODULE
-X PANEL
E
AS OF MAY 14, 1993

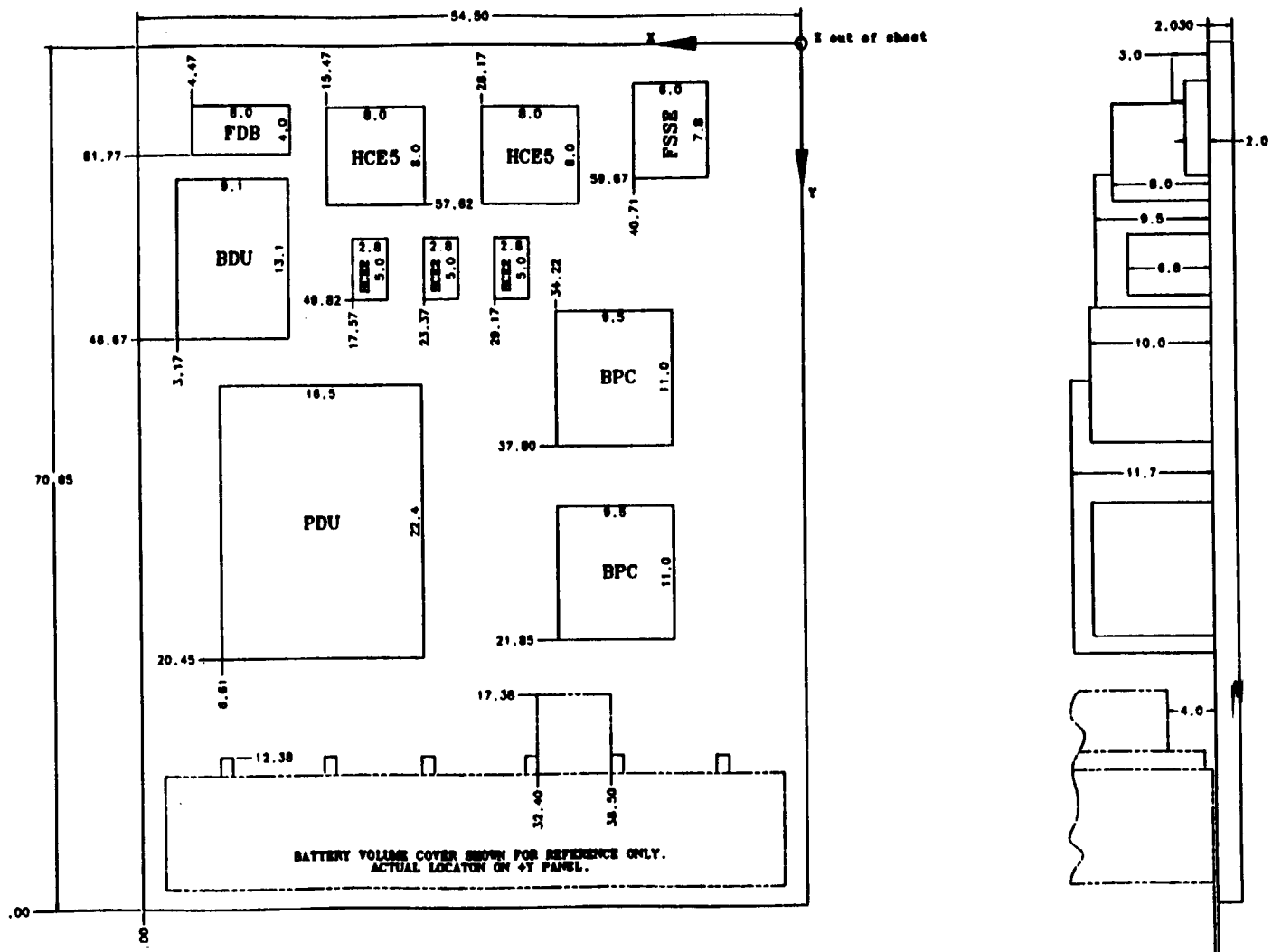

AS OF MAY 14, 1993

GE Astro Space

EOS POWER EM
-Z PANEL

E 49871

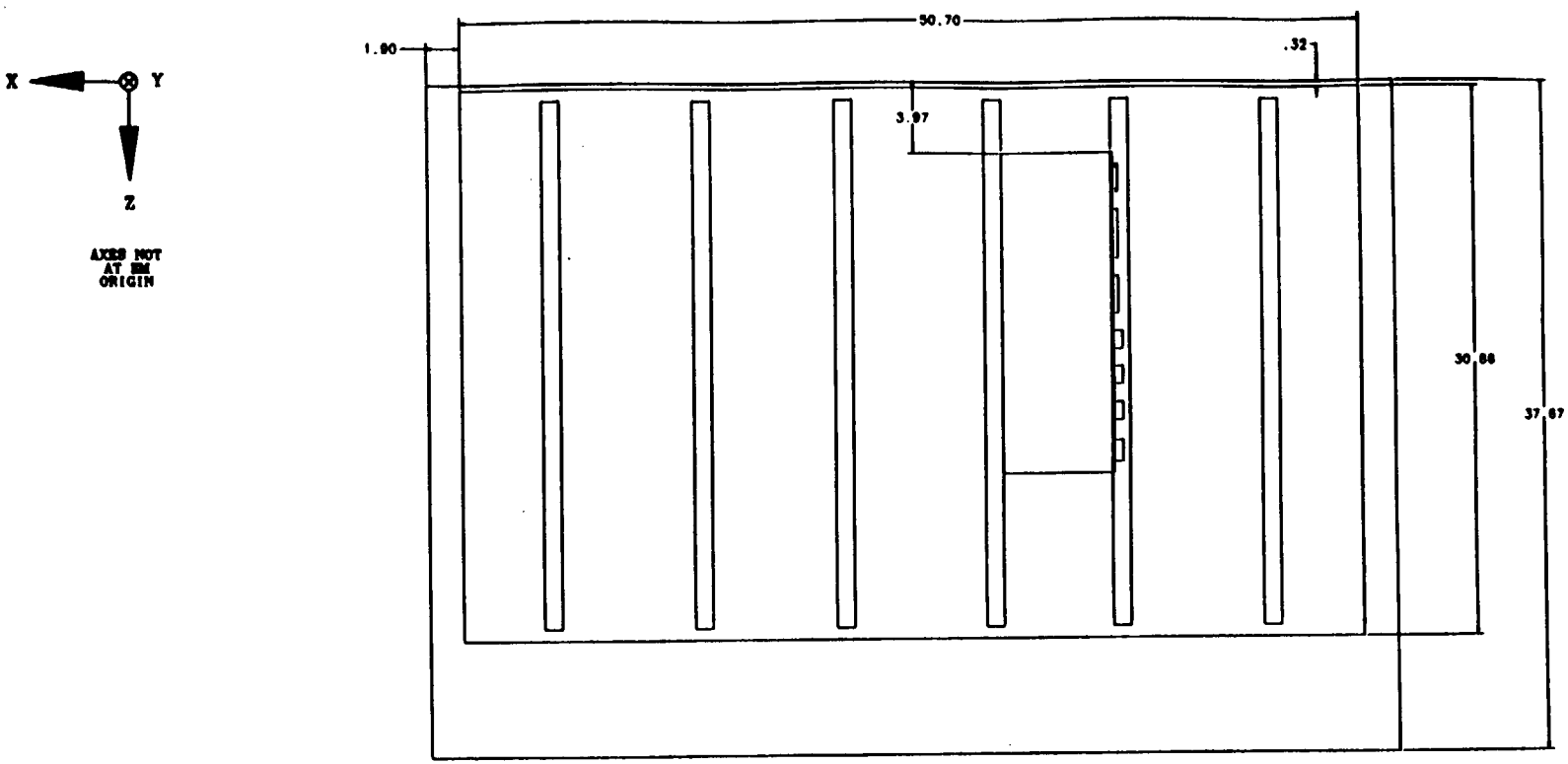

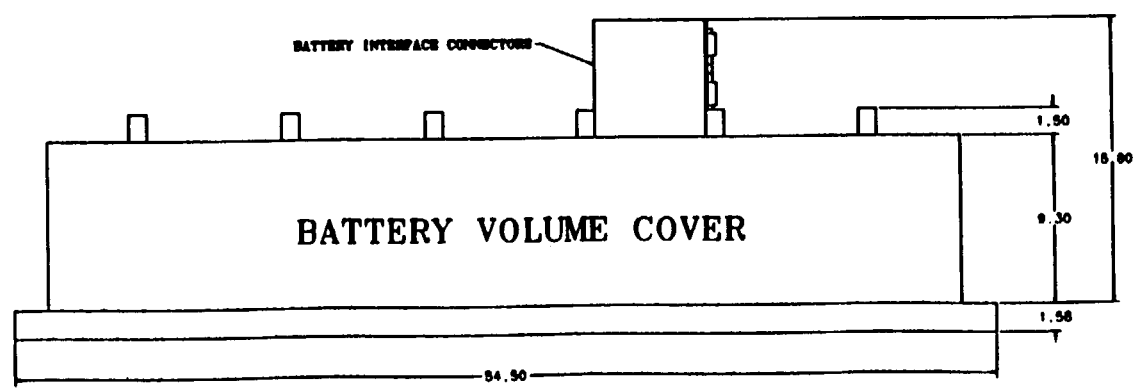

AS OF MAY 14, 1993

GE Astro Space

EOS POWER MODULE
BATTERY PANEL

E 49871 pmod_py_panel.dwg

SCALE

SHEET 1 of 1

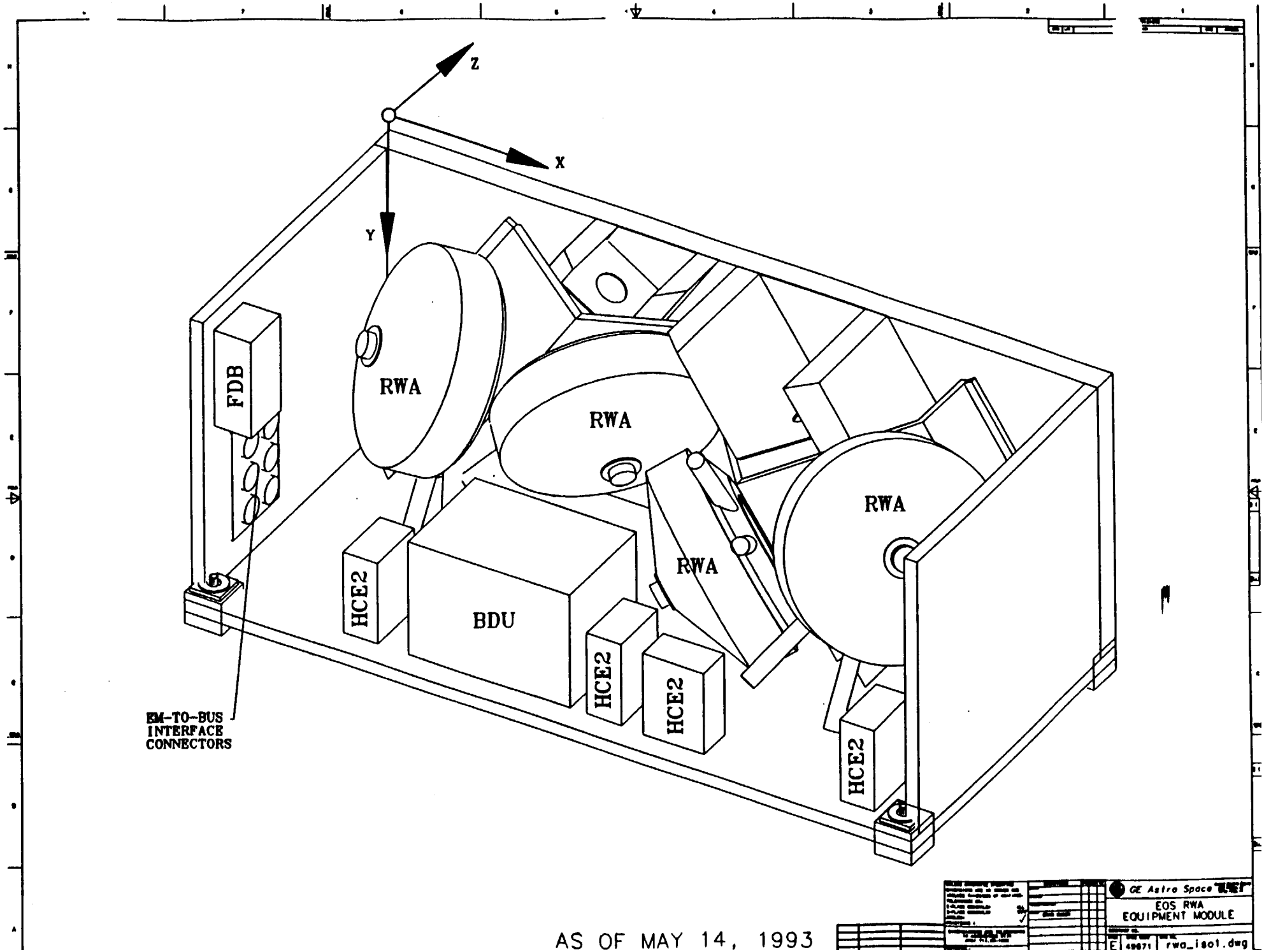

AS OF MAY 14, 1993

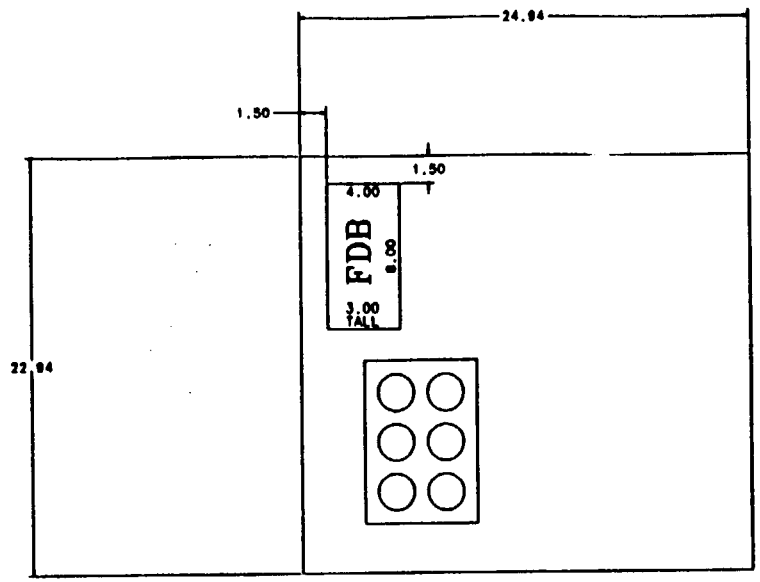

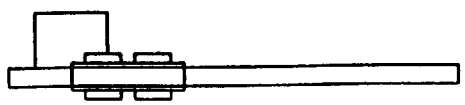

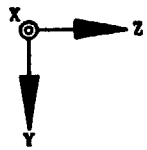

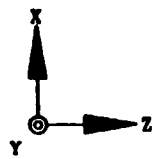

AS OF MAY 14, 1993

GE Astro Space

EOS RWA MODULE
-X PANEL

E | 49671 | rwa_mx_panel.dwg

SCALE | SHEET 1

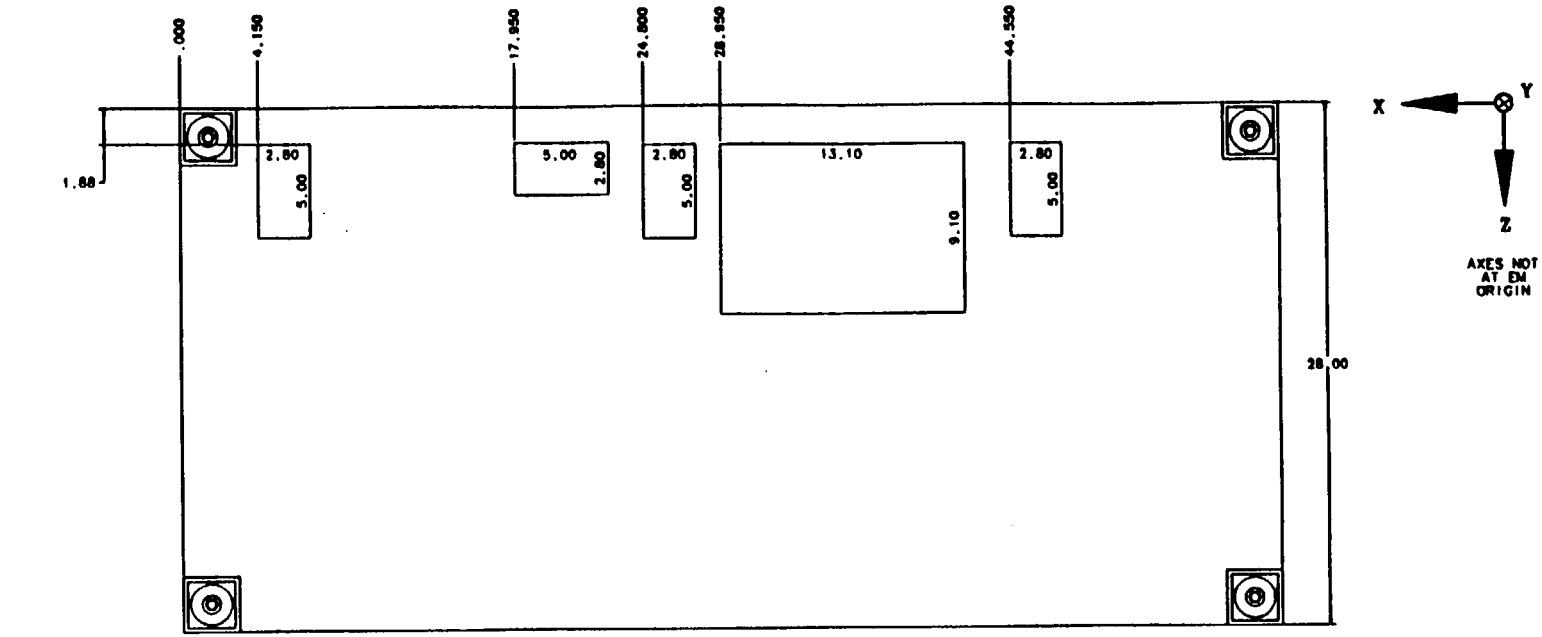

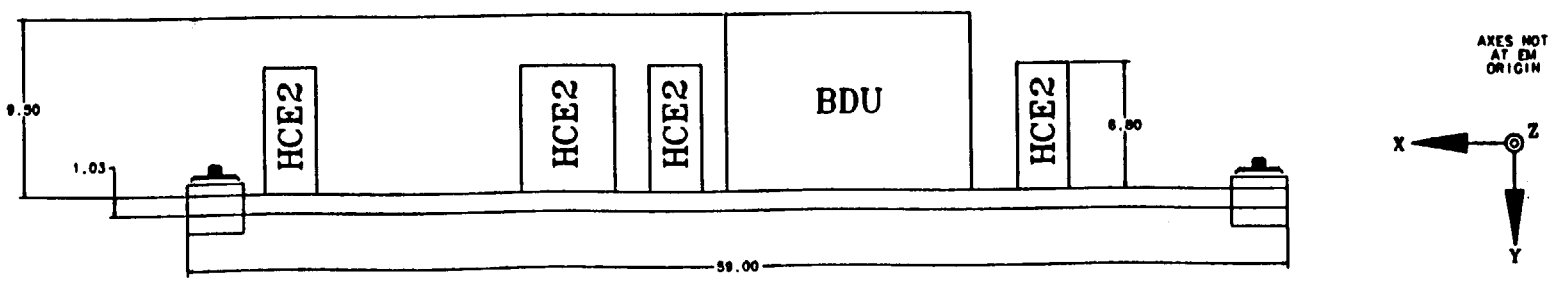

GE Astro Space

EOS RWA MODULE
+Y PANEL

AS OF MAY 14, 1993

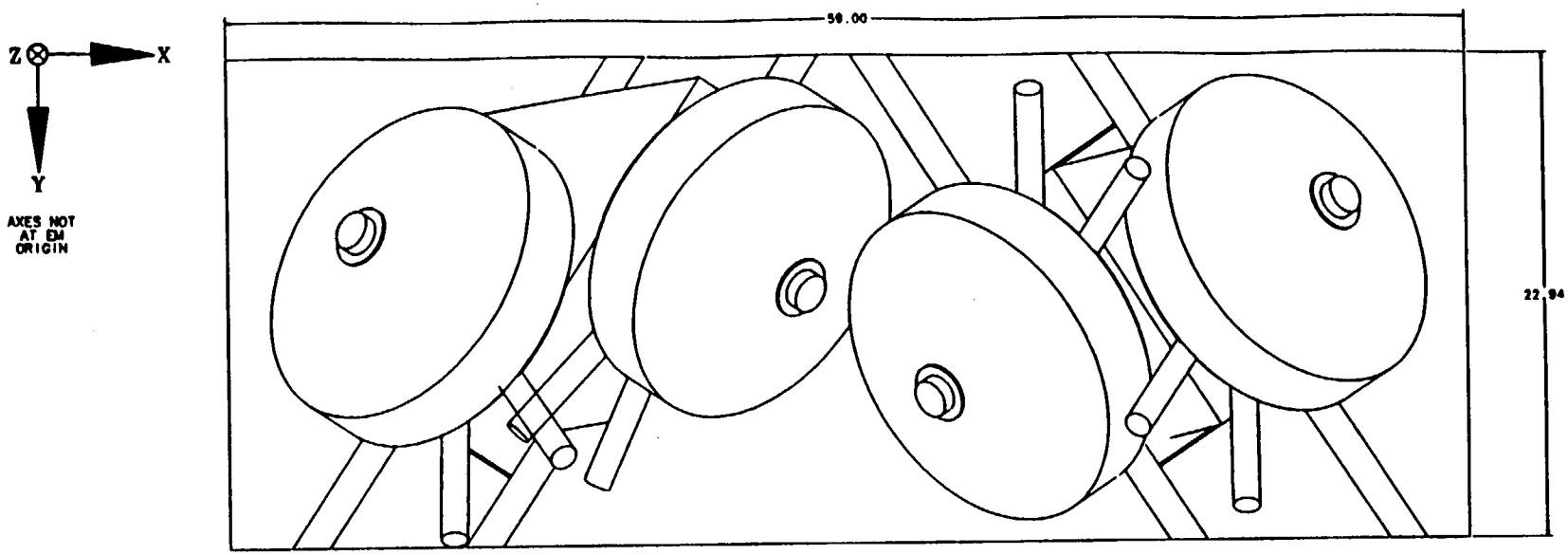

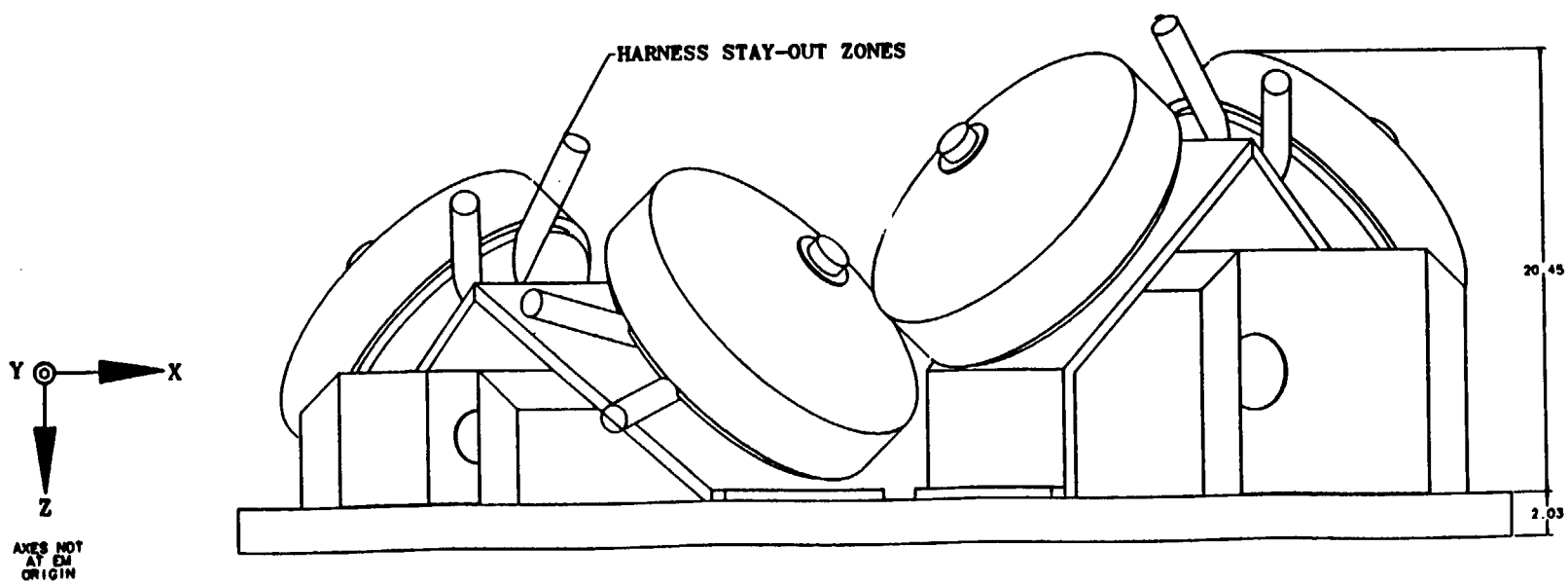

AS OF MAY 14, 1993

GE Astro Space

EOS RWA MODULE
+Z PANEL

E 49671 rwa_pz_panel.dwg

SCALE SHEET

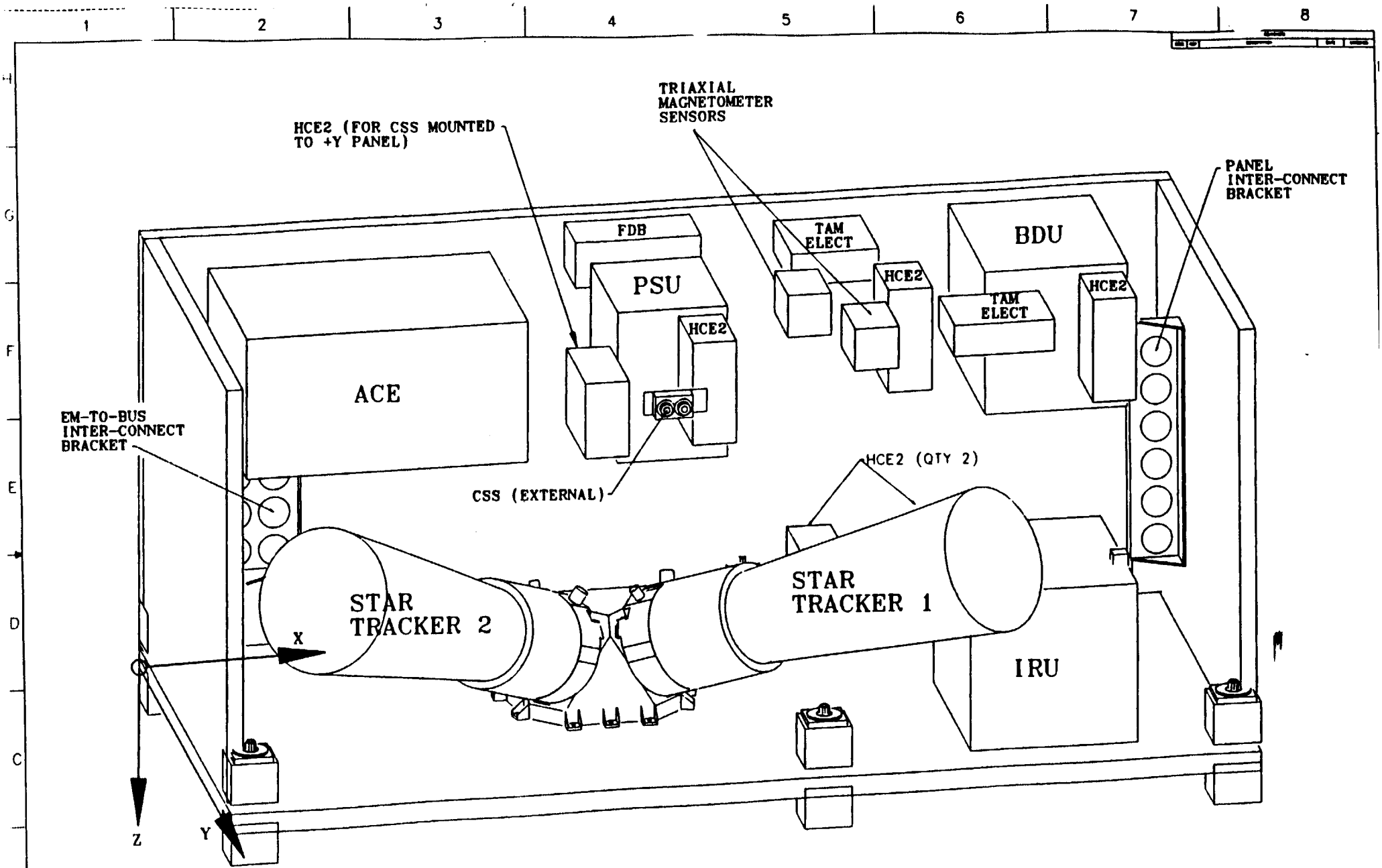

GN&C SENSOR MODULE (SEN)

AS OF MAY 14, 1993

EOS GN&C SENSOR EQUIPMENT MODULE

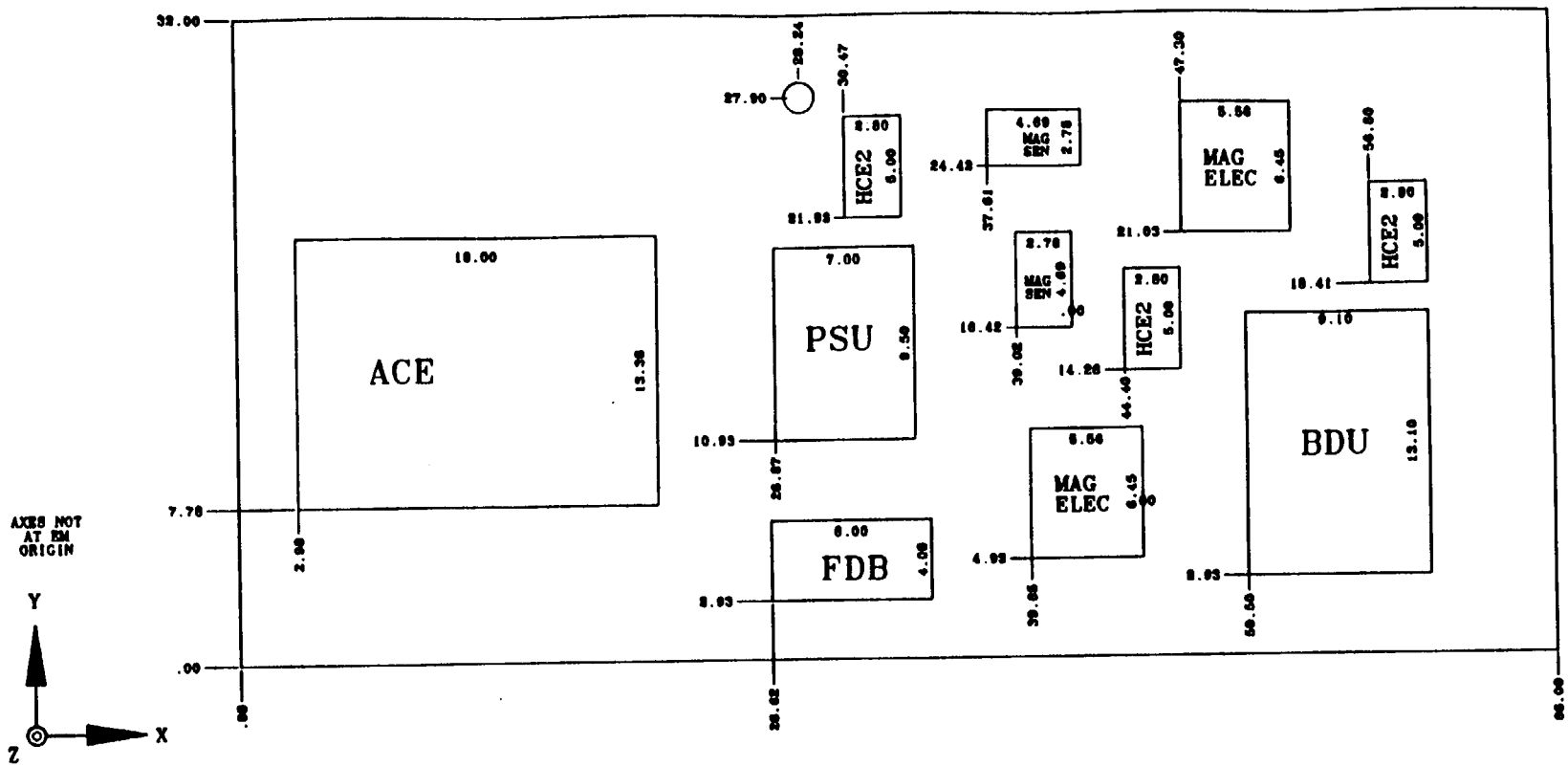

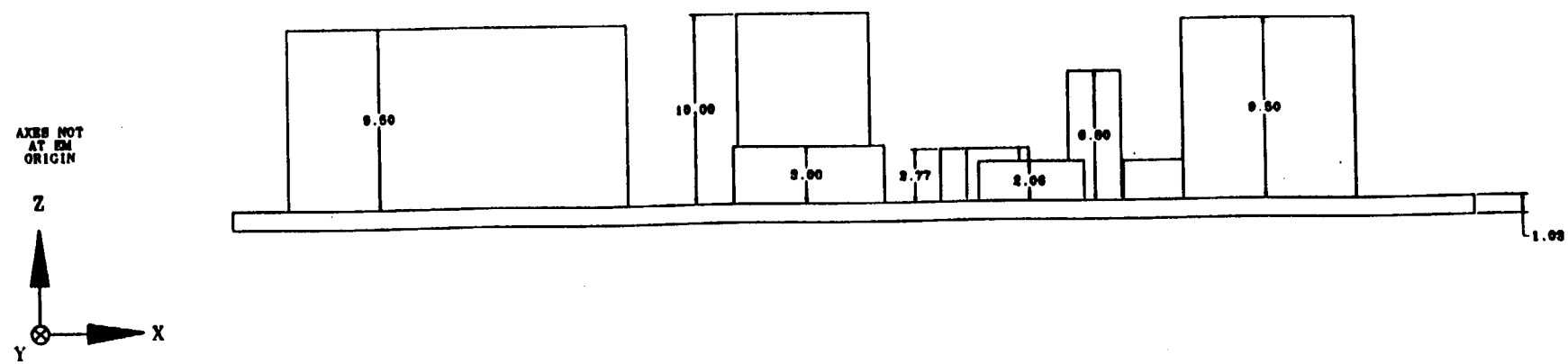

AS OF MAY 14, 1993

GE Astro Space

EOS SENSOR MODULE
-Z PANEL

sen_mz_panel.dwg

SHEET 1

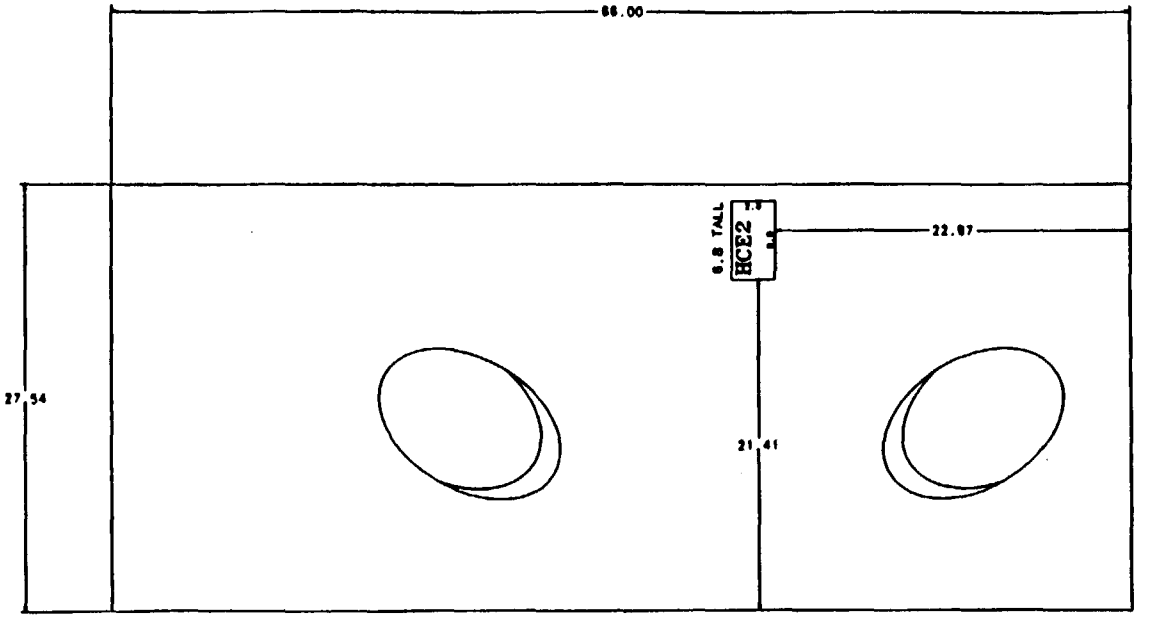

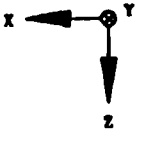

AXES NOT
AT EM
ORIGIN

AS OF MAY 14, 1993

GE Astro Space

EOS SENSOR MODULE
+Y PANEL

E 49671 sen_py_panel.dwg

SCALE

SHEET 1

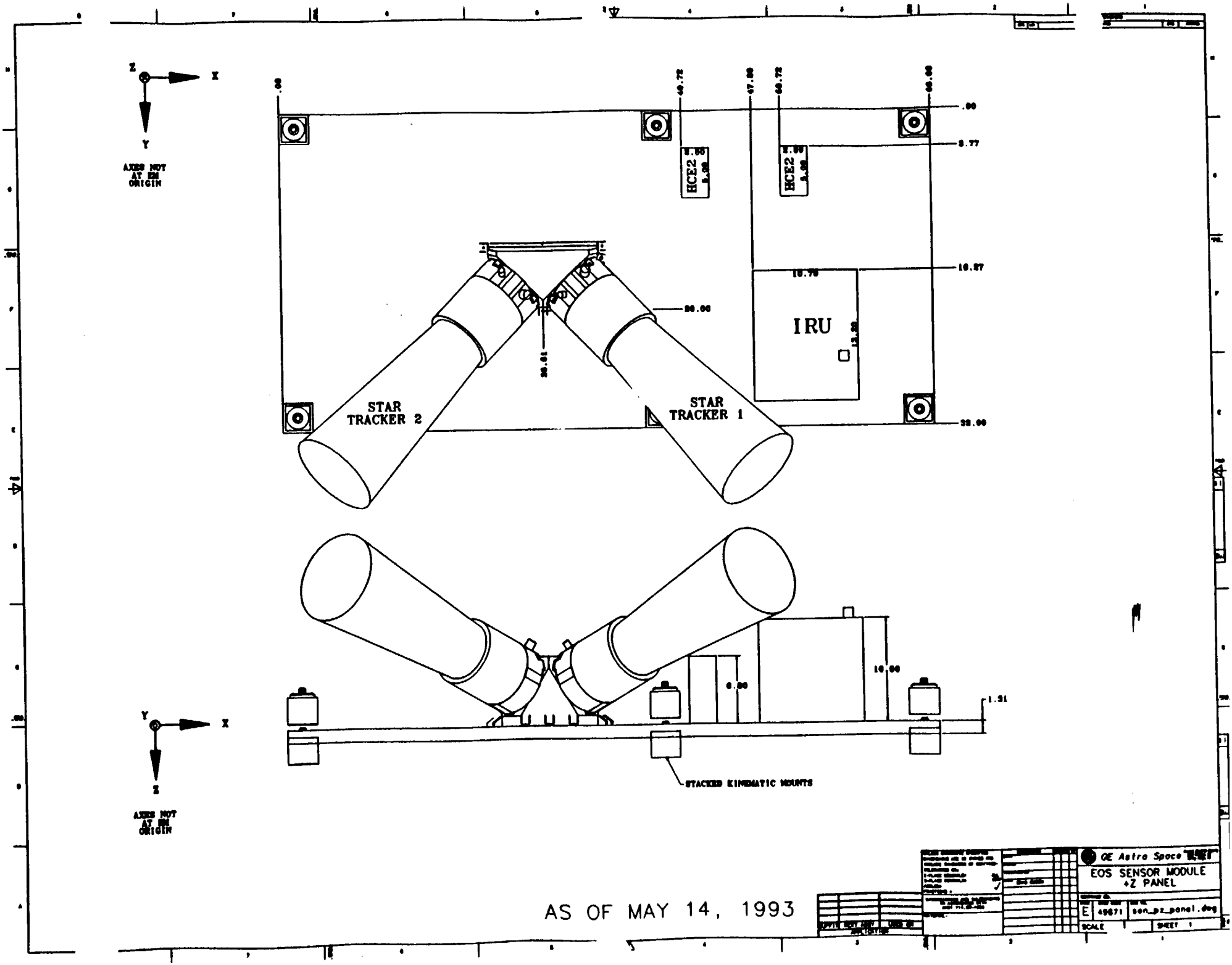

AS OF MAY 14, 1993

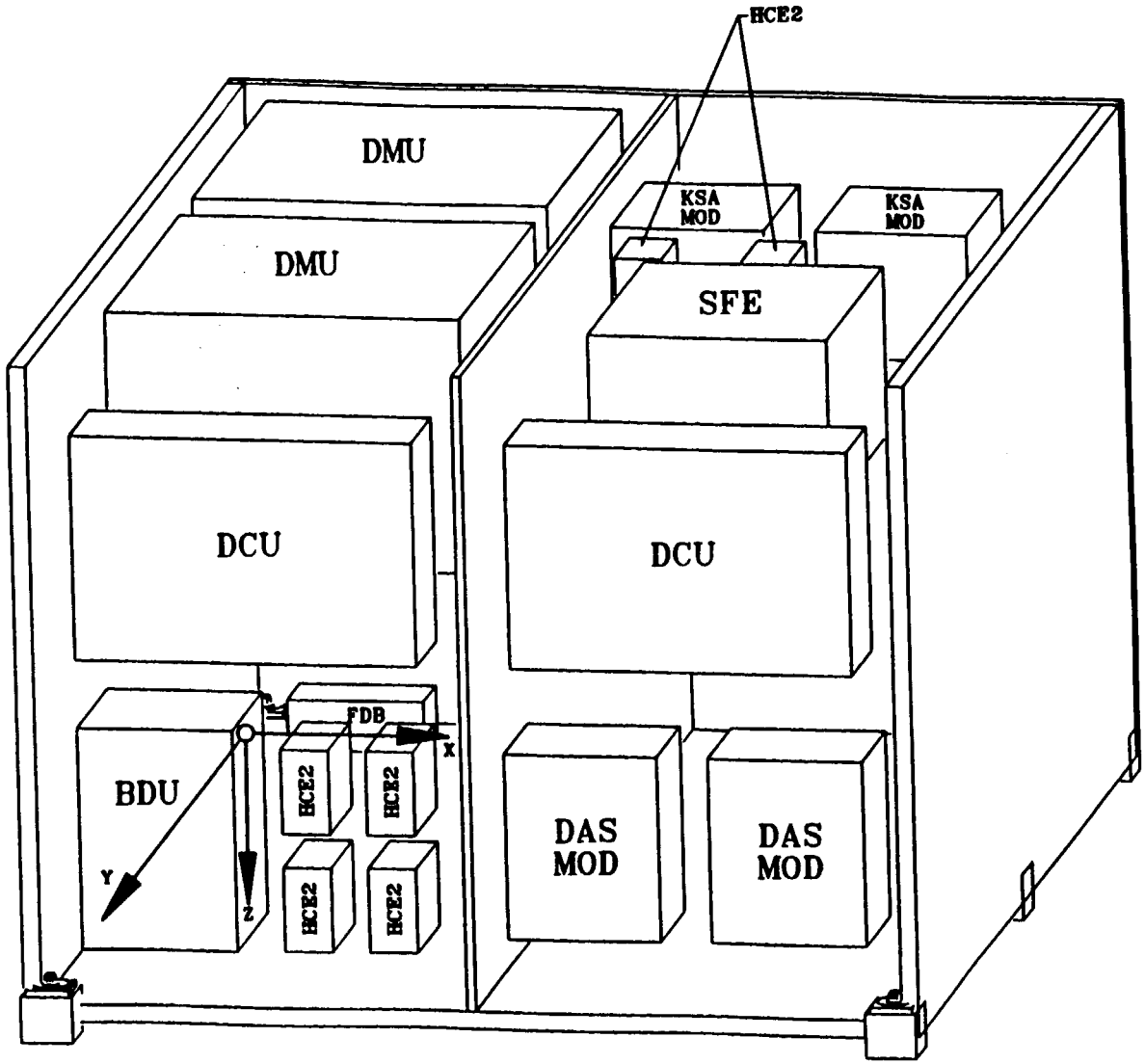

AS OF MAY 14, 1993

GE Astro Space

EOS SOLID-STATE RECORDER MODULE

E 49871 sst_isol.dwg

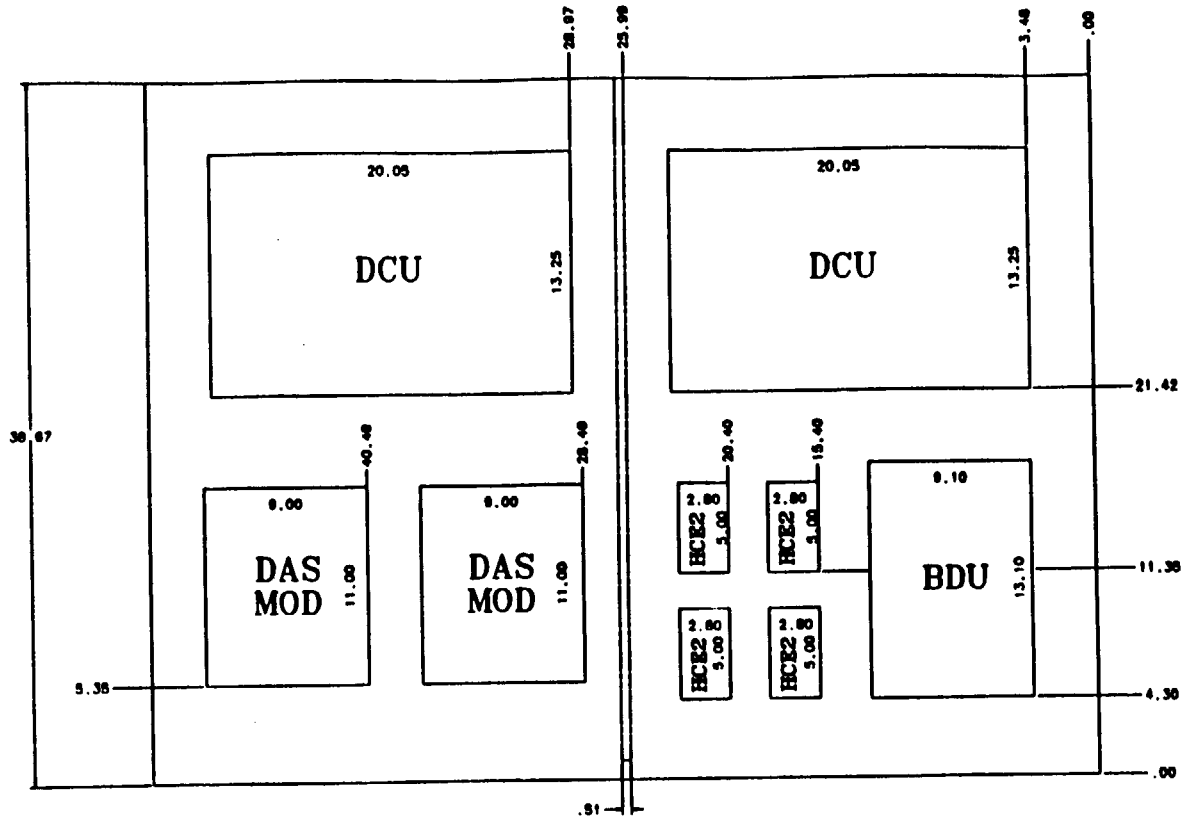

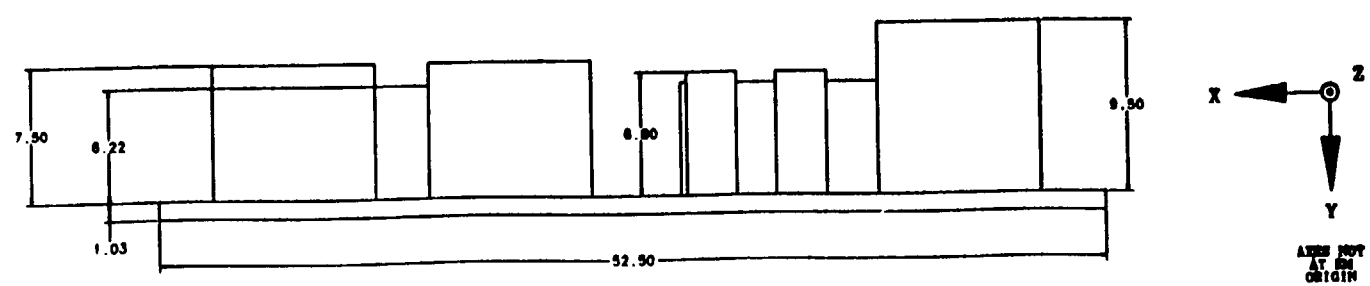

AS OF MAY 14, 1993

GE Astro Space

EOS RECORDER MODULE +Y PANEL

E 49671 sat_py_panel.dwg

SCALE: SHEET 1

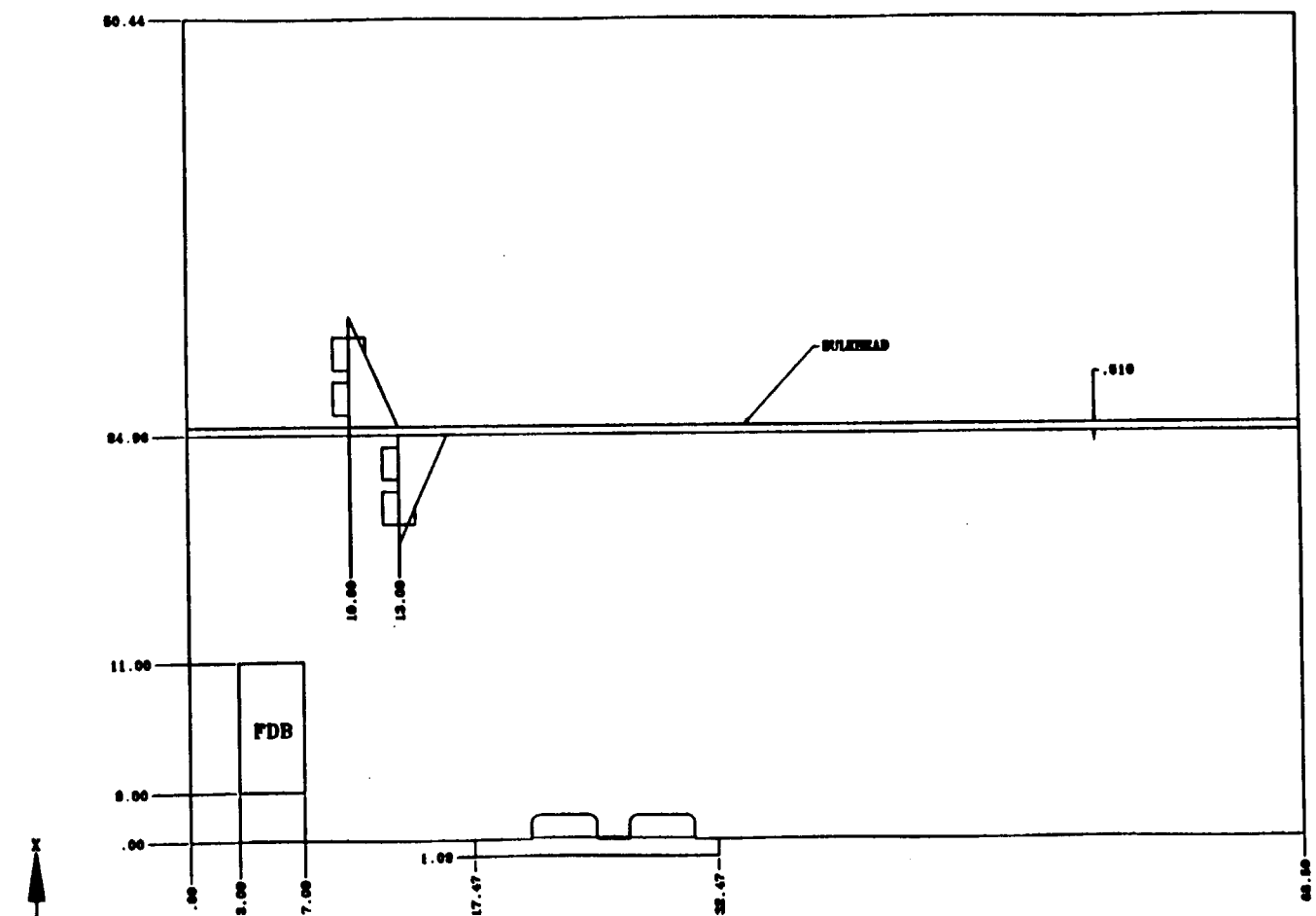

AXES NOT AT EM ORIGIN

GE Astro Space

EOS RECORDER MODULE +Z PANEL

E 49871 eos_rz1_panel.dwg

AS OF MAY 14, 1993

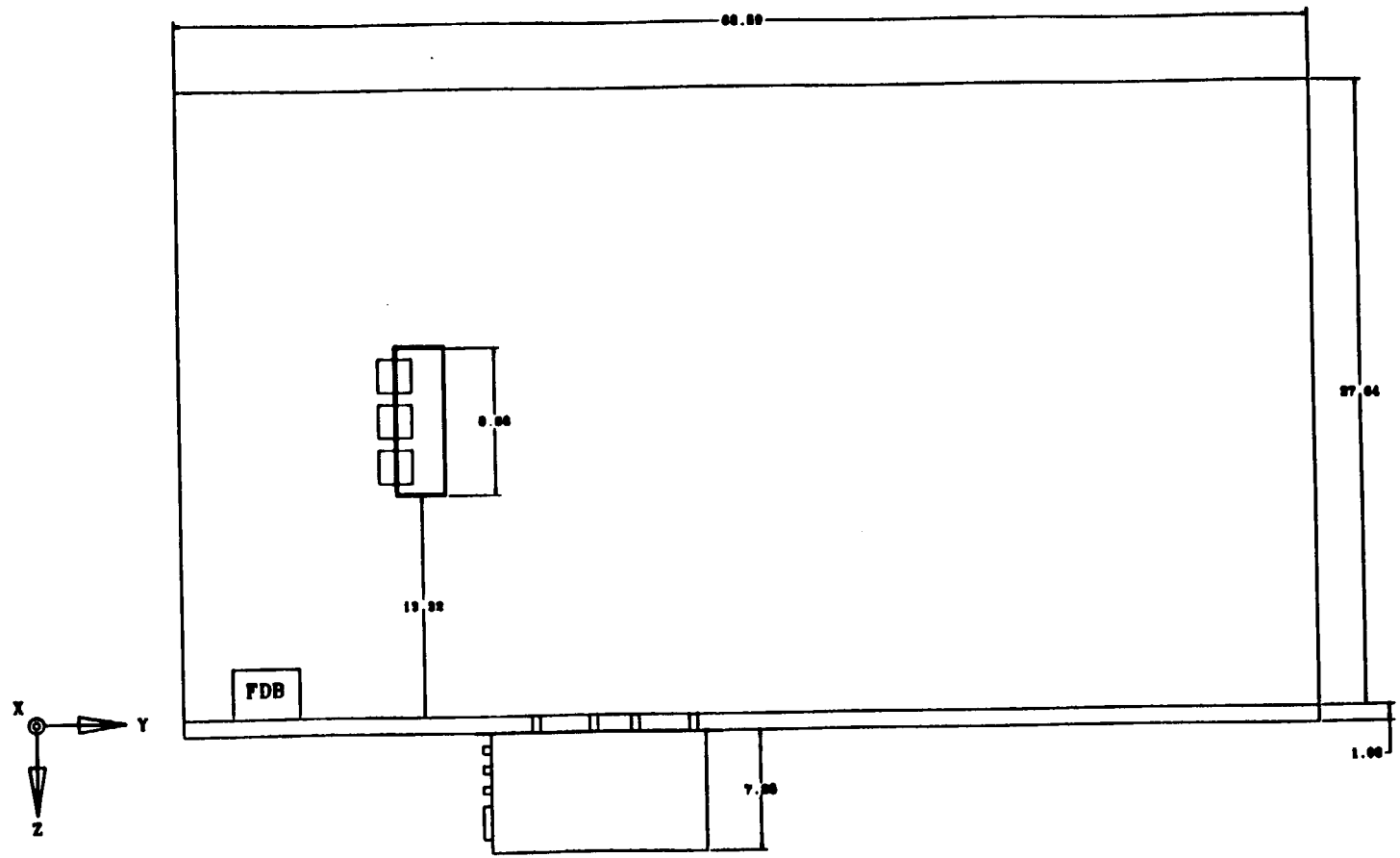

AS OF MAY 14, 1993

GE Astro Space

EOS RECORDER
MODULE +Z PANEL

E 49671

SCALE

SHEET 1

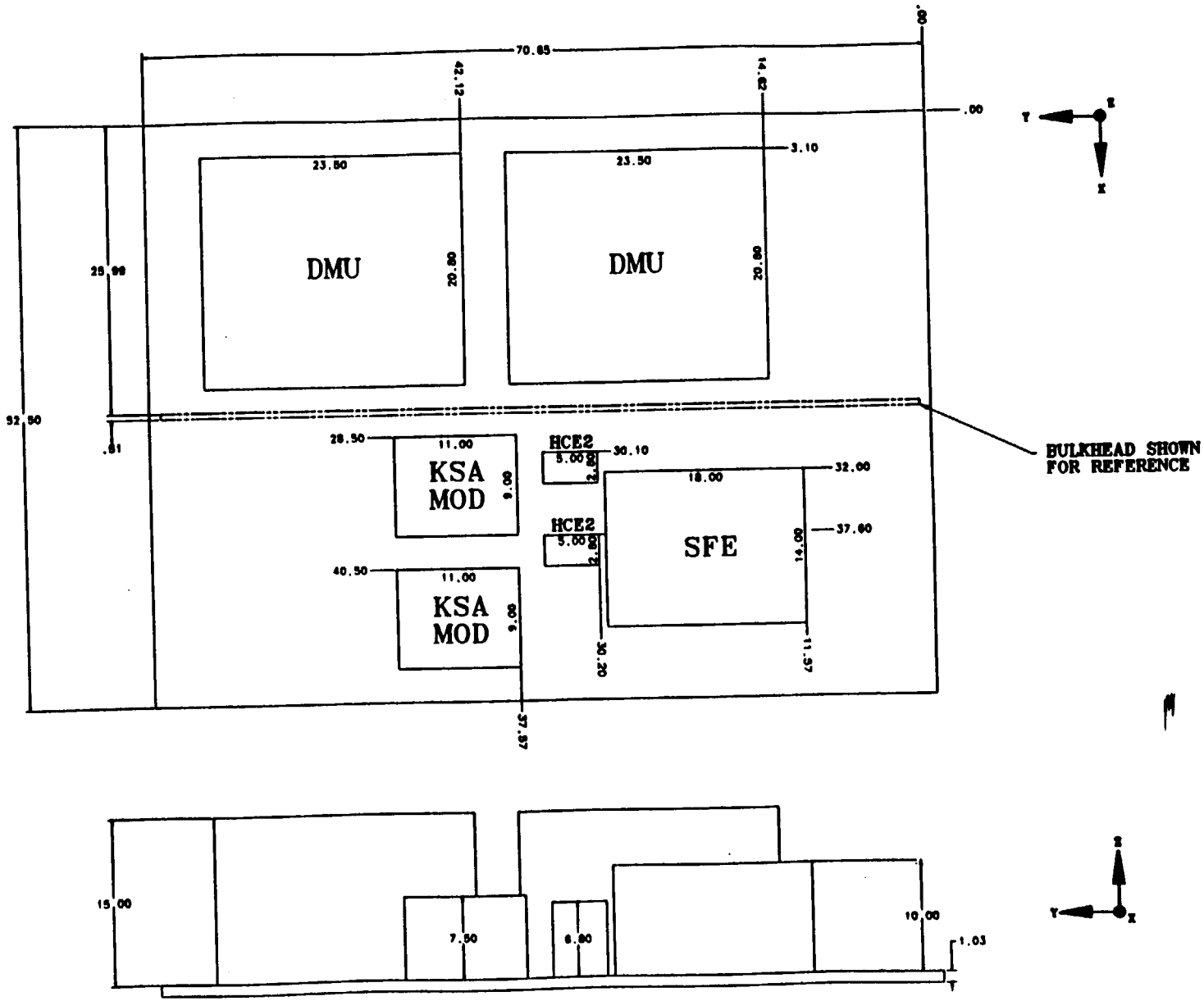

GE Astro Space

EOS RECORDER
MODULE -Z PANEL

AS OF MAY 14, 1993

MARTIN MARIETTA
ASTRO SPACE

EOS-DN-CNF-018
Revision A

DESIGN NOTE

TITLE: EOS-AM Spacecraft Launch/On-Orbit Deployed Configuration Layouts

AUTHOR: S. Raymus SDR

AUTHOR'S MANAGER: C. Faust DATE 7/8/93

SE&I MANAGER: S. Carey DATE 7/8/93

CHIEF ENGINEER: D. Longcoy DATE 7/8/93

REVISIONS

LETTER	DESCRIPTION	DATE	AUTHOR
-	Initial release	5/13/92	O. Regalado
A	Updated for Spacecraft PDR to reflect design changes since Subsystem PDR	7/8/93	S. Raymus

EOS Form
006-01/01/93

DCC030993

MARTIN MARIETTA
ASTRO SPACE

DESIGN NOTE SUMMARY

DN#: EOS-DN-018 **Revision:** A **Date:** July 8, 1993

Title: EOS-AM Spacecraft Launch/On-Orbit Deployed Configuration Layouts

Author: S. Raymus **Source ID (ESTA, PD, Memo, etc.):**

Purpose/Questions Answered:

To present the EOS-AM spacecraft configuration baseline for the Spacecraft PDR. Also to briefly describe the changes to the baseline since Spacecraft Bus and Subsystem PDRs.

Summary/Answers:

Recommendations: (Be Specific)	Accepted	Rejected	Baselined	Date

Open Items/Action Required	Responsible Person	Due Date

Comments

Form Completed By S D Raymus **Date** 7/7/93 **Page** ___ of DCC030993

1 INTRODUCTION

The purpose of this design note is to present the stowed and deployed layouts of the EOS-AM spacecraft and to give an overview of significant features and recent design modifications.

1.1 Stowed Configuration

The stowed configuration represents the state of the spacecraft when it is installed in the fairing of the launch vehicle (see Figure 1) and immediately after separation (see Figure 2). In this state, all components which must extend large distances from the spacecraft structure in order to operate (i.e. high gain antenna and solar array) are retracted and fixed to the spacecraft structure with remotely actuated release devices. The fairing shown has the dimensions of the Atlas IIAS with 36" stretch, and the spacecraft origin is located at the geometric center of bulkhead-1.

1.2 Deployed Configuration

The deployed configuration represents the state of the spacecraft when it is operational on-orbit. This is illustrated in Figures 3 and 4.

2 CONFIGURATION DESCRIPTION

The configurations shown in Figures 1 through 4 have evolved over a period of time, and revisions have been made since Spacecraft Bus and Subsystem PDRs. This section will give a brief description of the spacecraft configuration by discussing each side of the vehicle and identifying recent changes that have been made.

2.1 Nadir Side (+Z)

The nadir side of the spacecraft provides mounting for the EOS-AM instrument set which includes CERES (2), MOPITT, MISR, ASTER (TIR, SWIR, VSR, VEL, CSP and MPS) and MODIS. Also mounted are the earth sensor heads and associated electronics, the DAS antenna, an S-Band omni antenna and an instument accommodation equipment panel. There are two types of instrument-to-primary structure interfaces: direct mount and plate mount. The former consists of a truss structure which interfaces to both the instrument and the primary structure nodes, while the latter consists of a panel which holds the instrument and interfaces to the primary structure nodes. The plate mounted instruments include CERES and ASTER VSR. All other instruments are direct mounted. Kinematic mounts are used on all instrument/structure interfaces to minimize load sharing and distortion. There are no spacecraft bus deployables on the nadir side of the spacecraft, however, the instruments themselves do have deployable components such as cooler doors, lens covers, etc.

Significant design changes to the nadir side of the spacecraft since the Spacecraft Bus and Subsystem PDRs include:

1. Reconfiguration of the MOPITT instrument from a 4-point plate mount to a 3-point direct mount configuration.

2. Re-layout of the CERES-MOPITT-MISR instrument accommodation equipment on the bay-2 BDU panel for EMI/EMC reasons.
3. Movement of ASTER instrument accommodation equipment from the bay-2 BDU panel to the -Z side of the VSR plate to reduce harness length and EMI.
4. Placement of MODIS instrument accommodation equipment on a zenith mounted panel in bay-6.
5. Movement of the ESE's from the Power EM to the CERES plate for reduction of wire harness length to earth sensor heads.

2.2 Zenith Side (-Z)

The zenith side of the spacecraft provides mounting for the housekeeping Equipment Modules (EMs), Solar Array Drive (SAD), MODIS instrument accommodation equipment, High Gain Antenna (HGA) deployment system and an S-Band omni antenna. The EMs accommodated include Power, Recorder, GN&C Sensor and COMM/C&DH. These are box structures that interface to the structure node fittings with kinematic mounts. The SAD is supported by a monocoque structure which attaches to a plate that interfaces to the primary structure nodes. The HGA deployment system also attaches to this interface plate. The HGA is the only zenith mounted deployable. Areas on the zenith side that are unusable due to the HGA boom are covered with closeout panels that consist of a thermal blanket supported by a lightweight support panel. The closeout panel function is to maintain structure temperature.

Significant changes to the zenith side of the spacecraft since Spacecraft Bus and Subsystem PDRs include:

1. Accommodation of the Fine Sun Sensor (FSS) on the -Y side of the Power EM.
2. Refinement of the SAD and its support structure.
3. Addition of closeout panels to Bay-3 and Bay-4.
4. Movement of the magnetic torque rod on the Power EM closer to the -Z panel to reduce random vibration environment and magnetic interference with other torque rods.
5. Modification of the HGA to reflect design maturity.

2.3 +Y Side

The +Y side of the spacecraft offers the greatest heat rejection capability. It provides mounting for the Hex Bay Battery panel, DAS panel and radiator panels for the ASTER TIR, ASTER SWIR and MOPITT instruments. The radiator panels are connected via a tubing network to coldplates which attach to the respective instruments. Together, they form the Capillary Pumped Heat Transport System (CPHTS) which is an ammonia based two-phase heat transfer mechanism. There are no deployables or significant design changes since Spacecraft Bus and Subsystem PDRs on this side of the spacecraft.

2.4 -Y Side

The -Y face of the spacecraft provides mounting for the stowed solar array, RWA EM and the magnetic torque rod panel. The solar array blanket box attaches to the primary structure at 5 node fittings while the cannister attaches to the SAD support structure at 2 points and the SAD itself at 1 point. Separation devices are used at all interfaces except the SAD.

The RWA EM and the torque rod panel interface to node fittings with kinematic mounts. Unusable areas on this side of the spacecraft are covered with closeout panels similar to those described earlier. The solar array is the only deployable on the -Y side.

Significant changes to this side of the spacecraft since Spacecraft Bus and Subsystem PDRs include:

1. Elimination of 1 RWA EM due to the consolidation of 4 RWAs into one module.
2. Identification of TRW as the solar array contractor.
3. Downsize of the solar array to support the change to a 2.53 KW power system.
4. Incorporation of torque rod and closeout panels.

2.5 +X Side

This side of the spacecraft is used to mount the stowed HGA. The HGA mounts to the forward bulkhead (bulkhead-7) which is a honeycomb sandwich panel. Separation devices are used at each of 5 points of attachment between the panel and the HGA. Significant changes to the +X side since Spacecraft Bus and Subsystem PDRs include:

1. Addition of a fifth HGA attach point between bulkhead-7 and the boom.
2. Identification of Shape Memory Metal (SMM) based separation devices as the preferred type of HGA release mechanism.

2.6 -X Side

The -X face holds the fittings which interface the spacecraft to the launch vehicle. It also provides mounting for the spacecraft Propulsion Module which fits inside of the hex bay and attaches to the six node fittings at the separation plane. A honeycomb sandwich panel on the end of the Propulsion Module provides closeout for the -X side and also provides mounting for the propulsion engines and electrical support equipment. There are no deployables on this side of the spacecraft.

Significant changes to the -X side since Spacecraft Bus and Subsystem PDRs include:

1. Identification of the Propulsion Module as a Martin Marietta 'make' item.
2. Change from a Propulsion Module constructed entirely of panels to a panel/strut/ring configuration.

3. Change from a multi-tank to a single tank propellant system.
4. Change from a lug/clevis to a bolted interface between the Propulsion Module and the primary structure.
5. Movement of the Propulsion Module EPCs from the inside surface of the aft panel to the outside surface.
6. Movement of the Propulsion Module BDU and PMEA from the outside surface of the aft panel to the inside surface.

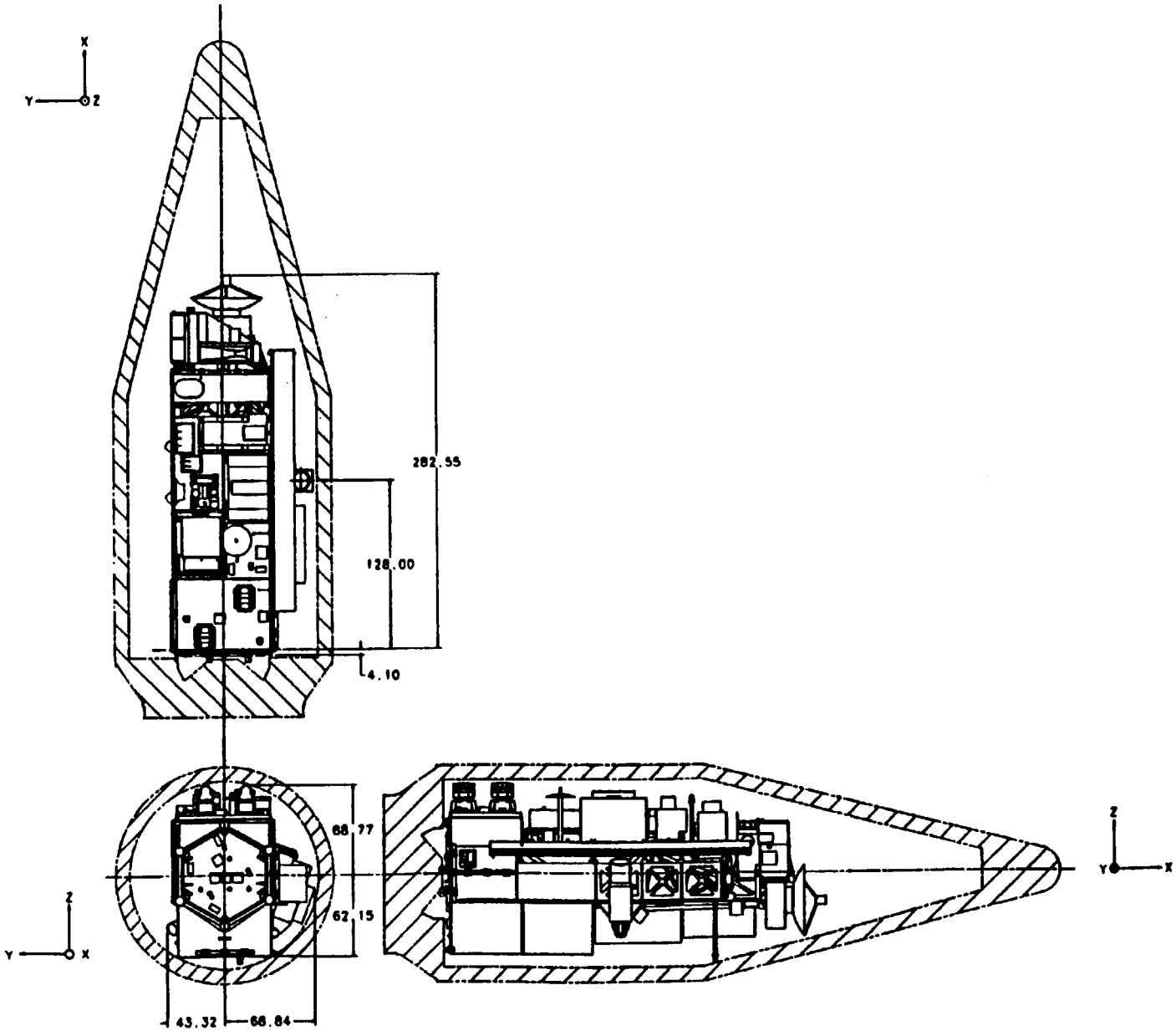

Figure 1 - Spacecraft in Launch Vehicle Fairing

DCC030993

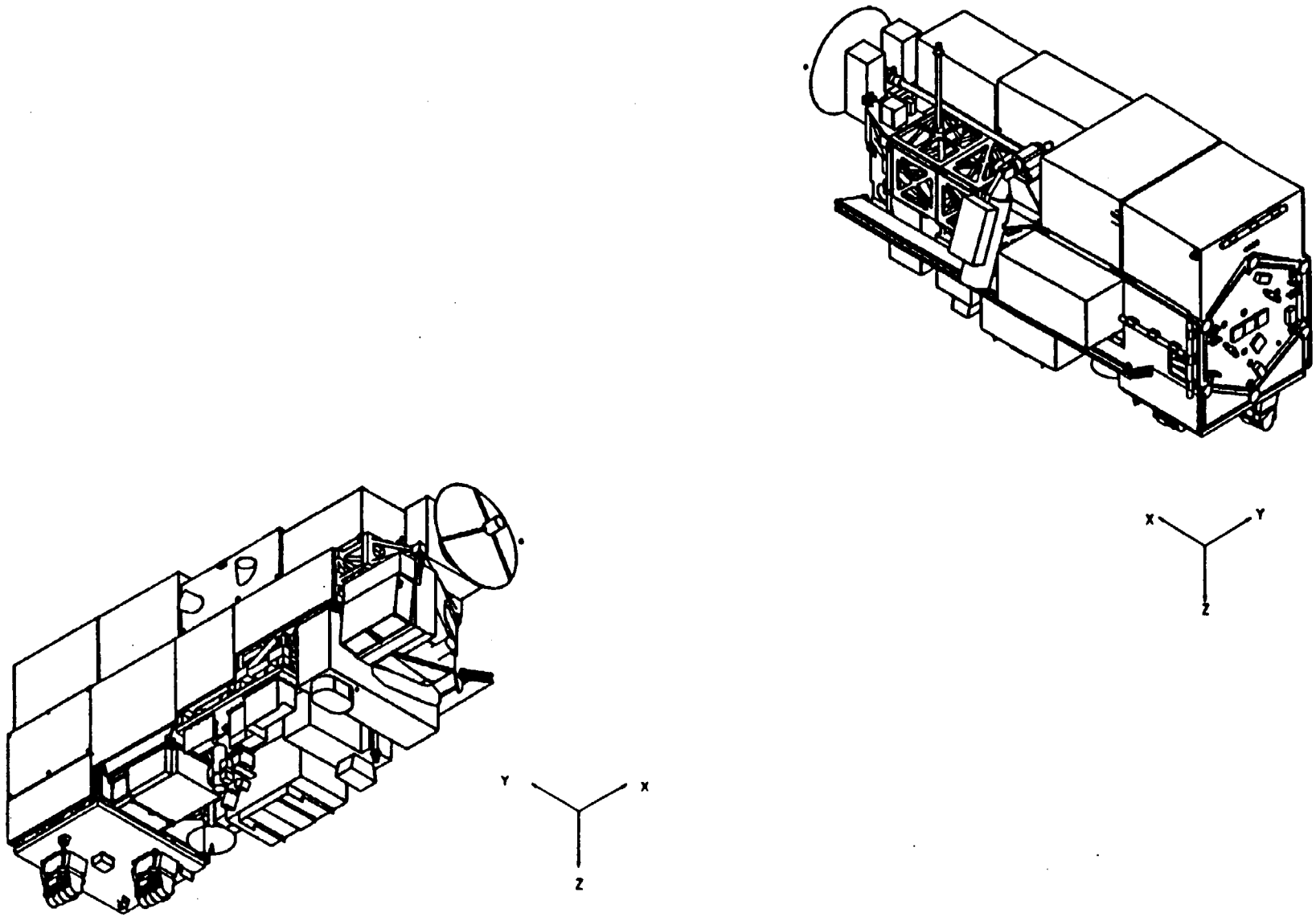

Figure 2 – Spacecraft Stowed Configuration

DCC030993

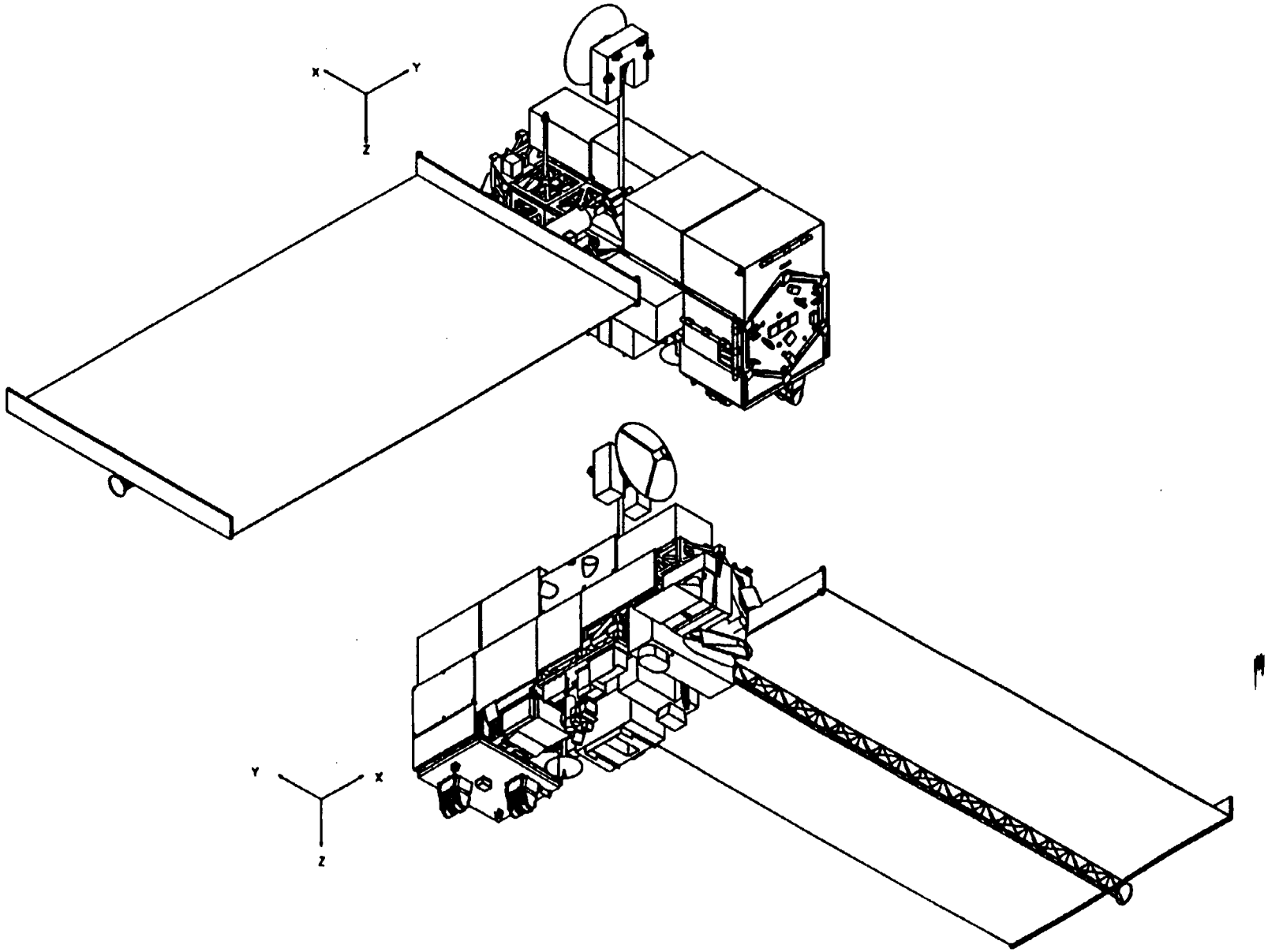

Figure 3 - Spacecraft Deployed Configuration

DCC030993

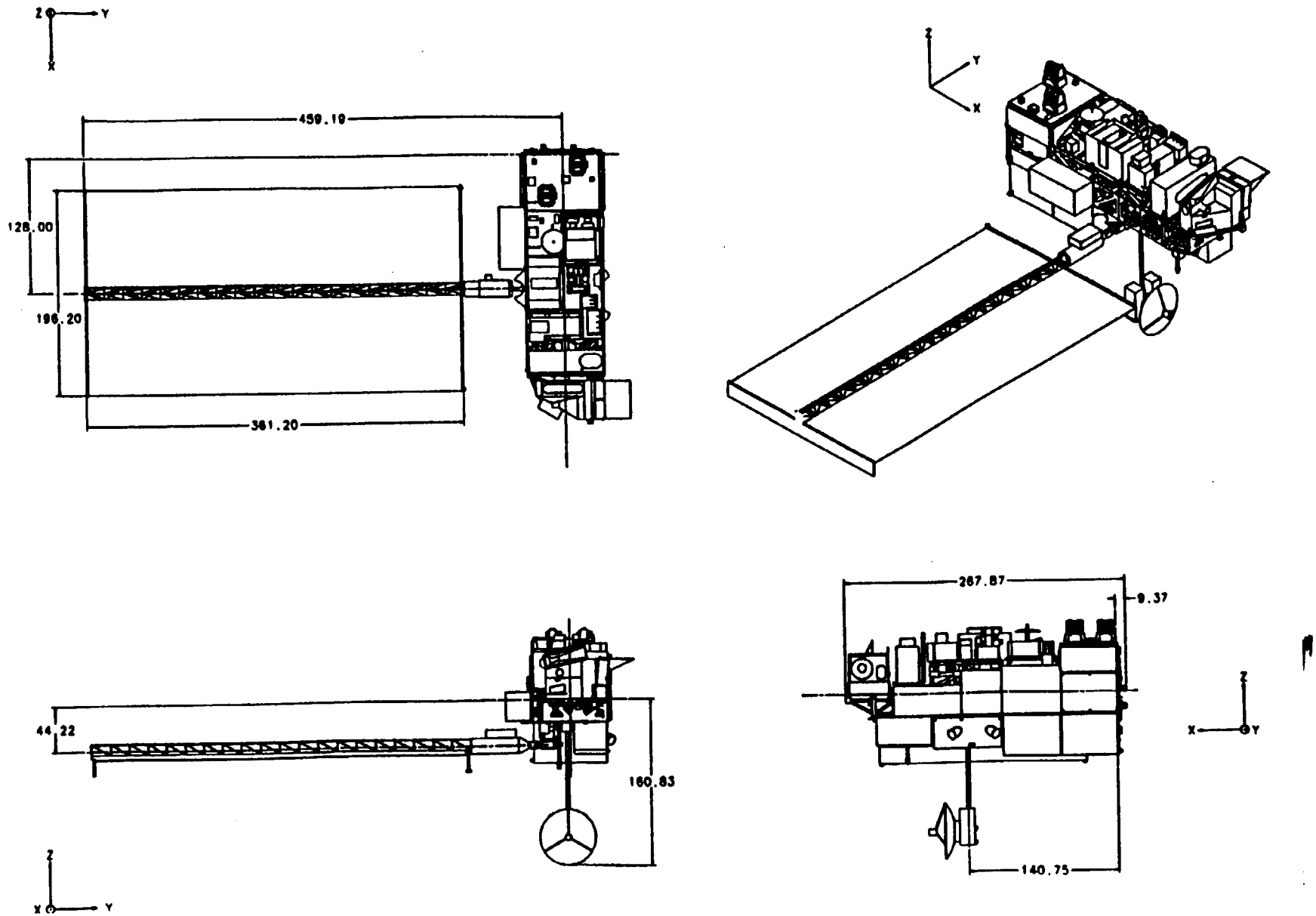

Figure 4 - Overall Dimensions of Deployed Spacecraft

DCC030993

EOS–AM Spacecraft Primary Structure Layouts (EOS–DN–CNF–019)

MARTIN MARIETTA
ASTRO SPACE

EOS-DN-CNF-019

DESIGN NOTE

TITLE: EOS-AM Spacecraft Primary Structure Layouts

AUTHOR: M. DiNardo, S. Raymus

AUTHOR'S MANAGER: C. Faust DATE 7/7/93

SE&I MANAGER: S. Carey for S. Carey DATE 7/8/93

CHIEF ENGINEER: D. Longcoy DATE 7/7/93

REVISIONS

LETTER	DESCRIPTION	DATE	AUTHOR
-	Initial release	6/18/93	M. DiNardo

EOS Form
006-01/01/93

DCC030993

MARTIN MARIETTA
ASTRO SPACE

DESIGN NOTE SUMMARY

DN#: EOS-DN-019 **Revision:** - **Date:** June 18, 1993

Title: EOS-AM Spacecraft Primary Structure Layouts

Author: M. DiNardo, S. Raymus **Source ID (ESTA, PD, Memo, etc.):**

Purpose/Questions Answered:

To present the EOS-AM spacecraft primary structure baseline for the Spacecraft PDR.
Also to briefly describe the changes to the baseline since Spacecraft Bus and Subsystem PDRs.

Summary/Answers:

Recommendations: (Be Specific)	Accepted	Rejected	Baselined	Date

Open Items/Action Required	Responsible Person	Due Date

Comments

Form Completed By S D Raymus **Date** 7/7/93 **Page** ___ **of** DCC030993

1 INTRODUCTION

The purpose of this design note is to present the primary structure layouts of the EOS-AM spacecraft and to give an overview of significant features and recent design modifications.

2 PRIMARY STRUCTURE DESCRIPTION

The primary structure of the EOS-AM spacecraft is a truss type design composed of UHMS/7714A graphite/epoxy (Gr/Ep) tubes bonded to machined titanium node fittings. This construction was chosen because it provides a high strength, high stiffness, lightweight structure for launch and a stable, distortion free platform for the earth observing instruments on-orbit.

The structure is sized for launch on either a General Dynamics Atlas IIAS (with 36" fairing stretch) or a Martin Marietta Titan IV vehicle. The load set used in the design had inputs from both vehicles, however, the overall size and configuration was dictated by the smaller Atlas IIAS fairing. The higher Titan IV loads drive the design of the joints and metallic fittings.

2.1 Structure Configuration

The primary structure is divided into 6 bays with the limits of each bay being defined by a bulkhead assembly (see Figures 1 and 2). The spacing of the nodes in each bay was determined by the mounting footprint of the equipment (instruments and equipment modules) to be installed. The aft bay (-X) is hexagonal in shape to provide a transition from the rectangular part of the truss to the circular launch vehicle interface. It also provides a volume which can accommodate the propulsion module.

The truss type structure offers great design flexibility in the location of hard-points for equipment mounting. This is illustrated in the design of bays 5 and 6 (see Figure 1). When the spacecraft is installed in the launch vehicle, these bays are located in the conical section of the fairing and thus must have different Z-dimensions in order to provide envelope clearance for the instruments mounted there (ASTER-TIR in bay 5 and MODIS in bay 6).

In order to simplify the design and assembly of the structure and to decrease its sensitivity to instrument field of view (FOV) requirements, extensive use of secondary trusses for instrument mounting was adopted. These secondary structures fasten to primary truss node fittings on one side and attach to the instrument interface on the other. The location of each instrument mounting plane can then be custom tailored to the FOV requirements by varying the secondary truss height and leaving the primary structure unaffected.

Significant design changes to the spacecraft primary structure configuration since the Spacecraft Bus and Subsystem PDRs include:

1. Addition of diagonals to Bay 5
2. Modifications to strut sizes in Bays 5 and 6
3. Use of a sandwich panel design for bulkhead 7

2.2 Structure Interfaces

Equipment interfaces to the primary structure are detailed in Figure 3. Because of the high pointing accuracy requirement, all equipment is kinematically mounted to the structure to prevent load sharing and thermal distortion. There are 3 types of kinematic mounts: 1-axis, 2-axis and 3-axis (see Figures 4, 5 and 6). The number of axes refers to the number of directions of restraint. In all cases, the kinematic mounts attach to the node fittings via a titanium alignment plate (see Figure 7). This plate allows match drilling of the kinematic mount interface at assembly without risk to the node fitting. The interface of the alignment plate to the node fitting is standardized as much as possible to simplify machining. A shear boss is used at all alignment plate interfaces and at the interfaces for the 2-axis and 3-axis kinematic mounts.

The kinematic mount load points were placed as close to the node centerlines as possible to prevent moments. However, small offsets were necessary in some cases due to the proximity of adjacent kinematic mounts. This close spacing was dictated by fairing volume constraints. The kinematic mount bolt/shear boss patterns are illustrated in Figure 3.

The primary structure accommodates the entire EOS-AM instrument set on the NADIR (+Z) side. This set includes CERES (2), MOPITT, MISR, ASTER (TIR, SWIR and VSR, MPS, CSP, VEL) and MODIS. The housekeeping Equipment Modules (EMs) are located primarily on the ZENITH (-Z) side (the RWA, DAS and Battery EMs are located on the -Y, +Y and +Y sides respectively) . Other significant interfaces include the instrument radiators on the +Y side, the stowed solar array on the -Y side, the stowed HGA on the +X side and the propulsion module on the -X side. All equipment was located so as to satisfy FOV, fairing clearance, cooling and harness length requirements.

Significant changes to the structure interfaces since Spacecraft Bus and Subsystem PDRs include:

1. Elimination of 1 RWA EM.
2. Deletion of the WBDCS instrument.
3. Addition of a bearing biasing spring to the kinematic mount assemblies to counteract the effects of wear.
4. Movement of MODIS interfaces due to instrument design change.
5. Extension of nodes on bulkheads 3 and 4 to accommodate MISR design change.
6. Additional interfaces for MAGE attachments.
7. Addition of HGA boom attachment on bulkhead 7

2.3 Structure Details

As mentioned earlier, the primary structure is composed of composite tubes and machined titanium node fittings. The tubes are fabricated using a process developed by Martin Marietta and first used on a large scale on the Upper Atmosphere Research Satellite (UARS) program. The primary challenges in fabricating these tubes include attainment of adequate strength properties and consistent dimensions.

The titanium node fittings are very complex machined parts in that they provide the junction point for several tubes which enter at a variety of angles. Several examples are shown in Figures 8, 9, 10 and 11.

In order to save weight and to provide flexibility in the location of attachment points, bulkhead #7 is constructed of a honeycomb sandwich panel (see Figure 12). This is the only sandwich panel in the primary structure.

Significant changes to the primary structure details since Spacecraft Bus and Subsystem PDRs include:

1. Refinement of node fitting details
2. Establishment of propulsion module interface details
3. Refinement of launch vehicle interface accommodations

Detail design of the structure is currently in process. This document will be updated periodically to reflect refinement of the design.

DCC030993

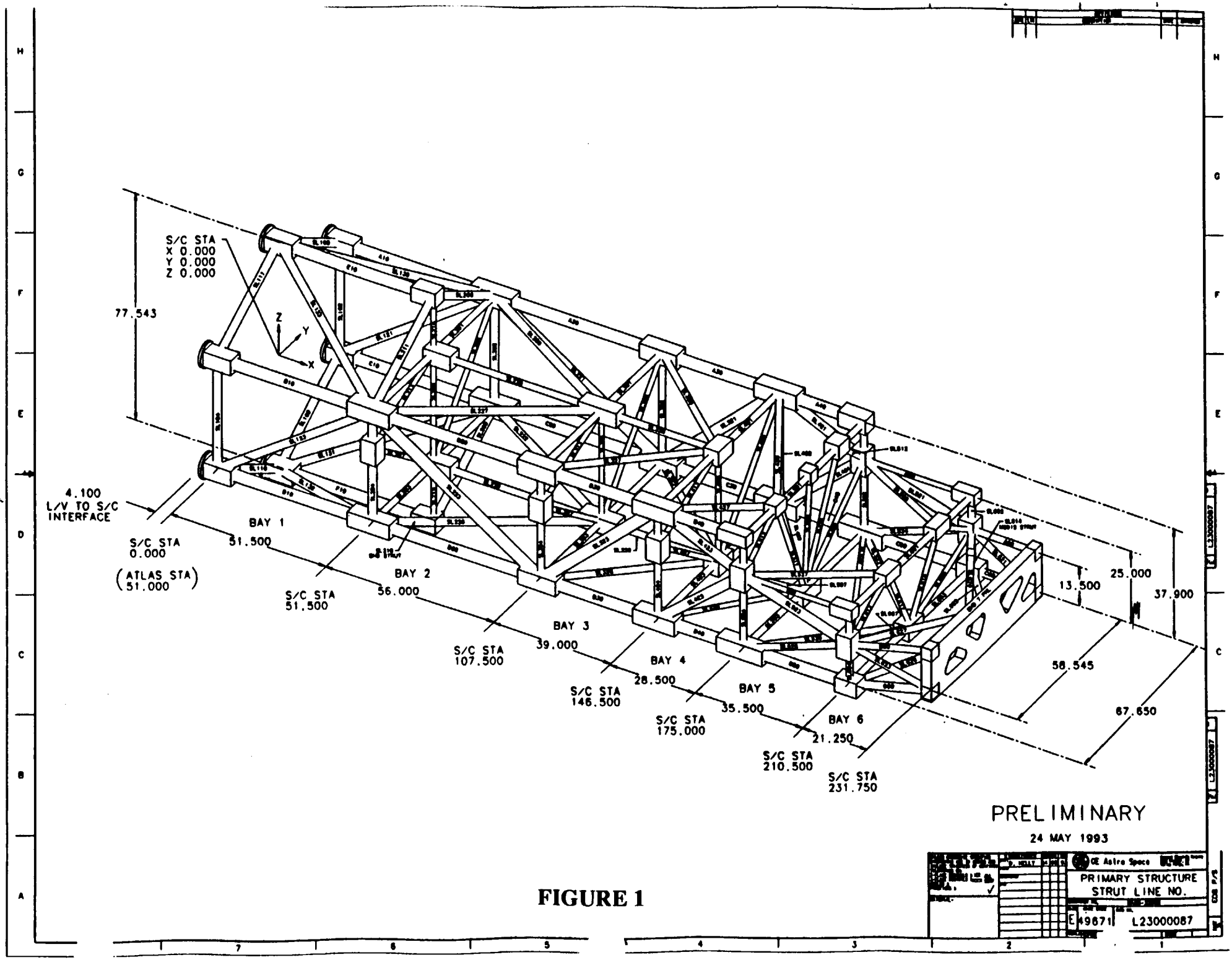
S/C STA
X 0.000
Y 0.000
Z 0.000
77.543
Z
Y
X
4.100
L/V TO S/C
INTERFACE
S/C STA
0.000
(ATLAS STA
51.000)
BAY 1
51.500
S/C STA
51.500
BAY 2
56.000
S/C STA
107.500
BAY 3
39.000
S/C STA
146.500
BAY 4
28.500
S/C STA
175.000
BAY 5
35.500
S/C STA
210.500
BAY 6
21.250
S/C STA
231.750
13.500
25.000
37.900
58.545
67.650
PRELIMINARY
24 MAY 1993
PRIMARY STRUCTURE
STRUT LINE NO.
49671
L23000087

FIGURE 1

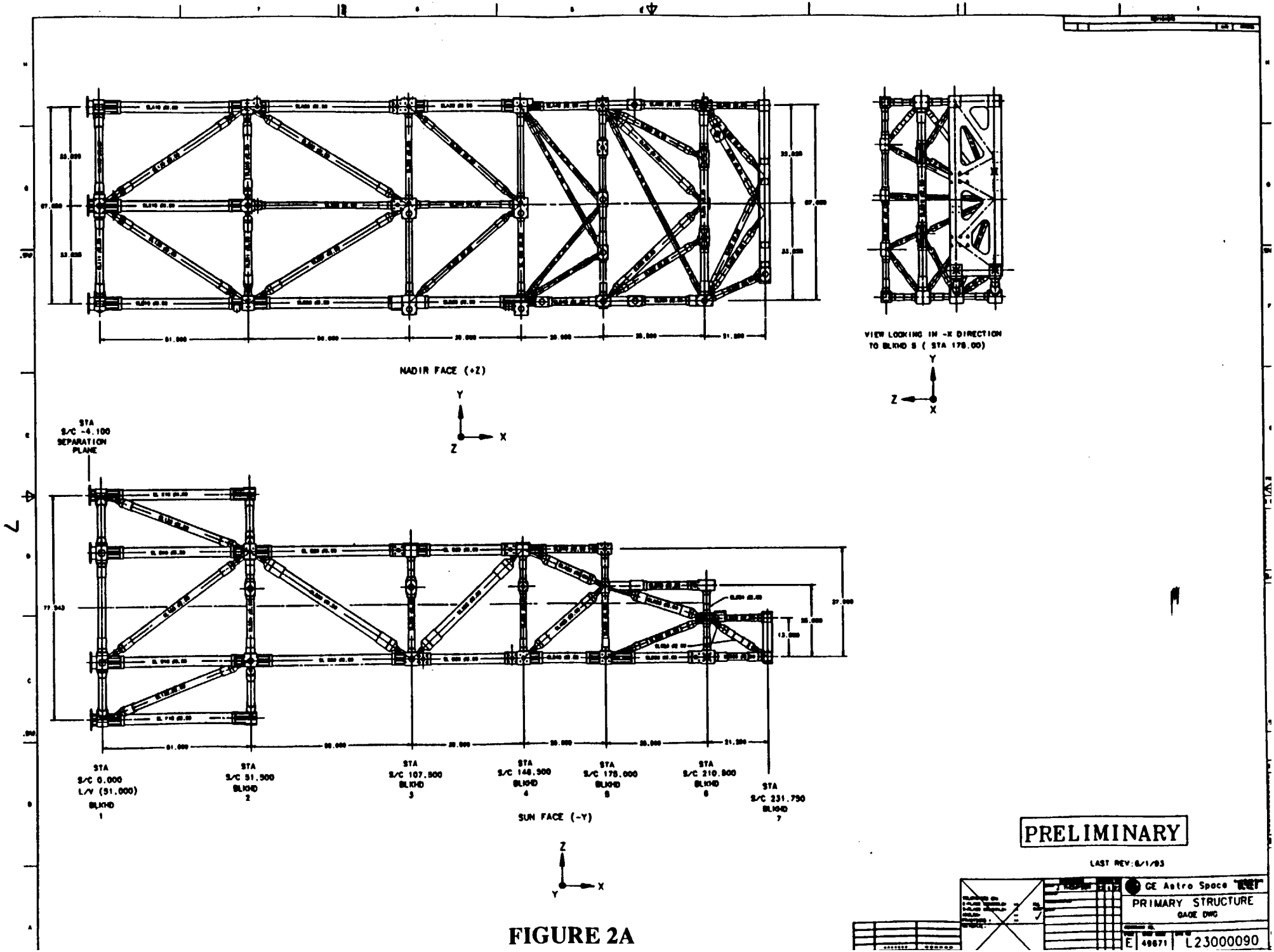
NADIR FACE (+Z)
VIEW LOOKING IN -X DIRECTION TO BLKHD 5 (STA 178.00)
STA S/C -4.100 SEPARATION PLANE
STA S/C 0.000 L/V (51.000) BLKHD 1
STA S/C 51.500 BLKHD 2
STA S/C 107.500 BLKHD 3
STA S/C 148.900 BLKHD 4
STA S/C 178.000 BLKHD 5
STA S/C 210.800 BLKHD 6
STA S/C 231.750 BLKHD 7
SUN FACE (-Y)
PRELIMINARY
LAST REV: 6/1/93
GE Astro Space
PRIMARY STRUCTURE
GAGE DWG
E 49671 L23000090

FIGURE 2A

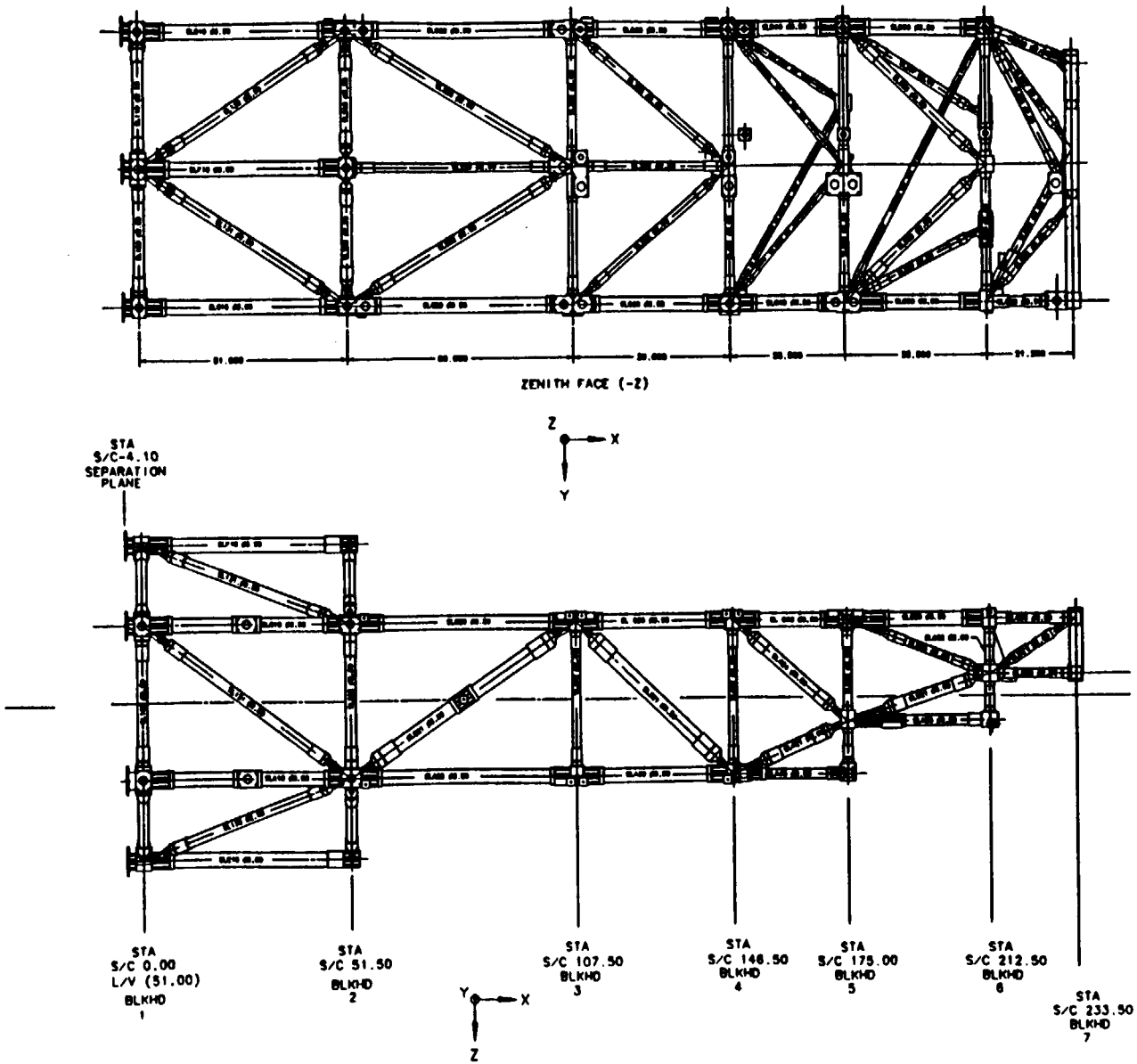

PRELIMINARY

LAST REV: 3/18/93

FIGURE 2B

E | 49871 | L23000090

SCALE | SHEET 2

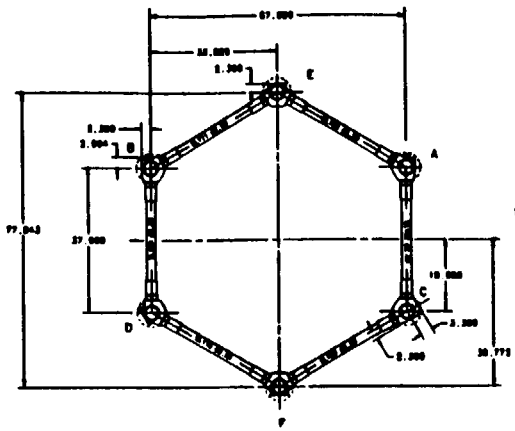

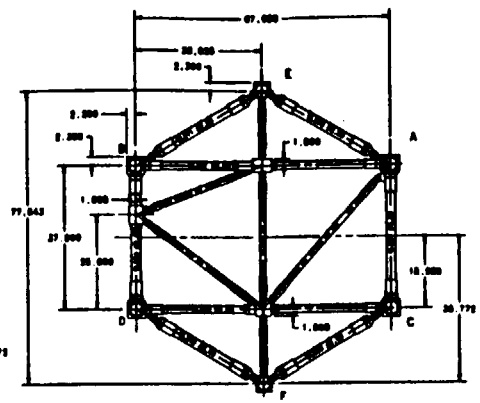

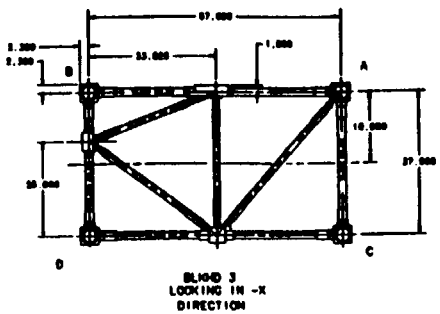

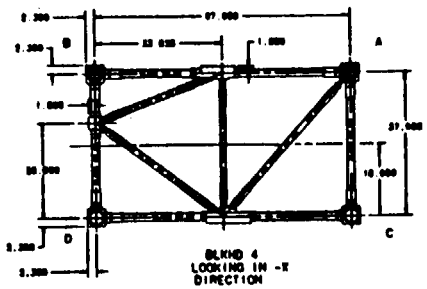

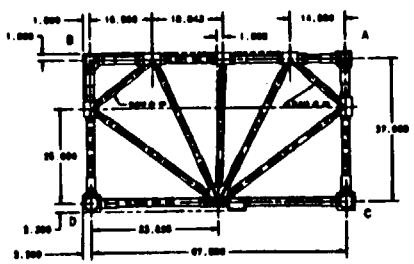

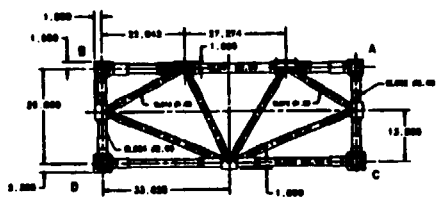

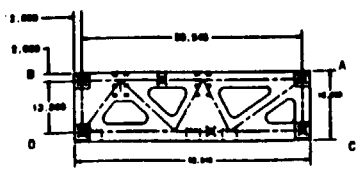

PRELIMINARY

LAST REV. 4/14/93

E 49671 L23000090

FIGURE 2C

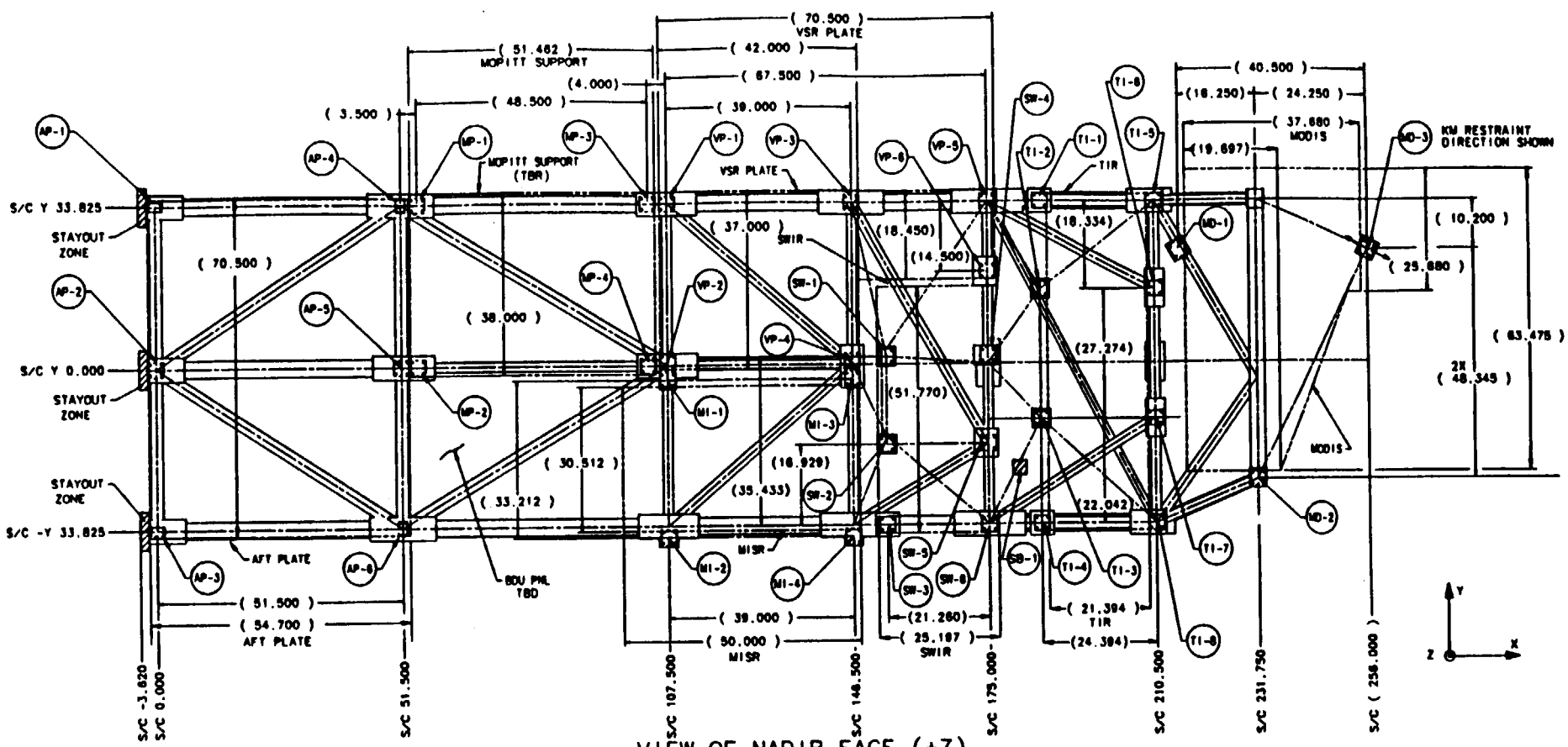

VIEW OF NADIR FACE (+Z)

INTERFACE POINT IDENTIFICATION: +Z FACE

LABEL	PURPOSE	KM RESTRAINT AXES	X	Y	Z	DETAIL
AP-1	AFT PLATE SUPPT	N/A	0.000	33.825	21.850	E
AP-2	AFT PLATE SUPPT	X,Y,Z (3-AXIS)	0.000	0.000	41.572	A
AP-3	AFT PLATE SUPPT	N/A	0.000	-33.825	21.850	E
AP-4	AFT PLATE SUPPT	N/A	51.500	33.825	21.250	E
AP-5	AFT PLATE SUPPT	Y,Z (2-AXIS)	51.500	0.000	41.572	B
AP-6	AFT PLATE SUPPT	N/A	51.500	-33.825	21.250	E
MP-1	MOPITT SUPPT (TBR)	N/A	55.000	33.825	21.750	M
MP-2	MOPITT SUPPT (TBR)	N/A	55.000	0.000	21.750	M
MP-3	MOPITT SUPPT (TBR)	N/A	103.500	33.825	21.750	M
MP-4	MOPITT SUPPT (TBR)	N/A	103.500	0.000	21.750	M
VP-1	VNIR/VSR PLATE	X,Y,Z (3 AXIS)	107.500	33.825	21.750	M
VP-2	VNIR/VSR PLATE	Z (1 AXIS)	107.500	0.720	21.750	M
VP-3	VNIR/VSR PLATE	Z (1 AXIS)	146.500	33.825	21.750	M
VP-4	VNIR/VSR PLATE	Z (1 AXIS)	146.500	0.720	21.750	M
VP-5	VNIR/VSR PLATE	Y,Z (2 AXIS)	175.000	33.825	21.750	M
VP-6	VNIR/VSR PLATE	Z (1 AXIS)	175.000	19.325	21.750	M
MI-1	MISR (DIRECT MOUNT)	Z (1 AXIS)	107.500	-3.009	21.750	A
MI-2	MISR (DIRECT MOUNT)	X,Y,Z (3 AXIS)	107.500	-36.221	21.750	A
MI-3	MISR (DIRECT MOUNT)	Z (1 AXIS)	146.500	-3.009	21.750	A
MI-4	MISR (DIRECT MOUNT)	Y,Z (2 AXIS)	146.500	-36.221	21.750	B

LABEL	PURPOSE	KM RESTRAINT AXES	X	Y	Z	DETAIL
SW-1	SWIR (DIRECT MOUNT)	Z (1 AXIS)	153.740	1.608	21.250	A
SW-2	SWIR (DIRECT MOUNT)	Y,Z (2 AXIS)	153.740	-16.896	21.250	B
SW-3	SWIR (DIRECT MOUNT)	Z (1 AXIS)	153.740	-33.825	21.250	A
SW-4	SWIR (DIRECT MOUNT)	Z (1 AXIS)	175.000	1.608	21.250	A
SW-5	SWIR (DIRECT MOUNT)	X,Y,Z (3 AXIS)	175.000	-16.896	21.250	A
SW-6	SWIR (DIRECT MOUNT)	Z (1 AXIS)	175.000	-33.825	21.250	A
TI-1	TIR (DIRECT MOUNT)	Z (1 AXIS)	186.106	33.825	8.350	A
TI-2	TIR (DIRECT MOUNT)	Z (1 AXIS)	186.106	15.491	8.350	A
TI-3	TIR (DIRECT MOUNT)	Z (1 AXIS)	186.106	-11.783	8.350	A
TI-4	TIR (DIRECT MOUNT)	Z (1 AXIS)	186.106	-33.825	8.350	A
TI-5	TIR (DIRECT MOUNT)	X,Z (2 AXIS)	210.500	33.825	8.350	B
TI-6	TIR (DIRECT MOUNT)	Y,Z (2 AXIS)	210.500	15.491	8.350	B
TI-7	TIR (DIRECT MOUNT)	Z (1 AXIS)	210.500	-11.783	8.350	A
TI-8	TIR (DIRECT MOUNT)	X,Z (2 AXIS)	210.500	-33.825	8.350	B
MD-1	MODIS (DIRECT MOUNT)	Z (1 AXIS)	215.500	23.625	-2.950	A
MD-2	MODIS (DIRECT MOUNT)	X,Y,Z (3 AXIS)	231.750	-24.720	-2.950	A
MD-3	MODIS (DIRECT MOUNT)	X/Y,Z (2 AXIS)	256.000	23.625	-2.950	B
SB-1	NADIR S-BAND MOUNT	N/A	TBD	TBD	TBD	N/A

THICKNESS OF ALIGNMENT PLATES IS ACCOUNTED FOR WHERE DETAIL A & B ARE USED

NOTES:
1. EQUIPMENT ON ±Y FACES NOT SHOWN FOR CLARITY
2. ONLY NEAREST STRUCTURE FACE IS SHOWN FOR CLARITY
3. SECONDARY STRUCTURE AND INTERFACE LOCATIONS FOR TIR, SWIR AND MODIS SHOWN (STRUTS SHOWN AS CENTER LINES)

FIGURE 3A

GE Astro Space

PAY LOAD INTFC PRIMARY STRUCTURE

E 49671 L23000091

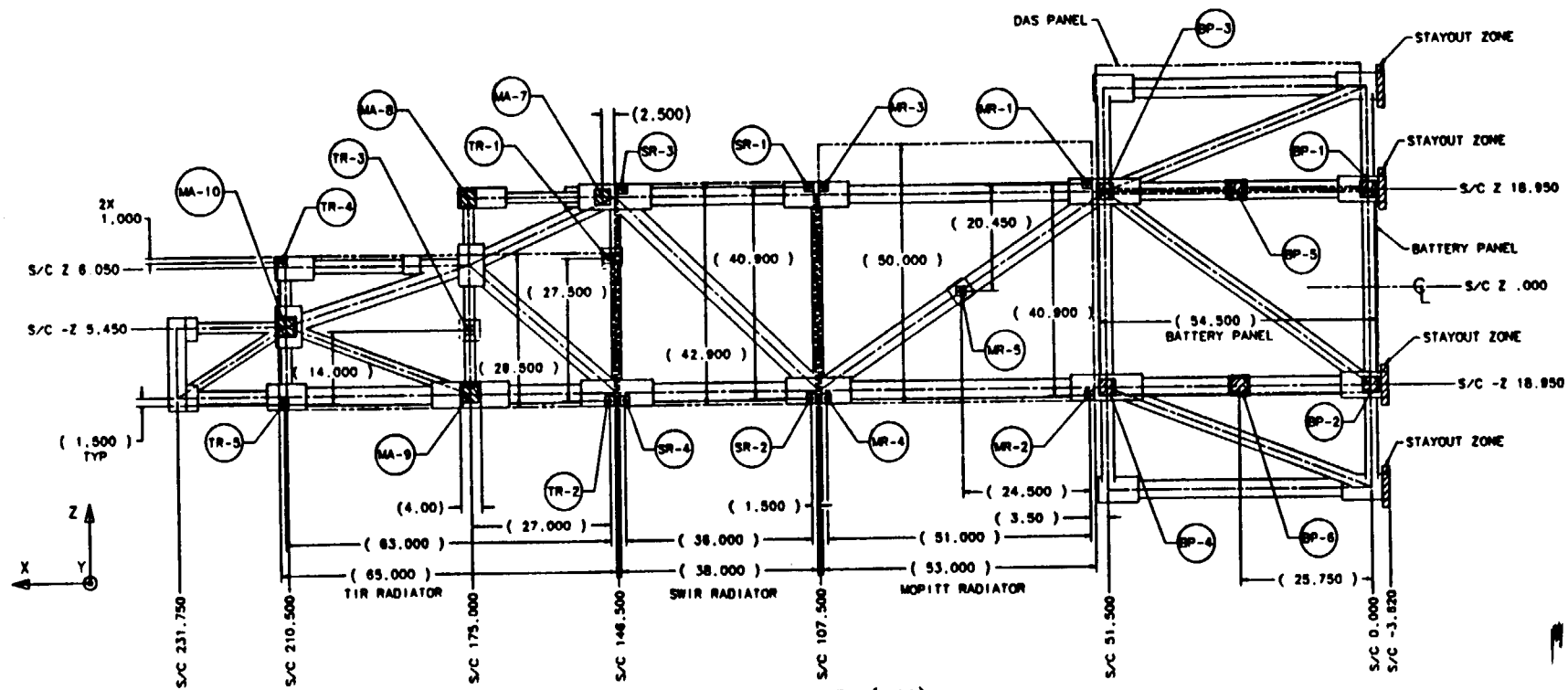

VIEW OF SPACE FACE (+Y)

INTERFACE POINT IDENTIFICATION: +Y FACE

LABEL	PURPOSE	KM RESTRAINT AXES	X	Y	Z	DETAIL
MA-7	MAGE LIFT POINT	N/A	148.000	36.406	18.950	L
MA-8	MAGE LIFT POINT	N/A	175.000	36.406	18.950	L
MA-9	MAGE SPRT POINT	N/A	175.000	36.406	-18.950	L
MA-10	MAGE LIFT POINT	N/A	210.500	36.406	-6.450	L
BP-1	BATTERY & DAS PANELS	X,Y,Z (3 AXIS)	0.000	36.625	18.950	A
BP-2	BATTERY & DAS PANELS	Y (1 AXIS)	0.000	36.625	-18.950	A
BP-3	BATTERY & DAS PANELS	Y,Z (2 AXIS)	51.500	36.625	18.950	B
BP-4	BATTERY & DAS PANELS	Y (1 AXIS)	51.500	36.625	-18.950	A
BP-5	BATTERY PANEL	Y (1 AXIS)	25.750	36.625	18.950	A
BP-6	BATTERY PANEL	Y (1 AXIS)	25.750	36.625	-18.950	A
MR-1	MOPITT RADIATOR SPRT	X,Y,Z (3 AXIS DST)	55.000	36.425	20.450	D
MR-2	MOPITT RADIATOR SPRT	Y (1 AXIS DST)	55.000	36.425	-20.450	D
MR-3	MOPITT RADIATOR SPRT	Y,Z (2 AXIS DST)	106.000	36.425	20.450	D
MR-4	MOPITT RADIATOR SPRT	Y (1 AXIS DST)	106.000	36.425	-20.450	D
MR-5	MOPITT RADIATOR SPRT	Y (1 AXIS DST)	79.500	36.425	0.000	D

LABEL	PURPOSE	KM RESTRAINT AXES	X	Y	Z	DETAIL
SR-1	SWIR RADIATOR SUPPORT	X,Y,Z (3 AXIS DST)	109.000	36.425	20.450	D
SR-2	SWIR RADIATOR SUPPORT	Y (1 AXIS DST)	109.000	36.425	-20.450	D
SR-3	SWIR RADIATOR SUPPORT	Y,Z (2 AXIS DST)	145.000	36.425	20.450	D
SR-4	SWIR RADIATOR SUPPORT	Y (1 AXIS DST)	145.000	36.425	-20.450	D
TR-1	TIR RADIATOR SUPPORT	Y (1 AXIS DST)	148.000	36.425	7.050	D
TR-2	TIR RADIATOR SUPPORT	X,Y,Z (3 AXIS DST)	148.000	36.425	-20.450	D
TR-3	TIR RADIATOR SUPPORT	Y (1 AXIS DST)	175.000	36.425	-6.450	D
TR-4	TIR RADIATOR SUPPORT	Y (1 AXIS DST)	211.000	36.425	7.050	D
TR-5	TIR RADIATOR SUPPORT	Y,Z (2 AXIS DST)	211.000	36.425	-20.450	D

ALL MAGE LIFT POINTS AND SUPPORT POINTS ARE TBD

NOTE:
1. EQUIPMENT ON ±Z FACES NOT SHOWN FOR CLARITY
2. ONLY NEAREST STRUCTURE FACE IS SHOWN FOR CLARITY
3. SECONDARY STRUCTURE FOR TIR, SWIR AND MODIS NOT SHOWN FOR CLARITY

FIGURE 3B

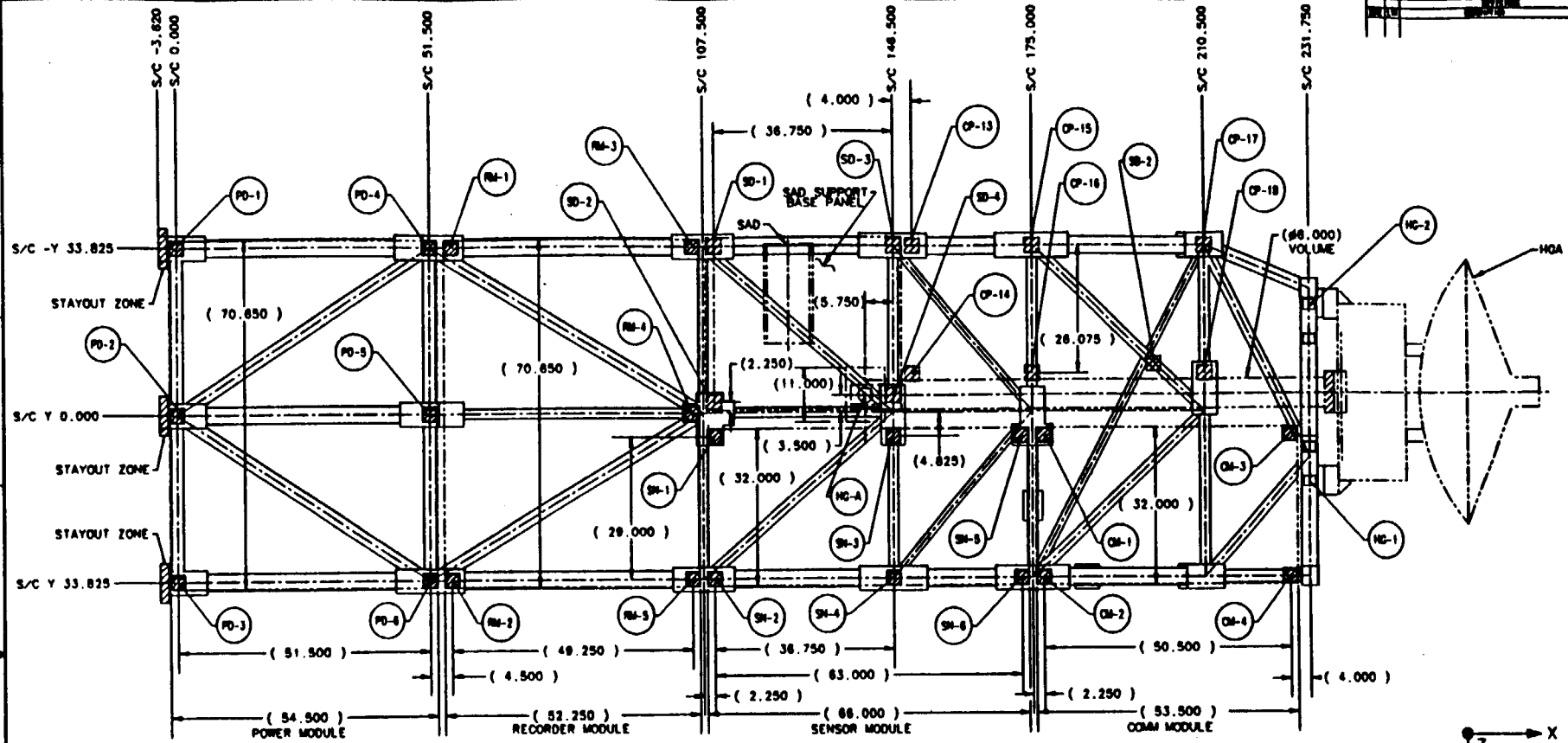

VIEW OF ZENITH FACE (-Z)

INTERFACE POINT IDENTIFICATION: -Z FACE

LABEL	PURPOSE	KM RESTRAINT AXES	X	Y	Z	DETAIL
PD-1	POWER MODULE SUPPORT	Z (1 AXIS)	0.000	-33.825	-22.760	A
PD-2	POWER MODULE SUPPORT	Z (1 AXIS)	0.000	0.000	-41.572	A
PD-3	POWER MODULE SUPPORT	X,Y,Z (3 AXIS)	0.000	33.825	-22.760	A
PD-4	POWER MODULE SUPPORT	Z (1 AXIS)	51.500	-33.825	-21.750	A
PD-5	POWER MODULE SUPPORT	Z (1 AXIS)	51.500	0.000	-41.572	A
PD-6	POWER MODULE SUPPORT	Y,Z (2 AXIS)	51.500	33.825	-21.750	B
RM-1	RECORDER MODULE	X,Z (2 AXIS)	56.000	-33.825	-21.750	B
RM-2	RECORDER MODULE	X,Y,Z (3 AXIS)	56.000	33.825	-21.750	A
RM-3	RECORDER MODULE	Z (1 AXIS)	105.250	-33.825	-21.750	A
RM-4	RECORDER MODULE	Z (1 AXIS)	105.250	0.000	-21.750	A
RM-5	RECORDER MODULE	Z (1 AXIS)	105.250	33.825	-21.750	A
SN-1	SENSOR MODULE SUPPORT	Z (1 AXIS)	109.750	4.825	-21.750	A
SN-2	SENSOR MODULE SUPPORT	X,Y,Z (3 AXIS)	109.750	33.825	-21.750	A
SN-3	SENSOR MODULE SUPPORT	Z (1 AXIS)	146.500	4.825	-21.750	A
SN-4	SENSOR MODULE SUPPORT	Z (1 AXIS)	146.500	33.825	-21.750	A
SN-5	SENSOR MODULE SUPPORT	Z (1 AXIS)	172.750	4.825	-21.750	A
SN-6	SENSOR MODULE SUPPORT	Y,Z (2 AXIS)	172.750	33.825	-21.750	B
SB-2	S-BAND ANTENNA ZENITH	N/A	TBD	TBD	TBD	N/A

LABEL	PURPOSE	KM RESTRAINT AXES	X	Y	Z	DETAIL
CM-1	COMM MODULE SUPPORT	Z (1 AXIS)	177.250	4.825	-21.750	A
CM-2	COMM MODULE SUPPORT	X,Y,Z (3 AXIS)	177.250	33.825	-21.750	A
CM-3	COMM MODULE SUPPORT	Z (1 AXIS)	227.750	4.825	-21.750	A
CM-4	COMM MODULE SUPPORT	Y,Z (2 AXIS)	227.750	33.825	-21.750	B
HG-A	HGA HINGE(SBC STRUCT)	N/A	140.750	-9.500	TBD	N/A
HG-1	HGA BOX RESTRAINT	N/A	231.750	14.500	-5.452	J
HG-2	HGA BOX RESTRAINT	N/A	231.750	-21.500	-5.452	J
SD-1	SAD SUPPORT PLATE	N/A	109.750	-33.825	-21.750	H
SD-2	SAD SUPPORT PLATE	N/A	109.750	-2.250	-21.750	H
SD-3	SAD SUPPORT PLATE	N/A	146.500	-33.825	-21.750	H
SD-4	SAD SUPPORT PLATE	N/A	146.500	-2.250	-21.750	H
CP-13	CLOSEOUT PANEL	TBD	150.500	-33.825	-21.750	F
CP-14	CLOSEOUT PANEL	TBD	150.500	-7.750	-21.750	F
CP-15	CLOSEOUT PANEL	TBD	175.000	-33.825	-21.750	F
CP-16	CLOSEOUT PANEL	TBD	175.000	-7.750	-21.750	F
CP-17	CLOSEOUT PANEL	TBD	210.500	-33.825	-21.750	F
CP-18	CLOSEOUT PANEL	TBD	210.500	-7.750	-21.750	F

NOTES:
1. EQUIPMENT ON ±Y FACES NOT SHOWN FOR CLARITY
2. ONLY NEAREST STRUCTURE FACE IS SHOWN FOR CLARITY
3. ASTER AND MODIS SECONDARY STRUCTURE ARE NOT SHOWN FOR CLARITY

FIGURE 3C

THICKNESS OF ALIGNMENT PLATES IS ACCOUNTED FOR WHERE DETAIL A & B ARE USED

E 49671 L23000091

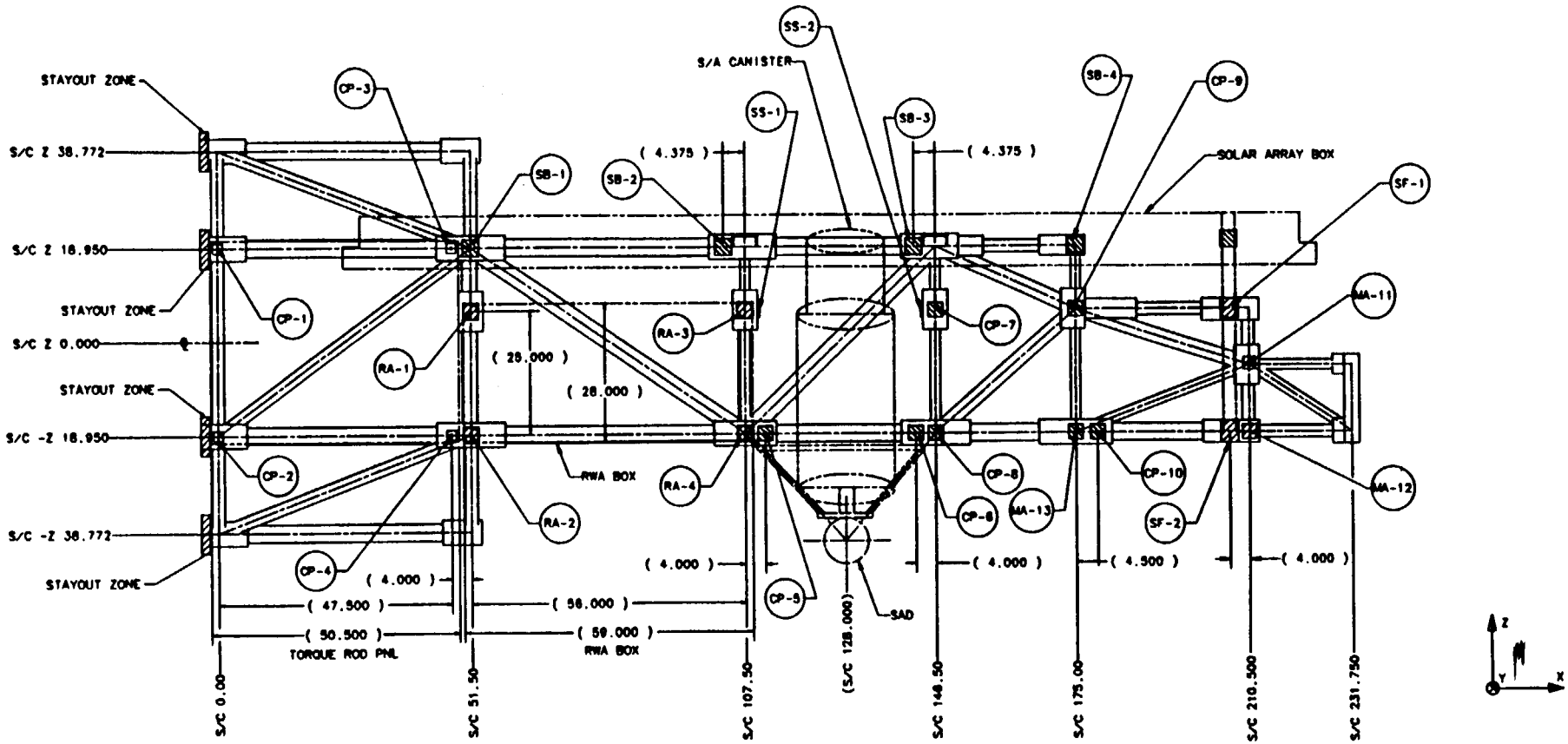

VIEW OF SUN FACE (-Y)

INTERFACE POINT IDENTIFICATION: -Y FACE

LABEL	PURPOSE	KM RESTRAINT AXES	X	Y	Z	DETAIL
MA-11	MAGE LIFT POINT	N/A	210.500	-30.405	-6.450	L
MA-12	MAGE LIFT POINT	N/A	210.500	-30.405	-18.950	L
MA-13	MAGE LIFT POINT	N/A	175.000	-30.405	-18.950	L
CP-1	TORQUE ROD PANEL	X,Y,Z (3 AXIS)	0.000	-36.625	18.950	D
CP-2	TORQUE ROD PANEL	Y (1 AXIS)	0.000	-36.625	-18.950	D
CP-3	TORQUE ROD PANEL	Y,Z (2 AXIS)	47.500	-36.625	18.950	D
CP-4	TORQUE ROD PANEL	Y (1 AXIS)	47.500	-36.625	-18.950	D
CP-5	CLOSEOUT PANEL	TBD	111.500	-36.625	-18.950	F
CP-6	CLOSEOUT PANEL	TBD	142.500	-36.625	-18.950	F
CP-7	CLOSEOUT PANEL	TBD	146.500	-36.625	6.050	F
CP-8	CLOSEOUT PANEL	TBD	146.500	-36.625	-18.950	F
CP-9	CLOSEOUT PANEL	TBD	175.000	-36.625	6.050	F
CP-10	CLOSEOUT PANEL	TBD	179.500	-36.625	-18.950	F

LABEL	PURPOSE	KM RESTRAINT AXES	X	Y	Z	DETAIL
RA-1	REACTION WHEEL ASSY	Y (1 AXIS)	51.500	36.625	6.050	A
RA-2	REACTION WHEEL ASSY	X,Y,Z (3 AXIS)	51.500	36.625	-18.950	A
RA-3	REACTION WHEEL ASSY	Y (1 AXIS)	107.500	36.625	6.050	A
RA-4	REACTION WHEEL ASSY	Y,Z (2 AXIS)	107.500	36.625	-18.950	B
SS-1	S/A CANISTER-AFT	N/A	100.500	-33.825	-4.060	TBD
SS-2	S/A CANISTER-FWD	N/A	144.500	-33.825	-4.060	TBD
SB-1	SOLAR ARRAY BOX BRKT	N/A	51.500	-36.325	18.950	F
SB-2	SOLAR ARRAY BOX BRKT	N/A	103.125	-36.325	18.950	F
SB-3	SOLAR ARRAY BOX BRKT	N/A	142.125	-36.325	18.950	F
SB-4	SOLAR ARRAY BOX BRKT	N/A	175.000	-36.325	18.950	F
SF-1	SOLAR ARRAY SUPPORT	N/A	206.500	-36.325	6.050	F
SF-2	SOLAR ARRAY SUPPORT	N/A	206.500	-36.325	-18.950	F

ALL MAGE LIFT POINTS ARE TBR IN ALL AXES
SOLAR ARRAY CSTR POINTS SS-1 & SS-2 ARE TBR IN THE X AXIS

NOTES:
1. EQUIPMENT ON ±Z FACES NOT SHOWN FOR CLARITY
2. ONLY NEAREST STRUCTURE FACE IS SHOWN FOR CLARITY
3. SECONDARY STRUCTURE NOT SHOWN FOR CLARITY

FIGURE 3D

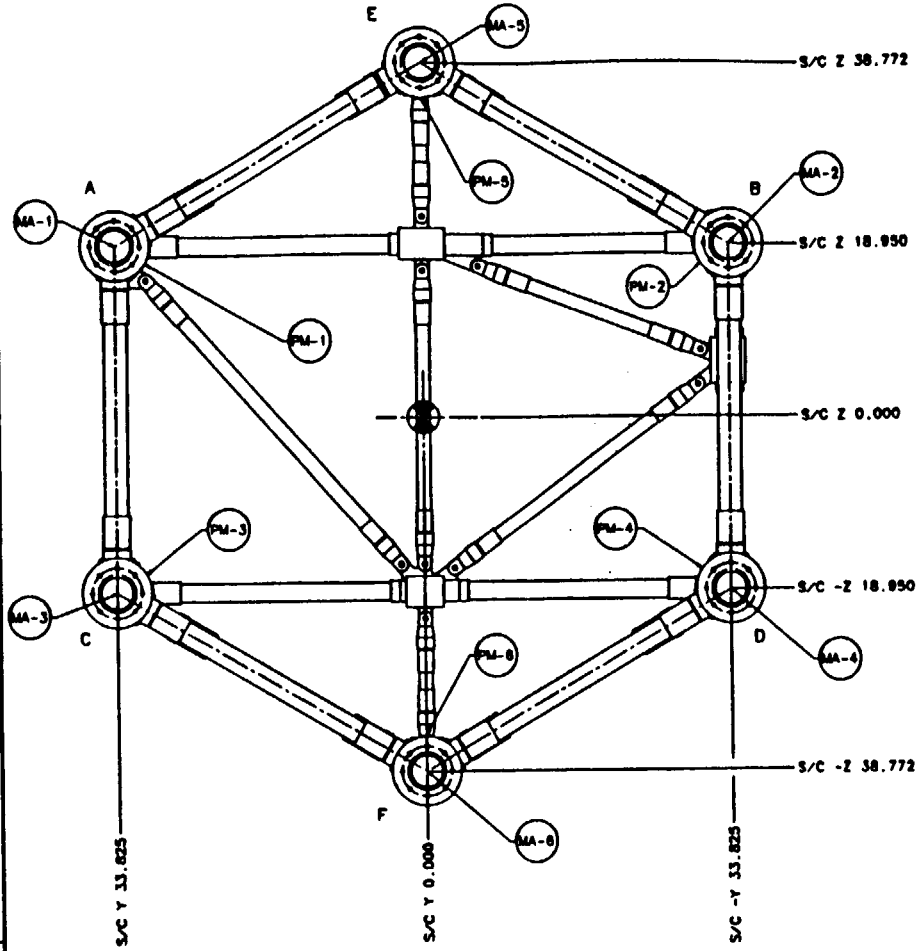

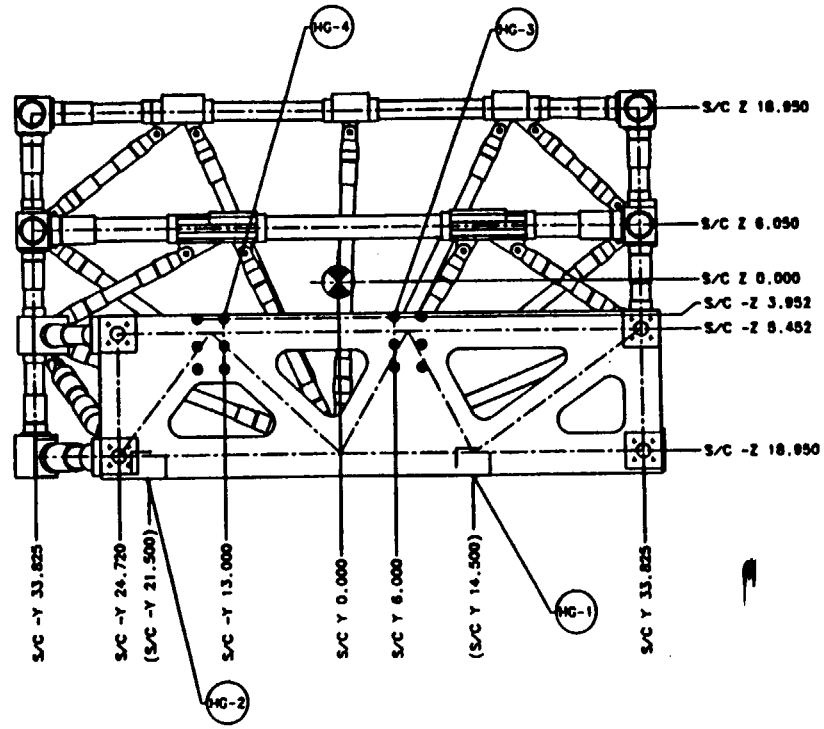

LABEL	PURPOSE	KM RESTRAINT AXES	X	Y	Z	DETAIL
MA-1	MAGE LIFT SUPPORT	N/A	-3.620	33.825	18.950	C
MA-2	MAGE LIFT SUPPORT	N/A	-3.620	-33.825	18.950	C
MA-3	MAGE LIFT SUPPORT	N/A	-3.620	33.825	-18.950	C
MA-4	MAGE LIFT SUPPORT	N/A	-3.620	-33.825	-18.950	C
MA-5	MAGE LIFT SUPPORT	N/A	-3.620	0.000	38.771	C
MA-6	MAGE LIFT SUPPORT	N/A	-3.620	0.000	-38.771	C
HG-1	HGA BOX RESTRAINT	N/A	MOUNTS ON -Z FACE SEE SHEET 3			
HG-2	HGA BOX RESTRAINT	N/A	MOUNTS ON -Z FACE SEE SHEET 3			
HG-3	HGA BOX RESTRAINT	N/A	233.375	6.000	-5.452	K
HG-4	HGA BOX RESTRAINT	N/A	233.375	-13.000	-5.452	K
PM-1	PROPULSION MODULE	N/A	0.000	30.667	17.181	N
PM-2	PROPULSION MODULE	N/A	0.000	-30.667	17.181	N
PM-3	PROPULSION MODULE	N/A	0.000	30.667	-17.181	N
PM-4	PROPULSION MODULE	N/A	0.000	-30.667	-17.181	N
PM-5	PROPULSION MODULE	N/A	0.000	0.000	35.152	N
PM-6	PROPULSION MODULE	N/A	0.000	0.000	-35.152	N

FIGURE 3E

E 49871 L23000091

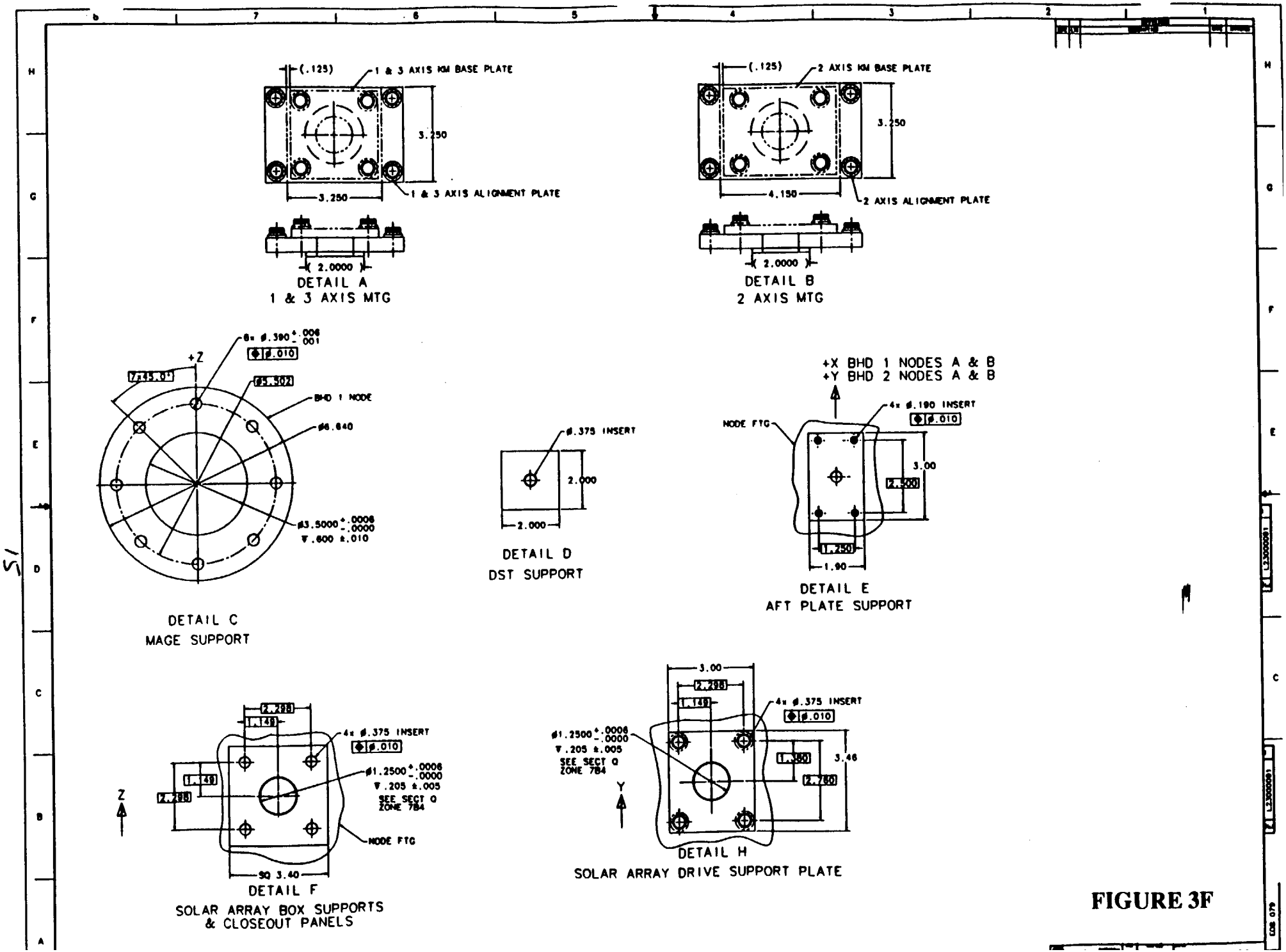
(.125)
1 & 3 AXIS KM BASE PLATE
3.250
3.250
1 & 3 AXIS ALIGNMENT PLATE
2.0000
DETAIL A
1 & 3 AXIS MTG
(.125)
2 AXIS KM BASE PLATE
3.250
4.150
2 AXIS ALIGNMENT PLATE
2.0000
DETAIL B
2 AXIS MTG
+Z
BHD 1 NODE
DETAIL C
MAGE SUPPORT
ø.375 INSERT
2.000
2.000
DETAIL D
DST SUPPORT
+X BHD 1 NODES A & B
+Y BHD 2 NODES A & B
4x ø.190 INSERT
NODE FTG
3.00
2.500
1.250
1.90
DETAIL E
AFT PLATE SUPPORT
4x ø.375 INSERT
NODE FTG
Z
SQ 3.40
DETAIL F
SOLAR ARRAY BOX SUPPORTS
& CLOSEOUT PANELS
3.00
4x ø.375 INSERT
3.46
Y
DETAIL H
SOLAR ARRAY DRIVE SUPPORT PLATE

FIGURE 3F

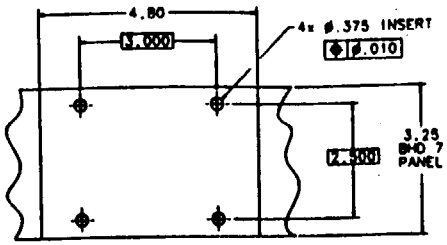

DETAIL J
HGA MOUNT

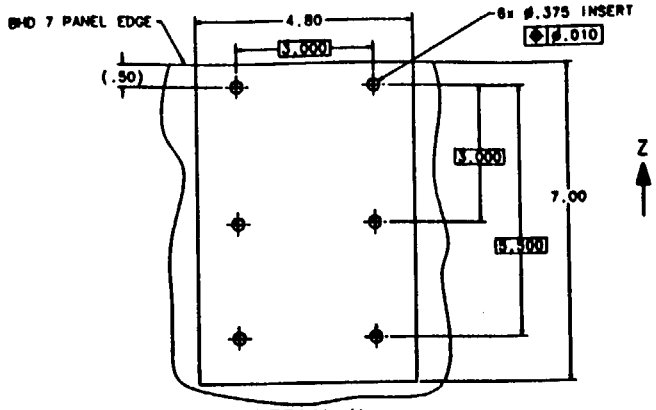

DETAIL K
HGA MOUNT

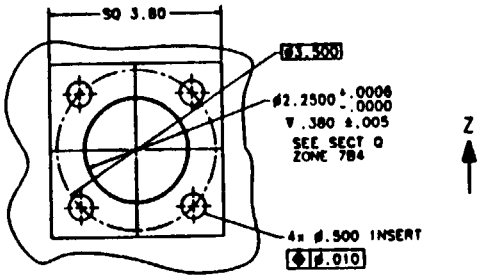

DETAIL L
MAGE MOUNT

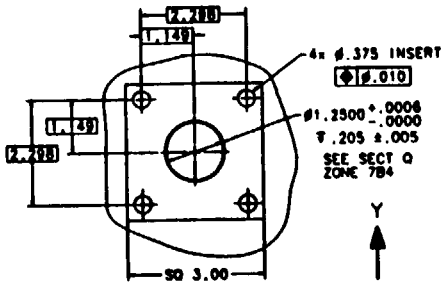

DETAIL M
MOPITT SUPPORT
& VNIR/VSR PLATE

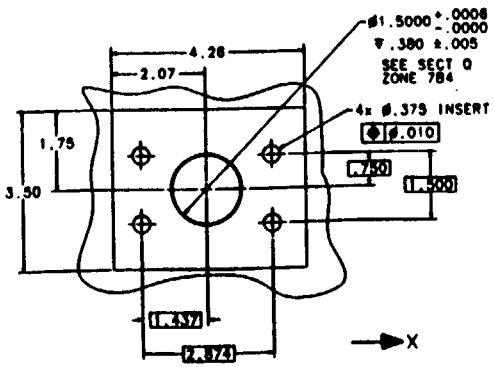

DETAIL N
PROPULSION MODULE

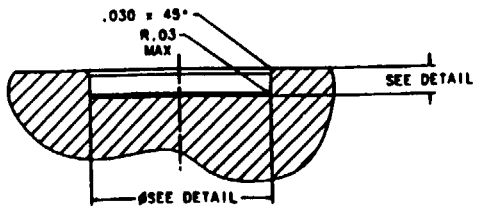

SECTION Q
SHEAR BOSS INTERFACE

FIGURE 3G

E 49671 L23000091

91

A	REVISED PER SECN 385	

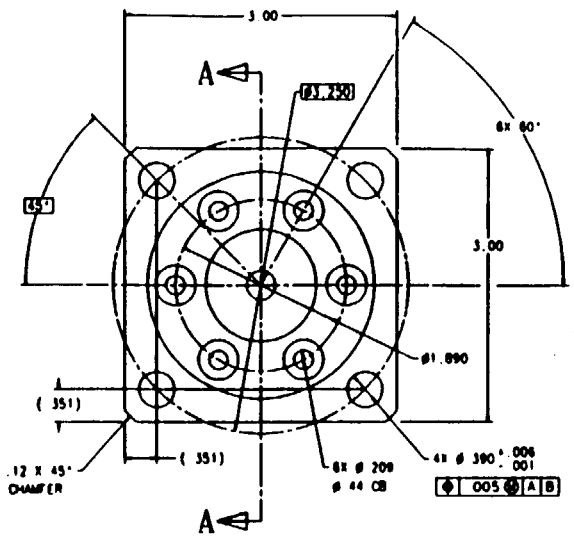

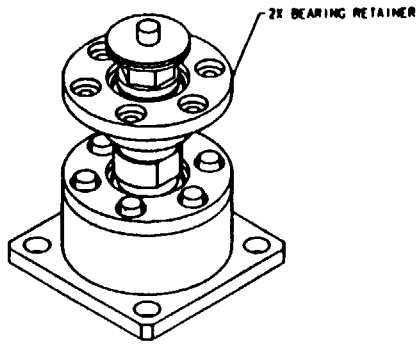

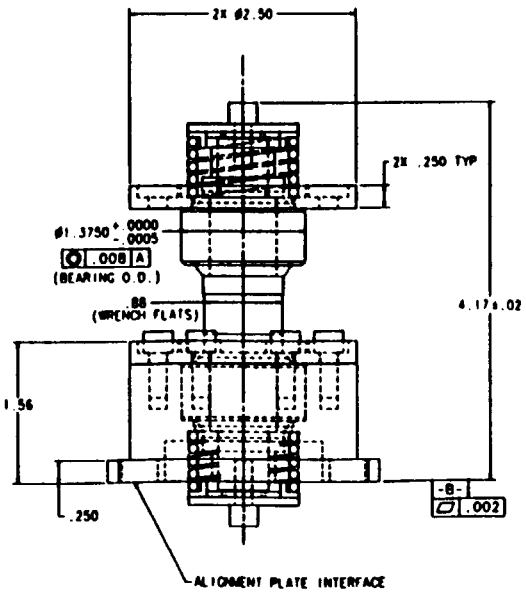

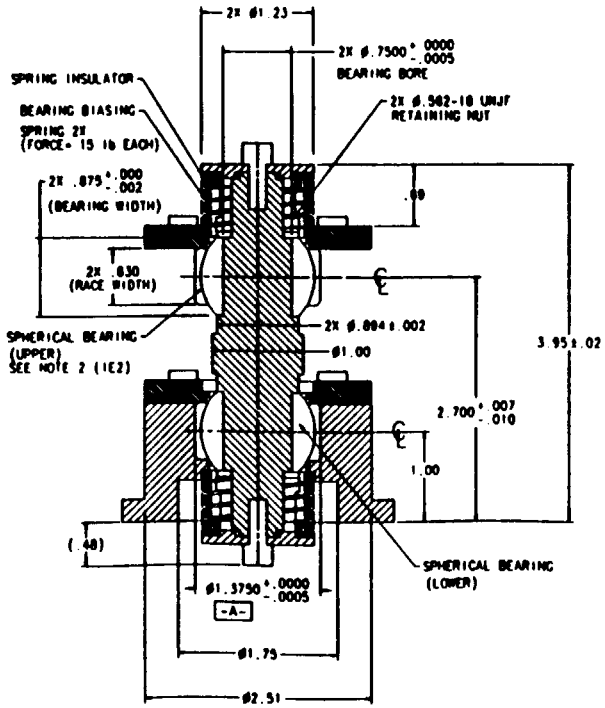

SECTION A-A

NOTES:

1. INTERPRETATION OF DRAWING TERMS AND TOLERANCES PER S30000.
2. BEARING RETAINED IN EQUIPMENT STRUCTURE. SEE MICD 20008983 FOR EQUIP. INTERFACE DETAILS.
3. BEARINGS STAKED IN PLACE.

1-AXIS RESTRAINED

FIGURE 4

GE Astro Space	KINEMATIC MOUNT, STANDARD MECH. INTFC. CONTROL DWG.

17

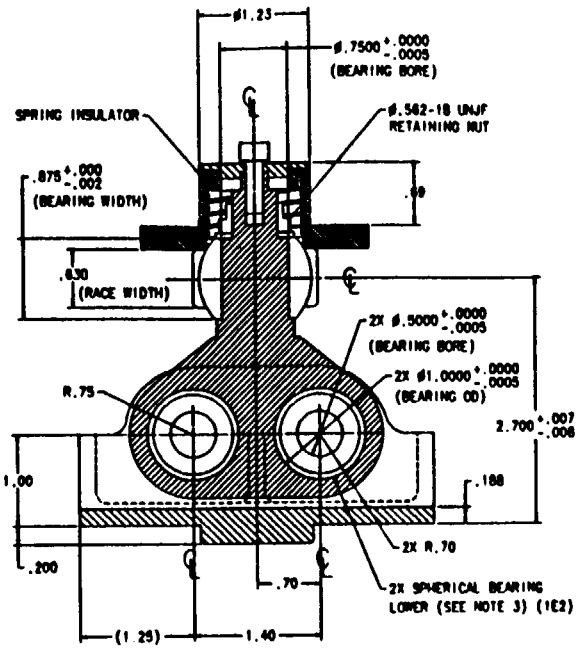

SECTION B-B (2A5)

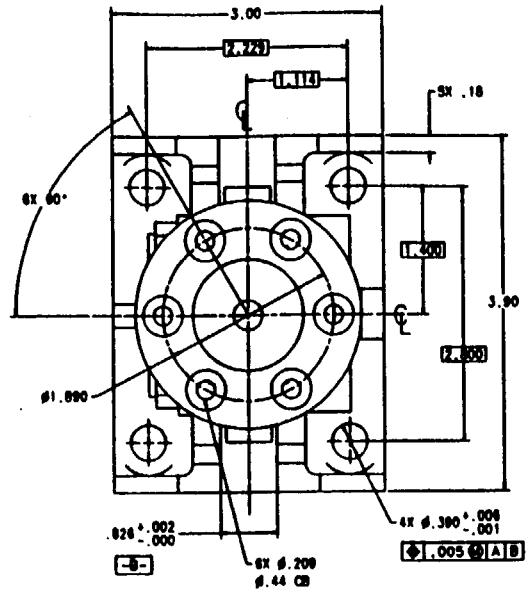

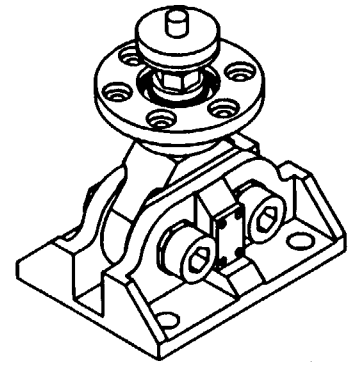

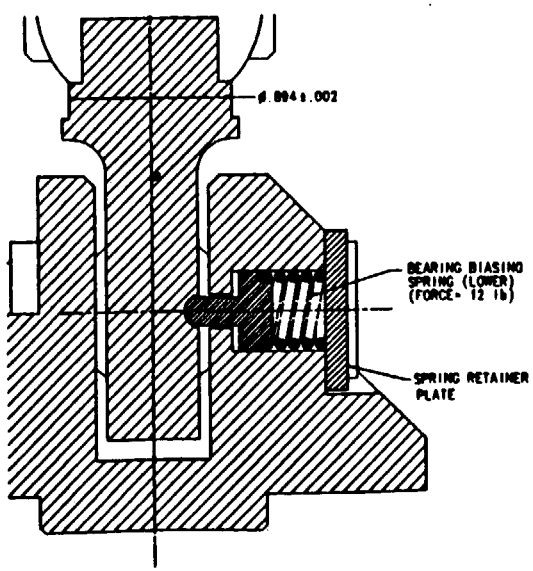

DETAIL A (2B4)

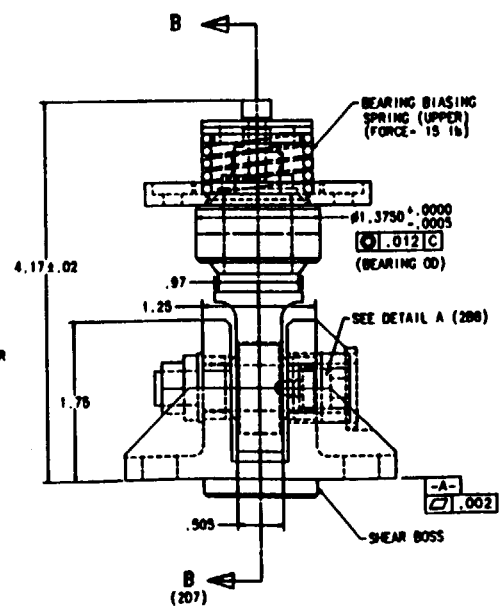

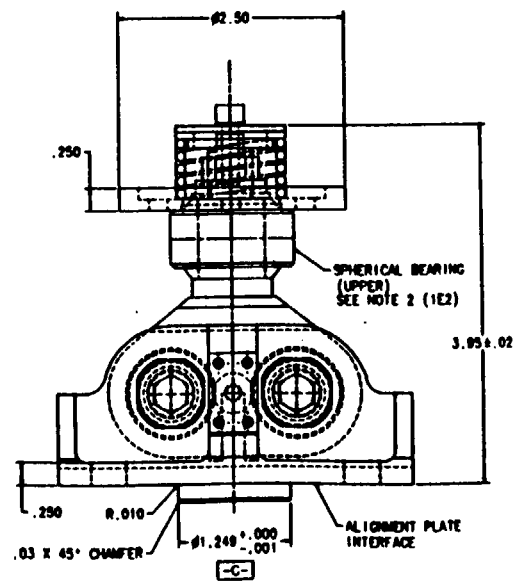

2-AXIS
RESTRAINED

FIGURE 5

E 49671 1CD20001400

18

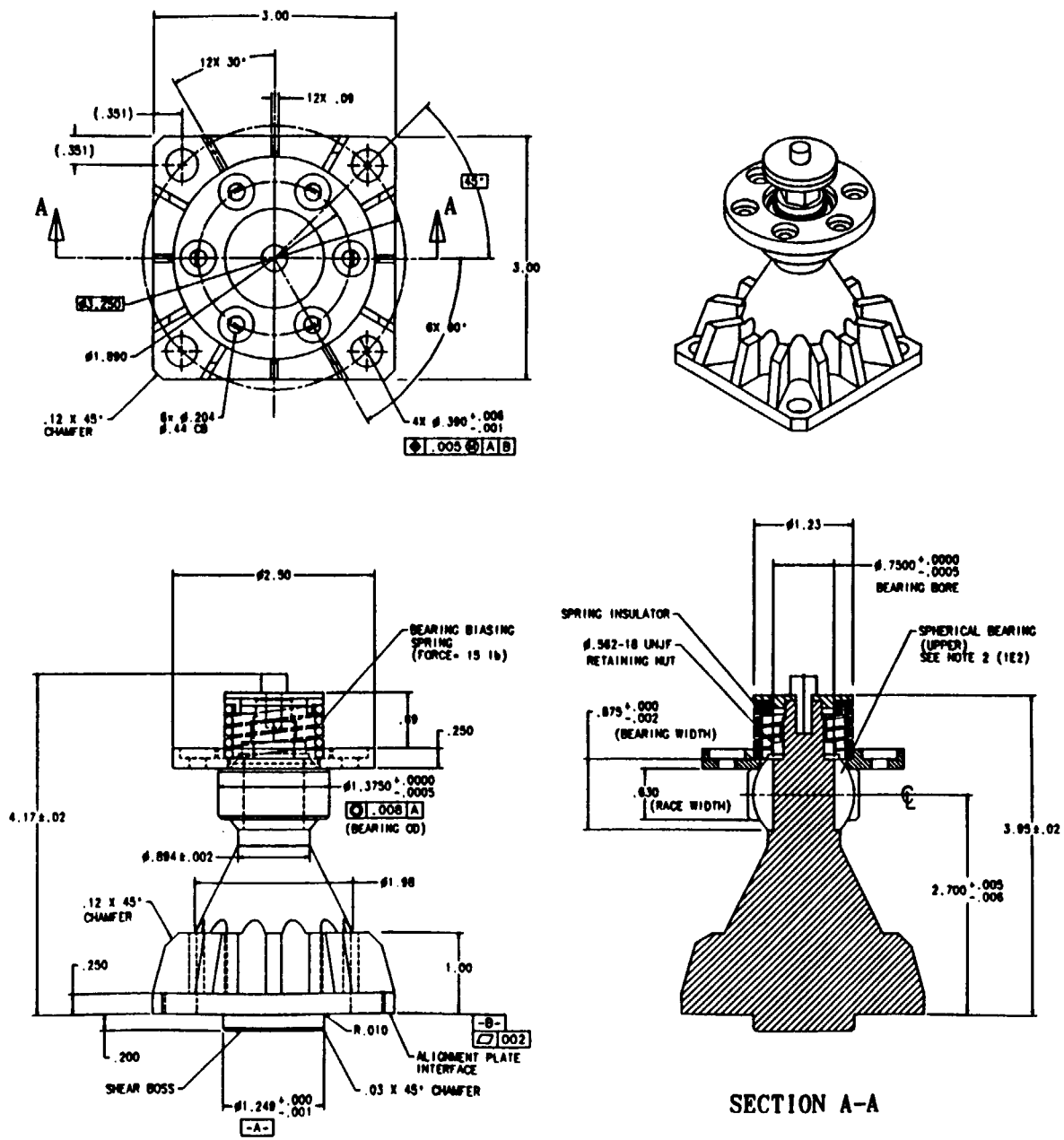
3.00
12X 30°
12X .09
(.351)
(.351)
A
A
45°
3.00
6X 60°
ø1.890
.12 X 45° CHAMFER
6x ø.204 ø.44 CB
4X ø.390 +.006 -.001
.005 A B
ø2.50
BEARING BIASING SPRING (FORCE= 15 lb)
.09
.250
ø1.3750 +.0000 -.0005
.008 A
(BEARING OD)
4.17±.02
ø.894±.002
ø1.98
.12 X 45° CHAMFER
.250
1.00
R.010
-B-
.002
.200
ALIGNMENT PLATE INTERFACE
SHEAR BOSS
.03 X 45° CHAMFER
ø1.249 +.000 -.001
-A-
ø1.23
ø.7500 +.0000 -.0005
BEARING BORE
SPRING INSULATOR
ø.562-18 UNJF RETAINING NUT
SPHERICAL BEARING (UPPER) SEE NOTE 2 (1E2)
.875 +.000 -.002
(BEARING WIDTH)
.630
(RACE WIDTH)
3.95±.02
2.700 +.005 -.006
SECTION A-A
3-AXIS RESTRAINED

FIGURE 6

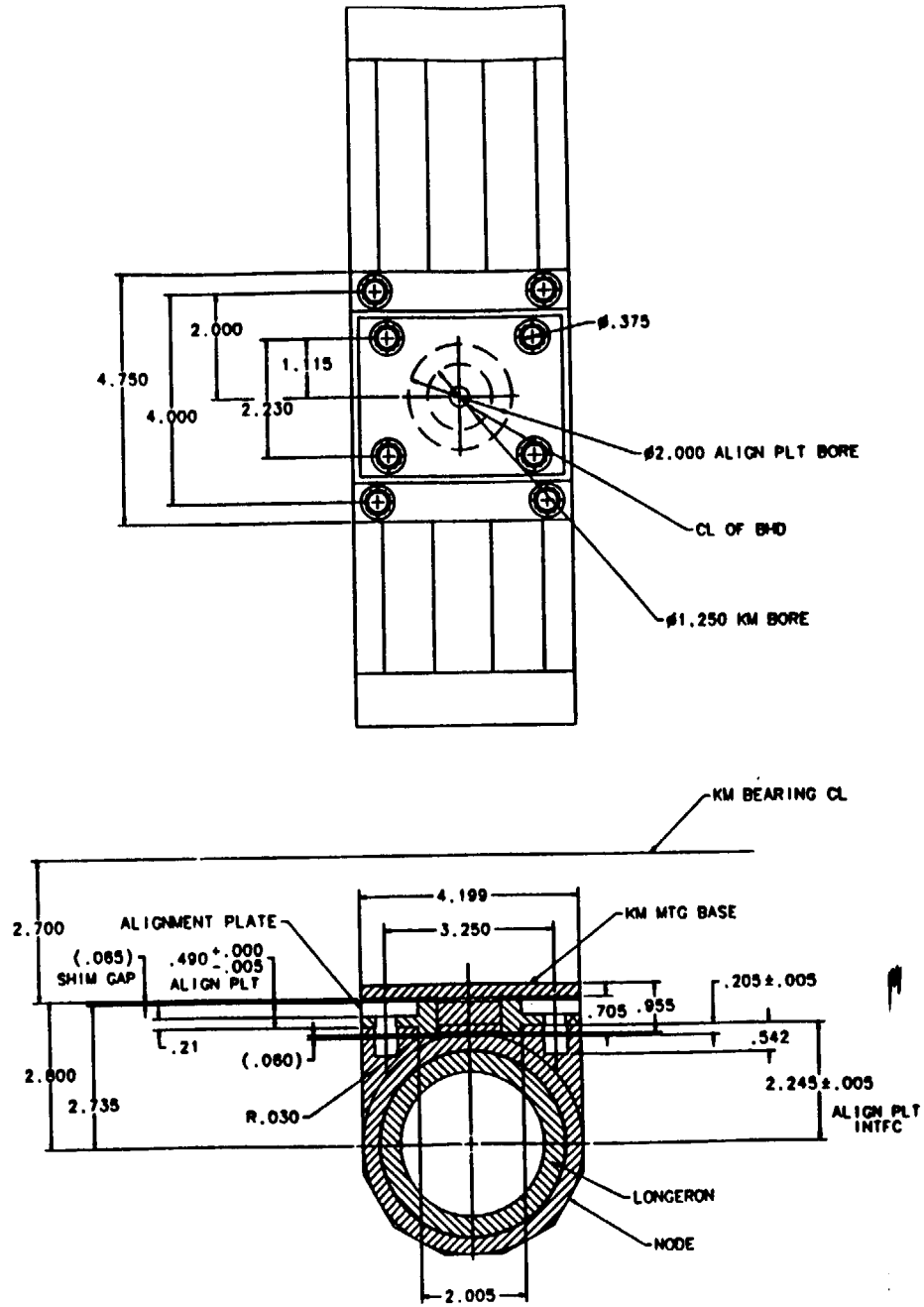

ALIGNMENT PLATE INTERFACE
TO NODE FITTING AND KM

FIGURE 7

PRELIMINAR
V 1993
LLY

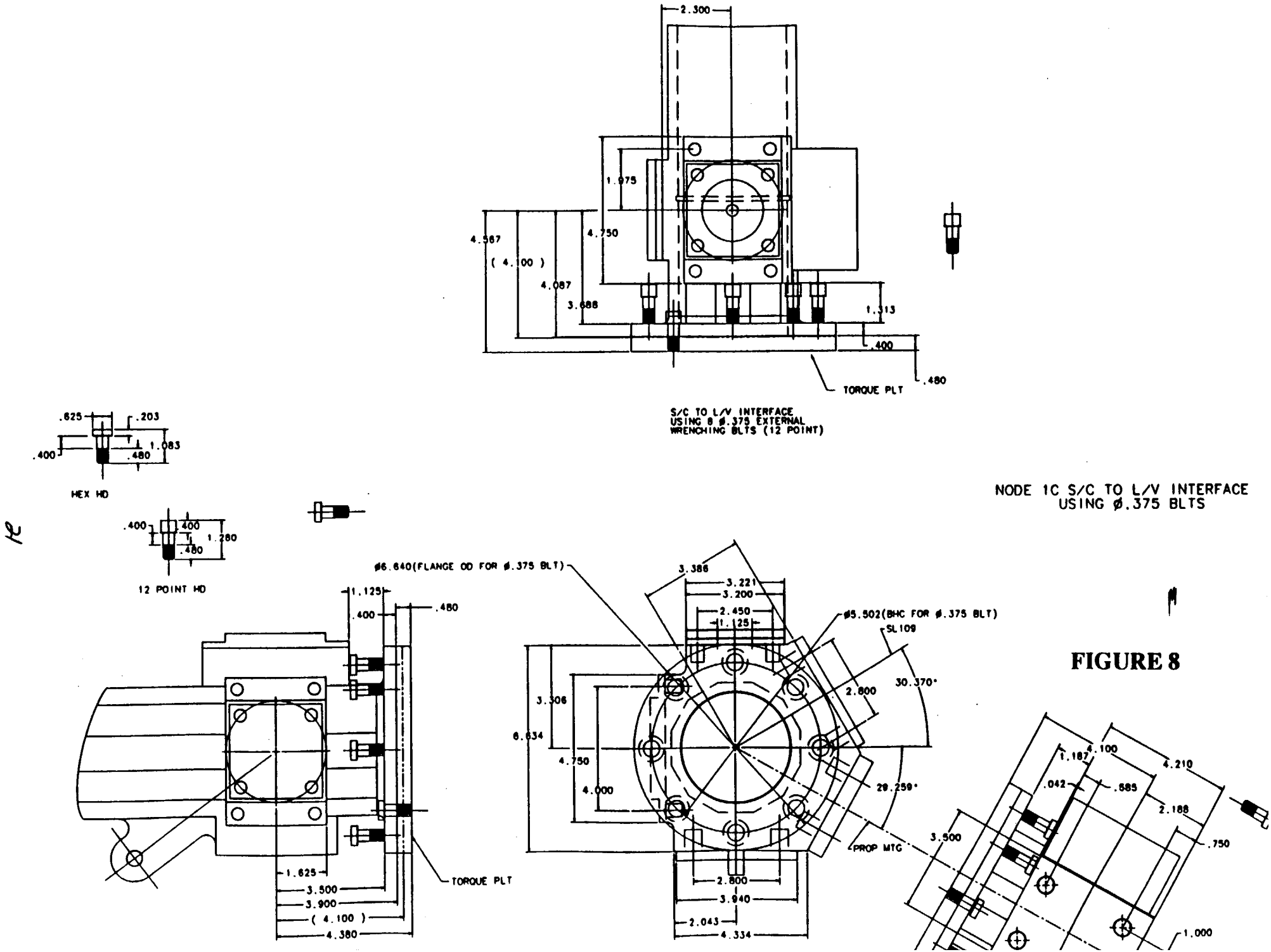

NODE 1C S/C TO L/V INTERFACE
USING ø.375 BLTS

FIGURE 8

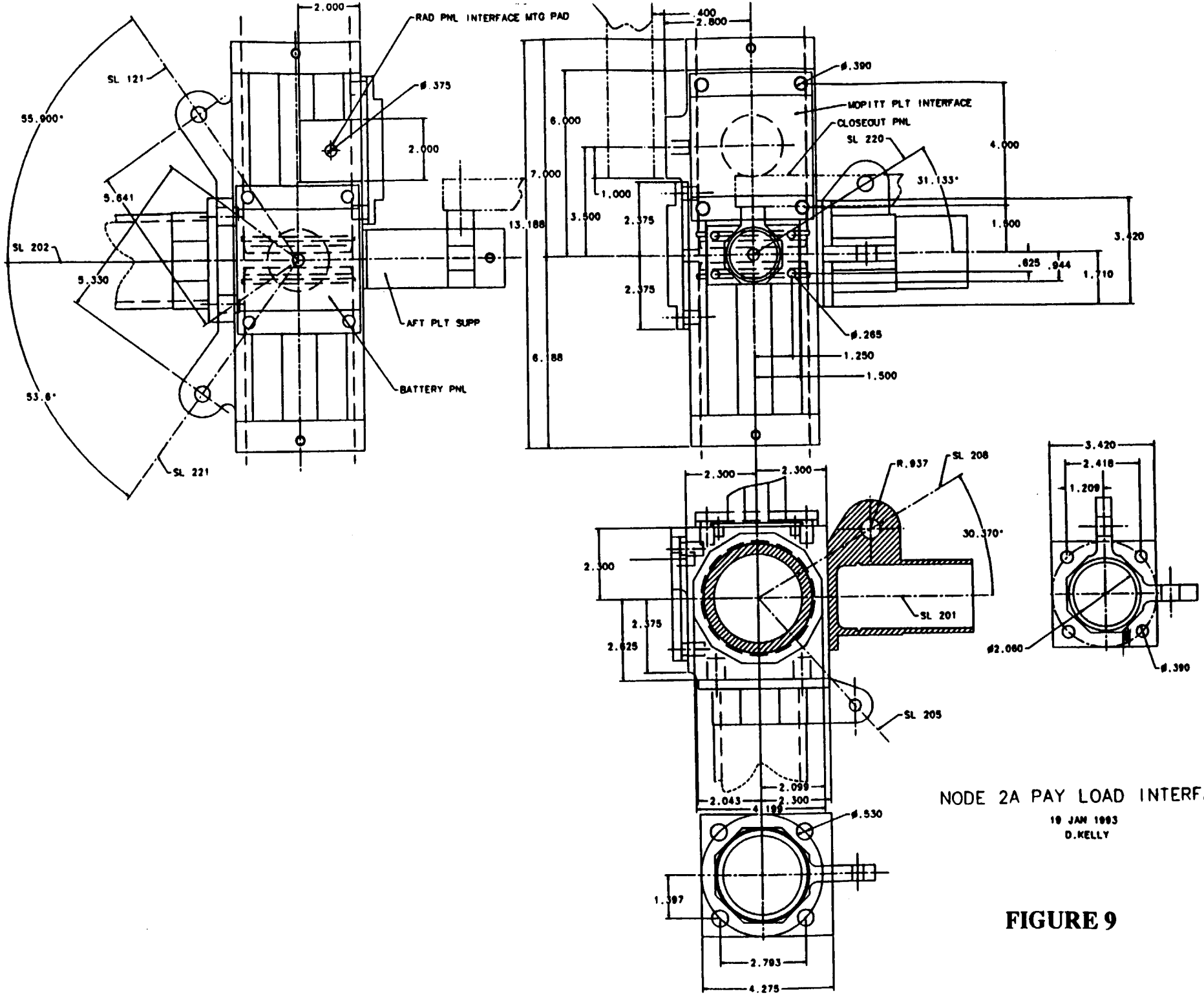

NODE 2A PAY LOAD INTERFAC

19 JAN 1993
D.KELLY

FIGURE 9

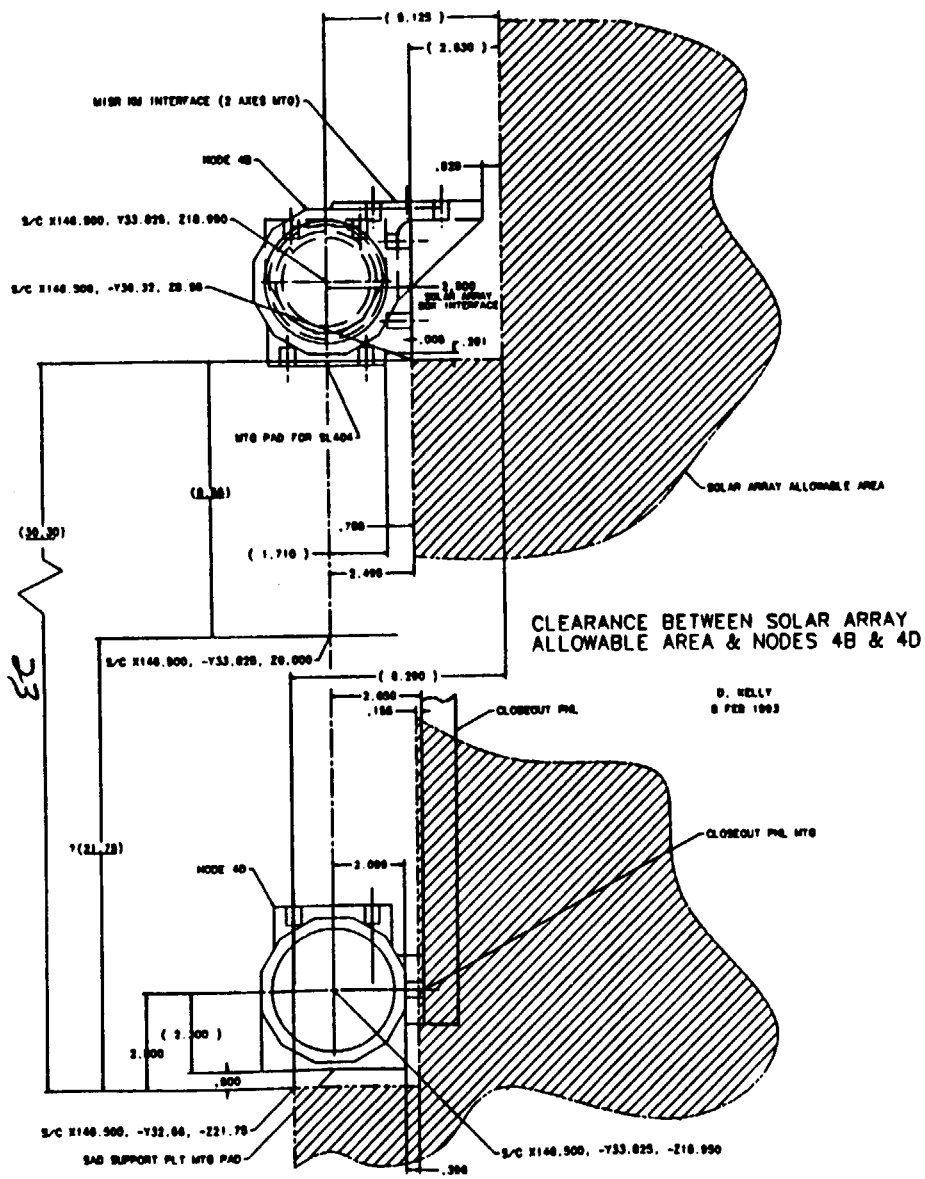

CLEARANCE BETWEEN SOLAR ARRAY ALLOWABLE AREA & NODES 4B & 4D

D. KELLY
8 FEB 1993

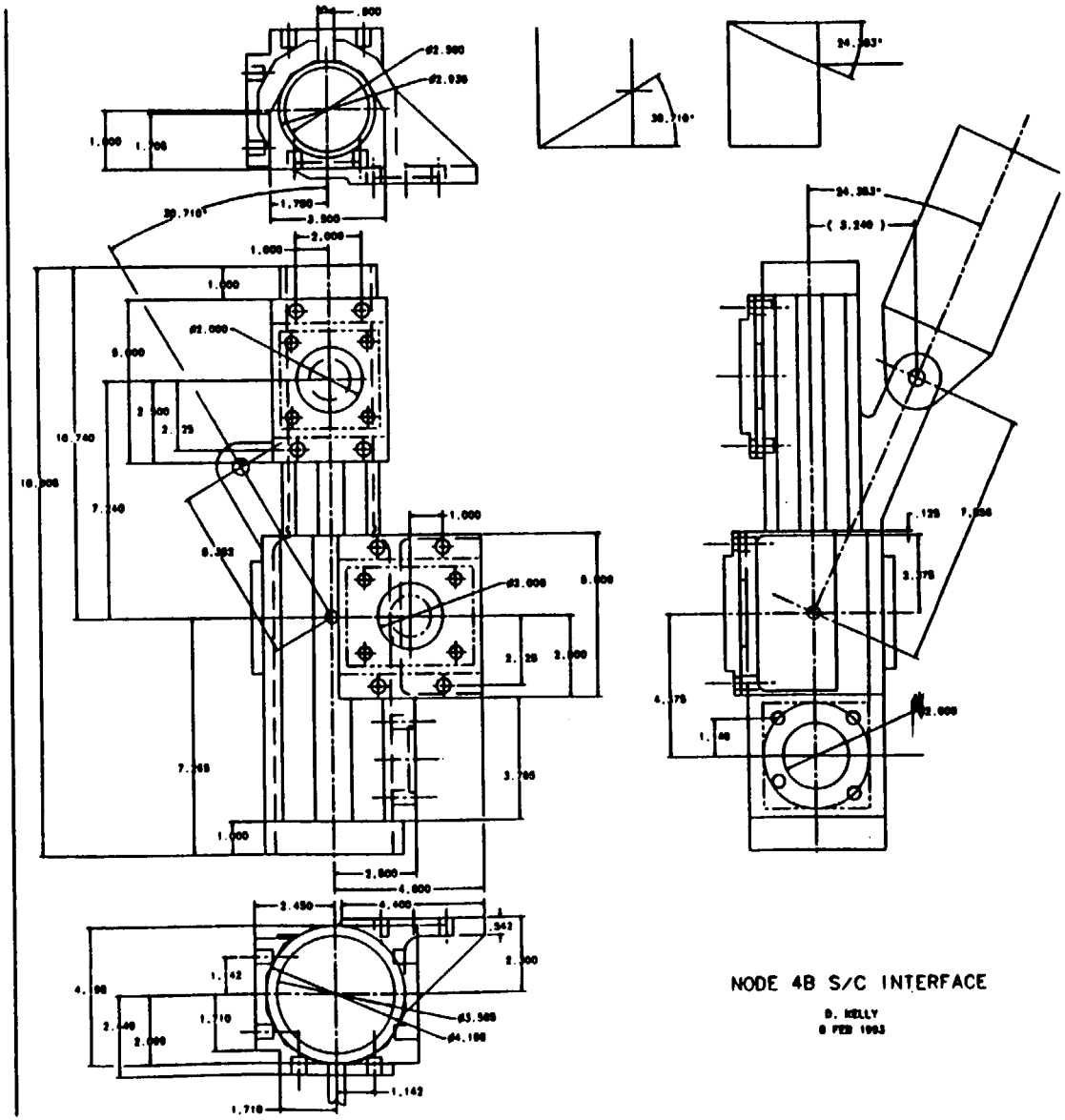

NODE 4B S/C INTERFACE

D. KELLY
8 FEB 1993

FIGURE 10

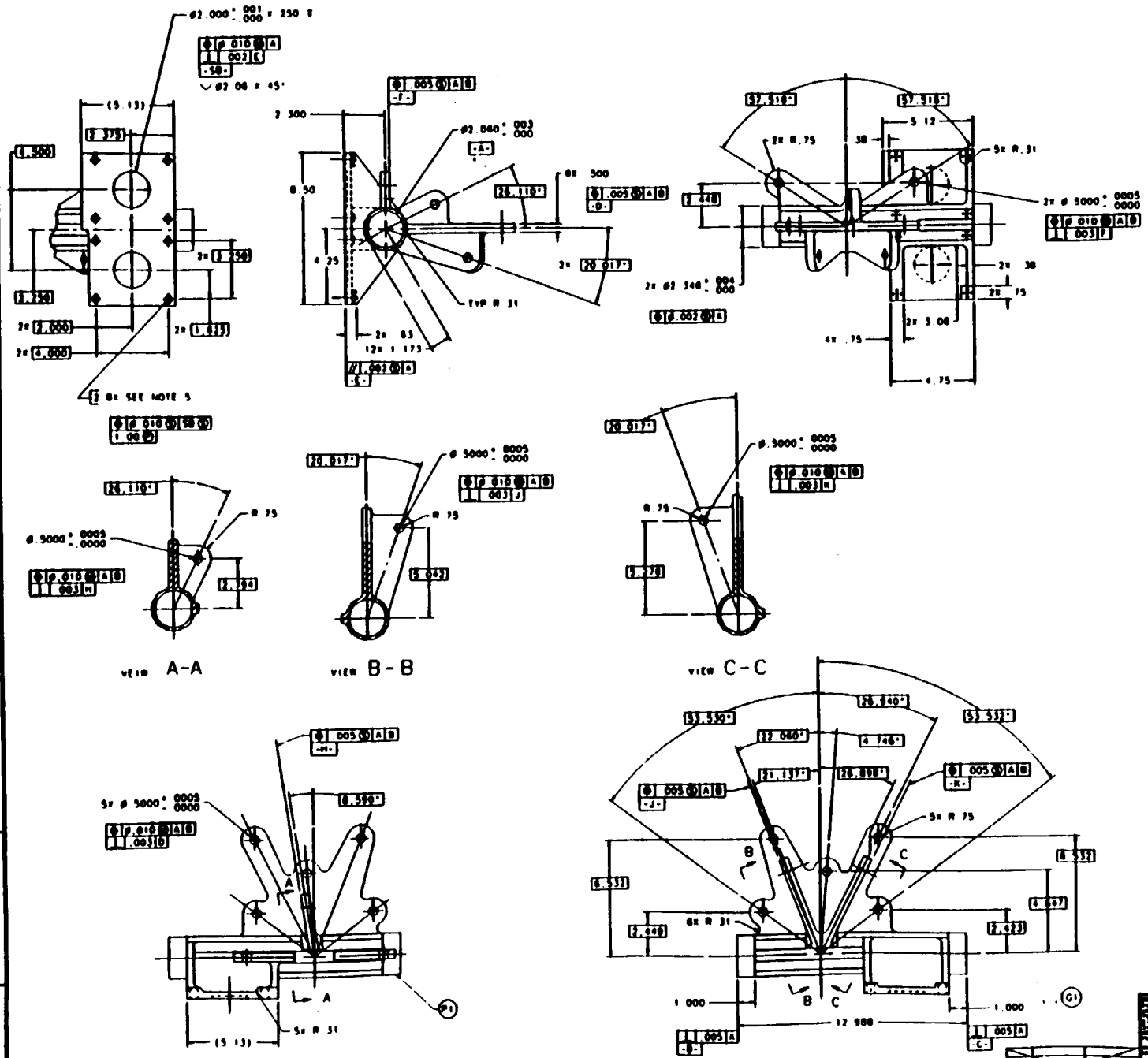

NOTES

1. INTERPRETATION OF DRAWING TERMS AND TOLERANCES PER S30009.
2. MARK "23001-23000067 P_ OR G_"NO AS APPLICABLE PER S32534CL7A.
3. MATERIAL (95300069)
   A. TITANIUM ALLOY 6AL-4V (DOUBLE MELT) CONDITION "A", SURFACE FINISH 1 OR 11 BAR OR FORGING PER MIL-T-9047 EXCEPT MINIMUM MECHANICAL PROPERTIES IN THE SHORT TRANSVERSE ORIENTATION SHALL BE

FTU	125KSI
FTY	115KSI
ELONGATION	8% IN 2-IN
RED OF AREA	12%

   B. ROOM TEMPERATURE FRACTURE TOUGHNESS (KIC) SHALL BE

   55KSI-IN$^{1/2}$ MINIMUM WITH A S-L SPECIMEN TESTED PER ASTM-E-399.
4. CE INSPECTION TO WEIGH PART PER 171A4900
5. FABRICATION AND PROCESSING SHALL CONFORM TO 47-293970.
7. ALL FILLET RADII TO BE R 03 UNLESS OTHERWISE SPECIFIED

FIGURE 11

PRELIMINARY

LAST REV 9/21/92

CE Astro Space

24

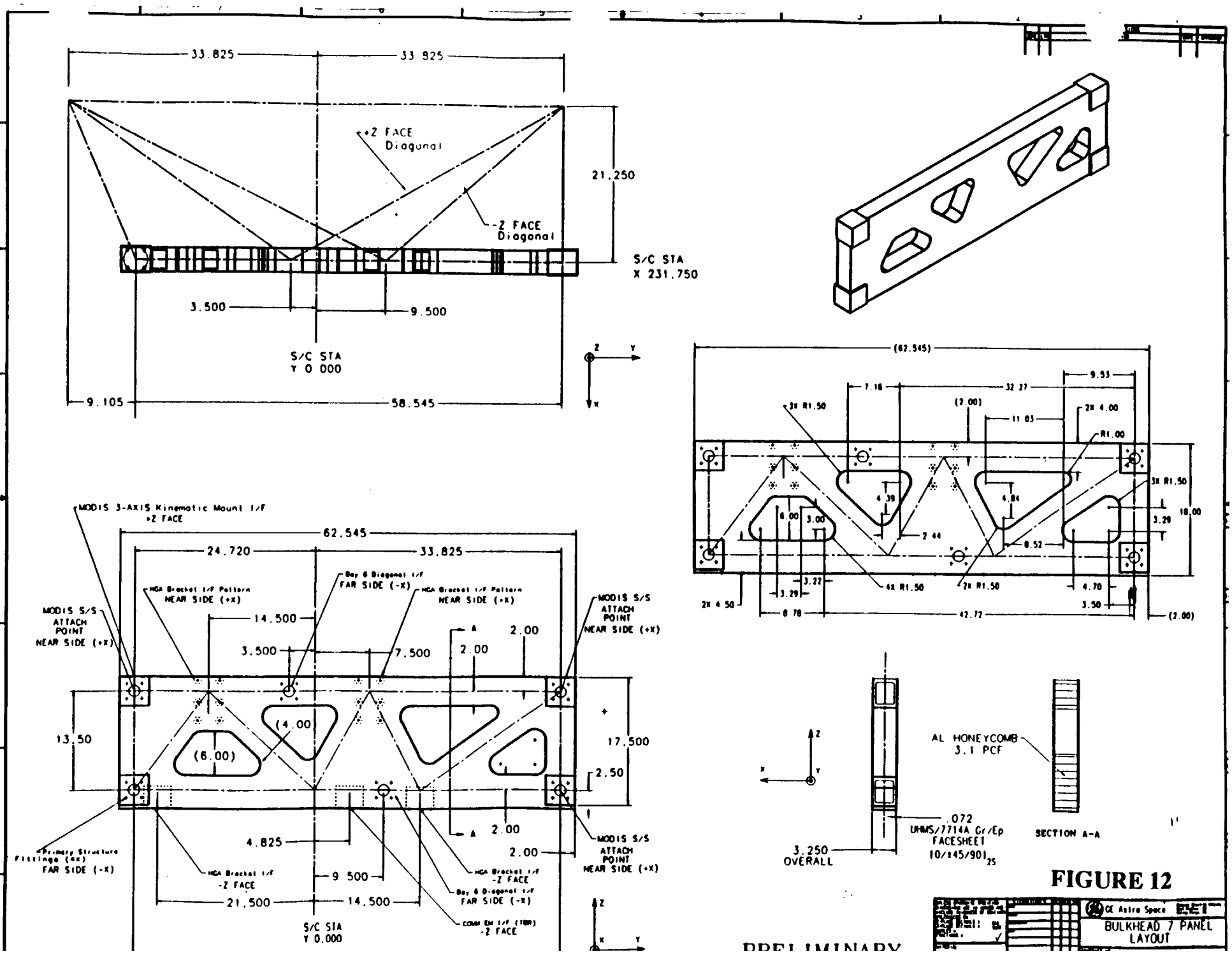

FIGURE 12

PRELIMINARY

25

MARTIN MARIETTA
ASTRO SPACE

EOS–DN–CNF–020

DESIGN NOTE

TITLE: Propulsion Module Layouts

AUTHOR: William J. Flite, Jr. WJF

AUTHOR'S MANAGER: Lou Rattenni **DATE** 7/6/93

SE&I MANAGER: Scott Carey for S. Carey **DATE** 7/8/93

CHIEF ENGINEER: Dennis Longcoy D. Longcoy **DATE** 7/8/93

REVISIONS

LETTER	DESCRIPTION	DATE	AUTHOR
–	Initial Release	7/7/93	W. Flite, Jr.

MARTIN MARIETTA
ASTRO SPACE

DESIGN NOTE SUMMARY

DN#: EOS–DN–CNF–020 Revision: – Date: 07 July 1993

Title: Propulsion Module Layouts

Author: William J. Flite, Jr. Source ID (ESTA, PD, Memo, etc.):

Purpose/Questions Answered:

To present the Propulsion Module baseline design for the EOS–AM Spacecraft PDR. Also, to briefly describe the changes to the baseline since Spacecraft Bus and Subsystem PDRs.

Summary/Answers:

The design configuration of the propulsion module has been described and detailed layouts presented which, together, define the baseline design.

Recommendations: (Be Specific)	Accepted	Rejected	Baselined	Date

Open Items/Action Required	Responsible Person	Due Date

Comments

Form Completed By William J. Flite Jr Date 7/6/93 Page ___ of ___

EOS Form 007–02/01/93

1 INTRODUCTION

The purpose of this design note is to present the baseline design for the Propulsion Module highlighting the major features as well as noting significant changes since the Spacecraft Bus and Subsystem PDRs.

2 DESCRIPTION

The Propulsion Module (PM) contains the entire propulsion subsystem including all supporting structure and electrical boxes. The overall size of the PM is roughly 62" x 68" x 52" long (see Figure 1) and fits inside bay 1 of the primary structure. It attaches to the primary structure at the six corners of the base panel through a bolted interface.

2.1 Propulsion Module Features

As previously stated, the entire propulsion subsystem is contained with the PM. This includes: four 5.0 lb_f boost phase thrusters, twelve 1.0 lb_f attitude control thrusters, two service valves, two latching valves, two propellant filters, a low pressure transducer, a propellant tank, and all necessary plumbing (see Figures 1 through 3, propellant tubing not shown). There are several electrical boxes located within the PM. These include: four Electrical Power Conditioners (EPCs), three Fuse Distribution Boxes (FDBs), two Propulsion Module Electronics Assemblies (PMEAs), a Bus Data Unit (BDU), and four Heater Control Electronics (HCEs). The last feature of the PM is the structure which supports the propulsion, electrical, and thermal subsystems. A tank support ring, base panel, and twelve support struts constitute the PM structure subsystem. Figures 1 through 3 illustrate the overall configuration of the Propulsion Module and where the various components are located with respect to one another.

Figure 4 illustrates the baseline thruster configuration. Analysis of the thrusters has shown that the optimal configuration of the 5.0 lb_f thrusters is when they are centered around the spacecraft beginning–of–life (BOL) c.g. and canted at a 4° angle. Eight of the 1.0 lb_f thrusters are canted at a 30° angle while the thrust vectors of the remaining four pass through the spacecraft BOL c.g.

The locations of the electrical boxes within the PM are illustrated in Figure 5 and have been determined with the goal of providing maximum clearance between boxes and other subsystems as well as harness accessibility. Due to tight volume constraints on the back (–X side) of the base panel imposed by the launch vehicle, some of the electrical boxes were forced to the other side of the base panel. The BDU, HCEs, and PMEAs are located inside the PM (on the +X side of the base panel) while the EPCs and FDBs are located on the outside (see Figures 2 & 5). The FDBs were placed in this location because of accessibility requirements during I&T.

Figure 6 shows the location of the propellant/pressurant service (fill and drain) valves. These valves must be positioned such that they are accessible during all phases of integration up to and including encapsulation within the launch vehicle fairing. Access to the service valves is through a cutout in the torque rod support panel located on the +Y side of the spacecraft. In order to maximize access to the valves through this cutout, they are canted at a 30° angle. The valves can be accessed while inside the launch vehicle through either an optional access door in the cylindrical portion of the fairing or through one of the standard access doors located in the boattail section of the fairing.

2.2 Changes to Propulsion Module Design

Since the structures and mechanisms PDR, significant changes have been made to the Propulsion Module configuration. The number of propellant tanks has been reduced from four to one, the pressurization manifold has been eliminated, the number of 5.0 lb_f thrusters has been reduced from eight to four, the locations of all the thrusters has changed due to changes in the spacecraft c.g., the number of components in the propulsion subsystem has been reduced, the EPCs and FDBs moved outside while the BDU and PMEAs moved inside the PM, the structure has changed from a four panel design to a panel/strut/ring design, and the amount of propellant required has been reduced roughly in half. The resulting changes have made the Propulsion Module lighter, less expensive, and easier to integrate.

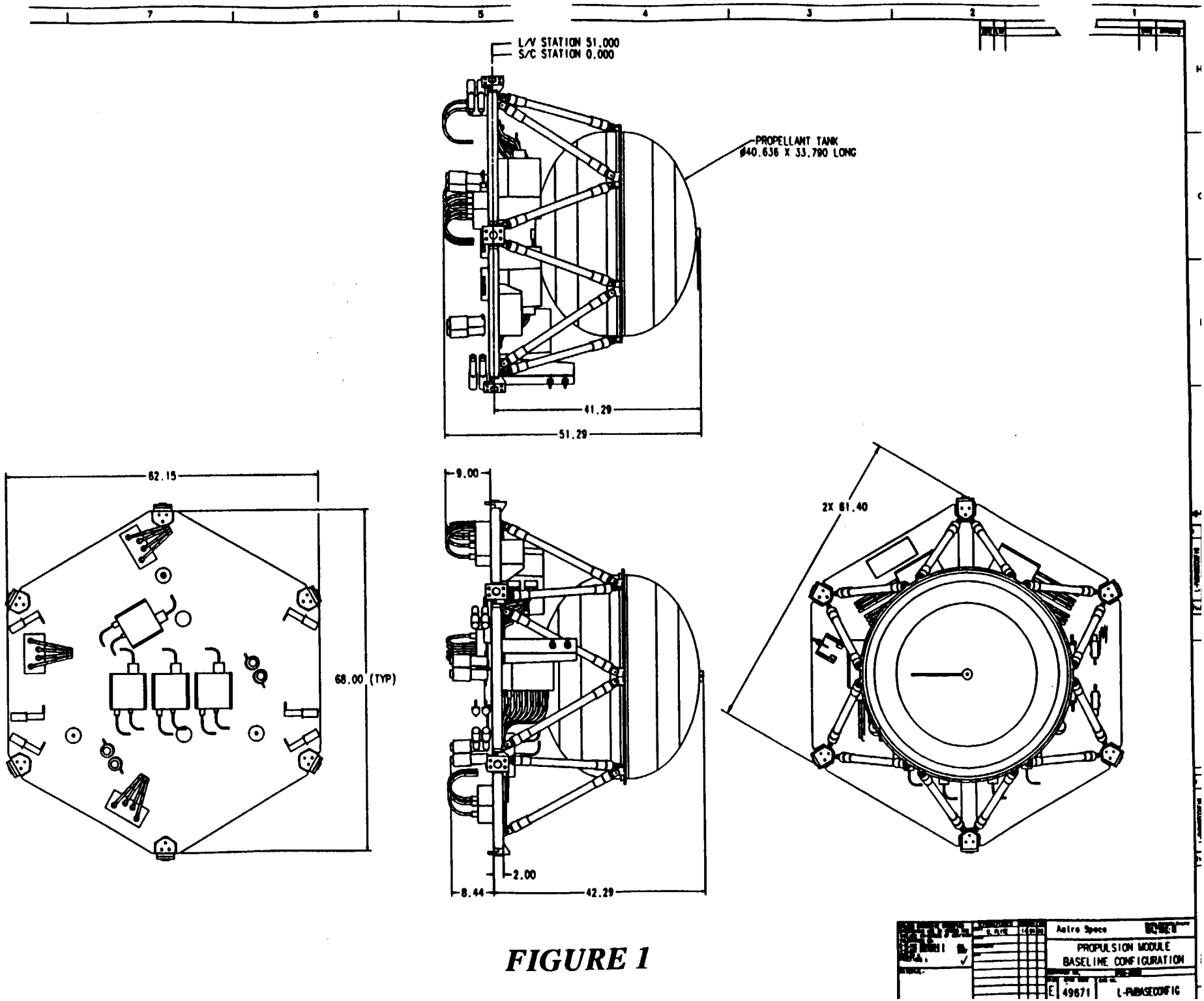
L/V STATION 51.000
S/C STATION 0.000
PROPELLANT TANK
ø40.636 X 33.790 LONG
41.29
51.29
62.15
68.00 (TYP)
9.00
2.00
8.44
42.29
2X 61.40
Astro Space
PROPULSION MODULE
BASELINE CONFIGURATION
E 49671
L-PMBASECONFIG

FIGURE 1

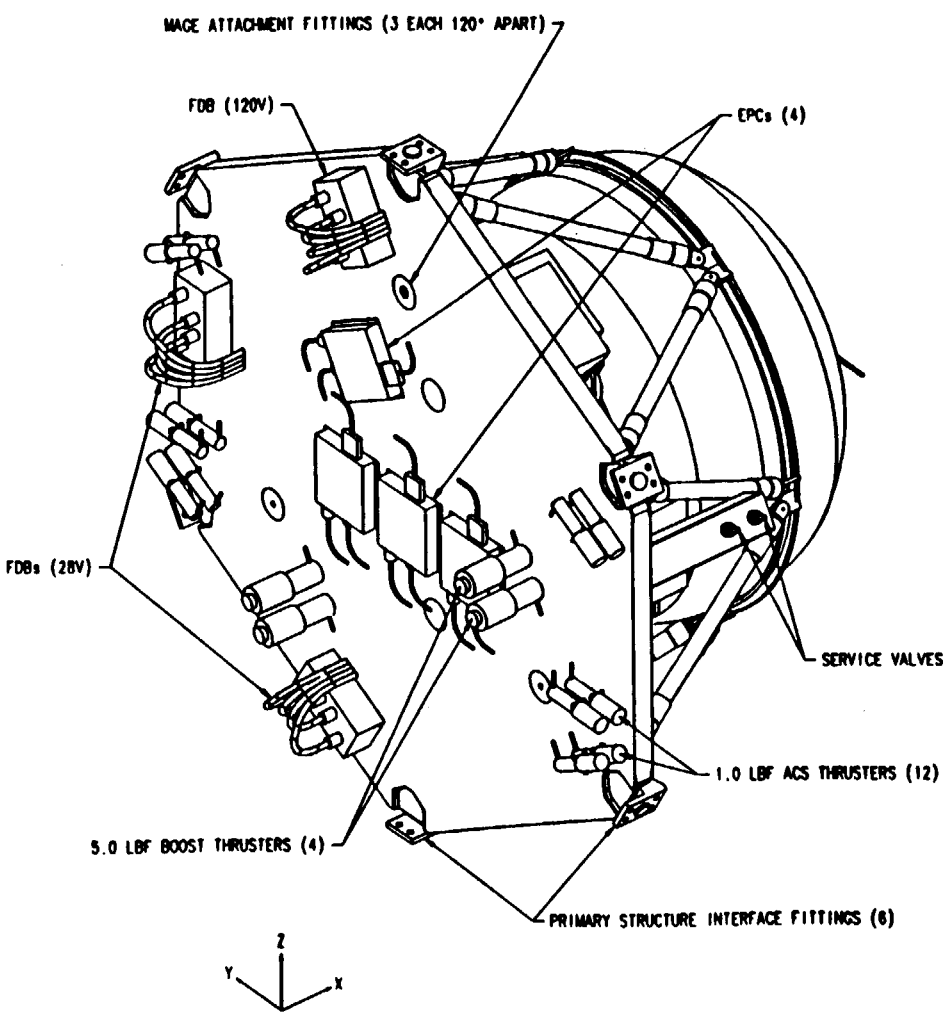

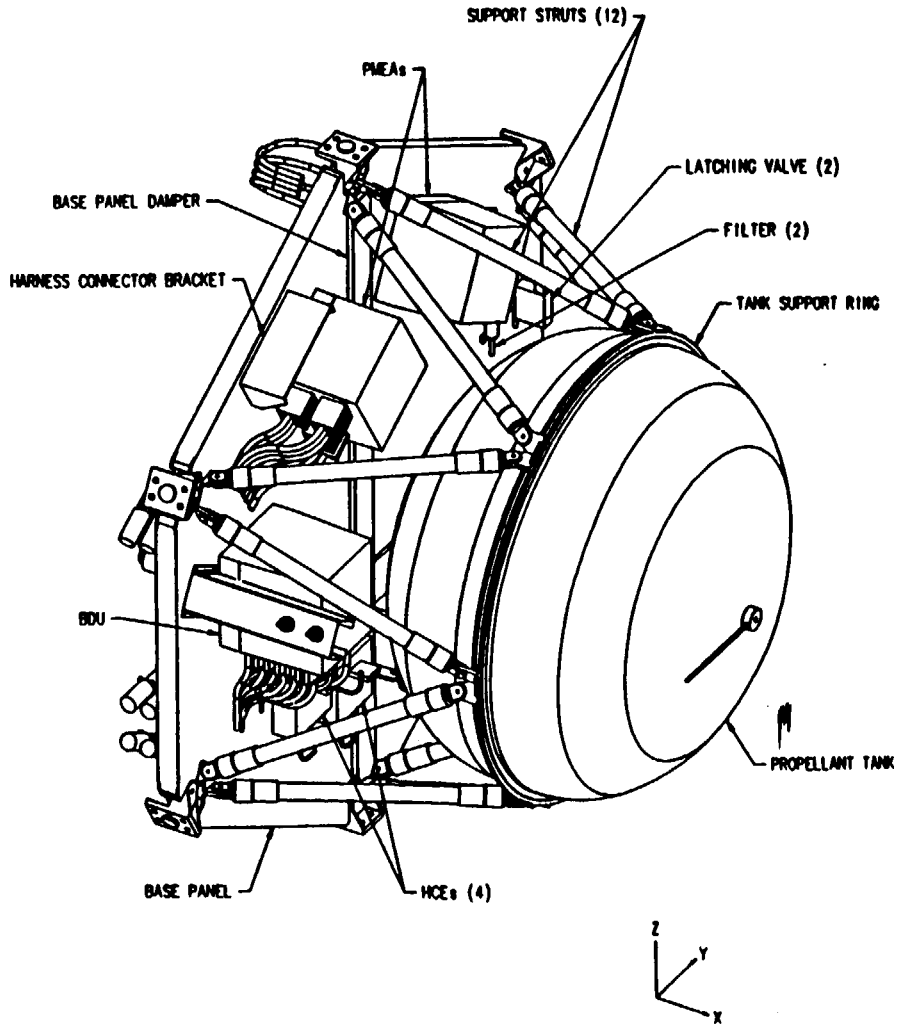

HIDDEN: PRESSURE TRANSDUCER

HIDDEN COMPONENTS ARE ON +X +Y SIDE OF BASE PANEL

FIGURE 2

E 49471 L-PMBASECONFIG

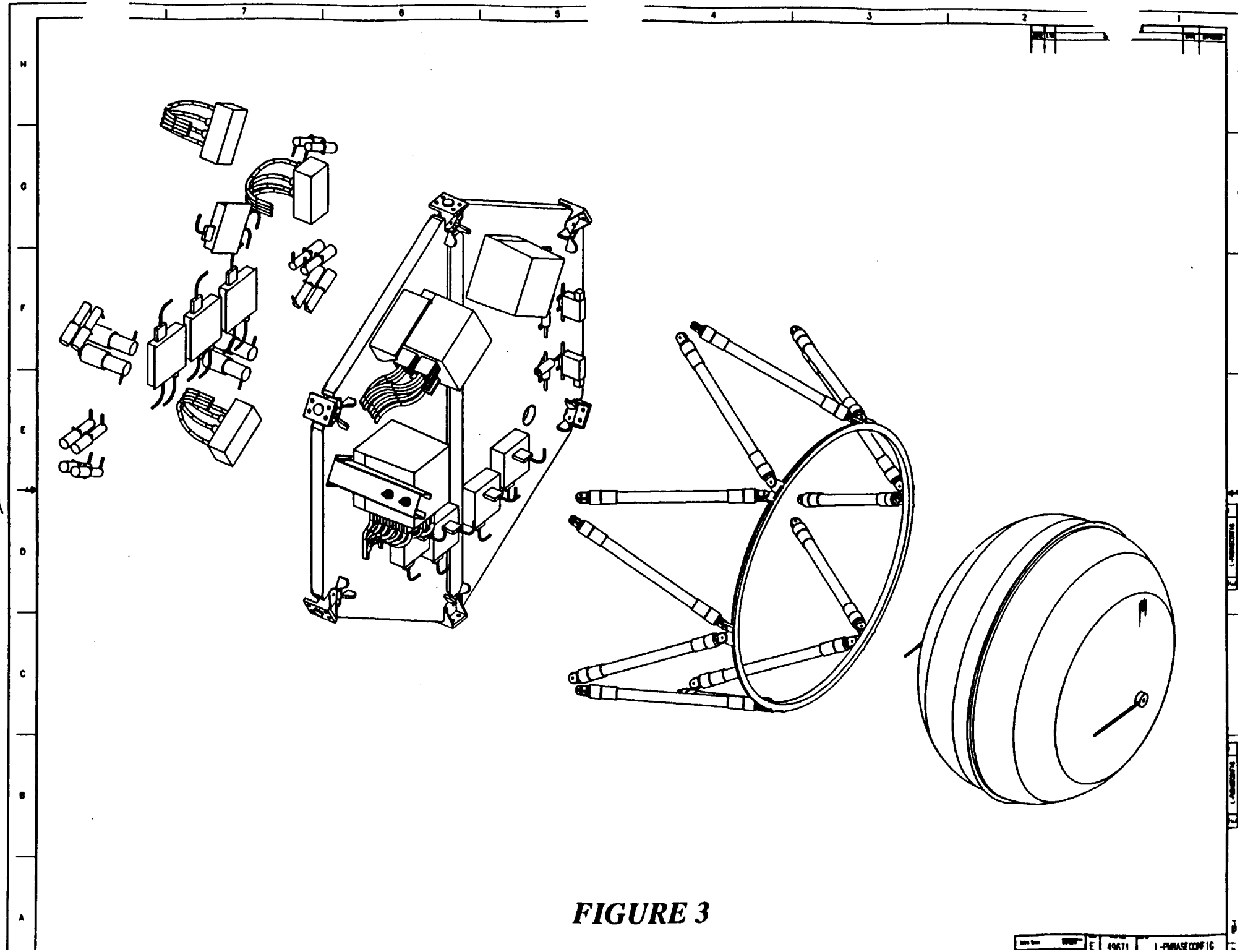

FIGURE 3

5

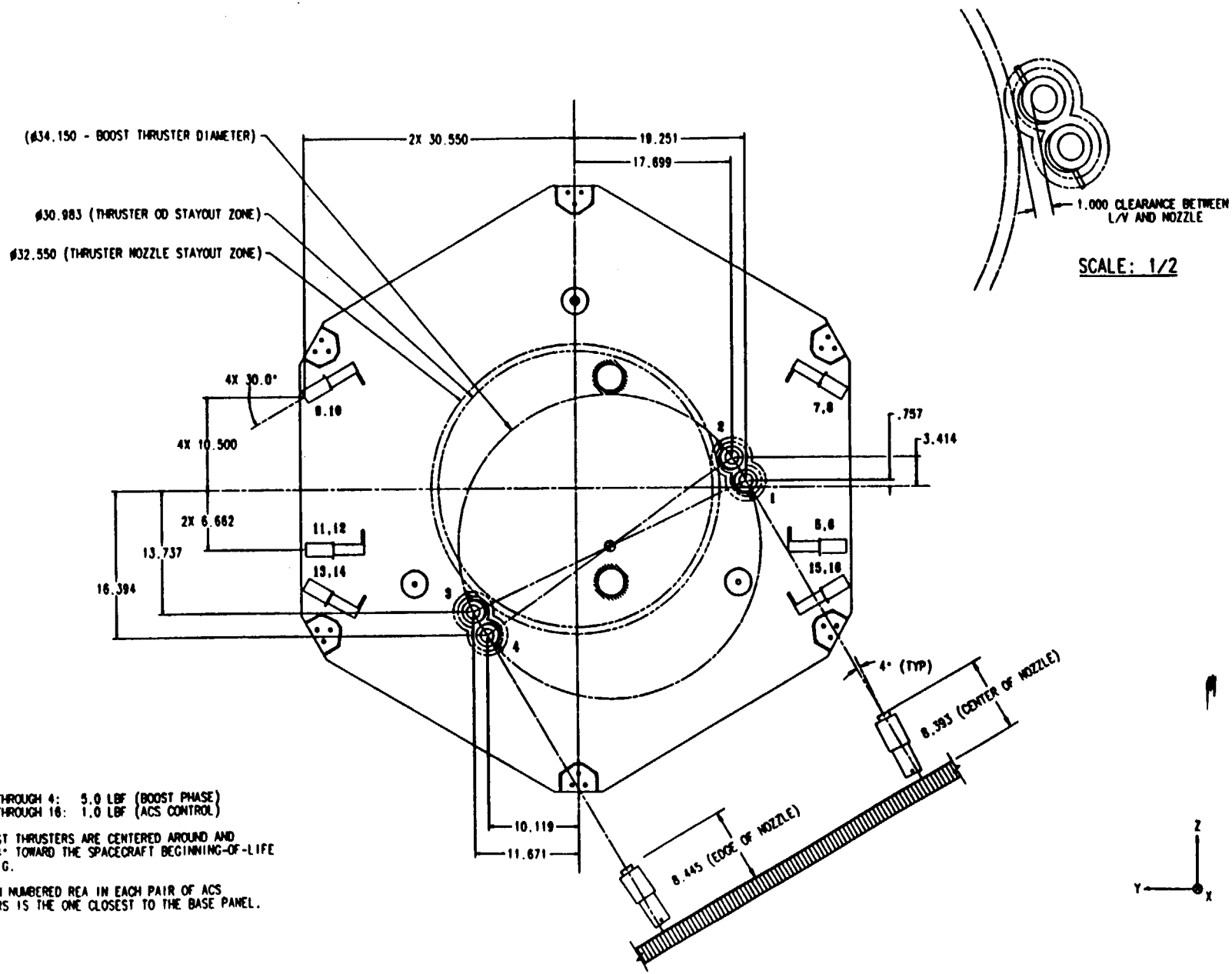

NOTES:

1. REAs 1 THROUGH 4: 5.0 LBF (BOOST PHASE)
   REAs 5 THROUGH 16: 1.0 LBF (ACS CONTROL)
2. ALL BOOST THRUSTERS ARE CENTERED AROUND AND CANTED 4° TOWARD THE SPACECRAFT BEGINNING-OF-LIFE (BOL) C.G.
3. THE EVEN NUMBERED REA IN EACH PAIR OF ACS THRUSTERS IS THE ONE CLOSEST TO THE BASE PANEL.

FIGURE 4

E 49671 L-PADBASECONFIG

LTR	Y DIM	Z DIM	LOC	COMPONENT
A	-8.433	+18.655	NS	PMEA 1
B	+9.083	+19.781	NS	PMEA 2
C	-19.250	+2.200	NS	BDU
D	-9.819	-2.000	FS	EPC 1
E	-1.269	-2.000	FS	EPC 4
F	+7.281	-2.000	FS	EPC 2
G	+4.964	+11.546	FS	EPC 3
H	+7.669	-25.210	FS	FDB 3 (28V)
J	+25.812	+5.765	FS	FDB 2 (28V)
K	+5.003	+26.849	FS	FDB 1 (120V)
L	-12.000	-14.000	NS	HCE 1
M	-5.000	-16.762	NS	HCE 2
N	+5.000	-16.762	NS	HCE 3
P	+12.000	-14.000	NS	HCE 4
R	-14.975	+23.456	NS	S/C HARNESS BRKT

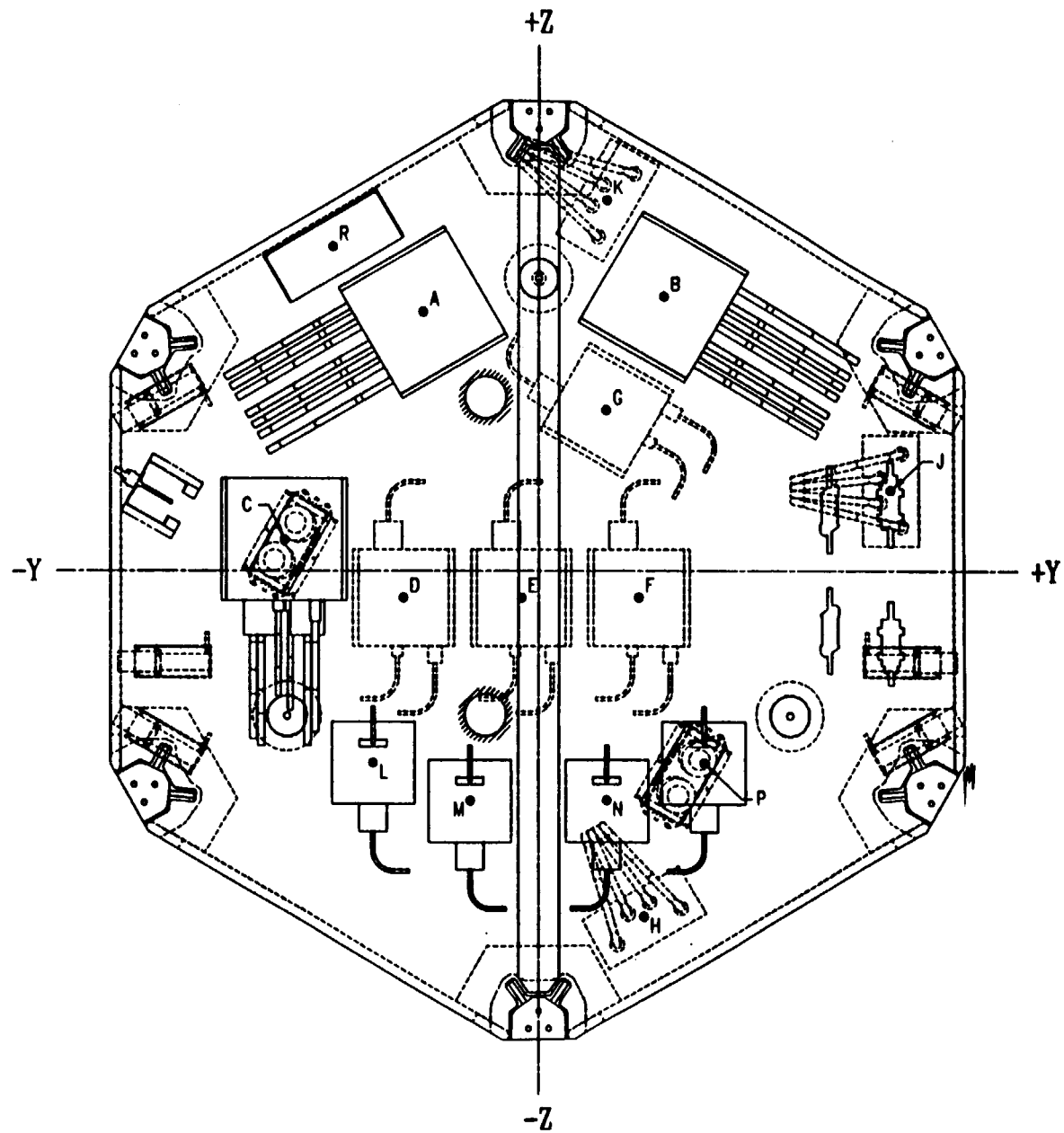

FIGURE 5

E 49671 L-PMBASECONFIG

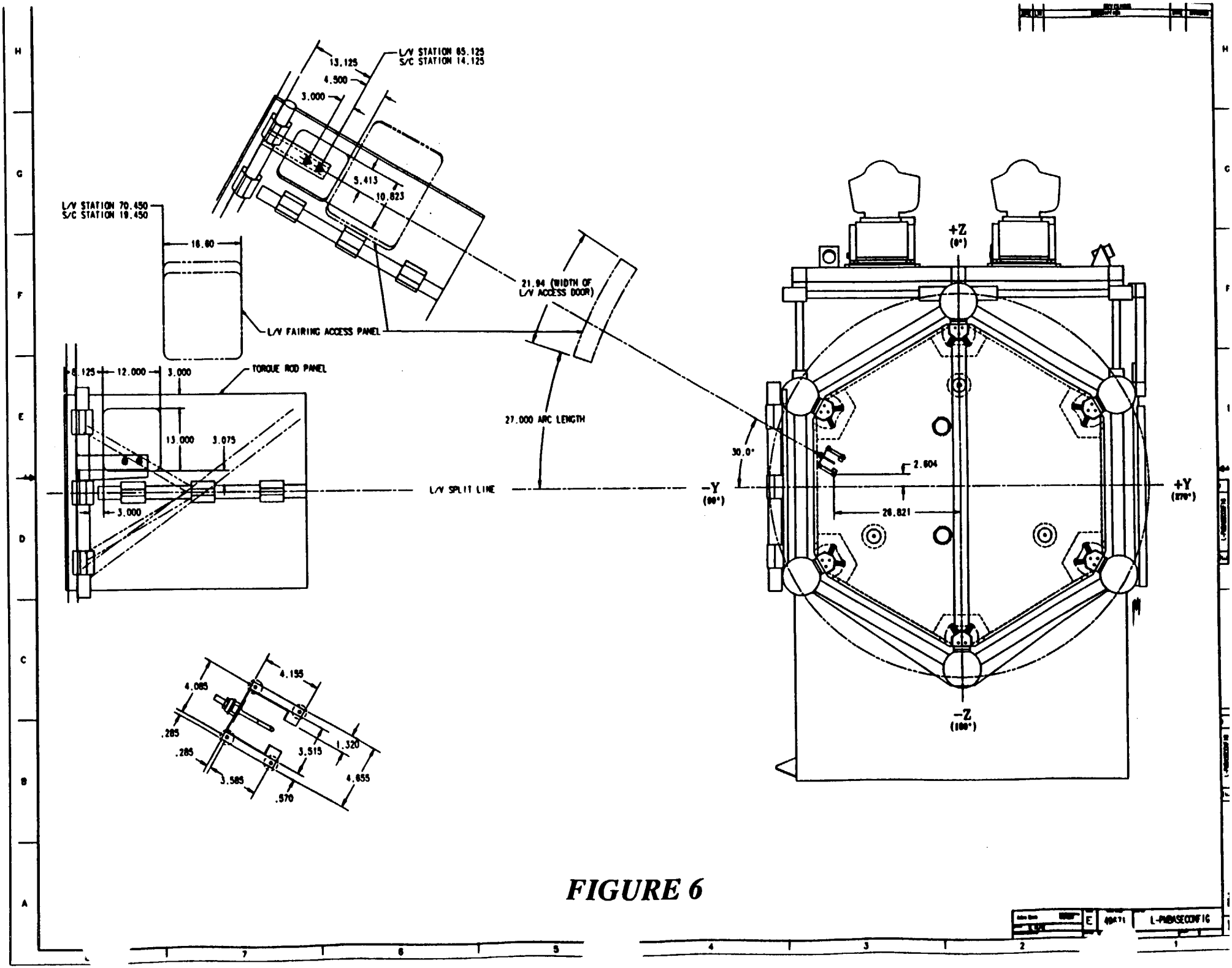
L/V STATION 85.125
S/C STATION 14.125
13.125
4.500
3.000
5.413
10.823
L/V STATION 70.450
S/C STATION 19.450
16.80
L/V FAIRING ACCESS PANEL
21.94 (WIDTH OF L/V ACCESS DOOR)
TORQUE ROD PANEL
6.125
12.000
3.000
13.000
3.075
3.000
27.000 ARC LENGTH
L/V SPLIT LINE
30.0°
2.604
26.821
+Z
(0°)
-Y
(90°)
+Y
(270°)
-Z
(180°)
4.155
4.085
.285
.285
3.515
1.320
3.585
.570
4.655

FIGURE 6

MARTIN MARIETTA

EOS-DN-FO-001

DESIGN NOTE

TITLE: Flight Operations Management Plan

AUTHOR: C. Gayle

AUTHOR'S MANAGER: R Schaefer **DATE** 7/1/93

SE&I MANAGER: Scott P. Carey **DATE** 7/2/93

CHIEF ENGINEER: J Schaefer **DATE** 7/2/93

REVISIONS

LETTER	DESCRIPTION	DATE	AUTHOR
	Initial Release	6/30/93	

EOS Form 006-4/91

MARTIN MARIETTA

DESIGN NOTE SUMMARY

DN#: EOS–DN–FO–001 **Revision:** _____ **Date:** 6/30/93

Title: Flight Operations Management Plan

Author: C. Gayle **Source ID (ESTA, PD, Memo, etc.):** _____

Purpose/Questions Answered:

The Flight Operations Management Plan defines the management approach, identifies the organizational structure and interfaces, and provides descriptions of the activities and tasks to be performed and the resources to be allocated to support the development, integration and test, operational readiness verification, and initial operations (orbital verification) of the EOS–AM Spacecraft.

Summary/Answers:

The Flight Operations Management Plan defines the flight operations tasks to be performed in support of the EOS–AM Spacecraft flight operations mission from Contract Start Date (CSD) until the end of the Orbital Verification Period, or 90 days after launch. In addition, there are three one–year options to continue the Sustaining Engineering and Mature Operations (Flight Operations Team) activities.

Recommendations: (Be Specific)	Accepted	Rejected	Baselined	Date
Requirements to be reviewed by System/ Subsystem Engineering and incorporated in design concepts and all appropriate specifications				

Open Items/Action Required	Responsible Person	Due Date

Comments

EOS Form 007–2/91

Form Completed By _____ **Date** _____ **Page** ___ **of** ___

EOS-DN-FO-001
25 June 1993

FLIGHT OPERATIONS MANAGEMENT PLAN for the EOS-AM Spacecraft (Preliminary)

Prepared under:
Contract No. NAS5-32500
NASA Goddard Space Flight Center
Greenbelt, Maryland 20771

Prepared by:
Martin Marietta Astro Space
P. O. Box 800
Princeton, New Jersey 08543-0800

TABLE OF CONTENTS

SECTION/ PARAGRAPH	TITLE	PAGE
1	INTRODUCTION	1
1.1	Purpose and Scope	1
1.2	EOS AM Project Organization	1
1.3	EOS AM Spacecraft Flight Operations Organization	2
1.4	Flight Operations Management Approach	2
1.4.1	Flight Operations Activities	6
1.4.1.1	Flight Operations Activities Concept Definition	6
1.4.1.2	Flight Operations Tasks Identification and Development Concept	8
1.4.2	Flight Operations Data Management and Communication	10
1.4.3	Flight Operations Configuration Management	11
1.4.4	Flight Operations Resources Management	11
1.5	Flight Operations Assumptions	11
2	APPLICABLE DOCUMENTS	13
2.1	EOS AM Project Documents	13
2.2	Other NASA Documents	13
2.3	Martin Marietta Program Documents	14
3	FLIGHT OPERATIONS DEVELOPMENT	16
3.1	Overview	16
3.1.1	Flight Operations Development Responsibilities	16
3.1.2	Flight Operations Development Approach	16
3.1.3	Flight Operations Objectives	18
3.1.4	Flight Operations Development Tasks	19
3.2	Spacecraft Development	20
3.2.1	Overview	20
3.2.2	Spacecraft Subsystems and Flight Software Approach/Objectives	20
3.2.3	Operations Responsibilities	20
3.2.4	Spacecraft Operations Documentation	21
3.2.4.1	Spacecraft Technical Documentation	21
3.2.4.2	Documentation Configuration Management	21
3.2.5	Spacecraft Integration Planning	21
3.2.6	Spacecraft Subsystem Verification Planning	22
3.2.7	Spacecraft Elements Operations Products/Summary	22
3.3	Instrument Operations	23

3.3.1 Overview 23
3.3.2 Instrument Operations Development Responsibilities 23
3.3.3 Instrument Operations Requirements Approach/Objectives 23
3.3.4 Instrument Operations Documentation 24
3.3.5 Instrument Integration Planning 24

3.3.6 Instrument Verification Planning 24
3.3.7 Instrument Operations Products/Summary 24
3.4 Spacecraft Ground Elements 27
3.4.1 Overview 27
3.4.2 Spacecraft Ground Elements Approach/Objectives 27
3.4.3 Spacecraft Analysis Software (SAS) 27
3.4.4 Spacecraft Simulator (SSIM) 27
3.4.5 Software Development Facility (SDF) 27
3.4.6 Spacecraft Ground Elements Integration Planning 29
3.5. ECS Elements Functions/Spacecraft Operation Requirements 30
3.5.1 Overview 30
3.5.2 EOC Facility Role 30
3.5.3 Flight Operations Ground System Requirements 30
3.5.4 EOS Data and Operations System 31
3.5.5 EOS Communication Network 31
3.5.6 ECS Elements Operations Approach/Objectives 31
3.5.7 ECS Elements Operations Integration Planning 31
3.5.8 ECS Elements Operations Readiness Verification 31
3.6 NASA Institutional Elements 32
3.6.1 Overview 32
3.6.2 NASA Institutional Elements Operations Approach/Objectives 32
3.7 Operations Development 33
3.7.1 Overview 33
3.7.2 Operations Management 33
3.7.3 Operations Planning 33
3.7.4 Operations Procedures Development 33
3.7.5 Performance Analysis Planning 34
3.7.6 Database Plan 34
3.7.7 Staffing and Training 39
3.7.8 Integration and Test Support 41
3.7.9 Ground System Readiness activities 41
3.7.10 Launch Readiness activities 41
3.7.11 Operations Development Products/Summary 43

4 Launch and Activation 44
4.1 Overview 44

4.1.1 Launch and Activation Approach/Objectives 44
4.1.2 Staffing 46
4.1.3 Training Support 46
4.1.4 Launch and Activation Responsibilities 47
4.1.4.1 Flight Operations Engineering 47
4.1.4.2 Flight Operations Team (FOT) 47
4.1.4.3 Sustaining Engineering Team 47
4.2 EOS System Testing 48
4.2.1 Test Coordination 48
4.2.2 Launch Site/EOC Launch Readiness 48
4.2.2.1 Launch Readiness Procedures 48

4.2.3 Launch and Activation Operations Documentation 49
4.2.3.1 Documentation Storage Accommodations 49
4.2.3.2 Database Transfer 49
4.3 Launch and Activation Planning 49
4.3.1 Orbital Activation Coordination 50
4.3.2 Operational Mission Planning Coordination 50
4.4 Launch and Activation Products/Summary 50

5 Sustaining Engineering 51
5.1 Overview 51
5.1.1 Staffing Approach/Objectives 51
5.1.2 Sustaining Engineering Responsibilities 51
5.2 Sustaining Engineering FOT Support 51
5.2.1 Off-line analysis 52
5.2.2 Resource Management 52
5.2.3 Anomaly/Fault Detection and Isolation 52
5.3 Sustaining Engineering Products/Summary 52

6 Mature Operations 53
6.1 Overview 53
6.1.1 Approach/Objectives 53
6.1.2 Mature Operations Responsibilities 55
6.1.2.1 Flight Operations Engineering 55
6.1.2.2 Flight Operations Team (FOT) 55
6.1.3 General Management Policies 56
6.2 Mature Operations FOT Readiness 56
6.2.1 Spacecraft Integration and Test Support 56
6.2.2 FOT Training 58
6.2.3 Flight Operations Database and Documentation 58
6.2.4 Operations Readiness Coordination 59
6.2.5 Orbital Activation 59

6.3 Spacecraft Operations 59
6.3.1 Flight Operations Planning 59
6.3.2 Flight Operations Implementation 60
6.4 Instrument Operations 60
6.5 EOC Support 60
6.6 Post 90 Days Operations 60
6.6.1 Flight Operations 60
6.6.2 Sustaining Engineering 60

10 Appendix A: Acronyms and Abbreviations 61

LIST OF FIGURES

FIGURE	TITLE	PAGE
1.	Martin Marietta EOS AM Project Organization	3
2.	Systems Engineering & Integration Functional Organization	4
3.	Flight Operations Engineering Functional Organization	5
4.	Flight Operations Development Overlap With Other Major Flight Operations Activities	7
5.	Flight Operations Activites Representative Primary Task List	9
6	Martin Marietta to GSFC Data Interface	10
7.	Flight Operations Development Plan Concept - Flight	17
8.	IFOU Development Concept	25
9.	IFOU Development Schedule	26
10.	SDF Architectural Overview (TBS)	28
11.	Operations Procedures Development Concept - General	35
12.	Operations Procedures Development Concpet - Spacecraft	36
13.	Operations Procedures Development Concept - Ground System	37
14.	Managed Command Database Concept	38
15.	FOT Staffing Schedule	40
16.	Training Schedule	42
17.	Flight Operations Development Plan Concept - L&A	45
18.	Flight Operations Development Plan Concept - Mature Operations	54
19.	FOT Organization	57

LIST OF TABLES

TABLE	TITLE	PAGE
1.	Summary List of Training Tasks	41
2.	Flight Operations Documentation Development Schedule	43

1 INTRODUCTION

The Earth Observing System (EOS) is an observing system derived from the mission science objectives of "Mission to Planet Earth". The observations are made from instruments on a polar orbiting spacecraft. The initial spacecraft, the EOS AM Spacecraft, will be designed, manufactured, integrated and tested by Martin Marietta. The integrated spacecraft will carry a unique set of instruments. After Integration and Test (I&T), the EOS AM Spacecraft will be shipped to the Western Space and Missile Center (WSMC) where it will be launched using an intermediate class (e.g., Atlas IIAS) launch vehicle and placed into orbit.

1.1 Purpose and Scope

The Flight Operations Management Plan (FOMP) defines the management approach, identifies the organizational structure and interfaces, and provides descriptions of the activities and tasks to be performed and the resources to be allocated to support the development, integration and test, operational readiness verification, and initial operations (orbital verification) of the EOS AM Spacecraft. The EOS AM Spacecraft Flight Operations Program encompasses the following list of activities:

- Flight Operations Development
- Launch and Activation
- Sustaining Engineering
- Mature Operations

The FOMP defines the flight operations tasks to be performed in support of the EOS AM Spacecraft flight operations mission from Contract Start Date (CSD) until the end of the Orbital Verification Period, or 90 days after launch. In addition, there are 3 one-year options to continue the Sustaining Engineering and Mature Operations (Flight Operations Team) activities.

This Flight Operations Management Plan is in accordance with the scope of work defined in Section 5.2, Flight Operations, of the EOS AM Spacecraft Statement of Work (SOW), and the Work Breakdown Structure (WBS) Dictionary section, 31.0, Flight Operations.

1.2 EOS AM Project Organization

The Martin Marietta Astro Space EOS AM Project Organization provides overall management, design, development, manufacturing, integration, verification, support equipment, and initial operations (until 90 days after launch) of the EOS Spacecraft. The organization includes management, business, and technical groups residing in the

Program Management Office (PMO), as well as engineering, financial, manufacturing, and other functions which are matrixed to the PMO. Functional groups residing in the PMO also include: Project Management; Resource and Program Control; Instrument Accommodations; Subcontracts; Equipment Engineering; EOS Studies; and, Systems Engineering and Integration (SE&I). Further details on these functions are found in the Systems Engineering Management Plan (SEP-103). The word "contractor" in this document refers to Martin Marietta Astro Space.

Figure 1 shows the Martin Marietta EOS AM Program organization. Solid lines represent line management relationships, while dotted lines show functional reporting relationships. Figure 2 shows the Systems Engineering and Integration Functional Organization. Flight Operations Engineering performs the "Operations" function under SE&I management.

1.3 EOS AM Spacecraft Flight Operations Organization

The EOS AM Spacecraft Flight Operations Engineering Organization (referred to as simply "Flight Operations Engineering" throughout the remainder of this document unless the entire title is required for clarity) is responsible for the development and implementation of the EOS AM Flight Operations Program, including the planning and staffing of the Flight Operations Team (FOT), planning and operations support of the AM Instrument Set, and the task definition and planning of EOS AM Spacecraft Sustaining Engineering Support. Flight Operations Engineering is also responsible for assuring that operations requirements are considered at each stage of the EOS AM Spacecraft program development process, from Spacecraft development to orbital verification and checkout, and that Spacecraft flight and ground element hardware and software meet their required operational capabilities and interface requirements. Figure 3 shows the Flight Operations Engineering Functional Organization.

1.4 Flight Operations Management Approach

The EOS AM Spacecraft Flight Operations Engineering Team Leader reports directly to the Manager, Systems Engineering and Integration (SE&I). This relationship enables the Team Leader to integrate and evaluate operations requirements with other EOS AM Spacecraft systems engineering technical requirements. This relationship also gives operations a forum for the discussion of operations requirements within the organization responsible for imposing technical control on the Spacecraft design. Through close liaison with the SE&I manager, operations plans and tasks will have the necessary visibility in the EOS AM program internal and external technical reviews, and this will facilitate operations integration planning and assure operations input into the overall Spacecraft development process.

The Flight Operations Team leader consults with the SE&I manager and is

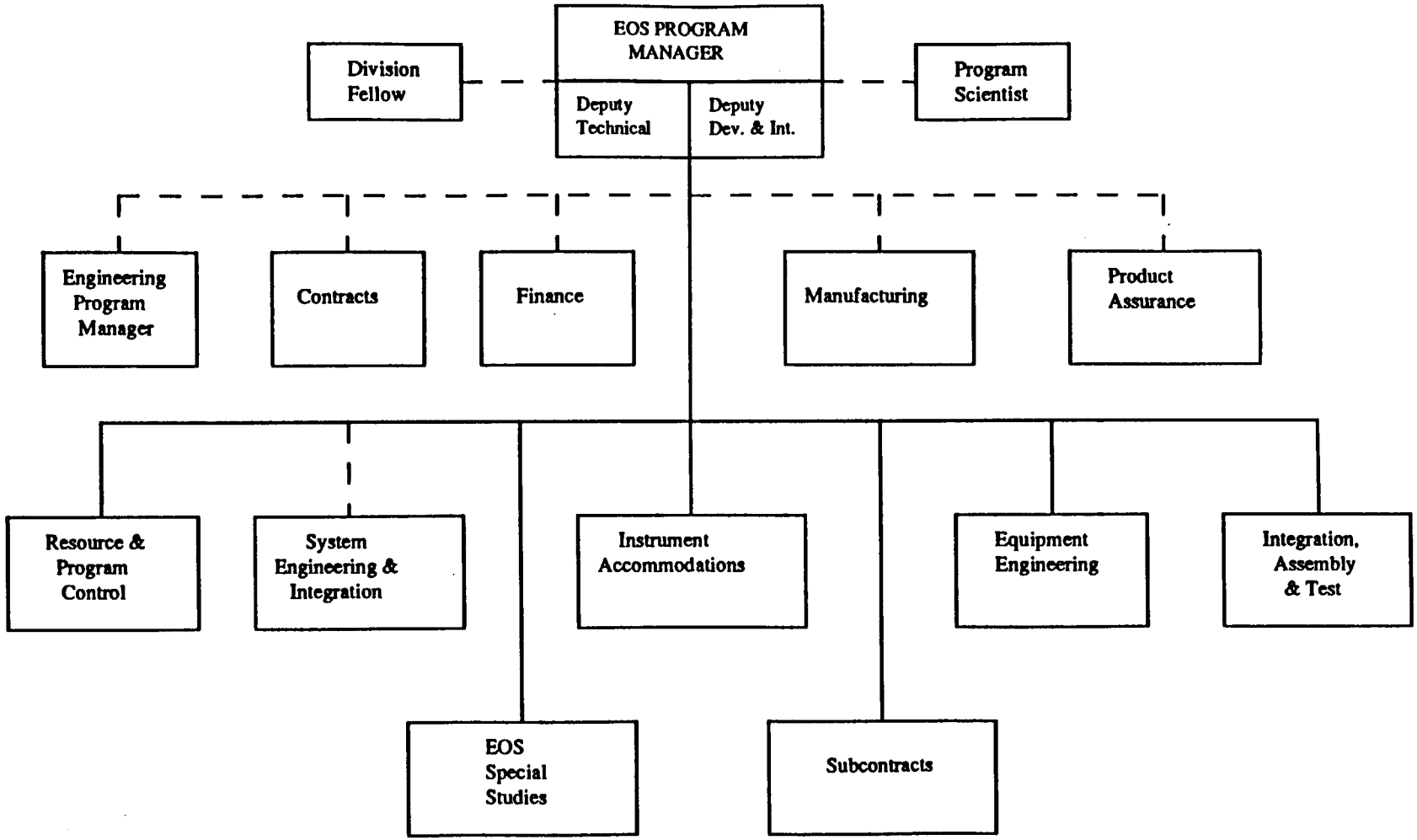

Figure 1. Martin Marietta EOS AM Project Organization

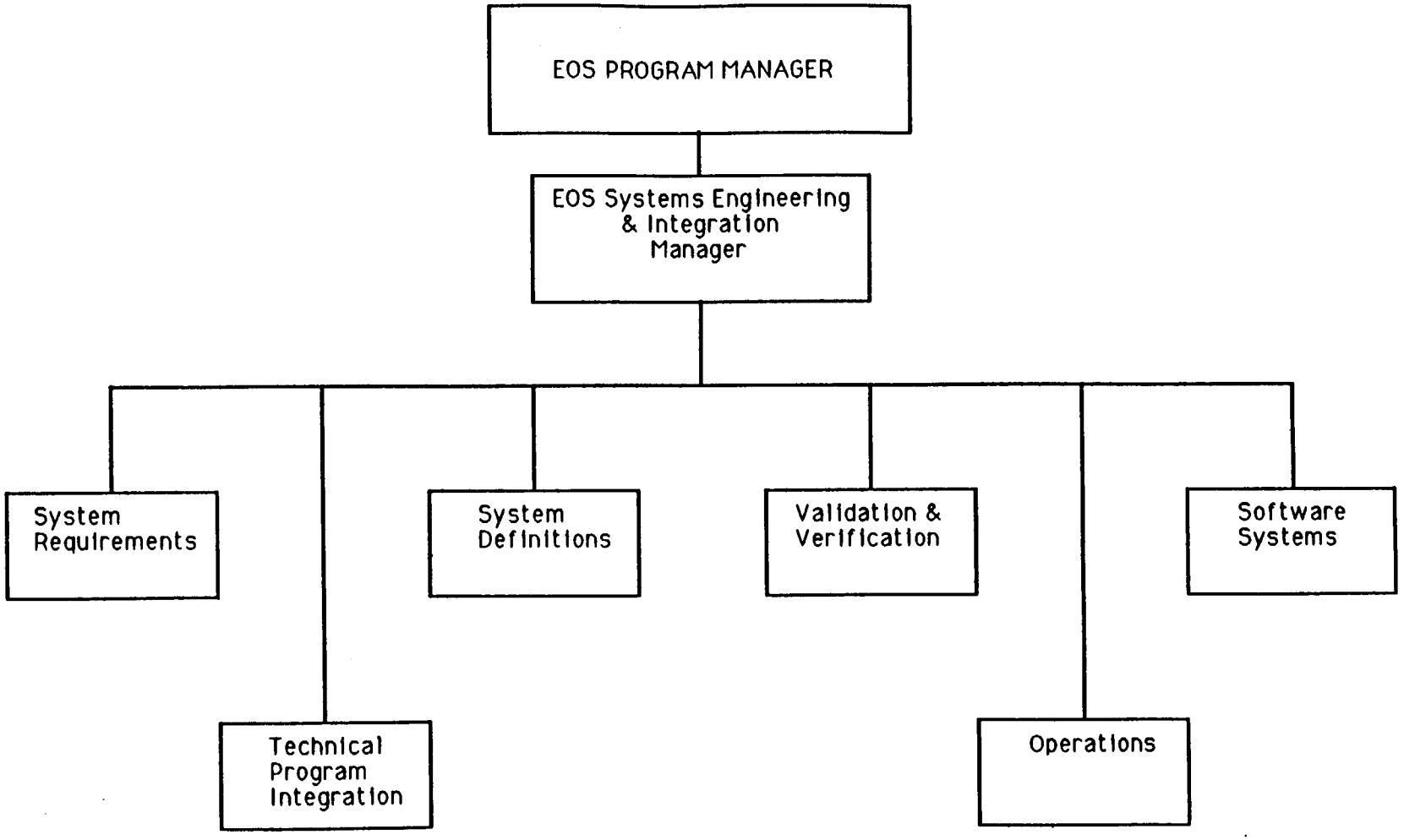

Figure 2. Systems Engineering & Integration Functional Organization

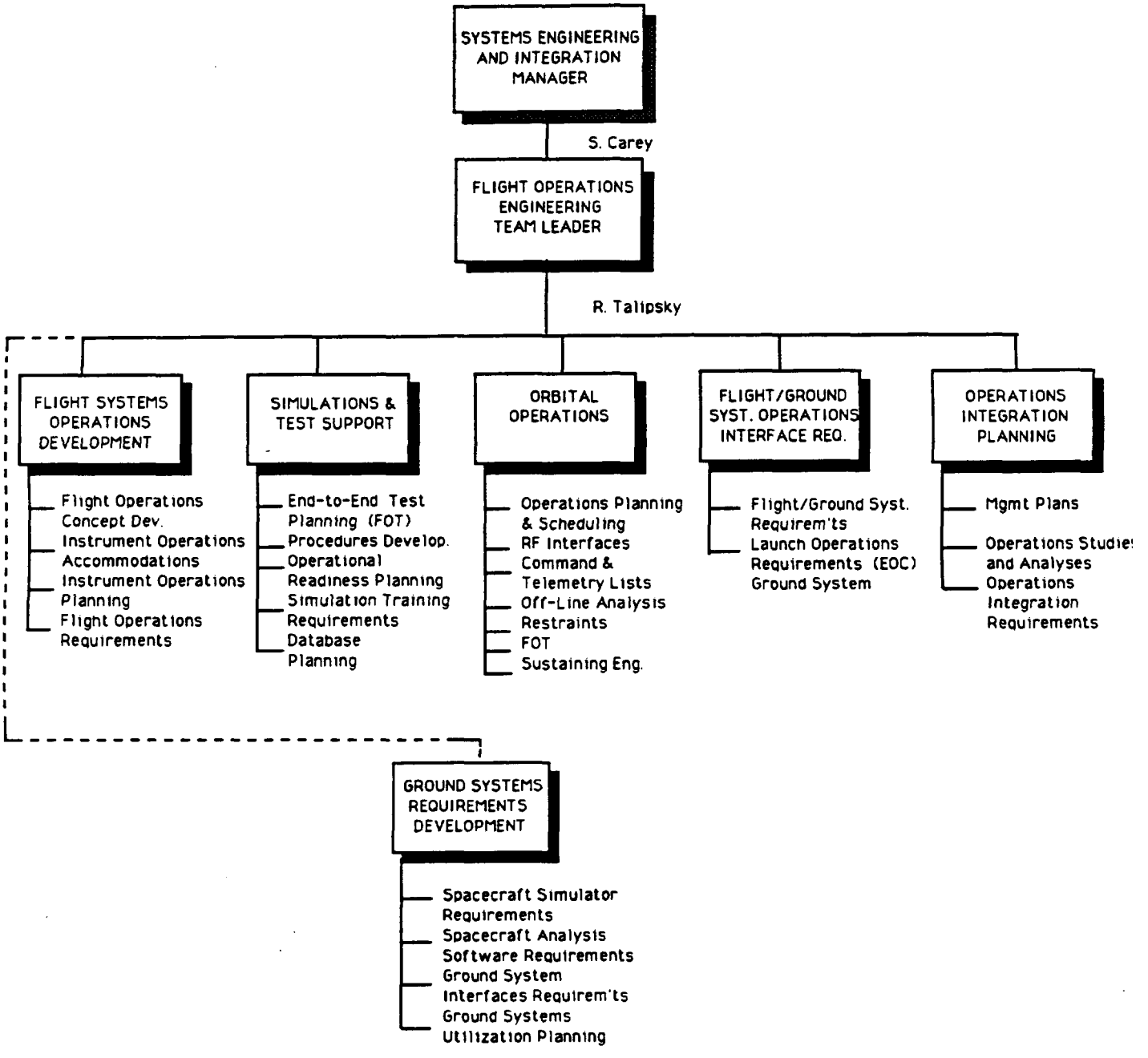

Figure 3. Flight Operations Engineering Functional Organization

responsible for the direction, control, interface coordination, and resource management for the EOS AM Spacecraft Flight Operations Program. This includes all effort necessary to plan, develop, validate, and conduct Spacecraft operations until 90 days after launch. This also includes budgeting, customer interface, scheduling, personnel management, as well as applicable Martin Marietta and EOS program policies and procedures.

Flight Operations Engineering develops plans and establishes schedules to accomplish a variety of operations tasks that are required in the development, integration, testing, and operation of the EOS AM Spacecraft. For the EOS AM program, the operations tasks have been organized under four major activities:

- Flight Operations Development
- Launch and Activation
- Sustaining Engineering
- Mature Operations.

Figure 4 shows how Flight Operations Development overlaps with the Launch and Activation, Sustaining Engineering, and Mature Operations activities.

1.4.1 Flight Operations Activities

The Flight Operations Activities are made up of tasks with specific end results that lead to operational readiness and the launch and orbital activation of the EOS AM Spacecraft. The flight operations activities lead to the development and/or acquisition of systems, equipment, and resources needed to operate and maintain the EOS AM Spacecraft. The information below defines the objectives and scope of the flight operations activities.

1.4.1.1 Flight Operations Activities Concept Definition

The following information provides concept definitions for the flight operations activities:

> The Flight Operations Development Activity begins at CSD and continues until 90 days after launch (task tracking for this document begins with the Operations Re-plan, which was completed in early January, 1993). This Activity defines all the tasks to be performed by the Flight Operations Engineering Organization -- including the development of staffing and training plans for the FOT, the generation of flight operations support requirements for the government provided EOS ground system, and the definition of tasks for the contractor provided Sustaining Engineering Team. Under this activity, Flight Operations Engineering identifies the operations tasks and establishes the objectives for each task.

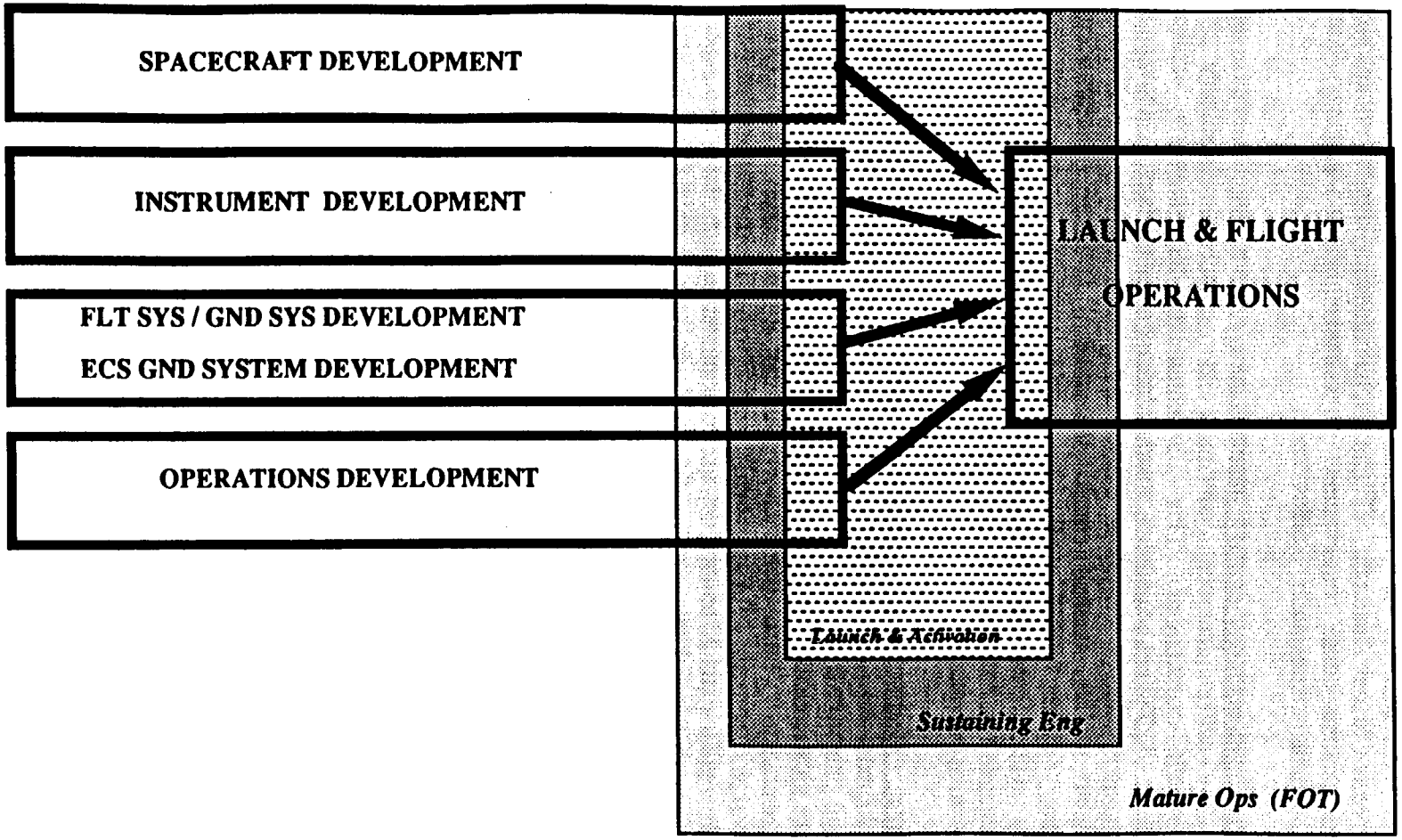

Figure 4. Flight Operations Development Overlap With Other Flight Operations Activities

The Launch and Activation Preparation Activity begins 18 months before launch and focuses on the ground system and launch site readiness preparations, including Spacecraft and ground systems network testing. This Activity encompasses the period of FOT training and the start-up of Sustaining Engineering, as both tasks start one year before launch. Flight Operations Engineering also establishes plans and resources to assure that Launch and Activation tasks meet their objectives.

Sustaining Engineering Activity starts one year before launch and ends 90 days after launch, pending the customer decision on options in the contract. The Sustaining Engineering effort augments the FOT and includes sustaining engineering support of general operations, trouble-shooting on-board problems, coordination with users, and planning. The Sustaining Engineering Team (SET) will be made up of development engineers with specific knowledge and background in the operation and maintenance of specific Spacecraft subsystems hardware and software.

The Mature Operations Activity starts two (2) years before launch and ends 90 days after launch. Mature Operations covers the staffing, preparation for Spacecraft flight operations, and the initial flight operations management by the contractor provided Flight Operations Team (FOT). During this time, the FOT receives both formal (classroom) and hands-on training to develop the skills and knowledge to successfully fly the EOS AM Spacecraft and perform the EOS AM orbital verification and checkout activities.

1.4.1.2 Flight Operations Tasks Identification/Development Concept

The Flight Operations Program task identification process begins with reviews and analyses of EOS AM mission objectives, operations concepts, and Spacecraft design and flight operations requirements. Flight Operations Engineering develops a list of primary operations tasks to be performed to meet flight operations requirements and achieve the mission objectives. These primary tasks are reviewed and compared with tasks developed for previous programs, reviewed and evaluated against EOS AM flight operations requirements, submitted to EOS AM Spacecraft management for review and approval, and incorporated in the Flight Operations Management Plan. The Flight Operations Management Plan (FOMP) document is then submitted to management for review and approval. After approval, the FOMP serves as the baseline for the development and implementation of the flight operations activities. Figure 5 shows the flight operations activities with a representative list of the primary tasks to be performed for each activity.

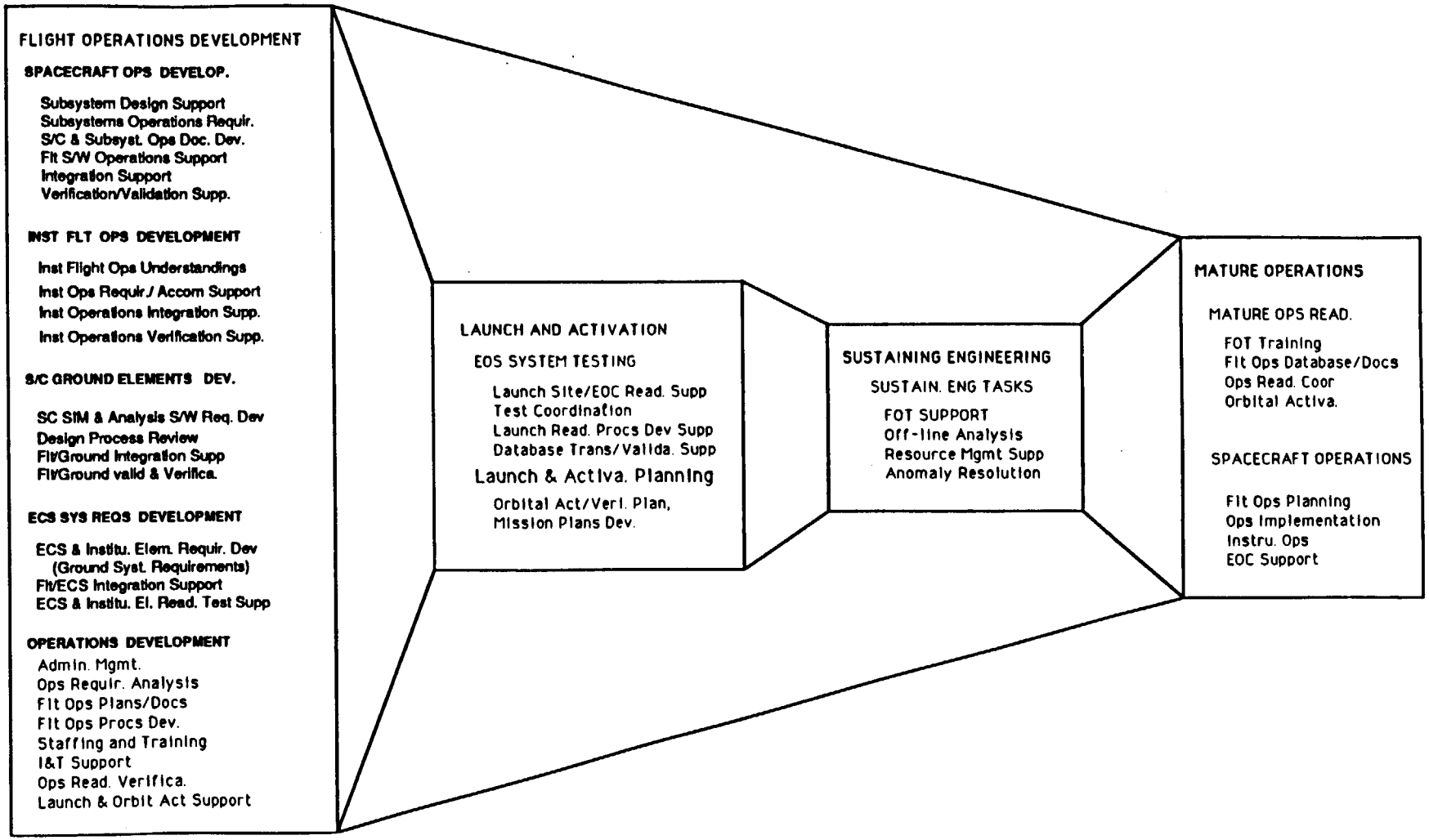

Figure 5. Flight Operations Activities - Representative List of Primary Tasks

The Flight Operations Management Plan also serves as a vehicle for communicating the planned flight operations activities and primary tasks to other EOS AM flight operations elements, and supports overall EOS AM program planning and integration efforts.

1.4.2 Flight Operations Data Management and Communication

Flight Operations Engineering supports various Martin Marietta and GSFC technical interface meetings and electronic data management and communication systems that promote operations planning and the exchange of technical information. Identification of and access to the databases used in support of the EOS AM Spacecraft Flight Operations Program development, test, and integration, is a key development period goal of Flight Operations Engineering. The achievement of this goal will facilitate the document search and retrieval process and provide the kind of efficiencies needed in a large program such as the EOS AM program.

Development period technical documentation and data that have been approved for distribution will be available through the EOS Library at the Contractor's facility. In addition, if the data and documentation are available from the Export Host server at the contractor's facility, it will be accessible via a communications link with the IIS LAN at the contractor's facility.

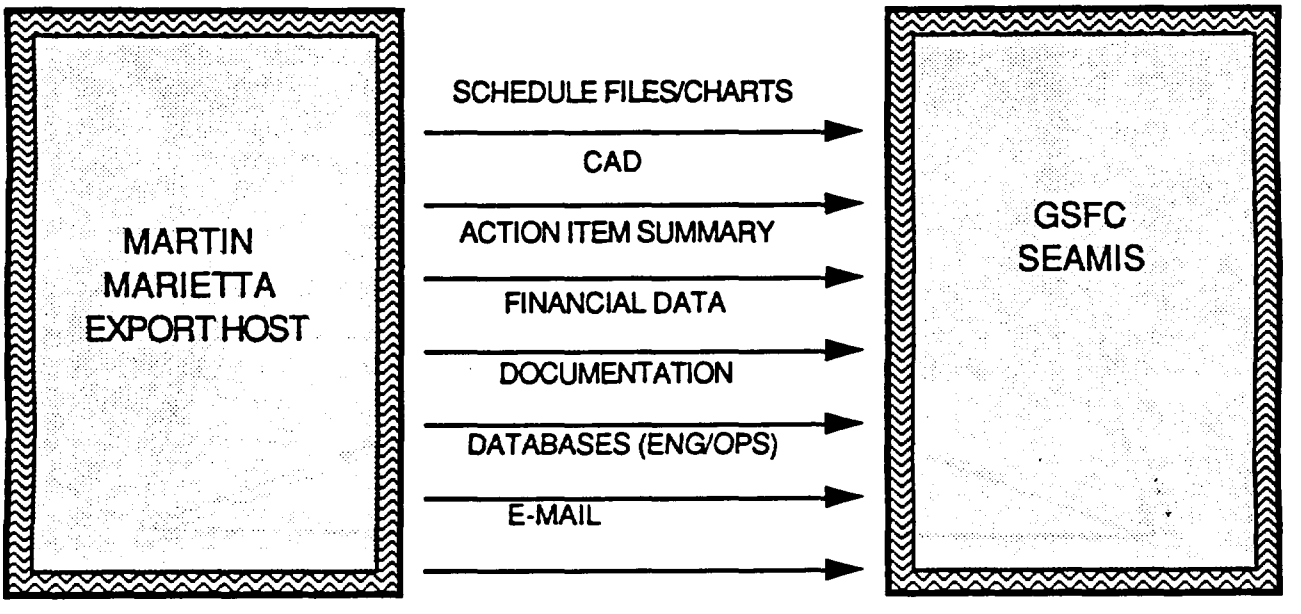

Figure 6. Martin Marietta to GSFC Data Interface (Martin Marietta Export Host to GSFC SEAMIS via PSCN-I and EOSMIS)

At the Goddard Space Flight Center, the Software Environment and Management Information System (SEAMIS) and local network bridging devices enables the SEAMIS to communicate with remote facilities such as the Integrated Information System (IIS) and the Export Host at the contractor's facility that is developed and maintained by the contractor's Software Engineering organization. The SEAMIS network provides for the transport of mail, action items, schedules, documents, and database information. Figure 6 above shows the data interface between Martin Marietta and GSFC as depicted on page 2 in the SEAMIS User's Guide.

1.4.3 Flight Operations Configuration Management

The EOS AM Spacecraft Flight Operations Program will follow the policies and requirements set forth in the EOS AM Spacecraft Configuration Management Plan (MD-104), including the procedures for transferring items under Martin Marietta configuration control to GSFC configuration control. The contractor's Flight Operations Team (FOT) will coordinate configuration control of Spacecraft data in the EOC with GSFC requirements.

1.4.4 Flight Operations Resources Management

Flight Operations Engineering supports all requirements for the maintenance and control of contractor and government property and resources assigned to it.

1.5 Flight Operations Assumptions

The following assumptions are key drivers in the management approach to the EOS AM Spacecraft Flight Operations Program:

- The majority of flight operations procedures will be adapted from I&T procedures and converted to operations procedures with the necessary modifications for operations purposes.

- The Spacecraft I&T procedures will be developed using OASIS; it is assumed that the ground system will also use OASIS.

- Flight Operations will provide the Instrument developers with procedure development formats and provide consultation for the Instrument developers writing procedures; however, the actual writing will be the responsibility of the Instrument developers.

- Ingres is the DBMS selected by the Spacecraft contractor, and a compatible system is assumed for the EOS Operations Center (EOC).

- The Flight Operation Training Program is scheduled to start 1

year prior to launch and all facilities and equipment are expected to be in a readiness state at that time, including the EOC.

- Spacecraft contractor's Flight Operations Team (FOT) phased onboard staffing begins launch minus 2 years, with capability informal training available at the contractor facility.

- Minimal Spacecraft Flight Operations logistics effort (EOC logistics support will be provided by the EOC developer)

- O&M manuals provided by Spacecraft development engineers

2 APPLICABLE DOCUMENTS

2.1 EOS AM Project Documents

421-10-01 30 Oct 1992	Requirements Document for the EOS AM Spacecraft
421-10-02 *14 March 1991*	*Requirements Document for the PAAS and PTTS*
420-05-02 14 May 1992	Performance Assurance Requirements (PAR) for the EOS AM Spacecraft

2.2 Other NASA Documents

STDN 101.2, Rev. 6 September 88	Space Network (SN) User's Guide
(EOSDIS Project) August 30, 1991.	EOSDIS Core System Operations Concept
510-30CD/0191 CSC/TR-91/6005 March 1993	Earth Observing System Data and Information System (EOSDIS) Flight Operations Segment (FOS) Operations Concept (Revision 4)
540-028 GSFC March 1993	Earth Observing System (EOS) Communications (ECOM) Operations Concept Document
560-EDOS-0202.0001 12 December, 1992	EOS Data and Operating System (EDOS) Functional and Performance Requirements
(EOSDIS Project) 1 July 1991	Functional and Performance Requirements Specification For The Earth Observing System data and Information System (EOSDIS) Core System
(GSFC Code 423) 21 August 1991	EOS Ground System Architecture Description Document, appendix B
EOS AM Project Office Goddard Space flight Center, Systems Eng. & Security, Inc. November 30, 1992	SEAMIS User's Guide

2.3 Martin Marietta Program Documents

PS20005396 15 April 1993	Contract End Item (CEI) Specification for the EOS AM Spacecraft (SEP-101)
IS20008501 30 Dec 1992	General Interface Specification (GIS) for the Earth Observing System
EOS-DN-SE&I-010 15 May 1992	EOS Baseline Description Document (BDD)
EOS-DN-EPS-057 8 September 1992	Electrical Power Subsystem Development Plan
EOS-DN-GN&C-043 2 September 1992	EOS AM Spacecraft Navigation System
EOS-DN-S/W-024 23 November 1992	Software Development Facility CDR Support Detailed Design
EOS-DN-GNC-045 13 August 1992	EOS On-orbit Sensor Calibration
20008564 15 May 1992	Systems Engineering Management Plan (SEP-103)
20005387 13 April 1992	Configuration Management Plan (MD-104)
(TBD)	Flight Systems Manual (OPD-1)
(TBD)	Flight System Operations Manual (OPD-2)
(TBD)	Instrument Flight Operations Understanding Document (IFOU)-CERES (OPD-3a)
(TBD)	Instrument Flight Operations Understanding Document (IFOU)- MISR (OPD-3b)
(TBD)	Instrument Flight Operations Understanding Document (IFOU)- MODIS (OPD-3c)
(TBD)	Instrument Flight Operations Understanding Document (IFOU)- MOPITT (OPD-3d)
(TBD)	Instrument Flight Operations OPD-3e)

(TBD)	Flight Systems Plan (OPD-4)
(TBD)	Flight Operations Activities Manual (OPD-5)
(TBD)	Sustaining Engineering Plan (OPD-10)
(TBD)	Database Plan (OPD-11)
(TBD)	Operations and Maintenance Staffing Plan (OPD-12)
(TBD)	Training Plan (OPD-13)
(TBD)	Training Materials (OPD-14)
(TBD)	Operations Readiness Test Plan (OPD-15)
(TBD)	Ground System Requirements (OPD-16)
(TBD)	Command Lists - Database (OPD-17)
(TBD)	Telemetry Lists - Database (OPD-18)
(TBD)	Operations Concept Document (OPD-19)
(OPD-820) (TBS)	Flight Software Maintenance Plan
(SD-111) (TBS)	Flight Software Users Guide
(SD-117) (TBS)	Software Programmers Guide

3 FLIGHT OPERATIONS DEVELOPMENT

3.1 Overview

The Flight Operations Development tasks are based on operations analysis of flight operations requirements, and are closely linked with the development activities and plans for each EOS AM Spacecraft flight operations element (e.g., Spacecraft Subsystems, Instruments, Spacecraft Ground Elements, EOSDIS Elements, and NASA Institutional Elements). These primary tasks are also consistent with the Spacecraft Major Program Events (e.g., Spacecraft PDR, CDR, Spacecraft Integration and Test). Figure 7, Flight Operations Development Plan Concept, provides an overview of the Flight Operations Development Activity and the expected outputs from the flight operations development tasks (all shown as shaded areas on the chart). This concept evolves from a flow down of requirements from the revised Spacecraft SOW and the related Operations Re-Plan (completed in early January, 1993). The concept serves as a tool for showing how the flight operations activities correspond to the overall EOS AM Spacecraft development schedule, and it is used in organizing the information contained in this Flight Operations Management Plan document.

3.1.1 Flight Operations Development Responsibilities

The EOS AM Spacecraft Flight Operations Engineering Organization plans and implements the flight operations development tasks, including the plans for the FOT and Sustaining Engineering staffing. Flight Operations Engineering also provides the necessary support to accomplish the tasks, including the necessary personnel to support the personnel selection process.

3.1.2 Flight Operations Development Approach

Flight Operations development tasks will correspond to the development activities and schedules of the Spacecraft and its flight and ground support elements. These elements are:

- Spacecraft bus
- AM Instrument Set
- Spacecraft ground elements
- EOS Data and Information System (EOSDIS) Core System (ECS)

As these elements progress from the development to the test stage, Flight Operations Engineering personnel will be assigned to track and verify that the developers are providing the information and documentation necessary to satisfy the operations requirements of the elements. This process is implemented through a series of operations tasks established to identify the

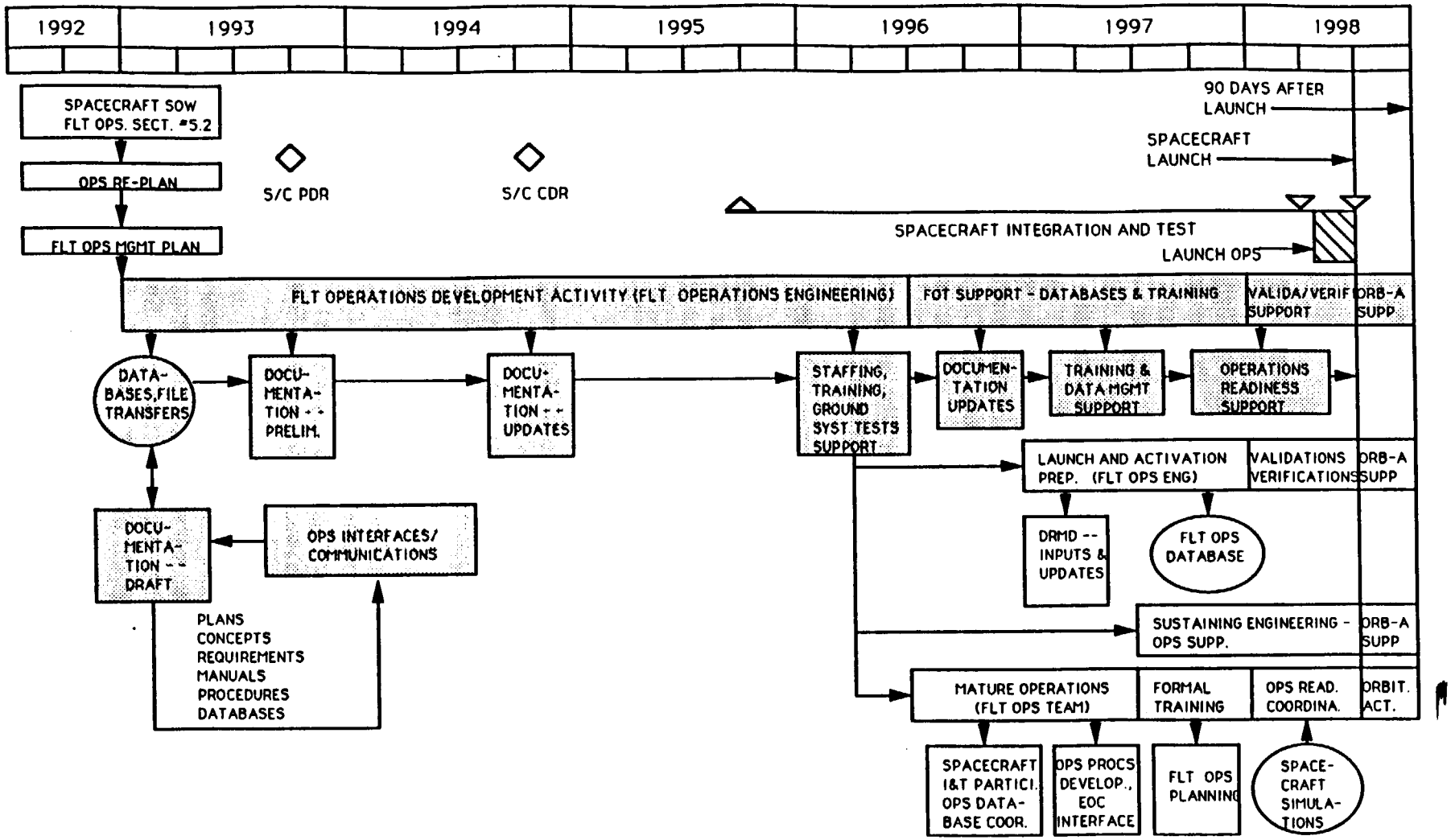

Figure 7. Flight Operations Development Plan Concept

item(s) needed for operation and maintenance of the specific element, or that supports the operation and maintenance of the EOS AM Spacecraft.

In addition, Flight Operations implements plans for the acquisition of information necessary to evaluate the operational requirements, including interface requirements, needed for the operation of the EOS with NASA Institutional elements.

3.1.3 Flight Operations Objectives

The information below describes the Flight Operations Development Activity objectives of Flight Operations Engineering:

a. Integration of EOS AM Spacecraft flight operations requirements with Spacecraft flight and ground elements design and development requirements

b. Technical management of the Spacecraft flight operations requirements implementation

    1. Generate flight operations concepts and requirements.
    2. Develop operations plans and procedures sufficient to enable operations personnel to perform the flight operations tasks.
    3. Participate in EOS program flight and ground elements reviews to assure operations input.
    4. Plan/support the design, development, and implementation of flight and ground operations databases.
    5. Support the development of flight systems elements documentation and provide/support the development of documentation storage and retrieval systems.
    6. Develop the staffing plan and hire and train the Flight Operations Team and support selection of the Sustaining Engineering Team.

c. Ensure that operations requirements are properly reflected in all Spacecraft flight and ground documentation.

d. Coordinate/develop internal and external operations interface requirements, plans, and documentation.

e. Support Integration and Test and operations readiness verification testing.

f. Support launch operations planning, launch readiness testing, and launch/ascent and initial operations activities at the EOC.

3.1.4 Flight Operations Development Tasks

The Flight Operations Development Tasks include participating in design reviews, collecting and analyzing data, evaluating Spacecraft operating modes and constraints, and providing resources and planning to develop launch and activation, sustaining engineering, and mature operation schedules and other required documentation.

The primary objective is to define, develop, store, and communicate operations related information during the element/system development process so as to maximize operations planning and operations integration/implementation capabilities. The Flight Operations Development Tasks support each stage of the development process: design and development, integration and test, and operational readiness review and planning -- in preparation for Launch and Activation.

The Flight Operations Development Tasks are organized under the following categories:

1. Spacecraft Development
2. Instrument Operations Development
3. Spacecraft Ground Elements Development
4. ECS Ground System Requirements/Development (S/C to ECS Requirements)
5. Operations Development.

The Flight Operations Development Tasks are performed by Flight Operations Engineering, with support from the Spacecraft development engineers, the instrument developers, and the ground elements developers. The number of subtasks and the objectives of the tasks are evaluated and used as a baseline for estimating the level and types of resources required to perform the primary task.

3.2 Spacecraft Development

3.2.1 Overview

This section identifies the tasks under Spacecraft Development that are to be performed by operations during the Spacecraft subsystems development period. These tasks include reviewing design documentation and making comments as needed, and developing sufficient knowledge about the subsystems to facilitate Spacecraft flight operations planning, and lead to a smooth transition from development through Spacecraft Integration and Test. In order to accomplish these tasks, Flight Operations Engineering interfaces with the Spacecraft subsystems development engineers (Hardware and Software), and Integration and Test (I&T) and Configuration Management (i.e., for documentation control/maintenance issues).

3.2.2 Spacecraft Subsystems and Flight Software Approach/Objectives

The primary objectives of Flight Operations Engineering for acquiring data on the Spacecraft subsystems and software are as follows:

a. Develop sufficient understanding of the Spacecraft subsystems and/or software operating concepts and design/development requirements and evaluate those requirements against flight operations requirements to determine if they are compatible
b. Identify the Spacecraft development systems, support equipment, documentation, technical instructor personnel, and procedures (to be converted for operations use), required to support simulations and training for orbital operations.

These objectives are achieved through Flight Operations Engineering participation in subsystem and software design/development reviews, by reviewing subsystem and software design/development documentation, and by assisting in planning and scheduling of deliverables to the EOC.

3.2.3 Operations Responsibilities

Flight Operations Engineering is responsible for reviewing Spacecraft subsystems requirements in terms of operations requirements that include the safe and efficient operation of the Spacecraft. Flight Operations Engineering is also responsible for reviewing and commenting on Spacecraft subsystem design documentation, collecting and maintaining information to be used in to support flight operations implementation. and supporting Spacecraft subsystems integration, test, and verification activities.

3.2.4 Spacecraft Operations Documentation

Flight Operations Engineering develops the following documentation during Spacecraft development: the Flight System Manual (OPD-1); and, the Flight System Operations Manual (OPD-2). The Flight System Manual provides details on the Spacecraft subsystems. This document is based on the Baseline Description Document (BDD), DSN-SE&I-010. The Flight System Operations Manual provides details on the flight subsystems operating modes and constraints, on-board telemetry data flow, ground command and control elements, parameters, interfaces, and operations and maintenance specifications.

3.2.4.1 Spacecraft Technical Documentation

Flight Operations Engineering reviews and comments on Spacecraft subsystems specifications, design notes, functional and performance test procedures, and O&M manuals. Flight Operations Engineering also defines and adapts Spacecraft technical documentation, and materials for use in the Flight Operations Training Program.

The Spacecraft subsystem engineers are responsible for developing certain hardware, software and systems documentation such as test procedures and user manuals for systems and equipment where they have design/development responsibility. The following Documents are to be developed by Software Engineering for operations support: Software Maintenance Plan (OPD-820); Flight Software Users Manual (SD-111); and the Flight Software Operations manual (SD-117).

3.2.4.2 Documentation Configuration Management

Documentation developed for Spacecraft operations support is placed under configuration control and any changes or updates are made in accordance to the rules and policies defined in the EOS AM Spacecraft Configuration Management Plan. All Flight Operations documents noted in the FOMP will be maintained under configuration control once they have been formally baselined.

3.2.5 Spacecraft Integration Planning

Spacecraft integration and test begins in the fourth quarter of 1995, about 33 months before launch. Flight Operations Engineering supports Spacecraft subsystems integration planning and the development of interface requirements. The Spacecraft interfaces define the EOS elements for which operations information is to be developed and communicated as they provide for the necessary prelaunch and launch activities communication with the ground. The external interfaces are controlled with Interface Control Documents (ICDs) and other applicable specifications.

Flight Operations Engineering will participate in test efforts on two levels:

1. Internal Level

   Reviewing, identifying, and incorporating test plans and schedules into operations planning; interfacing with Spacecraft and Instrument development personnel; and, assigning operations personnel (FOT) to test activities as part of the operations training /development test procedures familiarization process

2. External

   Developing operational readiness plans and strategies to accommodate Spacecraft flight and ground system integration testing; coordinating schedules; database population; and planning/providing resources support (incl. FOT)

Flight Operations Engineering assigns flight operations personnel to observe/participate in all Spacecraft-level tests as soon as they are able to demonstrate sufficient understanding of the program and knowledge about the Spacecraft. This is part of the training given to FOT personnel, and it enables them to get close-up, hands-on experience with Spacecraft components early in the program.

3.2.6 Spacecraft Subsystem Verification Planning

The EOS Spacecraft verification and testing process is specified in the Spacecraft Verification Plan (VRD-100), Verification Specification (VRD-110), and Comprehensive Test Plan (VRD-105).

Flight Operations Engineering supports subsystems verification test planning by participating in test scenario development and the verification test process. Specific tasks include reviewing the test procedures, and observing the manner in which the tests are conducted. These tasks enable Flight Operations Engineering personnel to become familiar with the test procedures and methods, which they pass on to the FOT.

3.2.7 Spacecraft Elements Operations Products/Summary

For Spacecraft Subsystems and Flight Software Operations, Flight Operations Engineering is responsible for the following items:

- Flight Systems Manual
- Flight Systems Operations Manual

3.3 Instrument Operations

3.3.1 Overview

The EOS AM Spacecraft Bus provides the platform from which the instruments make their observations, and the bus provides the environment and services necessary to sustain instrument operability. The AM Instrument Set is comprised of: the Advanced Spaceborne Thermal Emission and Reflection Radiometer (ASTER); the Clouds and Earth's Radiant Energy System (CERES); the Multi-Angle Imaging Spectro-Radiometer (MISR); the Moderate-Resolution Imaging Spectrometer (MODIS); and, the Measurement of Pollution in the Troposphere (MOPITT).

The paragraphs below describe the tasks to be performed in support of the AM Instruments.

3.3.2 Instrument Operations Development Responsibilities

Flight Operations Engineering is responsible for establishing interfaces with the Instrument developers, assisting the Instrument developers in defining operations requirements, and participating in Instrument design reviews. Flight Operations Engineering is also responsible for supporting the Instrument developers in the generation of instrument operating procedures. Flight Operations Engineering assists the instrument developers in determining what operational procedures are needed, and the formats and guidelines to be followed in producing the procedures.

3.3.3 Instrument Operations Requirements Approach/Objectives

Flight Operations Engineering participates in Instrument Design Reviews and comments on instrument design documentation to develop insight into instrument requirements during the instrument development phase. Flight Operations Engineering also participates in interface meetings at GSFC to facilitate instrument operation requirements communication, and interfaces with the Martin Marietta Instrument Accommodations Group to identify Instrument interface requirements that impact upon operations. Major operations objectives with respect to the EOS AM Instrument Set are:

- Use the Instrument Flight Operations Understanding (IFOU) document to facilitate agreements and understanding between Flight Operations Engineering, the EOS AM community, and the Instrument developers on instrument operations plans
- Assign Flight Operations Engineering personnel to participate in Instrument meetings and design reviews at the contractor's facility and at GSFC to assure operations input in the Instrument planning and development process.

3.3.4 Instrument Operations Documentation

Flight Operations Engineering prepares an Instrument Flight Operations Understanding (IFOU) document for each instrument. The objectives of the IFOU are to facilitate instrument operations planning and to generate an understanding between the EOS AM Spacecraft community and each Instrument Developer/Instrument Development Team regarding flight operations plans and requirements for their instrument. The IFOU document is used to ensure that the needs of the instrument are properly reflected in other documentation as well. The IFOU is also used by the FOT and EOC support personnel in defining prelaunch preparation efforts and in verifying operational readiness prior to launch. Requirements for specific types of operational support are defined and implemented consistent with the IFOU. Figure 8 shows the IFOU development concept and Figure 9 shows the IFOU development schedule.

3.3.5 Instrument Integration Planning

Flight Operations Engineering, along with Flight Operations Team (FOT) personnel (as soon as they are on board with requisite skills) participate in Spacecraft integration activities with the Instruments. These operations personnel also participate in Instrument reviews, provide comments on instrument operations documentation, and plan and manage the integration of instrument documentation with other flight operations documentation.

3.3.6 Instrument Verification Planning

Flight Operations Engineering participates in the Instrument verification activities conducted at the contractor's facility.

3.3.7 Instrument Operations Products/Summary

The 5 IFOUs are the primary output from operations in regard to the Instruments; however, Flight Operations Engineering levies FOT instrument training requirements on the Instrument Developers formally via the DMRD and the Flight Operations Training Plan, and informally at Instrument interface meetings. Flight Operations Engineering also provides training to Instrument personnel as part of the Flight Operations Training Program. The 5 IFOUs are:

- OPD-3a = CERES
- OPD-3b = MISR
- OPD-3c = MOPITT
- OPD-3d = MODIS
- OPD-3e = ASTER

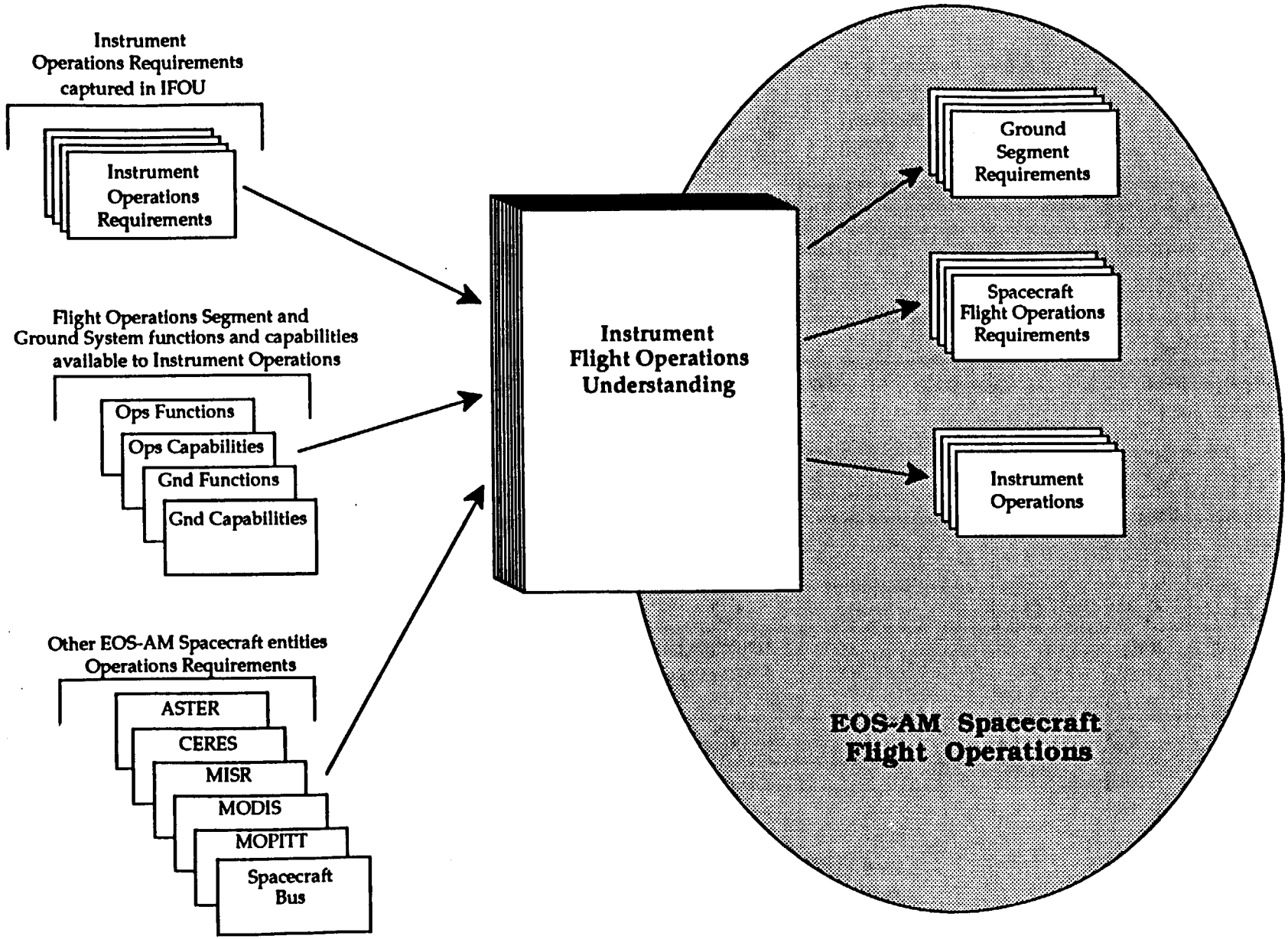

FIGURE 8 IFOU DOCUMENT CONCEPT

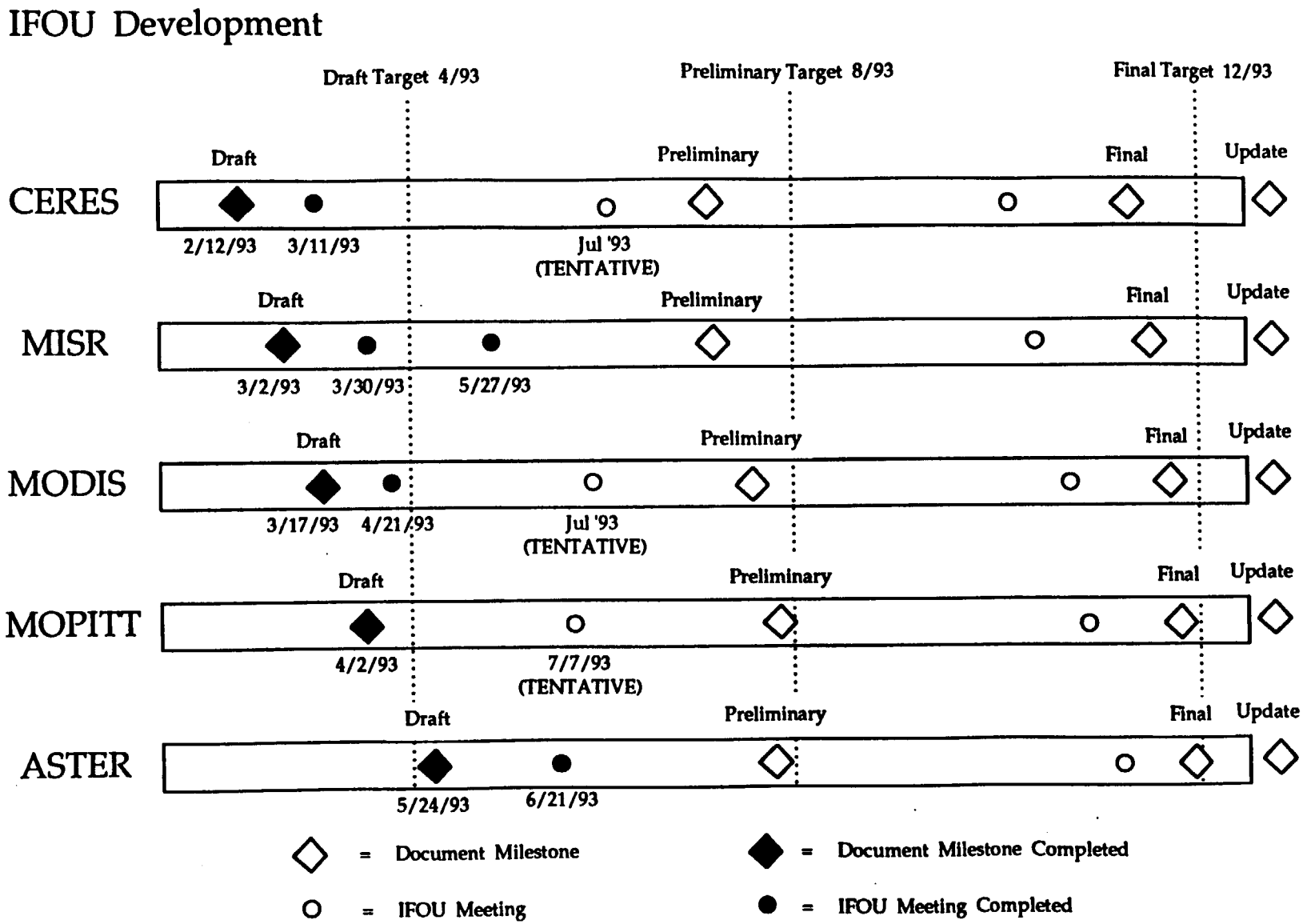

FIGURE 9 IFOU DEVELOPMENT SCHEDULE

3.4 Spacecraft Ground Elements

3.4.1 Overview

The Spacecraft ground elements consist of: *the Spacecraft Analysis Software (SAS);* the Spacecraft Simulator (SSIM); the Software Development Facility (SDF); and, the Integrated Information System (IIS). *The SAS is a set of software-based analysis tools and data to be used for support of analysis and anomaly resolution;* the SSIM is provided by the Spacecraft developer to support testing of flight software loads and databases, verification of operational procedures, training of Spacecraft operators, and anomaly resolution support; the SDF provides software maintenance support; and, the IIS supports electronic data communications and data exchange between GSFC and the GE facility.

3.4.2 Spacecraft Ground Elements Approach/Objectives

Flight Operations Engineering establishes staffing, facilities, training and resources planning and implementation requirements for the Spacecraft Ground Elements. One of the Flight Operations Engineering goals is to identify the ground elements development test activities and plan FOT tasks to be performed to support the test activities, with the overall objective being to familiarize the FOT with types of tools and procedures they will need to be familiar with to support Spacecraft flight operations. Also, Flight Operations Engineering and the FOT will be responsible for developing simulation requirements for flight operations training, system validation, and flight readiness of both systems and personnel.

Flight Operations Engineering also identifies and supports the establishment of Sustaining Engineering and other types of support (e.g., communications) required by the Spacecraft ground elements in the EOC.

3.4.3 Spacecraft Analysis Software (SAS)

Currently, the status of the SAS is TBD.

3.4.4 Spacecraft Simulator (SSIM)

Currently, the status of the SSIM is TBD.

3.4.5 Software Development Facility (SDF)

The Software Development Facility supports the design, development, maintenance, and management of the flight and ground software for the EOS AM Spacecraft. The SDF has overall responsibility for flight software maintenance, and supports the sustaining engineering activity. Figure 10 provides an architectural overview of the SDF system network including router, servers, workstations, Program Support Communications Network

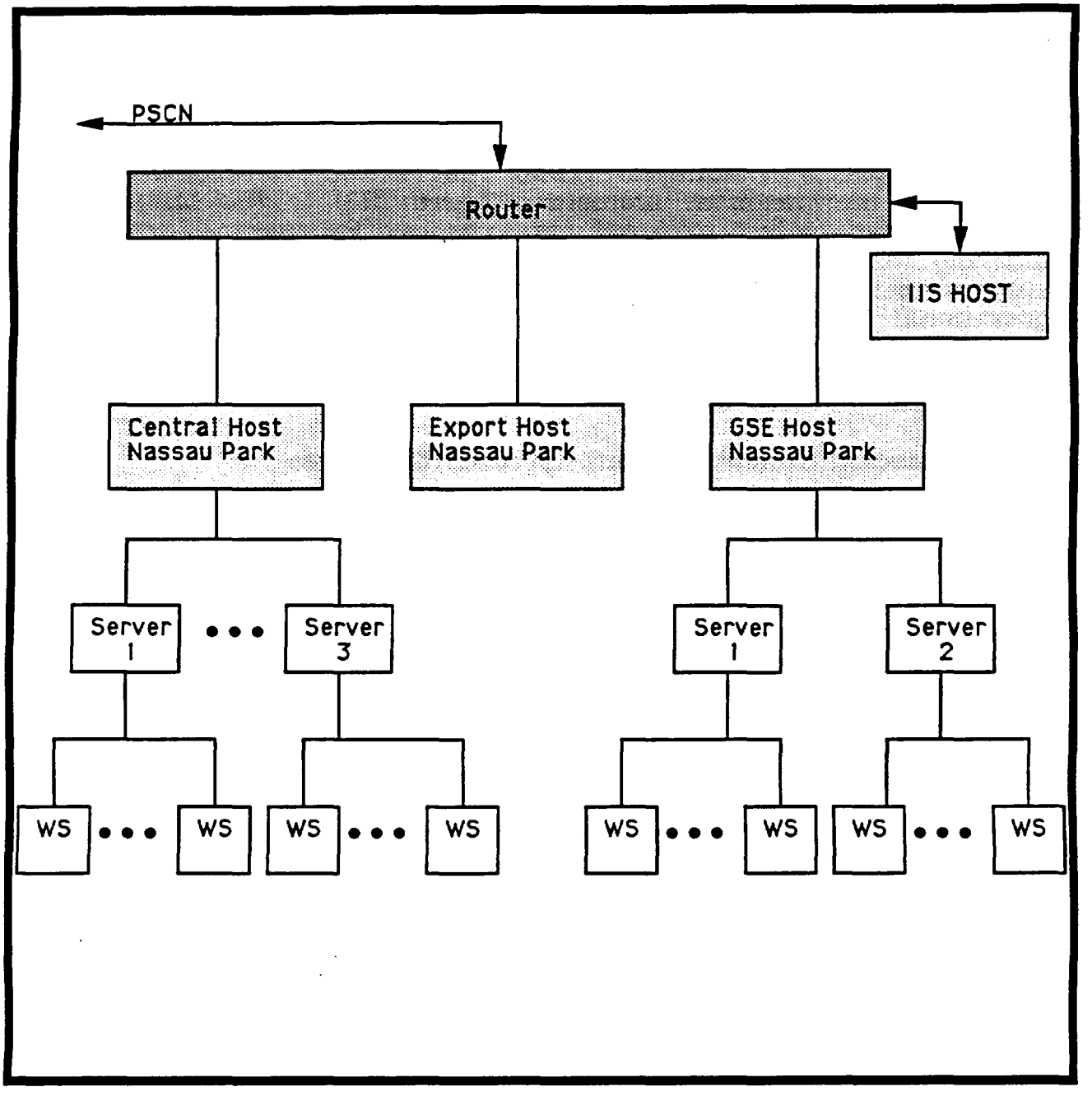

Figure 10. SDF Architectural Overview

(PSCN) access, and the Integrated Information System (IIS) system connection.

The FOT, with support form Sustaining Engineering, requires information and training on the SDF interface with the EOC, and the roles the SDF plays in Spacecraft software maintenance.

3.4.6 Spacecraft Ground Elements Integration Planning

Flight Operations Engineering assigns personnel to support Spacecraft ground elements integration planning with the GSFC EOS AM Project operations organization, and the EOS AM ECS ground systems development organizations as required. The Spacecraft ground elements integration requirements will be included with the EOS AM Spacecraft operations requirements to be documented in the DMRD by the Spacecraft contractor and in appropriate ICDs.

3.5. ECS Elements Functions/Spacecraft Operation Requirements

3.5.1 Overview

The EOSDIS Core System (ECS) Flight Operations Segment (FOS) provides the primary ground system interface for EOS AM Spacecraft flight operations. The FOS consists of the EOS Operations Center (EOC), the Instrument Control Center(s) ICC(s), and the Instrument Support Terminals (ISTs). The FOS receives communications and data transfer support form 2 stand alone elements, the EOS Data and Operations System (EDOS), and the EOS Communication Network (ECOM). All FOS elements and the two stand alone elements are involved in flight operations.

GSFC provides the ECS ground system and provides the operational support (e.g., logistics, maintenance) for the ground system to support flight and ground system validations/verification activities and flight operations activities.

3.5.2 EOC Facility Role

The ECS FOS EOS Operations Center (EOC) element provides the facilities and ground systems equipment necessary for the FOT to perform Spacecraft operations planning and control and to conduct real-time operations. Details on the systems architecture and physical configuration of the EOC are TBD.

3.5.3 Flight Operations Ground System Requirements

Flight Operations Engineering defines the Spacecraft flight operational support requirements for the EOC and communicates those requirements to the ECS developer via the Ground Systems Requirement Database at the contractor's facility and the Detailed Mission Requirement Document (DMRD). This database may be accessed from GSFC through a SEAMIS link to the IIS (or by obtaining a hardcopy of database called the Ground Systems Requirements Document, OPD-16). The database will contain flight system to ECS ground system interface requirements, including NASA Institutional elements requirements, and the EOS Data Operations System (EDOS) and the EOS Communications Network (ECOM). The Spacecraft flight operations requirements upon the ground system will levyed upon the ground system elements via the GSFC Detailed Mission Requirements Document (DMRD). Flight operations requirements in the DMRD will include data processing and communication, flight and ground system operating parameters, and facilities, training, and logistics support.

The ECS provides for the maintenance of the EOC ground systems equipment and also provides the necessary logistics support such as facilities and supplies for all EOC activities in support of flight operations.

There are two ECS stand-along elements associated with the FOS and because of their unique roles in flight operations, a brief description is provided below. They will also have a part in the training program, with lessons on each element and their role in EOS data communications.

3.5.4 EOS Data and Operations System

EDOS provides data conversion services between the EOS ground system -- that is, the EOS Operations Center (EOC) for flight operations -- and the Tracking Data Relay Satellite System (TDRSS). EDOS processes return-link telemetry data (removing communication artifacts) and provides packets and data sets to the EOC and other EOS ground elements. Information on the operations role and types of services to be provided by EDOS for EOS AM flight operations are provided in the EDOS Functional and Performance Requirements document (EOS 03568, 560-EDOS-0202.0001).

3.5.5 EOS Communication Network

ECOM provides the set of circuits, switching, and terminal facilities for operational telecommunications support specific to the EOS project, including the data transport path from the EDOS to the EOC. Information on ECOM services is provided in the ECOM Operations Concept document (540-028).

3.5.6 ECS Elements Operations Approach/Objectives

The primary goal for flight operations with respect to the ECS elements is to assure early and on-going communication of an integrated planning and communications effort. The overall objectives is to assure that schedules and resources to support operations integration are complimentary.

3.5.7 ECS Elements Operations Integration Planning

Flight Operations Engineering provides planning and scheduling support, as required, for the implementation of ECS elements and flight operations elements integration activities.

3.5.8 ECS Elements Operations Readiness Verification

The FOT coordinates the flight operations readiness verification activities with the ECS elements required to support flight operations.

3.6 NASA Institutional Elements

3.6.1 Overview

The NASA Institutional Elements that support flight operations include the Space Network (SN); the Flight Dynamics Facility (FDF); the NASA Communications Network (NASCOM); the Deep Space Network (DSN); Ground Network (GN); Wallops Flight Facility (WFF); and the Program Support Communications Network (PSCN). Details on the types of services and location of these elements is provided in the Operations Concept Document (OPD-TBD).

The NASA Institutional elements and their missions in regard to flight operations will be covered in considerable detail in the Flight Operations Engineering Training Program, with particular emphasis on the unique mission and operating features of these elements.

3.6.2 NASA Institutional Elements Operations Approach/Objectives

Flight Operations Engineering establishes interfaces and communicates with the NASA Institutional Elements on documentation and procedures defining the policies, rules, and standards to be applied when using the services of these elements. Spacecraft support requirements on these elements are provided in the Ground Systems Requirements Document, (OPD-16).

Flight Operations Engineering also obtains all necessary data and information on the NASA Institutional Elements to support the flight operations training program. The FOT establishes the necessary interfaces to support flight operations readiness testing and operations planning tasks.

3.7 Operations Development

3.7.1 Overview

This task provides for all the tracking, collecting, developing, organizing, integrating, and managing the data and resources required to transition from flight operations development to launch and activation. The Operations Development task also covers the development and implementation of operations plans, including those for staffing the FOT and establishing the operations databases.

3.7.2 Operations Management

Flight Operations Engineering is responsible for overall management of the Flight Operations program, including budgeting, staffing, resource management and administrative support efforts. Flight Operations Engineering communicates this information other EOS AM Spacecraft flight and ground elements through EOS program reviews, technical interface meetings, and subsystems status reviews.

3.7.3 Operations Planning

Flight Operations Engineering develops flight operations schemes to define and allocate functional responsibilities and interactions among the various flight operations elements. The EOS AM Flight Operations Activities Manual (OPD-5) defines the major facilities, their functions, and how they interact in accomplishing their functions. The Operations Activities Manual describes the operations tasks and the planning required to satisfactorily perform the EOS AM Spacecraft flight operations mission. Development of a mission reference model will be used to identify and plan mission operations support tasks, including all aspects of initial planning under AM contractor responsibility.

Flight Operations Engineering conducts studies and analyses to define operational interrelationships, flight segment resources requirements, and establish operations schedules. The studies are also used to define flight operations ground segment resource requirements.

3.7.4 Operations Procedures Development

Flight Operations Engineering and the FOT develop/support the generation of operations procedures. The operations procedures are derived primarily from the test procedures developed by I&T with support from the Spacecraft subsystem engineers. The FOT is responsible for the final development and validation of the operations procedures, most of which have been converted from I&T procedures. The FOT reviews all procedures for compatibility with flight operations such as procedure duration and

logical break points and performs the necessary editing, with help from I&T as needed.

Flight operations procedures include: nominal operations procedures, contingency operations procedures, launch operations procedures, activation operations procedures, activation contingency operations procedures, and special operations procedures. In addition, the FOT develops operations unique procedures for tasks such as configuring the TDRSS ground elements. Figures 11, 12, and 13 show the Spacecraft Operations Procedure Development concept.

Flight Operations Engineering participates in the effort to identify and edit the I&T test procedures that will be converted to operations procedures. This includes working with I&T and Spacecraft subsystem personnel, to develop a thorough understanding of the test and the relative importance of each step in the test process, and in obtaining clarifications on the procedures as needed.

3.7.5 Performance Analysis Planning

Flight Operations Engineering supports the development of plans to monitor and analyze Spacecraft and Instruments performance. This includes plans for monitoring Spacecraft operation and subsystems performance and performing post-flight analysis. The FOT interfaces with the Flight Dynamics Facility (FDF) for reference data, which is also available to the instrument developers. Details on Performance Analysis Planning is provided in the Operations Activities Manual, OPD-5.

3.7.6 Database Plan

The Flight Operations Engineering approach to database development is provided in the Database Plan (OPD-11). The Database Plan describes how the Ground System Database will be developed, verified, and maintained for support of flight and ground system operations. The flight operations ground system database plan is developed with support from Integration and Test (I&T). The flight operations ground system database will contain information such as telemetry formats, calibration curves, display formats, and automated operations procedures. The flight operations objective is to generate all the Spacecraft commands from a database, including Instrument commands. This will require extensive coordination and communication on formats and data; however, the end product will reduce the command verification process while maintaining the capability for Instrument operators to control their instrument. Details on the plans for developing the Ground System Database will be provided in the Database Plan. Figure 14 shows a conceptual view of the Managed Command Master Database. Under this concept, all commands and telemetry data and parameters will reside in a master database.

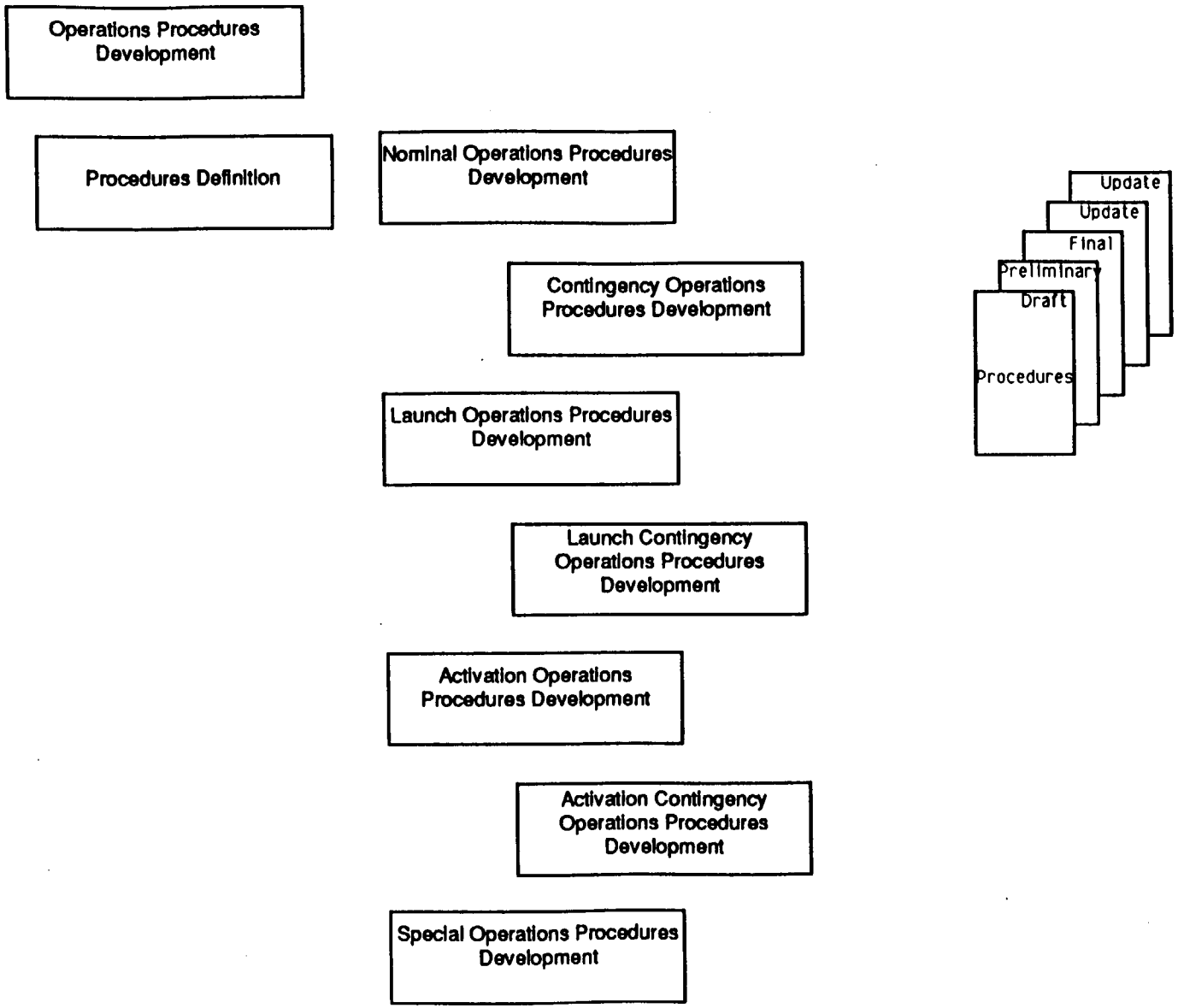

Figure 11. Operations Procedures Development Concept - General

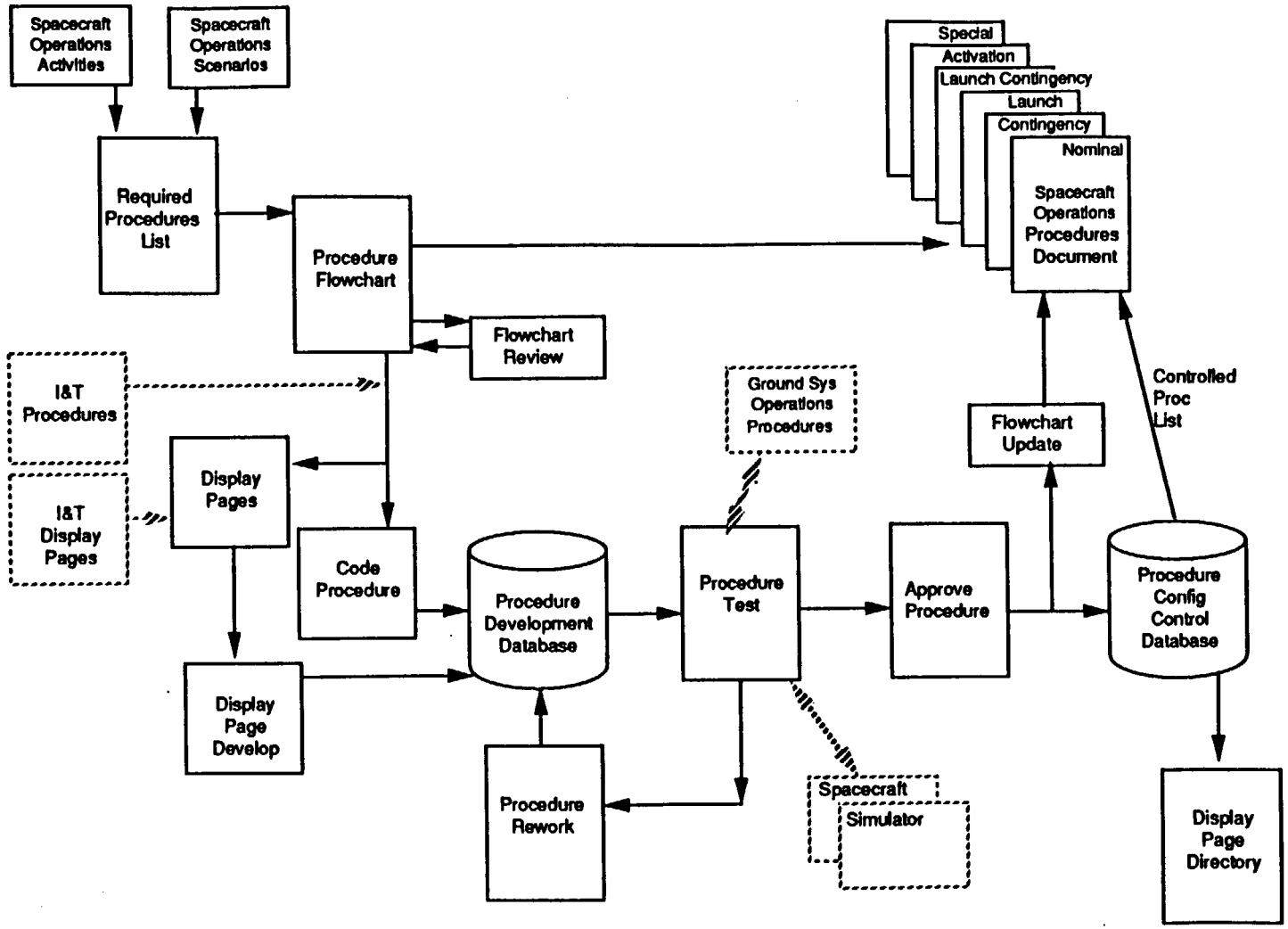

Figure 12. Operations Procedure Development Concept - Spacecraft

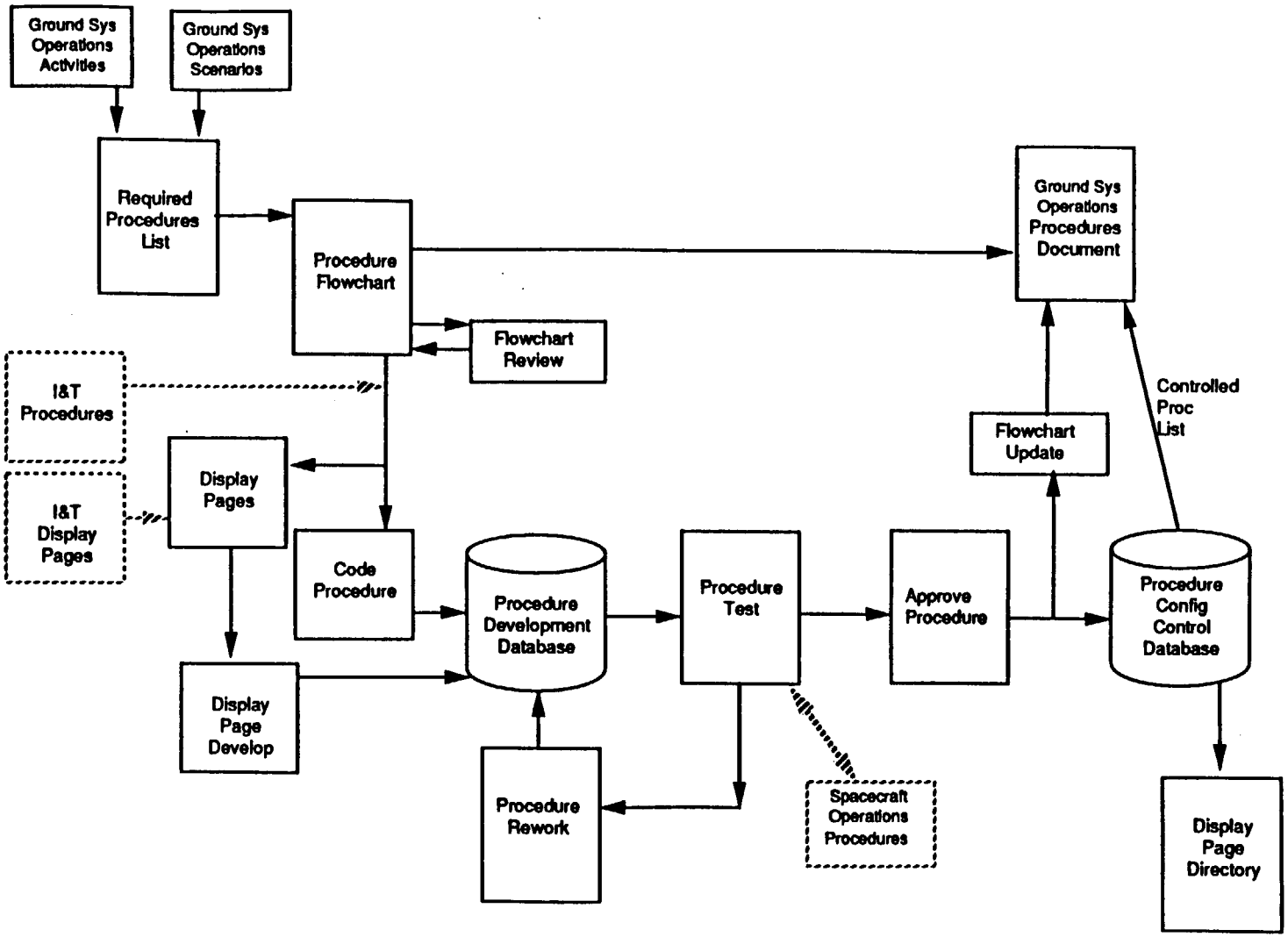

Figure 13. Operations Procedure Development Concept - Ground System

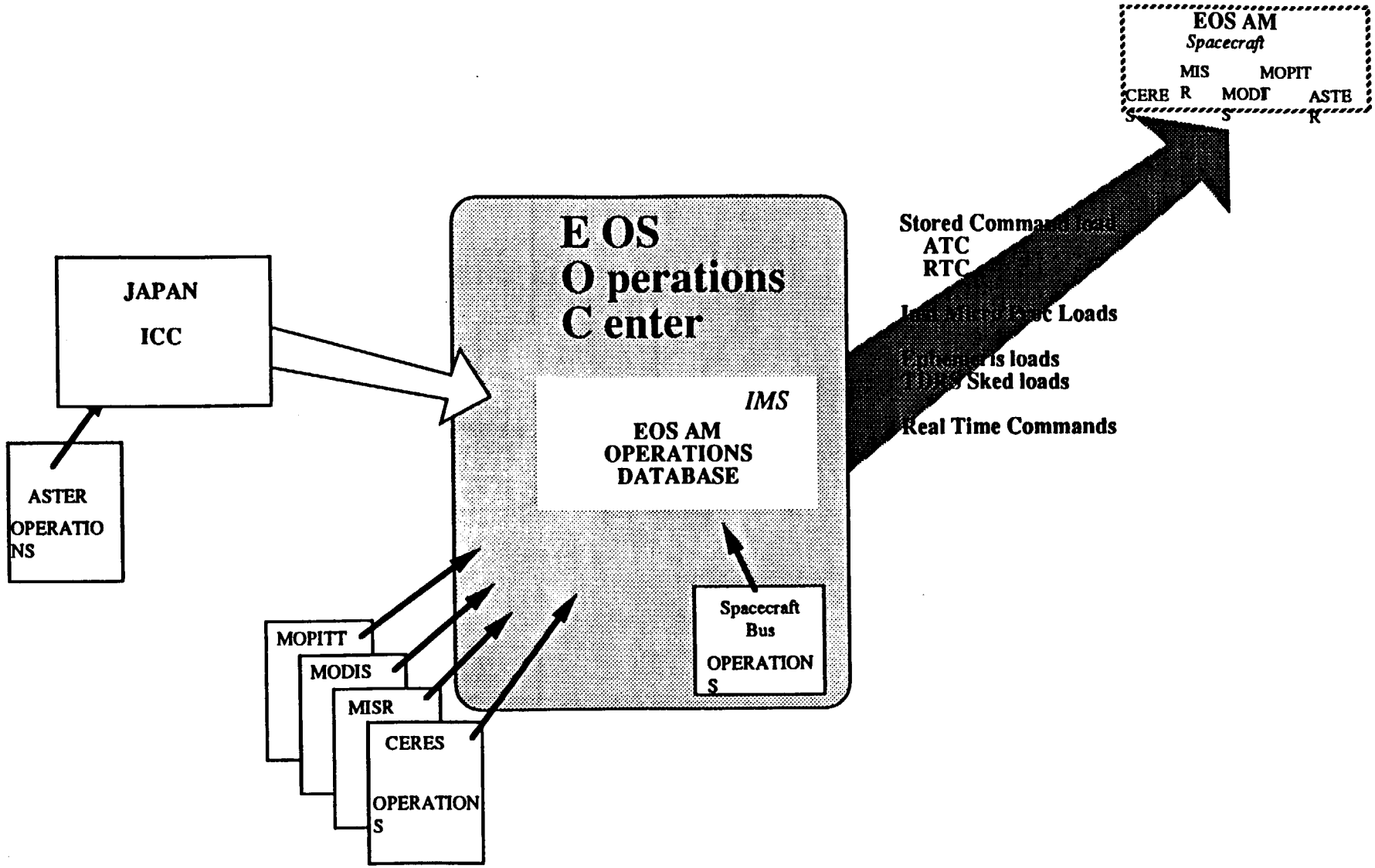

Figure 14. Managed Command Database at EOC

The use of the database could greatly simplifying the commanding process since all currently defined configurations for a given instrument for a specified period of time would exist as approved, configuration controlled items. Specific details on the use of a master command and telemetry database are currently under review.

The FOT also maintains the flight operations database to track resource utilization and Spacecraft configuration. The FOT maintains the following data for each instrument and subsystem:

- Command List
- Telemetry List
- Limit List
- Constraint List
- Procedures List
- Resource Allocation/usage
- Emergency Phone Numbers List

3.7.7 Staffing and Training

Flight Operations Engineering develops both the Staffing Plan (OPD-12) and the The Training Plan (OPD-13). The Staffing Plan identifies the positions to be filled for the FOT, the Spacecraft Ground Elements (SSIM, SAS, and the SDF), and the Sustaining Engineering Team. It also describes the special temporary staffing effort at the EOC for launch support.

The FOT Staffing Plan provides for a phased staffing of the FOT beginning two years before launch, with the FOT Manager, the Secretary, and 2 of the On-Line supervisors being brought on board at that time. The manager will support the subsequent staffing. The full staff is on board by the time training starts one year before launch. Section #6 contains additional information on the FOT and the FOT Staffing Plan. Figure 15 shows the FOT staffing schedule.

The Training Plan describes the training that will be implemented for the Flight Operations Team , members of relevant EOSDIS Core System (ECS) elements, and EOS project management and program personnel supporting the the EOS AM mission. The Training Plan also describes the training approach and training methods to be used to accomplish the training mission. Computer Based Instruction (CBI) will be the primary method shaping the development and implementation of the training program.

Table 1 provides a summary list of key tasks to be performed to support training. The Training Materials Document (OPD-14) contains the lesson plans, study guides, visual aids, handouts, and a course syllabus. Training is scheduled to start one year before launch to accommodate training

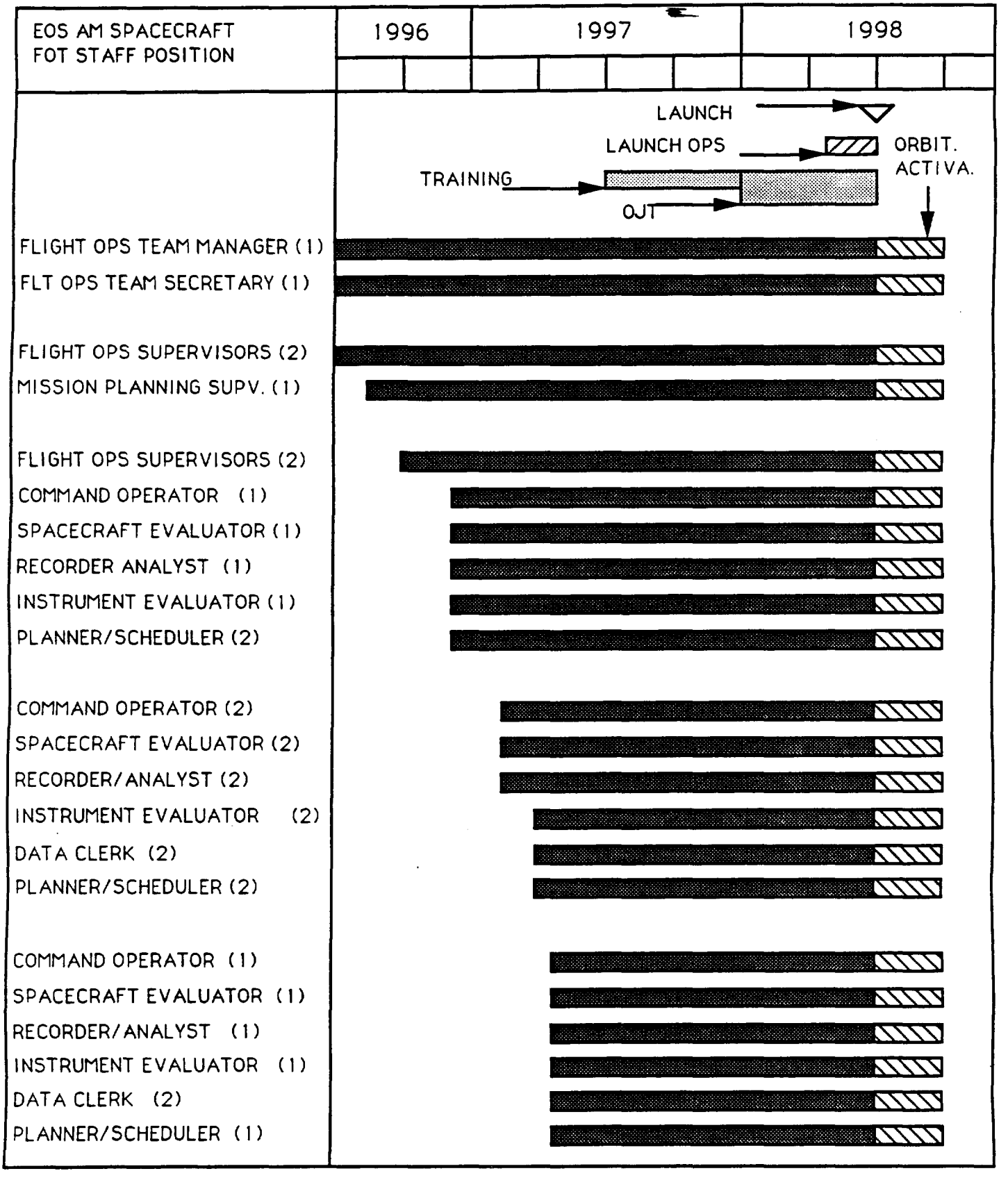

Figure 15. FOT Staffing Schedule

Training Tasks

- Perform Task Analysis
- Scheduling & Coordinating
- Conduct Training
  - Select Training Media
  - Give Examinations
  - Schedule Hands-on Training
- Record Keeping
- Configuration Management

Table 1. Summary List of Training Tasks

scheduling for the FOT and those members of the ECS requiring more than just the introductory level training lessons. This timing is also designed to facilitate the integration of training around the ground system integration and test activities. Figure 16 shows the Training Schedule.

3.7.8 Integration and Test Support

Flight Operations Engineering supports the I&T test activities at the contractor's facility, with particular focus on the tests conducted with the EOC (e.g., end-to-end tests). These tests give flight operations personnel the opportunity to become familiar with operator interfaces as well as the communications systems requirements. Flight Operations Engineering also participates in Spacecraft integration activities to gain understanding on how the test procedures are validated and updated, which is useful when operations has to train the FOT to perform such tasks. Most of the operations effort in the implementation of flight to ground test activities is provided by the FOT, with support from Flight Operations Engineering.

3.7.9 Ground System Readiness activities

Flight Operations Engineering develops the Operational Readiness Plan which defines the activities associated with verifying integrated ground system operations with the Spacecraft at the contractor's facility and/or at the launch site.

3.7.10 Launch Readiness activities

Flight Operations Engineering supports the FOT in preparing the EOC for launch support activities such as launch script development, monitoring of

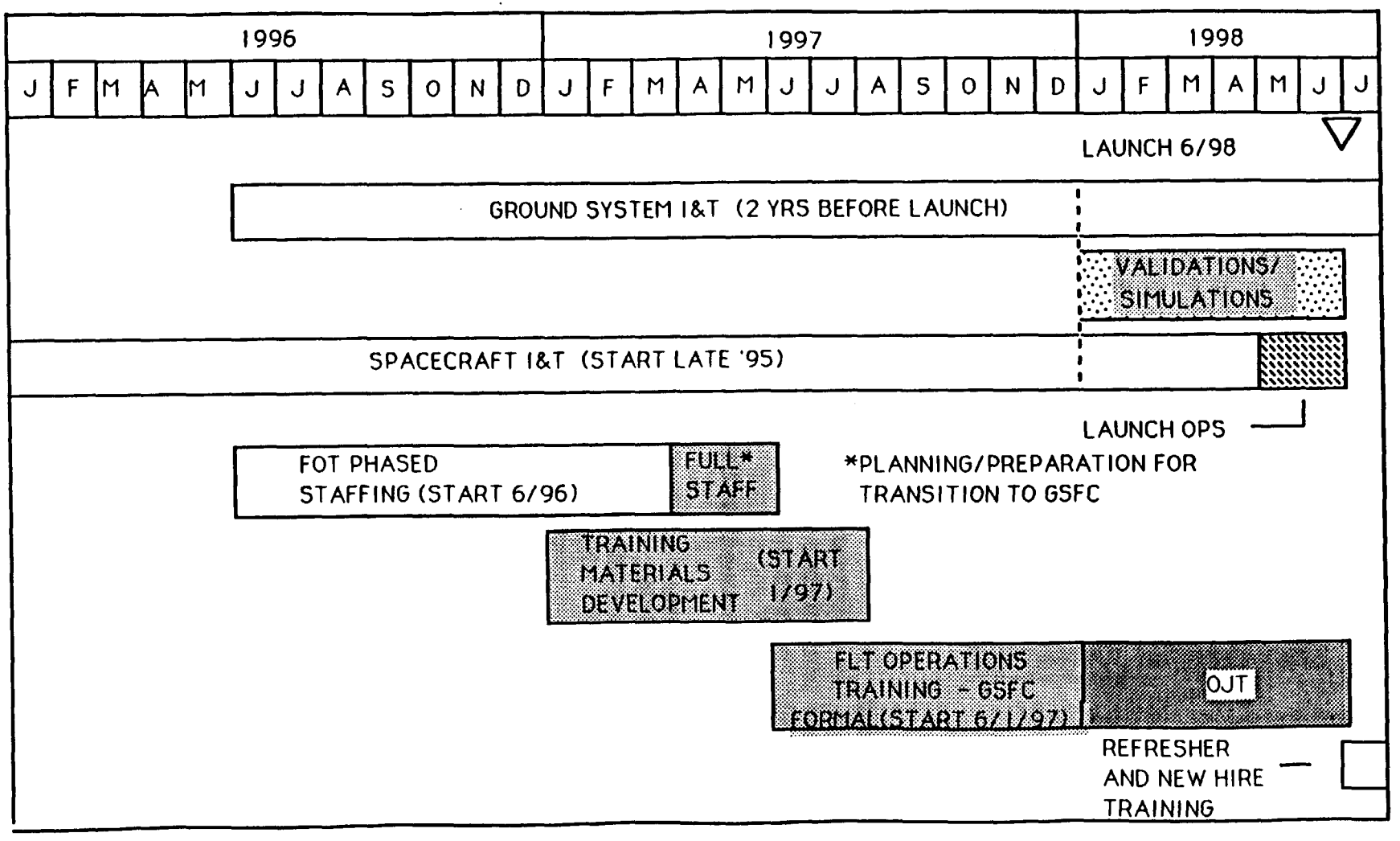

Figure 16. Training Schedule (Preliminary)

the countdown being communicated from the launch site, and preparing for the eventual command and control of the Spacecraft.

3.7.11 Operations Development Products/Summary

Table 2 below shows the documentation to be developed by flight operations.

DOCUMENT TITLE (INCLUDED IN WBS #31, OPS RE-PLAN)	DRD NO. (Tempo-rary)	DOCUMENT DUE DATES DRAFT	PRELIMINARY	UPDATE	FINAL
Flight Operations Management Plan	MD-B	S/C PDR - 4 MO	S/C PDR	S/C BUS CDR	Launch -28 mo
Flight Systems Manual	OPD-1	S/C PDR = 2 MO	S/C CDR -3 MO		LAUNCH - 28 MO
Flight Systems Operations Manual	OPD-2	LAUNCH - 24 MO	LAUNCH - 16 MO		LAUNCH - 9 MO UPDATE -L-2 MO
Instrument Flight Operations Under-standing Doc. CERES	OPD-3a	APRIL, 1993	AUGUST, 1993		DECEMBER, 1993
Instrument Flight Operations Under-standing Doc. MISR	OPD-3b	APRIL, 1993	AUGUST, 1993		DECEMBER, 1993
Instrument Flight Operations Under-standing Doc. MODIS	OPD-3c	APRIL, 1993	AUGUST, 1993		DECEMBER, 1993
Instrument Flight Operations Under-standing Doc. MOPITT	OPD-3d	APRIL, 1993	AUGUST, 1993		DECEMBER, 1993
Instrument Flight Operations Under-standing Doc. ASTER	OPD-3e	APRIL, 1993	AUGUST, 1993		DECEMBER, 1993
Flight System Plan	OPD-4	S/C BUS CDR	S/C CDR +4 MO		LAUNCH - 14 MO
Operations Activities Manual	OPD-5	S/C CDR +7 MO	LAUNCH - 21 MO		LAUNCH - 17 MO
Spacecraft Sustaining Engineering Plan	OPD-10	LAUNCH - 22 MO	LAUNCH - 19 MO		LAUNCH - 16 MO
Data Base Plan	OPD-11	TBD		AS REQUIRED	
Staffing Plan	OPD-12	S/C CDR + 2 MO		AS REQUIRED	
Training Plan	OPD-13	AUGUST, 1992	S/C CDR + 6 MO		LAUNCH - 20 MO
Training Materials	OPD-14	LAUNCH - 24 MO	LAUNCH -20		LAUNCH - 16
Operations Readiness Test Plan	OPD-15		S/C BUS CDR +6 MO		UPDATE AS REQUIR.
Ground System Requirements	OPD-16	S/C PDR +8 MO	S/C CDR		LAUNCH -23 MO UPDATE AS REQUIR
Command Lists	OPD-17	S/C PDR	S/C CDR	AS REQUIRED	LAUNCH - 9 MO
Telemetry Lists	OPD-18	S/C PDR	S/C CDR	AS REQUIRED	LAUNCH - 9 MO
Operations Concept	OPD-19	S/C PDR			S/C PDR + 6 MO

Table 2. Documentation Development Schedule

4 Launch and Activation Activity

4.1 Overview

The Launch and Activation (L&A) Activity starts 18 months before launch, and is focused on efforts to prepare the ground elements and flight operations personnel for Spacecraft launch and mission operations. While this section is called Launch and Activation, it is really concerned about launch and activation preparation. The L&A Activity encompasses the planning and integration of tasks and activities to: 1.) verify Spacecraft and ground systems operational readiness; 2.) support Spacecraft launch in the EOC; and 3.), plan and implement the activation and checkout of the EOS AM Spacecraft.

- Completion of FOT staffing
- Implementation of FOT training
- Sustaining Engineering Selection and Staffing
- Staffing for additional launch support personnel in the EOC
- Support/Coordination of Operational Readiness Testing, Including end-to-end testing
- Implementation and Validation of the flight operations database and flight operations procedures
- Assure that all required resources and equipment needed to support flight operations are in place

The launch preparation effort also includes the implementation of plans and tasks to assure adequate communications between the launch site and the EOC, coordination/development of the Launch Script, monitoring of the Spacecraft launch and separation from the launch vehicle.

Figure 17, Flight Operations Development Plan Concept, shows the Launch and Activation Activity, with expected preparation tasks and outputs.

4.1.1 Launch and Activation Approach/Objectives

Flight Operations Engineering evaluates the Launch and Activation preparation (tasks and determines the level and types of contractor support required to perform the tasks. Flight Operations Engineering reviews the L&A support requirements with Hardware and Software Engineering, SE&I, and other EOS program functions such as Human Resources (for staffing support), and coordinates the allocation and scheduling of personnel and other resources to support flight operations (e.g., personnel, Spacecraft Simulator). Flight Operations Engineering, in conjunction with I&T, also verifies that ground systems requirements pertaining to flight operations support identified in the DMRD have also been provided and are in place to support the L&A tasks.

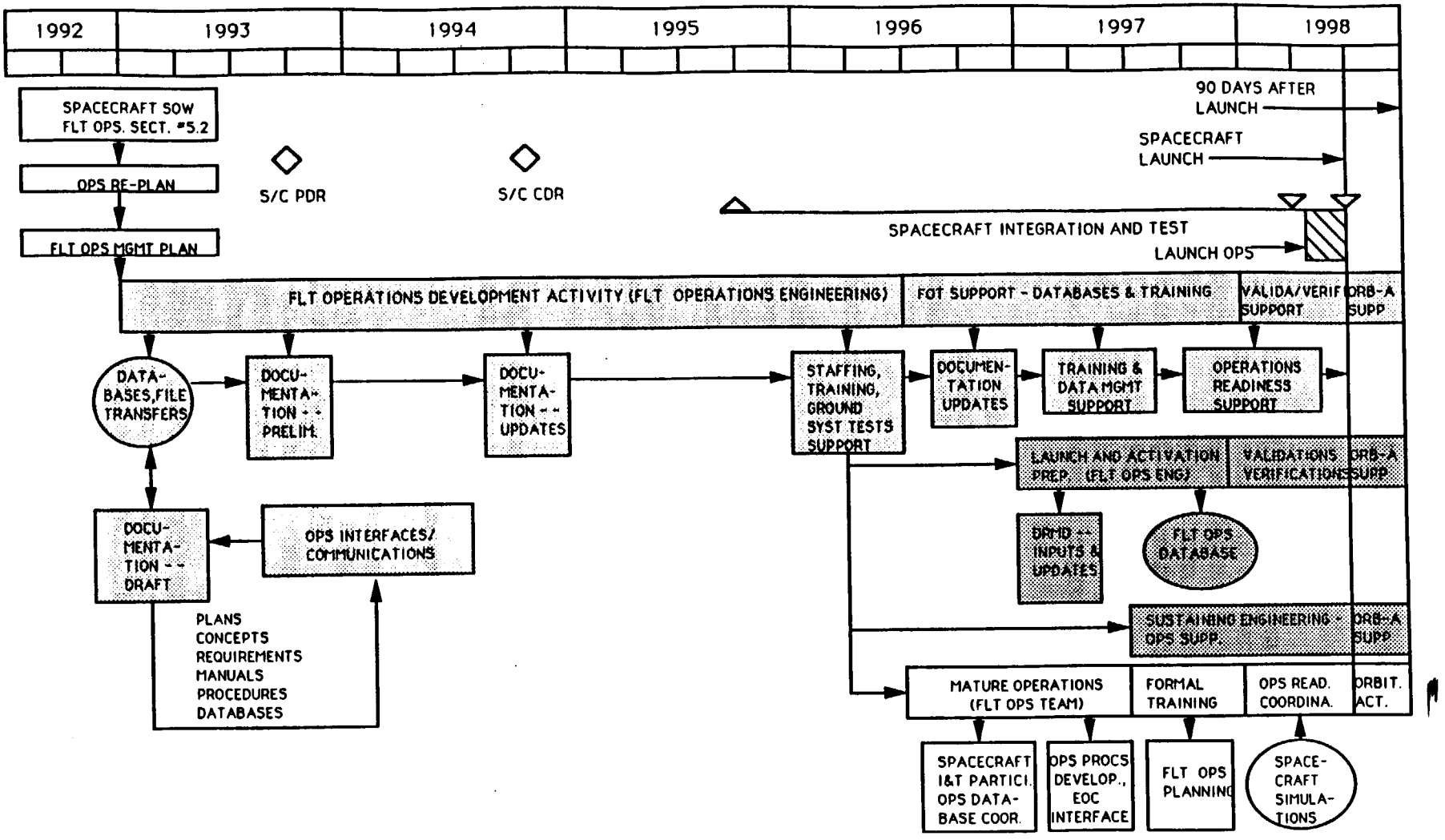

Figure 17. Flight Operations Development Plan Concept - Launch & Activation and Sustaining Engineering

Other L&A objectives include:

1. Provide adequate support to the FOT effort to implement/coordinate end-to-end tests with the Spacecraft at the contractor's and at the Launch Site, and support evaluations to verify tests occurring within allocated planning parameters.

2. Coordinating the implementation of Launch operations support in the EOC to coincide with launch operations at VAFB at Vandenberg, AFB, (beginning approximately 2 months before launch)

The FOT identifies support requirements from other organizations supporting the EOS flight operations program for testing and launch readiness tasks.

4.1.2 Staffing

The L&A staffing preparations include of: 1.) assigning the appropriate number and types of personnel, including Sustaining Engineering and flight operations experts, to support L&A tasks at the EOC (e.g., helping the FOT with the operations database(s) population); 2.) checking and verifying the operational and availability status of ground facilities to support L&A staffing activities; 3.) planning and allocating instructor and training support personnel (e.g., equipment operators) to support to support training; and 4.), assuring that sufficient operations personnel are in place to support the operational readiness testing.

The Flight Operations Engineering Team Leader, in support of the FOT Manager, participates in the selection and assignment of the Sustaining Engineering personnel to assist the FOT in the operation and maintenance of the Spacecraft. The Sustaining Engineering Team activity begins one year before launch, which is 8 months into the L&A period (i.e., approximately one year before launch). This support is provided on an as needed basis from a small cadre of Spacecraft subsystems and flight software experts. The additional launch support personnel includes a broad range of personnel versed in various aspects of Spacecraft flight operations.

4.1.3 Training Support

The EOS AM S/C Flight Operations Training Program also takes place in the EOC, starting one year before launch. The Flight Operations Engineering Organization provides/identifies the resources and needed to conduct the training program, and coordinates the use of EOC facilities and equipment for training (e.g., the use flight operations console for on-the-job (OJT) training exercises).

4.1.4 Launch and Activation Responsibilities

The FOT has the lead responsibility for all L&A flight operations activities except training, which is conducted by Flight Operations Engineering. The data that follows provides a summary of the responsibilities of each group.

4.1.4.1 Flight Operations Engineering

Flight Operations Engineering provides the early planning for the L&A effort, including the ground system integration planning. Flight Operations Engineering personnel attend interface meetings with I&T, EOS Project Management, ECS operations support personnel, and instrument operations personnel to exchange information and coordinate scheduling of flight to ground system integration and test activities. Flight Operations Engineering is also responsible for conducting/coordinating the Flight Operations Training Program.

4.1.4.2 FOT Launch and Activation Role

The FOT has the lead flight operations responsibility for planning and coordinating Spacecraft operational readiness verification test activities at the EOC. The FOT also supports the implementation and verification of the the pre- launch Spacecraft checkout tasks at Vandenberg Air Force Base (VAFB). At launch, the FOT monitors the activities at the launch site, and then takes control of the Spacecraft after it has separated from the launch vehicle, and begins the orbit acquisition process. Once the proper orbit has been attained, the FOT begins the checkout process to establish the Spacecraft readiness for operations.

In a parallel effort to the operational readiness effort. the FOT also plans/coordinates with Instrument operators, the implementation of plans, developed in accordance with EOS mission planning requirements, for early flight operations mission science activities. These plans and activities are also developed under the direction of the Mission Operations Manager (MOM); however, these plans are held under configuration control until all the Spacecraft checkout and orbital verification tasks have been satisfactorily completed. All mission operations activities in the EOC are performed under the management and direction of the Mission Operations Manager with support from the Flight Operations Team Manager.

The FOT is also responsible for configuration control of all Spacecraft documentation and the flight operations database at the EOC.

4.1.4.3 Sustaining Engineering Team Launch and Activation Support

The Sustaining Engineering personnel come on board to support the FOT at one year before launch on an as needed basis. The Sustaining Engineering personnel are responsible for performing off line in-depth analysis support,

including the review of trend data, anomaly resolution support, designated on-line support, and other specific support as requested by the FOT.

4.2 EOS System Testing

The FOT supports planning and implementation of flight and ground system network testing from the EOC. The tests are conducted to demonstrate the operation and interface of the Spacecraft with the Space Network (SN) and ground supporting elements. The Spacecraft and the Spacecraft ground elements, and the relevant ECS and NASA Institutional Elements involved in flight operations are included in the EOS system testing.

The secondary focus of the FOT during EOS testing will be the conversion of I&T procedures to operations procedures, and using the procedures to support the test activities and validate the procedures in the process.

4.2.1 Test Coordination

The FOT has the lead flight operations responsibility for coordinating/supporting verification planning and the testing and validation/verification of the ground system with I&T and the relevant ECS elements, NASA Institutional elements, and the Spacecraft. These tasks include integrated ground system network tests with the Spacecraft at the contractor's facility and at the launch site, to exercise Spacecraft command and telemetry links, Spacecraft to TDRSS transmission, and TDRSS to the EOC via the EOS ground system).

4.2.2 Launch Site/EOC Launch Readiness

The FOT, with support from Flight Operations Engineering, provides plans, procedures, and schedules to coordinate operations support for tests conducted to verify launch site and EOC launch readiness. This includes identifying, coordinating, and scheduling the support required from other EOS and NASA Institutional elements to support the launch readiness verification tests, including the launch site to EOC communication interfaces.

I&T and the FOT coordinate/support the end-to-end testing with the Spacecraft at the launch site with the network testing in the EOC to verify launch readiness at both sites.

4.2.2.1 Launch Readiness Procedures

The FOT plans/coordinates the implementation of launch readiness tasks in the EOC. The FOT uses procedures converted from the I&T database and/or procedures developed by the FOT to perform the launch readiness tasks. After the tasks have been completed, the procedures are maintained in the EOC by the FOT under configuration control.

4.2.3 Launch and Activation Operations Documentation

As part of the Launch and Activation preparation effort, the FOT implements plans and procedures for storing, checking, and retrieving flight and ground systems documentation delivered to the EOC to support flight operations. In addition, the FOT develops/modifies operations procedures and may even maintain some of them in hardcopy format. The FOT interfaces with all EOS AM program flight operations participants in the acquisition, storage, and maintenance of flight operations documentation in the EOC. In addition to the documentation shown in the table, the FOT maintains the flight operations database, which contains the Spacecraft computer monitoring and Spacecraft and Instrument operating procedures and the requisite database parameters.

4.2.3.1 Documentation Storage Accommodations

Facilities and storage for flight operations documentation in a library in the EOC will be defined in DMRD in the list of flight operations requirements to be levied upon the ground system.

4.2.3.2 Database Transfer

The FOT implements the conversion and transfer of the flight operations database, with support from I&T and Software Engineering. The FOT coordinates the database verification with the I&T database.

4.3 Launch and Activation Planning

The FOT, in conjunction with instrument operations personnel, and the Mission Operations Manager (MOM) prepares plans and schedules to support the EOS AN Spacecraft launch/ascent and orbital verification activities. These plans provide for health and status monitoring, contingency operation, data handling, resource scheduling, and command management. These plans also provide for the instrument activation tasks that are to be conducted after the Spacecraft has attained its proper orbit and all Spacecraft systems operations have been completely checked out. In addition, plans for science operations, , worked out in accordance with the Investigator Working Group (IWG) planning and the instrument operators, are in a readiness state, under configuration control, pending the completion of the orbital verification activities.

The Launch and Activation planning is developed within the framework of the EOS AM Spacecraft mission phases and the Spacecraft system operating modes which define the requirements for transitioning from one mission phase to another. The initial mission operations plans are stored under configuration control until all Spacecraft orbital verification activities are completed and the Spacecraft is in the ready for operations state.

4.3.1 Orbital Activation Coordination

The FOT coordinates orbital verification test planning with all elements required to support the EOS AM Spacecraft flight operations mission.

4.3.2 Operational Mission Planning Coordination

The FOT plans/Coordinates EOS AM mission planning for mission operations activities that begin after orbital verification is complete or until 90 days after launch. This is also dependent on the exercise of the contract option by the customer.

4.4 Launch and Activation Products/Summary

The Launch and Activation Activity product is a system ready to perform the EOS AM program science mission, with the appropriate levels of support to maintain the system over its intended life.

5 Sustaining Engineering

5.1 Overview

The Sustaining Engineering Function provides a level of expertise above that available in the Flight Operations Engineering Organization and/or the Flight Operations Team (FOT). The Sustaining Engineering personnel perform on an as-needed basis in response to a problem or a spacecraft emergency defined by the FOT. The Sustaining Engineering Team (SET) responds as requested by the FOT and is staffed with specialists from the disciplines which are required for the particular problem or emergency. These specialists are the same individuals who performed the design, development and test of the spacecraft and its associated systems and instruments.

5.1.1 Staffing Approach/Objectives

The Flight Operations Engineering Team Leader participates in the selection of the Sustaining Engineering personnel in conjunction with the contractor Systems Engineering and Integration (SE&I) Manager, Human Resources, the Flight Operations Team Manager, and other managers as appropriate. Under the current schedule, the Sustaining Engineering Team is in place one year before launch, with the selection process beginning many months earlier.

The goals of the early selection process are as follows:

1. Identify Spacecraft subsystems and flight software personnel working on the EOS AM Spacecraft who have excellent in-depth knowledge about the Spacecraft, its major components, and/or its operating environment.
2. Establish criteria/procedures for requesting/assigning task(s) to Sustaining Engineering personnel.
3. Implement Sustaining Engineering support on an as needed basis.

5.1.2 Sustaining Engineering Responsibilities

Sustaining Engineering is responsible for supporting the FOT in the operation and maintenance of the EOS AM Spacecraft, and the Spacecraft ground elements -- i.e., SAS, SSIM, and SDF.

5.2 Sustaining Engineering FOT Support

The Sustaining Engineering Team (SET) assists the FOT in evaluating test results and in converting test procedures to operations procedures during the operational readiness testing activities. A summary listing of the types of support provided by Sustaining Engineering includes:

- On-orbit verification
- Trend Analysis
- Anomaly investigation
- Maintenance and review of short-term housekeeping telemetry files and short term command histories
- Orbit adjust planning
- Telemetry limits monitoring
- Developing on-orbit testing/trouble-shooting procedures

The following data provides additional information on Sustaining Engineering tasks.

5.2.1 Off-line analysis

Off-line analysis of the performance of the spacecraft, its systems and instruments, is performed by the FOT with support from Sustaining Engineering. This activity is on-going and continuously follows both short-term and long-term trends of key parameters. The off-line activity also includes monitoring of alarms and out-of-limits messages and evaluating their effects on spacecraft health and safety. When a condition develops which is not clearly understood by the off-line group or cannot be rectified by them, the SET is notified, and the personnel with the appropriate experience are assigned to the task.

In the event of a more serious, longer term problem or multiple problems, the SET will continue with the problem until it is resolved or reduced to a level that it can be monitored, controlled and mitigated by the FOT.

5.2.2 Resource Management

The SET provides the Mission Scheduler with Spacecraft resource management information such as power and heat removal to support FOT selection of equipment that may be activated, devices that may be activated simultaneously with other devices/equipment, and the duration of the activity.

5.2.3 Anomaly/Fault Detection and Isolation

Sustaining Engineering monitors and analyzes the Spacecraft for extended durations, performing trend analysis studies to detect trends that may require corrective action, and operations analysis for incipient failure detection, fault isolation, and possible solution evaluations.

5.3 Sustaining Engineering Products/Summary

Sustaining Engineering is a level of effort activity, with the primary output products being reports on work performed and system performance.

6 Mature Operations

6.1 Overview

The Mature Operations Activity defines the tasks to be performed by the Flight Operations Team (FOT), including their participation in the Flight Operations Training Program, and their phased on-board staffing supported by the Flight Operations Team Manager. The Mature Operations Activity begins 2 years before launch and extends through the orbital verification phase that ends 90 days after launch, with 3 one-year operations for the contractor provided FOT to operate the EOS AM Spacecraft. In addition to training and staffing, the Mature Operations Activity tasks include FOT support/participation in Spacecraft flight elements integration and test activities, including the EOS AM Instrument set, at the contractor's facility, and the Spacecraft ground control elements operational readiness verification test in the EOC. Figure 18 shows the Mature Operations Activity and expected outputs from the Mature Operations Activity tasks (areas with hash marks on the chart), under the Flight Operations Development Plan Concept. The chart also shows the FOT responsibility for Orbital Activation.

Flight Operations Engineering, which has participated in the hiring process, establishes informal training tasks for the FOT depending upon the prior experience of the individual. The tasks are designed to familiarize the individual with the EOS AM program and to provide insight into how the person's previous experience will be used to support EOS AM flight operations. At one year before Spacecraft launch, the FOT begins the formal training program. After their formal training is completed, the FOT interfaces with the EOS AM program ground system elements to support ground system readiness testing and launch readiness. These tasks are performed in the EOSDIS Core System (ECS) EOS Operations Center at the Goddard Space Flight Center.

6.1.1 Approach/Objectives

The approach to be used in implementing the Mature Operations Activity is to staff the FOT with people with as much current flight operations experience as possible, and to verify that all documentation and other resources (equipment, facilities) necessary for defining and implementing flight operations are available in the EOC and ready for use. The staffing approach has two objectives: 1.) select FOT personnel with sufficient experience to perform/support flight operations on-going tasks shortly after they come on board ; and, 2.) provide a level of staffing that matches the growth in prelaunch activities and tasks.

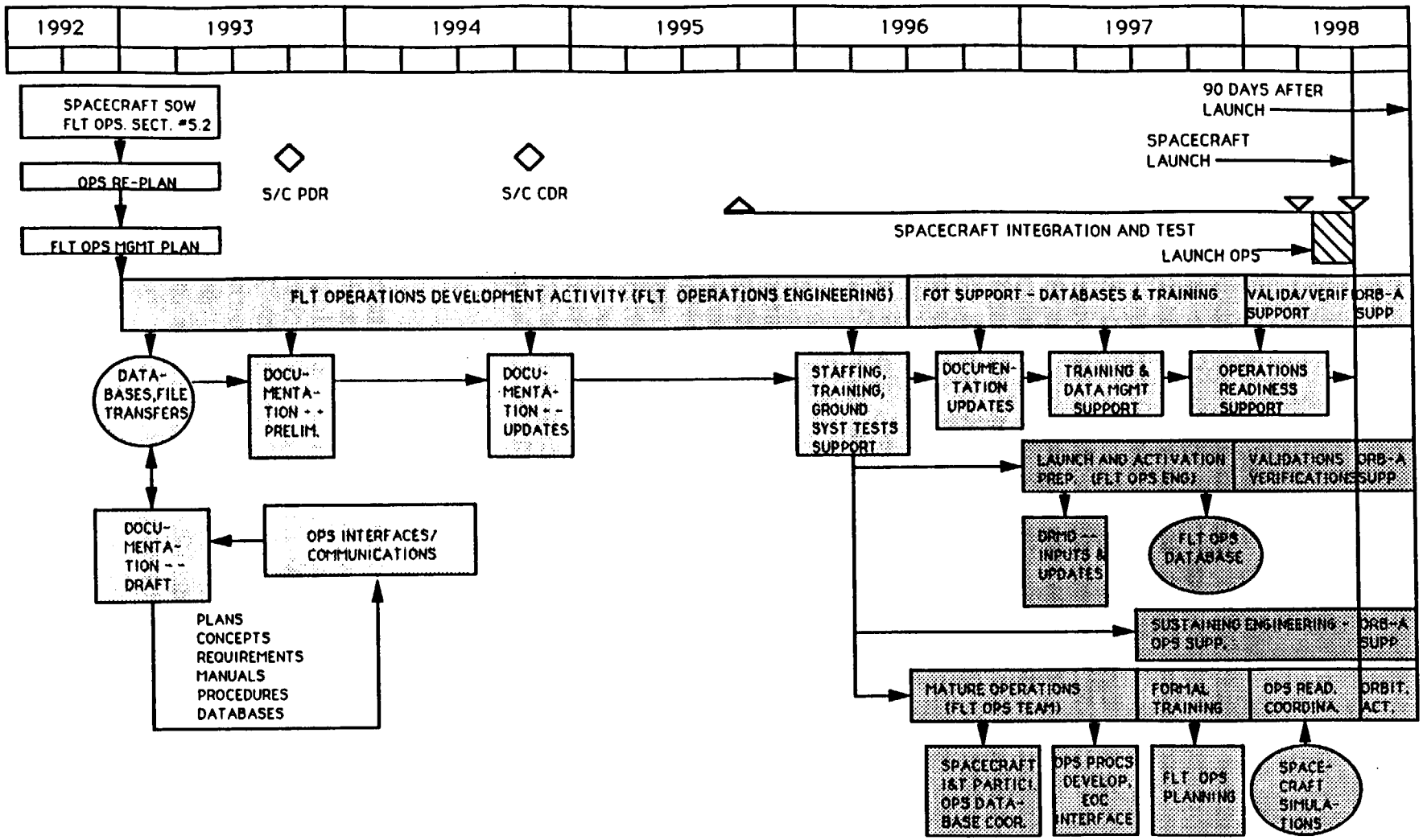

Figure 18. Flight Operations Development Plan Concept - Mature Operations

6.1.2 Mature Operations Responsibilities

The focus of the Mature Operations Activity is the Flight Operations Team (FOT), and the responsibilities it has in the planning and implementation of flight operations from the EOC. However, Flight Operations Engineering is responsible for hiring the FOT and getting the FOT ready to assume its role in flight operations. The information below provides a summary of the Flight Operations Engineering and FOT responsibilities under the Mature Operations Activity.

6.1.2.1 Flight Operations Engineering

Flight Operations Engineering takes the lead role in planning and implementing the FOT staffing effort and the flight operations training program. Flight Operations Engineering also supports the FOT efforts to identify and plan the level of types of resources required to support the operation of the EOS AM Spacecraft.

Flight Operations Engineering is also responsible for communicating Spacecraft flight operations ground support requirements to the government via the Detailed Mission Operations Requirements Document (DMRD). The objective this effort is to provide early communication of the EOS AM Spacecraft requirements for facilities, systems, equipment, and related ground resources to support EOS AM Flight Operations.

6.1.2.2 Flight Operations Team (FOT)

The FOT has the principal responsibility for the operation, and health and safety of the Spacecraft. The FOT manages the acquisition/development and maintenance of operations procedures in the EOC, coordinates operations readiness testing, coordinates/monitors the Spacecraft launch/ascent in the EOC, and operates the Spacecraft after it is separated from the launch vehicle. The FOT also performs flight operations planning and scheduling in accordance with EOS program policies and procedures.

The FOT monitors Spacecraft housekeeping telemetry in real time or playback modes, to track and evaluate Spacecraft elements trends, including subsystem and instrument limit conditions and resource utilization. The FOT is supported by the contractor provided Spacecraft Simulator SSIM), the Spacecraft Analysis Software (SAS), and the Software Development Facility (SDF). The FOT is also supported by the contractor provided Sustaining Engineering Team.

The FOT Manager is responsible for allocation and control of flight operations resources and management of the administrative functions, including finance, personnel, security, health and safety. The FOT Manager is part of a team that resolves mission operations planning and scheduling conflicts (other members of the team include the MOM and the Project

Scientist or designee). The Flight Operations Team Manager reports directly to the EOS AM Project Mission Operations Manager (MOM) at GSFC. The MOM serves as the focal point for technical direction from the various EOS elements to the Flight Operations Team.

The EOS AM Spacecraft Program Manager at Martin Marietta provides contract direction and support to the FOT Manager.

Figure 19 shows the FOT organization. The dotted lines show the Sustaining Engineering support available at the contractor's facility on an as needed basis, and at the SDF at the contractor's facility to support software maintenance

6.1.3 General Management Policies

The FOT is responsible for performing its flight operations tasks in accordance with all applicable Martin Marietta and GSFC policies and procedures, including safety requirements, configuration management requirements, and the documentation and generation of required reports. Flight rules, ground operations procedures and the objectives of the EOS AM science mission are also included.

6.2 Mature Operations FOT Readiness

The initial staffing of the FOT implements The Mature Operations Activity. The FOT Manager and the early supervisory hires assist Flight Operations Engineering in the selection and staffing of the remaining FOT staff and in the determination of the level of additional contractor personnel needed to support the launch and activation activity at the EOC. As they come on board, the FOT begin participating in the Spacecraft integration and test activities, developing operations procedures, and developing plans to coordinate and support updates of flight operations documentation and database plans. The FOT also acquires necessary data and establishes plans and schedules for their participation in the Flight Operations Training Program.

6.2.1 Spacecraft Integration and Test Support

The FOT supports the EOS AM Spacecraft End-to-End tests, and other tests as required, gathers information in supporting flight operations, and supports flight operation facility/systems integration and test. The following is a summary list of FOT test support tasks:

- Participates in Spacecraft End-to-End tests with the Spacecraft at the contractor's facility and with the Spacecraft at the launch site
- Generates Standard Operating Procedures (SOPs) for flight operations.

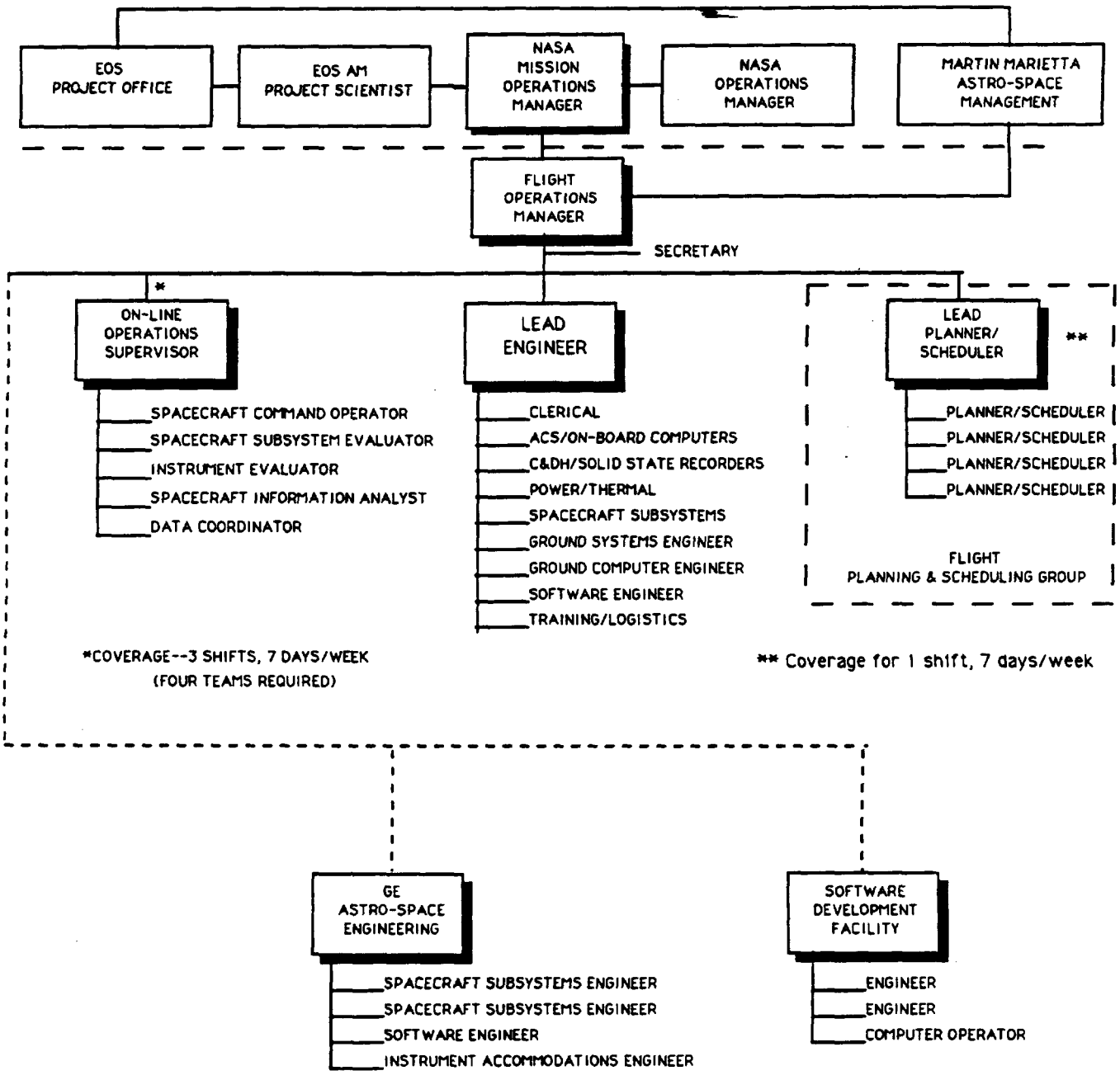

Figure 19. Flight Operations Team (FOT) Organization

- Supports/coordinates performance of mission scenario simulations with other EOS ground elements as required.
- Plans, supports conversion of the I&T database to the flight operations database.

6.2.2 FOT Training

FOT personnel receive training on the EOC hardware and software in preparation for Operational Readiness Testing and orbital verification tasks from the ECS EOC developer and Instrument Operations training from the Instrument developers. FOT informal training begins as soon as the FOT personnel come on board. Flight Operations Engineering plans tasks and distributes EOS AM documentation to the FOT to facilitate the learning process. FOT personnel are assigned to assist/work with Flight Operations Engineering personnel on projects in which FOT personnel have had prior experience. The FOT training is managed by the Flight Operations Program Training Coordinator. The Training coordinator has the following responsibilities:

- Preparation and maintenance of training materials
- Planning and scheduling on-the-job (OJT) instructors and equipment for flight operations activities
- Skills certification and re-certification
- Providing training simulations instructions and control
- Performing training administration, including formal classroom training record keeping
- Coordinating Flight Operations Training schedules with other EOS AM training program deliverers/training recipients

6.2.3 Flight Operations Database and Documentation

The FOT plans/supports the development/acquisition of operations databases, O&M manuals, training materials, and operations history data (primarily test data in the early stages of the program). For EOS AM flight operations, the FOT manages documentation, both on line and off line, to support operations and maintenance. The FOT is responsible for the implementation, verification, and configuration control of the various EOS ground databases used by the ground control systems to operate the EOS AM Spacecraft.

The FOT has the lead responsibility in the conversion of the I&T database to the operations database, with support from I&T and Flight Operations Engineering.

6.2.4 Operations Readiness Coordination

The FOT supports the operations readiness test activities conducted in the EOC and with the Spacecraft at the contractors facility and with the Spacecraft at the launch site. These tests are conducted to verify the readiness of the ground system to support Spacecraft flight operations. The FOT, with support from I&T, develops the launch script to be followed in the EOC in preparation for the launch of the Spacecraft. During launch, The FOT monitors Spacecraft Bus housekeeping telemetry (if available) during the Spacecraft launch/ascent phase.

6.2.5 Orbital Activation

The EOC Flight Operations Team monitors the Spacecraft launch/ascent, and after separation from the launch vehicle, the FOT assumes the Spacecraft command and control function. After the Spacecraft has attained the required orbit and essential resource systems are operational, the FOT begins implementation of a series of activities to verify the Spacecraft health and status, activate the Spacecraft subsystems, activate the Instruments, and to verify the functional performance of the Spacecraft. The FOT, in conjunction with the MOM and contractor I&T personnel, plan the orbital activation and verification exercises.

The EOC provides the facilities for the on-orbit command, control, data processing, and performance evaluation of the EOS AM Spacecraft. The FOT supports EOS AM Spacecraft flight operations 24 hours per day and 7 days a week during the mission operations phase from the EOC facility.

6.3 Spacecraft Operations

The FOT is responsible for establishing a Spacecraft operations plan which is compatible with planned Instrument operations to the extent possible without compromising Spacecraft health and safety or overall mission guidelines.

6.3.1 Flight Operations Planning

The FOT performs planning and scheduling for the orbital activation exercises, and scheduling of the early mission activities that take place after orbital verification has been completed and the Spacecraft is verified to be in the readiness for operations state.

The FOT, in conjunction with the MOM, uses the Long-Term Science Plan and the Long-Term Instrument Plan to develop a long-term Spacecraft operations plan that is used to develop and plan the early mission operations plans and schedules -- i.e., initial scheduling and daily science plan and Spacecraft operations plan (details on the planning and scheduling process is provided in the Operations Activities Manual, OPD-5) and the Operations

Concept Document, OPD-19). Once approved, the early mission operations plan(s) are placed under configuration control until ready for use.

6.3.2 Flight Operations Implementation

The Spacecraft contractor is responsible for coordinating and integrating orbital verification testing to assure Spacecraft operational capability, and for performing daily operations of the Spacecraft until 90 days after launch. The daily operations include: health and status monitoring, contingency operation, instrument operations planning, data handling, resource scheduling, and command management.

6.4 Instrument Operations

Instrument operations are included in the pre-flight mission operations planning activities, and when full Spacecraft resources are provided to the Instruments, those plans will be implemented.

6.5 EOC Support

The EOC provides the focal point for the FOT/Mission activities. The FOT uses the EOC to actively communicate with the Spacecraft ground elements, the ECS FOS, EDOS, ECOM, the NASA Institutional Elements, and the EOS AM Spacecraft. The EOC also enables the FOT to communicate with other EOS program elements as required.

6.6 Post 90 Days Operations

6.6.1 Flight Operations

There are 3 one-year options for the Spacecraft contractor to continue to operate the Spacecraft after 90 days.

6.6.2 Sustaining Engineering Support

There are 3 one-year options for the Spacecraft contractor to continue to provide Sustaining Engineering support after 90 days.

10 Appendix A

Abbreviations and Acronyms

The list of abbreviations and acronyms is in the EOS-AM Spacecraft Program Acronym List (PAL), EOS-DN-SE&I-025. Flight Operations Management Plan Unique Abbreviations are listed below.

Item	Description
DMRD	Detailed Mission Requirements Document
FOMP	Flight Operations Management Plan
IFOU	Instrument Flight Operations Understanding document
L&A	Launch and Activation
OJT	On-the-Job Training
SET	Sustaining Engineering Team