CONTRACT NAS5–32500

Earth Observing System

EOS–AM SPACECRAFT PDR DATA PACKAGE

Package 4

Volume I of III

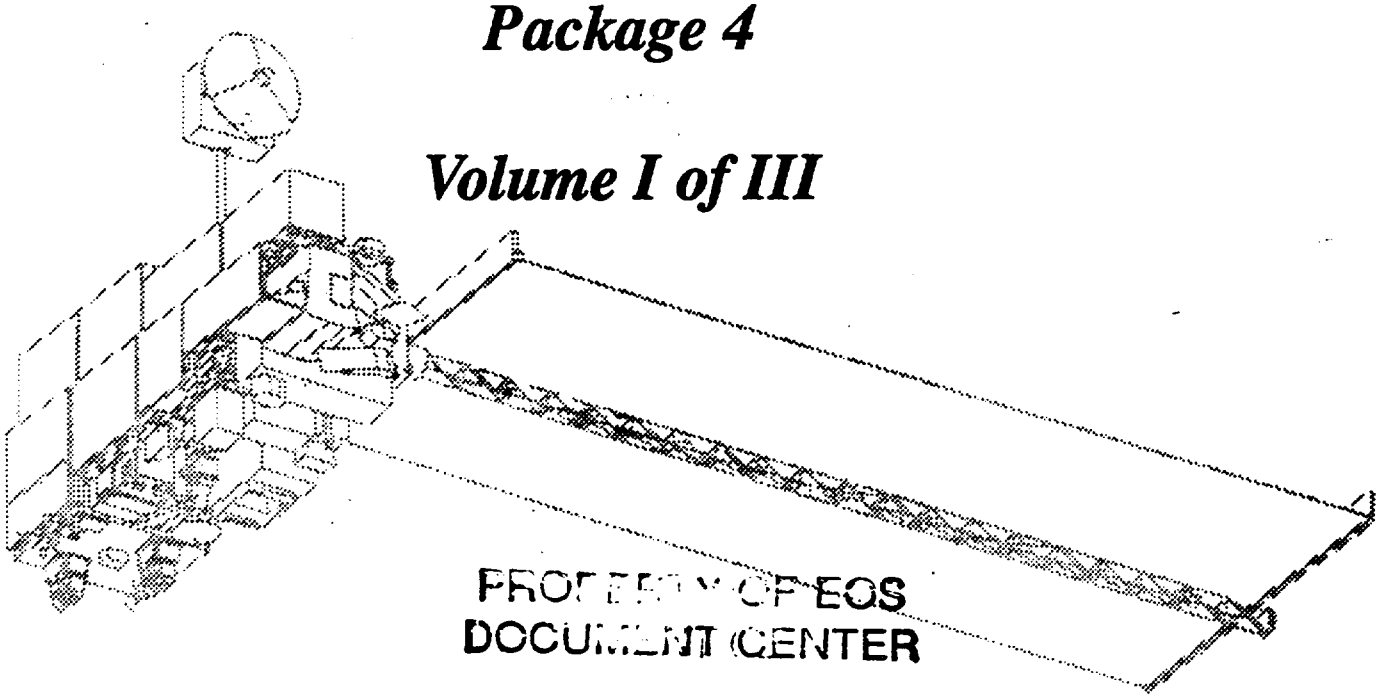

PROPERTY OF EOS
DOCUMENT CENTER

6 August 1993

EOS

MARTIN MARIETTA

MARTIN MARIETTA ASTRO SPACE
EAST WINDSOR, NJ

EOS–AM SPACECRAFT CONTRACT DOCUMENT TRANSMITTAL

TO: National Aeronautics & Space Administration Goddard Space Flight Center – Building 16W, Room N70 c/o R. Dorsey, Documentation Lib. Tech. (Code 421) Greenbelt, MD 20771 Attn: EOS–AM S/C (GSFC) C.O. & EOS/GSFC Library (Code 420)	EOS–AM S/C Program CONTRACT: NAS5–32500	IN REPLY REFER TO: EOSC–0960 DATE: 8/6/93

APPROVAL REQUIREMENTS: ☐ Type 1 requires approval of Technical Manager prior to implementation Approval Due Date _____ ☒ Type 2 time–limited right of disapproval (45 days after receipt) Approval Due Date _____ ☐ Type 3 Information Only	DR NO. MD–121 TITLE: S/C PDR Data Package No. 4 Martin Marietta Document No. References: # of Copies: 12

GSFC Distribution:

EOS Contracting Officer
J. King, Code 284.4 (letter only)

EOS GSFC Library, Code 420 (12)

REMARKS:

PROPERTY OF EOS
DOCUMENT CENTER

Outgoing GSFC Correspondence
OGC No: 93-0460
Transmit Date: 8/6/93

Originator: Internal Distribution: EOS Document Center (2) Cover Sheet Only: Program Control/C. Gyursco Configuration Management/G. Rauscher	FROM: Martin Marietta Astro Space Nassau Park P. O. Box 800 Princeton, NJ 08543–0800 SIGNATURE: R Delahaut for D. Supow, Contract Manager

EOS Form 009–04/07/93

MD-121: EOS-AM SPACECRAFT PDR DATA PACKAGE

DR/DN	TYPE	TITLE	REV	DOCUMENT	DATE
PACKAGE NO. 1				30 APRIL 1993	
SEP-101	1	Contract End Item (CEI) Specification for the EOS-AM Spacecraft	-	PS20005396	4/15/93
ICD-103	1	EOS-AM Spacecraft to Launch Vehicle Interface Reqrmnts Document	Prelim	IS20008503	4/30/93
ICD-104	1	Radio Frequency ICD Between EOS-AM S/C and STDN	-	IS20008504	3/31/93
PACKAGE NO. 2				8 JULY 1993	
EOS-DN	-	Baseline Description Document (BDD) for the EOS-AM S/C (Preliminary)	I	SE&I-010	6/10/93
EOS-DN	-	System Operating Modes	B	SE&I-001	5/21/93
SP-301	2	Performance Spec. Command & Data Handling S/S for EOS-AM S/C	-	PS20008567	6/28/93
SP-401	2	Performance Spec. Communications S/S for EOS-AM S/C	-	PS20008580	6/30/93
SP-501	2	Performance Spec. Electrical Power S/S for EOS-AM S/C	-	PS20004749	6/28/93
SP-741	2	Performance Spec. Electrical Accommodations S/S for EOS-AM S/C	-	PS20008636	7/6/93
SP-861	2	Critical Item Devlpmt. Spec. High Gain Antenna Assembly for EOS-AM S/C	-	PS20008513	10/16/92
SP-871	2	Critical Item Devlpmt. Spec. Solar Array Assembly for EOS-AM S/C	-	PS20008514	5/7/93
SEP-106	2	Electromaagnetic Compatibility (EMC) Control Plan for EOS-AMS/C	A	PN20005869	6/28/93
ICD-106	1	Interface Control Document (ICD) Data Format Control Book for EOS-AM S/C	Prelim	IS20008658	6/8/93
SD-110	2	EOS-AM S/C Flight Software System Requirements Specification	-	20008662	5/6/93
VRD-100	2	Verification Plan for the EOS-AM S/C	-	PN20005404	5/5/93

MD-121: EOS-AM SPACECRAFT PDR DATA PACKAGE (CONT.)

DR/DN	TYPE	TITLE	REV	DOCUMENT	DATE
Package No. 3				**22 JULY 1993**	
SP-101	2	Performance Spec. Structures & Mechanism S/S for EOS-AM S/C	-	PS20001415	7/16/93
SP-201	2	Performance Spec. Thermal Control S/S for EOS-AM S/C	-	PS20008549	7/20/93
SP-601	2	Performance Spec. Guidance, Navigation & Control S/S for EOS-AM S/C	-	PS20004937	7/21/93
EOS-DN	-	Housekeeping EM Layout Drawings	A	CNF-017	6/18/93
EOS-DN	-	Launch/On-orbit Deployed Configuration Layout	A	CNF-018	7/8/93
EOS-DN	-	Primary Structure Layouts	-	CNF-019	6/18/93
EOS-DN	-	Propulsion Module Layouts	-	CNF-020	7/7/93
EOS-DN	-	Flight Operations Management Plan	-	FO-001	6/30/93
Package No. 4				**6 August, 1993**	
VOLUME 1					
ICD-101	1	General Interface Spec. (GIS) for EOS-AM S/C	A	IS20008501	7/30/93
SP-701	2	Performance Spec. Propulsion S/S for EOS-AM S/C	-	PS20008617	8/5/93
SP-702	2	Performance Spec. Propulsion Module for EOS-AM S/C	-	PS20008618	7/30/93
SP-801	2	Performance Spec. GN&C Sensor Equipment Module for EOS-AM S/C	-	PS20001407	7/30/93
SP-801	2	Performance Spec. RWA Equipment Module for EOS-AM S/C	-	PS20001409	7/30/93
SP-801	2	Performance Spec. Power Equip. Module & Battery Panel for EOS-AM S/C	-	PS20001408	8/4/93
SP-801	2	Performance Spec. Recorder Equipment Module for EOS-AM S/C	-	PS20001411	7/30/93
SP-801	2	Performance Spec. C&DH/COMM Equipment Module for EOS-AM S/C	-	PS20008745	7/30/93

DR/DN	TYPE	TITLE	REV	DOCUMENT	DATE
Package No. 4 (Continued)					6 August, 1993
SP-801	2	Performance Spec. DAS Panel for EOS-AM S/C	-	PS20008571	7/30/93
EOS-DN	-	Equip. Module & Installation Top Level Signal Flow Diagrams	A	EAS-007	7/23/93
EOS-DN	-	Propellant Budget for EOS-AM S/C	-	RES-023	7/23/93
VOLUME II					
VRD-105	2	Spacecraft & Subsystem Test Plan for EOS-AM S/C	Prelim	PN20008664	7/30/93
VRD-110	2	Verification Spec. for EOS-AM S/C	A	PS20005404	8/6/93
VRD-800	2	S/C Assembly Plan for EOS-AM S/C	Prelim	PN20005405	7/30/93
SEP-109	2	Energy Balance Model - User's Guide for EOS-AM S/C	-	20008707	*
SEP-120	3	Mass Properties Report for EOS-AM S/C	Prelim	20001390	7/30/93
EOS-DN	-	EOS-AM Spacecraft Thermal Directory	-	TCS-053	7/27/93
-	-	Ground Systems Requirements Database	Prelim	20043119	7/14/93
-	-	Miscellaneous Mechanical Drawings:			
	-	High Gain Antenna MICD	-	MICD20001418	
	-	Solar Array MICD	-	MICD20008514	
	-	Mechanical Layout Dwgs.-Secondary Structure & CPHTS Plumbing	-	-	
VOLUME III					
PA-500	2	Failure Modes, Effects & Critical Analysis (FMECA)	Prelim	20008657	7/30/93
PA-510	2	Critical Items List (CIL)	Prelim	20005652	7/30/93
PA-520	2	Reliability Assessment for EOS-Am S/C	Prelim	20008654	7/30/93
PA-560	3	Limited Life Test	Prelim	20008653	7/30/93
PA-600	2	Fabrication & Assembly Flow Plan	Prelim	20008647	7/30/93

NOTE * Proprietary Document, will be shipped under separate cover.

General Interface Specification (GIS) for EOS–AM Spacecraft (ICD–101)

IS20008501A
CAGE No. 49671
05 August 1993

General Interface Specification (GIS) for the EOS–AM Spacecraft (ICD–101)

Prepared under:
Contract NAS5–32500
NASA Goddard Space Flight Center
Greenbelt, Maryland 20771

Prepared by:
Martin Marietta Corporation
Astro Space
P.O. Box 800
Princeton, New Jersey 08543–0800

DCC050893

(This page intentionally left blank.)

General Interface Specification (GIS) for the EOS–AM Spacecraft (ICD–101)

Prepared under:
Contract NAS5–32500
NASA Goddard Space Flight Center
Greenbelt, Maryland 20771

Prepared by: _____
Erika Kohl
EOS–AM SE&I

Approved by: _____
Scott Carey
EOS–AM SE&I Manager

Approved by: _____
Michael E. Kavka
EOS–AM Program Manager

Approved by: _____
Chris Scolese
EOS–AM Project Manager GSFC

Approved by: _____
Richard Ho
EOS–AM Observatory Manager GSFC

Prepared by:
Martin Marietta Corporation
Astro Space
P.O. Box 800
Princeton, New Jersey 08543–0800

(This page intentionally left blank.)

REVISION LOG

This log identifies those portions of this document which have been revised since the original issue. Revised portions of each page, for the current revision only, are identified by marginal striping.

Revision	Paragraph Number(s) Affected	Rev. Date	Approval
Initial Issue		12/30/92	CM/GSR
A	Revised per ECN EOS0018	08/06/93	CM/GSR

(This page intentionally left blank.)

TABLE OF CONTENTS

SECTION / PARAGRAPH	TITLE	PAGE
1	INTRODUCTION	1
1.1	Scope	1
1.2	Using This Document	1
2	APPLICABLE AND REFERENCE DOCUMENTS	3
2.1	Applicable Documents	3
2.1.1	Government Documents	3
2.1.1.1	NASA Documents	3
2.1.1.2	Military Documents	3
2.1.1.3	Other Government Documents	4
2.1.2	Non–government Documents	4
2.1.2.1	Martin Marietta Astro Space Documents	4
2.1.2.2	Other Documents	4
2.2	Reference Documents	5
2.2.1	Government Documents	5
2.2.2	Martin Marietta Astro Space Documents	5
3	ELECTRICAL INTERFACES	7
3.1	Power	7
3.1.1	Primary Power Interface Definition	7
3.1.1.1	Primary Voltage Range	7
3.1.1.2	Primary Power Source Impedance	7
3.1.1.3	User Power Input Impedance	7
3.1.1.4	Primary Power Transients	8
3.1.1.5	Primary Power Steady–State Voltage Limits	8
3.1.1.6	Primary Power Application and Removal	8
3.1.1.7	Primary Power Fusing	8
3.1.1.8	Primary Power Grounding, Isolation and Returns	9
3.1.1.9	Primary Voltage Corona/Arcing Protection	9
3.1.1.10	Conducted Emissions	9

TABLE OF CONTENTS (Continued)

SECTION / PARAGRAPH	TITLE	PAGE
3.1.2	28 Volt Secondary Power Interface Definition	9
3.1.2.1	Secondary Voltage Range	9
3.1.2.2	Secondary Power Source Impedance	9
3.1.2.3	Secondary Power Transients	9
3.1.2.4	Secondary Power Steady–State Voltage Limits	10
3.1.2.5	Secondary Power Conducted Emissions	10
3.1.3	Transient, Sinewave, and Pulse Noise	10
3.1.3.1	Power Line Transients and Noise	10
3.1.3.2	Reserved	10
3.1.3.3	Primary Power Current Transients	10
3.1.3.4	Reserved	10
3.1.4	Sneak Paths	10
3.2	Grounds, Returns, and References	11
3.2.1	Power Leads and Returns	13
3.2.1.1	Power Harnessing	13
3.2.1.2	Isolation	13
3.2.1.3	Power Reference	13
3.2.2	Signal Leads and Returns	14
3.2.2.1	Relay Drive Command Leads	14
3.2.2.2	Differential Signal Isolation	14
3.2.2.3	Signal Reference Constraints	14
3.2.3	Component Grounding	14
3.2.3.1	Component Ground Location	14
3.2.3.2	Component Ground Connection	15
3.2.3.3	Component Chassis Reference	15
3.2.3.4	Component Internal Grounding	15
3.2.3.5	Component Bonding Straps	15
3.2.3.6	Connector Grounding	15
3.2.3.7	Chassis Reference Current	15
3.2.3.8	Harness Shield Grounding	16

TABLE OF CONTENTS (Continued)

SECTION / PARAGRAPH	TITLE	PAGE
3.2.3.9	RF Component Grounds	16
3.2.4	Equipment Module Chassis Ground	16
3.2.5	Fault Ground	16
3.2.5.1	Component Fault Ground Requirements	16
3.2.5.2	Equipment Module Fault Grounds	17
3.2.5.3	Fault Ground Requirements	17
3.2.6	Component Referencing to Signal Reference Plane	17
3.3	Standard Signal Interfaces	17
3.3.1	Telemetry Availability	17
3.3.2	Standard Interface Circuits	17
3.3.2.1	Applicability	17
3.3.2.2	Digital Circuit Usage	18
3.3.2.3	Component Internal Redundancy	18
3.3.2.4	Hysteresis	18
3.3.2.5	Short–Circuit Protection	18
3.3.2.6	Input Protection	18
3.3.2.7	Signal Polarity	18
3.3.2.8	Standard Digital Interfaces	18
3.3.2.9	Relay Drivers	21
3.3.2.10	Analog Telemetry Interfaces	21
3.3.2.11	Active and Passive Bi–level Interfaces	23
3.3.3	Point–to–Point Command and Telemetry Serial I/O Interfaces	28
3.3.3.1	Interface Lines	28
3.3.3.2	Input (Command) Protocol and Timing	28
3.3.3.3	Output (Telemetry) Protocol and Timing	28
3.3.3.4	Initialization	34
3.3.4	Point–to–Point Command Interfaces	34
3.3.4.1	Toggle Commands Ban	34
3.3.4.2	Point–to–Point Logic Level Command Lines	34
3.4	Electroexplosive (EED) Devices	34

TABLE OF CONTENTS (Continued)

SECTION / PARAGRAPH	TITLE	PAGE
3.4.1	Maximum Simultaneous Firings	34
3.4.2	EED Initiators	34
3.5	Test Points	34
3.5.1	Test Point Interfaces	34
3.5.1.1	Integration and Test Use	35
3.5.1.2	Performance Verification Limitation	35
3.5.1.3	Keyed Connectors	35
3.5.1.4	Power and Load Isolation	35
3.5.1.5	Measurement Accuracy	35
3.5.1.6	Failure Propagation	36
3.5.1.7	Short–Circuit Isolation	36
3.5.1.8	Grounding Integrity	36
3.5.1.9	EMI/EMC	36
3.5.2	Test Point Interface Documentation	36
3.6	Connectors and Contact Allocations	36
3.6.1	Connector Mounting Surface	36
3.6.2	Allowable Connector Types	36
3.6.3	Connector Shell Grounding	36
3.6.4	Spacing Between Connectors	37
3.6.5	Connector Keying and Identification	38
3.6.6	Contact/Socket Usage	38
3.6.7	Signal Category Segregation	38
3.6.8	Redundant Signal Segregation	38
3.6.9	Contact Allocation	38
3.6.9.1	Power and Grounds	39
3.6.9.2	Relay Drive Command Contacts	39
3.6.9.3	Chassis Ground Contact	39
3.6.9.4	Shield Ground Contact	39
3.6.9.5	Signal Return Contact	39
3.6.9.6	Spare Contacts	39

TABLE OF CONTENTS (Continued)

SECTION / PARAGRAPH	TITLE	PAGE
3.6.10	Connector Caps	39
3.7	Workmanship	39
4	MECHANICAL INTERFACES	41
4.1	Coordinate Systems	41
4.2	Component Physical Characteristics	41
4.2.1	Component Size	41
4.2.2	Reserved	41
4.2.3	Reserved	41
4.2.4	Reserved	41
4.2.5	Component Uncompensated Momentum	41
4.3	Design and Construction	41
4.3.1	General	41
4.3.2	Identification and Marking	43
4.3.2.1	General	43
4.3.2.2	Physical Characteristics	43
4.3.2.3	Content	43
4.3.3	Finish	44
4.3.3.1	Component Mounting Surface	44
4.3.3.2	Mounting Surface for Electrical Interface Connectors	44
4.3.4	Component Case Design	44
4.3.5	Non–Flight Protective Covers	44
4.3.6	Flight Protective Covers	45
4.3.7	Venting	45
4.3.8	Interchangeability	45
4.3.9	Drawing Terms and Tolerances	45
4.4	Component Mounting	46
4.4.1	General	46
4.4.2	Equipment Module Mounted Components	46
4.4.3	Instrument Accommodation Equipment Mounting	46

TABLE OF CONTENTS (Continued)

SECTION / PARAGRAPH	TITLE	PAGE
4.4.4	Direct Mounting Major Assemblies	46
4.4.5	Mounting Surface Flatness and Finish	46
4.4.6	Mounting Hole Position and Tolerance	47
4.5	Hardware Layouts	47
4.5.1	Accessibility	47
4.5.2	Location of Sensitive Components	47
4.6	Alignment	47
4.6.1	General	47
4.6.2	Alignment Measurement	47
4.6.3	Alignment Cubes/Mirrors	48
4.7	Mechanisms	48
4.7.1	Caging	48
4.7.2	Electro-Explosive Devices (EEDs)	48
4.8	Launch Configuration Dynamic Characteristics	48
4.9	Structural Criteria	49
4.9.1	Design Factors of Safety	49
4.9.1.1	Pressurized Equipment	49
4.10	Tooling	51
4.10.1	Optical Tooling	51
4.10.2	Handling Fixture	51
4.10.3	Materials, Processes, and Parts	51
4.10.3.1	Approved Standard Parts, Materials and Finishes	51
4.10.3.2	Properties of Materials	51
4.10.3.3	Stress Corrosion	52
4.10.3.4	Magnetic Materials	52
5	THERMAL INTERFACES	53
5.1	General Thermal Control Concept	53
5.1.1	Spacecraft Thermal Control Subsystem	53
5.2	Spacecraft/Component Thermal Interfaces	53

TABLE OF CONTENTS (Continued)

SECTION / PARAGRAPH	TITLE	PAGE
5.2.1	Equipment Module/Component Thermal Interfaces	53
5.2.1.1	Equipment Module/Component Conductive Interfaces	53
5.2.1.2	Equipment Module/Component Radiative Interfaces	53
5.2.2	Instrument Accommodation Equipment Thermal Interfaces	54
5.2.2.1	Thermal Isolation Requirements	54
5.2.3	Distributed Housekeeping Equipment Thermal Interfaces	54
5.3	Environmental Flux Parameters	54
5.4	Thermal Control Hardware	54
5.4.1	Heaters	54
5.4.1.1	Heater Margin	54
5.4.1.2	Heater Control	54
5.4.2	Multilayer Insulation	54
5.4.2.1	MLI Bakeout	54
5.4.3	Thermal Control Coatings	55
5.4.4	Temperature Sensors	55
5.5	Spacecraft Equipment Temperature Requirements	55
6	ENVIRONMENTAL INTERFACES	57
6.1	General Requirements	57
6.1.1	Electromagnetic Interference (EMI)	57
6.1.1.1	Electric Fields	57
6.1.1.2	Magnetic Fields	57
6.2	Mission Environment	57
6.2.1	General	58
6.2.1.2	Cleanliness	58
6.2.1.3	Temperature and Humidity	58
6.2.2	Storage Environment	58
6.2.3	Transportation and Handling Accelerations	58
6.2.3.1	Transportation	58
6.2.3.2	Handling Shock	59

TABLE OF CONTENTS (Continued)

SECTION / PARAGRAPH	TITLE	PAGE
6.2.4	On–Pad Environment	59
6.2.4.1	Temperature	59
6.2.4.2	Lightning	59
6.3	Launch and Ascent Environment	59
6.3.1	Thermal	59
6.3.1.1	Internal Payload Fairing Temperatures	59
6.3.1.2	Free Molecular Heating	59
6.3.2	Pressure	60
6.3.3	Acceleration	60
6.3.4	Acoustic Field	62
6.3.5	Random Vibration	62
6.3.6	Sine Vibration	62
6.3.7	Shock	63
6.3.8	Contamination Control	63
6.3.9	Corona Discharge Avoidance	63
6.3.10	Resistance to Lightning	64
6.4	On–Orbit Environment	64
6.4.1	On–orbit Shock	65
6.4.2	Thermal	65
6.4.3	Beta Angles	65
6.4.4	Pressure	65
6.4.5	Acceleration	65
6.4.6	Charged Particles	65
6.4.6.1	Single Event Upset	67
6.4.6.2	Solar Flare Protons	67
6.4.6.3	Trapped Protons	67
6.4.6.4	Cosmic Ray Charged Particles	67
6.4.6.5	Single Event Latchup (SEL)	70
6.4.7	Micrometeoroids and Space Debris	70
6.4.7.1	Micrometeoroids	70

TABLE OF CONTENTS (Continued)

SECTION / PARAGRAPH	TITLE	PAGE
6.4.7.2	Space Debris	70
6.4.8	Contamination	70
6.4.8.1	Propulsion System By–Products	73
6.4.8.2	Materials Outgassing	73
6.4.8.3	Atomic Oxygen	74
6.4.9	Plasma Interaction Effects	74
6.4.10	Sun–Pointing Safe Mode	74
7	ACRONYM LIST	77

LIST OF FIGURES

FIGURE	TITLE	PAGE
1	EOS–AM Spacecraft Specification Tree	2
2	Secondary Electronics Grounding and Data Interface Concept	12
3	RS–422 Standard Interface Circuit	19
4	ECL Interface Circuit	20
5	Relay Driver Standard Interface Circuit	22
6	Standard Passive Analog Interface Circuit	24
7	Standard Active Analog Interface Circuit	25
8	Standard Passive Bi–Level Telemetry Interface Circuit	26
9	Standard Active Bi–Level Telemetry Interface Circuit	27
10	Synchronous I/O Interface	29
11	Differential Signal Conventions	30
12	BDU to User (RS–422)	31
13	User to BDU (RS–422)	32
14	Serial Timing and Control Line State	33
15	EOS Spacecraft Coordinate System	42
16	Near–Field Lightning Environment	60
17	Fairing Transient Temperature Profiles	61
18	Predicted Limit Loads	62
19	Corona Discharge Threshold Levels	64
20	Total Ionizing Dose Radiation Environment	66
21	Solar Flare Proton Fluence	68
22	Daily Average Trapped Proton Flux	68
23	Cosmic Ray Linear Energy Transfer (LET) Spectrum	69
24	Meteoroid Fluence	71
25	Space Debris Fluence	72

LIST OF TABLES

TABLE	TITLE	PAGE
I	ECL Interface Characteristics	21
II	Preferred Connector Types	37
III	Factors of Safety for Pressurized Equipment	50
IV	Spacecraft Equipment Temperature Requirements	55
V	Temperature/Humidity Limits	58
VI	Maximum Expected Flight Acoustic Levels	63
VII	Multiples for Space Debris Fluence on Oriented Surfaces (i.e., Surfaces with a Specified Attitude)	73
VIII	Plume Byproducts from Hydrazine Thrusters*	74
IX	Plasma Environment	74

TBD LOG

ITEM	SECTION	PAGE	SUBJECT	RESP.	DUE
TBD–1	Table II	37	Preferred Rectangular Connectors	S. Holaday	9/30/93

TBR LOG

ITEM	SECTION	PAGE	SUBJECT	RESP.	DUE
TBR–1	3.1.1.3.2	8	User Differential Mode Impedence	Callen/Schaefer	9/30/93
TBR–2	Figure 14	33	Command Enable–N Pulse Duration	A. Baccala	9/30/93

(This page intentionally left blank.)

1 INTRODUCTION

1.1 Scope

The General Interface Specification (GIS) defines electrical, mechanical, thermal, and environmental requirements which are common to many of the Spacecraft bus elements. The requirements contained herein define standard interfaces between the various Spacecraft bus subsystems and Spacecraft bus users of those subsystem's services. Environmental requirements are also specified herein. They provide the extremes of the environmental conditions expected during integration, storage, transportation, pre–launch, launch and ascent, and on–orbit life. They also define restrictions on the contributions components can make to generating certain environments. These environments form the basis against which the Verification Specification defines the test levels for the various Spacecraft elements.

The intent of this specification is to provide a consolidation of design requirements which are common to multiple components of the Spacecraft bus such that specifications can invoke common requirements simply by referencing the GIS. Spacecraft bus–to–instrument interfaces are defined in the General Instrument Interface Specification (GIIS). Unique interfaces are defined in the relevant component and assembly performance specifications.

1.2 Using This Document

Component and assembly performance specifications are ultimately responsible for defining the interfaces for each Spacecraft bus element. Requirements in those documents supercede the requirements contained herein. Deviations from the GIS must be listed in section 6 of the non–conforming spacecraft equipment's performance specification. The GIS provides definition of most common interface requirements and, as such, should be referenced as appropriate to complete interface definition.

The GIS resides in the specification tree as shown in Figure 1. GIS requirements can flow to the components through the subsystem specifications just as the CEI requirements do. Some of the GIS requirements are imposed on the subsystems via GIS references in the CEI. The subsystems then flow these requirements down to the components. Other GIS requirements are cited first at the subsystem specification level, and some are cited only at the component specification level.

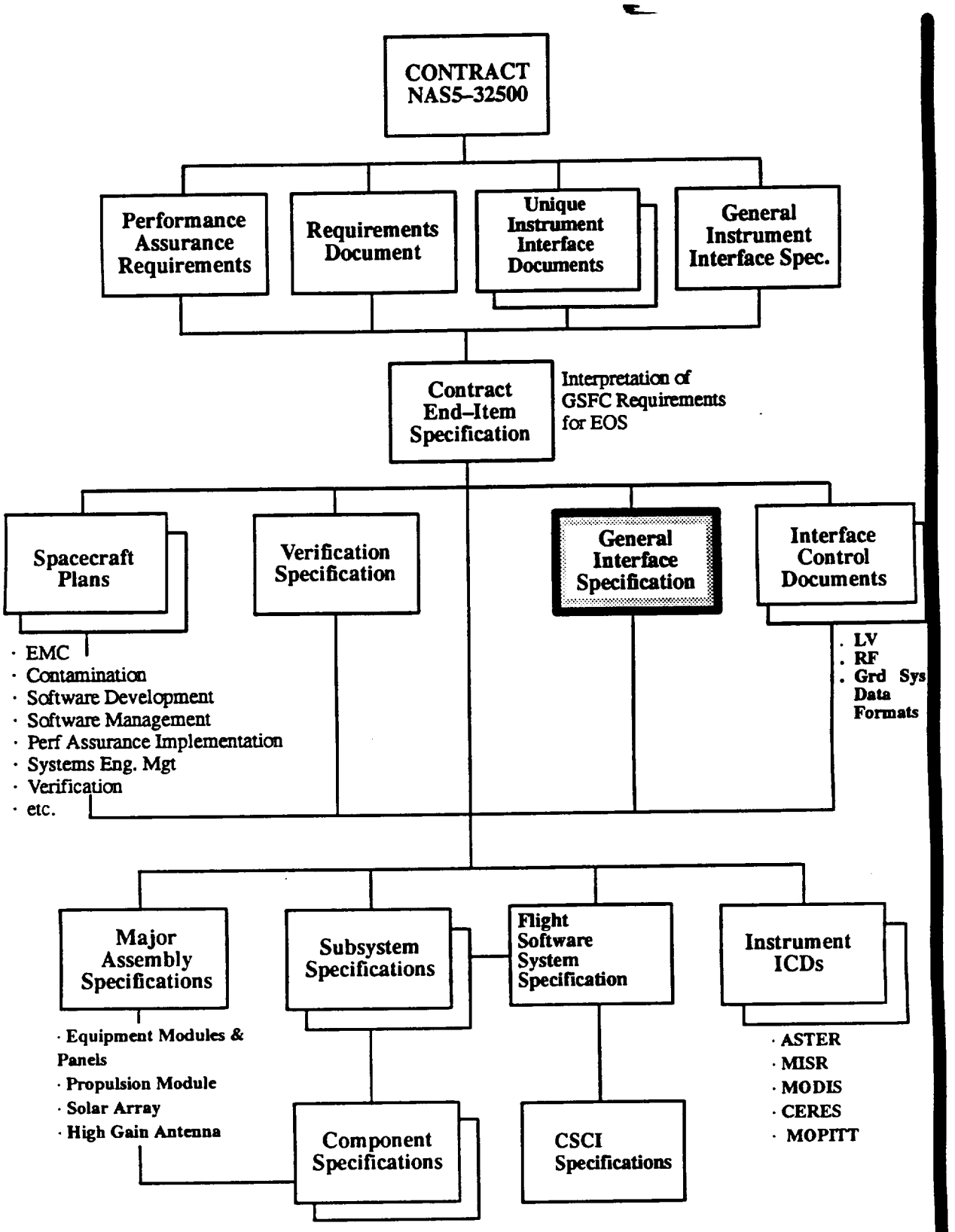

Figure 1. EOS-AM Spacecraft Specification Tree

2 APPLICABLE AND REFERENCE DOCUMENTS

The following documents of the exact issue shown, form a part of this specification to the extent specified herein.

2.1 Applicable Documents

2.1.1 Government Documents

2.1.1.1 NASA Documents

GSFC 731–0005–83B November 1988	General Fracture Control Plan for Payloads using the Space Transportation System (STS)
MSFC–SPEC–522B November 1977	Design Criteria for Controlling Stress Corrosion Cracking
NHB 5300.4 (3A–1) December 1976	Requirements for Soldered Electrical Connections, Change 1
NHB 5300.4 (3G) April 1985	Requirements for Interconnecting Cables, Harnesses, and Wiring
NHB 5300.4 (3H) May 1984	Requirements for Crimping and Wire Wrap
NHB 5300.4 (3I) May 1984	Requirements for Printed Wiring Boards
NHB 5300.4 (3J) April 1985	Requirements for Conformal Coating and Staking of Printed Wiring Boards and Electronic Assemblies
NHB 5300.4 (3K) January 1986	Requirements for Rigid Printed Wiring Boards and Assemblies
NHB 6000.1C June 1976	Requirements for Packaging, Handling, and Transportation for Aeronautical and Space Systems Equipment, and Associated Components

2.1.1.2 Military Documents

MIL–HDBK–5E, May 1989	Military Handbook, Metallic Materials and Elements for Aerospace Vehicle Structures, Change 2
MIL–HDBK–17B, September 1977	Military Handbook, Polymer Matrix Composites Vol. 1, Change 1

MIL–STD–129L 15 October 1990	Marking for Shipment and Storage
MIL–STD–810B Notice 2 21 September 1976	Environmental Test Methods, 25 Jun 1967, with (11), Change 4
MIL–STD–889A November 1979	Dissimilar Metals, 7 Jul 1976; Notice 1, 22
MIL–STD–1522A 28 May 1984	Standard General Requirements for Safe Design and Operation of Pressurized Missile and Space Systems

2.1.1.3 Other Government Documents

FED–STD–209	Clean Room and Work Station Requirements Controlled Environment

2.1.2 Non–government Documents

2.1.2.1 Martin Marietta Astro Space Documents

PN20001412 12 May 1992	Contamination Control Plan (SEP–107)
PN20005869 15 Jan 93	EOS Observatory Electromagnetic Compatibility (EMC) Control Plan (SEP–106)
PS20005404 31 Dec 92	Verification Specification (VRD–110)
20008648	EOS Program Approved Parts List (PA–325)
20008650	EOS Program Approved Materials and Processes Selection List (PA–460)
S30009	Drawing Terms and Shop Run Tolerances
S32534 (Rev E)	Standard for Identification Marking
20004013	Kinematic Mount Interface Drawing – Equipment Module
Source:	Martin Marietta Astro Space P. O. Box 800 Princeton, NJ 08543–0800

2.1.2.2 Other Documents

National Semiconductor, 400028	F100K ECL Logic Databook and Design Guide. 1990 Edition

EIA RS–422–A December 1978	Electrical Characteristics of Balanced Voltage Digital Interface Circuits
Source:	Electronic Industries Association Engineering Dept 2001 Eye Street N.W. Washington, D.C. 20006

2.2 Reference Documents

The following documents are not referenced herein but are applicable to all or many of the Spacecraft components. Applicability of the requirements in these documents to a given component is defined in the respective subsystem and components specifications.

2.2.1 Government Documents

GSFC 421–10–01 ch–01 30 Oct 92	Requirements Document (RD) for the EOS–AM Spacecraft
GSFC 420–05–02B ch–01 13 Nov 92	Product Assurance Requirements for the EOS–AM Spacecraft
GSFC 420–03–02 1 Dec 92	General Instrument Interface Specification for the EOS Observatory
WSMCR 127–1 15 December 1989	Range Safety Requirements

2.2.2 Martin Marietta Astro Space Documents

PS20005396	Contract End Item Specification (SEP–101)
PS20008598	EOS Electrical Power Conditioner Component Performance Specification
20005400	Electromagnetic Compatibility (EMC) Design Handbook for the EOS–AM Spacecraft
S30009, Rev A	Drawing Terms and Shop Run Tolerances Interpretation
3267202	Initiator, Pyrotechnic

(This page intentionally left blank.)

3 ELECTRICAL INTERFACES

Component specification authors shall note exceptions to this specification in Section 6 of their respective component specifications.

3.1 Power

The electrical performance of the EPS is specified for either primary or secondary power users. Requirements for primary user type interfaces are described in Section 3.1.1, Primary Power Interface Definition. Requirements for secondary user type interfaces are described in Section 3.1.2, Secondary Power Interface Definition.

3.1.1 Primary Power Interface Definition

Unless stated otherwise, all primary power interface requirements in this specification apply to the power as measured at the component input connectors within the equipment module or assembly.

[1] Components which require primary power and are internally functionally redundant shall accept primary power delivered on a separate feed to each redundant side.

[2] Components which require primary power and are not internally functionally redundant shall accept primary power delivered on a single feed.

3.1.1.1 Primary Voltage Range

The component shall operate within specification when supplied with regulated +120 volts (V) ±4% dc power.

3.1.1.2 Primary Power Source Impedance

[1] The Spacecraft primary power source impedance at the user interface shall be equivalent to a series combination of resistance less than or equal to 0.8 ohms and an inductance of 2.5 μH (with a resulting corner frequency of 51 kHz) over the frequency range of dc to 150 kHz.

3.1.1.3 User Power Input Impedance

The user's prime power input filter shall present a symmetrical common mode and differential mode impedance to the prime power bus.

3.1.1.3.1 User Common Mode Impedance

[1] The component common mode impedance (line or return to chassis) shall be ≥ 160 ohms at frequencies from 100 kHz to 10 MHz.
[2] The component common mode impedance shall generally increase in magnitude as frequency increases.

3.1.1.3.2 User Differential Mode Impedance

The component differential mode impedance (Z_{dm}) between DC and 10 kHz shall be greater than or a minimum impedance (Z_{min}) where Z_{min} is calculated using the following equation:

$$Z_{min} = \frac{2500\ (TBR-1)}{P_{input}\ (Max)} \times Z_{ref}$$

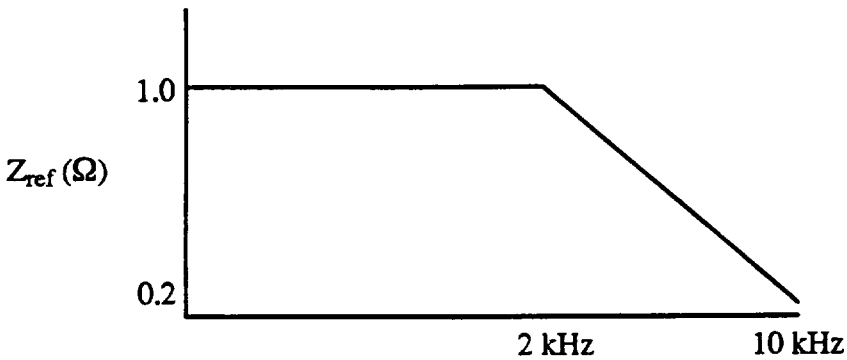

Z_{min} – minimum allowed differential mode impedance
Z_{dm} – differential mode impedance
P_{input}(Max) – maximum input power allocated to component in Watts; Note: P_{input} is never less than 40W.
Z_{ref} – reference impedance curve
*Peak power does not include transients with a duration < 20 milli–seconds

3.1.1.4 Primary Power Transients

All components operating from a primary power supply shall meet the operate and survive power transient requirements of section 3.1.3.

3.1.1.5 Primary Power Steady–State Voltage Limits

Under abnormal conditions the component shall survive, without permanent degradation, steady–state bus voltages (V) in the range:

$$0 \leq V \leq 132 \text{ Vdc}$$

3.1.1.6 Primary Power Application and Removal

Internally redundant components shall not suffer damage under
[1] simultaneous application of both primary power feeds,
[2] application of only one primary power feed, or
[3] removal of either or both primary power feeds.

3.1.1.7 Primary Power Fusing

The EPS shall provide fusing to protect the power system and Spacecraft harness from user faults.

3.1.1.8 Primary Power Grounding, Isolation and Returns

Primary Power Grounding, Isolation and Returns shall be in accordance with the requirements of 3.2.1 and its subordinate paragraphs.

3.1.1.9 Primary Voltage Corona/Arcing Protection

Components powered by primary power during launch shall employ sufficient protection (such as potting or other insulation measures and proper spacing of electrodes) to preclude corona discharge and arcing caused by partial pressurization inside the launch vehicle. (see para 6.3.9 and Figure 19 for dielectric breakdown levels.)

3.1.1.10 Conducted Emissions

Components using primary power shall limit their conducted emissions as defined in the Equipment Conducted Emissions section of the EMC Control Plan, PN20005869.

3.1.2 28 Volt Secondary Power Interface Definition

All secondary power requirements in this specification apply at the component input connectors within the equipment module or assembly. These requirements apply to users of 28 Volt secondary power supplied by the EPS.

[1] Components which require 28 Volt secondary power and are internally functionally redundant shall accept secondary power delivered on a separate feed to each redundant side. [2] Components which require 28 Volt secondary power and are not internally functionally redundant shall accept secondary power delivered on a single feed.

3.1.2.1 Secondary Voltage Range

Components requiring secondary power shall operate within specification when supplied with regulated +28.0 ±2% Vdc power.

3.1.2.2 Secondary Power Source Impedance

[1] The EAS shall ensure that the impedance of the secondary power source as measured at the user interface for users whose cable length to the secondary power source is 10 feet or less is less than 0.4 ohms at dc increasing at a 750 μH slope up to 300 Hz, then 1.5 ohms from 300 Hz to 100 kHz, then increasing at a 0.7 μH slope from 100 kHz to 1 MHz. (Users who occupy the same equipment module as the power source may assume cable lengths of 10 feet or less)
[2] The EAS shall ensure that the impedance of the secondary power source as measured at the user interface for users whose cable length to the secondary power source is between 10 feet and 40 feet is less than 0.9 ohms at dc increasing at a 1000 μH slope from 300 Hz to 100 kHz, then increasing at a 2.0 μH slope from 100 kHz to 1 MHz.

3.1.2.3 Secondary Power Transients

Components powered by secondary power shall meet the operate and survive power transient requirements of section 3.1.3.
Where component powered by secondary power has its own dedicated EPC the conducted emissions/susceptibility performance may be qualified as a combined unit.

3.1.2.4 Secondary Power Steady–State Voltage Limits

All components shall survive, without permanent degradation, a steady state input voltage between 0 V and 35 V.

3.1.2.5 Secondary Power Conducted Emissions

The peak–to–peak amplitude of steady–state load current ripple generated by the component shall meet the Secondary Power Users Reflected Ripple and Noise limits identified in the Equipment EMI Requirements section of the EMC Control Plan, PN20005869.

3.1.3 Transient, Sinewave, and Pulse Noise

These requirements are valid for both primary and secondary power supplies unless stated otherwise.

3.1.3.1 Power Line Transients and Noise

The Spacecraft equipment shall meet the conductive susceptibility requirements specified in the EMC Control Plan, PN20005869, Equipment Conducted Susceptibility section (the CS01, CS02, and CS06 requirements).

3.1.3.2 Reserved

3.1.3.3 Primary Power Current Transients

The following requirements apply only to components using primary (120Vdc) Spacecraft power.

[1] Component current peaks associated with both turn–on inrush current and non–repetitive operational current transients shall not exceed 200% of the component steady–state peak power current between 50 microseconds (μsec) and 10 milliseconds (msec) after the start of the transient and
[2] shall return to steady state within 10 msec from the time of the peak of the transient.
[3] The component shall limit current transient rate of change to $\leq$20 milliamps (mA)/μsec except during fault conditions.
[4] The component shall limit turn–on inrush current transient rate of change to $\leq$50 mA/μsec.
[5] The component shall limit turn–off current transient rate of change to $\leq$50 mA/μsec.

3.1.3.4 Reserved

3.1.4 Sneak Paths

[1] "Sneak Paths", as defined below, between powered and unpowered components and between powered and unpowered sections of a component shall be avoided, if possible. A sneak path is defined as an unintentional current and voltage developed in an unpowered circuit as a result of being connected to a powered circuit.

[2] Where a sneak path is unavoidable, no sneak path shall cause the unintended execution of any Spacecraft function,*

[3] nor shall it inhibit the execution of any intended Spacecraft function.*

[4] The power supply shall supply sufficient power for the operation of the on circuit in the presence of sneak path(s) through off circuit(s).

*Note: When the GIS–specified RS–422 interface is implemented with the HS26CT31/32 driver/receiver pair, a driver in its on state can induce sneak path currents between .2 mA at 650 mV and 1.5 mA at 50 mV per quad pack to a receiver in its off state. This is considered acceptable and the component need not conduct a sneak path analysis for this case.

3.2 Grounds, Returns, and References

The grounding concept described herein is illustrated in Figure 2

The following terms are defined to facilitate specification of the ground, return, reference and bonding requirements which are specified starting with Section 3.2.1:

Bond: A low–impedance electrical connection between two conductive elements.

Chassis Reference: The point within any Spacecraft equipment at which signal reference and secondary power return leads are referenced to the equipment chassis.

Fault Ground: A conductor intended to carry fault currents in the event that the 120 Vdc input is short–circuited in the component.

Component Chassis: The metal enclosure which shields the component's electronics.

Component Chassis Ground Terminal: External connection to the component's chassis reference.

Isolated Secondary Power: Secondary power whose loads are completely isolated from the component's signal interface electronics.

Prime Power Reference: The point on the Spacecraft where all primary power returns are referenced. The Prime Power Reference is the reference point for Spacecraft voltage control.

Primary Power Return: The isolated 120 V current return lead from the primary power interface back to the power source.

Secondary Power: Power which has been derived and isolated from primary power. Secondary power is typically derived using a dc–to–dc converter .

Secondary Power Reference: The point within any Spacecraft equipment where all current returns from the secondary power (except isolated secondary power) circuits are referenced.

Signal Reference: The reference within the component for digital and analog signals.

Signal Reference Plane: The designated conductive surface, distributed throughout the Spacecraft, to which all references are connected.

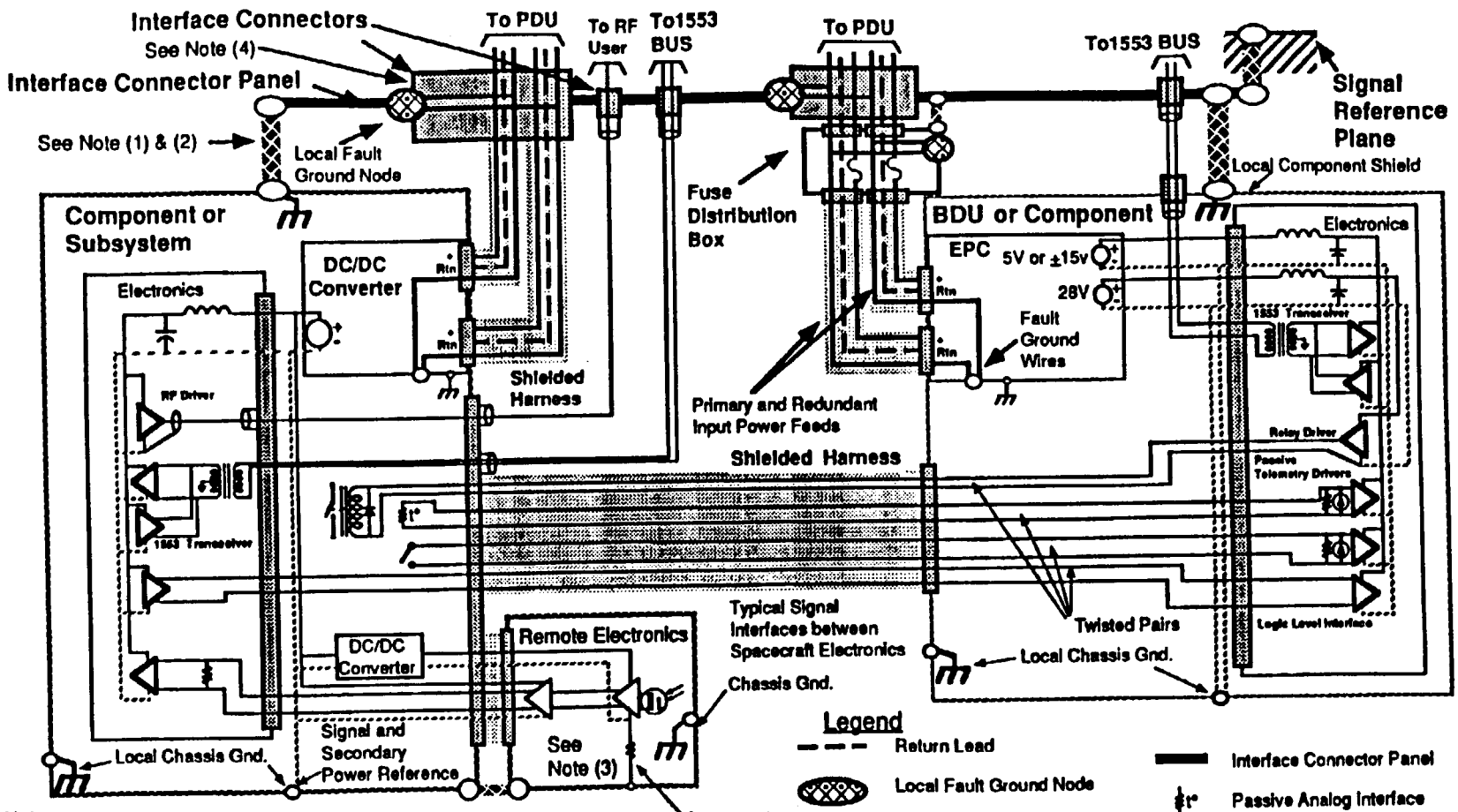

Notes

(1) The low impedance electrical bond paths to the Interface Connector Panel is custom developed for each Equipment Installation.

(2) The RF ground path to the Signal Reference Plane is provided by mechanical bonds between the Interface Connector Panel and the Signal Reference Plane.

(3) An example of how isolated DC power may be used to implement a specific chassis ground or reference impedance at the sensor or similar circuit.

(4) Fault Ground wires are bonded to the connector shell and Interface Connector Panel in the connector half which is permanently bonded to the Interface Connector Panel.

PDU = Power Distribution Unit, BDU = Bus Data Unit, EPC = Electrical Power Conditioner
SFE = Science Formating Electronics

Figure 2. Secondary Electronics Grounding and Data Interface Concept

Signal Return: The wire which carries the current of a digital or analog signal back to its source.

3.2.1 Power Leads and Returns

Each component primary power lead shall have a distinct, separate, and isolated return. Power on the primary feed shall be returned only on the primary return, and power on the redundant feed shall be returned only on the redundant return.

3.2.1.1 Power Harnessing

The EAS shall route, and each component shall accept, primary power return and fault conductor in an electrically shielded harness with the primary power supply lead.

3.2.1.2 Isolation

Isolation requirements from primary power to chassis and primary power to secondary power shall be adhered to at each primary power input.

3.2.1.2.1 Reserved

3.2.1.2.2 120 V Primary Power Isolation

[1] The component shall ensure that the 120 V primary power leads and returns are each isolated from signal and chassis references by $>10^6$ ohms (dc) and <0.5 microfarad when measured at the component input.
[2] Circuits employing transient protection devices shall have a dc isolation from chassis ground greater than 0.2 megohms.
[3] The user shall maintain an isolation greater than 100 kilohm dc resistance and less than 0.5 microfarads between redundant power feeds and between the returns at the user power input.

3.2.1.2.3 Secondary Power Isolation

Secondary power shall be isolated from 120 Vdc primary power by $>10^6$ ohms (dc) at the primary power input.

3.2.1.2.4 EED Power Isolation

[1] Signal connections for EEDs shall be isolated from chassis ground at the EED end by greater than 2 megohm dc resistance.
[2] Firing signal conductors for EEDs at the EED end of the harness shall be isolated from chassis ground at the drive end by between 10 kilohms and 2 megohms dc resistance.

3.2.1.3 Power Reference

3.2.1.3.1 Prime Power Reference

The EPS shall reference 120 Vdc power returns to the Signal Reference Plane only at the Spacecraft Prime Power Reference point.

3.2.1.3.2 Secondary Power Return

Components shall provide a current return lead from each component part which utilizes secondary power.

3.2.1.3.3 Secondary Power Reference

The component shall bond the Secondary Power Return to a chassis reference.
Secondary power returns to the EPS can be referenced at the component chassis reference or at the power source chassis reference. (Preference is for power source chassis reference.)

3.2.1.3.4 Isolated Secondary Power Referencing

If isolated secondary power is used within the component, then isolated returns shall be connected to chassis reference through a resistance selected by the component.

3.2.2 Signal Leads and Returns

Signal leads and their corresponding returns shall be routed together and shall be placed in the same connector along with their corresponding shields.

3.2.2.1 Relay Drive Command Leads

[1] The component shall use a separate conductor for the return of current in relay coils.
[2] Relay coils shall not be referenced to the equipment module chassis ground connection.
[3] The signal and return connections for relay drive commands shall be isolated from chassis at the relay coil end by greater than 1 megohm dc resistance and less than 0.01 microfarad capacitance.
[4] The components and the harness shall each maintain this primary and return isolation.
[5] The return connection for relay drive commands shall be referenced to chassis at the driver end
[6] When multiple relay driver leads are routed to the components, the component shall provide one return lead per eight feed leads with a minimum of two return leads per connector.

3.2.2.2 Differential Signal Isolation

The component shall isolate differential receiver signal leads from component chassis reference by >3 kilohms and <0.01 microfarad. This applies to both digital and analog active circuits.

3.2.2.3 Signal Reference Constraints

[1] The component shall be designed such that the Secondary Power Reference and the signal reference for Spacecraft interface circuits are electrically the same point.
[2] Neither signal nor chassis reference points shall be used as power conductors.

3.2.3 Component Grounding

3.2.3.1 Component Ground Location

The component shall provide a designated chassis ground terminal on each component, as close to the component mounting surface as possible.

3.2.3.2 Component Ground Connection

The EAS shall electrically bond the chassis ground terminal of each component to the equipment module chassis, panel chassis, or signal reference plane.

3.2.3.3 Component Chassis Reference

[1] Each component chassis shall be bonded to the equipment module's chassis by less than 2.5 mΩ dc resistance.
[2] Components with vibration, thermal, or other isolation requirements between the equipment module and component chassis shall use a bonding strap to provide an electrical bond of less than 2.5 mΩ dc resistance.

3.2.3.4 Component Internal Grounding

[1] Electronic circuitry shall be packaged in an enclosure which shall have one point designated internally to be the chassis reference point.
[2] The chassis reference point shall be located on the part of the enclosure where the chassis is bonded to the equipment module structure.
[3] Each of these types of signal shall use a separate wire to reference its circuits to the chassis reference point. These circuits include but are not limited to the following types:

a. Analog circuits

b. Digital circuits

c. Relay Drive (as specified by 3.2.2.1[3])

d. Isolated Power (as specified by 3.2.1.3.4)

3.2.3.5 Component Bonding Straps

Where direct contact is not possible between surfaces and/or movable metal–to–metal joints are present, bonding straps shall be used.

3.2.3.6 Connector Grounding

The component shall electrically bond all component interface connectors to the component chassis in accordance with the Connector and Shield Bonding requirements in the Spacecraft Equipment EMC portion of the EMC Control Plan, PN20005869.

3.2.3.7 Chassis Reference Current

[1] Components shall not use their chassis reference to conduct power and signal currents under non–fault conditions.
[2] Components shall not use equipment module chassis ground to conduct power and signal currents under normal operating conditions.

3.2.3.8 Harness Shield Grounding

Chassis shall be used as the shield reference for the outer shield of triaxial, coaxial, and twinaxial cables which interface with the component.

3.2.3.9 RF Component Grounds

[1] For RF components mounted within an equipment module or a panel, the component RF signal and chassis ground connection to the equipment module or panel chassis ground shall be made through the mounting surfaces and mounting hardware of the component.
[2] For RF components mounted on the Spacecraft core assembly, the chassis ground shall be connected directly to the SRP or PPR.

3.2.4 Equipment Module Chassis Ground

[1] Each equipment module chassis shall have a ground point bonded to the SRP with less than 2.5 milliohms dc resistance.
[2] Each equipment module panel–to–panel interface shall be bonded together with less than 2.5 milliohms dc resistance.

3.2.5 Fault Ground

3.2.5.1 Component Fault Ground Requirements

3.2.5.1.1 Component Fault Ground Connection

[1] The component shall provide a designated fault ground contact at each prime power input connector.
[2] Each component which distributes 120 volt power to other spacecraft bus components shall provide a contact in the power output connector for a fault ground wire from each component to which it distributes power.
[3] The component shall then connect the above fault ground contact to the component chassis reference.

3.2.5.1.2 Component Fault Ground Routing

The component shall route a fault ground wire with each prime power lead to each part within the component which uses prime power.

3.2.5.1.3 Component Fault Ground Wire Grounding

The component shall connect the fault ground wire to chassis at the prime power input for that component.

3.2.5.2 Equipment Module Fault Grounds

3.2.5.2.1 Local Fault Ground

[1] The equipment module chassis reference point shall be the local fault ground and fault ground wires (green wires) shall be routed from this point to every component which utilizes primary power.
[2] Each component requiring a fault ground shall have a separate conductor bonded to the equipment module chassis reference point.
[3] The fault ground wire shall be routed with the prime power interconnection leads.

3.2.5.3 Fault Ground Requirements

3.2.5.3.1 Fault Ground Routing

The EAS shall route a fault ground wire with each prime power feed and return.

3.2.5.3.2 Fault Ground Wire Connection to Primary Power Reference

The EAS shall ensure that each component fault ground wire is referenced to the Primary Power Reference.

3.2.6 Component Referencing to Signal Reference Plane

The EAS shall ensure that each component's chassis reference is referenced to the Signal Reference Plane (SRP).

3.3 Standard Signal Interfaces

3.3.1 Telemetry Availability

[1] All component telemetry shall be available for sampling at least once per master cycle (65.536 sec).
[2] Component temperature telemetry shall be available for sampling once per master cycle unless the expected rate of change is faster than once per master cycle. (No temperature telemetry in the Health and Safety (1 Kbps) stream will be sampled more than once per master cycle.)
[3] Component telemetry used to verify proper response to a command shall be available for sampling at least once every 8 major cycles (1 major cycle = 1.024 sec) in the Housekeeping (16 Kbps) stream.
[4] Component telemetry used to verify proper response to commands associated with spacecraft and HGA pointing shall be available for sampling at least once every 8 major cycles in the Health and Safety stream.

3.3.2 Standard Interface Circuits

3.3.2.1 Applicability

Standard circuits contained within this section shall be used for all electrical signal interfaces.

3.3.2.2 Digital Circuit Usage

[1]Digital interface circuits shall be used for point–to–point logic level discretes, serial data interfaces, and clocks.
[2] Where more than one standard interface circuit is otherwise acceptable, the one with lowest average power consumption shall be used.

3.3.2.3 Component Internal Redundancy

Components with functionally redundant parts, such as line drivers or receivers, shall physically separate these parts such that a failure of the primary function shall not affect the redundant function.

3.3.2.4 Hysteresis

For digital clock interfaces, or other interfaces which may operate incorrectly due to noise generated during signal transitions, the receiver circuit shall be designed with hysteresis to prevent multiple false outputs arising from any given input signal transition.

3.3.2.5 Short–Circuit Protection

All interface driver circuits shall tolerate a short–circuit to ground for an indefinite duration, without sustaining damage or degradation in performance.

3.3.2.6 Input Protection

[1] All interface receiver circuits shall be designed to prevent indeterminate behavior in the event of an input open circuit.
[2] Any input bias shall be in the direction most likely to be "fail–safe" from a systems standpoint.

3.3.2.7 Signal Polarity

[1] Unless otherwise specified, a single–ended digital voltage–level interface signal, at or close to zero V shall be designated "low," "false,","off," or "data zero," while a signal at a significant positive voltage (typically +5 V) shall be designated "high,","true," "on," or "data one."
[2] These definitions shall apply to relay or solenoid drive interfaces where the driven coil is returned to ground level.
[3] Such relays shall be pulsed to an "on" state in accordance with para 3.3.2.9.1[4] and then returned to an "off" ground state.
[4] Relays which interface with the C&DH subsystem shall employ the above convention.

3.3.2.8 Standard Digital Interfaces

3.3.2.8.1 RS–422

[1] Digital interfaces using frequencies between 0 and 4 MHz shall be compliant with EIA RS–422
[2] and shall use the interface circuit shown in Figure 3.
[3] The interface shall use series terminating resistors of 200 ohms at the driving end in circuits which cross–strap drivers to receivers.

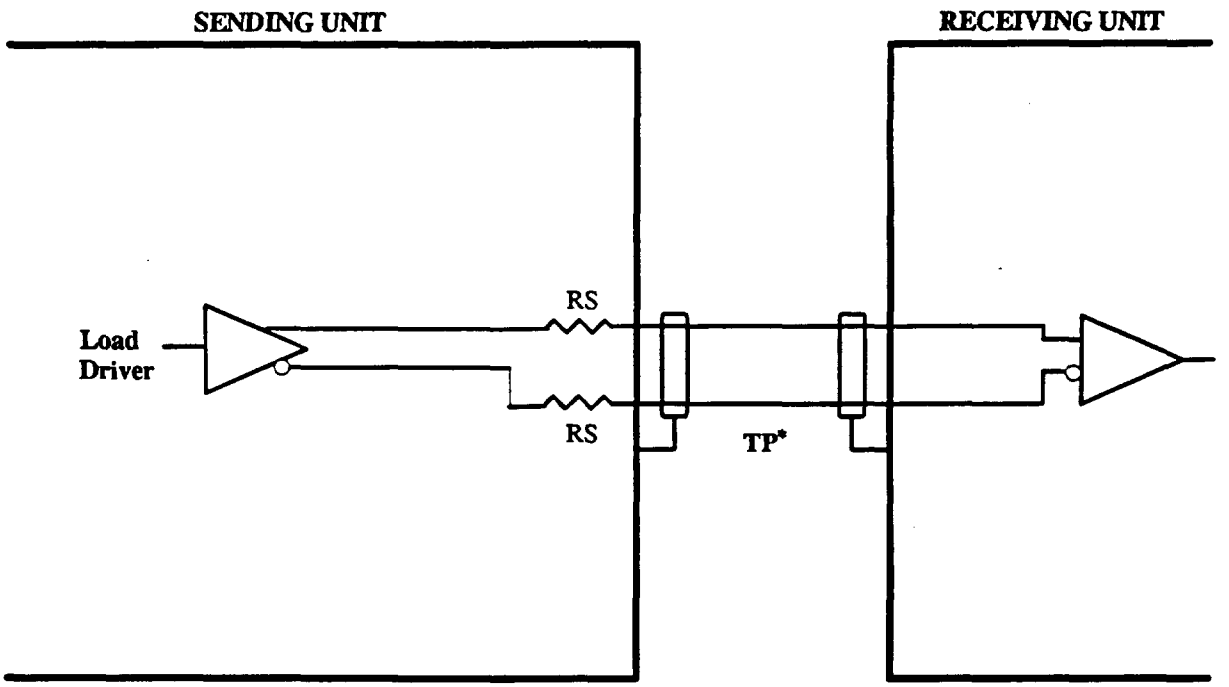

*Shield can be used for more than one twisted pair. RS =200 ohms

NOTES: Cable characteristic impedance (Z0) = 100 ohms
Twisted pair = TP
Proposed RS–422 Driver = 26CT31 or 26C31 (Harris) or equivalent
Proposed RS–422 Receiver =26CT31 or 26C32 (Harris) or equivalent
RS–422 Driver output impedance (R0) = 15 ohmstypical

RS–422 Interfaces will be sent in a wrapped bundle
with a single shield.

Chassis Ground

Figure 3. RS–422 Standard Interface Circuit

3.3.2.8.2 Emitter Coupled Logic (ECL) Interfaces

[1] Where interface frequencies exceed the capability of RS–422 interface circuits, ECL interfaces shall be used in accordance with the F100K ECL logic Databook and Design Guide, National Semiconductor 400028.
[2] ECL interfaces shall use a 100Ω twinaxial cable for component Interfaces.
[3] The signal characteristics shall be as shown in Table I.
[4] ECL interfaces shall use the ECL circuit shown in Figure 4.
[5] The receiver circuit shall present a 100Ω ±2% load at its interface.

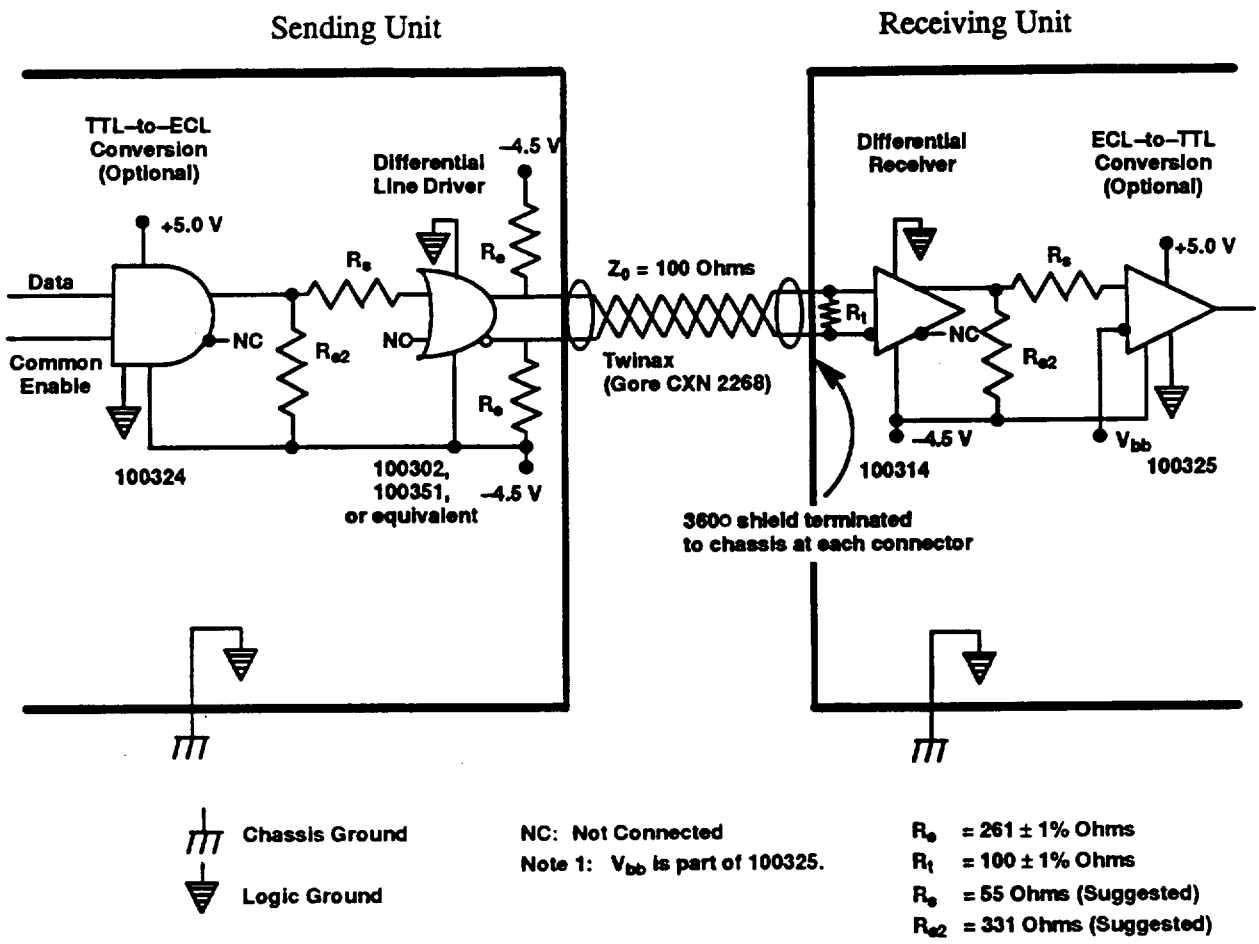

Figure 4. ECL Interface Circuit

Table I. ECL Interface Characteristics

Characteristic	Property/Value
Waveform	Clock: Square Wave All other signals : NRZ–L
Receiver Common Mode Voltage (V_{CM})	–2.5 Volts <= V_{CM} <= –0.5 Volts
Rise Time	3.5 Nanoseconds maximum (20 to 80%)
Fall Time	3.5 Nanoseconds maximum (80 to 20%)
Load	ECL Line Receiver plus 10 feet max of cable.
Minimum Receiver Voltage	0.3 V_D
Minimum Driver Voltage	0.6 V_D

3.3.2.9 Relay Drivers

Relay driver interface circuits shall be as shown in Figure 5.

3.3.2.9.1 Relay Driver Interface Characteristics

[1] When active, the driver circuit output voltage shall be +27 ±2 Vdc while driving a load at any current between 2 and 360 milliamps.
[2] The relay driver shall be an open circuit with a maximum leakage current of 100 microamps when relay driver is in an off state.
[3] The active level shall be maintained for 45 ±3 ms, exclusive of rise and fall times, when measured at amplitudes ≥25V.
[4] The rise time between +1 and +25 Vdc shall be 1.0 ± .5 milliseconds.
[5] The fall time between +25 and +1 Vdc shall be no less than 0.5 milliseconds.
[6] The relay driver shall include overcurrent protection to terminate the command if the load current exceeds 425 ± 15 milliamps.
[7] Relay Drivers used to send commands shall be capable of sending up to 10 commands per second.

3.3.2.9.2 Transient Suppression

Relay coils shall be shunted (e.g. by series redundant suppression diodes) so that the inductively–induced voltage on the interface line at the on–to–off transition does not exceed the coil return voltage by more than 2.0 V.

3.3.2.10 Analog Telemetry Interfaces

[1] Analog telemetry interfaces will sense voltage levels between 0 and 5 V dc with 8 bits of resolution.
[2] The accuracy of the sample will be ±1.0% of full scale (+5V) ±0.5 LSB.

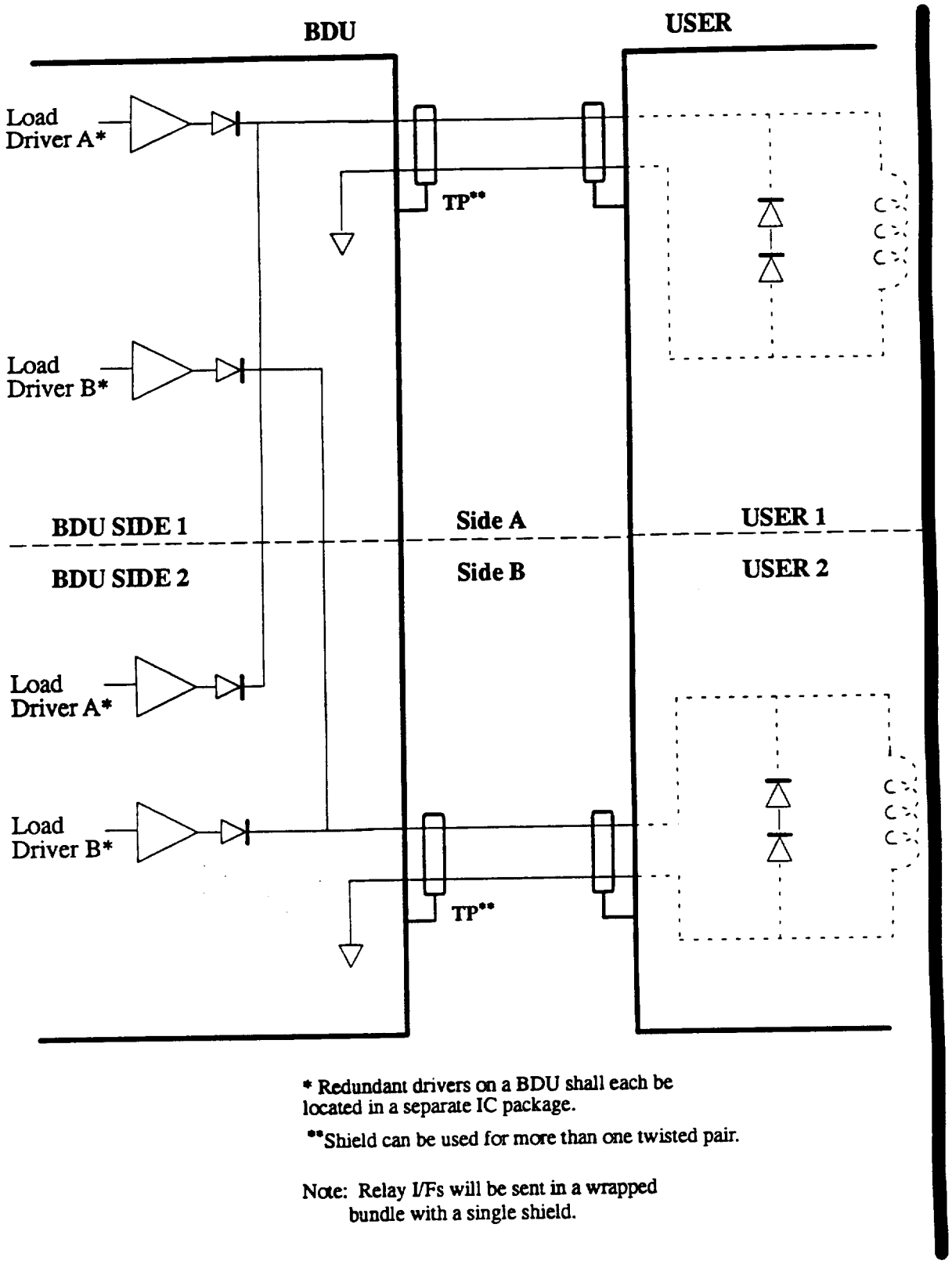

* Redundant drivers on a BDU shall each be located in a separate IC package.

**Shield can be used for more than one twisted pair.

Note: Relay I/Fs will be sent in a wrapped bundle with a single shield.

Figure 5. Relay Driver Standard Interface Circuit

3.3.2.10.1 Passive Analog Interfaces

[1] Passive analog telemetry interfaces shall be driven with a sense current of 1.0 mA ±0.5%,
[2] and shall sense voltage levels between 0 and 5 Vdc.
[3]Passive analog interface circuits shall be as shown in Figure 6.
[4] The components and the harness shall each maintain primary and return isolation.

3.3.2.10.2 Active Analog Interfaces

[1] Components using active analog telemetry interfaces shall provide a signal plus a dedicated reference at the interface.
[2] Input impedance shall be greater than 1 megohm dc resistance when the signal is sampled and when the signal is not sampled.
[3] The component voltages shall not range beyond ±16 Vdc. (Any voltage in excess of 5 Vdc at the BDU interface will be reported as 5 Vdc in the telemetry stream.)
[4] Operational component differential voltages on the output lines shall be in the range of 0 to +5 Vdc.
[5] The signal reference voltage range shall be –1 to +1 Vdc with respect to the SRP at the BDU interface.
[6]Active analog interface circuits shall be as shown in Figure 7.

3.3.2.11 Active and Passive Bi–level Interfaces

The requirements below apply to bi–level interfaces at which the component both accepts commands from and delivers telemetry to the Spacecraft Bus C&DH subsystem.

3.3.2.11.1 Passive Bi–level Interfaces

[1] The circuit "on" voltage shall be between+3 and 10 Vdc.
[2] The circuit "off" voltage shall be between 0 and 0.5 Vdc.
[3] The component portion of the interface shall accept a total input current up to 1.0 mA.
[4] The load capacitance at the BDU interface shall be less than 1.8 nanofarads.
[5] The component shall tolerate overvoltages in the range of –1 to 14 Vdc.
[6] Passive bi–level interface circuits shall be as shown in Figure 8.
[7] The components and the harness shall each internally maintain primary and return isolation.

3.3.2.11.2 Active Bi–level Interfaces

[1] Components using active analog telemetry interfaces shall provide a signal plus a dedicated reference at the interface.
[2] The circuit "on" differential voltage shall be between+3 and 10 Vdc.
[3] The circuit "off" differential voltage shall be between 0 and 0.5 Vdc.
[4] Input impedance shall be at least 1 megohm dc resistance when the signal is and is not sampled.
[5] Component voltages on the output lines shall be in the range of ±16 Vdc.
[6] The signal reference voltage range shall be 1 to +1 Vdc with respect to the SRP at the BDU interface.
[7] Active bi–level interface circuits shall be as shown in Figure 9.

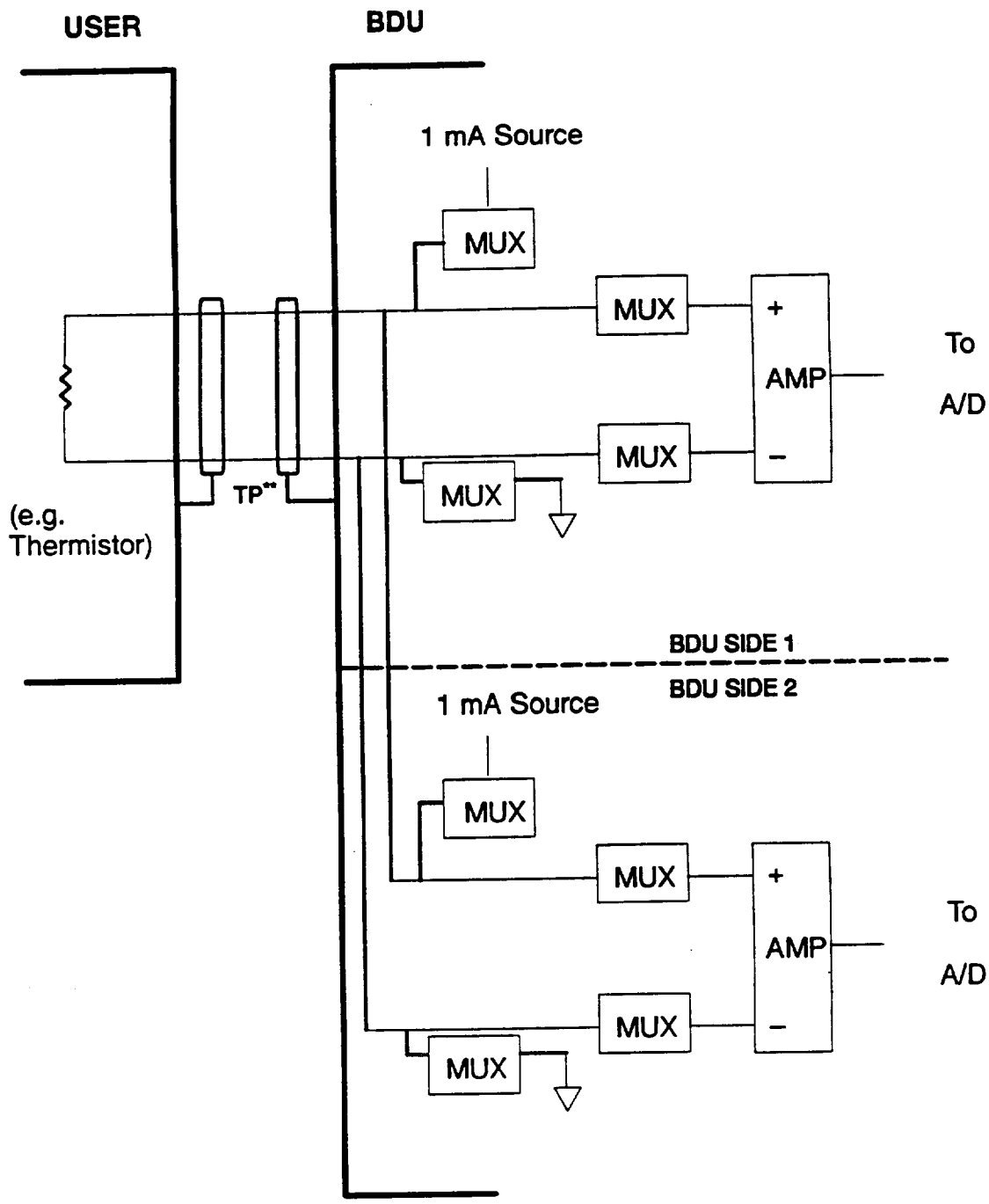

Note: Passive Analog I/Fs will be sent in a wrapped bundle with a single shield.

**Shield can be used for more than one twisted pair.

Figure 6. Standard Passive Analog Interface Circuit

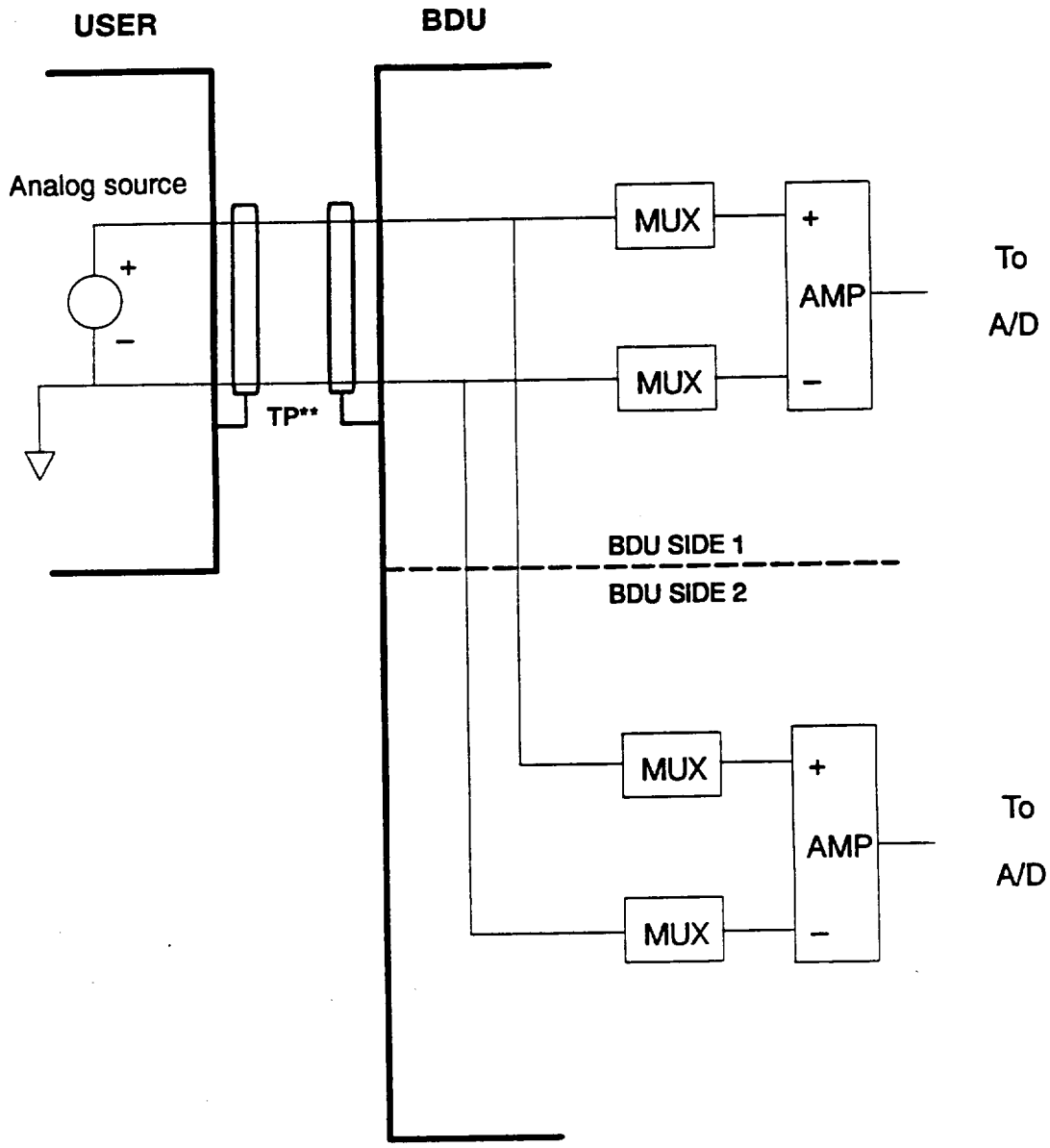

Note: Active Analog I/Fs will be sent in a wrapped bundle with a single shield.

**Shield can be used for more than one twisted pair.

Figure 7. Standard Active Analog Interface Circuit

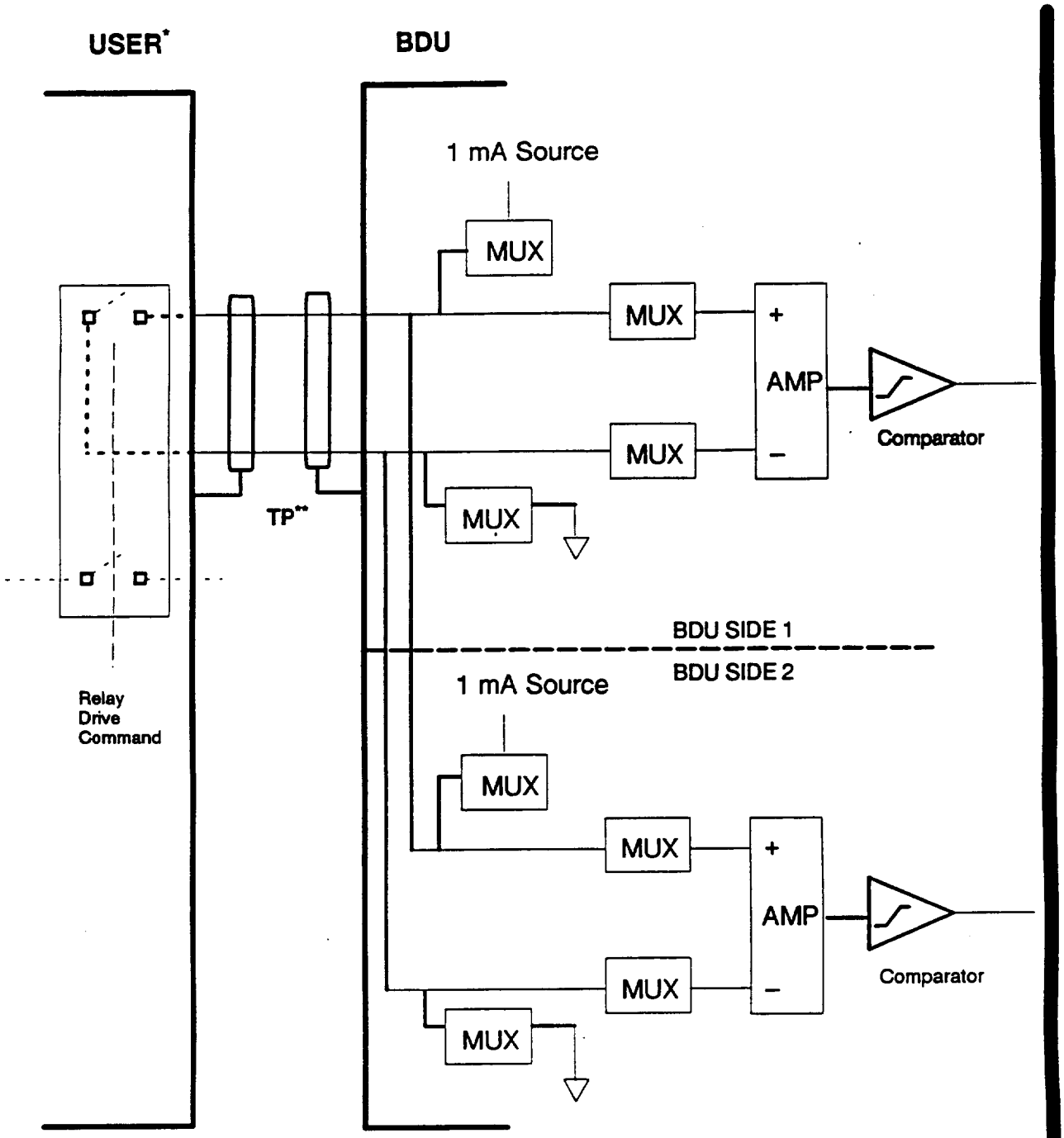

* Example design

Note: Passive Bi–Level I/Fs will be sent in a wrapped bundle with a single shield.

**Shield can be used for more than one twisted pair.

Figure 8. Standard Passive Bi–Level Telemetry Interface Circuit

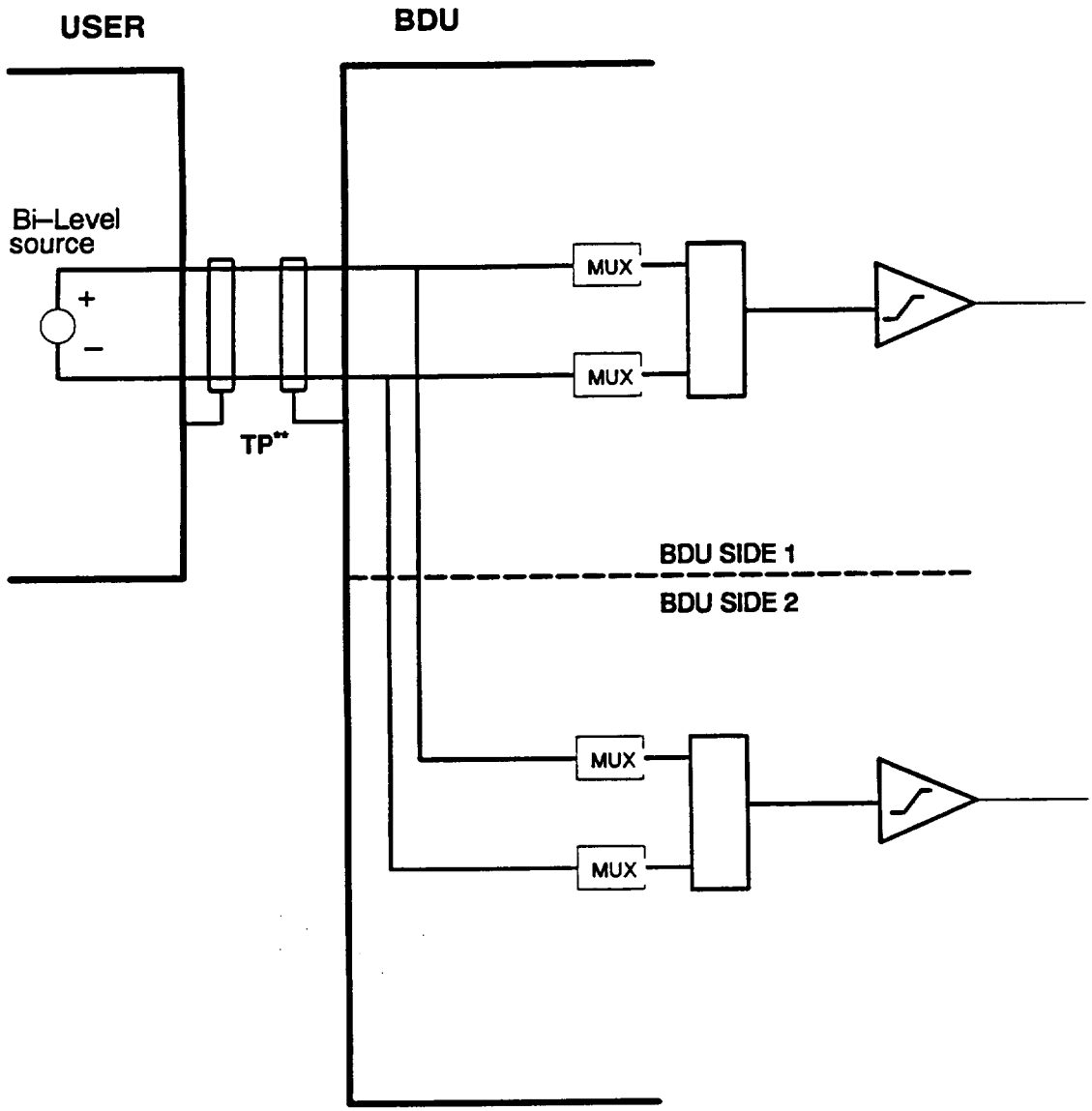

Note: Active Bi–Level I/Fs will be sent in a wrapped bundle with a single shield.

**Shield can be used for more than one twisted pair.

Figure 9. Standard Active Bi–Level Telemetry Interface Circuit

3.3.3 Point–to–Point Command and Telemetry Serial I/O Interfaces

The interfaces specified in this section are used for data transfers between two distinct components (i.e., use no data bus). They provide for sequential transmission of messages containing multiple digital data bits.

[1] All I/O interfaces shall use RS–422 interface circuits, as specified in Section 3.3.2.8.1, except as otherwise specified herein.
[2] Each interface shall be capable of handling data transfers to and from the component but not both simultaneously.
[3] The selection of transfer direction, and the initiation of all transfers shall be under BDU control. If bidirectional transmission is not required by a specific interfaced device (user), the interface may be used unidirectionally.

3.3.3.1 Interface Lines

Interface lines will be used for the following 6 signal–interface lines: CMD_Enable–N, TLM_Enable–N, TLM_Sync–N, Clock, and CMD_Data lines (driven by the BDU), and the TLM_Data line (driven by the user), as shown in Figure 10.

[1] The differential logic defined in Figure 11 shall be used.
[2] The user's receiver circuits shall be configured as in Figure 12 for CMD_Enable–N, TLM_Enable–N, TLM_Sync–N, Clock and CMD_Data lines.

The TLM_Data receivers in the BDU will cross–strap line drivers from the user as in Figure 13.

3.3.3.2 Input (Command) Protocol and Timing

[1] Upon receipt of the CMD_Enable–N from the BDU the user shall accept a 16–bit command data word transfer.
[2] The component shall sample serial command data which is provided by the BDU to the user interface on the rising edge of the 250 kHz Clock signal.
[3] The timing of the serial command interface signals shall comply with that shown in Figure 14 as measured from the user's side of the interface.

3.3.3.3 Output (Telemetry) Protocol and Timing

[1] Upon receipt of the TLM_Enable–N from the BDU the user shall transmit an 8–bit telemetry data transfer.
[2] Serial telemetry data shall be shifted out by the user on the falling edge of the 250 kHz Clock signal from the BDU,
[3] and be shifted into the BDU on the rising edge of the Clock.
(The TLM_Sync–N signal (user optional) is available to reset user's subcommutated telemetry streams, such that the next 8–bit telemetry word received from the user would be word 1 of the user's subcommutated telemetry stream.)
[4] The TLM_Sync–N pulse shall normally be a logic 1, but shall pulse to a logic 0 for 8.0 μsec

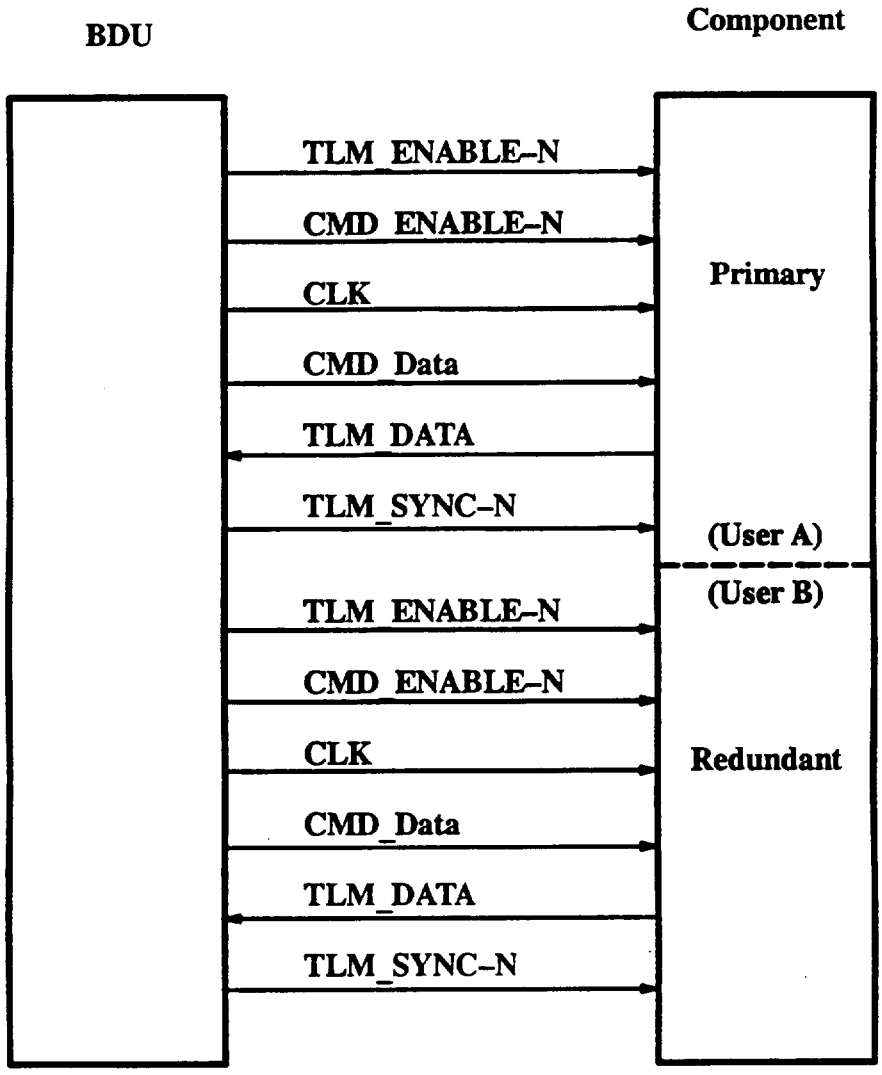

Figure 10. Synchronous I/O Interface

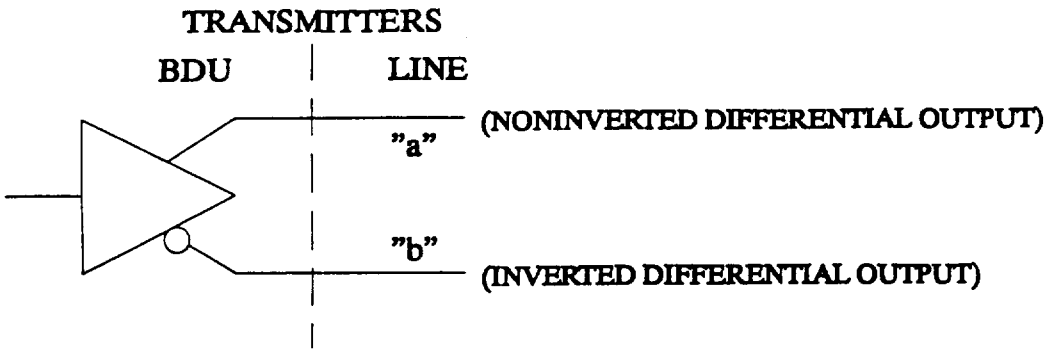

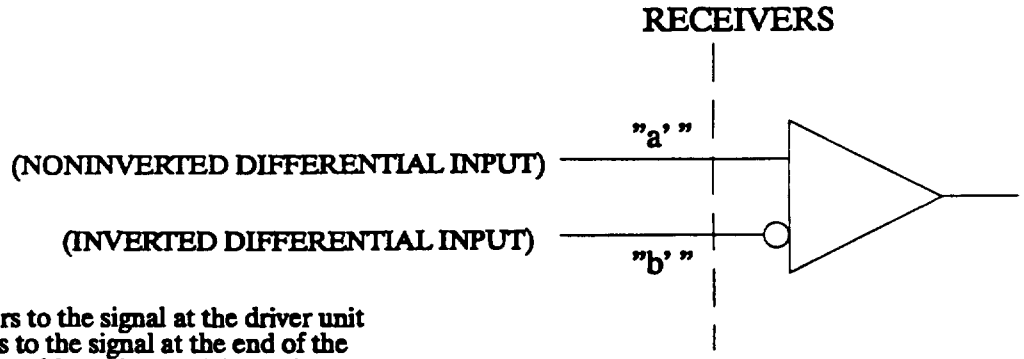

NOTE: "a" refers to the signal at the driver unit
"a' " refers to the signal at the end of the connecting cable at the receiving unit

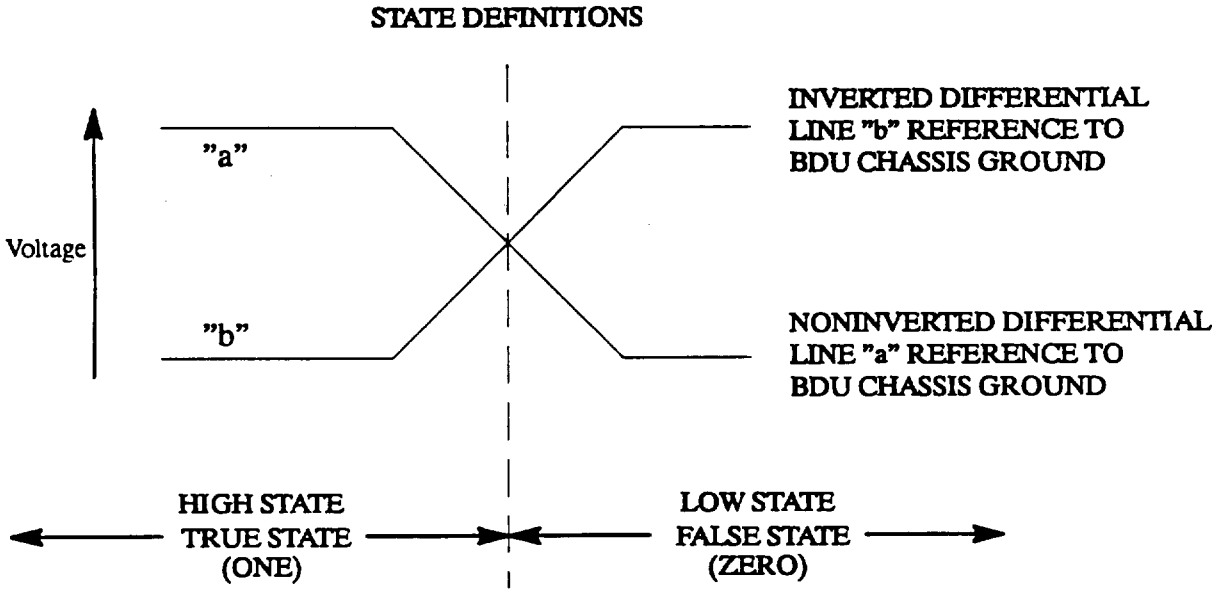

Figure 11. Differential Signal Conventions

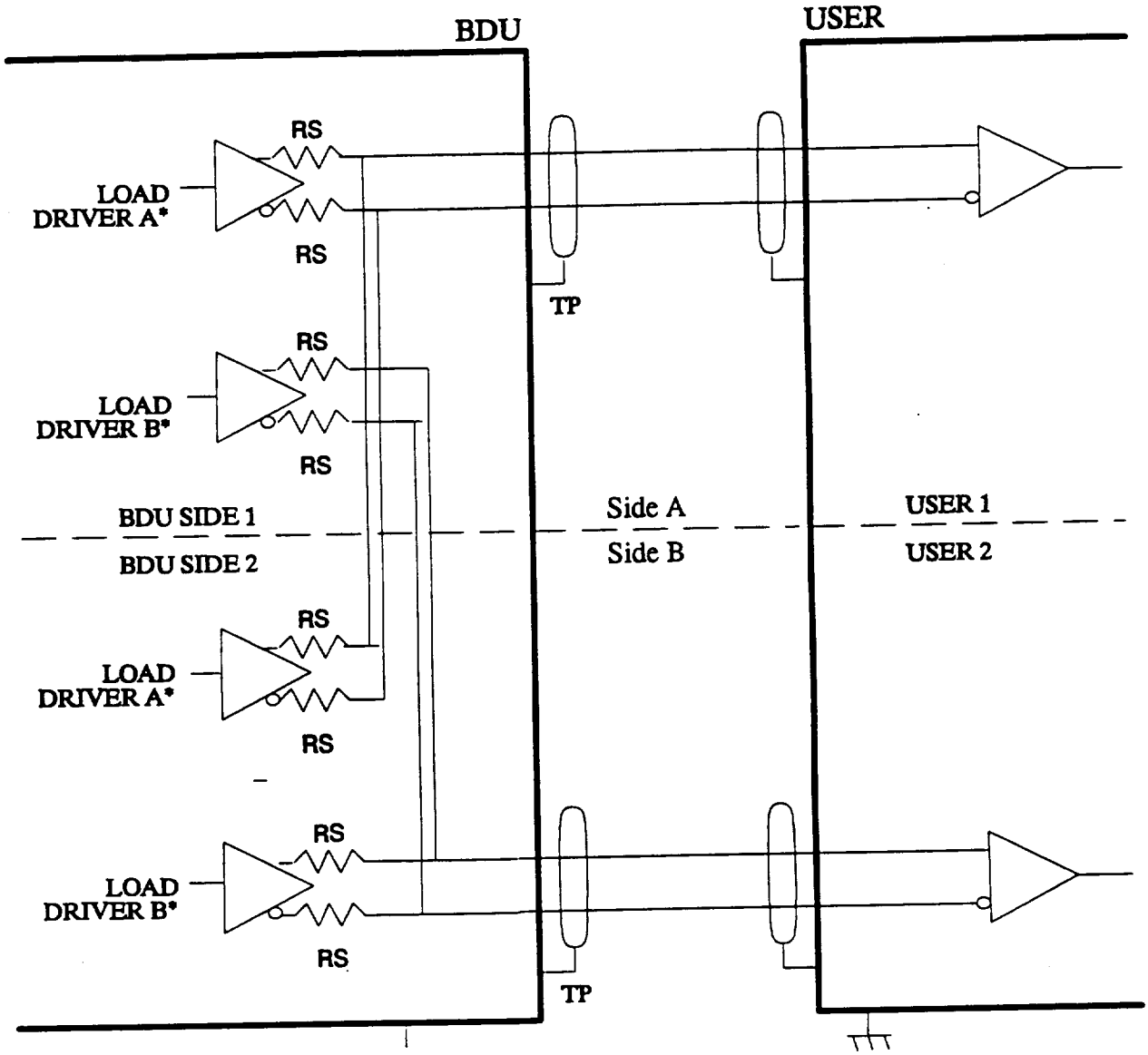

NOTES: Cable characteristic impedance (Z0) = 100 ohms
Twisted shielded pair = TP
Proposed RS–422 Driver = HS–26C31MS or HS–26CT31MS or equivalent
Proposed RS–422 Receiver = HS–26C32MS or HS–26CT32MS or equivalen
RS–422 Driver output impedance (R0) = 10 ohms maximum
RS–422 Receiver input impedance (RIN) = 4K ohms minimum
RS = 200 ohms
RS–422 Interfaces will be sent in a wrapped bundle
with a single shield.
* Redundant drivers on each BDU side shall be located in separate
IC packages.

Chassis Ground

Figure 12. BDU to User (RS–422)

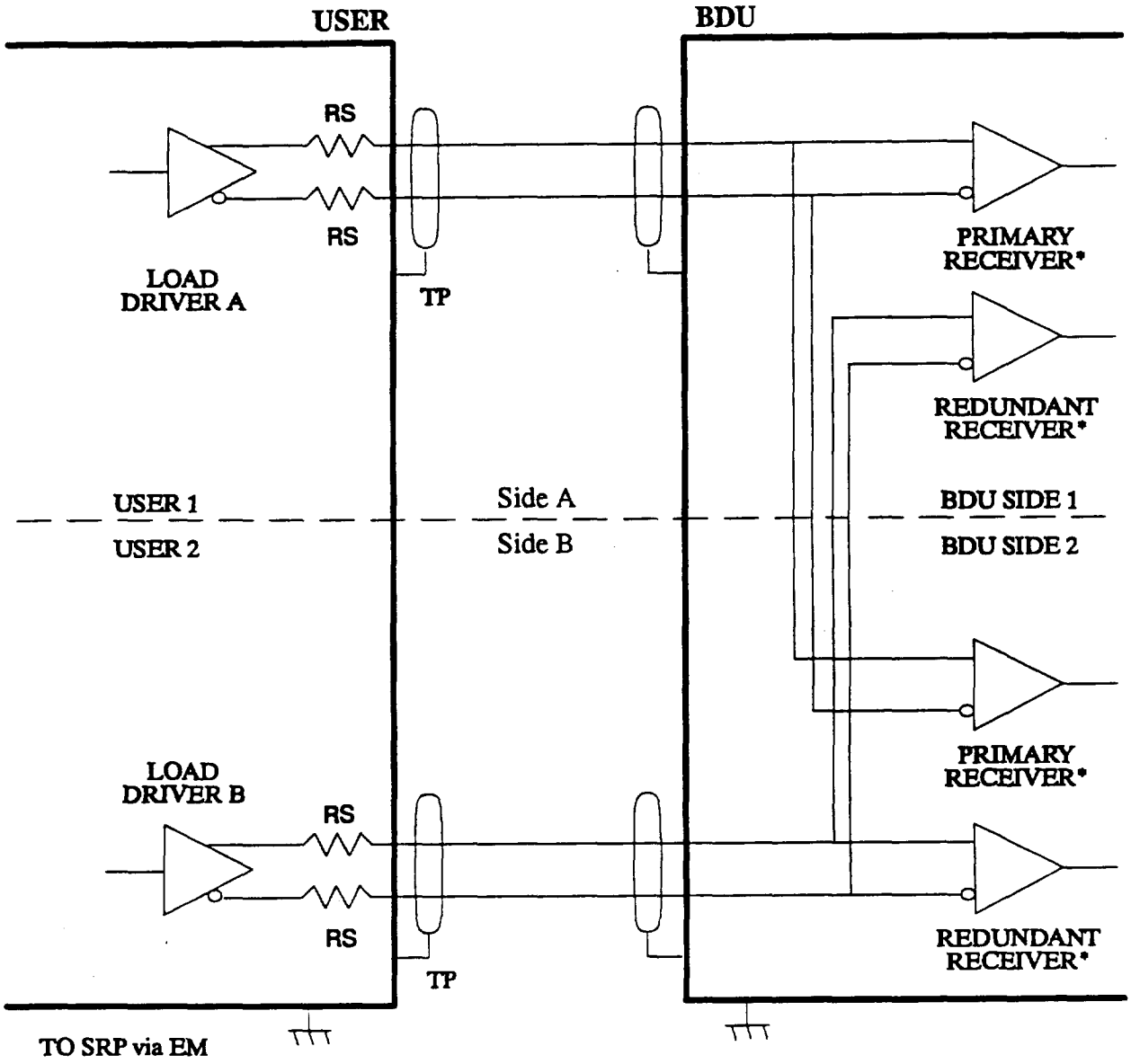

NOTES: Cable characteristic impedance (Z0) = 100 ohms
Twisted shielded pair = TP
Proposed RS–422 Driver = HS–26C31MS or HS–26CT31MS or equivalent
Proposed RS–422 Receiver = HS–26C32MS or HS–26CT32MS or equivalent
RS–422 Driver output impedance (R0) = 10 ohms maximum
RS–422 Receiver input impedance (RIN) = 4K ohms minimum
RS=200 ohms
RS–422 Interfaces will be sent in a wrapped bundle
with a single shield.

* Redundant drivers on each BDU side shall be located in separate IC packages.

Chassis Ground

Figure 13. User to BDU (RS–422)

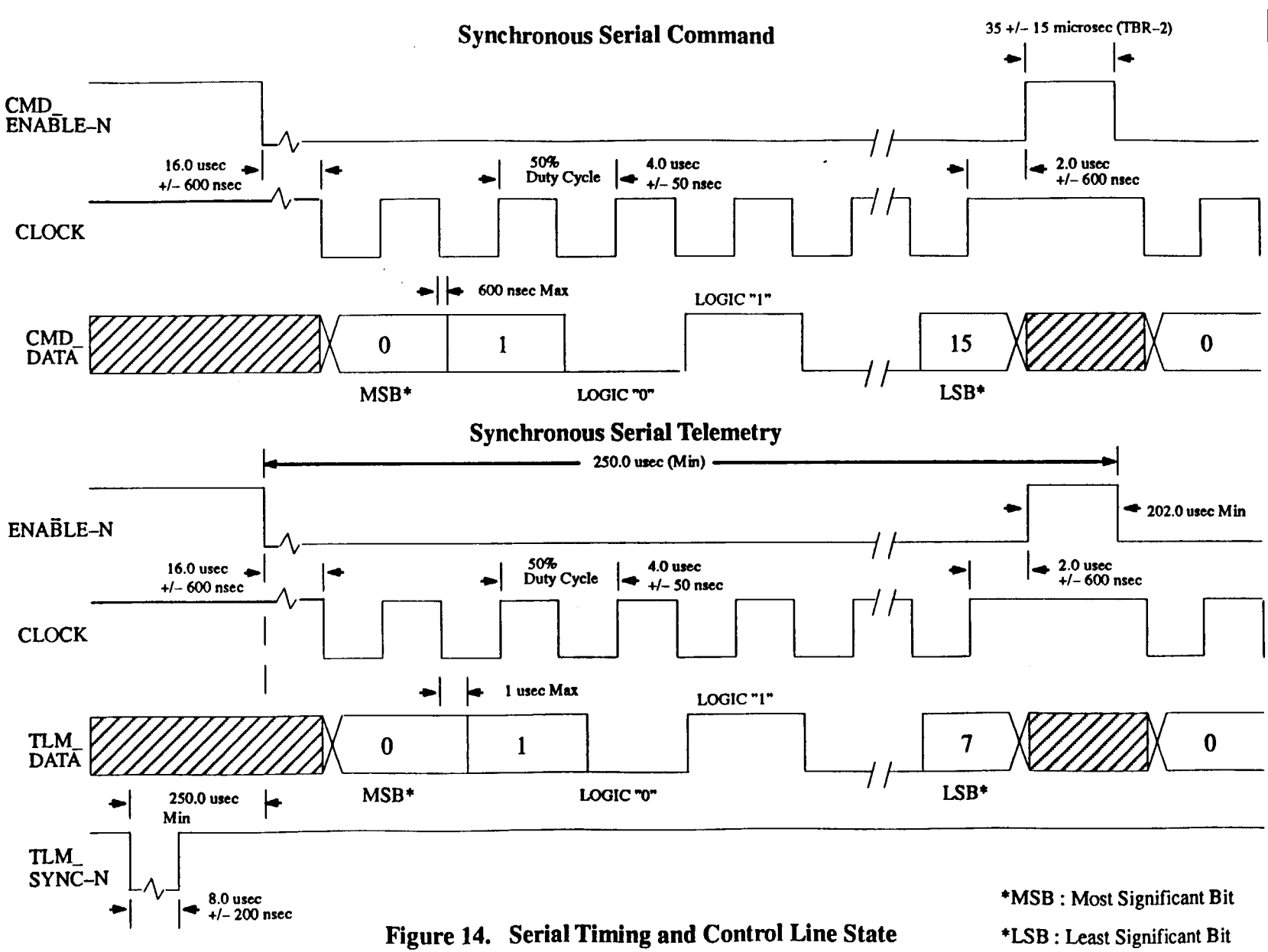

Figure 14. Serial Timing and Control Line State

Figure 14.

±200 nanosecond when active.
[5] The timing of the serial telemetry interface signals shall comply with that shown in Figure 14 as measured from the user's side of the interface.
[6] The rising edge of any TLM_Sync–N signal sent to the user shall occur a minimum of 10 usec prior to the falling edge of TLM_Enable–N.

3.3.3.4 Initialization

All components interfaced to a serial BDU I/O interface shall autonomously reset all serial interface signals generated by that component to a high state, on detection of component power turn–on.

3.3.4 Point–to–Point Command Interfaces

3.3.4.1 Toggle Commands Ban

[1] Spacecraft Bus commands shall each have only one implementation.
[2] The function initiated by any command shall not vary as a function of the existing state of the Spacecraft equipment executing the command (i.e., no "toggle" commands).
[3] The function initiated shall not vary as a function of the existing operating mode.

3.3.4.2 Point–to–Point Logic Level Command Lines

[1] These shall be individual RS–422 signal lines which shall be in a high state under unchanging voltage conditions, and following component power turn–on.
[2] When appropriately commanded, the BDU shall drive the line to its low state;
[3] shall allow it to remain there for a duration of 100 µsec± 10 µsec
[4] then shall drive the line back to its high state.

3.4 Electroexplosive (EED) Devices

3.4.1 Maximum Simultaneous Firings

The component shall require no more than four simultaneous EED firings.

3.4.2 EED Initiators

All applications using EEDs shall use EED devices listed in the Program Approved Parts List, 20008648.

3.5 Test Points

3.5.1 Test Point Interfaces

A component may elect to use test points during component level testing to provide external access to internal component circuitry via GSE. Such access may be used to support component troubleshooting or other such activities requiring monitoring that is not necessarily available through flight interfaces.

Potential unique uses of test points could include:

a. Monitoring of dedicated test sensors (e.g., accelerometers, temperature sensors) to monitor local test environments to confirm system models,

b. Fuse integrity checking to verify fuse states of embedded fuses, microprocessor debugging,

c. Access to interior points to achieve analog monitoring during troubleshooting of intermittent faults, or

d. Injection of signals to simulate sensor inputs in the event a sensor cannot otherwise be tested through its operational range. (e.g., for IRU testing).

Use of component test points shall meet the following general requirements.

3.5.1.1 Integration and Test Use

Test points shall not be used during Spacecraft integration and test assuming Spacecraft integration commences following delivery of the component to the Spacecraft integration and test sight and successful completion of the component level tests.

3.5.1.2 Performance Verification Limitation

To the extent possible, component data collected to verify acceptance or qualification of component performance requirements shall be acquired through flight interfaces and not through test point interfaces.

3.5.1.3 Keyed Connectors

[1] All test points shall be brought out to a separate, keyed connector(s) (keyed by color)
[2] which shall be accessible without requiring the removal of any Spacecraft equipment when the component is installed in its parent assembly.
[3] Separate test connectors shall be used to segregate classes of signals defined in paragraph 3.6.7.
[4] When not in use and prior to launch, the test point connectors shall be protected with flight qualified covers.

3.5.1.4 Power and Load Isolation

[1] The component shall not be powered through test point interface circuitry, including connection to external GSE.
[2] The use of the test point shall not affect the ability of the component to meet its performance requirements.

3.5.1.5 Measurement Accuracy

The measurement accuracy required by test point interface circuitry shall be attainable using available test equipment.

3.5.1.6 Failure Propagation

Test point interface circuitry shall not propagate failures to component flight circuitry. This includes credible failures in GSE connected externally to the test point interface connectors.

3.5.1.7 Short–Circuit Isolation

The component shall operate within specification in the event any test point is shorted to the power bus, ground, or another test point.

3.5.1.8 Grounding Integrity

Test point interface circuitry shall not compromise component grounding requirements.

3.5.1.9 EMI/EMC

[1] The test point interface shall meet the Signal Interface Grounding, Reference, and Isolation requirements specified in the Spacecraft System EMC Requirements section of the EMC Control Plan, PN20005869.
[2] Test connectors shall meet the Connector and Shield Bonding requirements specified in the Spacecraft System EMC Requirements section of the EMC Control Plan, PN20005869.

3.5.2 Test Point Interface Documentation

Test point interfaces, functions and GSE interconnection shall be documented in the component specification, test plan, and test procedures.

3.6 Connectors and Contact Allocations

3.6.1 Connector Mounting Surface

Components within Equipment Modules shall mount their connectors to the surface of the component opposite the mounting surface.

3.6.2 Allowable Connector Types

Connectors used on components shall be selected from the Program Approved Parts List (PAPL). A subset of the Connectors which are preferred for use on the EOS Spacecraft is provided in Table II.

3.6.3 Connector Shell Grounding

All component–mounted connector shells shall be bonded to chassis ground in accordance with 3.2.3.6 herein.

Table II. Preferred Connector Types

Signal Type	Connector Description	Procurement Document	Comments
Power	Circular, Receptacle, Box Mounting Flange, Crimp Type, Bayonet Coupling	Astro Space 20034844 (Similar to MS27508EXXFXXP)	MIL–C–38999 Series II – select shell size appropriate for interface, use size 20 or 22 contacts
	Circular, Plug, Crimp Type, Bayonet Coupling	Astro Space 20038047 (Similar to MS27484TXXFXXS)	
Command & Telemetry	Circular, Receptacle, Box Mounting Flange, Crimp Type, Bayonet Coupling	Astro Space 20034844 (Similar to MS27508EXXFXXS)	MIL–C–38999 Series II – select shell size appropriate for interface, use size 22 contacts
	Circular, Plug, Crimp Type, Bayonet Coupling	Astro Space 20038047 (Similar to MS27484TXXFXXP)	
	Rectangular, Receptacle, Crimp Type, Standard Density	(TBD–1) (Similar to GSFC S311P409–XS–B–12)	
	Rectangular, Plug, Crimp Type, Standard Density	(TBD–1) (Similar to GSFC S311P409–XP–B–12)	
High–Rate Science Data and RF	Receptacle, SMA	Gore R52 or R42	Semi–rigid, flex, or other coaxial cable
	Plug, SMA, Straight	Gore S01	Mates with Gore G2 or G3 Coaxial Cable

3.6.4 Spacing Between Connectors

[1] For circular connectors, at least 3/4 inch between the harness plug shells shall be provided for fingers or mating tools.
[2] Rectangular connectors shall have at least 3/4 inch clearance at the end of the body of the connector as shown below.

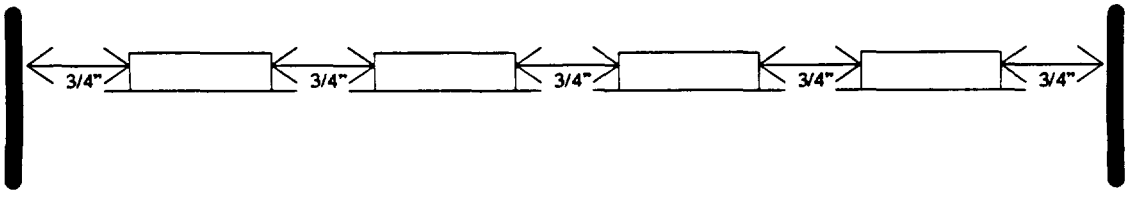

3.6.5 Connector Keying and Identification

[1] Connector location and orientation shall be defined on the component Interface Control Drawing.
[2] Where more than one connector is used on any face of a component, they shall be of different size or be uniquely keyed physically to prevent improper connections. Unique keying includes different shell key polarizing, different mating contacts, different shell connectors or different color coding.
[3] All connectors shall be marked with the connector designation.

3.6.6 Contact/Socket Usage

[1] Pin contacts shall be used for component input power connections. It is preferred that pin contacts also be used for component input signal connections.
[2] Socket contacts shall be used for output power connections. It is preferred that socket contacts also be used for component output signal connections.

3.6.7 Signal Category Segregation

[1] Components shall supply a separate connector for each of the following signal types which it uses:

a. Primary Power (120Vdc)

b. Secondary Power (28Vdc)

c. 1553 Bus

d. Time Mark and Frequency Bus

e. Command and Telemetry

[2] Relay drive commands shall not be on the same connector as telemetry and logic–level commands unless a cross–talk analysis is performed to demonstrate operational immunity from relay drive generated signals.

3.6.8 Redundant Signal Segregation

Functionally redundant signals (e.g., primary command, telemetry, or power vs. redundant command, telemetry, or power) shall be placed on separate connectors. Redundant contacts used to carry the same signal need not be placed on separate connectors.

3.6.9 Contact Allocation

[1] To facilitate the computer preparation of the Spacecraft harness wire connection list, each component's interface control documents (ICDs) shall include a complete list of all inputs and outputs which includes the associated wire gauge and contact size. [2] Each contact shall also be identified by the signal category defined in the Wiring Design section of the Spacecraft System EMC Requirements part of the EMC Control Plan, PN20005869.

3.6.9.1 Power and Grounds

[1] Primary power and its return shall be assigned to adjacent contacts to facilitate twisted pair harnessing employed to reduce EMI.
[2] secondary power and its return shall also be assigned to adjacent contacts.
[3] At least two separate feed wires and contacts and the same number of return wires and contacts shall be provided for power feeds.
[4] The number of power contacts provided by a component shall be chosen such that, with any one contact failed open, the maximum current through any remaining contact does not exceed the derated current capacity of the contact.

3.6.9.2 Relay Drive Command Contacts

The command return contact shall be assigned to a contact adjacent to the relay drive signal contact except where multiple relays are bussed on the same return. In this case the relay drive signal contacts shall be assigned adjacent locations as near as possible to the bussed return contact.

3.6.9.3 Chassis Ground Contact

Pin 1 of the power input connector to the component shall be assigned to chassis ground.

3.6.9.4 Shield Ground Contact

When a shield is required to be routed through a connector, the contact assigned to the shield shall be adjacent to the signal contact.

3.6.9.5 Signal Return Contact

The component shall supply at least one signal return contact for each signal type used from the following list:

a. Relay

b. Bi–level and Analog

c. Logic–level and Serial Commands

3.6.9.6 Spare Contacts

Where practical, a minimum of 10% spare contacts shall be provided in the design allocation of signals to connector contacts per connector.

3.6.10 Connector Caps

Caps shall be provided to protect the connector from damage while not mated.

3.7 Workmanship

The design requirements found throughout the documents NHB 5300.4 (3A, G–K) shall be implemented.

(This page intentionally left blank.)

4 MECHANICAL INTERFACES

Component specification authors shall note exceptions to this specification in Section 6 of their respective component specifications.

4.1 Coordinate Systems

A right–hand, orthogonal, body–fixed reference coordinate system shall be used for the Spacecraft and its components as shown in Figure 15. During normal science mode operations the Z–axis shall pass through the center of the earth, with +Z being nadir (toward the earth) and normal to the instrument mounting surface. The Y–axis shall be nominally along the orbit normal, with +Y toward the cold side. The X–axis shall be normal to the Spacecraft separation plane with +X in the general direction of the Spacecraft velocity vector.

The Spacecraft origin is located at the geometric center of the Primary Structure Bulkhead #1, the bulkhead to which the PM baseplate attaches.

4.2 Component Physical Characteristics

All physical characteristics covered in this section will be established and recorded in the component Interface Control Drawing (ICD).

4.2.1 Component Size

The component shall not exceed a +0.060 inch (0.15 cm) tolerance for any dimension defined in the component Interface Control Drawing.

4.2.2 Reserved

4.2.3 Reserved

4.2.4 Reserved

4.2.5 Component Uncompensated Momentum

Uncompensated momentum for components with constant–speed rotating parts shall not exceed 0.5 N–m–sec per axis. Other torques or forces imparted on the Spacecraft by components or major assemblies shall be documented in the component or major assembly specifications.

4.3 Design and Construction

4.3.1 General

[1] Where practical and cost effective, component designers shall:

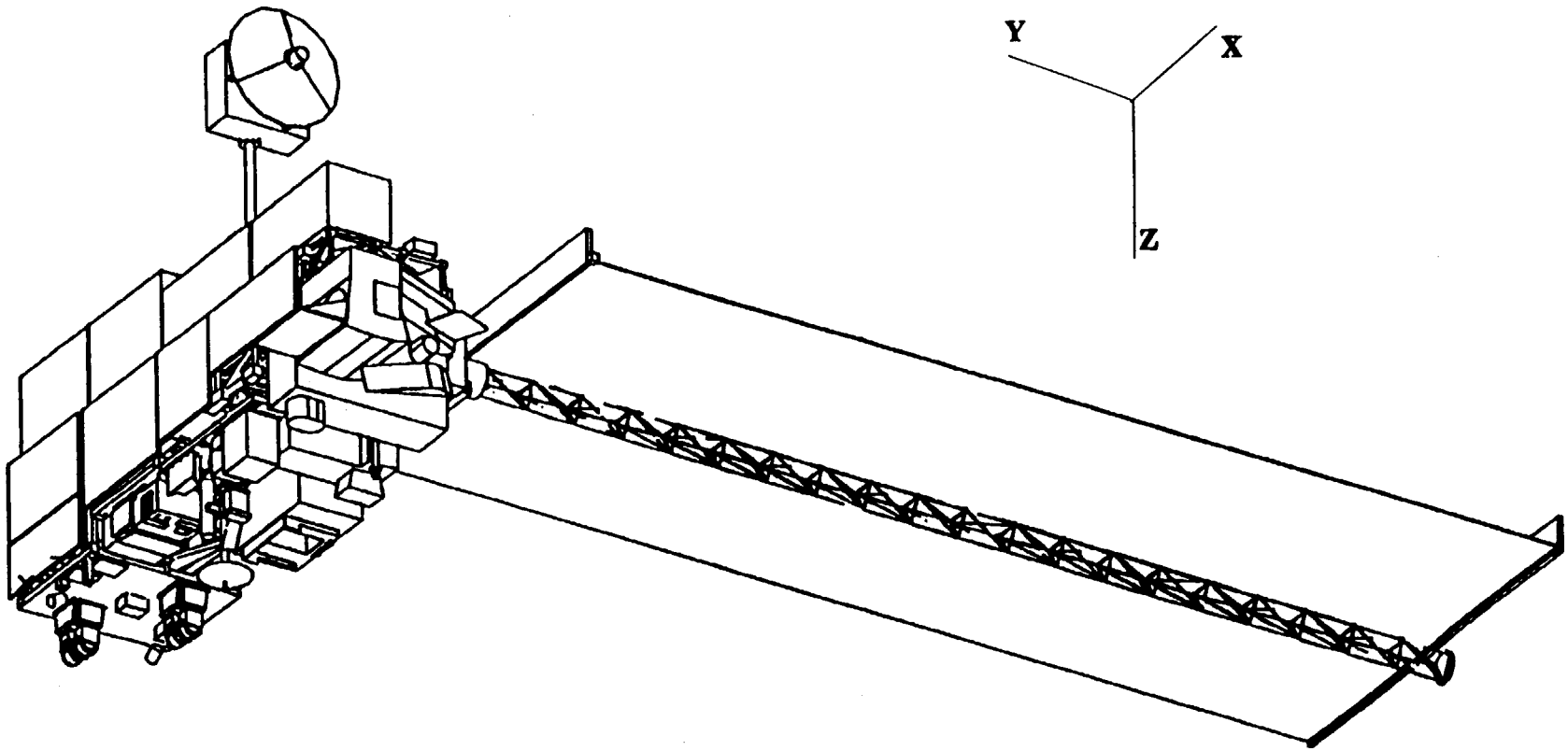

Figure 15. EOS Spacecraft Coordinate System

a. Avoid projecting parts which could be easily damaged during handling.

b. Design equipment to stand by itself in a stable manner.

c. Avoid designs in which components or parts may be inadvertently reversed or misaligned during an installation or insertion.

d. Design equipment to require only standard tools for mounting or adjustment.

e. Use standard parts and hardware to largest extent possible.

f. Minimize the need for adjustment, alignment, and calibration.

[2] Locate connectors as described in paragraph 3.6.1.
[3] Components of identical or similar form which have different functional characteristics shall be readily identifiable and distinguishable through marking or other means.

4.3.2 Identification and Marking

4.3.2.1 General

[1] All flight equipment shall be marked for identification in accordance with Martin Marietta Astro Space (Astro Space) standard for Identification Marking, S32534, class 7a. (REV E) and
[2] All equipment for shipping and handling purposes must be in compliance with MIL–STD–129, Marking for Shipment and Storage. (Note: Intra–building transport does not qualify as shipping for purposes of adherence to MIL–STD–129)
[3] and NHB 6000.1C, Requirements for Packaging, Handling and Transportation.

4.3.2.2 Physical Characteristics

[1] Markings or labels shall be affixed in a conspicuous manner to Spacecraft hardware and hardware packages such that the item is identifiable when installed in the parent assembly or stowed.
[2] Markings shall be as permanent as the normal life expectancy of the article.
[3] Markings shall be located away from points of physical wear.
[4] Markings shall not affect the leakage path between conductors or any other factors of performance.
[5] Wires and cables for hardware shall not be identified by hot stamping directly onto primary or secondary (shield) insulation.
[6] Labels shall be installed such that they are readable by the unaided human eye and by automated reader devices.

4.3.2.3 Content

[1] The identification shall contain, as a minimum, the following:

a. Manufacturer Part Number

b. Serial Number

[2] All components shall be marked in accordance with U.S. Customary System (English) units.
[3] Hardware or equipment which is not suitable for use in flight, and which could be accidentally substituted for flight or flight spares hardware, shall be plainly marked red and identified to indicate this status.
[4] Wire bundles, cables, and fluid lines shall be functionally identifiable at each end.
[5] All test points, adjustment devices, and alignment points shall be labeled.
[6] Where necessary, labels shall indicate proper orientation for the unit.

4.3.3 Finish

[1] All finishes shall be selected in accordance with 20008650, EOS Authorized Materials and Processes List.
[2] All finishes shall meet the thermal interface requirements of Section 5.2.
[3] B–rated metals as defined in Astro Space 20008650 shall be passivated, plated, painted, or otherwise finished to provide an inert exposed surface.
[4] Where dissimilar metals interact, the surfaces shall protect against galvanic action between these metals yet still meet the conductive requirements of Section 5.2.
[5] All exposed surfaces shall protect against possible wear from interaction with molecular orbital particles.

4.3.3.1 Component Mounting Surface

[1] Components which require thermal isolation at the mounting interface shall use an electrical bonding strap across the interface.
[2] The bond across the interface shall provide a resistance of < 2.5 mΩ
[3] The component mounting surfaces shall not chemically react with the Spacecraft materials they mount to if such a reaction could cause equipment on either side of the interface to not meet performance requirements.

4.3.3.2 Mounting Surface for Electrical Interface Connectors

The mounting surfaces for electrical interface connectors shall comply with the connector grounding requirements in para 3.2.3.6.

4.3.4 Component Case Design

[1] Any fillets or radii on the component exterior case shall be of adequate size to allow cleaning using solvent wipe methods.
[2] The component mounting surfaces and external component surfaces shall not oxidize.

4.3.5 Non–Flight Protective Covers

[1] Covers required during Spacecraft ground operations shall be fastened in a manner suitable to prevent loss of or damage to the Spacecraft during transportation and handling with any axis down.
[2] Hardware used to attach covers shall be captive.

[3] A tether shall be provided, if necessary, to prevent risk of losing, or dropping the cover.
[4] Non–flight protective covers shall be accessible and removable when the Spacecraft is in its stowed configuration.
[5] All covers to be removed prior to flight shall be capable of removal without disassembly of any portion of the Spacecraft or component.
[6] Such covers shall be tagged with red flags to ensure they are removed before flight and shall be labeled "non–flight".
All non–flight covers will be removed prior to installation of the payload fairing unless safety or contamination concerns dictate their retention.

4.3.6 Flight Protective Covers

[1.] Flight protective covers, whether or not in use, shall not restrict the operation of nor
[2.] limit the field–of–view of any instruments or radiators.

4.3.7 Venting

[1] Except where component design requires a sealed component, provisions shall be included for adequate venting to ensure that internal pressures do not build up to the point where any flight equipment would experience forces beyond those it is designed to withstand. (Pressure environments are provided in paragraphs 6.3.2 and 6.4.4)
[2] Venting shall not be directed toward the field–of–view of any optics,
[3] radiators, or
[4] towards any other contamination sensitive surfaces.
[5] Venting shall meet the Venting Control requirements of the Contamination Control Plan, PN20001412.
[6] Once on–orbit, any component which uses expendable gases shall not exert continuous venting forces which exceed $1x10^{-6}$ lbf at the component interface,
[7] nor shall it exert random venting impulses which exceed .0028 lbf–sec.

4.3.8 Interchangeability

Each component shall be directly replaceable in form, fit, and function by other components of the same part number except that equipment furnished in matched sets shall be interchangeable only as matched sets.

4.3.9 Drawing Terms and Tolerances

The requirements of Drawing Terms and Shop Run Tolerances, S30009, shall be implemented for all equipment built by Astro Space.

4.4 Component Mounting

4.4.1 General

[1] Components shall be designed to be installed and removed from the Spacecraft without a need to assemble or disassemble the component.
[2] Components mounted in equipment modules shall be mounted by means of Astro Space provided mounting bolts passing through flanges located on the component.
[3] All mounting bolts shall be accessible from the component side of the interface.

4.4.2 Equipment Module Mounted Components

All the equipment module structures, except for the GN&C sensor equipment module baseplate, will consist of aluminum honeycomb panels. The GN&C sensor equipment module baseplate will consist of Graphite–Epoxy facesheets with aluminum honeycomb core. Threaded inserts will be potted into the honeycomb at the appropriate component mounting locations. Components mounted within the equipment module will be shimmed by Astro Space, if necessary, to obtain proper alignment with respect to the Spacecraft optical reference.

[1] Mounting bolt size and hole pattern shall be designed to maintain the component's interface when it is subjected to all loads defined in Section 6.3 using factors of safety defined in Section 4.9.1
[2] A minimum of four identical bolts shall be used for each component except for alignment critical components which may implement a 3–point mount design.
[3] Within assemblies, bolts with different threads shall be of different sizes to prevent damage resulting from insertion into wrong holes.

4.4.3 Instrument Accommodation Equipment Mounting

Instrument accommodation equipment shall meet the constraints and guidelines specified in the GIIS, GSFC 420–03–02 for mounting to instrument secondary structure. The mounts shall also meet all performance requirements after exposure to the environments described in Section 6 herein.

4.4.4 Direct Mounting Major Assemblies

[1] Major Assemblies, other than the primary structure major assembly,shall be mounted to the primary structure node fittings.
[2] Mounting shall be kinematic where practical in order to limit load sharing between the primary structure and direct mount structure. The node fittings will have helicoil type inserts and shear boss insets as required.
[3] The insert bolt pattern shall be in accordance with the bolt pattern specified in Kinematic Mount Interface Drawing – Equipment Module, 20004013.

Direct mounted components may be shimmed, if required, to obtain the proper alignment with respect to the Spacecraft optical reference if the thermal requirements of para 5.2.2.1 are still met.

4.4.5 Mounting Surface Flatness and Finish

[1] All mounting surfaces shall be, as a minimum, flat to within 0.01 inches for each 12 inches of length.
[2] The roughness surface finish of the mounting surface shall be no greater than 63 microinch rms.

4.4.6 Mounting Hole Position and Tolerance

[1] Mounting hole positions on the component shall have a tolerance on the center–to–center distance not to exceed ±0.005 in. (0.01 cm) unless alignment requirements for that component demand otherwise.
[2] Mounting bolt hole diameters shall have tolerance not to exceed +0.005/–0.000 in. (+0.01 cm/–0.00 cm)

4.5 Hardware Layouts

4.5.1 Accessibility

The following components and component items shall be accessible during I&T or storage:

a. units which for safety reasons may require rapid prelaunch maintenance,

b. units which would require maintenance during a storage period of five years after completion of integration and test,

4.5.2 Location of Sensitive Components

The following components and component parts shall be located so as to protect them from accidental contacts with ground personnel or with other spacecraft hardware:

a. units which are fragile or otherwise susceptible to damage which are not otherwise guarded,

b. sensitive adjustment controls and actuators which are not otherwise guarded from inadvertent perturbation.

4.6 Alignment

4.6.1 General

[1] All components shall be aligned via dimensional control of mounting hole locations on the Spacecraft with respect to the Spacecraft coordinate system and
[2] via dimensional control of the component mounting hole locations with respect to the component reference axis.
[3] Where this dimensional control is not sufficient to meet the pointing requirements, control shall be achieved by shimming.
[4] If none of the above methods provide adequate pointing requirements, or if shimming is impractical, the component shall provide other means for alignment.

4.6.2 Alignment Measurement

During alignment measurement, the azimuth and elevation angles of the normal to the alignment reference flat will be measured with respect to the Spacecraft coordinate system.

[1] Component alignment, when required, shall be accomplished on the Spacecraft using an alignment cube on the component and suitable optical tooling.
[2] The alignment cube shall be located on the component such that there exists a direct line of site

along all three axes normal to the alignment cube with points outside the fully integrated Spacecraft.
[3] The alignment cube corners shall be positioned on the component such that its axes are along the axes of the component reference frame.

4.6.3 Alignment Cubes/Mirrors

[1] Alignment measurements shall be made using optical techniques and optical mirrors on all components requiring alignment.
[2] The component shall contain an alignment cube or, as a minimum, three orthogonal reference mirrors at least 1.0 inch (6.5 cm^2) square.
[3] The alignment cube flatness shall be within 1/4 wavelength of sodium–D visible light.
[4] In addition, its orthogonality shall be to within ±1 arcsec.
[5] The cube/mirrors shall be located so as to be visible for alignment establishment purposes at all stages of integration with the Spacecraft.

4.7 Mechanisms

4.7.1 Caging

[1] Mechanisms which require caging shall be capable of being caged remotely or by insertion of temporary locking devices for Spacecraft balance and handling operations.
[2] The component shall not require EPS–supplied power to maintain a caged condition.

The caging mechanism shall be capable of restraining all motions in a static or sinusoidal field environment in any of three axes at the
[3] load, [4] vibration, and [5] shock levels specified in Section 6.3 of this document.

4.7.2 Electro–Explosive Devices (EEDs)

[1] All EED mounting and connection interfaces shall be such that a shorting device may be installed or removed at each EED interface.
All EEDs shall be capable of being
[2] installed, [3] removed, [4] exchanged, or [5] replaced by a dummy device without disassembly of the Major Assembly and/or component to which the device is mounted.
[6] EEDs shall not impart shock levels at the Spacecraft interface greater than the minimum value specified in the respective Major Assembly performance specification.

4.8 Launch Configuration Dynamic Characteristics

[1] Components shall be designed with a minimum fixed–base natural frequency (at mounting interface) of 100 Hz for components weighing less than 200 lbs, and
[2] 80 Hz for components weighing 200 lbs or more
[3] Major Assemblies shall be designed to minimum fixed base natural frequency as defined in their respective performance specifications.

4.9 Structural Criteria

4.9.1 Design Factors of Safety

[1] Factors of Safety for Flight components, Qualification Test Models, and Engineering Test Models shall be as specified herein.
[2] The factors of safety in lines [3] and [4] below shall be applied to limit loads to derive yield and ultimate stresses. Limit load is defined as the maximum load expected to occur in all phases of flight.
[5] Component strength analysis for qualification or protoflight level random vibration test loads shall use a minimum design factor of safety of 1.15 for yield and 1.25 for ultimate.
[6] The minimum design Factors of Safety (FS) for test verified components shall be 1.25 for yield and 1.40 for ultimate.
[7] Components which use analysis only for structural verification shall use a minimum design factor of safety of 2.0 for yield and 2.6 for ultimate.
[8] In lieu of specific values developed through a coupled loads analysis the values specified in Sections 6.3.3 and 6.3.5 shall be used for preliminary design of components.
[9] Component strength analysis for shock test loads shall use a minimum design factor of safety of 1.0 for all tests.
[10] Margin of safety (MS) for the detailed stress analysis shall be greater than or equal to zero and shall be calculated as follows:

$$\text{MS yield} = \frac{\text{Allowable yield stress or force}}{\text{Limit stress or force x FS yield}} - 1$$

$$\text{MS ultimate} = \frac{\text{Allowable ultimate stress or force}}{\text{Limit stress or force x FS ultimate}} - 1$$

[11] Buckling, crippling and shear failures shall be considered as ultimate failures.
[12] When alignment of components is critical to mission success, the micro–yield or other material allowable shall be used in the yield equation.

4.9.1.1 Pressurized Equipment

[1] Pressure vessels shall be designed in accordance with Section 5, approach A of MIL–STD–1522A, "Standard General Requirements for Safe Design and Operation of Pressurized Missile and Space Systems," May 1984. (A component shall be considered a pressure vessel if it:

a. has fluid storage as its primary purpose, andcontains a minimum stored energy of 14,240 ft–lb, or

b. contains a fluid that will create a mishap if released, or

c. will experience a design limit pressure greater than 100 psi.)

[2] All safe–life analyses shall be conducted in accordance with MIL–STD–1522A and GSFC–731–0005–83B.
[3] Where pressure regulators, relief devices, and/or a thermal control system (e.g., heaters) are used

to control pressure, collectively they must be two–fault tolerant from causing the pressure to exceed the Maximum Design Pressure (MDP) of the system.
[4] The factors of safety in Table III shall be used in the design of pressurized equipment.
[5] Components which are listed on Table III which are not classified as pressure vessels shall meet the requirements of section 5.3 of MIL–STD–1522A.

4.10 Tooling

4.10.1 Optical Tooling

Components which require separate optical tooling to define the alignment reference as flat shall provide the optical tooling for alignment measurement on the Spacecraft.

4.10.2 Handling Fixture

A handling fixture shall be supplied with any Spacecraft elements weighing 35 lb (16 kg) or more for removal from the shipping container and installation on the Spacecraft.

4.10.3 Materials, Processes, and Parts

[1] Materials and processes shall be selected and controlled in accordance with Astro Space 20008650, EOS Program Approved Materials and Processes List (PAMPL).
[2] All program approved parts utilized on the EOS Program shall be used in accordance with Astro Space 20008648 EOS Program Approved Parts List (PAPL).

4.10.3.1 Approved Standard Parts, Materials and Finishes

[1] Wherever possible, approved standard parts and materials shall be used. Approved standard parts, derating factors and screening are listed in the PAPL, 20008648. Approved standard materials are listed in the PAMPL, 20008650. Approved standard finishes are listed in the PAMPL, 20008650.
[2] Application of materials and finishes shall be in accordance with the PAMPL, 20008650.
[3] Non–standard parts (i.e., not in the PAPL) which are required on the program shall be submitted for approval using the Non–Standard Part Approval Request (NSPAR) process outlined in the PAPL, Astro Space 20008648.
[4] Non–standard materials or processes (i.e., not in the PAMPL) which are required on the program shall be submitted for approval using the Non–Standard Material Approval Request (NSMAR) process outlined in the PAMPL, Astro Space 20008650.

4.10.3.2 Properties of Materials

[1] Material structural properties for metals shall be in accordance with the "A"–basis for defining metal properties in MIL–HDBK–5E,
[2] and for plastics, in accordance with MIL–HDBK–17, parts 1 and 2.

4.10.3.3 Stress Corrosion

[1] Metallic materials shall be chosen using the information contained in MIL–STD–889A regarding corrosion protection.
[2] In addition, materials that do not meet the requirements of MSFC–SPEC–522 to control stress corrosion and cracking shall be considered non standard and shall require processing in accordance with the PAMPL, 20008650.

4.10.3.4 Magnetic Materials

Materials shall be used such that the equipment magnetic property requirements as defined in Section 6.1.1.2 are met.

Table III. Factors of Safety for Pressurized Equipment

Engine structures and components				
Proof pressure	=	1.5	x	MDP[4]
Ultimate pressure	=	2.5	x	MDP
Hydraulic and pneumatic systems:				
(a) Lines and fittings, less than 1.5 in. (38mm) diameter				
Proof pressure	=	1.5	x	MDP
Ultimate pressure	=	4.0	x	MDP
(b) Lines and fittings, 1.5 in (38mm) diameter or greater				
Proof pressure	=	1.5	x	MDP
Ultimate pressure	=	2.5	x	MDP
(c) Pressure vessels (propellant tanks, pressurant tanks, reservoirs)[1]				
Proof pressure	≥	1.5[2]	x	MDP
Ultimate pressure	≥	2.0[5]	x	MDP
(d) Heat Pipes				
Proof pressure	=	1.5	x	MDP
Ultimate pressure	=	2.5	x	MDP
(e) Composite Pressure Vessels with load carrying metallic liner				
Proof pressure	=	1.5[2]	x	MDP
Overwrap Load Carrying Capacity (%)				
Below 35%	35% – 85%	Above 85%		
Ultimate pressure	2.0 x MDP	4.0 x MDP	5.0 x MDP	
(BBL unless carrying hazardous fluid in which case design shall be LBB)[3]				
(f) Pressure vessels (nickel hydrogen cells)				
Proof pressure	=	1.5	x	MDP
Ultimate pressure	=	3.0	x	MDP
(g) Other components (valves, disconnects, pumps, etc.)				
Proof pressure	=	1.5[2]	x	MDP
Ultimate pressure	=	2.5	x	MDP
(h) Pressurized System (CPHTS mini-loop)				
Proof pressure	=	1.5[2]	x	MDP
Ultimate pressure	Addressed by testing component parts			

[1] Does not include composite overwrap vessels.
[2] May use 1.25 if Safe Life analysis is performed on fracture critical pressurized lines, fittings, and components in lieu of the system level proof pressure test of 1.5 x MDP.
[3] BBL: Burst before leak, LBB: Leak-before-burst
[4] MDP: Maximum Design Pressure; the highest pressure, including transient pressures, defined by max relief pressure, max regulator pressure, or max temperature (including ground processing)
[5] Vessels which will not be pressurized during any ground transport to VAFB may use 1.5xMDP.

5 THERMAL INTERFACES

Component specification authors shall note exceptions to this specification in Section 6 of their respective component specifications.

5.1 General Thermal Control Concept

The Spacecraft thermal control subsystem (TCS) will maintain temperatures of Spacecraft system equipment interfaces within specified temperature limits under all external environments, as defined in Section 6 herein, and for all operating and non–operating modes during prelaunch, ascent, and on–orbit mission phases, as defined in the Contract End–Item Specification, PS20005396.

5.1.1 Spacecraft Thermal Control Subsystem

The Spacecraft structure, mechanisms, propulsion subsystem, and appendages will be thermally controlled by conventional passive techniques such as multilayer insulation (MLI), thermal isolation materials, and finish coatings, augmented by heaters. Other Spacecraft system equipment will be located in or on equipment modules, some of which will have local heat pipe radiators to acquire, transport, and reject heat locally from the equipment module.

5.2 Spacecraft/Component Thermal Interfaces

5.2.1 Equipment Module/Component Thermal Interfaces

5.2.1.1 Equipment Module/Component Conductive Interfaces

Equipment module components will be mounted to radiator or nonradiator honeycomb panels. Radiator panels will acquire, spread, and reject component heat to the external Spacecraft sink.

[1] The heat flux density for equipment module components mounted on radiator panels or panels directly coupled with radiator panels shall not exceed 1.0 W/in.^{2} (0.16 W/cm^2) for any square inch over the conductive mounting interface (contact area).
[2] The heat flux density for equipment module components mounted on nonradiator panels shall not exceed an average of 0.2 W/in.^{2} (0.76 W/cm^2) for any square inch over the conductive mounting interface (contact area).

5.2.1.2 Equipment Module/Component Radiative Interfaces

The external surface finish and emissivity of each component internal to an equipment module shall be as specified in the component ICD.

5.2.2 Instrument Accommodation Equipment Thermal Interfaces

5.2.2.1 Thermal Isolation Requirements

[1] All instrument accommodation equipment on the Spacecraft shall be conductively and radiatively isolated from the mounting interface.
[2] The maximum allowable heat transfer from/to the instrument accommodation equipment to/from the mounting interface shall be 0.01 W/in.^{2} (0.0016 W/cm^2) during instrument operational conditions. The mounting interface will be maintained between 0°C and 30°C during normal orbital operations.

5.2.3 Distributed Housekeeping Equipment Thermal Interfaces

The external surface finish and emissivity of each component not located in or on an equipment module shall be as specified in the component ICD.

5.3 Environmental Flux Parameters

Hot and cold case thermal analysis shall be based on maximum and minimum values of solar, albedo, and Earth infrared (IR) energy fluxes as defined in Section 6.4.2.

5.4 Thermal Control Hardware

5.4.1 Heaters

Heaters shall be capable of being enabled or disabled by ground command.

5.4.1.1 Heater Margin

Heaters shall be designed to include a 25% margin over the maximum projected heating requirements.

5.4.1.2 Heater Control

Heaters shall be designed to be controllable such that there is at least a 2°C deadband between the on and off set points.

5.4.2 Multilayer Insulation

Multilayer insulation (MLI) thermal blankets shall be used to cover those surfaces of the Spacecraft where radiative isolation is desired.

5.4.2.1 MLI Bakeout

All MLI materials shall be baked out per the requirements defined in the EOS Contamination Control Plan, PN20001412.

5.4.3 Thermal Control Coatings

All external thermal control coatings must be nondegradable or degradation limited over the design life of 5 years on orbit.

5.4.4 Temperature Sensors

Each temperature sensor shall be within its specified standard calibration curve on read–out to better than 1% over the qualification range of the unit when mounted to the surface being measured.

5.5 Spacecraft Equipment Temperature Requirements

A comprehensive list of component temperature limits will be contained in the Thermal Control Subsystem Specification.

[1] The Spacecraft equipment shall be designed to withstand without damage* the on–orbit temperatures defined in Table IV and the
[2] corresponding test levels as defined in the Verification Specification PS20005404.

*Damage is considered to be any change in the Spacecraft equipment which may degrade subsystems or components to performance levels below those defined in their respective specifications.

Table IV. Spacecraft Equipment Temperature Requirements

Equipment/Structure	On–orbit Allowable Temperature Range (°C) (measured at the mounting interface)
Components Mounted in or on an Equipment Module	–10 to +50 Operational –25 to +60 Non–operational
External Mechanisms (e.g., gimbals, drives)	–25 to +70 Operational –50 to +70 Non–operational
Secondary Structure (e.g., Equipment Module Structures)	–50 to +60 Operational –60 to +70 Non–operational
Internal Core Equipment (e.g., torque rods, harness)	–20 to +50 Operational –25 to +60 Non–operational
Instrument Accommodation Equipment	–10 to +50 Operational –25 to +60 Non–operational
Distributed Housekeeping Equipment (Not included in an Equipment Module)	–10 to +50 Operational –25 to +60 Non–operational
Propellant wetted components	+ 12 to +40

Note: This table represents the maximum expected flight levels. Components will experienc higher levels during testing. Test levels are specified in the VS, PS20005404.

(This page intentionally left blank.)

6 ENVIRONMENTAL INTERFACES

This Section describes the environments which the Spacecraft will experience during prelaunch, launch and ascent, and on–orbit operations. To prove compliance, elements will be tested to the test levels in Astro Space PS20005404, Verification Specification, which correspond to the environments specified herein.

[1] Component specification authors shall note exceptions to this specification in Section 6 of their respective component specifications.
[2] All Spacecraft elements and equipment shall meet specified performance requirements with exposure to the environments described herein.
[3] All Spacecraft elements and equipment shall be designed to withstand exposure to the applicable test environments specified in the Verification Specification, PS20005404.

6.1 General Requirements

6.1.1 Electromagnetic Interference (EMI)

6.1.1.1 Electric Fields

[1] Components shall meet the electric field emissions requirements in the Equipment Radiated Emissions (RE02, RE01/RE04) section of the Equipment EMI Requirements in the EMC Control Plan, PN20005869.
[2] Components shall meet the requirements of the Radiated Susceptibility (RS03) Electric Fields section and the
[3] Radiated Susceptibility On–Orbit Environment section of the Equipment EMI Requirements in the EMC Control Plan, PN20005869.

6.1.1.2 Magnetic Fields

[1] Components shall meet the magnetic field emission and
[2] magnetic properties requirements in the Equipment Radiated Emissions and Equipment Radiated Properties sections respectively of the Equipment EMI Requirements in the EMC Control Plan, PN20005869.
[3] Components shall meet the requirements of the Radiated Susceptibility (RS01) Magnetic Fields section of the Equipment EMI Requirements in the EMC Control Plan, PN20005869.

6.2 Mission Environment

The pre–mission environments include the environments for integration, transportation, launch processing, storage, and handling activities.

[1] Expected environments which components would experience before delivery for integration with other Spacecraft flight equipment shall be defined in the respective component specifications if those environments exceed the environments defined herein.

6.2.1 General

6.2.1.1 Component Degaussing

Spacecraft components shall not require degaussing after installation on the Spacecraft.

6.2.1.2 Cleanliness

[1] The component design shall comply with the requirements of Astro Space PN20001412, the Contamination Control Plan (e.g., withstanding periodic cleaning), and
[2] shall be capable of withstanding a class 100,000 environment throughout its prelaunch life except where specified otherwise herein,
[3] and compatible with maintaining a class 10,000 environment throughout its prelaunch life.

6.2.1.3 Temperature and Humidity

Each component shall be capable of withstanding exposure to the temperature/humidity conditions described in Table V during integration at Astro Space East Windsor facilities, during transportation to VAFB, and during VAFB off–pad operations.

6.2.2 Storage Environment

Components shall be capable of being stored due to an unscheduled delay in the launch schedule for a period of up to five years after completion of component acceptance test under the following conditions of humidity and temperature: 30% to 50% relative humidity and 66–77°F (19–25°C) temperatures.

6.2.3 Transportation and Handling Accelerations

Spacecraft equipment shall not suffer any damage when exposed to the transportation and handling environments described herein.

6.2.3.1 Transportation

[1] The acceleration environment for air transportation and ground transportation in air–ride trailers shall be assumed to be as follows if the following axes represent the axes of the transport vehicle:

Vertical	±3.0 G^s
Lateral	±2.0 G^s
Longitudinal	±3.5 G^s

Table V. Temperature/Humidity Limits

Environmental Parameter	Controlled Environment
Temperature Range, °F (°C)	55–75(13–24)
Temperature Transients (Max), °F (°C)/hr	±5(±2.8)
Relative Humidity%	30 to 50

[2] Components choosing to be transported in an non–air–ride trailer shall assume vertical accelerations of at least ±6.0 Gs.
[3] The accelerations along each axis shall be applied separately as static loads.

6.2.3.2 Handling Vibration and Shock

[1] After delivery for Integration and Test, components shall operate as specified after exposure to handling vibration and shock environments when these don't exceed 50% of the protoflight test levels specified in the Mechanical Testing section of EOS–AM Spacecraft Verification Specification, PS20005404.

6.2.4 On–Pad Environment

6.2.4.1 Temperature

Components shall be capable of withstanding temperatures between 45–75°F (7–24°C) and 30%–50% relative humidity during all on–pad operations.

6.2.4.2 Lightning

[1] EEDs and firing circuitry shall be designed to preclude electrical overstress or any other damage when subjected to the near field of a lightning strike as defined in Figure 16.
[2] EEDs and firing circuits shall be designed to preclude electrical overstress when the lightning near field couples to interfacing cables.

6.3 Launch and Ascent Environment

All Spacecraft equipment shall operate to specifications after exposure to the worst–case environments induced by the Atlas IIAS and Titan IV as defined below.

Note: Test levels for the following environments are defined in the Verification Specification, PS20005404. Test levels are often more extreme than the maximum expected flight environments (the environments defined in this document).

6.3.1 Thermal

6.3.1.1 Internal Payload Fairing Temperatures

Spacecraft assemblies and exposed components shall not suffer any damage when exposed to the launch vehicle fairing transient temperature profiles given in Figure 17.

6.3.1.2 Free Molecular Heating

Spacecraft components and assemblies shall operate to specification after exposure to a free–molecular heating rate which is less than or equal to 360 BTU/hr–ft^2 (409 J/hr–cm^2) at payload fairing release and which then decreases to less than 140 BTU/hr–sqft within 30 sec.

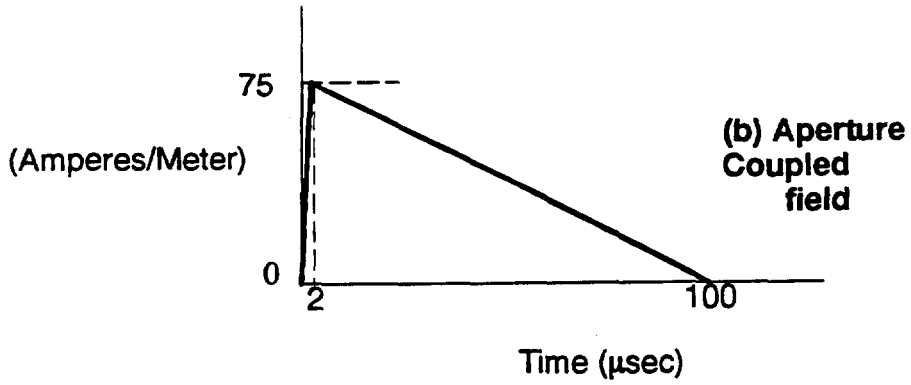

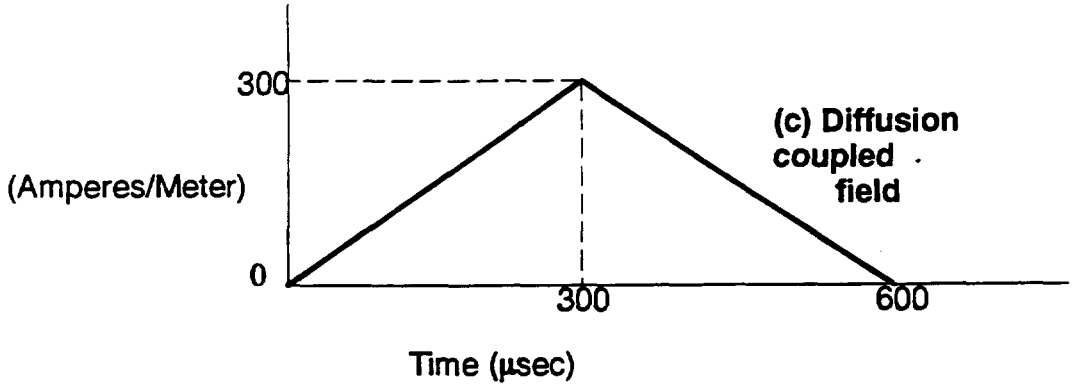

Figure 16. Near–Field Lightning Environment

6.3.2 Pressure

The Spacecraft components shall withstand the internal payload fairing pressure decay during ascent that will not exceed 0.5 psi/sec, (3.4 kPa), except for a perturbation not exceeding three seconds in duration where the rate will not exceed 0.76 psi/sec, (5.2kPa).

6.3.3 Acceleration

[1] Components mounted directly to the Spacecraft primary structure shall withstand exposure to the limit accelerations defined in their performance specification.
[2] Spacecraft components mounted to Instrument secondary structure shall withstand exposure to the limit accelerations defined in Figure 18 unless otherwise justified by analysis.
[3] Equipment module mounted components shall withstand launch limit accelerations as defined in Figure 18 unless otherwise justified by analysis.
[4] All Spacecraft components shall be able to withstand the random vibration specified in Section 6.3.5.

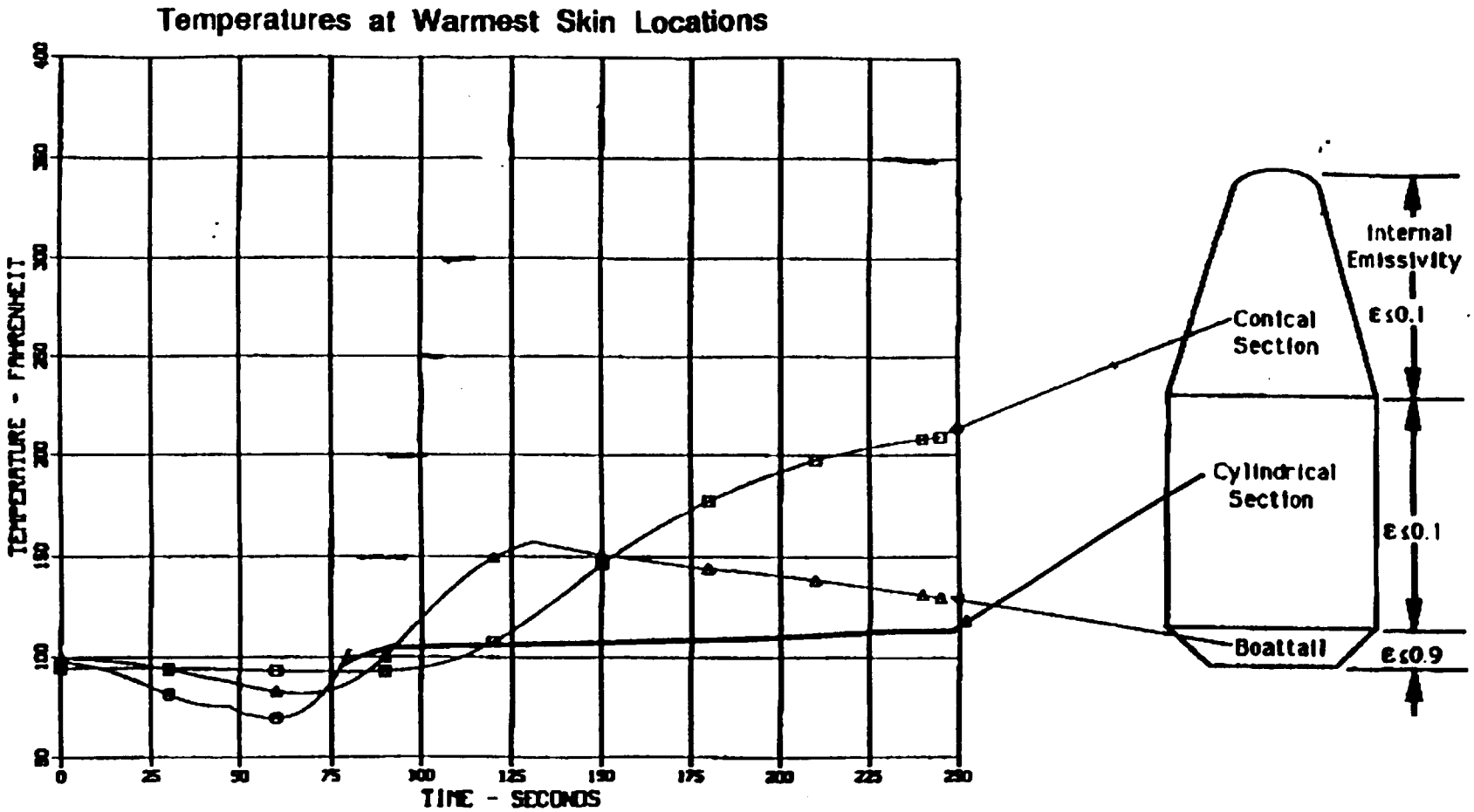

Figure 17. Fairing transient Temperature Profile

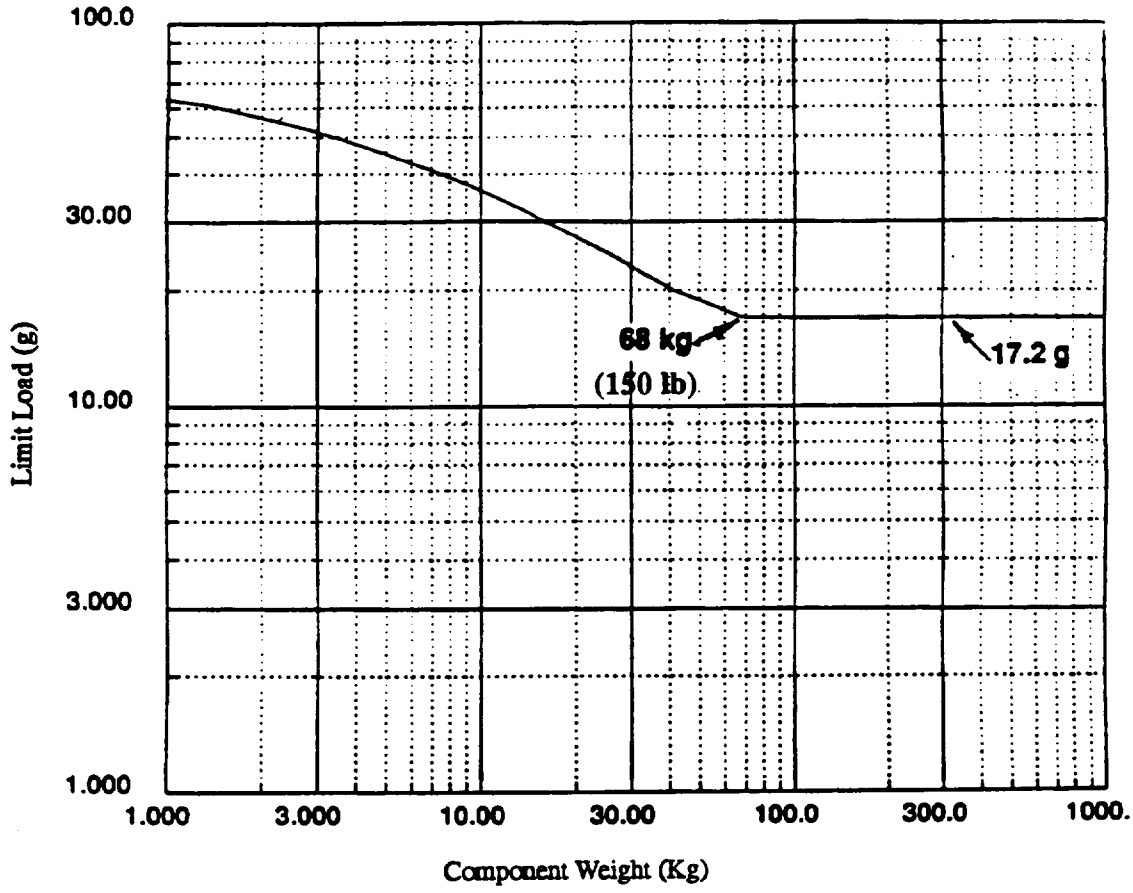

Figure 18. Predicted Limit Loads

NOTE: This figure represents the maximum expected flight levels. Components will experience higher levels during testing. Test levels are specified in the VS, PS20005404.

6.3.4 Acoustic Field

All components shall withstand the fairing acoustic environment shown in Table VI.

6.3.5 Random Vibration

[1] Spacecraft components shall withstand the random vibration levels defined in their own performance specifications.

6.3.6 Sine Vibration

[1] Components in equipment modules shall withstand in their launch configuration the sine vibration environments imposed on them during major assembly testing.
[2] The SMS shall ensure that the sine vibration environment imposed on the components during major assembly testing will be enveloped by the limit loads environment described in Figure 18.

Table VI. Maximum Expected Flight Acoustic Levels

1/3 Octave Center Frequency (Hz)	Noise Level (dB) re: 20 uN/M2	1/3 Octave Center Frequency (Hz)	Noise Level (dB) re: 20 uN/M2
25	——	800	124.3
32	129.0	1000	122.5
40	130.5	1250	121.0
50	131.0	1600	119.0
63	132.0	2000	117.5
80	132.5	2500	116.0
100	133.0	3150	114.0
125	133.0	4000	112.5
160	132.7	5000	110.5
200	131.9	6300	108.5
250	131.0	8000	109.7
315	130.2	10000	110.5
400	128.8		
500	127.5		
630	126.1	**Overall**	**142.8**

Note: This figure represents the maximum expected flight levels. Components will experience higher levels during testing. Test levels are specified in the VS, PS20005404.

6.3.7 Shock

[1] Spacecraft components shall meet performance requirements following exposure to the shock environment specified in its own performance specification.

6.3.8 Contamination Control

Spacecraft components and assemblies shall withstand a particulate contamination within the payload fairing of FED–STD–209 Class 10,000 or better conditions.

6.3.9 Corona Discharge Avoidance

[1] Components which must be powered during ascent shall use high–voltage design techniques to preclude corona discharge during the transition through critical pressure.

[2] Components shall operate only at levels below the curve in Figure 19. This curve depicts the dielectric breakdown distance and air pressure product versus applied voltage at which arcing occurs.

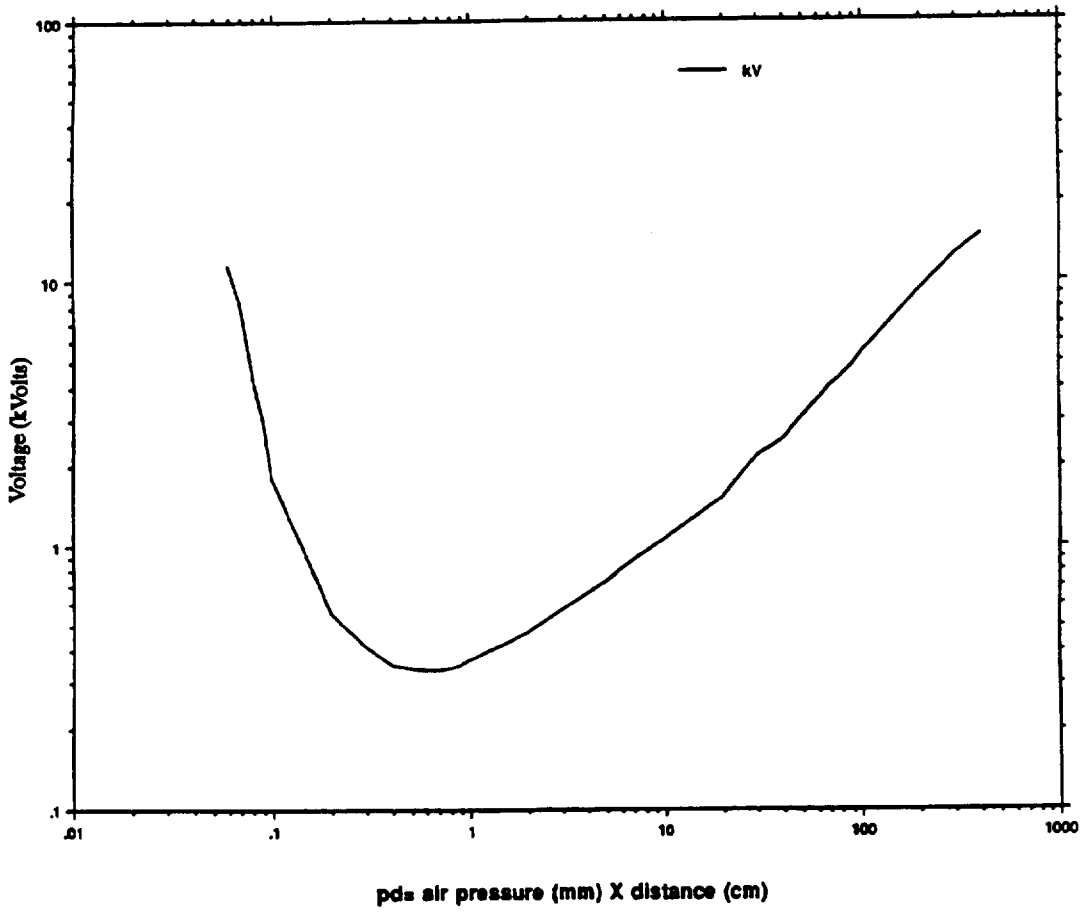

Figure 19. Corona Discharge Threshold Levels

6.3.10 Resistance to Lightning

EEDs and firing circuitry shall perform as specified after exposure during launch to the lightning environment defined in paragraph 6.2.4.2.

6.4 On–Orbit Environment

The Spacecraft's components shall function within specification when exposed to the on–orbit environments described herein.

The Spacecraft is baselined to occupy a sun–synchronous circular orbit with a 98.2° inclination at 705 km orbit for its operations. The Spacecraft orbital reference coordinate frame shall be as specified in paragraph 4.1.

During the Orbit Acquisition Initialization Phase of the mission, the Spacecraft will occupy a sun–synchronous elliptical injection orbit with minimum perigee and apogee of 550 km and 686 km, respectively. The orbit will have a 98.2° inclination. The Spacecraft orbital reference coordinate frame shall be as specified in paragraph 4.1.

Note: Test levels for the following environments are defined in the Verification Specification, PS20005404. Test levels are often more extreme than the maximum expected flight environments (the environments defined in this document).

6.4.1 On–orbit Shock

[1] Components employing pyro devices shall withstand their own imposed shock levels.

6.4.2 Thermal

[1] Components shall withstand the interface temperature ranges specified in paragraph 5.5
[2] External Spacecraft components shall function within specifications when subjected to the thermal flux design parameters defined below:

Thermal Flux Source	Minimum	Maximum
Solar Radiation	0.856 W/in^2	0.915 W/in^2
Albedo	0.311	0.336
Earth Infrared Radiation	0.141 W/in^2	0.157 W/in^2

6.4.3 Beta Angles

The range of potential orbit clock angles is 1030 hrs ±15 min. for the descending node crossing. The Beta angle (angle between the orbit plane and the solar vector) varies from 13° to 31° for the Spacecraft's range of descending node crossings.

6.4.4 Pressure

The Spacecraft subsystems, assemblies, and components shall operate within specification requirements in a 10^{-6} Torr vacuum environment.

6.4.5 Acceleration

All components, including deployed appendages, shall withstand an acceleration of .0015Gs as a result of main thruster engine firing.

6.4.6 Charged Particles

[1] Components, assemblies, and fabrication materials shall operate within specification during exposure to the radiation environment defined by the curve labeled "Total Dose x Margin of 2" in Figure 20.
[2] Equipment modules shall provide the equivalent shielding of 40 mil of Aluminum for their internal components against the environments specified in this section.
Additional shielding (box walls, PC boards, device packages, spot shields, etc.) provided by the components may further attenuate the environments specified below.

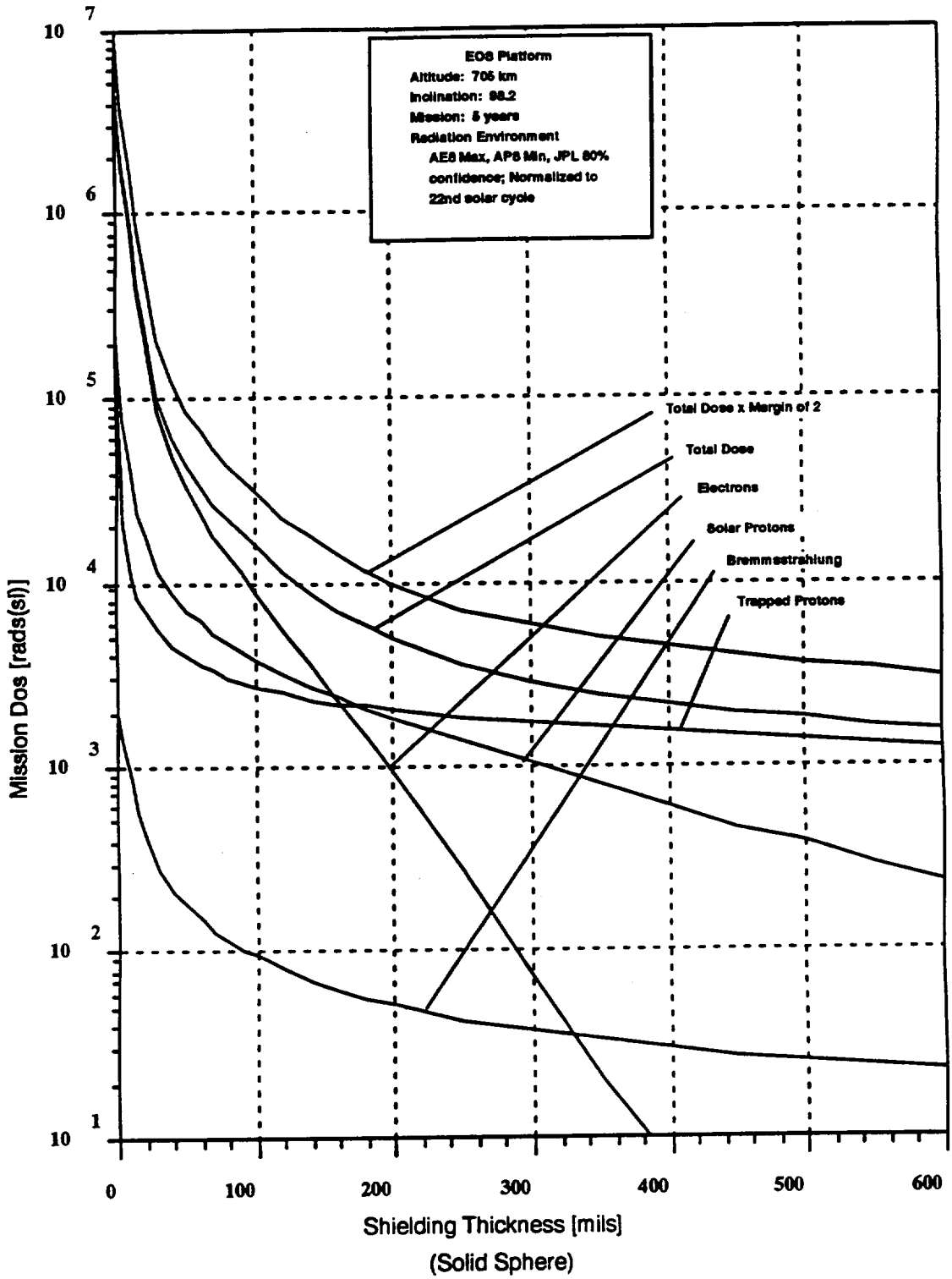

Figure 20. Total Ionizing Dose Radiation Environment

6.4.6.1 Single Event Upset

Charged particle environments may induce Single Event Upsets. A Single Event Upset (SEU) is a change of state or transient induced by a cosmic ray or proton in digital or certain analog devices. Vulnerable analog devices are optoelectronic devices, analog to digital converters (ADCs), and sense amplifiers. The change may affect information stored in the device or in a surrounding interface device.

Electronic components shall be designed, where possible, to be immune to SEU induced performance anomalies in the
[1] Solar Flare Proton,
[2] Trapped Proton, and
[3] Cosmic Ray Charged Particle environments defined below.
(Components may achieve immunity to SEU induced anomalies by using error detection and correction or by using parts which are immune to SEU or by demonstrating that a given failure is a non–credible failure. Devices with a Linear Energy Transfer (LET) threshold (LET_{th})> 100 MeV cm^2 mg^{-1} are immune to cosmic ray effects. Devices with an $LET_{th} \geq 10$ MeV cm^2 mg^{-1} are immune to trapped and solar flare proton effects. LET_{th} is defined as the minimum LET required to cause a SEU.)
[4]Where new LET_{th} data are taken for EOS, 1×10^7 ions/cm^2 shall be used to establish the threshold for the device being tested.
[5] Where immunity to SEU is not possible, the induced anomalies shall not require ground intervention for correction.

6.4.6.2 Solar Flare Protons

Components shall operate per the requirements of paragraph 6.4.6.1 during three flares each lasting four days. The environment for a single solar flare is defined in Figure 21.

6.4.6.3 Trapped Protons

[1] Components shall operate per the requirements of paragraph 6.4.6.1 during exposure to the trapped, free space proton environment defined in Figure 22.
[2] Components shall operate within specification during exposure to a peak proton flux environment over the South Atlantic Anamoly when the flux is defined as follows:

Proton Energy	Flux
≥ 10 MeV	5.8×10^3 cm^{-2} sec^{-1}
≥ 40 MeV	4.3×10^3 cm^{-2} sec^{-1}
≥ 100 MeV	2.2×10^3 cm^{-2} sec^{-1}

6.4.6.4 Cosmic Ray Charged Particles

Components shall operate per the requirements of paragraphs 6.4.6.1 and 6.4.6.5 during exposure to the Cosmic Ray environment defined in Figure 23.

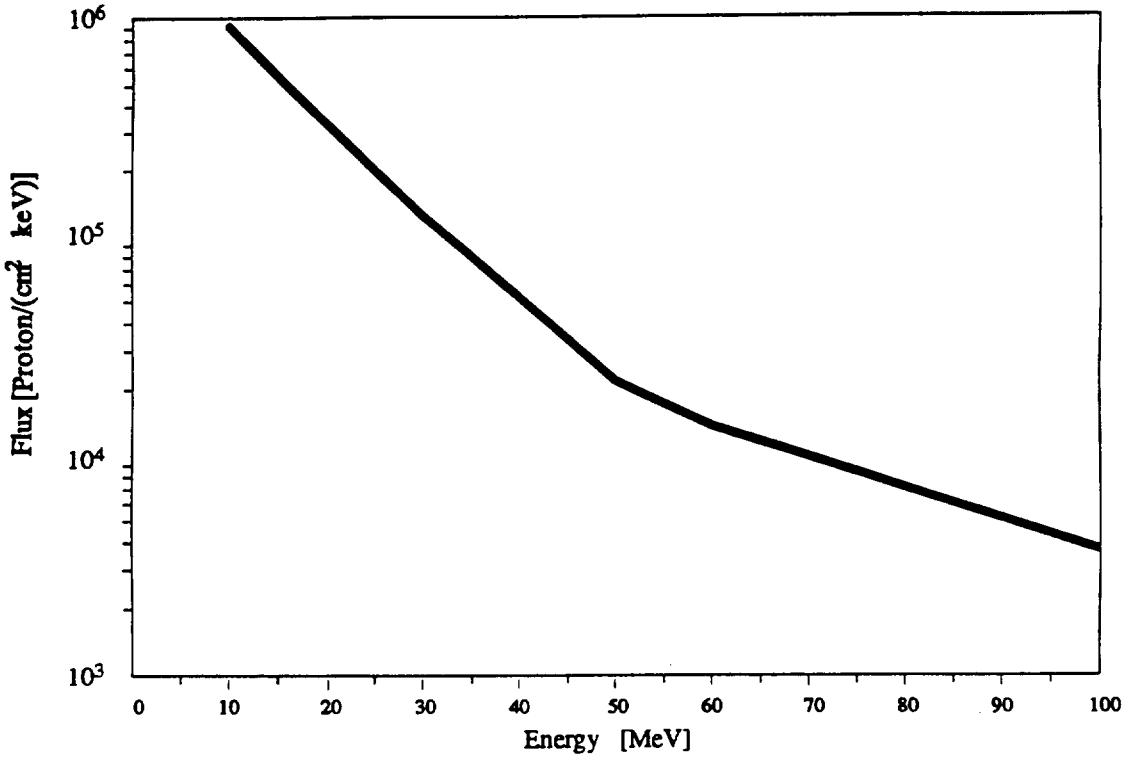

Figure 21. Solar Flare Proton Fluence

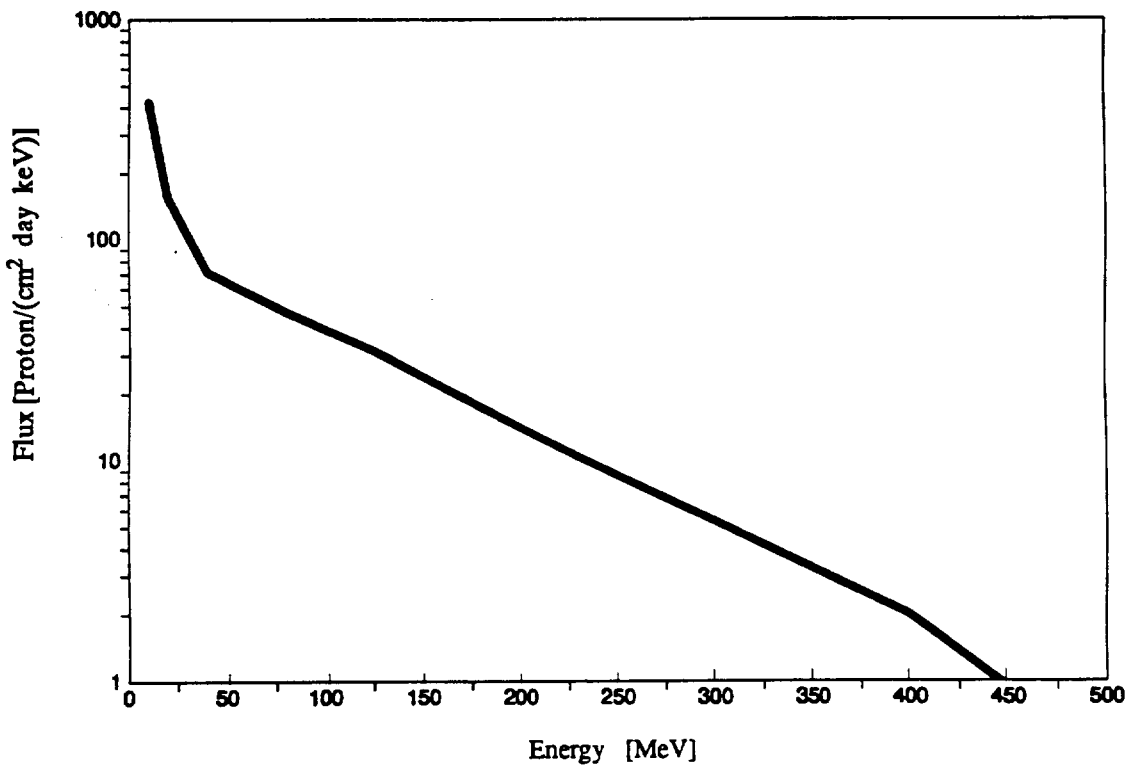

Figure 22. Daily Average Trapped Proton Flux

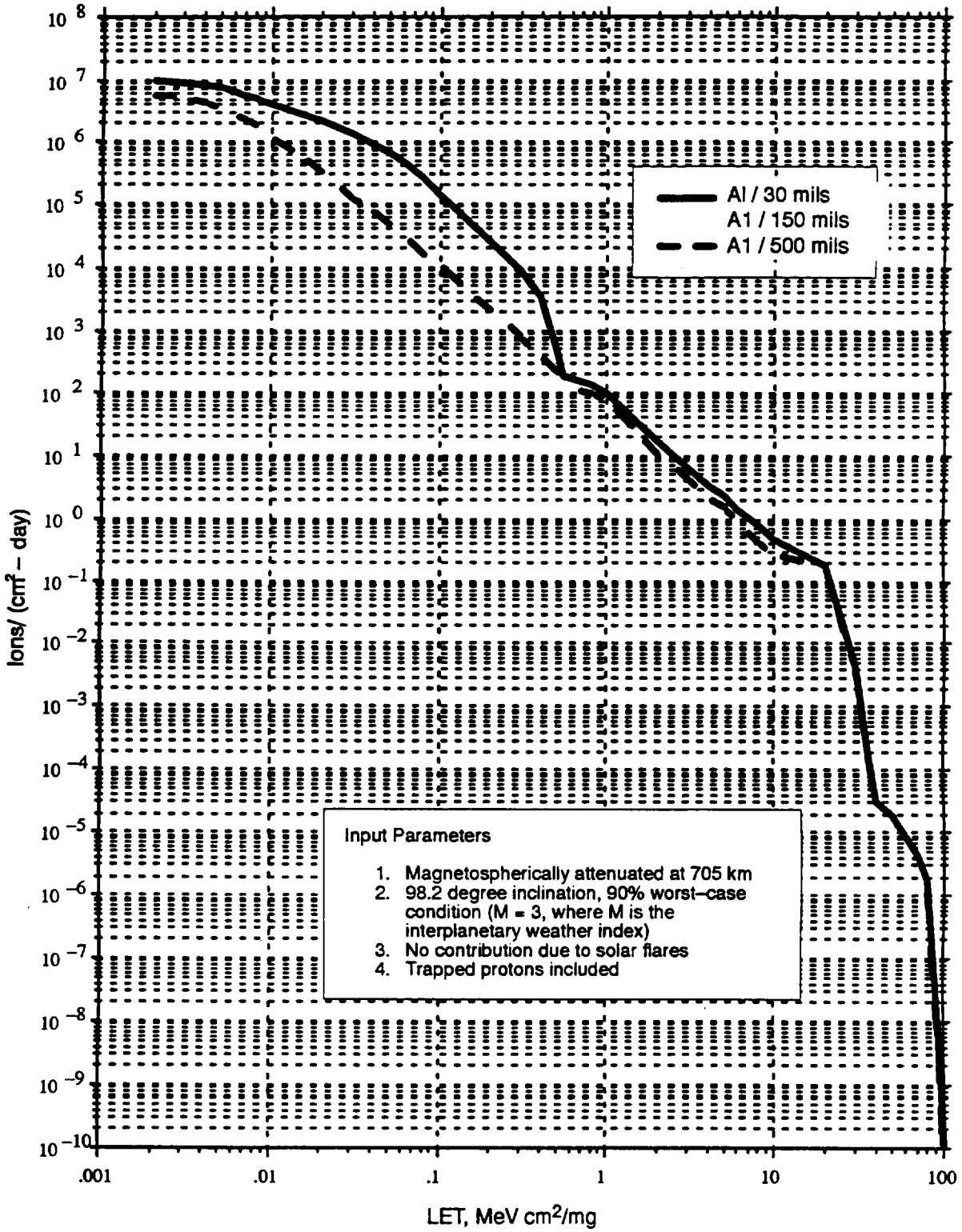

Figure 23. Cosmic Ray Linear Energy Transfer (LET) Spectrum

6.4.6.5 Single Event Latchup (SEL)

SEL is a cosmic ray induced anomalous state in an integrated chip, characterized by high current and degraded performance in that chip.

[1] Where possible, electronic components shall be immune to SEL, secondary breakdown, other thermal runaway effects, and snap–back induced by cosmic ray ions.
[2] This shall be accomplished, where possible, through the selection of electronic parts immune to these effects.
[3] Where immunity is not possible, appropriate latchup detection and recovery circuitry shall be incorporated in order to preclude permanent component damage.
[4] Any consequent operational disruption shall not cause the Spacecraft to perform outside its specified levels.

6.4.7 Micrometeoroids and Space Debris

6.4.7.1 Micrometeoroids

[1] Spacecraft and Instrument external surfaces shall be designed to meet performance requirements after exposure to the meteoroid fluence shown in Figure 24.
[2] Particle density shall be assumed to be

$2.0\ g/cm^3$ for particles with mass $< 10^{-6}g$
$1.0\ g/cm^3$ for particles with mass $10^{-6}g$ though $10^{-2}g$ and
$0.5\ g/cm^3$ for particles with mass $> 10^{-2}g$

and have a velocity of 19 km/sec.

6.4.7.2 Space Debris

[1] Spacecraft external surfaces shall be designed to meet performance requirements after exposure to orbital man–made debris. The Space debris fluence is shown in Figure 25.
[2] Fluence upon a surface on a ram face (surface facing the direction of the Spacecraft velocity vector) shall be determined by multiplying these fluences by 3.41. Multiples for components on surfaces other than ram surfaces are given in Table VII.
[3] The debris velocity shall be assumed to be 10 km/sec.
[4] Diameter shall be related to density by the following equations:

density = $4.0\ g/cm^3$ for diameters < 0.62 cm and
density = $2.8 * \text{diameter}^{-0.74}$ for diameters ≥ 0.62 cm and

[5] using the above density equations to determine volume, particle mass shall be related to diameter by the spheric volumetric equation.

6.4.8 Contamination

[1] Components shall meet the requirements of the Contamination Control Plan, PN20001412.
[2] Component surfaces exposed to the environment external to the Spacecraft shall operate as specified for end–of–mission with an accumulated particulate contamination of $8.2\ mg/ft^2$ [3] and accumulated molecular contamination of $8\ mg/ft^2$
unless provided a more benign environment in the "EOS External Surface Cleanliness Level Goals" table of the Contamination Control Plan, PN 20001412.

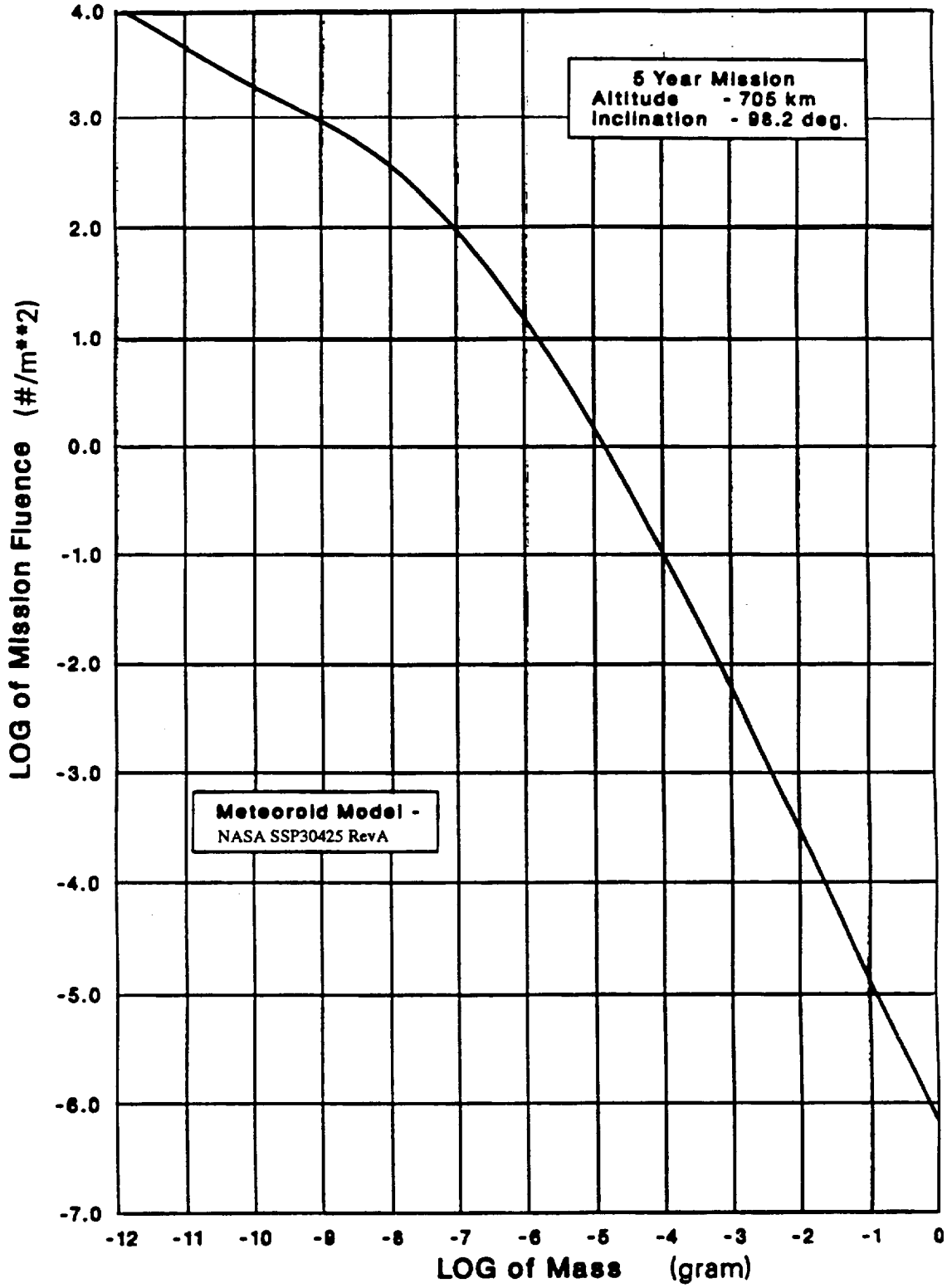

Figure 24. Meteoroid Fluence

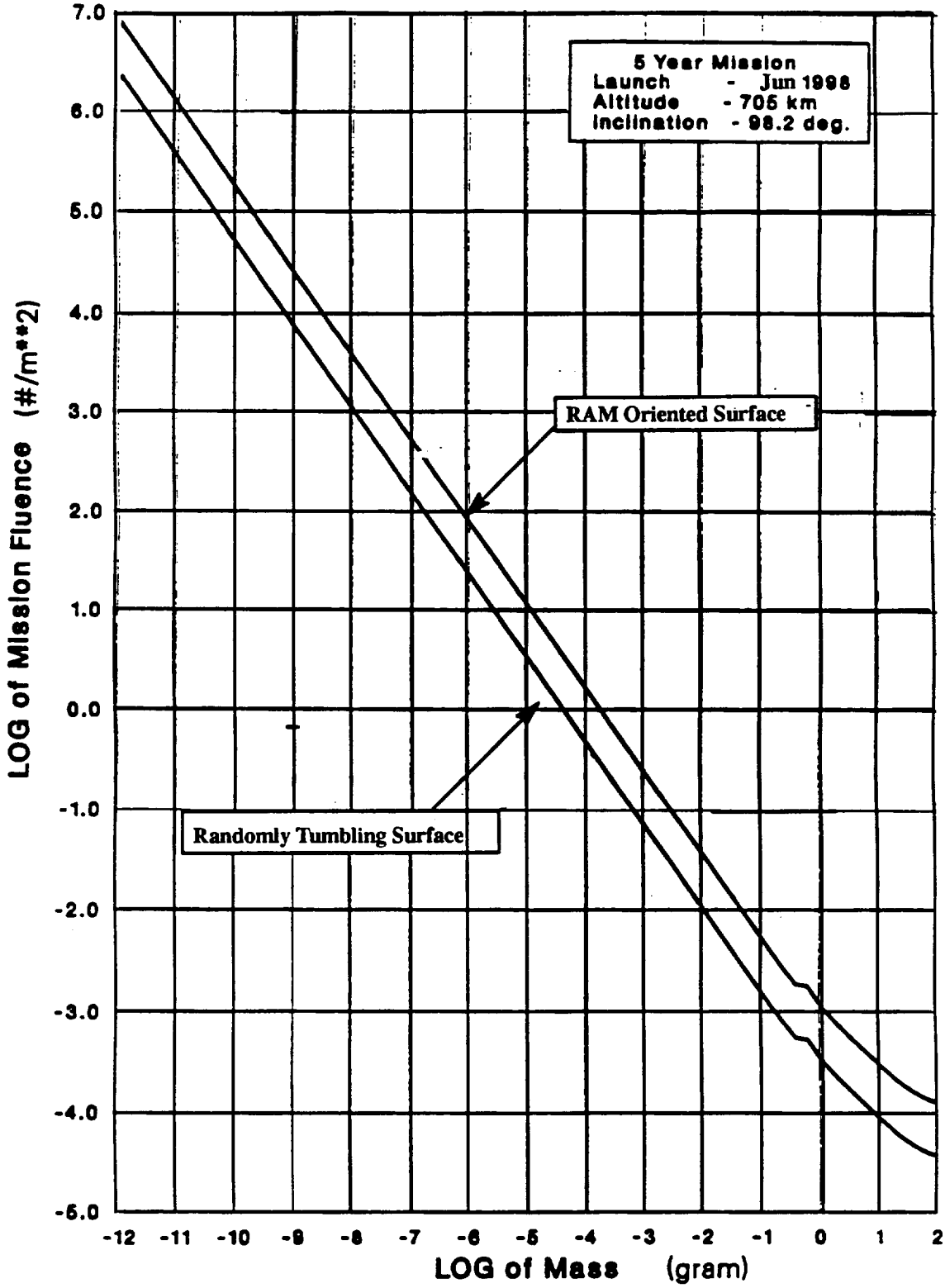

Figure 25. Space Debris Fluence

Table VII. Multiples for Space Debris Fluence on Oriented Surfaces (i.e., Surfaces with a Specified Attitude)

Azimuth Angle	Zenith Angle 90 105	75 or 120	60 or 135	45 or 150	30 or 165	15 or 180	0 or
0	3.413	3.296	2.955	2.413	1.706	0.883	0.000
15	3.301	3.188	2.858	2.334	1.650	0.854	0.000
30	2.987	2.885	2.586	2.112	1.493	0.773	0.000
45	2.503	2.418	2.168	1.770	1.252	0.648	0.000
60	1.889	1.825	1.636	1.336	0.945	0.489	0.000
75	1.302	1.257	1.127	0.920	0.651	0.337	0.000
90	0.864	0.834	0.748	0.611	0.432	0.224	0.000
105	0.418	0.404	0.362	0.296	0.209	0.108	0.000
120	0.183	0.177	0.158	0.129	0.091	0.047	0.000
135	0.090	0.087	0.078	0.064	0.045	0.023	0.000
150	0.031	0.030	0.027	0.022	0.016	0.008	0.000
165	0.004	0.004	0.004	0.003	0.002	0.001	0.000
180	0.000	0.000	0.000	0.000	0.000	0.000	0.000

6.4.8.1 Propulsion System By–Products

[1] Components shall meet performance requirements after exposure to exhaust species from the monopropellant hydrazine thrusters. Table VIII depicts the plume composition at locations 90° from the plume centerline.

6.4.8.2 Materials Outgassing

[1] Materials used in hardware shall be selected in accordance with Section 4.10.3 of this document.
[2] To reduce outgassing thermal blankets and all wiring harnesses shall be subjected to thermal vacuum bake–out in accordance with the Contamination Control Plan, PN 20001412.

Table VIII. Plume Byproducts from Hydrazine Thrusters*

Species	Mass Fraction	Mass flux / thruster burn	Burn Duration
NH_3	0.4151	4.05×10^{-7}	900 sec (15 min)
H_2O	0.0313	3.05×10^{-8}	
N_2H_4	0.0030	2.93×10^{-9}	
N_2	0.5249	5.12×10^{-7}	
H_2	0.0258	2.52×10^{-8}	
Total	1	9.76×10^{-7}	

Note: Accumulation on surfaces will be negligible since the evaporation rate will be close to equalling the deposition rate.

6.4.8.3 Atomic Oxygen

Exposed Spacecraft materials shall withstand the atomic oxygen environment of 8.3×10^{20} atoms/cm^2 (ram face value), unless, for surfaces not on the ram face, an analysis is performed, based on view factor and scattering, which predicts a lower density environment.

6.4.9 Plasma Interaction Effects

External Spacecraft materials shall not give rise to arcing, dielectric breakdown, or glow discharges when operating at any voltage between 0 and the maximum voltage specified for that component, and when exposed to ambient plasma given in Table IX.

Table IX. Plasma Environment

Particle	Density	Temperature
Ambient electrons	10^3–2×10^6 cm^{-3}	0.10 – 0.39 eV
Ambient positive ions	10^3–2×10^6 cm^{-3}	0.07 – 0.34 eV
* High energy electron flux	$10^8 - 10^{10}$ cm^{-3} sec^{-1} Sr^{-1}	14 – 30 keV

*This occurs during periods of auroral arcs. The spacecraft is exposed to auroral arc environments for $\leq$ 30 sec per encounter.

6.4.10 Sun–Pointing Safe Mode

The HGA and Solar Array major assemblies shall survive, or perform as specified, in the thermal environment imposed on them when the following conditions occur simultaneously:

a. the solar array is stationary

b. the solar array cell plane normal vector is aligned with the solar vector

c. the –x vector of the spacecraft is aligned with the solar vector

d. in the mission orbit, the angular pointing error between the solar vector and the cell–side array normal does not exceed 155 about the pitch (Y) axis or 185 about the yaw (Z) axis

OR

in the injection orbit, the angular pointing error between the solar vector and the cell–side array normal does not exceed 20° about the pitch (Y) axis or 30° about the yaw (Z)

e. the Spacecraft roll rate about the X–axis is not controlled (i.e., the rate might or might not be zero).

(This page intentionally left blank.)

7 ACRONYM LIST

AWG	American Wire Guage
Al	Aluminum
BBL	Burst–Before–Leak
BDU	Bus Data Unit
BTU	British Thermal Units
C	Centigrade Celsius
CDR	Critical Design Review
CEI	Contract End–Item Specification
CLK	Clock
cm	Centimeter
CMD	Command
CPHTS	Capillary Pumped Heat Transport System
DAS	Direct Access System
dB	Decibel
dc	Direct Current
EAS	Electrical Accommodation Subsystem
ECL	Emitter–Coupled Logic
EED	Electroexplosive Devices
EMC	Electromagnetic Compatibility
EMI	Electromagnetic Interference
EOS	Earth Observing System
EPC	Electrical Power Conditioner
EPS	Electrical Power Subsystem
ESD	Electrostatic Discharge
F	Farenheit
FDB	Fuse and Distribution Box
ft	Foot
FS	Factor of Safety
g	gram
G	Gravity

GIS	General Interface Specification
GIIS	General Instrument Interface Specification
GN	Ground Network
GSFC	Goddard Space Flight Center (NASA)
GSE	Ground Support Equipment
hr	Hour
Hz	Hertz
ICD	Interface Control Document,
in	Inch
I/O	Input/Output
IR	Infrared
J	Joules
kg	Kilograms
kHz	Kilo–Hertz
km	Kilometer
kPa	Kilopascal
lb	Pound
LBB	Leak–Before–Burst
lbf	Pounds of Force
LET	Linear Energy Transfer
LV	Launch Vehicle
m	Meter
mA	Milli–Amperes
MDP	Maximum Design Pressure
MeV	Mega Electron–Volt
mF	Milli–Farad
mg	Milligram
MHz	Mega Hertz
MLI	Multi–Layer Insulation
mm	Millimeter
MUX	Multiplexer
MS	Margin of Safety

mΩ	Milli–Ohms
N	Newton
NSI	NASA Standard Initiators
NSMAR	Non–Standard Material Approval Request
NSPAR	Non–Standard Part Approval Request
PAMPL	Program Approved Materials and Processes List
PAPL	Program Approved Parts List
PDR	Preliminary Design Review
PLF	Payload Fairing
PM	Propulsion Module
PPR	Primary Power Reference
PRA	Pyrotechnic Relay Assembly
psi	Pounds per Square Inch
RD	Requirements Document
RF	Radio Frequency
RS	Resistor, Series
SEL	Single Event Latchup
SEU	Single Event Upset
sq	square
Sr	Steradian
SRP	Signal Reference Plane
STS	Space Transportation System
TBR	To Be Resolved
TBD	To Be Determined
TBS	To Be Supplied
TCS	Thermal Control Subsystem
TDRSS	Tracking and Data Relay Satellite System
TLM	Telemetry
TONS	TDRSS On–board Navigation System
TSP	Twisted Shielded Pair
TP	Twisted Pair
VAFB	Vandenburg Air Force Base

Vdc	Volts – Direct Current
W	Watt
Z	Impedance
Ω	Ohm
μH	Micro–Henry
μsec	Micro–Seconds

PS20008617
CAGE No. 49671
05 August 1993

Performance Specification
Propulsion Subsystem for EOS–AM Spacecraft
(SP–701)

Prepared under:
Contract NAS5–32500
NASA Goddard Space Flight Center
Greenbelt, Maryland 20771

Prepared by:
Martin Marietta Corporation
Astro Space
P.O. Box 800
Princeton, New Jersey 08543–0800

DCC080593

(This page intentionally left blank.)

REVISION LOG

This log identifies those portions of this document which have been revised since the original issue. Revised portions of each page, for the current revision only, are identified by marginal striping.

Revision	Paragraph Number(s) Affected	Rev. Date	Approval
Initial Issue		05 Aug. 1993	CM/GSR

(This page intentionally left blank.)

TABLE OF CONTENTS

SECTION / PARAGRAPH	TITLE	PAGE
1	SCOPE	1
1.1	Identification	1
2	APPLICABLE DOCUMENTS	3
2.1	Government Documents	3
2.1.1	NASA Documents	3
2.1.2	Military Documents	3
2.1.3	Other Government Documents	3
2.2	Non–Government Documents	3
2.2.1	Martin Marietta Astro Space Documents	3
2.2.2	Subcontractor Documents	5
2.2.3	Other Non–government Documents	5
3	REQUIREMENTS	7
3.1	Propulsion Subsystem Definition	7
3.1.1	Item Diagrams	7
3.1.2	Interface Definition	10
3.1.2.1	Functional Interfaces	10
3.1.2.2	Physical Interfaces	10
3.1.3	Major Component List	14
3.2	Characteristics	14
3.2.1	Performance	14
3.2.1.1	Maximum Expected Operation Pressure	14
3.2.1.2	Maximum Propellant Load	14
3.2.1.3	Propellant Management	14
3.2.1.4	Propellant Gauging	14
3.2.1.5	Propellant Residuals	14
3.2.1.6	Propellant Loading	15
3.2.1.7	Propellant Detanking	15
3.2.1.8	REA Performance	15

TABLE OF CONTENTS (Continued)

SECTION / PARAGRAPH	TITLE	PAGE
3.2.1.9	Propulsion Subsystem Leakage	16
3.2.1.10	Propulsion Thermal Control Requirements	17
3.2.1.11	Wetted Propulsion Subsystem Pressure Drop Requirements	17
3.2.1.12	Wetted Propulsion Subsystem Fluid Compatibility	17
3.2.1.13	Acceleration	17
3.2.1.14	Command and Telemetry Support	17
3.2.1.15	Center of Gravity Movement Contribution	18
3.2.2	Operational Modes	18
3.2.2.1	Unloaded Mode	18
3.2.2.2	Loaded Mode	18
3.2.2.3	Transition Between Unloaded and Loaded Mode	19
3.2.3	Physical Characteristics	19
3.2.3.1	Mass	19
3.2.3.2	Durability	19
3.2.3.3	Layout and Dimensions	19
3.2.3.4	Maintainability Impact on Design	20
3.2.3.5	Handling Features	20
3.2.4	Power Characteristics	20
3.2.5	Power Usage	20
3.2.6	Reliability	20
3.2.6.1	Storage Restrictions	21
3.2.6.2	Vulnerability Factors	21
3.2.6.3	Failure Tolerance	21
3.2.6.4	Failure Propagation Restrictions	21
3.2.7	Environmental Conditions	21
3.2.7.1	Storage, Integration and Test	22
3.2.7.2	Shipment	22
3.2.7.3	Launch	22
3.2.7.4	On–orbit	22
3.2.7.5	Electromagnetic Radiation	22

TABLE OF CONTENTS (Continued)

SECTION / PARAGRAPH	TITLE	PAGE
3.3	Design and Construction	23
3.3.1	Material, Processes, Parts, and Finishes	23
3.3.1.1	Cleanliness	23
3.3.1.2	Contamination	23
3.3.1.3	Materials	23
3.3.2	Nameplates and Product Marking	23
3.3.2.1	Non–Flight Equipment Marking	23
3.3.2.2	Identifiability of Wires, Cable, and Fluid Lines	24
3.3.2.3	Labeling of Test and Adjustment Points	24
3.3.2.4	Design/Marking for Orientation	24
3.3.3	Workmanship	24
3.3.4	Interchangeability	24
3.3.5	Safety	24
3.3.5.1	General	24
3.3.5.2	Automatic Hazard Detection and Safing	24
3.3.5.3	Safety Interlock Mechanisms/Techniques	25
3.3.5.4	Power Exclusion Rules	25
3.3.5.5	Liquids and Gasses	25
3.3.5.6	Pressurized Vessels	25
3.4	Documentation	25
3.4.1	Specifications	25
3.4.2	Drawings	25
3.4.3	Technical Manuals	25
3.4.4	Test plans	25
3.4.5	Procedures	25
3.4.6	Installation Instructions	26
3.4.7	Software Documentation	26
3.4.8	Operational Requirements Documentation	26
3.5	Logistics	26
3.5.1	Maintenance	26

TABLE OF CONTENTS (Continued)

SECTION / PARAGRAPH	TITLE	PAGE
3.6	Precedence	26
3.6.1	Precedence of Design Criteria	26
3.6.2	Documentation Precedence	26
3.7	Major Component Characteristics	27
3.7.1	Allocations	27
3.7.2	Flight Hardware Component Characteristics	28
3.7.2.1	Propellant Tank Characteristics	28
3.7.2.2	Fill and Drain Valve Characteristics	29
3.7.2.3	Latching Valve Characteristics	30
3.7.2.4	Propellant Filter Characteristics	30
3.7.2.5	Pressure Transducer Characteristics	31
3.7.2.6	Manifold Tubing Performance	31
3.7.2.7	5 lbf REA Characteristics	32
3.7.2.8	1 lbf REA Characteristics	33
3.7.2.9	PMEA Characteristics	34
3.7.2.10	EPC Characteristics	35
3.7.3	Flight Software Component Characteristics	35
3.8	Personnel and Training	35
4	QUALITY ASSURANCE PROVISIONS	37
4.1	Propulsion Subsystem Verification	37
4.1.1	Verification Phases	37
4.1.2	Verification Methods	37
4.1.3	Responsibility for Verification	37
4.1.4	Verification Conditions	37
4.2	Testing	37
4.2.1	Reliability testing	37
4.2.2	Engineering evaluation and test requirements	38
4.2.2.1	Test Flows	38
4.2.2.2	Performance Tests	38

TABLE OF CONTENTS (Continued)

SECTION / PARAGRAPH	TITLE	PAGE
4.2.2.3	Verification Tests	38
4.2.3	Acceptance Testing	39
4.2.4	Qualification Testing	39
4.2.5	Installation Testing and Checkout	39
4.3	Special Propulsion Subsystem Verifications	39
4.4	Test Equipment	39
4.4.1	Test Equipment Safety Features	39
4.4.2	Test Equipment Verification	39
4.4.3	Test Equipment Calibration	40
4.5	Verification Documentation	40
5	PREPARATION FOR DELIVERY	41
6	NOTES	43
6.1	Definitions	43
6.2	Acronyms and Abbreviations	43
6.3	Exceptions to the GIS and GIIS	44
6.4	Requirements Traceability Matrix	44
	APPENDIX I	
10	PROPULSION MODULE COMMAND LIST	45
	APPENDIX II	
20	TELEMETRY INPUTS	47

LIST OF FIGURES

FIGURE	TITLE	PAGE
1	Functional Flow Diagram	8
2	Physical Block Diagram	9
3	Attitude Control Thruster Stayout Zones	12

LIST OF TABLES

TABLE	TITLE	PAGE
I	Functional Interfaces	11
II	Major Components	14
III	Subsystem Operational Modes	18
IV	Power Resource Allocation	20
V	Propulsion Subsystem Allocations	28
VI	Operation of PMEA	35

TBS LOG

ITEM	SECTION	PAGE	SUBJECT	RESP.	DUE
TBS–1	3.7.2.4.3	31	Filter capacity	Propulsion	10/1/93

1 SCOPE

1.1 Identification

This specification establishes the performance, design, development, and test requirements for the Propulsion Subsystem. These requirements are derived from the Contract End Item Specification, PS20005396, and the documents it cites.

(This page intentionally left blank.)

2 APPLICABLE DOCUMENTS

The following documents of the exact issue shown, form a part of this specification to the extent specified herein. In the event of conflict between the documents referenced below and the contents of this specification, the contents of this specification shall take precedence, except as defined in Section 3.6 herein.

2.1 Government Documents

2.1.1 NASA Documents

2.1.2 Military Documents

MIL–P–26536C Amn 2 01 February 1982	Propellant, Hydrazine, High Purity Grade
MIL–STD–490A 04 June 1985	Specification Practices
MIL–STD–1522A	Standard General Requirements for Safe Design and Operation of Pressurized Missile and Space Systems
MIL–STD–889A 07 July 1976 Notice 1 21 November 1979	Dissimilar Metals
MIL–HDBK–5E 01 June 1987	Metallic Materials and Elements for Aerospace Vehicle Structures.
WSMCR–127–1	Western Space and Missile Center Range Safety Regulations, December 1989
MIL–P–27407A 28 November 1978	Propellant, Pressurizing Agent Helium, Grade B
MIL–P–27401B	Propellant, Nitrogen, Pressurizing Agent
TT–I–735A	Water, Deionized, High Purity

2.1.3 Other Government Documents

None

2.2 Non–Government Documents

2.2.1 Martin Marietta Astro Space Documents

IS20008501	General Interface Specification for the Earth Observing System (ICD–101)

PS20005404	Verification Specification for the Earth Observing System (VRD–110)
20008792	Welded Assembly Propulsion Module
20008793	Propulsion Module Structure/Welded Assembly
20008650	EOS Spacecraft Program Approved Parts List (PAPL) (PA–325)
IS20008503	Launch Vehicle Interface Control Drawing
PN20005869	Electromagnetic Compatibility (EMC) Control Plan (SEP–106)
20005397	Product Assurance Implementation Plan (PA–100)
20008536	EOS–AM Spacecraft Specification Tree
20008652	Critical Items List (PA–510)
PS20038078	Performance Specification 1.0 lbf REA
PS3268395, Rev. D	Performance Specification, 5.0 lbf REA
PS20036563	Performance Specification, Propellant Filter
PS20039929	Performance Specification, Latching Valve
PS20042098	Performance Specification, Pressurant and Propellant Fill and Drain Valve
PS20001402	Performance Specification, Propellant Tank
PS2308188	Performance Specification Pressure Transducer
2591847	1.0 lbf REA ICD
3268395, Rev. C	5.0 lbf REA ICD
20039929	Latching Valve ICD
20042098	Fill and Drain Valve ICD
20001402	Propellant Tank ICD
20044159	Propellant Filter ICD
2280784	Cleanliness Requirements
IS20008503	Launch Vehicle Interface Requirements Document

PS20008617	Propulsion Module Electronics Assembly (SP–701)
PS20008618	Propulsion Module Critical Item Development Specification for EOS–AM Spacecraft
20043126G1	Propulsion Module Assembly Drawing
20008655	Ground System Requirements Database
Source:	Martin Marietta Astro Space P. O. Box 800 Princeton, NJ 08543–0800

2.2.2 Subcontractor Documents

None

2.2.3 Other Non–government Documents

None

(This page intentionally left blank.)

3 REQUIREMENTS

The Propulsion Subsystem will meet all performance requirements specified herein.

3.1 Propulsion Subsystem Definition

The Propulsion subsystem will, under control of the C&DH and GN&CS equipment, support the Spacecraft during all mission phases. The Propulsion subsystem will provide impulse for the accomplishment of orbit acquisition maneuvers, and orbit maintenance maneuvers and will provide impulsive torques for on–orbit three–axis attitude control, three–axis inertial attitude slews, three–axis Earth and sun acquisitions, and reaction wheel unloading. The Propulsion Subsystem consists of the propulsion assembly and electrical assembly.

The electrical assembly will handle all command and telemetry between the Spacecraft and the Propulsion Subsystem. It will also contain all of the valve drivers, secondary power conversion equipment, and pressure transducer interfaces for the propulsion subsystem. The electrical assembly will provide 28 Vdc power to all propulsion subsystem components as required.

The Propulsion Subsystem will be of an all monopropellant design and will produce thrust through the catalytic decomposition of hydrazine. The Propulsion Subsystem will consist of one 42x34 inch propellant tank supplying two groups of two 5 lbf REAs and six 1.0 lbf REAs. A stainless steel and titanium all welded manifold network will include latching valves, fill and drain valves, propellant filters, pressure and temperature instrumentation and thermal control equipment.

The Propulsion Subsystem will operate in a 4.44:1 pressure blowdown mode. Thrust will be generated by four 5.0 lbf REAs and twelve 1.0 lbf REAs. The REAs will be mounted on the –X side of the rear bulkhead in accordance with the PM structure and Welded Assembly Drawing 20008793. The REAs are manifolded into two equal half systems each of which will be capable of accomplishing all attitude control maneuvers. The REAs will be operable either autonomously via the on–board GN&CS controllers, or by direct ground command for individual control of any REA.

The propellant tank will contain a propellant management device (PMD) to preclude the helium gas pressurant from entering the REA supply line manifolding during all required on–orbit operations. Latching valves will permit half system isolation. Telemetry will be provided to indicate propellant–feed pressures and temperatures, valve temperatures, and latching valve position indication. Heaters, temperature sensors, thermal coatings, and insulation blankets, will be utilized to maintain propellant and REA temperatures within required limits.

The wetted Propulsion Subsystem will be capable of being vacuum loaded with 760 lbm of hydrazine propellant, transported to the launch vehicle while fully loaded, and being off–loaded while in launch configuration.

3.1.1 Item Diagrams

The functional flow and first–level physical breakdown of the subsystem are shown in Figures 1 and 2.

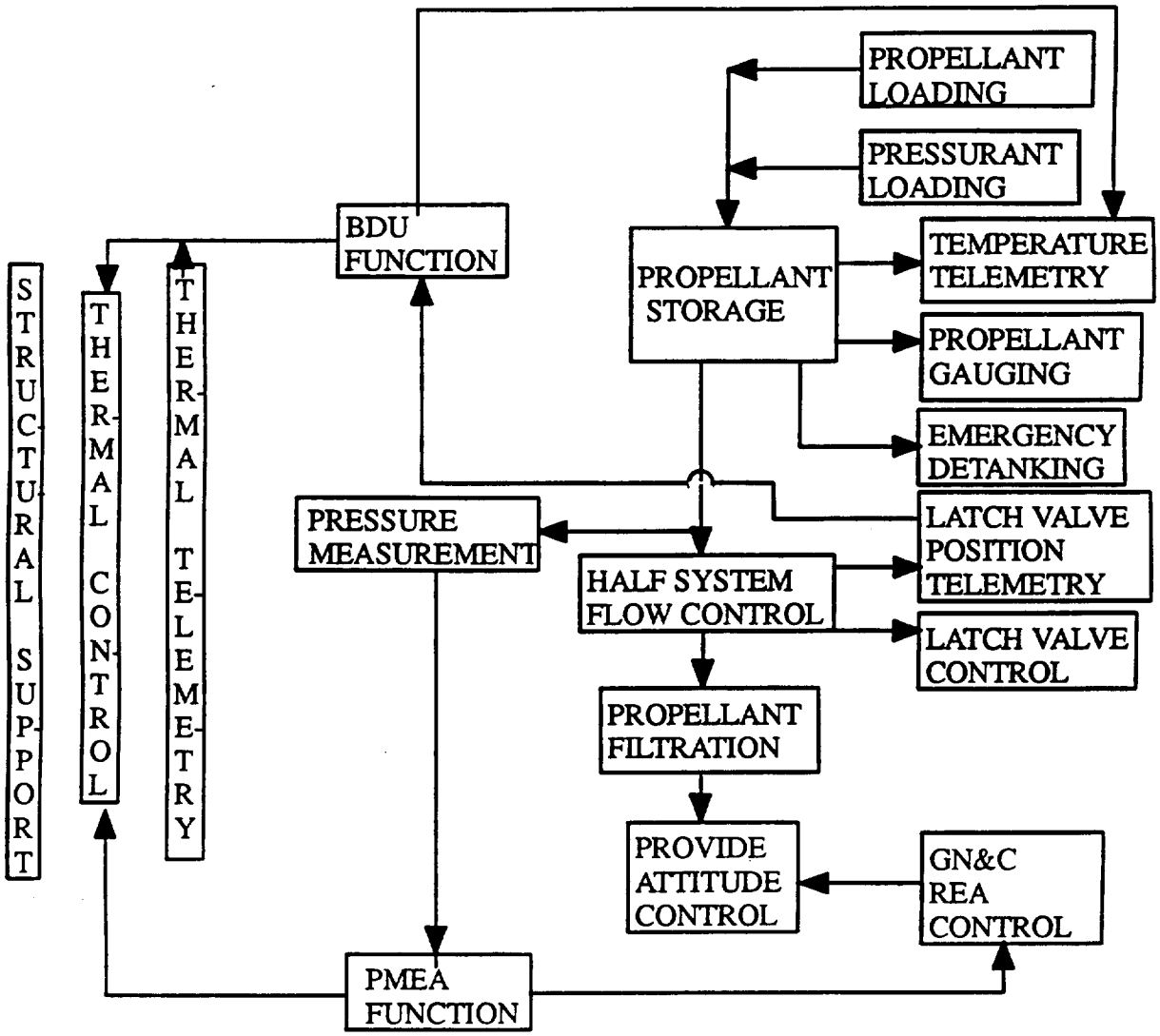

Figure 1. Functional Flow Diagram

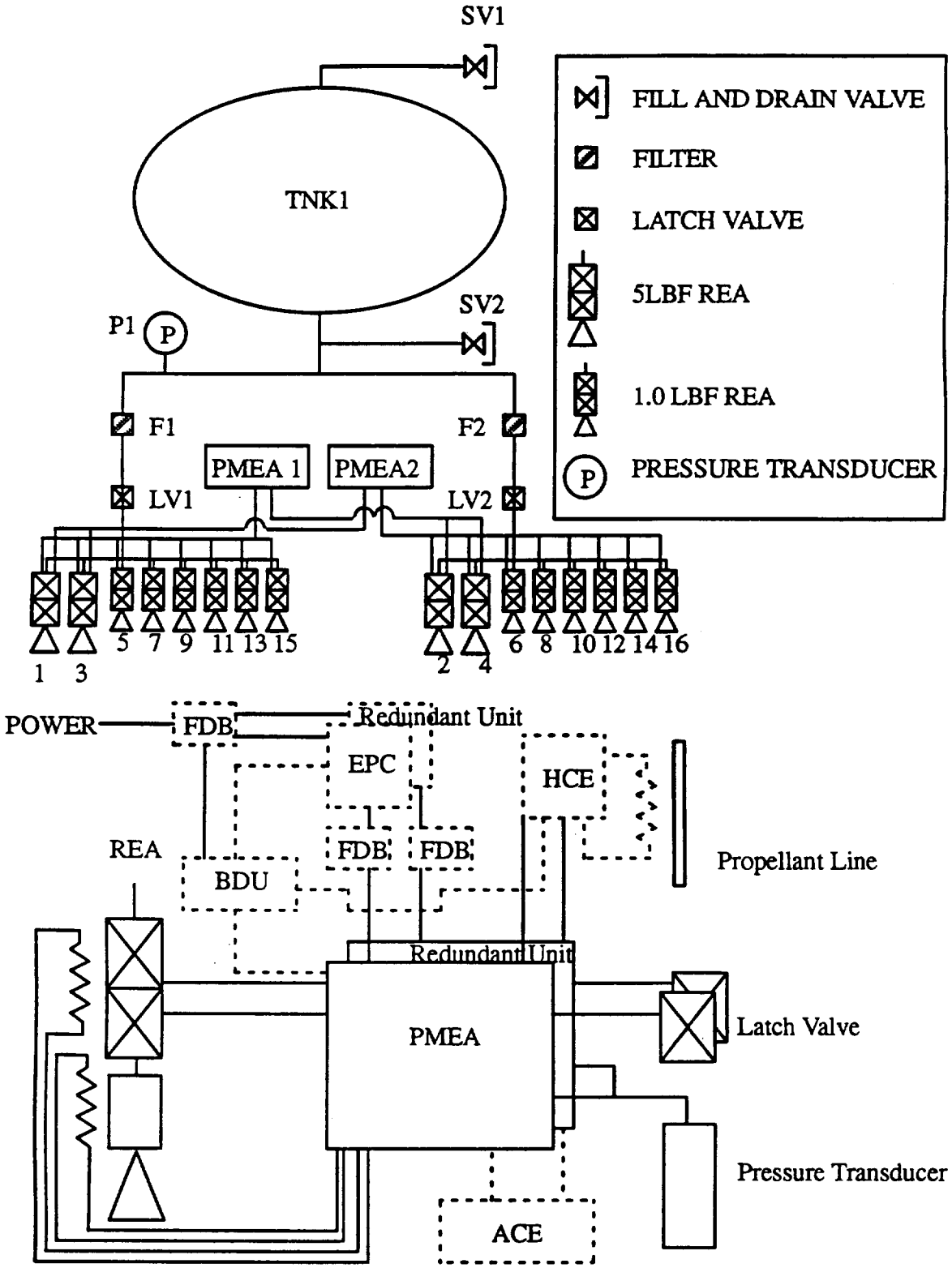

Figure 2. Physical Block Diagram

3.1.2 Interface Definition

The mechanical and electrical interfaces that must exist between the major components and between this item and other items of the Spacecraft are defined on the RCS Welded Assembly, 20008792; PM Structure/Welded Assembly, 20008793; Propulsion Module Critical Item Development Specification, PS20008618 Sections 3.1.2.3 and 3.1.2.2, Latching Valve, ICD20039929; Propellant Filter, ICD20044159; 5.0 lbf REA, ICD3268395; 1.0 lbf REA, ICD20038078; Low Pressure Transducer, ICD2308188; Propellant Tank, ICD20001402; Low Pressure Fill and Drain Valve, ICD20042098, PMEA ICD 20008619, BDU ICD 20008568.

[1] The Propulsion Subsystem design shall comply with the requirements of the Launch Vehicle Interface Requirements Document (IS20008503).

3.1.2.1 Functional Interfaces

The functional interfaces for the Propulsion Subsystem are shown in Table I.

3.1.2.1.1 Software Interfaces

Not Applicable.

3.1.2.1.2 Data Interfaces

3.1.2.1.2.1 Command Inputs

The format, function and timing of commands for all propulsion subsystem components are listed in Appendix I.

3.1.2.1.2.2 Telemetry Outputs

The type function and timing of telemetry words for all PM components are listed in Appendix II.

3.1.2.2 Physical Interfaces

3.1.2.2.1 Electrical Interfaces

[1] The Propulsion Subsystem shall comply with the requirements of the GIS, IS20008501, Section 3, regarding Power, Grounds, Standard Signal Interfaces, Test Points, and Connectors and Pin Allocations.

[2] All electrical connectors shall be selected, sized, keyed, and/or marked such that incorrect attachment to the mating connector is prevented. All connectors shall attach such that the connectors cannot be inadvertently unlocked during ground operations.

3.1.2.2.2 Mechanical Interfaces

[1] The Propulsion Subsystem shall comply with the requirements of the GIS, IS20008501, Section 4, regarding Coordinate Systems, Physical Characteristics, Design and Construction, Mounting, Alignment, Dynamic Characteristics, Structural Criteria, and Tooling. The Propulsion Subsystem coordinates shall be defined in the Propulsion Module Assembly Drawing, 20043126G1.

Table I. Functional Interfaces (Internal and External)

Input	Source	Activity	H/W or S/W *(Designate Which)*	Output	Destination	Mode
Thruster Commands	PMEA via BDU	Provide attitude control and orbital adjust maneuvers	H/W	Thrust from selected engines	Thruster Coils	All, except safe/hold
Thruster Commands	PMEA via ACE	Produce attitude control maneuvers	H/W	Thrust from selected ACS engines	Thruster Coils	Safe/Hold
Latch Valve Controls	PMEA	Isolate Half-System thrusters	H/W	Pulsed 28V Power	Latch Valve Coils	All
Latch valve position telemetry	Latch Valves	Monitor open or closed status of latching valves	H/W	Passive Bilevel Telemetry Signal	BDU	All
Propellant Storage	Propellant tank	Store propellant required for attitude control maneuvers	H/W			
Propellant Loading	Ground equipment	Propellant is loaded during ground servicing	H/W	Propellant to tanks	Propellant tanks	Ground Servicing
Pressurant Loading	Ground Equipment	Subsystem is pressurized to MEOP pressure	H/W	Pressurant gas	Propellant tanks	Ground Servicing
Emergency Detanking	Propellant tanks	Emergency may require propellant be remonved from tanks	H/W	Propellant	Ground support Equip	Ground servicing
Pressure Measurement	Pressure Transducer	Monitors tank gas pressure	H/W	Active analog telemetry signal	BDu	All
Thermal Control	PMEA and HCE	Control Propulsion Subsystem temperature	H/W	28V Heater power	Heaters	All
LV separation signal	Launch vehicle	Prevents thruster firing prior to separation	H/W	Separation signal	PMEA	Launch
Component Temp	Thermistors	Temperature status of components	H/W	Passive Analog Telemetry	BDU	All
120V S/C Power	BDU	120V spacecraft power to Propulsion Subsystem	H/W	120V	BDU and EPC's	All
28V Power	EPC	28V power to Propulsion Subsystem Components	H/W	28V	Prop Components	All

PS20008617
05 August 1993

[2] The Propulsion Subsystem shall incorporate interfaces for external stimuli or simulators where necessary for ground testing as defined in Section 4 herein.

[3] The mounting brackets for the REA shall incorporate provisions for alignment so that individual REAs can be aligned such that the thrust vectors lie within a cone of .15 degree half–angle to the directions specified on the Propulsion Module Assembly Drawing 20043126G1 and Welded Assembly Drawing, 20008793. Also, all thrusters shall have provisions for their positions to be varied by 1 inch to accommodate changes in the Spacecraft CG position.

[4] The appendages that are deployed will not interfere in the normal operation of REAs and will not be positioned so as to be damaged by the REA plumes.

[5] The location of attitude control thrusters shall conform to the stayout zones identified in Section 3.1.2.3 of PS20008618 Propulsion Module Critical Item Development Specification for EOS–AM Spacecraft.

[6] Propulsion Subsystem fill and drain valves will be readily accessible.

[7] Items requiring frequent access during I&T or other prelaunch operations shall be accessible during I&T.

3.1.2.2.3 Thermal Interfaces

The Propulsion Subsystem shall comply with the requirements of the GIS, IS20008501, Section 5, regarding Thermal interfaces, Environmental Flux Parameters, and Thermal Control Hardware. The thermal control assembly will be enabled prior to launch and will remain enabled during all subsequent mission phases. The thermal control assembly design will include the protection of the Propulsion components from heat generated by the REAs, and the temperature maintenance of all Propulsion equipment, including but not limited to: tanks, lines, valves, and the catalyst beds of the monopropellant REAs. The thermal interface will be controlled through the PMEA. Heaters, multilayer insulation blankets, and radiators will be used to meet the thermal control requirements.

3.1.2.2.4 PMEA Interfaces

3.1.2.2.4.1 BDU Interfaces

3.1.2.2.4.1.1 Thruster Commands and Telemetry

During each 1024 millisecond interval, the BDU shall transmit unique fire time serial command messages for each thruster of the on–line set. The BDU will also provide a discrete Thruster Control Execute (TCE) pulse during each 1024 ms interval on a standard digital interface as specified by the GIS, PS20008501. If all commands are validated by the PMEA for that interval then actuation of all selected thrusters occurs following receipt of the TCE pulse. PMEA thruster telemetry shall include on/off status for each thruster and command integrity status. Command and telemetry interfaces shall be as specified in the General Interface Specification (GIS), IS20008501.

3.1.2.2.4.1.2 Relay Drive Commands and Telemetry

A second BDU serial port is dedicated for PMEA relay drive commands and telemetry. Relay drive commands will configure relays within the PMEA. The status of each PMEA relay shall be serially telemetered to the BDU. Command and telemetry interfaces shall be as specified in the General Interface Specification (GIS), IS20008501.

3.1.2.2.4.2 ACE Interfaces

The ACE shall transmit unique fire time command messages for each thruster of the on–line set on a standard serial interface as specified in the GIS, IS20008501. Thruster actuation will occur following receipt of a fire command with the last word indicator set. The ACE will also provide a logic level signal so that the PMEA will recognize the passage of the Spacecraft into Safe Hold mode and accept fire command messages from the ACE only. The Safe Mode signal will be a standard digital interface as specified by the GIS, IS20008501.

3.1.2.2.4.3 Separation Signal

The PMEA shall receive redundant feeds from separate pins in the Safe/Arm Plug. With the Safe Plug installed, the PMEA shall be unable to switch 28 V power to any thruster coil. With the Arm Plug installed, the PMEA shall respond to commands to switch 28 V power to the thruster coils

3.1.2.2.4.4 28 V Power Interface

The PMEA shall receive multiple 28 V power and return feeds from the FDB. Power shall be switched on/off to PROPS components upon command. The 28 V interfaces include thruster coils, catalyst bed heaters, pressure transducers, Heater Control Electronics (HCEs), heaters, and latch valve coils (pulsed 28 V). Secondary power interfaces shall comply with the General Interface Specification (GIS), IS20008501.

3.1.2.2.5 Ground Servicing Equipment Interfaces

Propellant and pressurant will be loaded and drained from the system, using a Propellant and Pressurant Service Unit (PPSU) cart. Propulsion Subsystem temperature and pressure monitoring capability will be provided and monitored throughout the ground processing period. Fluids entering the wetted Propulsion Subsystem will be filtered to 2 microns absolute and connections between the PPSU and the Propulsion Subsystem shall be made at the fill and drain valves. Gasses entering the Propulsion Subsystem will be filtered to 5 microns. All fill and drain valve cycle history will be logged during ground operations and kept below 100 cycles per valve. The Propulsion Subsystem shall be designed to use existing ground equipment to perform maintenance functions, wherever practical, rather than requiring the design of new equipment. The Propulsion Subsystem shall support prelaunch integration and checkout of the Propulsion Subsystem by incorporating interfaces for external stimuli or simulators, where appropriate, and by performing status checks and executing sample command loads. The Propulsion Subsystem interfaces shall be defined in 3.1.2 and 3.1.2.2.2.

3.1.3 Major Component List

The major components of the Propulsion Subsystem shall be as listed in Table II.

Table II. Major Components

S/S Component	no.	Major Function	GFP/GLP
Propellant Tank	1	Propellant storage	N
Propellant Filter	2	Filter propellant	N
5 lbf REA	4	Orbit raising maneuver	N
1 lbf REA	12	Attitude control	N
Fill and Drain Valve	2	Load and Unload Propellant	N
Pressure Transducer	1	Gauge tank pressure	N
PMEA	2	Configuration/Fire Control	N

3.2 Characteristics

3.2.1 Performance

3.2.1.1 Maximum Expected Operation Pressure

The maximum expected operating pressure of the tank shall be 400 psia.

3.2.1.2 Maximum Propellant Load

The maximum hydrazine propellant load that can be contained within the propulsion subsystem is 760 lbm.

3.2.1.3 Propellant Management

The propellant tank shall contain a Propellant Management Device (PMD) designed to provide gas-free propellant to all REAs for all anticipated mission scenarios including maximum deceleration and maximum lateral acceleration.

3.2.1.4 Propellant Gauging

The Propulsion module shall support the determination of remaining propellant quantities with an accuracy of ±3% of tank capacity using a thermal mass gauging system.

3.2.1.5 Propellant Residuals

The Propulsion Module shall be designed for a maximum residual propellant capacity of 1.2% of the tank capacity in the lines, valves, and tank.

3.2.1.6 Propellant Loading

Propellant and pressurant will be capable of being loaded to the Propulsion Module using Mechanical Aerospace Ground Equipment (MAGE) carts at the launch site. The wetted Propulsion Subsystem will be capable of being vacuum loaded to an accuracy of 0.2% of the total load. The propulsion subsystem shall be capable of being loaded in the Spacecraft horizontal with the +Z or –Z axis in the vertical orientation and vertical positions.

3.2.1.7 Propellant Detanking

It shall be possible to offload propellant and pressurant while the Spacecraft is attached to the launch vehicle and while the vehicle payload faring is in place. Additionally, it shall be possible to flush, purge, and decontaminate the Propulsion Module at the WTR to ensure a non–hazardous condition of the Propulsion Module for shipping. Following any off–load of propellant or propellant simulants, the wetted Propulsion Subsystem will be capable of being decontaminated and dried within seven days.

3.2.1.8 REA Performance

3.2.1.8.1 General

The REAs shall be capable of unrestricted, continuous or pulse–mode operation initiated either on–board or by ground command throughout all phases of the mission. It shall be possible to restart and operate any REA regardless of when or for how long that REA was last fired.

3.2.1.8.2 REA Control

The Propulsion Subsystem shall provide means for selecting/deselecting each individual REA in response to commands received via the C&DHS or, if in Safe Hold mode, the ACE. When an REA is disabled, commands to fire that REA from any source shall be ignored by the Propulsion Subsystem.

3.2.1.8.3 REA Positioning

The position and orientation of the REAs shall be such that optimum performance is attained, while disturbances due to plume impingement, Spacecraft center of gravity shifts, and thrust misalignments are minimized.

3.2.1.8.4 REA Performance Predictions

The flight performance requirements of the propulsion system such as thrust, minimum impulse bit, specific impulse, total impulse, cumulative impulse, and pulse centroid, shall be predictable and consistent with the assigned propellant budget and to meet the mission requirements. Prediction requirements shall be evaluated assuming a single half–system failure and helium pressurant saturated propellants.

3.2.1.8.5 REA Specific Impulse Requirements

The minimum specific impulse for the different REAs shall be:

5.0 lbf REA	215 sec
1.0 lbf REA	215 sec*

* – in pulse mode with 50 ms pulse duration

3.2.1.8.6 REA Total Impulse Requirements

The total impulse provided by the Propulsion Subsystem shall be:

5.0 lbf REA	>313000 lbf–sec
1.0 lbf REA	>20000 lbf–sec

3.2.1.8.7 REA Firing Duration Requirements

The minimum maneuver duration shall be consistent with the minimum impulse requirement. The longest out–of–plane delta–V maneuver shall not exceed 720 seconds for a 43.6 ft/sec, or 21.8 ft/sec for a half–system failure case, beginning–of–life (BOL) maneuver. The longest orbit adjust delta–V maneuver shall not exceed 1800 seconds for a 74 ft/sec change, or 37 ft/sec change for a half–system failure case, during boost.

3.2.1.8.8 REA Pulse Width Requirements

The minimum pulse width of the REAs shall be less than or equal to 0.016 seconds.

3.2.1.8.9 REA Pulse Count Requirements

The total pulse counts required for the Propulsion Subsystem REAs shall be:

5 lbf REAs	>100
1 lbf REAs	>30000

The REAs shall be qualified for a pulse count 1.25 times the given values.

3.2.1.8.10 REA Throughput Requirements

The summation of the allocated qualified throughput for each REAs shall be 1.25 times the propellant load for the primary mode and 1.19 for the half system failure mode.

3.2.1.9 Propulsion Subsystem Leakage

The Propulsion Subsystem total leakage shall not exceed 50 scc/hr of gaseous helium when it is pressurized internally to the Maximum Operating Pressure (MOP). Exclusive of REA seat internal leakage, the Propulsion Subsystem leakage shall not exceed 12 scc/hr of gaseous helium. Leakage past an individual fill and drain valve or REA valve shall not exceed 5 scc/hr of gaseous helium.

3.2.1.10 Propulsion Thermal Control Requirements

Propulsion Subsystem wetted component temperatures will remain above the freezing point of hydrazine propellant, 12°C and below +40°C. This will be accomplished by the use of propellant manifold and REA valve and tank heaters and by the use of thermal blankets. Catalyst bed heaters shall be incorporated on each REA to assure that REA performance and life requirements are met. Catalyst bed heaters shall be turned on 30 minutes prior to thruster firing. All propellant lines shall be thermally isolated from the Spacecraft structure.

3.2.1.11 Wetted Propulsion Subsystem Pressure Drop Requirements

The wetted Propulsion Subsystem shall be designed to minimize the pressure drop in any flow path from the propellant storage tanks to the REAs and to minimize the variation in pressure drop between parallel flow paths. The pressure drops at the tank outlet shall not exceed 5 psid.

3.2.1.12 Wetted Propulsion Subsystem Fluid Compatibility

The wetted Propulsion Subsystem shall be compatible with the following fluids:

Hydrazine per MIL–P–26536C
Helium per MIL–P–27407
Nitrogen per MIL–P–27401B

3.2.1.13 Acceleration

Maximum induced linear acceleration shall be less than 0.01 g's for a Spacecraft dry mass equal to or greater than 9000 lbs.

3.2.1.13.1 Control Requirements

Control requirements shall be specified in Section 3.2.1.1.1 of the Propulsion Module Critical Item Development Specification, PS20008618.

3.2.1.14 Command and Telemetry Support

3.2.1.14.1 Telemetry

The Propulsion Subsystem shall incorporate temperature sensors, pressure transducers, and isolation–valve status/position indicators as specified in Appendix II. PMEA telemetry shall include thruster fire status and relay status as defined in Section 3.1.2.2.4 of this specification.

3.2.1.14.2 Commandability

Commands shall be provided to: enable/disable all Propulsion Subsystem electronic boxes; enable/disable arm/disarm and fire all REAs; to open/close all isolation valves; to turn on/off the pressure transducer; to enable/disable all tank, propellant line, and REA heaters; override heater

commands; open/close all REA valves as specified in Appendix I. Propulsion Subsystem REA firings shall be commandable such that any subset of REA may be selected for firing. The pulse duration for each selected REA shall be individually commandable over the range of 16 to 1024 m sec with a granularity of 8 msec. REA firings shall be controlled with a duration accuracy of 0.5 msec and a duration repeatability of 0.25 msec.

There shall be no commands required to transition the Propulsion Subsystem from one mode to another.

All commands shall come from each side of the redundant command module.

All commands are listed in PS20008618, Propulsion Module Performance Specification.

Propulsion Subsystem and components shall be commandable to known states regardless of earlier states and commands which have different functionality depending on current state (e.g., "toggle" commands) shall not be permitted. Propulsion subsystem shall accept and execute commands to override or inhibit the execution of automatic functions which may interfere with Spacecraft operations or jeopardize the health of the Spacecraft. No single command to the Propulsion Subsystem shall place the Spacecraft into a configuration from which it cannot recover. The Propulsion Subsystem shall execute real–time commands within one second of receipt via the command links.

3.2.1.15 Center of Gravity Movement Contribution

The Propulsion Subsystem propellant tank shall constrain the movement of the propellant center of mass to 3.26 inches in the axial (–X) direction and 3.78 inches in the lateral (Y–Z plane) direction for a full (760 lbm) propellant load.

3.2.2 Operational Modes

The subsystem operational modes are shown in Table III.

Table III. Subsystem Operational Modes

	SPACECRAFT MODE					
SUBSYSTEM MODE	Ground Test	Stand–by	Science	Delta–V	Survival	Safe
Unloaded Mode	x					
Loaded Mode		x	x	x	x	x

3.2.2.1 Unloaded Mode

In this mode the propellant tank contains no propellant and is pressurized to a blanket pressure of 80 psia or to 360 psia with gaseous helium. All latching valves will be in the open position except during acceptance testing.

3.2.2.2 Loaded Mode

This mode occurs following propellant loading. Initially, 760 lbm (maximum) of propellant will be contained within the tank decreasing to 7.6 lbm remaining at end of life. The propellant tank will initially be pressurized to 360 psia and this pressure will decrease throughout the Spacecraft life to

90 psia. All latching valves will remain open except for launch and in case of REA valve leakage. All propulsion subsystem components are wetted with hydrazine propellant except for the pressurant side of the propellant tank and the associated line and fill and drain valve which are pressurized with gaseous nitrogen. The propellant tank does not have a safe mode. The propulsion assembly will be activated shortly after separation and shall remain operational during all following phases. The propulsion assembly design shall be compatible with the launch vehicle for elliptical orbit insertion and will be functionally capable of reconfiguration to support all Spacecraft functions. The propulsion assembly shall be capable of providing, without restriction, the velocity increments and control torques required during all phases of the mission.

3.2.2.3 Transition Between Unloaded and Loaded Mode

Transition between the loaded and unloaded mode occurs at the launch site loading operation. In this operation 760 lbm of hydrazine propellant will be loaded into the propellant side of an evacuated propellant tank. Propellant will wet the entire propulsion subsystem except for electronic boxes, harness, and the pressurant side of the propellant tank and associated lines and fill and drain valve. This pressurant side of the propulsion subsystem will be pressurized to 360 psia with gaseous helium.

3.2.3 Physical Characteristics

3.2.3.1 Mass

The dry mass of the Propulsion Subsystem shall not exceed 130.0 lbs. The center–of–mass, products of inertia, and mass estimate accuracies shall be as defined in Section 4 of the GIS, IS20008501.

3.2.3.2 Durability

[1] The Propulsion Subsystem shall be made up only of materials and components capable of withstanding the environmental conditions specified in Section 3.2.7 without evidence of damage as defined below.

[2] The Propulsion Subsystem shall also be capable of withstanding, without evidence of physical damage (as defined below), any wear due to the functioning of the system.

[3] Damage shall be considered to be any change in the Propulsion Subsystem or components which may degrade subsystem performance to levels below those specified herein.

[4] The Propulsion Subsystem shall be capable of meeting all operational requirements as specified herein, in the environments specified in 3.2.7.3 and 3.2.7.4, for the duration of five years on orbit.

3.2.3.3 Layout and Dimensions

[1] The Propulsion Subsystem layout and

[2] maximum component dimensions shall be in accordance with RCS Welded Assembly, 20008792; PM Structure/Welded Assembly, 20008793; Latching Valve, ICD20039929; Propellant Filter, ICD20044159; 5.0 lbf REA, ICD3268395; 1.0 lbf REA, ICD20038078; Low Pressure Transducer, ICD2308188; Propellant Tank, ICD20001402; Low Pressure Fill and Drain Valve, ICD 20042088.

3.2.3.4 Maintainability Impact on Design

[1] To the extent practical, the Propulsion Subsystem shall facilitate maintenance by being functionally, mechanically, and electrically independent from all other Spacecraft elements except as stated in Section 3.1.2.2 herein

[2] and by being modular to the extent that all components are identical but as some components are welded into the system they cannot be replaced when electrical boxes are on the Spacecraft.

[3] The Propulsion Subsystem shall be designed to use existing ground support equipment (GSE), wherever practical, rather than requiring the design of new equipment.

3.2.3.5 Handling Features

The Propulsion Subsystem and/or GSE designs shall include handling features which reduce the likelihood of damage to any flight equipment.

3.2.4 Power Characteristics

The Propulsion Subsystem shall operate per the performance requirements specified herein when supplied power as specified in Section 3 of the GIS, IS20008501. Power will be supplied to the Propulsion subsystem prior to, during and following launch.

3.2.5 Power Usage

The Propulsion Subsystem shall draw power only within the bounds indicated in Table IV.

Table IV. Power Resource Allocation

	Maximum Average (W)
Ground Test	31.0
Survival	25.0
Delta–V	166.0
Standby	25.0
Science	2.0
Safe	28.0

These powers are orbit maximum average, based on End of Life

3.2.6 Reliability

[1] The probability of mission success (P_s) for the Propulsion Subsystem shall be at least 0.99 for a five–year mission life. Mission success is defined as meeting all the performance criteria specified in Section 3.2.

[2] The Propulsion Subsystem reliability program shall comply with the requirements of the PAR, GSFC 420–05–02.

3.2.6.1 Storage Restrictions

No Propulsion Subsystem components shall require change out during the 5 year storage life of the Spacecraft.

3.2.6.2 Vulnerability Factors

The following steps shall be taken to reduce Propulsion Subsystem vulnerability to damage:

Vulnerability	Protective Measure
Propellant tank puncture	Cognizant I&T
REA damage	REA covers
Overpressurization	Relief valves on all ground servicing equipment
Misconnection of electrical devices	Connector labeling, orientation, and keying

3.2.6.3 Failure Tolerance

[1] The Propulsion Subsystem shall be tolerant of any single, credible, hard failure including a failure in the EAS harness servicing the Propulsion Subsystem.

[2] No failure shall induce any other failure.

[3] After any single Propulsion Subsystem failure, the Propulsion Subsystem shall continue to provide all services identified in paragraph 3.2.1 without any interruptions which may threaten the survival of any Spacecraft component or instrument.

[4] Failures which threaten Spacecraft survival shall be detectable.

3.2.6.4 Failure Propagation Restrictions

[1] No single failure shall cause loss of a redundant functional path for any critical function,

[2] nor shall any event causing the loss of any critical or non–critical functional path result in loss of the alternate or redundant path.

[3] The Propulsion Subsystem shall ensure that no instrument or component failures may propagate failures to other Spacecraft elements. This shall be accomplished by the use of redundant half systems each of which can perform the mission.

3.2.7 Environmental Conditions

[1] The Propulsion Subsystem components shall remain undamaged during

[2] and following exposure to the protoflight environmental test levels corresponding to the ambient environments defined in the GIS, IS20008501 Section 6.

[3] The Propulsion Subsystem and its components shall remain undamaged during

[4] and following exposure to the acceptance environmental test levels corresponding to the ambient environments defined in the GIS, IS20008501 Section 6.

[5] Test levels shall be as defined in the Verification Specification, PS20005404. Propellant tank vibration levels will be determined by a modal analysis.

[6] Damage shall be as defined in Section 3.2.3.2.

[7] Where practical, the Propulsion Subsystem shall not impose operational constraints due to natural environment conditions during checkout, launch, and on–orbit operations.

3.2.7.1 Storage, Integration and Test

The Propulsion Subsystem shall be capable of being held for testing or storage for the period defined in the GIS, IS20008501 Section 6, under the pre–launch conditions stated there for [1] thermal, [2] contamination, [3] humidity, and [4] electromagnetic interference (EMI), without suffering any damage as defined above.

3.2.7.2 Shipment

The Propulsion Subsystem shall comply with the following transportation environmental requirements as defined in the GIS, IS20008501 Section 6: [1] thermal, [2] contamination, [3] humidity, [4] EMI, [5] loads, and [6] shock. The Spacecraft is assumed to be horizontal for all flight transportation and either horizontal or vertical for all ground vehicle transportation.

3.2.7.3 Launch

The Propulsion Subsystem shall comply with the following launch environmental requirements as defined in the GIS, IS20008501 Section 6: [1] thermal, [2] contamination, [3] Radiated RF, [4] EMI, [5] loads, [6] shock, and [7] pressure [8] acoustic vibration, [9] lightning and [10] cosmic ray. The Propulsion Subsystem will meet all range safety requirements of the Western Test Range (WTR) given in WSMCR 127–1 without exception. Additionally, the Propulsion Subsystem will not require any type of launch waiver to meet WTR safety requirements.

3.2.7.4 On–orbit

The Propulsion Subsystem shall comply with the following on–orbit environmental requirements as defined in the GIS, IS20008501 Sections 5 and 6: [1] thermal, [2] contamination, [3] pressure, [4] EMI, [5] loads, [6] shock, [7] orbital debris, [8] micrometeoroids, [9] vibration, [10] charged particle, [11] atomic oxygen, [12] magnetic, and [13] electrostatic discharge.

3.2.7.5 Electromagnetic Radiation

[1] The Propulsion Subsystem shall be compatible with its specified operating environment and meet the requirements for the Spacecraft, as specified by the EMC Control Plan, PN20005869.

[2] The Propulsion Subsystem and its components shall comply with the ionizing radiation design requirements specified in the GIS, IS20008501, Section 6.

[3] Propulsion Subsystem hardware shall be immune to latch–up from single event upsets induced by cosmic rays. If this immunity is not possible, the Spacecraft hardware shall also be capable of withstanding single event upsets and transients induced by the singular or combined effects of cosmic rays, solar flares and geomagnetically trapped protons in the Spacecraft mission environment.

3.3 Design and Construction

3.3.1 Material, Processes, Parts, and Finishes

All materials, manufacturing processes, parts and finishes shall be selected in accordance with the corresponding requirements in Section 4 of the GIS, IS20008501 and those identified in the Program Approved Materials and Process List, MM 20008650.. Materials shall be selected on the basis of natural and induced environments compatibility, functional acceptability and suitability, extended life characteristics, technological maturity, manufacturability, inspectability, contamination characteristics, specific strength, mutual compatibility, availability, cost, and safety.

3.3.1.1 Cleanliness

All wetted Propulsion Subsystem surfaces in contact with the operating propellant, with the exception of those in the thrust chamber, shall meet the cleanliness requirements of 2280784 Class D; metal particles larger than 50 microns shall not be permitted. Component and system assembly and testing shall be performed in an environment with suitable preparations to insure the required level of cleanliness is maintained. The feed system shall be pressurized at all times following final assembly with a minimum of 15 psig blanket pressure to preclude entry of contaminants.

3.3.1.2 Contamination

Contamination of Spacecraft surfaces by the use of the Propulsion Subsystem shall be minimized. REA locations and duty cycles shall be adjusted to minimize surface contamination. Also, mechanical barriers may be employed where necessary.

3.3.1.3 Materials

The wetted Propulsion Subsystem shall be fabricated with materials that are compatible with hydrazine. All critical materials used in the fabrication of each component shall be specified on the appropriate drawings. Values for allowable mechanical properties of structural materials in their design environments shall be taken from MIL–HDBK–5E.

3.3.2 Nameplates and Product Marking

All Propulsion Subsystem elements shall be labeled in accordance with the GIS, IS20008501, Section 4.

3.3.2.1 Non–Flight Equipment Marking

Equipment not suitable for flight use shall be marked appropriately to prevent accidental substitution.

3.3.2.2 Identifiability of Wires, Cable, and Fluid Lines

Wire bundles, cables, and fluid lines shall be functionally identifiable at each end and at least every 5 meters.

3.3.2.3 Labeling of Test and Adjustment Points

All test points, adjustment devices, and alignment points shall be labeled for positive identification.

3.3.2.4 Design/Marking for Orientation

The proper orientation for placing items in storage or transportation containers shall be obvious by design or marking.

3.3.3 Workmanship

Workmanship during fabrication of the Propulsion Subsystem electrical components shall be in accordance with NASA standards as specified in NHB 5300.4 (3A, 3G–3K).

3.3.4 Interchangeability

Propulsion Subsystem elements shall be interchangeable as defined in Section 4 of the GIS, IS20008501. Following installation of electrical boxes to the Propulsion Module no welding on the Propulsion Subsystem may occur limiting interchangeability of some components. Items of identical or similar form which have different functional characteristics shall be readily identifiable and distinguishable through marking or other means.

3.3.5 Safety

Measures for personnel safety shall be taken in all phases of the design, manufacturing, and testing in order to ensure personnel safety in accordance with WSMCR 127–1. The design shall meet the factors of safety presented in Section 4 of the GIS, IS20008501.

The Propulsion Subsystem shall meet the requirements of the Safety Section of the Product Assurance Implementation Plan (PAIP), 20005397, with no exceptions.

3.3.5.1 General

Where practical, hazards shall be eliminated or removed through appropriate design measures. Hazards which cannot be eliminated or removed shall, where practical, be prevented through incorporation and use of safety devices or features. Remaining hazards shall be controlled through the use of warning devices and/or special procedures.

3.3.5.2 Automatic Hazard Detection and Safing

Automated detection and safing of hazards which may cause personnel injury or loss of the Spacecraft shall be independent of those subsystems being monitored. Where practical, the detection and safing of lesser hazards shall also follow this practice.

3.3.5.3 Safety Interlock Mechanisms/Techniques

The Spacecraft Bus shall incorporate safety interlock mechanisms, implemented in hardware or software to prevent the execution of predefined commands which are potentially hazardous to personnel or to the Spacecraft without prior confirmation or arming by ground operators.

3.3.5.4 Power Exclusion Rules

REAs will not receive power unless Spacecraft separation from the launch vehicle has occurred, they are enabled, armed and fired. Three unique commands shall be required to energize any latch valve coil.

3.3.5.5 Liquids and Gasses

The design of subsystems and components which utilize liquids or gasses shall preclude hazards due to the release of such fluids during maintenance operations.

3.3.5.6 Pressurized Vessels

The Propulsion Subsystem includes the following pressurized elements, each of which shall be designed to include the pressurized equipment factors of safety specified in Section 4 of the GIS, IS20008501: Propellant tank, Fill and Drain valves, Latching valves, Pressure transducer, Propellant filter, 1.0 lbf REA, 5.0 lbf REA, and Propellant tubing.

3.4 Documentation

3.4.1 Specifications

All parent and component specs associated with this spec are shown in the EOS–AM Spacecraft Specification Tree, 20008536.

3.4.2 Drawings

a. Welded Assembly PM	20008792
b. PM Structure/ Welded Assembly	20008793

3.4.3 Technical Manuals

None

3.4.4 Test plans

a. Propulsion Subsystem Test Plan	PN20008618

3.4.5 Procedures

a. Propulsion Module Pressure Test Procedure	TP–AT–20008618

b. Propulsion Module Electrical Functional Check	TP–FTE–20008618
c. Propulsion Subsystem Loading Procedure	TP–LOA–20008618
d. Propulsion Subsystem Emergency Detanking Procedure	TP–OFF–20008618
e. Propulsion Module Leak Test Procedure	TP–LK–20008618

3.4.6 Installation Instructions

a. Propulsion Subsystem FPR	FPR–20008618
b. Propulsion Subsystem Electrical Integration	TP–EIC–20008618
c. Propulsion Subsystem Harness Installation	20038247

3.4.7 Software Documentation

There is no software in the Propulsion Subsystem.

3.4.8 Operational Requirements Documentation

All operational requirements and constraints shall be documented in the Ground System Requirements Database (20008655).

3.5 Logistics

3.5.1 Maintenance

The Propulsion Subsystem shall be designed to require no mechanical or electrical maintenance after testing.

3.6 Precedence

3.6.1 Precedence of Design Criteria

Propulsion Subsystem design decisions shall be made to accommodate the following design criteria in the following order of precedence:

a. Safety

b. Performance

c. Reliability

d. Cost

3.6.2 Documentation Precedence

If conflicts arise between documents, the Propulsion Subsystem shall adhere to design requirements as stated in the document nearest the top of the following list of requirement documents. The General Interface Specification (GIS) is applicable to the Propulsion Subsystem design only as invoked herein and is therefore not included in the following list:

a. Requirements Document (RD)

b. Product Assurance Requirements for the EOS Observatories (PAR)

c. Unique Instrument Interface Document

d. General Instrument Interface Specification (GIIS)

e. Contract End Item (CEI) Specification

f. External Interface Control Documents (ICDs) (e.g., EOS to Launch Vehicle, EOS to TDRSS, etc)

g. Subsystem and Major Assembly Specifications

h. Component Specifications

3.7 Major Component Characteristics

3.7.1 Allocations

The Propulsion Subsystem components shall be designed to levels at or below the allocations shown in Table V for science mode.

Table V. Propulsion Subsystem Allocations

Component	Size	Mass	Power science mode	Supply	Reli-ability
	(l x w x h)	(lb)	(Watts)	Voltage	(P_s)
Propellant Tank	33.8x40.6	76	N/A	N/A	0.9988
Fill and Drain Valves	2.9x1.9 OD	0.54	N/A	N/A	0.9999
Latch Valve	4.7x1.8x3.2	1.48	0	28	0.9999
Propellant Filter	4.3x1.4 OD	0.80	N/A	N/A	0.9989
Pressure Transducer	4.8x1.25 OD	0.60	0.5	28	0.9990
Manifold Tubing	N/A	3.0	N/A	N/A	0.9978
5 lbf REA	7.5x2.5 OD	5.8	0	28	0.9948
1 lbf REA	6.6x1.5 OD	7.20	0	28	0.9948
Propulsion Module Electrical Assembly	8.8x9.3x8.5	31.4	0.0	28	0.9344
Total		123.8	0.5		0.99
Allocation		130.0	40W		0.99

3.7.2 Flight Hardware Component Characteristics

3.7.2.1 Propellant Tank Characteristics

3.7.2.1.1 Propellant Tank Definition

The propellant tank is a all titanium spheroid shell containing a AFE–322 elastomer diaphragm propellant management device. The propellant tank shall be loaded with 760 lbm of hydrazine propellant through the outlet port of the tank and pressurized with gaseous helium through the tank pressurization port. During the mission the tank shall supply pressurant gas free propellant to the subsystem at a pressure varying from 400 psi at BOL to a minimum of 90 psia at EOL and at a maximum flow rate of 0.9 lbm/sec and a temperature range from +12°C to 40°C. The propellant tank shall be able to be offloaded in either the horizontal or vertical Spacecraft positions. The propellant tank shall receive no power or commands and shall not generate telemetry. Propellant tank mass and reliability are given in Table V. Propellant tank location shall be given in the drawing Welded Assembly PM, 20008792. These requirements shall be meet following the environmental conditions as specified in the Verification Specification PS20005404.

3.7.2.1.2 Propellant Tank Stiffness Requirements

The propellant tank shall have a frequency less than 40 Hz.

3.7.2.1.3 Propellant Tank Modes

The propellant tank will have two modes: loaded and unloaded. During the unloaded mode, the tank will be pressurized to 80 psia with either gaseous nitrogen or helium except during propellant loading when the tank will be evacuated. All acceptance tests for the subsystem and Spacecraft will be performed in the unloaded mode. Loading will occur at the latest possible time during the launch site procedures.

3.7.2.1.4 Propellant Tank Performance

The propellant tank shall meet the following performance requirements:

Operating Pressure	400 psia
Proof Pressure	500 psia
Burst Pressure	600 psia
Operating Temperature	12 – 40°C
Internal Volume	28144 in^3

3.7.2.2 Fill and Drain Valve Characteristics

3.7.2.2.1 Fill and Drain Valve Definition

The titanium alloy Fill and Drain valve shall be used to access the Propulsion Subsystem to load and detank propellant and pressurize and depressurize. Each Fill and Drain valve shall have a dual redundant seal to prevent leakage of propellant or pressurizing gas. The first seal shall have a metal to metal and the second seal is a EPR Parker 515–80 O–ring of material. The fill and drain valve shall have a threaded connector that is mated to by the ground servicing equipment. Each valve shall be open or closed by the use of a nut on the valve body. The closing nut shall be torqued to 60±5 in–lbs, the AN cap shall be torqued to 65 ± 5 in–lbs, and the outer cap shall be torqued to 90±5 in–lbs. The number of open/closed cycles shall not be greater than 100. Following loading the nut shall be lockwired closed. The fill and drain valve shall have no power or command inputs and no telemetry output. Fill and Drain Valve mass and reliability shall be as given in Table V. Fill and drain valve locations shall be given in the drawing Welded Assembly PM, 20008792. These requirements shall be meet following the environmental conditions as specified in the Verification Specification, PS20005404.

3.7.2.2.2 Fill and Drain Valve Modes

The fill and drain valve will only be operated during the ground servicing phase of the Spacecraft. In all other phases the fill and drain valve shall be closed and lockwired.

3.7.2.2.3 Fill and Drain Valve Performance

The fill and drain valve shall meet the following performance requirements:

Operating Pressure	400 psia
Proof Pressure	600 psia
Burst Pressure	800 psia
Operating Temperature	12 – 40°C

3.7.2.3 Latching Valve Characteristics

3.7.2.3.1 Latching Valve Definition

The latching valve shall have a titanium alloy body and a TEFLON O–ring seat. The latch valve shall be used to control the flow of propellant to the REAs. The latch valve shall have redundant open and close coils. The valve will open or close in response to a 55 msec ±5 msec pulse at 28 V ±0.56 V on the respective coil. The valve shall draw at most 1 amp at 12°C and 28 Vdc. Each latch valve shall have a position indicator that supplies telemetry with the latch valve's open/closed status. Latch valve mass, reliability and power shall be given in Table V. Latch valve locations shall be given in the drawing Welded Assembly PM, 20008792. These requirements shall be meet following the environmental conditions as specified in the Verification Specification, PS20005404.

3.7.2.3.2 Latch Valve Modes

The latch valve shall can be operated in all modes of the Spacecraft. The latch valve will be left in the open position except during acceptance testing when the leakage across the seat shall be tested and on–orbit in case of a REA valve leakage.

3.7.2.3.3 Latch Valve Performance

The latch valve shall meet the following performance requirements:

Operating Pressure	400 psia
Proof Pressure	600 psia
Burst Pressure	800 psia
Operating Temperature	12 – 40°C
Response Time	55 ±5 msec
Operating Voltage	28 V ±2%

3.7.2.4 Propellant Filter Characteristics

3.7.2.4.1 Propellant Filter Definition

The filter shall be an all titanium alloy construction using a stacked disk configuration to filter from the propellant all particles larger than 15 microns. The propellant filter shall have no power or command inputs and no telemetry output. Propellant filter mass and reliability shall be given in Table V. Propellant filter locations shall be given in the drawing Welded Assembly PM, 20008792. These requirements shall be meet following the environmental conditions as specified in the Verification Specification, PS20005404.

3.7.2.4.2 Propellant Filter Modes

The propellant filter will not operate during the ground phase but only when the Spacecraft is on orbit when propellant flows from the propellant tank to the REAs.

3.7.2.4.3 Propellant Filter Performance

The propellant filter shall meet the following performance requirements:

Operating Pressure	400 psia
Proof Pressure	600 psia
Burst Pressure	800 psia
Filtration Level	15 microns
Particulate Capacity	(TBS–1) grams

3.7.2.5 Pressure Transducer Characteristics

3.7.2.5.1 Pressure Transducer Definition

The pressure transducer shall be used to monitor the propellant or gas pressure near the tank outlet. The pressure transducer shall use a diaphragm and strain gage to produce a linear voltage output for the different pressures. The output from the pressure transducer shall be used for the pressure telemetry. Pressure transducer mass and reliability shall be given in Table V. Pressure transducer locations shall be given in the drawing Welded Assembly PM, 20008792. These requirements shall be meet following the environmental conditions as specified in the Verification Specification, PS20005404.

3.7.2.5.2 Pressure Transducer Modes

The pressure transducer will operate in all Spacecraft modes. During Propulsion Subsystem acceptance testing the pressure transducer voltage shall be calibrated using ground support equipment. On–orbit the pressure transducer shall be on at all times.

3.7.2.5.3 Pressure Transducer Performance

The pressure transducer shall meet the following performance requirements:

Operating Pressure	400 psia
Proof Pressure	600 psia
Burst Pressure	800 psia
Output Voltage Range	0 – 5 volts
Accuracy	±2% (of full scale)
Input Voltage Range	28 V ±2%

3.7.2.6 Manifold Tubing Performance

3.7.2.6.1 Manifold Tubing Definition

Manifold tubing shall be used to connect all the wetted components together and to conduct fluid and pressurant gas from the fill and drain valves to the tank and propellant from the tank to the REAs. The tube shall be composed of either titanium 6Al–4V alloy or 304L stainless steel. The tubing shall

be 0.25 inches in outside diameter with a wall thickness of .016 inches. The manifold tubing shall have no power or command inputs and no telemetry output. Manifold tubing mass and reliability shall be given in Table V. Manifold tubing locations shall be given in the drawing Welded Assembly PM, 20008792. These requirements shall be meet following the environmental conditions as specified in the Verification Specification, PS20005404

3.7.2.6.2 Manifold Tubing Modes

The manifold tubing shall operate in all Spacecraft modes.

3.7.2.6.3 Manifold Tubing Performance

The manifold tubing shall meet the following performance requirements:

Operating Pressure	400 psia
Proof Pressure	800 psia
Burst Pressure	1600 psia

3.7.2.7 5 lbf REA Characteristics

3.7.2.7.1 5 lbf REA Definition

The 5 lbf REA shall be used to provide thrust for drag make–up and orbit adjust maneuvers. Thrust shall be provided by flowing propellant over a catalyst bed that decomposed the hydrazine into nitrogen, hydrogen and ammonia gas which flows out of the REA through a nozzle. Propellant flow shall be controlled by a series redundant solenoid valve. Heaters shall be mounted to the catalyst bed by the REA vendor. The catalyst bed temperature shall be greater than 200°C prior to firing to prevent thermal shock and damage to the catalyst grains. A thermocouple shall be also mounted to the catalyst bed to monitor its temperature which is supplied to telemetry. A heater shall be mounted to the solenoid valve to prevent propellant from freezing. The solenoid valve shall be activated when the 28 V bus applied from the PMEA. The 5 lbf REA power, mass and reliability shall be given in Table V. The 5 lbf REA locations shall be given in the drawing Welded Assembly PM, 20008792 and Mechanical Interface Control Drawing MICD20008618. These requirements shall be meet following the environmental conditions as specified in the Verification Specification, PS20005404. The thruster assembly shall be capable of successful restart and continued operation within specification requirements at all valve and thrust chamber temperatures which might result from thermal soak back after any operation during the mission. Each REA shall be capable of satisfactory extended operation with saturated propellants over the supply pressure range form the maximum expected propellant supply absolute pressure plus 10% to 80% of the minimum predicted end–of–life propellant supply absolute pressure without permanent performance degradation. These margins shall be demonstrated as part of the component qualification test.

3.7.2.7.2 5 lbf REA Modes

The 5 lbf REA will be used in the delta–V mode. During ground operations the individual valves will be leak tested and flow tested. On orbit the REAs will be used to provide thrust.

3.7.2.7.3 5 lbf REA Performance

The manifold tubing shall meet the following performance requirements:

Coil Resistance	62 – 69Ω at 21.1°C
Operating Pressure	400 psia
Proof Pressure	800 psia
Burst Pressure	1600 psia
Pressure Range	400 – 90 psia
Thrust Range	5.0 to 2.3 lbf
Specific Impulse Range	228 to 219 sec
Duty Cycles	Continuous
Throughput	455 lbm
Valve Leakage	3 scc/hr of GHe at MOP
Operating Voltage	28 V ±2%

The three sigma variation in (BOL) steady–state thrust among the REAs of this subsystem shall not exceed ±5% under identical propellant supply conditions.

3.7.2.8 1 lbf REA Characteristics

3.7.2.8.1 1 lbf REA Definition

The 1 lbf REA shall be used to provide thrust for attitude control maneuvers. Thrust shall be provided by flowing propellant over a catalyst bed that decomposed the hydrazine into nitrogen, hydrogen and ammonia gas which flows out of the REA through a nozzle. Propellant flow shall be controlled by a series redundant solenoid valve. Heaters shall be mounted to the catalyst bed by the component vendor. The catalyst bed temperature shall be greater than 200°C prior to firing to prevent thermal shock and damage to the catalyst grains. A thermocouple shall be mounted to the catalyst bed to monitor its temperature which is supplied to telemetry. A heater shall be mounted to the solenoid valve to prevent propellant from freezing. The solenoid valve shall be activated when the 28 V bus is applied from the PMEA. The 1 lbf REA power, mass and reliability shall be given in Table V. 1 lbf REA locations shall be given in the drawing Welded Assembly PM, 20008792. These requirements shall be meet following the environmental conditions as specified in the Verification Specification, PS20005404. The thruster assembly shall be capable of successful restart and continued operation within specification requirements at all valve and thrust chamber temperatures which might result from thermal soak back after any operation during the mission. Each REA shall be capable of satisfactory extended operation with saturated propellants over the supply pressure range from the maximum expected propellant supply absolute pressure plus 10% to 80% of the minimum predicted end–of–life propellant supply absolute pressure without permanent performance degradation. These margins shall be demonstrated as part of the component qualification test.

3.7.2.8.2 1 lbf REA Modes

The 1 lbf REA will be used in all Spacecraft modes, except science mode. During ground operations the individual valves will be leak tested and flow tested. On orbit the REAs will be used to provide thrust.

3.7.2.8.3 1 lbf REA Performance

The 1 lbf REA shall meet the following performance requirements:

Input Power (Both Coils)	10 W (max)
Operating Pressure	400 psia
Proof Pressure	800 psia
Burst Pressure	1600 psia
Pressure Range	400 – 90 psia
Thrust Range	1.20 to 0.30 lbf
Specific Impulse Range	229 to 226 sec
Minimum Duty Cycle	48 ms on/976 ms off
Maximum Duty Cycle	Continuous
Throughput	92.04 lbm
Valve Leakage	3 scc/hr of GHe at MOP
Operating Voltage	28 V ±2%

The three sigma variation in (BOL) steady–state thrust among the REAs of this subsystem shall not exceed ±5% under identical propellant supply conditions.

3.7.2.9 PMEA Characteristics

3.7.2.9.1 PMEA Definition

The PMEA shall house the electronics required to generate individual fire timing for each REA, enable and arm each REA, operate fuel line latch valves, control REA chamber valve heaters and switch pressure transducers on or off for one half system.

3.7.2.9.2 PMEA Commanding

The PMEA shall be capable of accepting relay drive or serial message commands from the Bus Data Unit (BDU). It shall also accept and execute 16 bit serial fire commands on a separate I/O channel from either the BDU or, if in Safe Hold mode, from the Attitude Control Electronics (ACE). Fire commands may originate in the ACE, on the ground, or in the flight software. The PMEA will execute thruster commands following receipt of the Thruster Command Execute pulse from the BDU. ACE thruster commands will execute upon receipt of a last word indicator in the serial command. The ACE will generate a signal to the PMEA to define when the GN&C subsystem is in safe mode. Commanding of the PMEA relative to Spacecraft mode is shown in Table VI.

Table VI. Operation of PMEA

Function	Spacecraft Computer Mode or Ground	Safe Hold Mode
Accept REA Fire Commands from BDU	Enabled	Inhibited
Accept REA Fire Commands from ACE	Inhibited	Enabled
Serial Housekeeping Telemetry to BDU	Enabled	Enabled
Enable/Arm REAs Commands from BDU	Enabled	Enabled
HCE Commands from BDU	Enabled	Enabled
Pressure Transducer On/Off Commands from BDU	Enabled	Enabled
EPC On/Off Control via BDU	Enabled	Enabled
PMEA On/Off Control via BDU	Enabled	Enabled

3.7.2.9.3 PMEA Safe Mode Commanding

The PMEA shall await ground intervention in response to safe mode operation if the PMEA is not configured for REA actuation and the GN&C requires REA firing for momentum unloading or attitude control. The PMEA shall inhibit execution of SCC fire commands while the Safe Hold signal is asserted and accept them once the Safe Hold signal is deasserted. In the event that the safe hold signal is asserted by fault, recovery requires switching over to the redundant ACE.

3.7.2.9.4 PMEA Telemetry

PMEA telemetry shall be transmitted to the BDU on two separate serial interfaces. The thruster control telemetry interface will provide on/off status for each thruster and also will provide command integrity status. The relay drive telemetry interface will provide position status of all PMEA relays and separation signal status.

3.7.2.10 EPC Characteristics

3.7.2.10.1 EPC Definition

The Electrical Power Conditioners shall receive primary and redundant 120 V fused power and return feeds from the 120 V fuse distribution boxes. Electrical isolation shall be maintained between the redundant feeds. The EPC's outputs shall interface directly to the 28 V FDBs before being distributed to propulsion module components.

Each EPC shall provide discrete telemetry regarding health and status.

3.7.3 Flight Software Component Characteristics

The Propulsion Subsystem has no software requirements.

3.8 Personnel and Training

The training of personnel for the EOS–AM mission shall be done in accordance with the Training Plan, MM20008622.

(This page intentionally left blank.)

4 QUALITY ASSURANCE PROVISIONS

The requirements for the formal verification of the performance, design, and construction of the Propulsion Subsystem shall be as specified in this section. These requirements define the extent to which the Propulsion Subsystem must demonstrate capability to meet the design and performance requirements specified in Sections 3.2 and 3.3 of this document.

4.1 Propulsion Subsystem Verification

Verification of each Section 3.2 and 3.3 requirement shall be performed as defined in the Verification Matrix, Attachment A, supplied under separate cover.

4.1.1 Verification Phases

Phases shall be either Acceptance or Qualification as defined in PS2005404.

4.1.2 Verification Methods

The following methods shall be used as appropriate to verify each of the requirements in Section 3.2 and 3.3: Demonstration, Test, Analysis, and/or Inspection. Each method shall be as defined in PS20005404.

4.1.3 Responsibility for Verification

MM–ASD shall verify each requirement specified in Section 3.2 and 3.3 of this document. Specifically the Propulsion Subsystem engineer, component designers and subcontract support engineers shall assume direct responsibility. Each Propulsion component engineer shall develop a verification plan that supports the Propulsion Subsystem plan.

4.1.4 Verification Conditions

Each Propulsion component shall be exposed to verification conditions which represent those environments encountered throughout the ground phase and flight mission. The environmental conditions and levels of exposure are defined in the Verification Specification, PS20005404, Section 4.

4.2 Testing

4.2.1 Reliability testing

Reliability verification shall form a major part of the Propulsion verification program. Requirements and responsibility for reliability verification are found in Section 7, Design Assurance and Reliability Plan, of the PAIP, 20005397. All test data is to be collected, documented and used in support of the EPS reliability analysis conducted by Reliability Engineering. All testing shall be performed within the guidelines of the System Safety Plan outlined in Section 4 of the PAIP, 20005397.

4.2.2 Engineering evaluation and test requirements

4.2.2.1 Test Flows

Detailed test flows shall be generated for each propulsion component. Tests shall be identified in the test flow with traceability to the particular requirement being verified in the applicable performance specification. Figure 3 is a typical component verification flow diagram which shall be used as a basis to develop detailed component verification flow diagrams. The Propulsion overall verification flow diagram is shown in PN20008618.

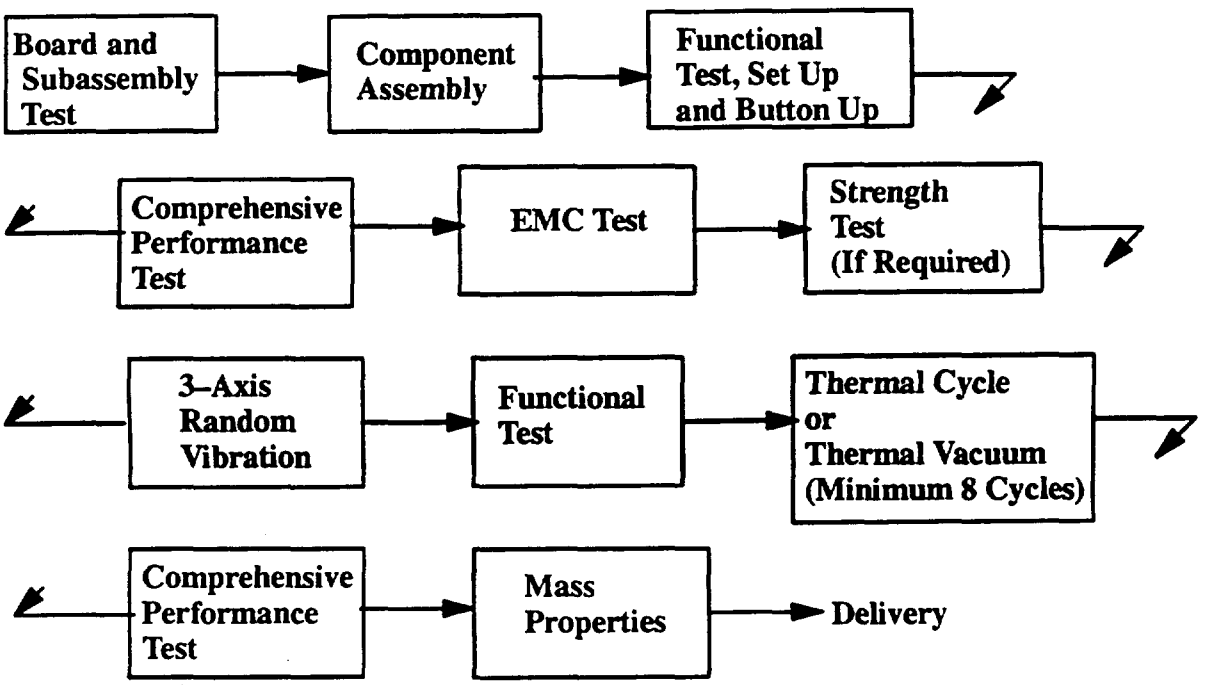

Figure 3. Component Verification Flow Diagram

4.2.2.2 Performance Tests

The Propulsion Subsystem and its components shall be subjected to the performance tests defined in the Verification Specification PS20005404

4.2.2.3 Verification Tests

Each Propulsion component shall be subjected to the verification tests defined in PS20005404, Section 4. Performance tests, as defined above in Section 4.2.2.2, shall be performed during verification tests to demonstrate functionality during a flight environment.

4.2.3 Acceptance Testing

Acceptance testing shall be performed on all flight components to verify workmanship and functionality. The acceptance test levels are defined in the Verification Specification PS20005404, Section 4.

4.2.4 Qualification Testing

Qualification testing of QTM and protoflight components shall be used to demonstrate adequacy of design limits. The qualification test levels are defined in the Verification Specification, PS20005404.

4.2.5 Installation Testing and Checkout

The performance tests, Electrical Interface Tests, defined in the Verification Specification and referenced above in Section 4.2.2.2 will be implemented to verify that all interface signals are within acceptable limits or applicable performance specifications prior to integration of an assembly or a component into the next higher level. Also all component mechanical interface dimensions will be verified.

4.3 Special Propulsion Subsystem Verifications

Any Propulsion components identified on the limited–life or critical items lists shall be tested in accordance with Verification Plan, PS20005404.

4.4 Test Equipment

[1] Existing test equipment shall be used wherever practical.

[2] Where new test equipment is required to test units which are physically or functionally identical or similar, the equipment shall be designed to perform its task(s) on each element of that group, where practical.

4.4.1 Test Equipment Safety Features

[1] Test equipment shall incorporate any safety interlocks or other safety features necessary to reduce the introduction of safety hazards by the test equipment.

[2] Any safety feature included in any Spacecraft test equipment shall give a visual, auditory, or electronic indication of activation when it is activated.

4.4.2 Test Equipment Verification

Unless otherwise specified herein, test equipment used to measure Propulsion Subsystem performance characteristics shall be capable of demonstrating that

a. it will not impose environments on the tested item(s) beyond the levels called for in the Verification Specification, PS20005404, and

b. it is capable of imposing the test levels called for in the Verification Specification, PS20005404.

4.4.3 Test Equipment Calibration

Test equipment shall be calibrated in accordance with GSFC 420–05–02.

4.5 Verification Documentation

The subsystem verification activities shall be documented in:

a. Verification Reports as defined in PS20005404.

b. Test procedures

c. Test logs

d. Test Review Board meeting minutes

5 PREPARATION FOR DELIVERY

Not Applicable.

(This page intentionally left blank.)

6 NOTES

6.1 Definitions

Pulse Count	the total number of REA on/off cycles for a given period of time
Throughput	the quantity of propellant flowed through an REA during its qualification
Off-loading	the unloading of the hydrazine propellant from the tank and depressurization of the subsystem

6.2 Acronyms and Abbreviations

ACE	Attitude Control Electronics
BDU	Bus Data Unit
C&DH	Command and Data Handling
CEI	Contract End Item Specification
EMC	Electromagnetic Compatibility
EPC	Electric Power Controller
EOS	Earth Observing Satellite
FDB	Fuse Distribution Board
FPR	Flow Process Record
GFP	Government Furnished Part
GLP	Government Loaned Part
GHe	Gaseous Helium
GIIS	General Instrument Interface Specification
GIS	General Interface Specification
GN&CH	Guidance Navigation, and Control Subsystem
HCE	Heater Control electronics
ICD	Interface Control Drawing
IS	Interface Specification
I&T	Integration and Testing
LV	Latch Valve
MAGE	Mechanical Aerospace Ground Equipment
MOP	Maximum Operating Pressure

N/A	Not Applicable
PA	Product Assurance
PM	Propulsion Module
PMEA	Propulsion Module Electronics Assembly
PMD	Propellant Management Device
PPSU	Propellant and Pressurant Service Unit
PSI	Pounds per Square Inch
PSIA	Pounds per Square Inch Absolute
QTM	Qualification Test Model
REA	Rocket Engine Assembly
SCC/HR	Standard Cubic Centimeters per Hour
SV	Fill and Drain Valve
TBD	To Be Determined
TBR	To Be Reviewed
TBS	To Be Supplied
TNK	Propellant Tank
VDC	Volts DC
WTR	Western Test Range

6.3 Exceptions to the GIS and GIIS

None

6.4 Requirements Traceability Matrix

Requirements in Section 3 of this specification were derived from the source documents shown in the Requirements Traceability Matrix, Attachment B, supplied under separate cover.

APPENDIX I

10 PROPULSION MODULE COMMAND LIST

side 1	side 2

Thruster Control

Enable Delta–V REAs and Catbed Htrs (1–4)	Enable Delta–V REAs and Catbed Htrs (1–4)
Enable ACS REAs and Catbed Htrs (odd)	Enable ACS REAs and Catbed Htrs (even)
Disable Delta–V REAs and Catbed Htrs (1–4)	Disable Delta–V REAs and Catbed Htrs (1–4)
Disable ACS REAs and Catbed Htrs (odd)	Disable ACS REAs and Catbed Htrs (even)
Arm Delta–V REAs (1–4)	Arm Delta–V REAs (1–4)
Arm ACS REAs (odd)	Arm ACS REAs (even)
Disarm Delta–V REAs (1–4)	Disarm Delta–V REAs (1–4)
Disarm ACS REAs (odd)	Disarm ACS REAs (even)
Fire REA 1	Fire REA 1
Fire REA 2	Fire REA 2
Fire REA 3	Fire REA 3
Fire REA 4	Fire REA 4
Fire REA 5	Fire REA 6
Fire REA 7	Fire REA 8
Fire REA 9	Fire REA 10
Fire REA 11	Fire REA 12
Fire REA 13	Fire REA 14
Fire REA 15	Fire REA 16

Latch Valve Control

Latch Valve 1 Enable	Latch Valve 2 Enable
Latch Valve 1 Arm	Latch Valve 2 Arm
Latch Valve 1 Open Primary	Latch Valve 2 Open Primary
Latch Valve 1 Open Backup	Latch Valve 2 Open Backup
Latch Valve 1 Close Primary	Latch Valve 2 Close Primary
Latch Valve 1 Close Backup	Latch Valve 2 Close Backup
Latch Valve 1 Disable & Disarm	Latch Valve 2 Disable & Disarm

Pressure Transducer Control

Enable Pressure Transducer 28 Vdc Power	Enable Pressure Transducer 28 Vdc Power
Disable Pressure Transducer 28 Vdc Power	Disable Pressure Transducer 28 Vdc Power

Switched Power Control

Enable Side 1 28 Vdc Heater Power	Enable Side 2 28 Vdc Heater Power
Disable Side 1 28 Vdc Heater Power	Disable Side 2 28 Vdc Heater Power
Enable REA Side 1 TCVH +28 Vdc Power	Enable REA Side 2 TCVH +28 Vdc Power
Disable REA Side 1 TCVH +28 Vdc Power	Disable REA Side 2 TCVH +28 Vdc Power

Heater Electronics Control

Enable Tank Htr, Line Htrs 1–5	Enable Tank Htr, Line Htrs 1–5
Enable BDU Survival Htr, Line Htrs 6–10	Enable BDU Survival Htr, Line Htrs 6–10
Enable PMEA(1&2) Survival Htr EPC(1–4) Survival Htrs	Enable PMEA(1&2) Survival Htr EPC(1–4) Survival Htrs
Enable Tank Heater Thermostat Bypass	Enable Tank Heater Thermostat Bypass
Disable Tank Heater Thermostat Bypass	Disable Tank Heater Thermostat Bypass
Disable Tank Htr	Disable Tank Htr
Disable Line Htr 1	Disable Line Htr 1
Disable Line Htr 2	Disable Line Htr 2
Disable Line Htr 3	Disable Line Htr 3
Disable Line Htr 4	Disable Line Htr 4
Disable Line Htr 5	Disable Line Htr 5
Disable Line Htr 6	Disable Line Htr 6
Disable Line Htr 7	Disable Line Htr 7
Disable Line Htr 8	Disable Line Htr 8
Disable Line Htr 9	Disable Line Htr 9
Disable Line Htr 10	Disable Line Htr 9
Disable BDU Survival Htr	Disable BDU Survival Htr
Disable PMEA 1 Survival Htr	Disable PMEA 1 Survival Htr
Disable PMEA 2 Survival Htr	Disable PMEA 2 Survival Htr
Disable EPC 1 Survival Htr	Disable EPC 1 Survival Htr
Disable EPC 2 Survival Htr	Disable EPC 2 Survival Htr
Disable EPC 3 Survival Htr	Disable EPC 3 Survival Htr
Disable EPC 4 Survival Htr	Disable EPC 4 Survival Htr

APPENDIX II

20 TELEMETRY INPUTS

Telemetry Point	Units	Type	Bits	1 kbit H/K		16 kbit H/K	
				Rate	Total	Rate	Total
Latch Valve (Open/Close)	2	PB	1	1	0.03	8	0.24
PMEA Side Status (On/Off)	2	PB	1	1	0.03	8	0.24
Propellant Tank Pressure	1	AA	8	1	0.12	1	0.12
PMEA Temperature	2	PA	8	1	0.24	1	0.24
REA Temp	16	PA	8	1	1.95	8	15.6
Line Temperature	16	PA	8	1	1.95	1	1.95
Propellant Tank Temperature	4	PA	8	1	0.48	1	0.48
Catalyst Bed Temperature	16	PA	8	1	1.95	8	15.6
PMEA Relay Status	2	S	48	1	1.46	8	11.7
PMEA secondary o/p voltages	4	AA	8	1	0.49	8	3.9
PMEA Thruster fire control status	2	S	112	1	–	8	27.3

(This page intentionally left blank.)

PS20008618
CAGE No. 49671
05 August 1993

Performance Specification
Propulsion Module
for EOS–AM Spacecraft
(SP–702)

Prepared under:
Contract NAS5–32500
NASA Goddard Space Flight Center
Greenbelt, Maryland 20771

Prepared by:
Martin Marietta Corporation
Astro Space
P.O. Box 800
Princeton, New Jersey 08543–0800

DCC080593

REVISION LOG

This log identifies those portions of this document which have been revised since the original issue. Revised portions of each page, for the current revision only, are identified by marginal striping.

Revision	Paragraph Number(s) Affected	Rev. Date	Approval
Initial Issue		08/05/93	CM/GSR

(This page intentionally left blank.)

TABLE OF CONTENTS

SECTION / PARAGRAPH	TITLE	PAGE
1	SCOPE	1
1.1	Identification	1
2	APPLICABLE DOCUMENTS	3
2.1	Government documents	3
2.1.1	Military	3
2.1.2	NASA	3
2.2	Non–Government Documents	3
2.2.1	SPECIFICATIONS	4
2.2.2	STANDARDS	5
2.2.3	DRAWINGS	5
2.2.4	OTHER PUBLICATIONS	5
3	REQUIREMENTS	7
3.1	Critical Item Description	7
3.1.1	Propulsion Module Functional Description	8
3.1.2	Interface Definition	8
3.1.2.1	Electrical Interfaces	10
3.1.2.2	Data Interfaces	12
3.1.2.3	Mechanical Interfaces	15
3.1.2.4	Thermal Interfaces	15
3.1.2.5	Propulsion Subsystem Servicing Interfaces	16
3.1.3	Major Component List	18
3.2	Characteristics	18
3.2.1	Performance	18
3.2.1.1	Propulsion Subsystem	18
3.2.1.2	Structure Assembly	19
3.2.1.3	Electrical Assembly Performance	20
3.2.1.4	Electrical Accommodations Assembly	21
3.2.2	Physical Characteristics	22

TABLE OF CONTENTS (Continued)

SECTION / PARAGRAPH	TITLE	PAGE
3.2.2.1	Mass	22
3.2.2.2	Power Consumption	23
3.2.2.3	Dimension	24
3.2.2.4	Transport and Storage	24
3.2.2.5	Integration and Test	24
3.2.2.6	Layout	26
3.2.2.7	Configuration	26
3.2.2.8	Natural Frequency	26
3.2.2.9	Center of Gravity (CG)	26
3.2.3	Reliability	27
3.2.4	Durability	27
3.2.5	Maintainability	27
3.2.6	Environmental Conditions	27
3.2.6.1	General	27
3.2.7	Transportability	28
3.3	Design and Construction	28
3.3.1	Materials, Processes, and Parts	28
3.3.2	Electric Fields	28
3.3.3	Magnetic Fields	28
3.3.4	Nameplates and Product Marking	29
3.3.5	Workmanship	29
3.3.6	Safety	29
3.3.6.1	Liquid and Gas Hazards	30
3.3.7	Human Performance/Human Engineering	30
3.4	Documentation	30
3.4.1	Specifications	30
3.4.2	Drawings	30
3.4.3	Test Plans and Procedures	30
3.5	Precedence	30

TABLE OF CONTENTS (Continued)

SECTION / PARAGRAPH	TITLE	PAGE
4	QUALITY ASSURANCE PROVISIONS	33
4.1	General	33
4.1.1	Responsibility for Tests	33
4.1.2	Special Tests and Examinations	33
4.1.3	Reliability Test	33
4.1.4	Engineering Evaluation and Test	33
4.1.5	Protoflight Test	33
4.1.6	Installation Test and Checkout	34
4.1.6.1	Electrical Integration and Checkout (EIC)	34
4.1.6.2	Interface Verification Test (IVT)	35
4.1.6.3	Functional Test (FT)	35
4.1.6.4	Comprehensive Performance Test (CPT)	35
4.1.6.5	Interface Verification Test (IVT)	35
4.1.7	Formal Test Verification	35
4.2	Quality Conformance Inspections	35
4.2.1	Method of Verification	36
4.2.1.1	Inspection	36
4.2.1.2	Analysis	36
4.2.1.3	Demonstration	36
4.2.1.4	Test	36
4.2.1.5	Classification of Characteristics	36
4.2.1.6	Test Equipment	36
5	PREPARATION FOR DELIVERY	39
5.1	General	39
6	NOTES	41
6.1	Definitions	41
6.2	Abbreviations and Acronyms	41
6.3	Exceptions to the GIS and GIIS	43
6.4	Requirements Traceability Matrix	43

TABLE OF CONTENTS (Continued)

SECTION / PARAGRAPH	TITLE	PAGE
	APPENDIX I	
10	ELECTRICAL CONNECTOR CONTACT ASSIGNMENTS	45

LIST OF FIGURES

FIGURE	TITLE	PAGE
1	Propulsion Subsystem Functional Diagram	9
2	Electrical Interface Connector Bracket Position	10
3	Electrical Power Interface Diagram	11
4	ACE to PMEA Interface	14
5	Attitude Control Thruster Stayout Zones	16
6	Thruster Locations, Orientations, and Numbering	17
7	Propulsion Module Design Volume	25
8	Propulsion Module Integration and Test Flow	34
9	Electrical Interface Bracket Connector Locations	45

LIST OF TABLES

TABLE	TITLE	PAGE
I	Propulsion Module Subsystem Functions	7
II	Propulsion Module Major Component List	18
III	PM Component Size, Mass, and Power Allocations	22
IV	DC Power Consumption	23
V	Thermal Dissipation	24

TBD LOG

ITEM	SECTION	PAGE	SUBJECT	RESP.	DUE
TBD–1	Appendix I	46	Contact number designation	S. Holaday	03/31/94
TBD–2	Appendix I	46	Circuit category designation	S. Holaday	09/30/93

(This page intentionally left blank.)

1 SCOPE

1.1 Identification

This specification establishes the performance, design, development, and test requirements for the EOS–AM Spacecraft Propulsion Module critical item. The function of this module is to provide impulse as required for velocity change and attitude control. The Propulsion Module (PM) will meet all applicable requirements of the Contract End Item (CEI) Specification for the EOS–AM Spacecraft, PS20005396 (SEP–101), throughout its design life. The principle requirement of modularity to facilitate Spacecraft construction, maintenance, and serviceability is satisfied by this module design. The PM will be designed to facilitate producibility, integration, and accessibility to the internal components while minimizing weight. The module will be modular to allow on–ground removal and replacement onto the Spacecraft core.

(This page intentionally left blank.)

2 APPLICABLE DOCUMENTS

All and only those documents referenced in Sections 3, 4, 5, and Appendices of the specification shall be listed in Section 2 of the specification. References are confined to documents currently available at the time of issuance of the current revision of this specification.

2.1 Government documents

The following documents of the exact issue shown, form a part of this specification to the extent specified herein. In the event of conflict between the documents referenced herein and the contents of this specification, the contents of this specification shall take precedence, except as defined in Section 3.9 herein.

2.1.1 Military

WSMCR 127-1 15 December 1989	Western Space and Missile Center Range Safety Requirements
MIL–STD–1472 (Rev. D) 20 March 1991	Human Engineering Design Criteria for Military Systems, Equipment, and Facilities
MIL-STD-1553B	Aircraft Internal Time Division Command/Response Mutiplex Data Bus

2.1.2 NASA

NHB 5300.4 (3A–1) December 1976	Requirements for Soldered Electrical Connections, Change 1
NHB 5300.4 (3G) April 1985	Requirements for Interconnecting Cables, Harnesses, and Wiring
NHB 5300.4 (3H) May 1984	Requirements for Crimping and Wire Wrap
NHB 5300.4 (3I) May 1984	Requirements for Printed Wiring Boards
NHB 5300.4 (3J) April 1985	Requirements for Conformal Coating and Staking of Printed Wiring Boards and Electronic Assemblies
NHB 5300.4 (3K) January 1986	Requirements for Rigid Printed Wiring Boards and Assemblies

2.2 Non–Government Documents

Unless otherwise specified, the following documents of the latest issue form a part of this specification to the extent specified herein. In the event of conflict between the documents referenced herein and the contents of this specification, the contents of this specification shall be considered a superseding requirement, except for higher tier documents.

2.2.1 SPECIFICATIONS

IS20008501	General Interface Specification for the EOS–AM Spacecraft (ICD–101)
PS20001415	Structures and Mechanisms Subsystem Specification SP–101
PS20004749	Electrical Power Subsystem Performance Specification, SP–501
PS20005404	Verification Specification for the Earth Observing System (VRD–110)
PS20008549	Thermal Control Subsystem Performance Specification, SP–201
PS20008617	Propulsion Subsystem Performance Specification, SP–701
PS20008567	Command and Data Handling Subsystem Performance Specification
PS20008568	Performance Specification for the Bus Data Unit, SP–302
PS20008636	Electrical Accommodations Subsystem Specification, SP–741
PN20005869	Electromagnetic Compatibility (EMC) Control Plan SEP–106
PN20001412	EOS–AM Spacecraft Contamination Control Plan (SEP–107)
20001430	Ground Support Equipment Requirements Document (SEP–104)
PN20005397	Performance Assurance Implementation Plan (PAIP)(PA–100)
PN20005404	Verification Plan for the Earth Observing System (VRD–110)
PN20008664	Comprehensive Test Plan for the EOS–AM (VRD–105)
PN20008618	Propulsion Module Test Plan
20008536	EOS–AM Spacecraft Specification Tree

Source:	Martin Marietta Astro Space P. O. Box 800 Princeton, NJ 08543–0800

2.2.2 STANDARDS

S32534, Rev. E	Identification Marking
Source:	Martin Marietta Astro Space P. O. Box 800 Princeton, NJ 08543–0800

2.2.3 DRAWINGS

20043126G1	Propulsion Module Assembly Drawing
20038247	Propulsion Module Harness Installation Drawing
Source:	Martin Marietta Astro Space P. O. Box 800 Princeton, NJ 08543–0800

2.2.4 OTHER PUBLICATIONS

None

(This page intentionally left blank.)

3 REQUIREMENTS

The Propulsion Module will meet all performance requirements specified herein under all combinations of environmental conditions and input signals described below and after exposure to the launch environment described herein. All requirements are end–of–life specifications unless stated otherwise.

3.1 Critical Item Description

The Propulsion Module contains elements of several spacecraft subsystems. These subsystems and their major functions performed within the PM are described in Table I.

Table I. Propulsion Module Subsystem Functions

Subsystem and Performance Specification	Major Subsystem Functions
Propulsion Subsystem (PROPS) PS20008617	– Provides Impulse for velocity change maneuvers. – Provides torque impulse for attitude control.
Command and Data Handling Subsystem (C&DH) PS20008567	– Provides commands for thruster activation, latch valve positioning, and temperature maintenance. – Provides PM health, status, performance, and command response telemetry.
Electrical Power Subsystem (EPS) PS20004749	– Supplies power to support PM operation and health maintenance. – Provides power distribution and fusing for all PM 120 volt users. – Provides power conversion and fusing for all PM 28 volt users.
Thermal Control Subsystem (TCS) PS20008549	– Provides heaters, sensors, coatings, finishes, blanketing, and control for maintaining PM temperatures.
Electrical Accommodations Subsystem (EAS) PS20008636	– Provides the harness and connections for electrical components and discrete wiring. – Grounding and signal reference connections.
Structures and Mechanisms Subsystem (SMS) PS20001415	– Provides mounting and protection for EM components. – Provides a thermal path to carry dissipated component power. – Provides load path distribution and sharing with spacecraft primary structure.
Guidance, Navigation and Control Subsystem (GN&CS) PS20004937	– Provides commands for thruster activation during spacecraft safe hold operating mode.

The propulsion module is located within bay one of the spacecraft primary structure. The PM will, under control of the C&DH and GN&CS equipment, support system operating modes during all mission phases. These phases include prelaunch, launch/ascent, orbit acquisition initialization, orbit acquisition, operational initialization, operational, and end–of–mission. System operating modes

for the PM include ground test, standby, science, delta–V, survival, and safe modes. The PM will provide impulse for the accomplishment of orbit acquisition maneuvers, and orbit maintenance maneuvers and will provide impulsive torques for on-orbit three-axis attitude control, three-axis inertial attitude slews, three-axis earth and sun acquisitions, and reaction wheel unloading.

3.1.1 Propulsion Module Functional Description

Figure 1 shows a functional block diagram of the Propulsion Module. The PM will consist of a propulsion subsystem and three assemblies; structure, electrical, and thermal. Both structure and electrical assemblies will be functioning during all mission phases including launch. The thermal control assembly will be enabled prior to launch and will remain enabled during all subsequent mission phases. The propulsion subsystem will be activated prior to launch and shall remain operational during all following phases.

The propulsion subsystem will be of an all monopropellant design and will produce thrust through the catalytic decomposition of hydrazine. The propulsion subsystem design will be compatible with the launch vehicle for elliptical orbit insertion and will be functionally capable of reconfiguration to support all spacecraft functions. The propulsion subsystem will be capable of providing, without restriction, the velocity increments and control torques required during all phases of the mission. The propulsion subsystem will include all propellant and pressurant tankage, plumbing, and thrusters necessary to meet the requirements identified herein.

The structure assembly will provide the framework on which all of the other assemblies and their components are mounted and will be the primary interface between the Propulsion Module and the rest of the Spacecraft.

The electrical assembly will handle all command and telemetry between the Spacecraft and the Propulsion Module. Spacecraft EPS power will be supplied and converted, as required, to electrical assembly boxes, the propulsion assembly, and the thermal control assembly. The electrical accommodations assembly will distribute power provided by the Spacecraft and will provide electrical interconnections between all PM components.

The thermal control assembly design will include thermal control of the electrical boxes, the protection of the PM components from heat generated by the thrusters, and the temperature maintenance of all PM equipment, including but not limited to: tanks, lines, avionics, valves, and the catalyst beds of the monopropellant thrusters. Heaters, multilayer insulation blankets, and radiators will be used to meet the thermal control requirements.

3.1.2 Interface Definition

The propulsion Module and all included components shall utilize the standard interfaces defined in the General Interface Specification (GIS) for the Earth Observing System, IS20008501. Exceptions must be explicitly noted in either the component specifications or this document.

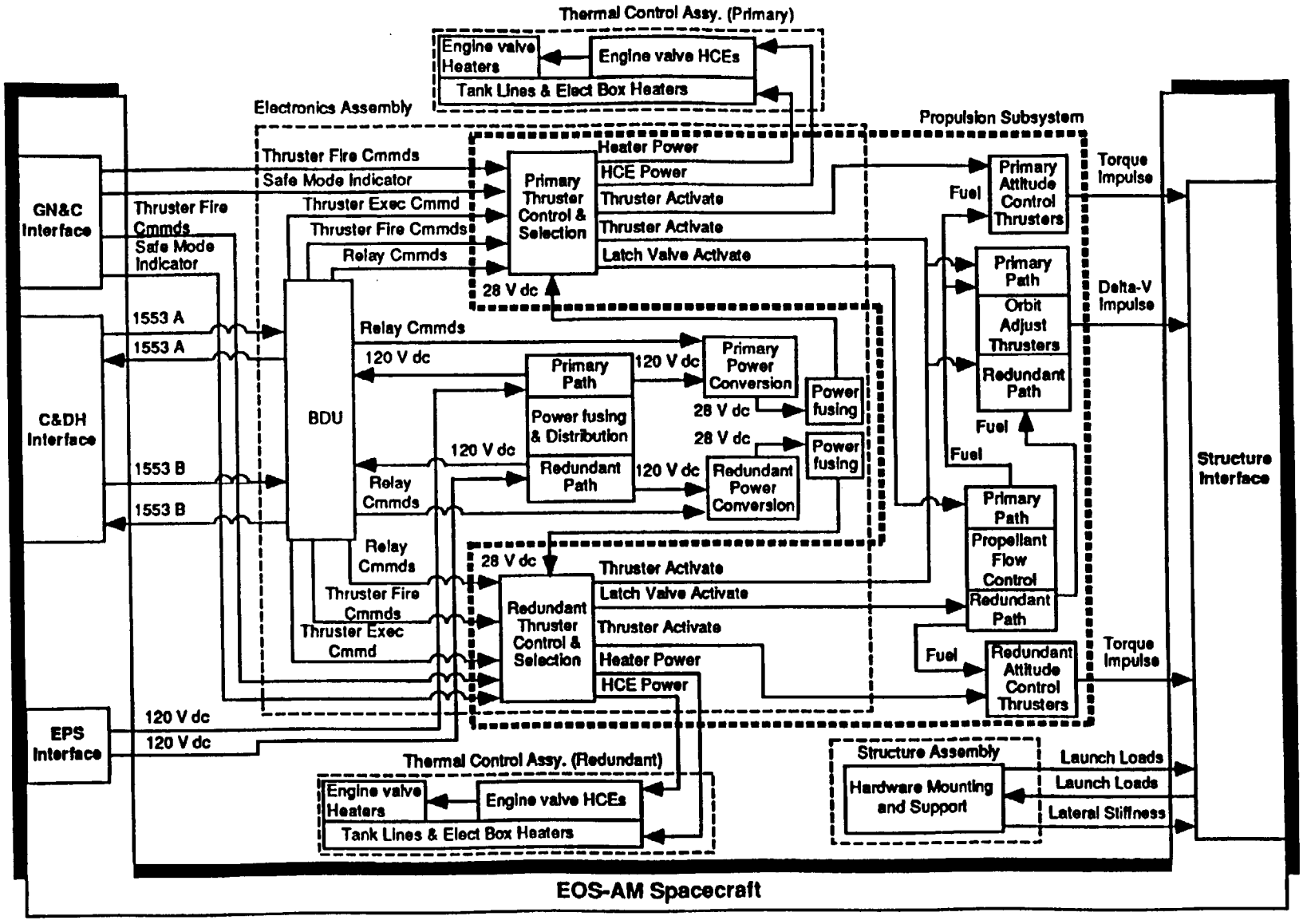

Figure 1. Functional Block Diagram

PS20008618
05 August 1993

3.1.2.1 Electrical Interfaces

Electrical connections between and among the components of all subsystems within the module are part of the module design. Connector pin–outs, signal nomenclature, and contact sizing shall be as specified in Appendix I. Propulsion module electrical interface bracket connector locations shall be as depicted in Figure 9 of Appendix I.

[1] An electrical interface connector bracket attached to the –X panel, as depicted in Figure 2, shall support all module harness interface connectors required to mate with the bus harness.

[2] All electrical interfaces between the spacecraft and the Propulsion Module shall meet the requirements of the GIS Section 3 (IS20008501) regarding power, grounds, standard signal interfaces, test points, connectors and pin allocations.

[3] The Propulsion Module shall meet the requirements specified for spacecraft equipment in Equipment/Subsystems EMI Requirements section of PN20005869 (EMC Control Plan).

[4] All electrical connections between the components in the Propulsion Module and between the Propulsion Module and the spacecraft core shall be accomplished through the use of interconnecting cables as described in the Propulsion Module harness installation drawing, 20038247.

[5] These cables and connections shall meet the Harness Design and Construction requirements of the Electrical Accommodations Subsystem Performance Specification, PS20008636.

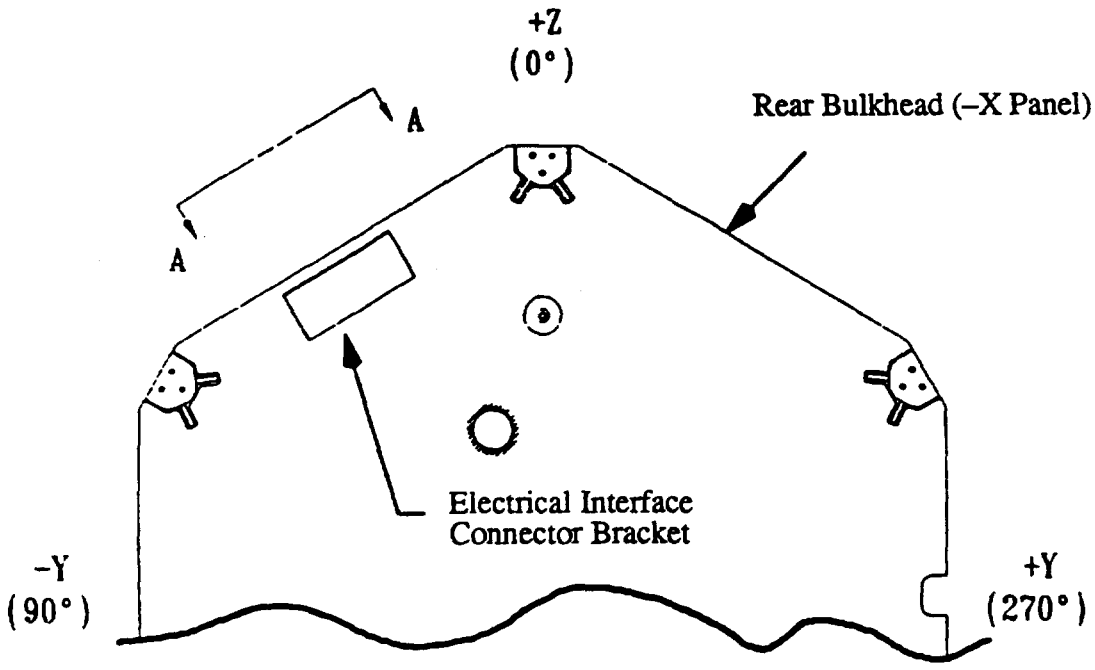

Figure 2. Electrical Interface Connector Bracket Position

3.1.2.1.1 Spacecraft Power Bus Interface

[1] The PM shall accept prime power voltage at 120 volts dc with a regulation of ±4%. Prime power is defined as the main Spacecraft bus power feeding the PM.

[2] The Propulsion Module shall connect to both A and 7B power buses as shown in Figure 3.

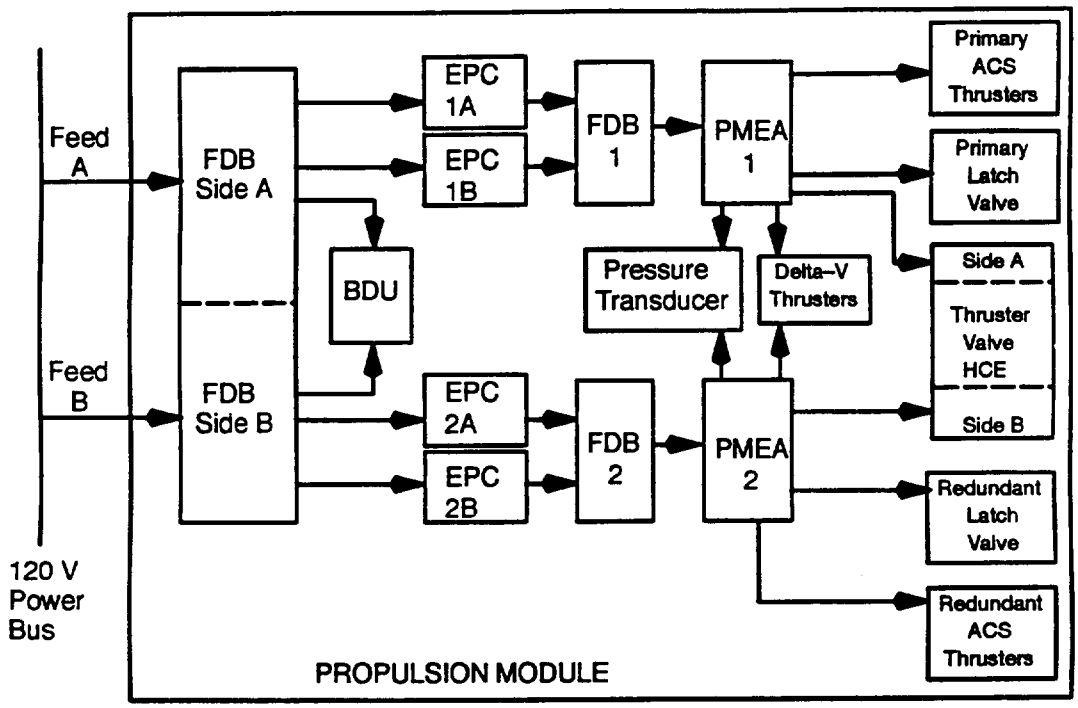

Figure 3. Electrical Power Interface Diagram

3.1.2.1.1.1 120V FDB Interface

The 120V fuse distribution box shall receive primary and redundant 120V power and return feeds from the Power Distribution Unit. The FDB shall maintain electrical isolation between the redundant feeds. The FDB shall fuse and distribute 120V power to the propulsion module BDU and EPCs.

3.1.2.1.1.2 EPC Interface

The Electrical Power conditioners shall receive primary and redundant 120V fused power and return feeds from the 120V FDBs. Electrical isolation shall be maintained between the redundant feeds. The EPCs shall convert 120V to regulated 28V outputs. EPC outputs shall interface directly to the 28V FDBs before being distributed to propulsion module components.

3.1.2.1.1.3 28V FDB Interface

The 28V fuse distribution boxes shall receive 28V power and return feeds from the EPCs. The FDBs shall provide fused 28V power to propulsion module components. The FDBs shall maintain electrical isolation between the side A and side B 28V power and return feeds.

3.1.2.1.1.4 PMEA Output Interfaces

3.1.2.1.1.4.1 REA Solenoids

The PMEA shall provide variable pulse width control of 28V power switching to REA solenoids. Three unique commands and a separation switch enable shall be required to apply 28V to a solenoid (The separation switch acknowledges separation of the spacecraft from the launch vehicle). Power shall be switched independently to each REA.

3.1.2.1.1.4.2 REA Catalyst Bed Heaters

The PMEA shall switch 28V power to catalyst bed heaters. Heaters shall be enabled/disabled by one command only. The separation switch shall not preclude application of power to catalyst bed heaters.

3.1.2.1.1.4.3 Latch Valves

The PMEA shall provide pulsed 28V power to the latch valve open and close coils. Three unique commands shall be required to pulse power to a single coil. Latch valve coils shall be uniquely commandable.

3.1.2.1.1.4.4 Pressure Transducer

The PMEA shall provide switched 28V power to the pressure transducer.

3.1.2.1.1.4.5 HCEs

The PMEA shall provide a fused 28V power feed and a dedicated return feed for each HCE assembly. Each 28V power feed shall be capable of being enabled and disabled upon command.

3.1.2.1.1.4.6 Heaters

Heaters for the tank, lines, latch valves, and all electrical boxes will be thermostatically controlled. Each heater element will be connected in series with two thermostats. Each heater circuit will receive a 28V power feed and a dedicated return feed from the PMEA. The PMEA shall be capable of enabling and disabling 28V power to each circuit upon command. Enable commands may affect multiple heater circuits.

The PMEA shall provide the capability to bypass the propellant tank heater thermostats and provide a 28V power feed and return feed directly to the propellant tank heater element.

3.1.2.2 Data Interfaces

The PM interface to the spacecraft command and telemetry bus will be a redundant MIL–STD–1553 bus. The Bus Data Unit (BDU) will interface to both the A and B spacecraft command and telemetry buses, and shall distribute commands to and collect data from components located on the propulsion

module. BDU performance shall be as specified in the BDU Performance Specification, PS20008568. Spacecraft command and telemetry bus interfaces shall meet the requirements specified in IS20008501, General Interface Specification and shall have the following characteristics:

a. Connection Type: Twisted shielded pair transformer coupled

b. Signal Type: MIL–STD1553B

The PM shall support Spacecraft status checks during prelaunch integration and checkout by providing command and housekeeping telemetry capabilities to the Spacecraft and by executing sample command loads.

3.1.2.2.1 Command Inputs

The format, function, and timing of commands for all PM components are listed in an appendix of the respective performance specification of each component.

3.1.2.2.2 Telemetry Outputs

The type, function, and timing of telemetry words for all PM components are listed in an appendix of the respective performance specification of each component.

3.1.2.2.3 Attitude Control Electronics (ACE) Interface

The ACE interface shall be as shown in Figure 4. A total of four differential command lines; enable, clock, data, and safe mode; will be provided by the ACE to each PMEA. These interfaces shall comply with section 3.3.2.8.1 of the GIS, IS20008501.

3.1.2.2.3.1 ACE Thruster Firing Commands

During safe mode only, the PM shall execute ACE thruster fire command messages transmitted to the PMEA over the serial interface. The PM shall execute an ACE command message consisting of a 16–bit word for each thruster of the on–line set (primary or redundant) that will be fired.

3.1.2.2.4 Internal Signal Interfaces

Each propulsion module component shall comply with the noise requirements of section 3.1.3 of the GIS, IS20008501.

3.1.2.2.4.1 PMEA/BDU Interface

3.1.2.2.4.1.1 Thruster Fire Commands

The BDU shall transmit thruster fire command messages to the PMEA in 1024 msec intervals. Thrusters that will not be fired shall not receive commands. The pulse duration for each selected thruster shall be individually commandable over the range of 16 to 1024 msec with a granularity of

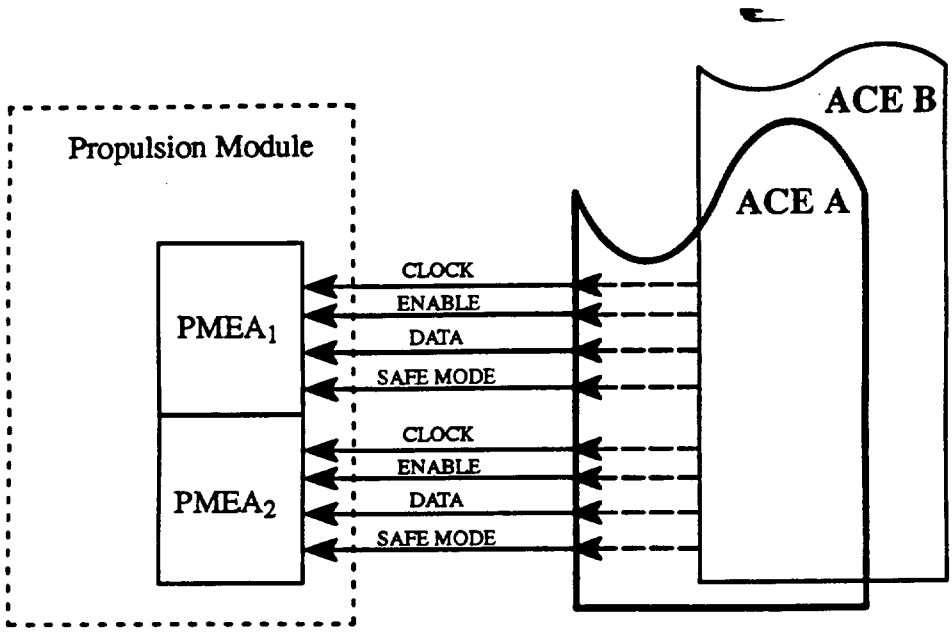

Figure 4. ACE to PMEA Interface

8 msec. The PMEA shall verify the integrity of command messages. If an invalid command is detected, the PMEA shall flag the error in status telemetry and shall ignore all commands received during that command interval.

The BDU shall provide a discrete Thruster Control Execute (TCE) pulse during each 1024 msec interval. If command integrity is verified, the PMEA shall execute the command message upon receipt of the TCE pulse.

The PMEA shall recognize the passage of the spacecraft into safe mode. During safe mode, the PMEA shall ignore BDU thruster commands and accept ACE thruster commands. When safe mode is cancelled, the PMEA shall re–enable the thruster command path from the BDU and lock out commands from the ACE. The BDU and ACE I/O circuit characteristics are described in the General Interface Specification IS20008501.

During thruster maneuvers or sasfing, the BDU or ACE shall transmit a fire command message to the PMEA over a serial interface. Fire command messages shall consist of a 16–bit format word for each thruster of the on–line set (primary or redundant) that will be fired. Each 16–bit word containing the following information:

> **Thruster Identifier**: This field identifies the thruster to be fired. Thrusters are paired such that the ACE or the BDU is not required to ascertain which set (primary or redundant) is enabled.
>
> **Firing Duration**: This field specifies the firing duration as a binary number ranging from 16 to 1024 milliseconds with an 8 millisecond granularity.

Last Word Indicator: This field shall indicate the last word of the message.

Parity: This field shall facilitate parity checking of the word.

3.1.2.2.4.1.2 Serial Telemetry Interface

The PMEA shall transmit serial telemetry to the BDU regarding PMEA logic and relay status. Transmission will occur on standard serial interfaces as specified in the GIS, IS20008501.

3.1.2.2.4.2 Discrete Telemetry Interface

Propulsion module components shall generate health, status, performance, and command response telemetry data to the BDU for inclusion in housekeeping telemetry streams. The discrete telemetry interface shall comply with sections 3.3.2.10.2 and 3.3.2.11.1 of the GIS, IS20008501. Signal types shall be as specified in the GIS, IS20008501.

3.1.2.3 Mechanical Interfaces

The PM shall abide by the requirements of SMS Performance Specification, PS20001415, regarding coordinate systems, physical characteristics, design, construction, mounting, alignment, characteristics, structural criteria, and tooling. Physical interfaces between the PM and the spacecraft shall be as defined in the Propulsion Module Assembly Drawing, 20043126G1. The location of attitude control thrusters shall conform to the stayout zones identified in Figure 5 and to the positions and orientations identified in Figure 6. The location of all equipment mounted on the PM shall be such as to not degrade the performance of the Flight Termination System (FTS). Component spacings shall provide adequate clearance for harness runs.

The PM shall be designed such that it can be independently assembled, tested, installed into or removed from the EOS–AM Spacecraft structure without requiring disassembly of thermal control subsystem hardware.

3.1.2.4 Thermal Interfaces

[1] All thermal control hardware (heaters, MLI, etc.) in the Propulsion Module shall meet the thermal control hardware requirements of the GIS, IS20008501, Section 5, Thermal Interfaces,

[2] and as specified in the Thermal Control Subsystem (TCS) Performance Specification, PS20008549.

[3] The PM shall acquire, spread, and reject component heat to the external Spacecraft sink as necessary to maintain the temperature at each component interface to levels below the maximum limits specified in the Temperature Requirements table in Section 5 of the GIS, IS20008501.

[4] The heater control electronics (HCE4), using heaters and thermistors in the PM, shall maintain the temperature at each component interface to levels above the minimum limits specified in the Temperature Requirements table in Section 5 of the GIS, IS20008501.

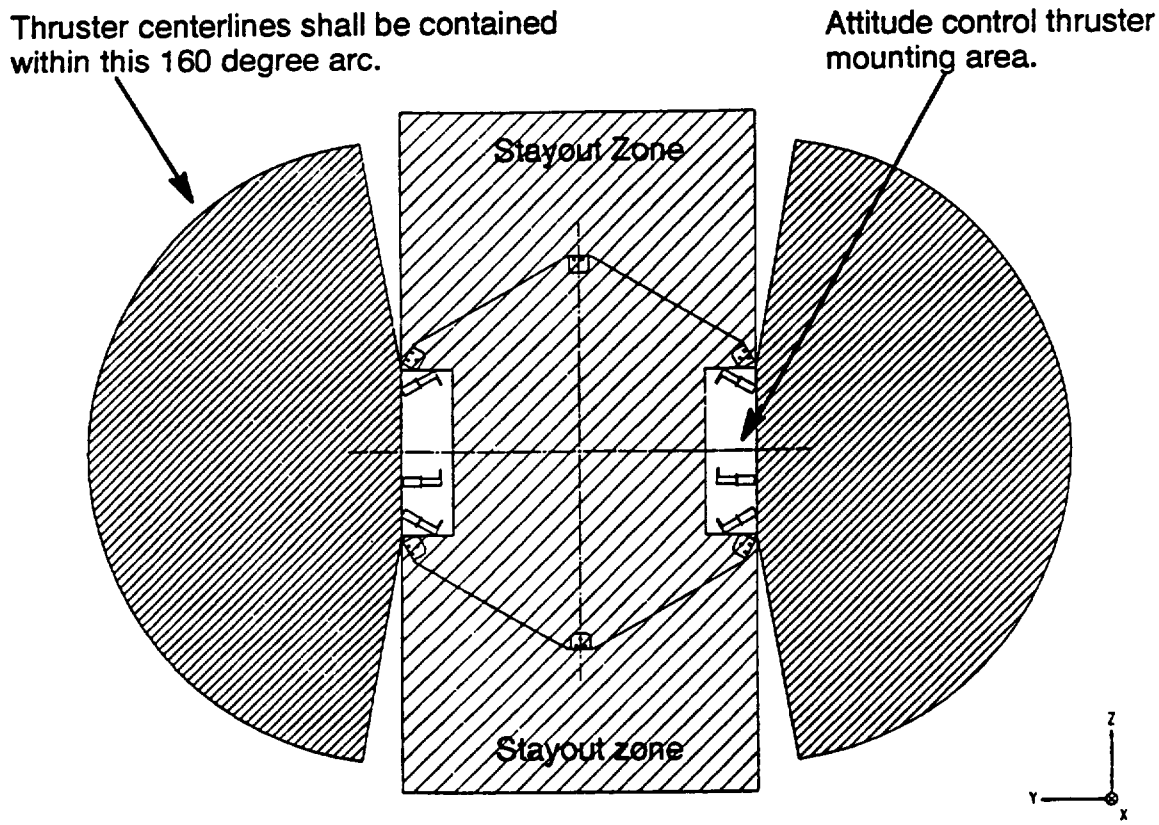

Figure 5. Attitude Control Thruster Stayout Zones

[5] Heat dissipating components shall meet the Component Conductive Interface requirements in the GIS, IS20008501, Section 5.

[6] Temperature sensing assemblies on the PM shall be connected to the BDU for the purpose of tracking thermal performance.

3.1.2.5 Propulsion Subsystem Servicing Interfaces

Propellant and pressurant shall be capable of being loaded, drained, and flushed from the PM using Mechanical Ground Support Equipment (MGSE) carts. Fluids entering the PM shall be filtered to 5 microns absolute before entering the Propulsion Subsystem. Fluid connections between the MGSE and the PM shall be made at fill and drain service valves. After integration, all fill and drain service valves shall be accessible.

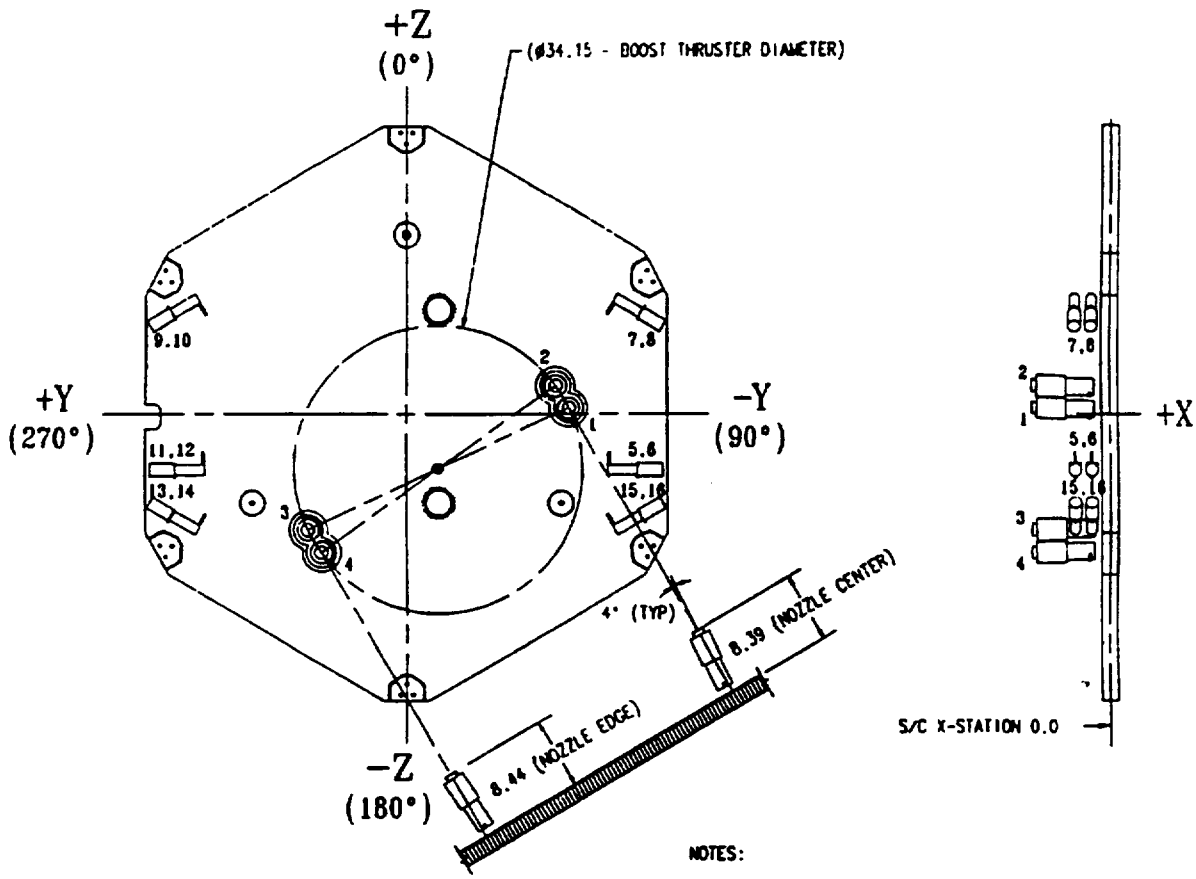

NOTES:

1. REAs 1 THROUGH 4: 5.0 LBF (BOOST PHASE)
   REAs 5 THROUGH 16: 1.0 LBF (ATTITUDE CONTROL)
2. ALL BOOST THRUSTERS ARE CENTERED AROUND AND CANTED 4° TOWARD THE SPACECRAFT BEGINNING-OF-LIFE (BOL) C.G.

THRUSTER NO.	LOCATION OF INTERSECTION OF THRUST VECTOR AND NOZZLE EXIT PLANE			CANT ANGLE	THRUST VECTOR DIRECTION COSINES		
	X	Y	Z	(deg)	X	Y	Z
1	-9.39	-19.25	0.76	4.0	0.99756	0.06024	-0.03518
2	-9.39	-17.70	3.41	4.0	0.99756	0.06024	-0.03518
3	-9.39	11.67	-13.74	4.0	0.99756	-0.06024	0.03518
4	-9.39	10.12	-16.39	4.0	0.99756	-0.06024	0.03518
5	-4.25	-30.55	-6.66	-180.0	0.0	1.0	0.0
7	-4.25	-30.55	10.50	-150.0	0.0	0.86603	0.5
9	-4.25	30.55	10.50	-30.0	0.0	-0.86603	0.5
11	-4.25	30.55	-6.66	0.0	0.0	-1.0	0.0
13	-4.25	30.55	-10.50	30.0	0.0	-0.86603	-0.5
15	-4.25	-30.55	-10.50	150.0	0.0	0.86603	-0.5
6	-2.25	-30.55	-6.66	-180.0	0.0	1.0	0.0
8	-2.25	-30.55	10.50	-150.0	0.0	0.86603	0.5
10	-2.25	30.55	10.50	-30.0	0.0	-0.86603	0.5
12	-2.25	30.55	-6.66	0.0	0.0	-1.0	0.0
14	-2.25	30.55	-10.50	30.0	0.0	-0.86603	-0.5
16	-2.25	-30.55	-10.50	150.0	0.0	0.86603	-0.5

Figure 6. Thruster Locations, Orientations, and Numbering

3.1.3 Major Component List

The major components of the Propulsion Module shall be as listed in Table II.

Table II. Propulsion Module Major Component List

Subsystem	Component	Part Number
CD&H	Bus Data Unit (BDU)	20008568
EPS	Fuse Distribution Board (FDB)	20008694
	Electrical Power Conditioner (EPC)	20008597G3
PROPS	Propulsion Module Electronics Assembly (PMEA)	20008619
	Propellant Tank	20001402
	Rocket Engine Assembly, 1.0 lb_f	2591847
	22N Rocket Engine Assembly (5.0 lb_f)	3268395
	Latching Valve, Reaction Control Subsystem	2629344
	Propellant Filter, Series 5000 Dual Mode Propulsion System	2633638
	Propellant and Pressurant Fill and Drain Valve	2308187
	Pressure Transducer	2308188
TCS	Heater Control Electronics (HCE) (Type–4)	20008550
EAS	Propulsion Module Power Harness	20038262
	Propulsion Module CD&H Harness	20038263
SMS	Rear Bulkhead Assembly	20043133
	Propellant Tank Adapter Ring	20043136

3.2 Characteristics

3.2.1 Performance

3.2.1.1 Propulsion Subsystem

3.2.1.1.1 Control Requirements

3.2.1.1.1.1 Controllability

Attitude control thrusters shall be capable of generating control torques about each set of control axes nominally aligned with the Spacecraft principal axes. Cross coupling from the intended axis to either or both of the other axes shall be less than 10% due to all effects including, but necessarily limited to, CG variation and uncertainty, thruster misalignment, and thrust unbalance. The attitude control thrusters shall produce 0.02 lbf net propulsive thrust along the Spacecraft velocity vector (X axis).

3.2.1.1.1.2 Torque Capability

The attitude control torque requirements shall be as defined by the following:

Roll	>1 ft-lbs
Pitch	>6 ft-lbs
Yaw	>7 ft-lbs

Control requirements for delta-V operations are driven by propulsion induced disturbances. A control margin of greater than 2:1 shall be maintained with respect to propulsion induced disturbances, with any single failure.

3.2.1.1.1.3 Minimum Torque Impulse

The thrusters used for attitude control shall provide at least a 2:1 margin over RSS worst–case disturbances and at least a 1.1:1 margin over absolute worst case disturbance.

3.2.1.2 Structure Assembly

The structure assembly will meet the performance requirements outlined in this section.

3.2.1.2.1 Loads

3.2.1.2.1.1 Design

The structure shall be designed to support the full weight of the Propulsion Module and the propellants during all phases of operation, transportation, and testing in either the horizontal or vertical position.

3.2.1.2.1.2 Acceleration

The Propulsion Module structure and its components shall be designed to the quasi-static accelerations defined in the appendix to the Structures and Mechanisms Subsystem Performance Specification, PS20001415.

3.2.1.2.1.3 Margin of Safety

The structure shall maintain positive margins of safety through all phases of operation. The factors of safety to be used are in the General Interface Specification IS20008501.

3.2.1.2.1.4 Operational Loads

The Propulsion Module structure shall be designed to withstand the launch and operational loads induced by the following components:

a. Pyro shock from the launch vehicle separation system

b. Loads induced by the Spacecraft core structure at the Spacecraft interface.

3.2.1.2.1.5 Acoustic Loads

The Propulsion Module shall withstand environmental acoustic loading as specified in the GIS, IS20008501.

3.2.1.2.1.6 Structure Thermal Stability

The Propulsion Module structure base panel shall be designed with a coefficient of thermal expansion (CTE) not to exceed 5.6E-6 in/in/C in the radial direction. In lieu of controlling the base panel CTE if the subcontractor can achieve equivalent thermal stability by way of thermal control or show by analysis that the base panel thermal stability does not degrade Spacecraft pointing, waiver of this requirement will be considered.

3.2.1.2.1.7 Load Distribution

The structure shall facilitate load sharing to the Spacecraft interface in the following manner under conditions of a one G thrust loading:

[1] Total load at each Spacecraft "Y" longeron interface shall not exceed 15% of the total mass of the Propulsion Module. The "Y" longerons are the four not on the "Z" coordinate axis.

[2] In addition, the Propulsion Module structure shall be designed to support a radial load of 500 lbs at each Spacecraft interface point in combination with the design loads specified in 3.2.1.2.1.2.

3.2.1.3 Electrical Assembly Performance

The Electrical Assembly shall provide the appropriate control and signal conditioning functions to allow communication with the BDU.

Additionally, the Electrical Assembly shall provide the means of power conversion and regulation to those Propulsion Module subsystems or units requiring operating voltages of 28 V DC and 120 V DC. The converter shall be capable of operating at normal atmospheric pressure during launch, ascent, and on–orbit.

The Propulsion Module shall generate health, status, performance, and command response telemetry data to the BDU for inclusion in housekeeping telemetry streams. This data shall be sufficient to allow ground controllers to assess the operational state of the Propulsion Module, monitor critical functions, and aid in fault detection and correction. It shall be used to log the utilization of Propulsion Module resources, the configuration/reconfiguration of the subsystem, and other significant events.

3.2.1.3.1 Propulsion Module Electronic Assembly (PMEA)

The PMEA shall provide signal conditioning and control functions required to drive the monopropellant thrusters, heater circuits, and latching valves from standard interface circuits provided by the BDU and the serial input of the ACE interface. The PMEA shall also provide the

signal conditioning required to convert output level signals from temperature sensors and pressure transducers associated with the Propulsion Subsystem into standard analog voltage signals compatible with the BDU interface circuits.

3.2.1.4 Electrical Accommodations Assembly

3.2.1.4.1 General

The Propulsion Module shall accept a power bus, redundant MIL-STD-1553B busses for the BDU, and a RS-422 ACE serial interface from the Spacecraft. These busses are to be used in power, command, control, and monitoring functions of the Propulsion Module.

The electrical accommodation assembly shall provide a grounding scheme in compliance with that described in the EOS–AM Spacecraft EMC Control Plan 20005869.

3.2.1.4.2 Main Power Busses

3.2.1.4.2.1 Voltage Regulation and Transients

All components, subsystems, and units of the Propulsion Module shall perform correctly when subjected to voltage regulation or ripple as specified in General Interface Specification IS20008501. Filtering or other means shall be provided to maintain emissions or conducted back to the Spacecraft within the limits of the GIS, IS20008501 and the EMI/EMC Control Plan 20005869.

3.2.1.4.2.2 Main Bus Current

The EPS feed to the Propulsion Module will be sized for a maximum of 5 amperes DC steady state load current. The PM shall be designed to meet maximum power transients as specified in the GIS, IS20008501.

3.2.1.4.2.3 Main Bus Switching and Interruption

Fault interruption of the Propulsion Module power feeds shall be provided by fuses in the Propulsion Module.

3.2.1.4.2.4 Main Bus Protection

The Propulsion Module shall be configured so that no single failure shall cause a fault to be applied to both main bus feeds.

3.2.1.4.3 C&DH Subsystem Busses

The C&DH Subsystem of the Spacecraft will provide a redundant (A and B bus) MIL-STD-1553B bus for direct interface with the BDU.

3.2.1.4.4 Fusing

Fuses shall be used for protection against Propulsion Module load faults and shall be sized and derated in accordance with IS20008501, General Interface Specification.

3.2.1.4.4.1 Shorting and Fault Protection

No single component failure (with the exception of a harness wire) shall cause a non-removable short circuit to be applied to either or both main power busses. Individual fuses shall be provided for BDU side A, BDU side B, PMEA side A, and PMEA side B.

3.2.2 Physical Characteristics

3.2.2.1 Mass

The total dry mass of the PM shall not exceed 370 lb_m. The allocation of mass by component in the Propulsion Module is given in Table III.

Table III. PM Component Size, Mass, and Power Allocations

Component	Qty	Num Oper	State	Size LxWxH LxOD (Inches)	Total Mass (lbs.)	Ave. Power Consumption (Science Mode) (Watts)	Ave. Thermal Dissipation (Science Mode) (Watts)
Rear Bulkhead	1	–	n/a	62.1x68.5x2.0	75.5	–	–
Tank Support Ring	1	–	n/a	1.0x42.9 OD	10.4	–	–
Struts	12	–	n/a	26.3x1.5 OD	26.0	–	–
Brackets & Misc.	1	–	n/a	–	26.2	–	–
Propellant Tank	1	–	n/a	33.8x40.6 OD	77.5	–	–
LPres Service Valves	2	–	n/a	2.9x1.9 OD	0.6	–	–
Latch Valves	2	–	OFF	4.7x1.8x3.2	1.5	0.0	0.0
Propellant Filters	2	–	n/a	4.3x1.4 OD	0.8	–	–
LPres Transducer	1	1	ON	4.8x1.25 OD	0.6	0.5	0.5
Manifold Tubing	1	–	n/a	–	3.3	–	–
5 lbf Thrusters	4	–	OFF	7.5x2.5 OD	5.8	0.0	0.0
1 lbf Thrusters	12	–	OFF	6.6x1.5 OD	7.3	0.0	0.0
PMEAs	2	0	OFF	8.8x9.3x8.5	31.4	0.0	0.0
BDU–Instr. (PROP)	1	1	ON	8.9x9.1x10.3	19.6	8.1	7.5
EPCs (1)	4	3	ON	6.5x7.3x1.5	8.8	9.7	8.8
FDBs	3	3	ON	8x4x3	5.6	1.1	2.0
PM Power Harness	1	1	ON	–	19.6	0.3	0.6

Table III. PM Component Size, Mass, and Power Allocations (Continued)

Component	Qty	Num Oper	State	Size LxWxH LxOD (Inches)	Total Mass (lbs.)	Ave. Power Consumption (Science Mode) (Watts)	Ave. Thermal Dissipation (Science Mode) (Watts)
PM CD&H Harness	1	–	n/a	–	16.7	0.0	0.0
HCEs (Type 4)	4	4	ON	2.8x5.0x6.8	5.7	8.8	8.0
MLI	26	–	n/a	–	7.7	–	–
Misc. Therm. Equip. (1)	1	–	ON	–	7.1	5.0	22.7
TOTALS					357.7	53.5	50.1
Undistributed Allocation					7.3	6.5	

Notes: (1) End–of–life average power consumption and thermal dissipation values used, beginning–of–life peak thermal dissipations assumed.

3.2.2.2 Power Consumption

The allocation of power consumption dissipation by component in the PM is given in Table III. The peak power drawn by the Propulsion Module in any operating mode shall not exceed 260.0 watts and the on–orbit average power drawn in science mode shall not exceed 80 watts. The power consumption for the PM for the different EOS–AM Spacecraft operating modes shall not exceed the values specified in Table IV.

Table IV. DC Power Consumption

EOS Operating Modes	Propulsion Module Power Consumption, W
Ground Test	60.0
Survival	120.0
Safe	120.0
Standby	120.0
Delta–V	260.0
Science	80.0

3.2.2.2.1 Thermal Dissipation

The allocation of thermal dissipation by component in the PM is given in Table III. The peak thermal dissipation from the Propulsion Module shall not exceed 260.0 watts and the on–orbit average thermal dissipation in science mode shall not exceed 60.0 watts. The thermal dissipation for the PM for the different EOS–AM Spacecraft operating modes shall not exceed the values specified in Table V.

Table V. Thermal Dissipation

EOS Operating Modes	Propulsion Module Peak Thermal Dissipation, W
Ground Test	60.0
Survival	120.0
Safe	120.0
Standby	120.0
Delta–V	260.0
Science	60.0

3.2.2.3 Dimension

All dimensions shall be in compliance with the stayout zones and design volume defined by Figure 8.

3.2.2.4 Transport and Storage

[1] Accommodations for tie-downs, pallets, packaging, and other handling fixtures necessary for transport and storage of the equipment module shall be made to ease handling by and interaction with ground support equipment (GSE).

[2] The proper orientation for placing items in storage or transportation containers shall be obvious by design or marking.

[3] The PM shall provide lift points capable of supporting the PM and any accompanying GSE under handling loads of 2g vertical (per MIL–STD–1367A).

[4] When four or more lift points are provided, 3 shall be capable of lifting the entire load.

3.2.2.5 Integration and Test

[1] PM design shall ensure that access to the interface connector is sufficient to preclude the need for blind–mate connectors during installation of the PM on the Spacecraft Core.

[2] During testing, all PM components shall be maintained within operational temperature limits as specified in the Temperature Requirements table in Section 5 of the GIS, IS20008501, by means of forced air convection.

[3] Items which for safety reasons may require rapid pre-launch maintenance shall be readily accessible.

[4] Items requiring frequent access during I&T or other prelaunch operations shall be accessible during I&T.

3.2.2.5.1 Test Interfaces

Test connectors shall be provided on the propulsion module to facilitate ground test and checkout. The test connectors shall carry power and signals as appropriate for the test functions performed. Tests shall be capable of being performed without access to spacecraft power or signals. After integration, all electrical interface connectors and test ports shall be accessible.

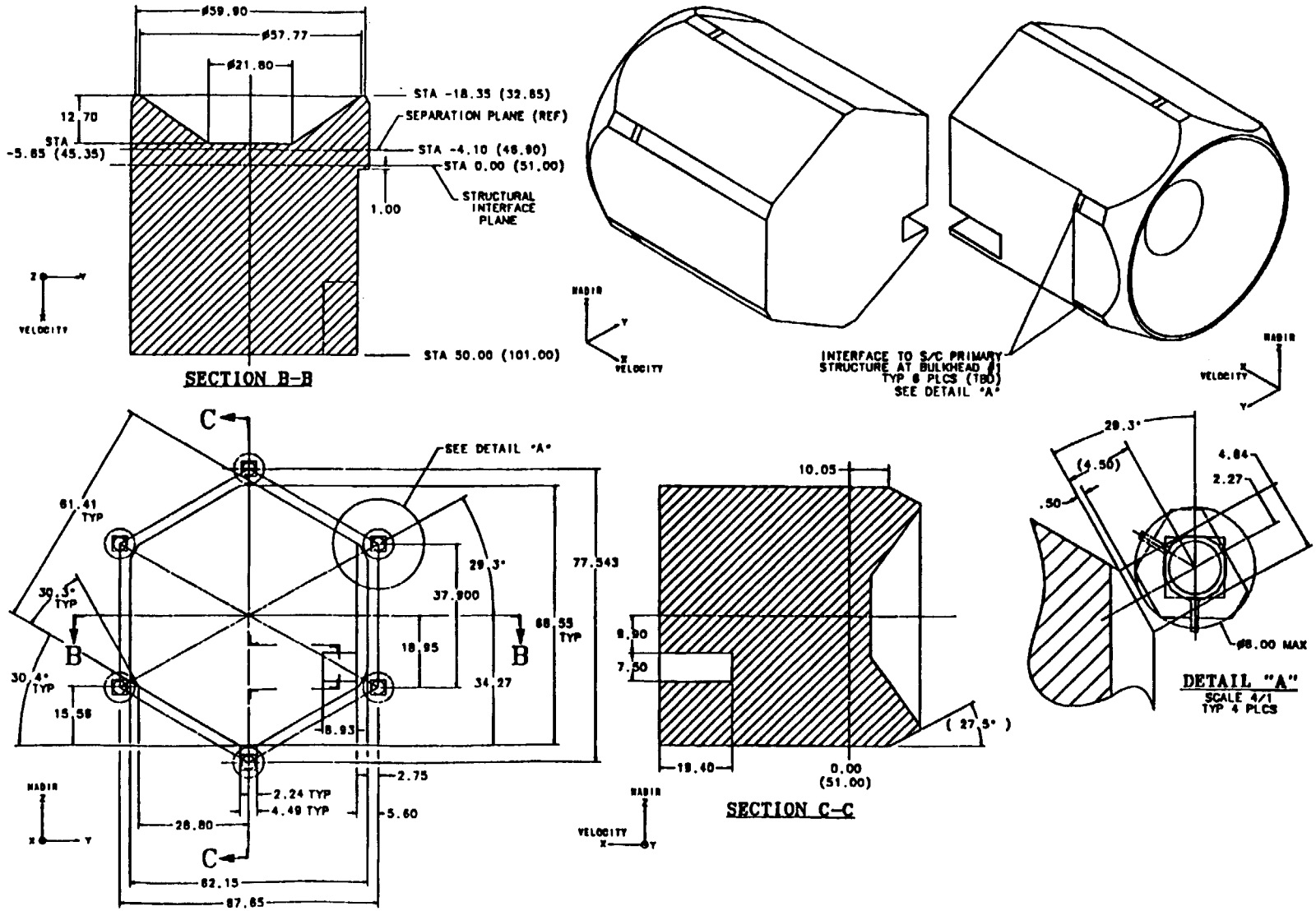

Figure 7. Propulsion Module Design Volume

PS20008618
05 August 1993

The PM shall support prelaunch integration and checkout of the spacecraft by incorporating test interfaces for external stimuli. Test points shall provide signal and power interfaces as necessary for verification during the absence of spacecraft interfaces. Test points shall also accommodate verification of functions that cannot be tested via spacecraft interfaces.

3.2.2.6 Layout

[1] Fuses for the PM shall be located, to the extent practical, such that it is possible to replace or view any fuse without requiring any disassembly of the PM.

[2] The PM layouts shall, to the extent practical, ensure that any component contained within the Major Assembly can be removed without having to remove any other component.

[3] Component spacings shall provide adequate clearance for harness runs.

[4] All flight equipment which would require maintenance during a storage period of 5 years or less shall be accessible when the Spacecraft is in its stored configuration.

[5] All Spacecraft components which are fragile or otherwise susceptible to damage shall, where practical, be guarded or located so as to reduce this susceptibility.

[6] Sensitive adjustment controls and actuators shall be located or guarded to protect them from inadvertent perturbation.

[7] Component labeling shall be visible when the component is installed in the parent assembly or stowed. Labels shall be installed such that they are readable by the unaided human eye.

3.2.2.7 Configuration

[1] The PM shall conform to the assembly drawing 20001411G1. These drawings shall define the following parameters:

a. Physical size

b. Mounting Requirements and interfaces

c. External finishes

d. Method of identification.

3.2.2.8 Natural Frequency

[1] The natural frequency of the PM shall be no less than the level specified in the appendix to the Structures and Mechanisms Subsystem Performance Specification, PS20001415.

3.2.2.9 Center of Gravity (CG)

Propulsion Module center of gravity when fully loaded with propellant shall be constrained as follows:

a. Radial CG offset from base panel geometric center shall not exceed 2.0 inches.

b. "X" CG offset from the spacecraft interface plane shall not exceed 30.0 inches.

3.2.2.9.1 Center of Gravity (CG) Shift

Spacecraft CG shifts resulting from propellant movement and depletion within the propulsion module shall be constrained as follows:

a. Propellant depletion Spacecraft CG shift shall not exceed 6.5 inches in +X and 0.75 inches in the radial Y–Z plane.

b. Propellant repositioning shall not cause a Spacecraft CG shift of more than 0.6 inches in ±X and 0.6 inches in the radial Y–Z plane.

3.2.3 Reliability

The probability of mission success (Ps) is allocated to the individual subsystems and their components. This information may be found in the applicable Performance specifications.

3.2.4 Durability

[1] The PM shall operate as specified herein for at least a five–year operational life.

3.2.5 Maintainability

[1] The PM shall be designed so that no regular maintenance will be required.

[2] Removable dust covers or other protective devices shall be provided over electrical connectors.

[3] The PM shall be designed such that it shall be removable during system integration and test to facilitate rework.

3.2.6 Environmental Conditions

3.2.6.1 General

[1] The PM shall be capable of meeting all performance requirements when operating in Spacecraft bay 1.

[2] The PM shall be capable of meeting the requirements defined in this document after exposure to the handling, transportation, and launch environments defined in the GIS, IS20008501 Section 6

[3] and to the test environments defined in the Verification Specification (VS), PS20005404.

[4] The PM shall be capable of meeting the requirements defined in this document during exposure to the mission orbit environment specified in the GIS, IS20008501 Section 6.

[5] The PM shall comply with the requirements of the Contamination Control Plan, PN20001412.

[6] The PM shall remain undamaged during and following exposure to sine vibration tests defined in the appendix to the Structures and Mechanisms Subsystem Performance Specification, PS20001415.

[7] The PM structure shall ensure that no component internal to the module experiences accelerations greater than 1.25 times those defined in the Predicted Limit Loads Figure of the GIS, IS20008501, when the module experiences the test levels defined above.

3.2.7 Transportability

[1] The PM shall be capable of being transported by surface vehicle or aircraft.

[2] The transporting environment shall be controlled so as to be less severe than the specified operating environment.

3.3 Design and Construction

[1] Its design shall be such that it can be independently assembled, tested, and attached to or detached from the EOS–AM Spacecraft structure.

[2] The PM design shall preclude improper installation to the Spacecraft, where practical.

[3] All electrical connectors shall be selected, sized, keyed, and/or marked such that incorrect attachment to the mating connector is prevented.

[4] All connectors shall attach such that the connectors cannot be inadvertently unlocked during ground operations.

[5] The PM design shall comply with the Design and Construction requirements specified in the GIS, IS20008501, for General requirements, Identification and Marking except for the Content paragraph, Finishes, Venting, Interchangeability, and Drawing Terms and Tolerances.

3.3.1 Materials, Processes, and Parts

[1] All materials, parts, and processes used in the design and construction of the PM shall be selected and controlled in accordance with the requirements for Tooling in section 4 of the GIS, IS20008501.

3.3.2 Electric Fields

[1] Components shall meet the electric field emissions requirements in the Equipment Radiated Emissions (RE02, RE01/RE04) section of the Equipment EMI Requirements in the EMC Control Plan, PN20005869.

[2] Components shall meet the requirements of the Radiated Susceptibility (RS03) Electric Fields section and the

[3] Radiated Susceptibility On–Orbit Environment section of the Equipment EMI Requirements in the EMC Control Plan, PN20005869.

3.3.3 Magnetic Fields

[1] Components shall meet the magnetic field emission and

[2] magnetic properties requirements in the Equipment Radiated Emissions and Equipment Radiated Properties sections respectively of the Equipment EMI Requirements in the EMC Control Plan, PN20005869.

[3] Components shall meet the requirements of the Radiated Susceptibility (RS01) Magnetic Fields section of the Equipment EMI Requirements in the EMC Control Plan, PN20005869.

3.3.4 Nameplates and Product Marking

[1] The PM shall be marked for identification in accordance with the Identification Marking Standard, S32534, Rev E, and ICD 20001411.

Conspicuous markings or labels shall be affixed to PM components. The identification shall contain, as a minimum, the following:

a. Astro Space Part Number

b. "Propulsion Module"

c. Revision Level

d. Date of Manufacture

e. Contract Number

[1] Applicable date-sensitive information shall also be identified.

[2] Hardware or equipment which is not suitable for use in flight, and which could be accidentally substituted for flight or flight spares hardware, shall be plainly marked and identified to indicate this status.

[3] All test points, adjustment devices, and alignment points shall be labeled for positive identification.

[4] Wires and cables for hardware shall not be identified by hot stamping directly onto primary or secondary (shield) insulation.

[5] The proper orientation for placing items in storage or transportation containers shall be obvious by design or marking.

3.3.5 Workmanship

[1] The electrical design of the PM shall be in accordance with the design requirements specified in NHB 5300.4 (3A-1, 3G through 3K).

3.3.6 Safety

[1] The design shall meet the factors of safety presented in the mechanical section of IS20008501.

[2] Where practical, hazards shall be eliminated or removed through design measures.

[3] Hazards which cannot be eliminated or removed shall, where practical, be prevented through incorporation and use of safety devices or features.

[4] Remaining hazards shall be controlled using warning devices and/or special procedures.

[5] Automated detection and safing of hazards which may cause personnel injury or loss of the Spacecraft shall be independent of those subsystems being monitored.

[6] Where practical, the detection and safing of lesser hazards shall also follow this practice.

[7] Design decisions shall accommodate compliance with safety requirements specified in this document before accommodating any other considerations (e.g., cost, schedule, performance).

3.3.6.1 Liquid and Gas Hazards

The PM design shall preclude hazards due to the release of liquids or gases during integration, test and propellant loading operations. All hazardous operations shall be conducted in accordance with WSMCR 127–1.

3.3.7 Human Performance/Human Engineering

[1] The PM shall comply with the human engineering criteria of MIL-STD-1472.

3.4 Documentation

Documentation shall be in accordance with the Data Requirements list of the EOS-AM Spacecraft Statement of Work (SOW), contract number NAS5-32500.

3.4.1 Specifications

All parent and component specifications associated with this specification are shown in the EOS–AM Spacecraft Specification Tree, 20008536.

3.4.2 Drawings

[1] The PM shall be defined by prepared drawings. Drawing 20043126G1, Propulsion Module Assembly, shall define and control the physical parameters of the PM,

[2] and drawing 20038247 shall describe the PM harness.

3.4.3 Test Plans and Procedures

[1] Detailed qualification and acceptance test plans and procedures shall be prepared.

3.5 Precedence

In the event of conflicting requirements between the documents referenced herein and the content of this document, the following descending order of precedence shall be used in resolution of the conflict:

a. Requirements Document for the EOS–AM Spacecraft (RD)

b. Performance Assurance Requirements for the EOS Observatories (PAR)

c. Unique Instrument Interface Documents

d. The General Instrument Interface Specification (GIIS)

e. Contract End Item (CEI) Specification

f. External Interface Control Documents(ICD's) (e.g., EOS to Launch Vehicle, EOS to TDRSS, etc.)

g. Subsystem and Major Assembly Specifications

h. Component Specifications

(This page intentionally left blank.)

4 QUALITY ASSURANCE PROVISIONS

This section outlines the requirements and structure of a quality assurance program for the propulsion module. The purpose of the program is to demonstrate the design of the propulsion module and its components meets the performance requirements, has been manufactured properly, and will operate as designed in association with all other EOS–AM Spacecraft interfaces. The Performance Assurance Implementation Plan (PAIP), PN20005397, documents the overall quality assurance approach for the EOS–AM Spacecraft. The specifics of the performance verification process are documented in the Verification Plan, PN20005404.

4.1 General

This section delineates the inspections and tests which shall be performed in order to verify the propulsion module conformance to the requirements of Section 3 of this specification. Test methods and measurements shall be compliant with all requirements specified herein.

4.1.1 Responsibility for Tests

Unless otherwise specified herein, or in the Statement of Work, acceptance and protoflight testing shall be performed by Astro Space.

4.1.2 Special Tests and Examinations

Not Applicable

4.1.3 Reliability Test

Not Applicable

4.1.4 Engineering Evaluation and Test

Not Applicable

4.1.5 Protoflight Test

Protoflight tests, combined with the other verification methods listed in the verification matrix, Attachment A (provided under separate cover), shall verify that the flight hardware design meets the technical requirements of Section 3 of this propulsion module specification to assure operational suitability in the defined environments. Protoflight test hardware shall be used for qualification testing and shall be identical in configuration and production processing to flight hardware.

Protoflight tests, where specified, shall consist of qualification level exposure of the first flight article for acceptance level durations (time and/or cycles).

Protoflight tests shall be performed under strict control of environments and test procedures. Adjustments or tuning of protoflight test hardware is not permitted throughout the entire test program. The requirements of Section 3 to be verified prior to, during, or after each environment shall be as specified in PN20008618.

4.1.6 Installation Test and Checkout

Propulsion Module comprehensive testing, shall include continuity checking, interface mating, support equipment compatibility, and documentation verification. The propulsion module integration and test flow is shown in Figure 8.

4.1.6.1 Electrical Integration and Checkout (EIC)

An EIC shall be performed to verify proper input and grounding of power, commands, and signals prior to mating of flight hardware. The EIC shall also verify proper response to power, commands, and signal upon initial integration of flight hardware. The Propulsion Module electrical assembly hardware shall be integrated with the rear bulkhead in the following order:

1. Propulsion Module Harness
2. Fuse and Distribution Boards
3. Bus Data Unit

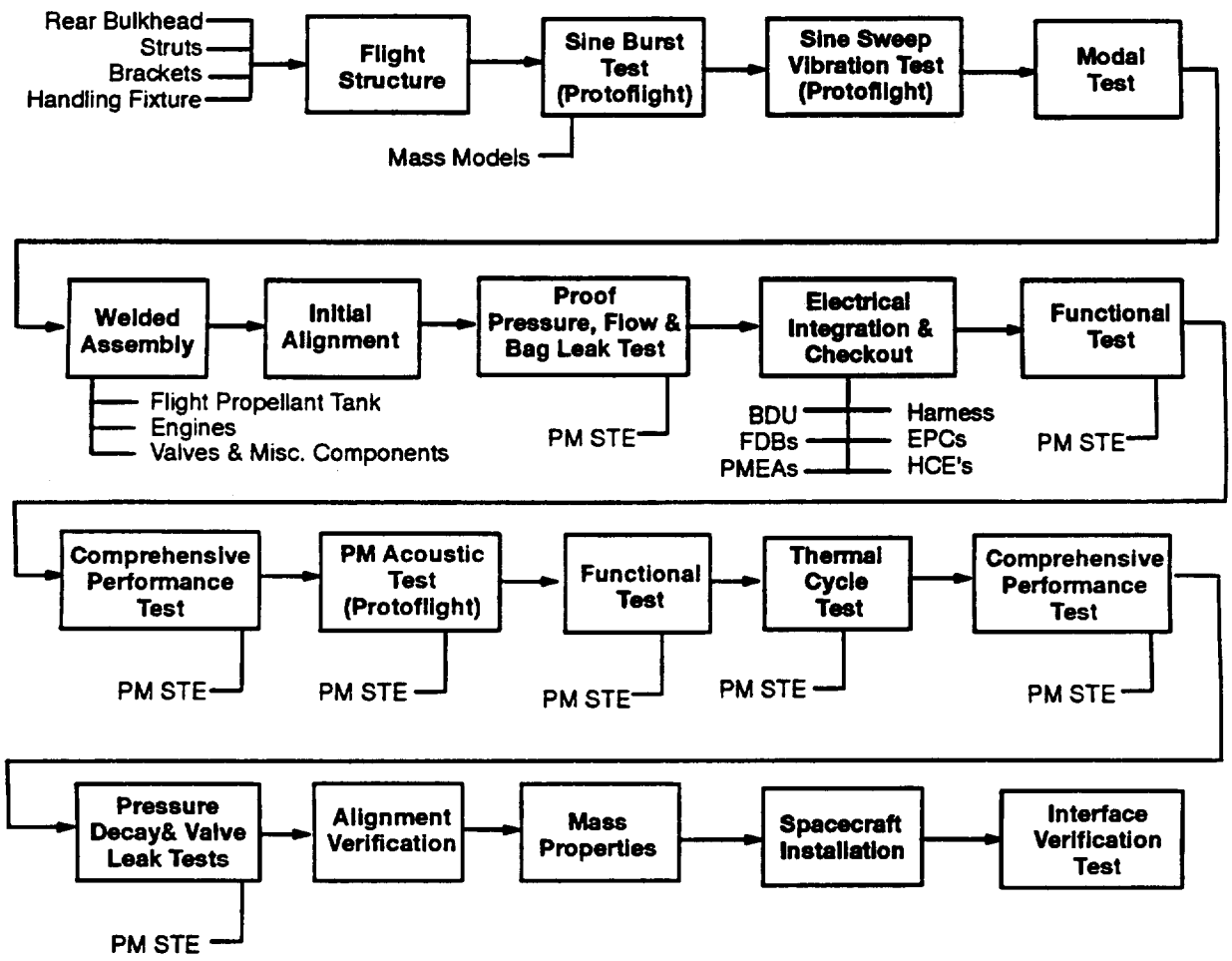

Figure 8. Propulsion Module Integration and Test Flow

4. Electric Power Conditioners
5. Propulsion Module Electronic Assemblies (PMEA)
6. Heater Control Electronics and Heaters.

4.1.6.2 Interface Verification Test (IVT)

An IVT shall be performed to verify the proper Propulsion Module interfaces to the Spacecraft Bus. It verifies all mechanical, power, ground, and signal connectors are properly mated and that there is a signal presence on the proper connectors.

4.1.6.3 Functional Test (FT)

A functional test of the Propulsion Module shall be performed to test command and data paths between components and to exercise prime and redundant hardware.

4.1.6.4 Comprehensive Performance Test (CPT)

A CPT shall be performed to verify that the PM meets the performance requirements in all operational and contingency modes, as well as verifying all command and data paths and all redundant hardware.

4.1.6.5 Interface Verification Test (IVT)

An IVT shall be performed to verify the proper Propulsion Module interfaces to the Spacecraft Bus. It verifies all power, ground, and signal connectors are properly mated and that there is signal presence on the proper connectors.

4.1.7 Formal Test Verification

Formal verification of the performance requirements of the PM are in the Verification Matrix, Attachment A, provided under separate cover. The Verification Matrix identifies the verification method as specified herein and the level at which tests are conducted. The Propulsion Module shall be tested according to the Propulsion Module Test Plan, PN20008618.

4.2 Quality Conformance Inspections

The Propulsion Module shall be exposed to verification conditions which represent those environments encountered throughout the ground phase and flight mission. The environmental conditions and levels of exposure are defined in the Verification Specification for the Earth Observing System (VRD–110), PS20005404, Section 4. There are four methods which may be used individually or in combination to verify each requirements in Section 3. These methods, defined as inspection (I), analysis (A), demonstration (D), and test (T) are defined in the Verification Specification for the Earth Observing System (VRD–110), PS20005404, Section 4.

4.2.1 Method of Verification

4.2.1.1 Inspection

Inspection may be used to verify design and construction requirements, drawing compliance, or specific physical dimensions of the equipment module. Inspection is a method of verification of physical characteristics that determines compliance without the use special laboratory equipment, procedures, test support items, or services. Inspection uses standard methods such as visual gauges, etc., to verify compliance with requirements. Inspection also includes the review of design documents, material lists, code, plans, etc., to verify that requirements have been met.

4.2.1.2 Analysis

Analytical techniques may be used, in lieu of testing, to verify compliance to specified requirements, either alone or in combination with test. The selected techniques may include, typically, system engineering analysis, statistics, qualitative analysis, analog modeling, and computer simulation.

4.2.1.3 Demonstration

Demonstration is a qualitative method of verification that evaluates the properties of the subject equipment by observation. Demonstration is used with or without special test equipment or instrumentation to verify required characteristics such as operational functioning human engineering features, service and access features, transportability, and displayed data.

4.2.1.4 Test

Test is a quantitative method of verification wherein performance requirements are verified by measurement during and after the controlled application of functional and environmental stimuli. These measurements may require the use of laboratory equipment, recorded data, procedures, test support items, or services.

4.2.1.5 Classification of Characteristics

Classification of characteristics as critical, major or minor, shall be as defined in MIL-STD-109.

4.2.1.6 Test Equipment

[1] Existing test equipment shall be used wherever practical.

[2] Where new test equipment is required to test units which are physically or functionally identical or similar, the equipment shall be designed to perform its task(s) on each element of that group, where practical.

4.2.1.6.1 Test Equipment Safety Features

[1] Test equipment shall incorporate any safety interlocks or other safety features necessary to reduce the introduction of safety hazards by the test equipment.

[2] Any safety feature included in any Spacecraft test equipment shall give a visual, auditory, or electronic indication of activation when it is activated.

4.2.1.6.2 Test Equipment Verification

Unless otherwise specified herein, test equipment used to measure PM performance characteristics shall be capable of demonstrating that

a. It will not impose environments on the tested item(s) beyond the levels called for in the Verification Specification, PS20005404, and

b. it is capable of imposing the test levels called for in the Verification Specification, PS20005404.

c. it is capable of meeting all the requirements imposed on it by the Ground Support Equipment Requirements Document, 20001430 (GSERD).

4.2.1.6.3 Test Equipment Calibration

[1] EM Test equipment shall be calibrated in accordance with the Performance Assurance Implementation Plan, 20005397.

(This page intentionally left blank.)

5 PREPARATION FOR DELIVERY

5.1 General

Interior and exterior shipping containers shall be marked in accordance with the identification and marking requirements of the General Interface Specification, IS20008501.

(This page intentionally left blank.)

6 NOTES

6.1 Definitions

None

6.2 Abbreviations and Acronyms

ACE	Attitude Control Electronics
BDU	Bus Data Unit
BOL	Beginning of Life
C	Degrees Celsius
C&DH	Command and Data Handling
C&DHS	Command and Data Handling System
CD&H	Command and Data Handling Subsystem
CDOS	Customer Data Operations Systems
CEI	Contract End Item Specification
CG	Center of Gravity
DOD	Department of Defense
DPWL	Drawings, Part Lists and Wire Lists
EMI/EMC	Electromagnetic Interference/Electromagnetic Compatibility
EAS	Electrical Accommodations Subsystem
EOS	Earth Observing System
EPC	Electric Power Conditioner
EPS	Electrical Power Subsystem
FDB	Fuse Distribution Box
FSE	Flight Support Equipment
FTS	Flight Termination System
g	Gravity Constant
GFE	Government Furnished Equipment
GHB	GSFC Handbook
GHe	Gaseous Helium
GMI	GSFC Management Instruction
GN&C	Guidance, Navigation, and Control

GN&CS	Guidance, Navigation, and Control Subsystem
GSE	Ground Support Equipment
GSFC	Goddard Space Flight Center
ICD	Interface Control Drawing
IRD	Interface Requirements Document
IS	Interface Specification
JSC	Johnson Space Center
KSC	Kennedy Space Center
LSA	Logistics Support Analysis
M&O	Maintenance and Operations
MD	Management Document
MIL	Military
MGSE	Mechanical Ground Support Equipment
MSFC	Marshall Space Flight Center
MEOP	Maximum Expected Operating Pressure
NASA	National Aeronautics and Space Administration
NMI	NASA Management Instruction
NSTS	National Space Transportation System
OPD	Operation Document
PA	Product Assurance Document
PAR	Performance Assurance Requirements
PARA	Paragraph
PDRD	Program Definition and Requirements Document
PER	Pre-Environmental Review
PIP	Payload Integration Procedures
PM	Propulsion Module
PMD	Propellant Management Device
PMEA	Propulsion Module Electronics Assembly
PROPS	Propulsion Subsystem
PS	Performance Specification
REA	Rocket Engine Assembly
REV	Revision

SCCP	Servicing Contamination Control Plan
scc/sec	Standard cubic centimeters per second
SE&I	System Engineering and Integration
SMS	Structures and Mechanisms Subsystem
SP	Specification
SPEC	Specification
SR&QA	Safety, Reliability, and Quality Assurance
STD	Standard
TBD	To Be Determined
TBR	To Be Reviewed
TCS	Thermal Control Subsystem
TMIS	Technical and Management Information System
WTR	Western Test Range

6.3 Exceptions to the GIS and GIIS

None.

6.4 Requirements Traceability Matrix

Requirements in Section 3 of this specification were derived from the source document, PS20005396, Contract End Item (CEI) Specification. Compliance to these requirements are shown in the Requirements Traceability Matrix, Attachment B, provided under separate cover.

(This page intentionally left blank.)

APPENDIX I

10 ELECTRICAL CONNECTOR CONTACT ASSIGNMENTS

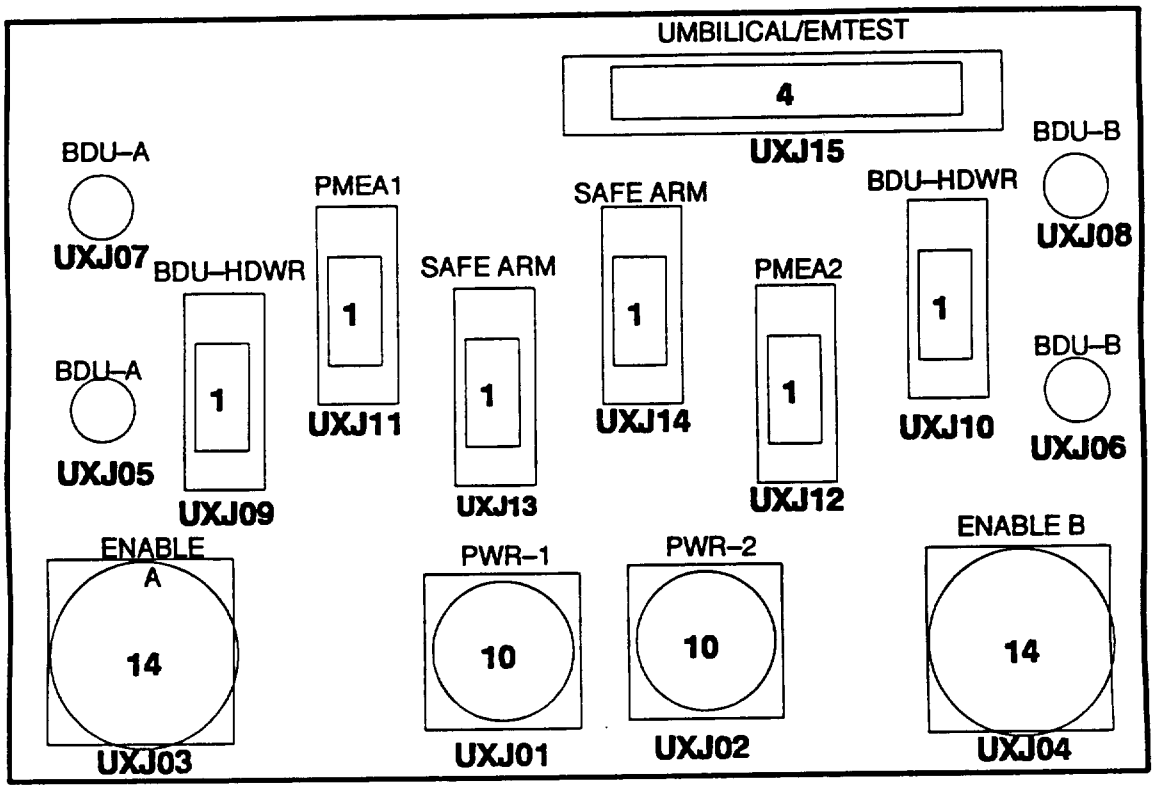

Figure 9. Electrical Interface Bracket Connector Locations

Connector Designation: J01 Part Number: 20034844PJ1B98N		Connector Function: Power Connector Type: 5 pin circular	
Contact Number	**Function Name**	**Circuit Category**	**Destination / Source**
(TBD–1)	Prim 120V +	(TBD–2)	EPS PDU
(TBD–1)	Prim 120V –	(TBD–2)	EPS PDU

Connector Designation: J02 Part Number: 20034844PJ1B98A		Connector Function: Power Connector Type: 5 pin circular	
Contact Number	**Function Name**	**Circuit Category**	**Destination / Source**
(TBD–1)	Sec 120V +	(TBD–2)	EPS PDU
(TBD–1)	Sec 120V –	(TBD–2)	EPS PDU

Connector Designation: J03 Part Number: 20038047PJ1D35N		Connector Function: REA Odd Test Connector Type: 37 pin circular	
Contact Number	**Function Name**	**Circuit Category**	**Destination / Source**
(TBD–1)	REA 1 Coil A +	(TBD–2)	REA 1
(TBD–1)	REA 1 Coil A –	(TBD–2)	REA 1
(TBD–1)	REA 1 Coil B +	(TBD–2)	REA 1
(TBD–1)	REA 1 Coil B –	(TBD–2)	REA 1
(TBD–1)	REA 3 Coil A +	(TBD–2)	REA 3
(TBD–1)	REA 3 Coil A –	(TBD–2)	REA 3
(TBD–1)	REA 3 Coil B +	(TBD–2)	REA 3
(TBD–1)	REA 3 Coil B –	(TBD–2)	REA 3
(TBD–1)	REA 5 Coil A +	(TBD–2)	REA 5
(TBD–1)	REA 5 Coil A –	(TBD–2)	REA 5
(TBD–1)	REA 5 Coil B +	(TBD–2)	REA 5
(TBD–1)	REA 5 Coil B –	(TBD–2)	REA 5
(TBD–1)	REA 7 Coil A +	(TBD–2)	REA 7
(TBD–1)	REA 7 Coil A –	(TBD–2)	REA 7
(TBD–1)	REA 7 Coil B +	(TBD–2)	REA 7

Connector Designation: J03 Part Number: 20038047PJ1D35N		Connector Function: REA Odd Test Connector Type: 37 pin circular	
Contact Number	**Function Name**	**Circuit Category**	**Destination / Source**
(TBD–1)	REA 7 Coil B –	(TBD–2)	REA 7
(TBD–1)	REA 9 Coil A +	(TBD–2)	REA 9
(TBD–1)	REA 9 Coil A –	(TBD–2)	REA 9
(TBD–1)	REA 9 Coil B +	(TBD–2)	REA 9
(TBD–1)	REA 9 Coil B –	(TBD–2)	REA 9
(TBD–1)	REA 11 Coil A +	(TBD–2)	REA 11
(TBD–1)	REA 11 Coil A –	(TBD–2)	REA 11
(TBD–1)	REA 11 Coil B +	(TBD–2)	REA 11
(TBD–1)	REA 11 Coil B –	(TBD–2)	REA 11
(TBD–1)	REA 13 Coil A +	(TBD–2)	REA 13
(TBD–1)	REA 13 Coil A –	(TBD–2)	REA 13
(TBD–1)	REA 13 Coil B +	(TBD–2)	REA 13
(TBD–1)	REA 13 Coil B –	(TBD–2)	REA 13
(TBD–1)	REA 15 Coil A +	(TBD–2)	REA 15
(TBD–1)	REA 15 Coil A –	(TBD–2)	REA 15
(TBD–1)	REA 15 Coil B +	(TBD–2)	REA 15
(TBD–1)	REA 15 Coil B –	(TBD–2)	REA 15

Connector Designation: J04 Part Number: 20038047PJ1D35A		Connector Function: REA Even Test Connector Type: 37 pin circular	
Contact Number	**Function Name**	**Circuit Category**	**Destination / Source**
(TBD–1)	REA 2 Coil A +	(TBD–2)	REA 2
(TBD–1)	REA 2 Coil A –	(TBD–2)	REA 2
(TBD–1)	REA 2 Coil B +	(TBD–2)	REA 2
(TBD–1)	REA 2 Coil B –	(TBD–2)	REA 2
(TBD–1)	REA 4 Coil A +	(TBD–2)	REA 4
(TBD–1)	REA 4 Coil A –	(TBD–2)	REA 4
(TBD–1)	REA 4 Coil B +	(TBD–2)	REA 4
(TBD–1)	REA 4 Coil B –	(TBD–2)	REA 4
(TBD–1)	REA 6 Coil A +	(TBD–2)	REA 6
(TBD–1)	REA 6 Coil A –	(TBD–2)	REA 6
(TBD–1)	REA 6 Coil B +	(TBD–2)	REA 6
(TBD–1)	REA 6 Coil B –	(TBD–2)	REA 6
(TBD–1)	REA 8 Coil A +	(TBD–2)	REA 8
(TBD–1)	REA 8 Coil A –	(TBD–2)	REA 8
(TBD–1)	REA 8 Coil B +	(TBD–2)	REA 8
(TBD–1)	REA 8 Coil B –	(TBD–2)	REA 8
(TBD–1)	REA 10 Coil A +	(TBD–2)	REA 10
(TBD–1)	REA 10 Coil A –	(TBD–2)	REA 10
(TBD–1)	REA 10 Coil B +	(TBD–2)	REA 10
(TBD–1)	REA 10 Coil B –	(TBD–2)	REA 10
(TBD–1)	REA 12 Coil A +	(TBD–2)	REA 12
(TBD–1)	REA 12 Coil A –	(TBD–2)	REA 12
(TBD–1)	REA 12 Coil B +	(TBD–2)	REA 12
(TBD–1)	REA 12 Coil B –	(TBD–2)	REA 12
(TBD–1)	REA 14 Coil A +	(TBD–2)	REA 14
(TBD–1)	REA 14 Coil A –	(TBD–2)	REA 14
(TBD–1)	REA 14 Coil B +	(TBD–2)	REA 14
(TBD–1)	REA 14 Coil B –	(TBD–2)	REA 14
(TBD–1)	REA 16 Coil A +	(TBD–2)	REA 16
(TBD–1)	REA 16 Coil A –	(TBD–2)	REA 16

Connector Designation: J04 Part Number: 20038047PJ1D35A		Connector Function: REA Even Test Connector Type: 37 pin circular	
Contact Number	**Function Name**	**Circuit Category**	**Destination / Source**
(TBD–1)	REA 16 Coil B +	(TBD–2)	REA 16
(TBD–1)	REA 16 Coil B –	(TBD–2)	REA 16

Connector Designation: J05 Part Number: 20040889P1		Connector Function: 1553 Bus A BDU–A Connector Type: Triax circular	
Contact Number	**Function Name**	**Circuit Category**	**Destination / Source**
(TBD–1)	High	(TBD–2)	C&DH Bus
(TBD–1)	Low	(TBD–2)	C&DH Bus
Shield	Shield		C&DH Bus

Connector Designation: J06 Part Number: 20040889P1		Connector Function: 1553 Bus B BDU–A Connector Type: Triax circular	
Contact Number	**Function Name**	**Circuit Category**	**Destination / Source**
(TBD–1)	High	(TBD–2)	C&DH Bus
(TBD–1)	Low	(TBD–2)	C&DH Bus
Shield	Shield		C&DH Bus

Connector Designation: J07 Part Number: 20040889P1		Connector Function: 1553 Bus A BDU–B Connector Type: Triax circular	
Contact Number	**Function Name**	**Circuit Category**	**Destination / Source**
(TBD–1)	High	(TBD–2)	C&DH Bus
(TBD–1)	Low	(TBD–2)	C&DH Bus
Shield	Shield		C&DH Bus

Connector Designation: J08 Part Number: 20040889P1		Connector Function: 1553 Bus B BDU–B Connector Type: Triax circular	
Contact Number	Function Name	Circuit Category	Destination / Source
(TBD–1)	High	(TBD–2)	C&DH Bus
(TBD–1)	Low	(TBD–2)	C&DH Bus
Shield	Shield		C&DH Bus

Connector Designation: J09 Part Number: 20042415P1009PA		Connector Function: BDUA Input Commands Connector Type: 9 pin rectangular	
Contact Number	Function Name	Circuit Category	Destination / Source
(TBD–1)	BDUA On +	(TBD–2)	C&DH CTIU
(TBD–1)	BDUA On –	(TBD–2)	C&DH CTIU
(TBD–1)	BDUA Off +	(TBD–2)	C&DH CTIU
(TBD–1)	BDUA Off –	(TBD–2)	C&DH CTIU

Connector Designation: J10 Part Number: 20042415P1009PA		Connector Function: BDUB Input Commands Connector Type: 9 pin rectangular	
Contact Number	Function Name	Circuit Category	Destination / Source
(TBD–1)	BDUB On +	(TBD–2)	C&DH CTIU
(TBD–1)	BDUB On –	(TBD–2)	C&DH CTIU
(TBD–1)	BDUB Off +	(TBD–2)	C&DH CTIU
(TBD–1)	BDUB Off –	(TBD–2)	C&DH CTIU

Connector Designation: J11 Part Number: 20042415P1015PB		Connector Function: PMEA1 Inputs Connector Type: 15 pin rectangular	
Contact Number	**Function Name**	**Circuit Category**	**Destination / Source**
(TBD–1)	Command Data +	(TBD–2)	GN&C ACE
(TBD–1)	Command Data –	(TBD–2)	GN&C ACE
(TBD–1)	Command Clk +	(TBD–2)	GN&C ACE
(TBD–1)	Command Clk –	(TBD–2)	GN&C ACE
(TBD–1)	Command Ena +	(TBD–2)	GN&C ACE
(TBD–1)	Command Ena –	(TBD–2)	GN&C ACE
(TBD–1)	Safe Mode +	(TBD–2)	GN&C ACE
(TBD–1)	Safe Mode –	(TBD–2)	GN&C ACE

Connector Designation: J12 Part Number: 20042415P1015PB		Connector Function: PMEA2 Inputs Connector Type: 15 pin rectangular	
Contact Number	**Function Name**	**Circuit Category**	**Destination / Source**
(TBD–1)	Command Data +	(TBD–2)	GN&C ACE
(TBD–1)	Command Data –	(TBD–2)	GN&C ACE
(TBD–1)	Command Clk +	(TBD–2)	GN&C ACE
(TBD–1)	Command Clk –	(TBD–2)	GN&C ACE
(TBD–1)	Command Ena +	(TBD–2)	GN&C ACE
(TBD–1)	Command Ena –	(TBD–2)	GN&C ACE
(TBD–1)	Safe Mode +	(TBD–2)	GN&C ACE
(TBD–1)	Safe Mode –	(TBD–2)	GN&C ACE

Connector Designation: J13 Part Number: 20042415P1009SA		Connector Function: PMEA1 Safe/Arm Plug I/O Connector Type: 9 pin circular	
Contact Number	**Function Name**	**Circuit Category**	**Destination / Source**
(TBD–1)	Safe/Arm Prim In A	(TBD–2)	Safe/Arm Plug
(TBD–1)	Safe/Arm Prim In B	(TBD–2)	Safe/Arm Plug
(TBD–1)	Safe/Arm Prim Out A	(TBD–2)	Safe/Arm Plug
(TBD–1)	Safe/Arm Prim Out B	(TBD–2)	Safe/Arm Plug

Connector Designation: J14 Part Number: 20042415P1009SA		Connector Function: PMEA2 Safe/Arm Plug I/O Connector Type: 9 pin circular	
Contact Number	**Function Name**	**Circuit Category**	**Destination / Source**
(TBD–1)	Safe/Arm Sec In A	(TBD–2)	Safe/Arm Plug
(TBD–1)	Safe/Arm Sec In B	(TBD–2)	Safe/Arm Plug
(TBD–1)	Safe/Arm Sec Out A	(TBD–2)	Safe/Arm Plug
(TBD–1)	Safe/Arm Sec Out B	(TBD–2)	Safe/Arm Plug

Connector Designation: J15 Part Number: 20042415P1062PB		Connector Function: Propulsion Module Test Connector Type: 62 pin rectangular	
Contact Number	**Function Name**	**Circuit Category**	**Destination / Source**
(TBD–1)	Pressure Xducer +28V	(TBD–2)	PMEA1
(TBD–1)	Pressure Xducer +28V Return	(TBD–2)	PMEA1
(TBD–1)	Pressure Xducer Telemetry	(TBD–2)	PMEA1
(TBD–1)	Pressure Xducer Telemetry Return	(TBD–2)	PMEA1
(TBD–1)	Tank Temp Sensor 1	(TBD–2)	Tank Thermistor
(TBD–1)	Tank Temp 1 Return	(TBD–2)	Tank Thermistor
(TBD–1)	Tank Temp Sensor 2	(TBD–2)	Tank Thermistor
(TBD–1)	Tank Temp 2 Return	(TBD–2)	Tank Thermistor
(TBD–1)	Latch Valve 1 Open Prim	(TBD–2)	Latch Valve 1
(TBD–1)	Latch Valve 1 Open Prim Return	(TBD–2)	Latch Valve 1
(TBD–1)	Latch Valve 1 Open Sec	(TBD–2)	Latch Valve 1
(TBD–1)	Latch Valve 1 Open Sec Return	(TBD–2)	Latch Valve 1
(TBD–1)	Latch Valve 1 Close Prim	(TBD–2)	Latch Valve 1
(TBD–1)	Latch Valve 1 Close Prim Return	(TBD–2)	Latch Valve 1
(TBD–1)	Latch Valve 1 Close Sec	(TBD–2)	Latch Valve 1
(TBD–1)	Latch Valve 1 Close Sec Return	(TBD–2)	Latch Valve 1
(TBD–1)	Latch Valve 2 Open Prim	(TBD–2)	Latch Valve 2
(TBD–1)	Latch Valve 2 Open Prim Return	(TBD–2)	Latch Valve 2
(TBD–1)	Latch Valve 2 Open Sec	(TBD–2)	Latch Valve 2

Connector Designation: J15 Part Number: 20042415P1062PB		Connector Function: Propulsion Module Test Connector Type: 62 pin rectangular	
Contact Number	**Function Name**	**Circuit Category**	**Destination / Source**
(TBD–1)	Latch Valve 2 Open Sec Return	(TBD–2)	Latch Valve 2
(TBD–1)	Latch Valve 2 Close Prim	(TBD–2)	Latch Valve 2
(TBD–1)	Latch Valve 2 Close Prim Return	(TBD–2)	Latch Valve 2
(TBD–1)	Latch Valve 2 Close Sec	(TBD–2)	Latch Valve 2
(TBD–1)	Latch Valve 2 Close Sec Return	(TBD–2)	Latch Valve 2
(TBD–1)	Latch Valve 1 Telemetry	(TBD–2)	Latch Valve 1
(TBD–1)	Latch Valve 1 Telemetry Return	(TBD–2)	Latch Valve 1
(TBD–1)	Latch Valve 2 Telemetry	(TBD–2)	Latch Valve 2
(TBD–1)	Latch Valve 2 Telemetry Return	(TBD–2)	Latch Valve 2
(TBD–1)	REA Timer D0	(TBD–2)	PMEA 1 *
(TBD–1)	REA Timer D1	(TBD–2)	PMEA 1 *
(TBD–1)	REA Timer D2	(TBD–2)	PMEA 1 *
(TBD–1)	REA Timer D3	(TBD–2)	PMEA 1 *
(TBD–1)	REA Timer D4	(TBD–2)	PMEA 1 *
(TBD–1)	REA Timer D5	(TBD–2)	PMEA 1 *
(TBD–1)	REA Timer D6	(TBD–2)	PMEA 1 *
(TBD–1)	REA Address A0	(TBD–2)	PMEA 1 *
(TBD–1)	REA Address A1	(TBD–2)	PMEA 1 *
(TBD–1)	REA Address A2	(TBD–2)	PMEA 1 *
(TBD–1)	REA Address A3	(TBD–2)	PMEA 1 *
(TBD–1)	REA Read Strobe	(TBD–2)	PMEA 1 *
(TBD–1)	PMEA Gnd Ref	(TBD–2)	PMEA 1 *
(TBD–1)	PMEA Gnd Ref	(TBD–2)	PMEA 1 *

Connector Designation: J15 Part Number: 20042415P1062PB		Connector Function: Propulsion Module Test Connector Type: 62 pin rectangular	
Contact Number	**Function Name**	**Circuit Category**	**Destination / Source**
(TBD–1)	PMEA Gnd Ref	(TBD–2)	PMEA 1 *
(TBD–1)	REA Timer D0	(TBD–2)	PMEA 2 *
(TBD–1)	REA Timer D1	(TBD–2)	PMEA 2 *
(TBD–1)	REA Timer D2	(TBD–2)	PMEA 2 *
(TBD–1)	REA Timer D3	(TBD–2)	PMEA 2 *
(TBD–1)	REA Timer D4	(TBD–2)	PMEA 2 *
(TBD–1)	REA Timer D5	(TBD–2)	PMEA 2 *
(TBD–1)	REA Timer D6	(TBD–2)	PMEA 2 *
(TBD–1)	REA Address A0	(TBD–2)	PMEA 2 *
(TBD–1)	REA Address A1	(TBD–2)	PMEA 2 *
(TBD–1)	REA Address A2	(TBD–2)	PMEA 2 *
(TBD–1)	REA Address A3	(TBD–2)	PMEA 2 *
(TBD–1)	REA Read Strobe	(TBD–2)	PMEA 2 *
(TBD–1)	PMEA Gnd Ref	(TBD–2)	PMEA 2 *
(TBD–1)	PMEA Gnd Ref	(TBD–2)	PMEA 2 *
(TBD–1)	PMEA Gnd Ref	(TBD–2)	PMEA 2 *

*** Used during module level testing only — not cabled through umbillical**

(This page intentionally left blank.)

PS20001407
CAGE No. 49671
30 July 1993

Performance Specification
GN&C Sensor Equipment Module
for EOS–AM Spacecraft
(SP–801)

Prepared under:
Contract NAS5–32500
NASA Goddard Space Flight Center
Greenbelt, Maryland 20771

Prepared by:
Martin Marietta Corporation
Astro Space
P.O. Box 800
Princeton, New Jersey 08543–0800

DCC073093

(This page intentionally left blank.)

REVISION LOG

This log identifies those portions of this document which have been revised since the original issue. Revised portions of each page, for the current revision only, are identified by marginal striping.

Revision	Paragraph Number(s) Affected	Rev. Date	Approval
Initial Issue		7/30/93	CM/GSR

(This page intentionally left blank.)

TABLE OF CONTENTS

SECTION / PARAGRAPH	TITLE	PAGE
1	SCOPE	1
2	APPLICABLE DOCUMENTS	2
2.1	Government Documents	2
2.1.1	Military	2
2.1.2	NASA	2
2.2	Martin Marietta Astro Space Documents	3
2.2.1	Specifications	3
2.2.2	Standards	4
2.2.3	Drawings	5
2.2.4	Other Publications	5
3	REQUIREMENTS	7
3.1	GN&C Sensor Equipment Module Description	7
3.1.1	GN&C Sensor Equipment Module Functional Description	9
3.1.2	Interface Definition	9
3.1.2.1	Electrical	9
3.1.2.2	Command and Telemetry Interfaces	12
3.1.2.3	Mechanical Interfaces	13
3.1.2.4	Thermal	14
3.1.3	Major Component List	15
3.2	Characteristics	15
3.2.1	Performance	15
3.2.2	Physical Characteristics	16
3.2.2.1	Mass	16
3.2.2.2	Power Consumption	16
3.2.2.3	Power Dissipation	17
3.2.2.4	Dimension	17
3.2.2.5	Transport and Storage	17
3.2.2.6	Integration and Test	17

TABLE OF CONTENTS (Continued)

SECTION / PARAGRAPH	TITLE	PAGE
3.2.2.7	Layout	18
3.2.2.8	Configuration	18
3.2.2.9	Natural Frequency	18
3.2.2.10	Alignment	19
3.2.3	Reliability	19
3.2.4	Durability	19
3.2.5	Maintainability	19
3.2.6	Environmental Conditions	19
3.2.6.1	General	19
3.2.6.2	Sine Vibration	20
3.2.7	Transportability	20
3.3	Design and Construction	20
3.3.1	Materials, Processes, and Parts	20
3.3.2	Electric Fields	21
3.3.3	Magnetic Fields	21
3.3.4	Nameplates and Product Marking	21
3.3.5	Workmanship	22
3.3.6	Safety	22
3.3.7	Human Performance/Human Engineering	22
3.4	Documentation	22
3.4.1	Specifications	22
3.4.2	Drawings	22
3.4.3	Test Plans and Procedures	22
3.5	Precedence	23
4	QUALITY ASSURANCE PROVISIONS	25
4.1	General	25
4.1.1	Responsibility for Tests	25
4.1.2	Special Tests and Examinations	25
4.1.3	Reliability Test	25

TABLE OF CONTENTS (Continued)

SECTION / PARAGRAPH	TITLE	PAGE
4.1.4	Engineering Evaluation and Test	25
4.1.5	Protoflight Test	25
4.1.6	Installation Test and Checkout	26
4.1.6.1	Electrical Integration and Checkout (EIC)	27
4.1.6.2	Interface Unit Functional Test (FT)	27
4.1.6.3	Comprehensive Performance Test (CPT)	27
4.1.6.4	Interface Verification Test (IVT)	27
4.1.7	Formal Test Verification	27
4.2	Quality Conformance Inspections	28
4.2.1	Method of Verification	28
4.2.1.1	Inspection	28
4.2.1.2	Analysis	28
4.2.1.3	Demonstration	28
4.2.1.4	Test	28
4.2.1.5	Classification of Characteristics	28
4.2.1.6	Test Equipment	28
5	PREPARATION FOR DELIVERY	31
5.1	General	31
6	NOTES	33
6.1	Definitions	33
6.2	Abbreviations and Acronyms	33
6.3	Exceptions to the GIS and GIIS	34
6.4	Requirements Traceability Matrix	34

APPENDIX I

10	GN&C EM ELECTRICAL CONNECTOR CONTACT ASSIGNMENTS	35

LIST OF FIGURES

FIGURE	TITLE	PAGE
1	Sensor Module Functional Block Diagram	8
2	GN&C Sensor Equipment Module Layout	10
3	Electrical Power Interface Diagram	11
4	Sensor Module Command and Telemetry Bus Connection Diagram	13
5	GN&C Sensor EM Integration And Test Flow	26
6	GN&C Sensor EM Interface Bracket	36
7	GN&C Sensor EM – Z Panel Interface Bracket (Page 1 of 2)	37

LIST OF TABLES

TABLE	TITLE	PAGE
I	GN&C Sensor Equipment Module Subsytem Functions	7
II	GN&C Sensor Module Major Components	15
III	GN&C Sensor EM Power Consumption (Watts)	16
IV	EM Component Alignment Requirements	19

TBD LOG

ITEM	SECTION	PAGE	SUBJECT	RESP.	DUE
TBD–1	3.1.2.1	11	EM Harness Installation Drawing	S. Holaday	3/94
TBD–2	Table III	16	SM Heater Power Consumption	C. Scott	12/93
TBD–3	3.2.2.6	18	Ground Cooling of EM	C.Scott/E.Shade	12/93
TBD–4	Appendix I	35	Contact Number Assignments	S. Holaday	3/94
TBD–5	Appendix I	35	Circuit Categories	S. Holaday	9/30/93

1 SCOPE

This specification establishes the performance, design, development, and test requirements for the Guidance, Navigation and Control Sensor Equipment Module (EM) Critical Item. The GN&C Sensor EM shall meet all the applicable requirements of the Contract End Item (CEI) Specification for the EOS Spacecraft, PS20005396 (SEP–101), throughout its design life. The principal requirement of modularity to facilitate Spacecraft construction, maintenance and serviceability is satisfied by this module design. The equipment module will be designed to facilitate producibility, integration, and accessibility to the internal components while minimizing weight. The equipment module will be modular to allow on–ground removal and replacement onto the Spacecraft core.

2 APPLICABLE DOCUMENTS

All and only those documents referenced in Sections 3, 4, 5 and Appendices of the specification shall be listed in Section 2 of the specification. References are confined to documents currently available at the time of issuance of the current revision of this specification.

2.1 Government Documents

The following documents of the exact issue shown, form a part of this specification to the extent specified herein. In the event of conflict between the documents referenced herein and the contents of this specification, the contents of this specification shall take precedence, except as defined in Section 3.6 herein.

2.1.1 Military

MSFC–SPEC–522	Design Criteria for Controlling Stress Corrosion
MIL–STD–889 (Rev B) 4 March 1988	Dissimilar Metals
MIL–STD–1553 (Rev. B) 8 September 86	Digital Time Division Command/Response Multiplex Data Bus
MIL–STD–1472 (Rev. D) 20 March 1991	Human Engineering Design Criteria for Military Systems, Equipment, and Facilities
WSMCR–127–1 December 1989	Western Space and Missile Center Range Safety Regulations

2.1.2 NASA

420–03–02 15 April 1992	General Instrument Interface Specification (GIS)
420–05–02 8 November 1991	Performance Assurance Requirements for the EOS Observatories (PAR)
421–10–01 1 May 1992	Requirements Document for the EOS–AM Spacecraft (RD)
NHB 5300.4 (3A–1) December 1976	Requirements for Soldered Electrical Connections
NHB 5300.4 (3G) April 1985	Requirements for Interconnecting Cables, Harnesses and Wiring
NHB 5300.4 (3H) May 1984	Requirements for Crimping and Wire Wrap

NHB 5300.4 (3I) May 1984	Requirements for Printed Wiring Boards
NHB 5300.4 (3J) April 1985	Requirements for Conformal Coating and Staking of Printed Wiring Boards and Electronic Assemblies
NHB 5300.4 (3K)	Design Requirements for Rigid Printed Wiring Boards and Assemblies

2.2 Martin Marietta Astro Space Documents

Unless otherwise specified, the following documents of the latest issue form a part of this specification to the extent specified herein. In the event of conflict between the documents referenced herein and the contents of this specification, the contents of this specification shall be considered a superseding requirement, except for higher tier documents.

2.2.1 Specifications

IS20008501	General Interface Specification for the Earth Observing System, ICD–101
PN20001412	EOS–AM Spacecraft Contamination Control Plan (SEP–107)
PN20005397	EOS–AM Performance Assurance Implementation Plan (PAIP) (PA–100)
PN20005404	Verification Plan for the Earth Observing System, VRD–100
PN20005869	EOS EMC Control Plan, SEP–106
PN20008664	Comprehensive Test Plan for the EOS–AM Spacecraft, VRD–105
PS20001415	Structures and Mechanisms Subsystem (SMS) Performance Specification, SP–101
PS20001423	Critical Item Development Specification for Reaction Wheel Assembly, SP–602
PS20003823	Inertial Reference Unit Critical Item Development Specification, SP–602
PS20003825	Performance Specification for Three–Axis Magnetometer, SP–602
PS20003827	Performance Specification for Earth Sensor Assembly SP–602

PS20003829	Magnetic Torquer Rod Critical Item Development Specification, SP–602
PS20003830	Critical Item Development Specification for Solid–State Star Tracker, SP–602
PS20004937	Guidance, Navigation, and Control Subsystem Specification, SP–601
PS20005396	Contract End Item (CEI) Specification (SEP–101) for the EOS–AM Spacecraft
PS20005404	Verification Specification for the Earth Observing System, VRD–110
PS20008549	Thermal Control Subsystem Performance Specification SP–201
PS20008550	Heater Control Electronics, SP–202
PS20008568	Bus Data Unit Performance Specification, SP–302
PS20008602	Performance Specification for Array Drive Electronics, SP–502
PS20008636	Electrical Accommodation Subsystem Performance Specification, SP–741
PS20008669	Performance Specification for Coarse Sun Sensor, SP–602
PS20008677	Thermal Blanket Performance Specification
PS20008915	Power Switching Unit
PS20034900	GN&C Attitude Control Electronics Performance Specification
Source:	Martin Marietta Astro Space P. O. Box 800 Princeton, NJ 08543–0800

2.2.2 Standards

S32534, Rev. E	Identification Marking
Source:	Martin Marietta Astro Space P. O. Box 800 Princeton, NJ 08543–0800

2.2.3 Drawings

20001400	Kinematic Mounts
20001407	GN&C Sensor Module Assembly Drawing

2.2.4 Other Publications

20001430	Ground Support Equipment Requirements Document (SEP–104)
20005397 18 March 1992	Performance Assurance Implementation Plan (PA–100)
20008536 14 May 1992	EOS–AM Spacecraft Specification Tree
20008540 31 July 1991	Logistics Plan
20008648 10 March 1992	EOS Program Approved Parts List, PA–325
20008650 23 March 1992	EOS Program Approved Materials and Processes List, PA–460
PN20001407 07 September 1992	GN&C Sensor Module Test Plan
Source:	Martin Marietta Astro Space P. O. Box 800 Princeton, NJ 08543–0800

(This page intentionally left blank.)

3 REQUIREMENTS

The Guidance, Navigation and Control Sensor Equipment Module shall meet all performance requirements specified herein under all combinations of environmental conditions and input signals described below and after exposure to the launch environment described herein. All requirements are end–of–life (EOL) specifications unless stated otherwise

3.1 GN&C Sensor Equipment Module Description

The GN&C Sensor Equipment Module contains elements of several Spacecraft subsystems. These subsystems and their major functions performed within the EM are described in Table I.

Table I. GN&C Sensor Equipment Module Subsystem Functions

Subsystem and Performance Specification	Major EM Subsystem Functions
Command and Data Handling Subsystem (C&DH) PS20008567	– Provides data bus for EM component command and telemetry via BDU
Electrical Accommodations Subsystem (EAS) PS20008636	– Provides data signal input from Earth Sensor Assembly (ESA), Coarse Sun Sensors (CSS) and Array Drive Electronics (ADE) – Provides data signal input from launch vehicle separation switches – Provides Safe Mode status signals to the SCC and ADE – Provides externally accessible signal test points – Provides drive signals to Reaction Wheel Assemblies (RWA), Magnetic Torque Rods (MTR) and Propulsion Module Electronics Assembly (PMEA) during Safe Mode processing – Provides power to RWA tachometer
Electrical Power Subsystem (EPS) PS20004749	– Provides 120 volt power from the Spacecraft power bus – Provides power distribution and fusing for 120 volt EM components via the Fuse Distribution Box (FDB)
Thermal Control Subsystem (TCS) PS20008549	– Provides active thermal control via heaters and control electronics – Provides passive thermal control via radiative panels
Structures and Mechanisms Subsystem (SMS) PS20001415	– Provides mounting and alignment control for all EM components – Isolates optical bench (+Z panel) from thermally induced stress and distortion via kinematic mechanical interfaces

A functional block diagram GN&C Sensor EM is shown in Figure 1.

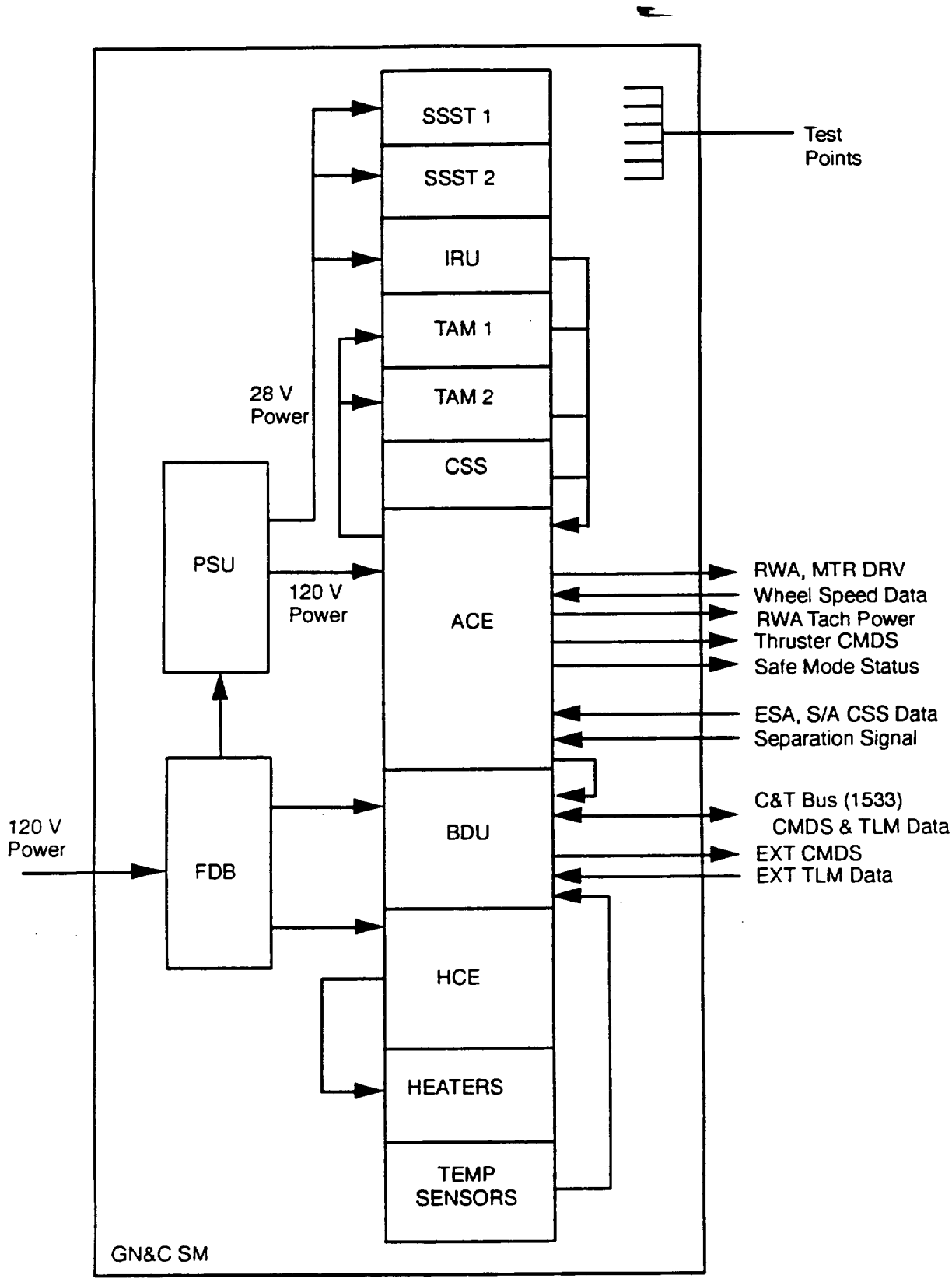

Figure 1. Sensor Module Functional Block Diagram

3.1.1 GN&C Sensor Equipment Module Functional Description

The GN&C Sensor EM houses and provides mounting, alignment and thermal control for the GN&C sensors and electronics associated with the module. It provides electrical interfaces to core spacecraft power, command and data services for the individual components housed in the EM. The GN&C Sensor EM consists of an equipment mounting shell and optical bench structure, kinematic mount assemblies, GN&C sensors and electronics, associated power, thermal and C&DH control and interface equipment, and an internal harness assembly.

Figure 2 depicts the layout of the Sensor EM. Two Solid State Star Trackers (SSST), an internally redundant Inertial Reference Unit (IRU), two Tri–Axial Magnetometers (TAM) consisting of separate sensor and electronics units, and an externally mounted Coarse Sun Sensor (CSS) pair make up the GN&C sensor suite of the module. The internally redundant digital Attitude Control Electronics (ACE) performs signal conditioning for many of the GN&C sensors and actuators, as well as providing a safe mode control capability independent of the Spacecraft Control Computer (SCC). A Power Switching Unit (PSU) and Fuse Distribution Box (FDB) provide power distribution and fusing to the individual components of the EM, while the Bus Data Unit (BDU) provides redundant control and telemetry interfaces for all internal equipment. Heater Control Electronics (HCE) boxes perform the necessary active thermal control for the EM.

The SSSTs and IRU are mounted to the +Z panel, or optical bench. Six kinematic mounts are used as the mechanical interface between the optical bench and the spacecraft primary structure in order to decouple thermally induced loads from either structure. The five–panel equipment mounting shell is attached to the optical bench using like–degree of freedom kinematic mounts in a stacked configuration. Mounting locations and details are found in the GN&C Sensor EM Panel Assembly Drawings, No. 20008898 through 20008903.

An interface connector bracket attached to the –Y panel of the equipment mounting shell provides the mechanical and electrical interface required to mate EM components with the spacecraft harness. An interconnect bracket is attached to the –X panel of the mounting shell in order to facilitate the sequential installation of the optical bench and equipment mounting shell to the spacecraft structure. Electrical connections between EM components and interface connectors are achieved with the EM harness, which is part of the Electrical Accommodations Subsystem (EAS).

3.1.2 Interface Definition

The GN&C Sensor Equipment Module and all included components shall utilize the standard interfaces defined in the General Interface Specification (GIS) for the Earth Observing System, IS20008501. Exceptions must be explicitly noted in either the component specifications or this document.

3.1.2.1 Electrical

[1] The EM shall comply with the requirements of Section 3 of the GIS, IS20008501, regarding Power, Grounds, Standard Signal Interfaces, Test Points, and Connectors and Pin Allocations.

[2] The EM shall comply with the Electrical Accommodation Subsystem Performance Specification, PS20008636, except for heritage design components which may require special grounding consideration.

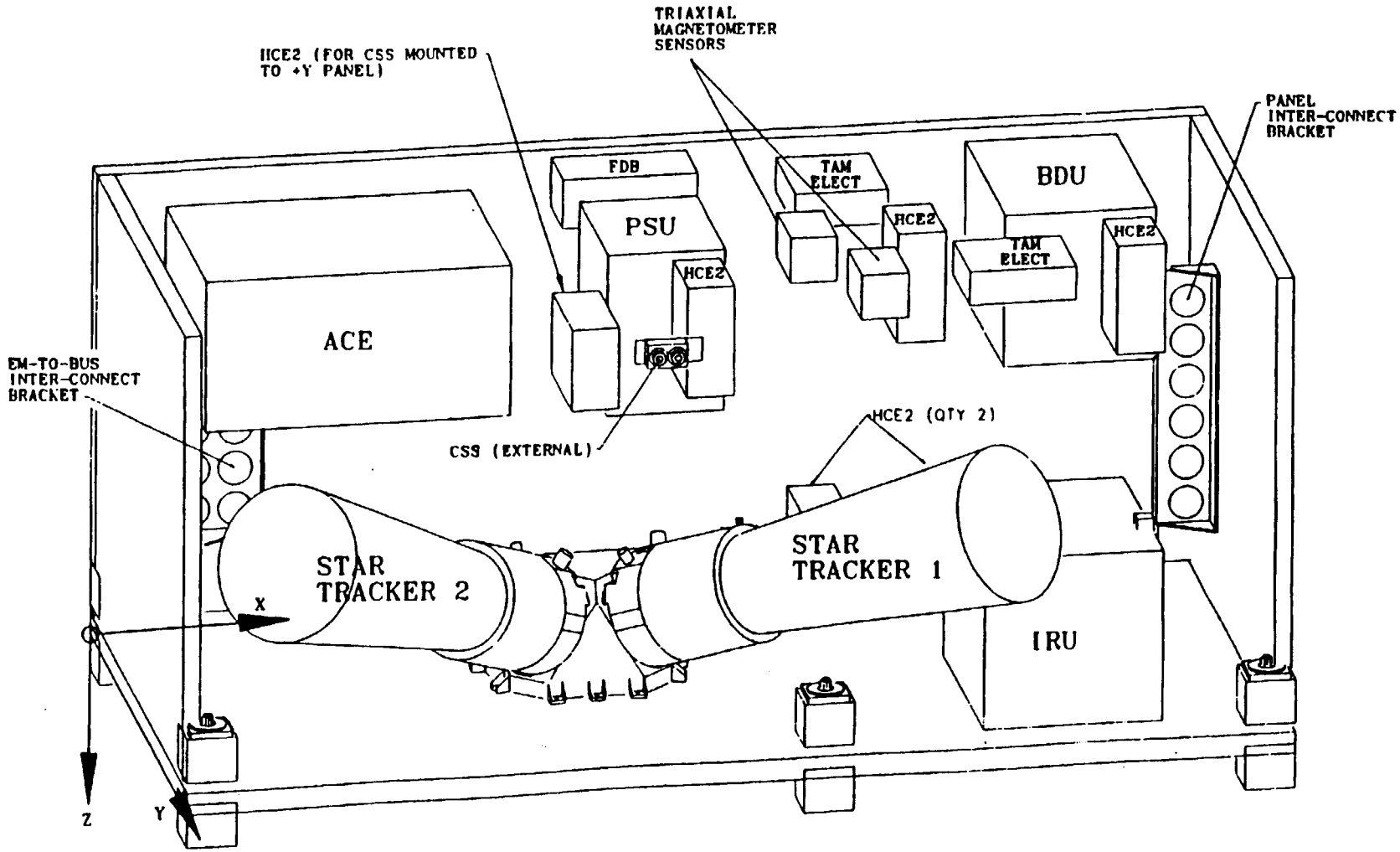

Figure 2. GN&C Sensor Equipment Module Layout

[3] All electrical connections between the EM and the spacecraft shall be accomplished through the use of interconnecting cables as described in the EM Harness Installation Drawing,(TBD–1)

[4] An electrical interface connector bracket on the +Z panel shall provide connectivity for all connectors required to mate to the Spacecraft harness. A detailed list of connector and contact assignments is presented in Appendix I.

[5] The EM shall meet the requirements specified for spacecraft equipment in the Equipment/Subsystems EMI Requirements Section of PN20005869 (EMC Control Plan).

3.1.2.1.1 Power

[1] The EM shall accept 120 Volts, ± 4%, primary power from the Spacecraft Electrical Power Subsystem (EPS), via the EAS, to the FDB.

[2] The EM shall connect to both A and B power bus feeds as shown in Figure 3.

3.1.2.1.2 Signal

[1] The EM shall accept data signals from the ESA electronics and provide external test points via the ACE, as defined in the ESA Critical Item Development Specification, PS20003827, and the ACE Performance Specification, PS20034900.

[2] The EM shall accept data signals from the body–mounted CSS and provide external test points via the ACE, as defined in the CSS Critical Item Development Specification, PS200086697, and the ACE Performance Specification, PS20034900.

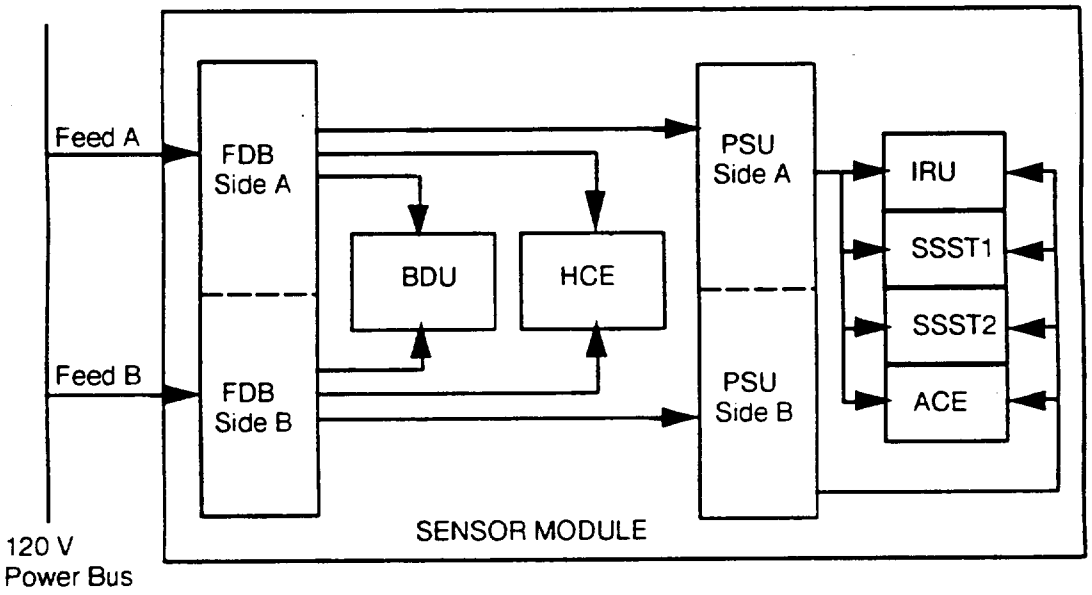

Figure 3. Electrical Power Interface Diagram

[3] The EM shall provide external test points for the IRU, as defined in the IRU Critical Item Development Specification, PS20003823, for the purpose of injecting electrical torquer stimulus signals via GSE.

[4] The EM shall provide external test points for the ACE, as defined in the ACE Performance Specification, PS20034900.

[5] The EM shall provide external test points for the SSST, as defined in the SSST Critical Item Development Specification, PS20003830.

[6] The EM shall provide external test points for the TAM, as defined in the TAM Critical Item Development Specification, PS20003825.

[7] The EM shall provide status/mode signals to the ADE, as defined in the Performance Specification for SADE, PS20008602.

[8] The EM shall provide drive signals to the RWAs, as defined in the RWA Critical Item Development Specification, PS20001423.

[9] The EM shall provide power to the RWA tachometers, as defined in the RWA Critical Item Development Specification, PS20001423.

[10] The EM shall provide drive signals to the MTRs as defined in the Torquer Rod Critical Item Development Specification, PS20003829.

[11] The EM shall provide drive commands to the PMEA, as defined in the Propulsion Subsystem Performance Specification, PS20008617.

3.1.2.2 Command and Telemetry Interfaces

The EM contains a BDU which governs the EM command and data interface.

[1] This interface shall be a redundant MIL–STD–1553B bus connected to both the A and B spacecraft command and telemetry buses, as shown in Figure 4.

[2] All command and data connections to the EM shall abide by this interface as defined in the BDU Performance Specification, PS20008568.

[3] The EM shall accept, and immediately execute, commands from the C&DHS to control, configure, or reconfigure the EM.

[4] The EM shall provide status data to the C&DHS sufficient to support normal operations, monitor the health and safety of the EM, and for diagnosis and analysis of anomalies.

3.1.2.2.1 Command Inputs

The function, format and timing of commands for EM components are listed in an appendix to the respective performance specification for each component.

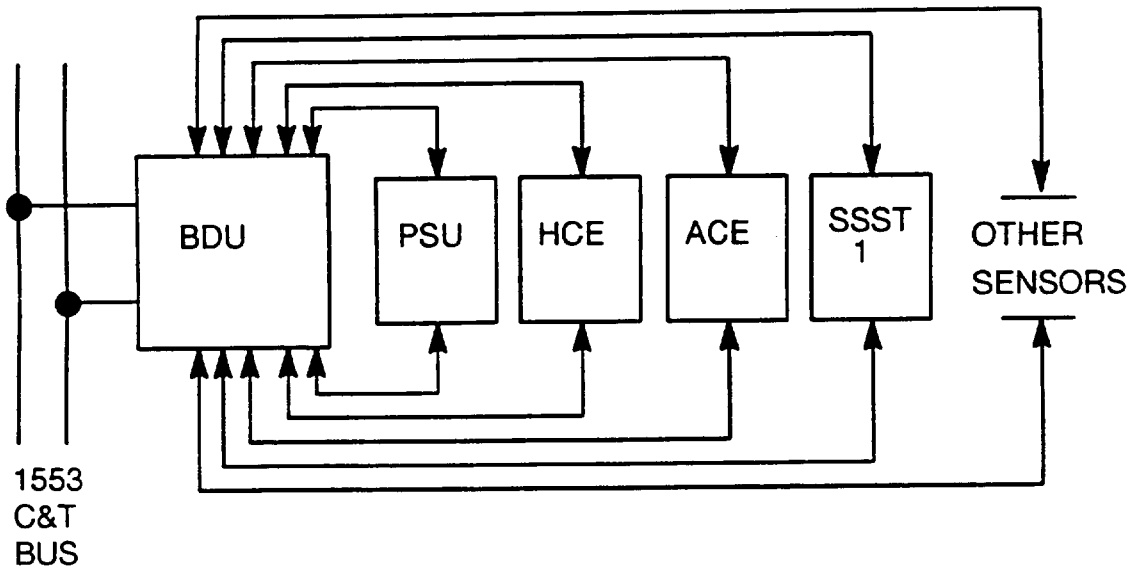

Figure 4. Sensor Module Command and Telemetry Bus Connection Diagram

3.1.2.2.2 Telemetry Outputs

The function, format and timing of telemetry for EM components are listed in an appendix to the respective performance specification for each component.

3.1.2.3 Mechanical Interfaces

[1] The EM shall comply with the requirements of Section 4 of the GIS, IS20008501, regarding Coordinate Systems, Physical Characteristics, Design and Construction, Mounting, Alignment, Mechanisms, Dynamic Characteristics, Structural Criteria, and Tooling.

[2] This mechanical interface shall be as defined by the Structure and Mechanism Performance Specification, PS20001415 and the GN&C Sensor Module Assembly Drawing, 20001407.

[3] The EM shall be attached to the primary structure in a stacked configuration. Each set of kinematic mounts shall consist of one 3–axis, one 2–axis, and four single–axis kinematic mounts to provide load paths to the primary spacecraft structure.

[4] The optical bench shall be mounted directly to the structure node fittings using six kinematic mounts, and the equipment mounting shell shall be mounted to the optical bench using six identical kinematic mounts.

[5] These mounts shall fall directly above, and attach to the same optical bench hard–points as the primary structure interface mounts. The purpose of the kinematic mounts is to minimize load sharing among structures.

[6] These mounts are shown in Drawing 20001400.

[7] The EM shall have a panel that can be removed to provide access to equipment contained within the module at the EM and Spacecraft levels of assembly.

[8] Removal of this panel shall be possible without requiring the removal of any other spacecraft equipment.

[9] The honeycomb core of the EM shall be densified locally to ensure that throughout testing, no component internal to the EM experiences accelerations greater than 1.25 times those defined in the Predicted Limit Loads figure of the General Interface Specification (GIS), IS20008501.

[10] The EM panels shall provide adequate strength at fastener locations for the mechanical mounting of components and assemblies listed in Table II of Section 3.1.3.

[11] The EM shall be designed so it can be independently assembled, tested, attached or detached from the EOS Spacecraft structure without requiring disassembly of thermal control subsystem hardware.

3.1.2.4 Thermal

[1] The EM shall comply with Section 5 of the GIS, IS20008501, regarding Thermal Interfaces, Environmental Flux Parameters, and Thermal Control Hardware.

[2] The EM shall comply with with the requirements of the Thermal Control System Performance Specification, PS20008549.

[3] The EM shall acquire, spread and reject component heat to the external Spacecraft sink as necessary to maintain the temperature at each component interface to levels below the maximum limits specified in the Temperature Requirements table in Section 5 of the GIS, IS20008501. (Constant conduction heat pipes embedded in the panel may be incorporated in the –Z and +Y panels of the EM to meet this purpose).

[4] The Heater Control Electronics (HCE2), using heaters and thermistors in the EM, shall maintain the temperature at each component interface to levels above the minimum limits specified in the Temperature Requirements table in Section 5 of the GIS, IS20008501.

[5] Heat dissipating components shall meet the EM/Component Conductive Interface requirements in Section 5 of the GIS, IS20008501.

[6] Temperature sensors and temperature sensing assemblies shall be provided and connected to the BDU for the purpose of tracking thermal performance.

3.1.3 Major Component List

The major components of the GN&C Sensor Equipment Module are listed in Table II. Each component of the EM shall meet the requirements imposed on it by its parent subsystem performance specification.

Table II. GN&C Sensor Module Major Components

Subsystem	Component	Part Number
Guidance, Navigation & Control	Star Trackers (SSST) – 2 Three Axis Magnetometer (TAM) – 2 Inertial Reference Unit (IRU) Coarse Sun Sensor (CSS) Attitude Control Electronics (ACE)	20003830 20003825 20003823 20003828 20003490
C&DH	Bus Data Unit (BDU) Electrical Power Conditioner (EPC) – 2	20008568 20008597
Power	Power Switching Unit (PSU) Fuse Distribution Box (FDB)	20008603 20034960
Thermal	Heater Control Electronics (HCE2) –6 Sensor Module Thermal Blanket Installation Temperature Sensor Heaters (includes SM, Makeup, IRU/ST)	20008785 20008677 20008790 20008788
Electrical Accommodations	Sensor Module Harness Installation GN&C Panel Power Harness GN&C Panel C&DH Harness	20038242 20008685 20038529
Structures and Mechanisms	Sensor Module Structure Assembly Access Panel –Y Radiator Panel Assembly –Z Radiator Panel Assembly +Y Kinematic Mount (12) Base Panel +Z (Optical Bench) End Panel +X, –X Constant Conductance Heat Pipe	20008897 20008898 20008899 20008901 20001400 20008900 20008902 20008711

3.2 Characteristics

3.2.1 Performance

The performance requirements for the GN&C Sensor EM are derived from the CEI Specification, PS20005396.

[1] The EM shall provide a temperature stability of 1 degree C per hour or less at the IRU baseplate during on–orbit operations.

[2] The EM +Z panel (optical bench) shall be designed to limit static thermal distortion of the panel to 5.0 arc seconds per axis.

[3] The EM +Z panel (optical bench) shall be designed to limit dynamic thermal distortion of the panel to 1.3 arc seconds per axis.

[4] The kinematic mounts attaching the EM +Z panel to the Spacecraft structure, and the equipment mounting shell to the EM +Z panel, shall be designed to limit static thermal distortion of the +Z panel to 2.0 arc seconds per axis.

[5] The kinematic mounts attaching the EM +Z panel to the Spacecraft structure, and the equipment mounting shell to the EM +Z panel, shall be designed to limit dynamic thermal distortion of the +Z panel to 0.2 arc seconds per axis.

[6] The thermal interface between the star tracker bracket and EM +Z panel shall be designed to limit static thermal distortion of the star tracker bracket to 5.0 arc seconds per axis.

[7] The thermal interface between the star tracker bracket and EM +Z panel shall be designed to limit dynamic thermal distortion of the star tracker bracket to 0.5 arc seconds per axis.

3.2.2 Physical Characteristics

3.2.2.1 Mass

The total weight of the EM shall not exceed 340 lbs.

3.2.2.2 Power Consumption

The power consumption for the Sensor EM for the different EOS spacecraft operating modes shall not exceed the values specified in Table III.

Table III. GN&C Sensor EM Power Consumption (Watts)[1]

Component	Ground Test and Launch/ Ascent Mode	Standby Mode	Delta-V Mode	Science Mode			Survival Mode	Safe Mode	
				Max	Nominal	Min[4]		Max	Min
POWER CONSUMPTION:									
CSS	0.0	0.0	0.0	0.0	0.0	0.0	0.0	0.0	0.0
SSST1	13.0	13.0	13.0	13.0	13.0	13.0	0.0	13.0	0.0
SSST2	13.0	13.0	13.0	13.0	13.0	13.0	0.0	13.0	0.0
TAM1	1.9	1.9	1.9	1.9	1.9	1.9	1.9	1.9	1.9
TAM2	0.0	0.0	0.0	0.0	0.0	0.0	0.0	0.0	0.0
IRU	28.0	28.0	28.0	28.0	28.0	28.0	28.0	28.0	28.0
ACE	48.3	48.3	48.3	48.3	48.3	48.3	48.3	48.3	48.3
BDU	9.2	9.2	9.2	9.2	9.2	9.2	9.2	9.2	9.2
PSU	15.5	15.5	15.5	15.5	15.5	15.5	15.5	15.5	15.5
FDB	0.0	0.0	0.0	0.0	0.0	0.0	0.0	0.0	0.0
SM HTRS	(TBD-2)	(TBD-2)	(TBD-2)	(TBD-2)	(TBD-2)	(TBD-2)	(TBD-2)	(TBD-2)	(TBD-2)

Table III. GN&C Sensor EM Power Consumption (Watts)[1] (Continued)

Component	Ground Test and Launch/ Ascent Mode	Standby Mode	Delta-V Mode	Science Mode			Survival Mode	Safe Mode	
				Max	Nominal	Min[4]		Max	Min
HCE2s [2]	4.95	4.95	1.7	1.7	1.7	1.7	4.95	4.95	1.7
Total EM:									

(1) Maximum allowable one orbit average power allocations to satisfy performance requirements for the mode.

(2) Does not include TCS heater power. Power shown is the sum of the allocations for the HCEs.

3.2.2.3 Power Dissipation

The thermal dissipation of the EM components shall be equal to the power consumption described in 3.2.2.2 except for the for the following components:

a. FDB dissipation shall be no greater than 1.1W in any mode, and

b. Power harness dissipation shall be no greater than 0.6W in any mode.

3.2.2.4 Dimension

The dimensions of the EM shall not exceed the dimensions given below. Actual dimensions are defined in assembly drawing 20001407.

Length (X)	66 inches
Width (Y)	32 inches
Height (Z)	30 inches

3.2.2.5 Transport and Storage

[1] Accommodations for tie-downs, pallets, packaging, and containers necessary for transport and storage of the Equipment Module shall be made to ease handling by, and interaction with, Ground Support Equipment (GSE).

[2] The proper orientation for placing items in storage or transportation containers shall be made obvious by design or marking.

[3] The EM shall provide lift points capable of supporting the EM and any accompanying GSE under handling loads of 2g vertical per MIL-STD-1367A.

[4] When four or more lift points are provided, any combination of three shall be capable of lifting the entire load.

3.2.2.6 Integration and Test

[1] The EM design shall define any GSE required for cooling the Assembly during I&T as well as during processing at the launch site.

[2] The Assembly shall incorporate the thermal GSE interfaces which are necessary to ensure adequate ground cooling.

[3] The interfaces shall be accessible to the thermal GSE at the Spacecraft level of assembly.

[4] Ground cooling of the EM shall be accomplished by **(TBD–3).**

[5] The EM design shall ensure that access to the interface connector is sufficient to preclude the need for blind–mate connectors during installation of the EM on the Spacecraft Core.

3.2.2.7 Layout

[1] The EM design shall ensure that optical alignment cubes located on the IRU, SSSTs and optical bench are externally visible from the +Y and one additional orthogonal direction at the EM and Spacecraft levels of assembly.

[2] Fuses for the EM shall be located, to the extent practical, such that it is possible to replace or view any fuse without requiring any disassembly of the EM.

[3] Component spacing shall provide clearance for harness runs and connector access.

[4] The EM shall, to the extent practical, ensure that any component contained in the Major Assembly can be removed without having to remove any other component.

[5] All flight equipment which would require maintenance during a storage period of 5 years or less shall be accessible when the Spacecraft is in its stored configuration.

[6] All Spacecraft components which are fragile or otherwise susceptible to damage shall, where practical, be guarded or located so as to reduce this susceptibility.

[7] Sensitive adjustment controls and actuators shall be located or guarded to protect them from inadvertent perturbation.

[8] Component labeling shall be visible when the component is installed in the parent assembly or stowed. Labels shall be installed such that they are readable by the unaided human eye.

3.2.2.8 Configuration

The EM shall conform to Martin Marietta Astro Space (Astro Space) assembly drawing 20001407. These drawings shall define the following parameters:

a. Physical size.

b. Mounting requirements and interfaces.

c. External finishes.

d. Electrical connector locations and sizes.

e. Connector reference designators.

f. Method of identification.

3.2.2.9 Natural Frequency

The natural frequency of the GN&C EM shall be no less than the level specified in the appendix to the Structures and Mechanisms Subsystem Performance Specification, PS20001415.

3.2.2.10 Alignment

Mounting location of all EM components shall be as specified in drawing 20001407. Mounting of the IRU, SSSTs and TAM sensors shall be in accordance with the mounting accuracy and alignment knowledge requirements shown in Table IV. Mounting accuracy is the absolute alignment of the component in the EM coordinate frame, as defined by the +Z panel optical bench alignment reference cube. Alignment knowledge is the post–installation measurement accuracy of component alignment in the EM coordinate frame, relative to the +Z panel optical bench alignment reference cube.

Table IV. EM Component Alignment Requirements

Component	Mounting Accuracy Requirement (arc seconds)	Alignment Knowledge Requirement (arc seconds)
IRU	300[1]	10[1]
SSSTs	300[1]	10[1]
TAM Sensors	900[2][3]	300[2][3]

[1] Requirement relative to component alignment cube and the EM +Z panel alignment reference cube.
[2] Requirement relative to component baseplate and the EM +Z panel alignment reference cube.
[3] Requirement may be verified by RSS of alignment tolerances.

3.2.3 Reliability

Reliability requirements are levied at the component level, and an overall reliability requirement for the GN&C Subsystem is defined in Section 3.2.5 of the GN&C Subsystem Specification, PS20004937.

3.2.4 Durability

The EM shall be capable of withstanding launch and on–orbit environments specified in the GIS, IS20008501, for a period of at least five years.

3.2.5 Maintainability

[1] The EM shall be designed so that no regular maintenance will be required. Any required maintenance will be performed at the component level only.

[2] Removable dust covers or other protective devices shall be provided over electrical connectors.

3.2.6 Environmental Conditions

3.2.6.1 General

[1] The EM shall be capable of meeting all performance requirements when operating in Spacecraft bay 3 on the –Z side of the Spacecraft.

[2] The EM shall be capable of be capable of meeting the requirements defined in this document after exposure to the handling, transportation, and launch environments defined in the GIS, IS20008501 Section 6,

[3] and to the test environments defined in the Verification Specification (VS), IS20005404.

[4] The EM shall be capable of be capable of meeting the requirements defined in this document during exposure to the mission orbit environment specified in the GIS, IS20008501 Section 6.

[5] The EM shall comply with the requirements of the Contamination Control Plan, PN20001412.

3.2.6.2 Sine Vibration

[1] The GN&C Sensor EM shall remain undamaged during and following exposure to the sine vibration tests.

[2] The EM structure shall ensure that no component internal to the EM experiences accelerations greater than 1.25 times those defined in the Predicted Limit Loads figure of the General Interface Specification (GIS), IS20008501 when the EM experiences the test levels.

3.2.7 Transportability

[1] The EM shall be capable of being transported by surface vehicle or aircraft.

[2] The transporting environment shall be controlled so as to be less severe than the specified operating environment.

3.3 Design and Construction

[1] Its design shall be such that it can be independently assembled, tested, and attached to or detached from the EOS–AM Spacecraft structure.

[2] The EM design shall preclude improper installation to the Spacecraft, where practical.

[3] All electrical connectors shall be selected, sized, keyed, and/or marked such that incorrect attachment to the mating connector is prevented.

[4] All connectors shall attach such that the connectors cannot be inadvertently unlocked during ground operations.

[5] The EM design shall comply with the Design and Construction requirements specified in the GIS, IS20008501, for General requirements, Identification and Marking except for the Content paragraph, Finishes, Venting, Interchangeability, and Drawing Terms and Tolerances.

3.3.1 Materials, Processes, and Parts

[1] All materials, parts, and processes used in the design and construction of the EM shall be selected and controlled in accordance with the requirements for Tooling in section 4 of the GIS, IS20008501.

3.3.2 Electric Fields

[1] Components shall meet the electric field emissions requirements in the Equipment Radiated Emissions (RE02, RE01/RE04) section of the Equipment EMI Requirements in the EMC Control Plan, PN20005869.

[2] Components shall meet the requirements of the Radiated Susceptibility (RS03) Electric Fields section and the

[3] Radiated Susceptibility On–Orbit Environment section of the Equipment EMI Requirements in the EMC Control Plan, PN20005869.

3.3.3 Magnetic Fields

[1] Components shall meet the magnetic field emission and

[2] magnetic properties requirements in the Equipment Radiated Emissions and Equipment Radiated Properties sections respectively of the Equipment EMI Requirements in the EMC Control Plan, PN20005869.

[3] Components shall meet the requirements of the Radiated Susceptibility (RS01) Magnetic Fields section of the Equipment EMI Requirements in the EMC Control Plan, PN20005869.

3.3.4 Nameplates and Product Marking

[1] The EM shall be marked for identification in accordance with the Identification Marking Standard, S32534, Rev E, and ICD 20001411.

[2] Conspicuous markings or labels shall be affixed to the EM components. The identification shall contain, as a minimum, the following:

a. Astro Space Part Number

b. "GN&C Sensor Equipment Module"

c. Revision Level

d. Date of Manufacture

e. Contract Number

[3] Applicable date-sensitive information shall also be identified.

[4] Hardware or equipment which is not suitable for use in flight, and which could be accidentally substituted for flight or flight spares hardware, shall be plainly marked and identified to indicate this status.

[5] All test points, adjustment devices, and alignment points shall be labeled for positive identification.

[6] Wires and cables for hardware shall not be identified by hot stamping directly onto primary or secondary (shield) insulation.

[7] The proper orientation for placing items in storage or transportation containers shall be obvious by design or marking.

3.3.5 Workmanship

[1] The electrical design of the EM shall be in accordance with the design requirements specified in NHB 5300.4 (3A-1, 3G through 3K).

3.3.6 Safety

[1] The design shall meet the factors of safety presented in the mechanical section of IS20008501.

[2] Where practical, hazards shall be eliminated or removed through design measures.

[3] Hazards which cannot be eliminated or removed shall, where practical, be prevented through incorporation and use of safety devices or features.

[4] Remaining hazards shall be controlled using warning devices and/or special procedures.

[5] Automated detection and safing of hazards which may cause personnel injury or loss of the Spacecraft shall be independent of those subsystems being monitored.

[6] Where practical, the detection and safing of lesser hazards shall also follow this practice.

[7] Design decisions shall accommodate compliance with safety requirements specified in this document before accommodating any other considerations (e.g., cost, schedule, performance).

3.3.7 Human Performance/Human Engineering

[1] The EM shall comply with the human engineering criteria of MIL-STD-1472.

3.4 Documentation

Documentation shall be in accordance with the Data Requirements list of the EOS-AM Spacecraft Statement of Work (SOW), contract number NAS5-32500.

3.4.1 Specifications

All parent and component specs associated with this specification are shown in the EOS-AM Spacecraft Specification Tree, 20008536.

3.4.2 Drawings

[1] The EM shall be defined by prepared drawings. Drawing 20001411G1 shall define and control the physical parameters of the EM,

[2] and drawing 20038240 shall describe the EM harness.

3.4.3 Test Plans and Procedures

[1] Detailed qualification and acceptance test plans and procedures shall be prepared.

3.5 Precedence

In the event of conflicting requirements between the documents referenced herein and the content of this document, the following descending order of precedence shall be used in resolution of the conflict:

a. Requirements Document for the EOS–AM Spacecraft (RD)

b. Performance Assurance Requirements for the EOS Observatories (PAR)

c. Unique Instrument Interface Documents

d. General Instrument Interface Specification (GIIS)

e. Contract End Item (CEI) Specification

f. External Interface Control Documents(ICD's) (e.g., EOS to Launch Vehicle, EOS to TDRSS, etc.)

g. Subsystem and Major Assembly Specifications

h. Component Specifications.

(This page intentionally left blank.)

4 QUALITY ASSURANCE PROVISIONS

This section outlines the structure and requirements of a quality assurance program for the EM. The purpose of the program is to demonstrate that the EM has been manufactured properly, that it meets the performance requirements defined in Section 3, and that it will operate properly when connected to its associated subsystems, EMs, major assemblies, and components. The overall quality assurance approach is defined in the Product Assurance Implementation Plan (PAIP), PN20005397. The general testing approach is defined in the Verification Plan, PN20005404. Specific test description and levels are found in the Verification Specification, PS20005404.

4.1 General

Each of the requirements in Section 3 of this specification shall be verified. Test methods and measurements shall be compliant with all requirements herein.

The test flow for the EM is defined in the GN&C Sensor EM Test Plan, PN20001409. The normal vibration strength testing of the Optical Bench will be performed using mass/thermal models. In addition the EM will undergo thermal cycling in order to characterize the alignment parameters before the flight components are mounted in the EM. These tests will be done at qualification levels and flight times. After the flight components are installed all testing will be done at acceptance levels.

4.1.1 Responsibility for Tests

Unless otherwise specified herein, or in the Statement of Work, acceptance and qualification testing shall be performed by Astro Space.

4.1.2 Special Tests and Examinations

Not applicable

4.1.3 Reliability Test

Not applicable

4.1.4 Engineering Evaluation and Test

Not applicable

4.1.5 Protoflight Test

Protoflight tests, combined with the other verification methods listed in the Verification Matrix, Attachment A (provided under separate cover), shall verify that the flight hardware design meets the technical requirements of Section 3 of this equipment module specification to assure operational suitability in the defined environments. Protoflight test hardware shall be used for qualification testing and shall be identical in configuration and production processing to flight hardware.

Protoflight tests, where specified, shall consist of qualification level exposure of the first flight article for acceptance level durations (time and/or cycles)

Protoflight tests shall be performed under strict control of environments and test procedures. Adjustments or tuning of protoflight test hardware is not permitted throughout the entire test program. The requirements of Section 3 to be verified prior to, during, or after each environment shall be as specified in PN20008745.

4.1.6 Installation Test and Checkout

Installation testing and checkout shall include continuity checking, interface mating, support equipment compatibility, and documentation verification. The GN&C Sensor EM Integration and Test Flow is shown in Figure 5.

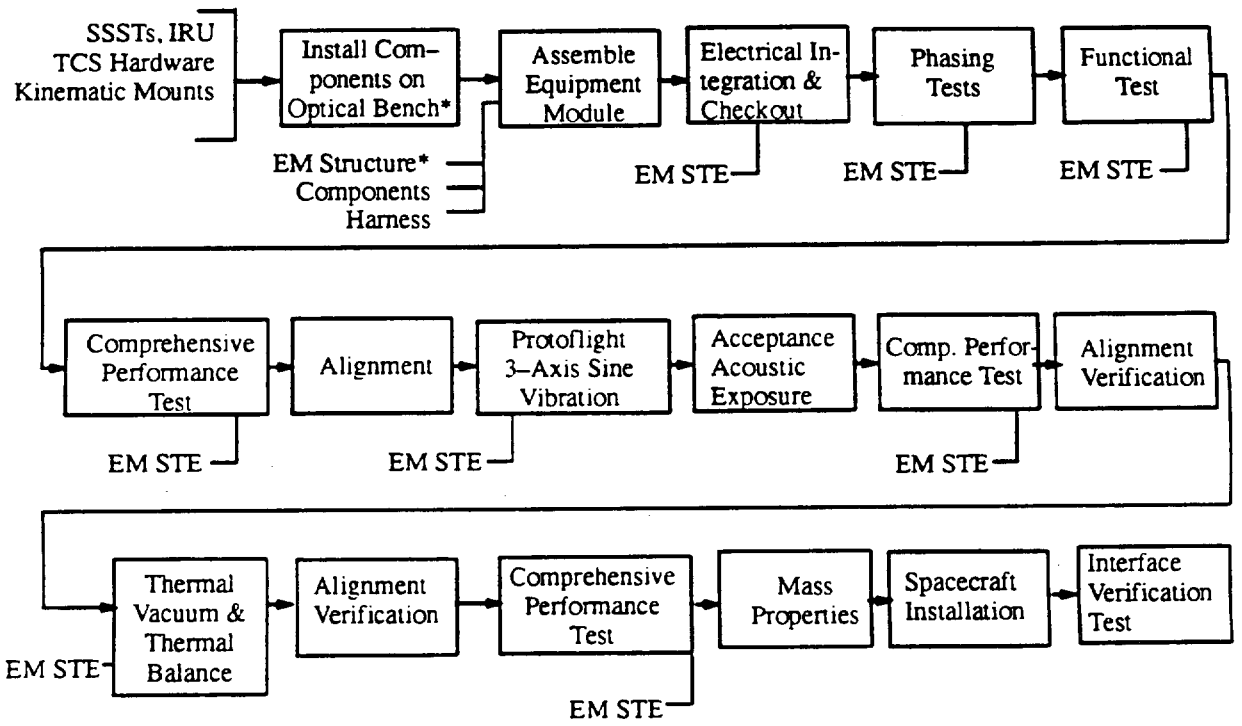

* EM Structures Strength Test and Modal Survey Performed using Mass Models in Lieu of Flight Components

Figure 5. GN&C Sensor EM Integration And Test Flow

4.1.6.1 Electrical Integration and Checkout (EIC)

An EIC shall be performed to verify the proper input and grounding of power, commands, and other signals prior to mating of flight hardware. The EIC shall also verify proper response to power, commands, and signal upon initial integration of flight hardware. The EM components shall be integrated into the module in the following order:

a. Kinematic Mount

b. GN&C Sensor EM Harness

c. Power Switching Unit (PSU)

d. Fuse and Distribution Box (FDB)

e. Heater Control Electronics (HCE2), Heaters and Sensors

f. Bus Data Unit (BDU)

g. Inertial Reference Unit (IRU)

h. Solid State Star Trackers (SSST)

i. Attitude Control Electronics (ACE)

j. Tri-axial Magnetometers (TAM).

4.1.6.2 Interface Unit Functional Test (FT)

A functional test of the Equipment Module shall be performed to test command and data paths between components and to exercise prime and redundant hardware.

4.1.6.3 Comprehensive Performance Test (CPT)

A CPT shall be performed to verify that the Equipment Module meets the performance requirements in all operational and contingency modes, as well as verifying all command and data paths and all redundant hardware.

4.1.6.4 Interface Verification Test (IVT)

An IVT shall be performed to verify the proper Equipment Module interfaces to the Spacecraft Bus. It verifies all power, ground, and signal connectors are properly mated and that there is signal presence on the proper connectors.

4.1.7 Formal Test Verification

Formal verification of the performance requirements of the EM are in the Verification Matrix, Attachment A. The Verification Matrix identifies the verification method as specified herein and the level at which tests are conducted. The EM shall be tested according to the GN&C Sensor EM Test Plan, PN20001409.

4.2 Quality Conformance Inspections

The equipment module shall be exposed to verification conditions which represent those environments encountered throughout the ground phase and flight mission. The environmental conditions and levels of exposure are defined in the Verification Specification for the Earth Observing System (VRD-110), PS20005404, Section 4. There are four methods which may be used individually or in combination to verify each requirement in Section 3. These methods,defined as inspection (I), analysis (A), demonstration (D), and test (T) are defined in the Verification Specification for the Earth Observing System (VRD-110), PS20005404, Section 4.

4.2.1 Method of Verification

4.2.1.1 Inspection

Inspection may be used to verify design and construction requirements, drawing compliance, or specific physical dimensions of the equipment module. Inspection is a method of verification of physical characteristics that determines compliance without the use special laboratory equipment, procedures, test support items, or services. Inspection uses standard methods such as visual gauges, etc., to verify compliance with requirements. Inspection also includes the review of design documents, material lists, code, plans, etc., to verify that requirements have been met.

4.2.1.2 Analysis

Analytical techniques may be used, in lieu of testing, to verify compliance to specified requirements, either alone or in combination with test. The selected techniques may include, typically, system engineering analysis, statistics, qualitative analysis, analog modeling, and computer simulation.

4.2.1.3 Demonstration

Demonstration is a qualitative method of verification that evaluates the properties of the subject equipment by observation. Demonstration is used with or without special test equipment or instrumentation to verify required characteristics such as operational functioning human engineering features, service and access features, transportability, and displayed data.

4.2.1.4 Test

Test is a quantitative method of verification wherein performance requirements are verified by measurement during and after the controlled application of functional and environmental stimuli. These measurements may require the use of laboratory equipment, recorded data, procedures, test support items, or services.

4.2.1.5 Classification of Characteristics

Classification of characteristics as critical, major or minor, shall be as defined in MIL-STD-109.

4.2.1.6 Test Equipment

[1] Existing test equipment shall be used wherever practical.

[2] Where new test equipment is required to test units which are physically or functionally identical or similar, the equipment shall be designed to perform its task(s) on each element of that group, where practical.

4.2.1.6.1 Test Equipment Safety Features

[1] Test equipment shall incorporate any safety interlocks or other safety features necessary to reduce the introduction of safety hazards by the test equipment.

[2] Any safety feature included in any Spacecraft test equipment shall give a visual, auditory, or electronic indication of activation when it is activated.

4.2.1.6.2 Test Equipment Verification

Unless otherwise specified herein, test equipment used to measure GN&C sensor EM performance characteristics shall be capable of demonstrating that

a. it will not impose environments on the tested item(s) beyond the levels called for in the Verification Specification, PS20005404, and

b. it is capable of imposing the test levels called for in the Verification Specification, PS20005404.

c. it is capable of meeting all the requirements imposed on it by the Ground Support Equipment Requirements Document, 20001430 (GSERD)

4.2.1.6.3 Test Equipment Calibration

[1] EM Test equipment shall be calibrated in accordance with the Performance Assurance Implementation Plan, 20005397.

(This page intentionally left blank.)

5 PREPARATION FOR DELIVERY

5.1 General

Interior and exterior shipping containers shall be marked in accordance with 20004280.

(This page intentionally left blank.)

6 NOTES

6.1 Definitions

6.2 Abbreviations and Acronyms

ACE	Attitude Control Electronics
ADE	Array Drive Electronics
BDU	Bus Data Unit
C&DHS	Command and Data Handling Subsystem
CDR	Critical Design Review
CEI	Contract End Item
CPT	Comprehensive Performance Test
CSS	Coarse Sun Sensor
EAS	Electrical Accommodation Subsystem
EIC	Electrical Integration and Checkout
EMC	Electromagnetic Compatibility
EOL	End–of–Life
EOS	Earth Observing System
ESA	Earth Sensor Assembly
FSS	Fine Sun Sensor
FT	Functional Test
GIS	General Interface Specification
GN&C	Guidance, Navigation, and Control
HCE	Heater Control Electronics
Hz	Hertz
ICD	Interface Control Document
IRU	Inertial Reference Unit
IVT	Interface Verification Test
I&T	Integration and Test
KM	Kinematic Mounts
lb	Pounds (Mass)
N/A	Not Applicable

PAIP	Performance Assurance Implementation Plan
PAML	Program Approved Materials and Processes List
PAPL	Program Approved Parts List
PAR	Performance Assurance Requirements
PDR	Preliminary Design Review
PSU	Power Switching Unit
RWA	Reaction Wheel Assembly
RWAM	Reaction Wheel Assembly Equipment Module
SCC	Spacecraft Control Computer
SM	GN&C Sensor Module
SMS	Structures and Mechanisms Subsystem
SOW	Statement of Work
SSST	Solid State Star Tracker
STE	Special Test equipment
TAM	Three–Axis Magnetometer
TBD	To Be Determined
TBR	To Be Reviewed/Resolved
TBS	To Be Supplied

6.3 Exceptions to the GIS and GIIS

None.

6.4 Requirements Traceability Matrix

Requirements in Section 3 of this specification were derived from the source document, PS20005396, Contract End Item (CEI) Specification. Compliance to these requirements are shown in the Requirements Traceability Matrix, Attachment B, provided under separate cover.

APPENDIX I

10 GN&C EM ELECTRICAL CONNECTOR CONTACT ASSIGNMENTS

The EM connectors on the electrical connector bracket shall be configured as shown in Figures 6 and 7.

All Contact Numbers are **(TBD–4)**.

All Circuit Categories are **(TBD–5)**.

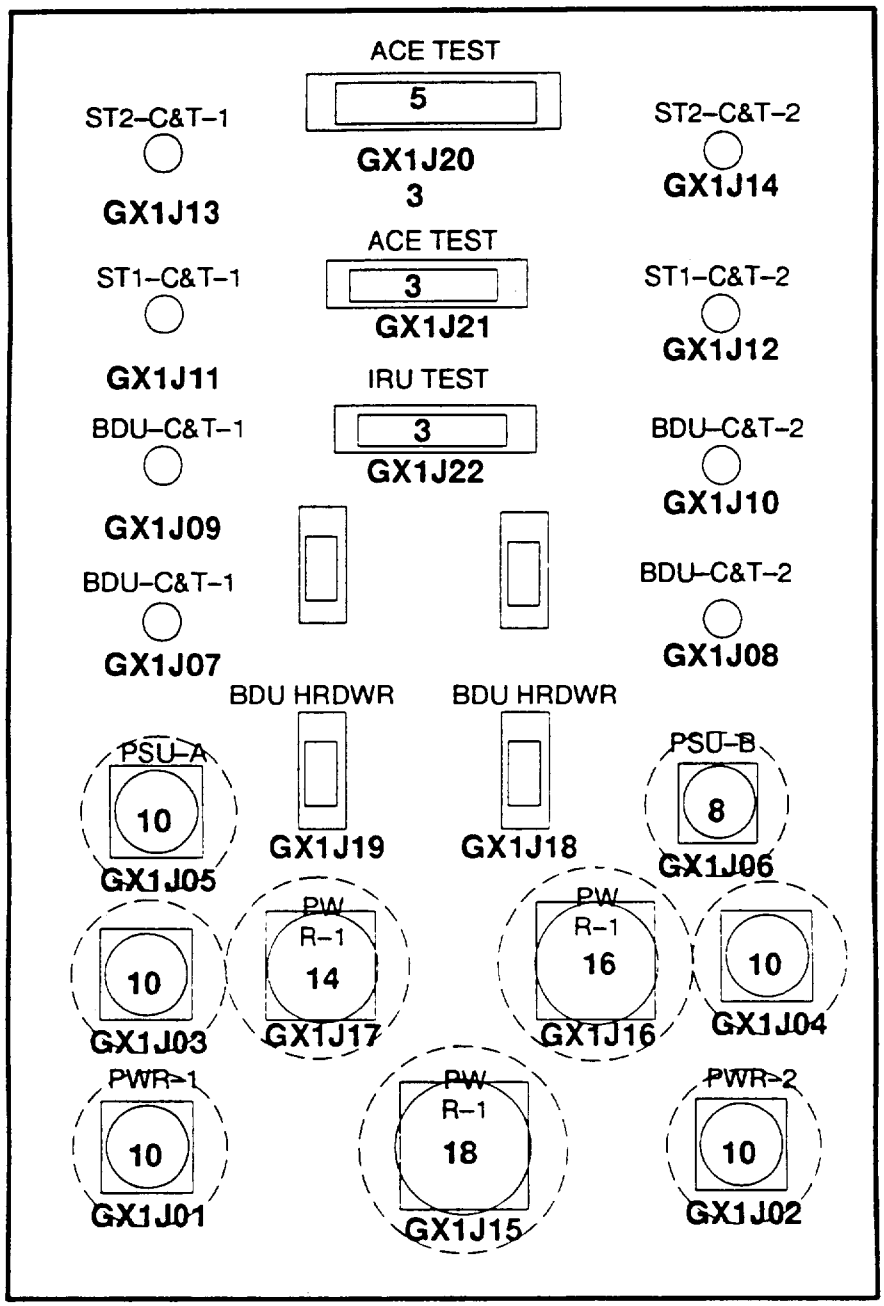

Figure 6. GN&C Sensor EM Interface Bracket

Replace with Figure 7

Figure 7. GN&C Sensor EM – Z Panel Interface Bracket (Page 1 of 2)

Replace with Figure 7

Figure 7. GN&C Sensor EM – Z Panel Interface Bracket (Page 2 of 2)

Connector Designation: GXJ01 Part Number: 20034844PJ1D18N		Connector Function: Power Input to Sensor EM Connector Type: 18 pin circular (vs. rectangular)	
Contact Number	**Function Name**	**Circuit Category**	**Source / Destination**
	GFDB A 120V POS–1		Power EM PDU / SensorEM FDB
	GFDB A 120V RTN–1		Power EM PDU / SensorEM FDB
	GFDB A 120V POS–2		Power EM PDU / SensorEM FDB
	GFDB A 120V RTN–2		Power EM PDU / SensorEM FDB
	GEM FAULT GND A		Power EM PDU / SensorEM FDB

Connector Designation: GXJ02 Part Number: 20034844PJ1D18A		Connector Function: Power Input to Sensor EM Connector Type: 18 pin circular	
Contact Number	**Function Name**	**Circuit Category**	**Source / Destination**
	GFDB B 120V POS–1		Power EM PDU / SensorEM FDB
	GFDB B 120V RTN–1		Power EM PDU / SensorEM FDB
	GFDB B 120V POS–2		Power EM PDU / SensorEM FDB
	GFDB B 120V RTN–2		Power EM PDU / SensorEM FDB
	GEM FAULT GND B		Power EM PDU / SensorEM FDB

Connector Designation: GXJ03 Part Number: 20034844PJ1B35N		Connector Function: 28V POWER TO MTR Connector Type: 13 pin rectangular	
Contact Number	**Function Name**	**Circuit Category**	**Source / Destination**
	MTR X DR A (+)		ACE / MTR
	MTR X DR A (–)		ACE / MTR
	MTR Y DR A (+)		ACE / MTR

Connector Designation: GXJ03 Part Number: 20034844PJ1B35N		Connector Function: 28V POWER TO MTR Connector Type: 13 pin rectangular	
Contact Number	**Function Name**	**Circuit Category**	**Source / Destination**
	MTR Y DR A (–)		ACE / MTR
	MTR Z DR A (+)		ACE / MTR
	MTR Z DR A (–)		ACE / MTR

Connector Designation: GXJ04 Part Number: 20034844PJ1B35A		Connector Function: 28V POWER TO MTR Connector Type: 13 pin rectangular	
Contact Number	**Function Name**	**Circuit Category**	**Source / Destination**
	MTR X DR B (+)		ACE / MTR
	MTR X DR B (–)		ACE / MTR
	MTR Y DR B (+)		ACE / MTR
	MTR Y DR B (–)		ACE / MTR
	MTR Z DR B (+)		ACE / MTR
	MTR Z DR B (–)		ACE / MTR

Connector Designation: GXJ05 Part Number: 20034844PJ1B35N		Connector Function: Power Input to Earth Sensor Electronics And Fine Sun Sensor Electronics Connector Type: 13 pin circular	
Contact Number	**Function Name**	**Circuit Category**	**Source / Destination**
	ESE 1 28V POS–1		PSU / ESE
	ESE 1 28V RTN–1		PSU / ESE
	ESE 1 28V POS–2		PSU / ESE
	ESE 1 28V RTN–2		PSU / ESE
	ESE 1 Chas GND		PSU / ESE
	FSSE 28V POS–1		PSU / FSSE
	FSSE 28V RTN–1		PSU / FSSE
	FSSE 28V POS–2		PSU / FSSE
	FSSE 28V RTN–2		PSU / FSSE
	FSSE Chas GND		PSU / FSSE

Connector Designation: GXJ06 Part Number: 20034844PJ1A35N		Connector Function: Power Input to Earth Sensor Connector Type: 6 pin circular	
Contact Number	**Function Name**	**Circuit Category**	**Source / Destination**
	ESE 2 28V POS–2		PSU / ESE
	ESE 2 28V RTN–1		PSU / ESE
	ESE 2 28V POS–2		PSU / ESE
	ESE 2 28V RTN–2		PSU / ESE
	ESE 2 Chas GND		PSU / ESE

Connector Designation: GXJ07 Part Number: 20040889P1		Connector Function: 1553 DATA BUS Connector Type: Triaxial circular	
Contact Number	**Function Name**	**Circuit Category**	**Source / Destination**
Center Intermediate Outer Shell	GC&T Bus A Stub 1		CTIU / BDU

Connector Designation: GXJ08 Part Number: 20040889P1		Connector Function: 1553 DATA BUS Connector Type: Triaxial circular	
Contact Number	**Function Name**	**Circuit Category**	**Source / Destination**
Center Intermediate Outer Shell	GC&T Bus B Stub 1		CTIU / BDU

Connector Designation: GXJ09 Part Number: 20040889P1		Connector Function: 1553 DATA BUS Connector Type: Triaxial circular	
Contact Number	**Function Name**	**Circuit Category**	**Source / Destination**
Center Intermediate Outer Shell	GC&T Bus A Stub 2		CTIU / BDU

Connector Designation: GXJ10 Part Number: 20040889P1		Connector Function: 1553 DATA BUS Connector Type: Triaxial circular	
Contact Number	**Function Name**	**Circuit Category**	**Source / Destination**
Center Intermediate Outer Shell	GC&T Bus B Stub 2		CTIU / BDU

Connector Designation: GXJ11 Part Number: 20040889P1		Connector Function: 1553 DATA BUS Connector Type: Triaxial circular	
Contact Number	**Function Name**	**Circuit Category**	**Source / Destination**
Center Intermediate Outer Shell	SSST1 C&T Bus A Stub 1		CTIU / SSST1

Connector Designation: GXJ12 Part Number: 20040889P1		Connector Function: 1553 DATA BUS Connector Type: Triaxial circular	
Contact Number	**Function Name**	**Circuit Category**	**Source / Destination**
Center Intermediate Outer Shell	SSST2 C&T Bus A Stub 1		CTIU / SSST2

Connector Designation: GXJ13 Part Number: 20040889P1		Connector Function: 1553 DATA BUS Connector Type: Triaxial circular	
Contact Number	**Function Name**	**Circuit Category**	**Source / Destination**
Center Intermediate Outer Shell	SSST1 C&T Bus A Stub 2		CTIU / SSST1

Connector Designation: GXJ14 Part Number: 20040889P1		Connector Function: 1553 DATA BUS Connector Type: Triaxial circular	
Contact Number	**Function Name**	**Circuit Category**	**Source / Destination**
Center Intermediate Outer Shell	SSST2 C&T Bus A Stub 2		CTIU / SSST2

Connector Designation: GXJ15 Part Number: 20034844PJ1F35N		Connector Function: RWA DRIVE TACH SIGNAL STATUS Connector Type: 66 pin circular	
Contact Number	**Function Name**	**Circuit Category**	**Source / Destination**
	15V RWA1 TACH A		ACE / RWA
	15V RWA1 TACH A RTN		ACE / RWA
	15V RWA1 TACH B		ACE / RWA
	15V RWA1 TACH B RTN		ACE / RWA
	RWA1 CASE GND–1		
	RWA1 TACH A1 PLS		RWA / ACE
	RWA1 TACH A1 PLS RTN		RWA / ACE
	RWA1 TACH A2 PLS		RWA / ACE
	RWA1 TACH A2 PLS RTN		RWA / ACE
	RWA1 TACH B1 PLS		RWA / ACE
	RWA1 TACH B1 PLS RTN		RWA / ACE
	RWA1 TACH B2 PLS		RWA / ACE
	RWA1 TACH B2 PLS RTN		RWA /ACE
	RWA1 CASE GND–2		
	15V RWA2 TACH A		ACE / RWA
	15V RWA2 TACH A RTN		ACE / RWA
	15V RWA2 TACH B		ACE / RWA
	15V RWA2 TACH B RTN		ACE / RWA

Connector Designation: GXJ15 Part Number: 20034844PJ1F35N (Continued)		Connector Function: RWA DRIVE TACH SIGNAL STATUS Connector Type: 66 pin circular	
Contact Number	**Function Name**	**Circuit Category**	**Source / Destination**
	RWA2 CASE GND–1		
	RWA2 TACH A1 PLS		RWA / ACE
	RWA2 TACH A1 PLS RTN		RWA / ACE
	RWA2 TACH A2 PLS		RWA / ACE
	RWA2 TACH A2 PLS RTN		RWA / ACE
	RWA2 TACH B1 PLS		RWA / ACE
	RWA2 TACH B1 PLS RTN		RWA / ACE
	RWA2 TACH B2 PLS		RWA / ACE
	RWA2 TACH B2 PLS RTN		RWA / ACE
	RWA2 CASE GND–2		
	15V RWA3 TACH A		ACE / RWA
	15V RWA3 TACH A RTN		ACE / RWA
	15V RWA3 TACH B		ACE / RWA
	15V RWA3 TACH B RTN		ACE / RWA
	RWA3 CASE GND–1		RWA / ACE
	RWA3 TACH A1 PLS		RWA / ACE
	RWA3 TACH A1 PLS RTN		RWA / ACE
	RWA3 TACH A2 PLS		RWA / ACE
	RWA3 TACH A2 PLS RTN		RWA / ACE
	RWA3 TACH B1 PLS		RWA / ACE
	RWA3 TACH B1 PLS RTN		RWA / ACE
	RWA3 TACH B2 PLS		RWA / ACE
	RWA3 TACH B2 PLS RTN		RWA / ACE

Connector Designation: GXJ15 Part Number: 20034844PJ1F35N (Continued)		Connector Function: RWA DRIVE TACH SIGNAL STATUS Connector Type: 66 pin circular	
Contact Number	**Function Name**	**Circuit Category**	**Source / Destination**
	RWA3 CASE GND–2		
	15V RWA4 TACH A		ACE / RWA
	15V RWA4 TACH A RTN		ACE / RWA
	15V RWA4 TACH B		ACE / RWA
	15V RWA4 TACH B RTN		ACE / RWA
	RWA4 CASE GND–1		RWA / ACE
	RWA4 TACH A1 PLS		RWA / ACE
	RWA4 TACH A1 PLS RTN		RWA / ACE
	RWA4 TACH A2 PLS		RWA / ACE
	RWA4 TACH A2 PLS RTN		RWA / ACE
	RWA4 TACH B1 PLS		RWA / ACE
	RWA4 TACH B1 PLS RTN		RWA / ACE
	RWA4 TACH B2 PLS		RWA / ACE
	RWA4 TACH B2 PLS RTN		RWA / ACE
	RWA4 CASE GND–2		

Connector Designation: GXJ16 Part Number: 20034844PJ1E35N		Connector Function: ACE I/F TO ADE, PMEA, AND ILV Connector Type: 55 pin circular	
Contact Number	**Function Name**	**Circuit Category**	**Source / Destination**
	YCSS1 ANLG (ADE)		ACE / ADE
	YCSS1 ANLG RTN (ADE)		ACE / ADE
	YCSS2 ANLG (ADE)		ACE / ADE
	YCSS2 ANLG RTN (ADE)		ACE / ADE

Connector Designation: GXJ16 Part Number: 20034844PJ1E35N (Continued)		Connector Function: ACE I/F TO ADE, PMEA, AND ILV Connector Type: 55 pin circular	
Contact Number	**Function Name**	**Circuit Category**	**Source / Destination**
	SAFEMODE ADE A		ACE / ADE
	SAFEMODE ADE A RTN		ACE / ADE
	SAFEMODE ADE B		ACE / ADE
	SAFEMODE ADE B RTN		ACE / ADE
	S/A INDEX SW A		ADE / ACE
	S/A INDEX SW B		ADE / ACE
	S/A INDEX SW A RTN		ADE / ACE
	S/A INDEX SW B RTN		ADE / ACE
	SAFEMODE SPARE A		
	SAFEMODE SPARE A RTN		
	SAFEMODE SPARE B		
	SAFEMODE SPARE B RTN		
	ACS ENA SW1		ILV / ACE
	ACS ENA SW1 RTN		ILV / ACE
	ACS ENA SW2		ILV / ACE
	ACS ENA SW2 RTN		ILV ACE
	SAFEMODE PMEA A		ACE / PMEA
	SAFEMODE PMEA A RTN		ACE / PMEA
	CMD ENA PMEA A		ACE / PMEA
	CMD ENA PMEA A RTN		ACE / PMEA
	CMD DATA PMEA A		ACE / PMEA
	CMD DATA PMEA A RTN		ACE / PMEA
	CMD CLK PMEA A		ACE / PMEA
	CMD CLK PMEA A RTN		ACE / PMEA

Connector Designation: GXJ16 Part Number: 20034844PJ1E35N (Continued)		Connector Function: ACE I/F TO ADE, PMEA, AND ILV Connector Type: 55 pin circular	
Contact Number	**Function Name**	**Circuit Category**	**Source / Destination**
	ACE CGP A		ACE / PMEA
	SAFEMODE PMEA B		ACE / PMEA
	SAFEMODE PMEA B RTN		ACE / PMEA
	CMD ENA PMEA B		ACE / PMEA
	CMD ENA PMEA B RTN		ACE / PMEA
	CMD DATA PMEA B		ACE / PMEA
	CMD DATA PMEA B RTN		ACE / PMEA
	CMD CLK PMEA B		ACE / PMEA
	CMD CLK PMEA B RTN		ACE / PMEA
	ACE CGP B		

Connector Designation: GXJ17 Part Number: 20034844PJ1D35N		Connector Function: RWA CONTROL AND SENSOR (CSS AND ESA) INPUTS TO ACE Connector Type: 37 pin circular	
Contact Number	**Function Name**	**Circuit Category**	**Source / Destination**
	RWA1 ANLG CTRL SIG		ACE / RWA
	RWA1 ANLG CTRL RTN		ACE / RWA
	RWA1 PWR STATUS		RWA / ACE
	RWA2 ANLG CTRL SIG		ACE / RWA
	RWA2 ANLG CTRL RTN		ACE / RWA
	RWA2 PWR STATUS		RWA / ACE
	RWA3 ANLG CTRL SIG		ACE / RWA
	RWA3 ANLG CTRL RTN		ACE / RWA
	RWA3 PWR STATUS		RWA / ACE

Connector Designation: GXJ17 Part Number: 20034844PJ1D35N (Continued)		Connector Function: RWA CONTROL AND SENSOR (CSS AND ESA) INPUTS TO ACE Connector Type: 37 pin circular	
Contact Number	**Function Name**	**Circuit Category**	**Source / Destination**
	RWA4 ANLG CTRL SIG		ACE / RWA
	RWA4 ANLG CTRL RTN		ACE / RWA
	RWA4 PWR STATUS		RWA / ACE
	CSS PITCH A POSN RTN		CSS / ACE
	CSS PITCH A POSN SIG		CSS / ACE
	CSS YAW A POSN RTN		CSS / ACE
	CSS YAW A POSN SIG		CSS / ACE
	CSS PITCH B POSN RTN		CSS / ACE
	CSS PITCH B POSN SIG		CSS / ACE
	CSS YAW B POSN RTN		CSS / ACE
	CSS YAW B POSN SIG		CSS / ACE
	CSS YAW A POS(BODY) SIG		CSS / ACE
	CSS YAW A POS(BODY) SIG		CSS / ACE
	CSS YAW A POS(BODY) SIG		CSS / ACE
	CSS YAW A POS(BODY) SIG		CSS / ACE
	ESA1 XM POSN SIG		ESA / ACE
	ESA1 YM POSN SIG		ESA / ACE
	ESA1 SIG RTN		ESA / ACE
	ESA2 XM POSN SIG		ESA / ACE
	ESA2 YM POSN SIG		ESA / ACE
	ESA 2 SIG RTN		ESA / ACE

Connector Designation: GXJ18 Part Number: 20042415P1009PA		Connector Function: GN&C BDU B On/Off Commands Connector Type: 9 pin rectangular	
Contact Number	**Function Name**	**Circuit Category**	**Source / Destination**
	GBDU B ON CMD		CTIU / SensorEM BDU B
	GBDU B ON CMD RTN		CTIU / SensorEM BDU B
	GBDU B OFF CMD		CTIU / SensorEM BDU B
	GBDU B OFF CMD RTN		CTIU / SensorEM BDU B

Connector Designation: GXJ19 Part Number: 20042415P1009PA		Connector Function: GN&C BDU A On/Off Commands Connector Type: 9 pin rectangular	
Contact Number	**Function Name**	**Circuit Category**	**Source / Destination**
	GBDU A ON CMD		CTIU / SensorEM BDU A
	GBDU A ON CMD RTN		CTIU / SensorEM BDU A
	GBDU A OFF CMD		CTIU / SensorEM BDU A
	GBDU A OFF CMD RTN		CTIU / SensorEM BDU A

Connector Designation: GXJ22 Part Number: 20042415P1025PA		Connector Function: IRU TEST INPUTS Connector Type: 25 pin (vs. socket) rectangular D	
Contact Number	**Function Name**	**Circuit Category**	**Source / Destination**
	IRU CH A XM2 TORQ HI		TEST / IRU
	IRU CH A XM2 TORQ LO		TEST / IRU
	IRU CH A ZM2 TORQ HI		TEST / IRU
	IRU CH A ZM2 TORQ LO		TEST / IRU
	IRU CH A TORQUER SHLD		TEST / IRU
	IRU CH B XM2 TORQ HI		TEST / IRU

Connector Designation: GXJ22 Part Number: 20042415P1025PA (Continued)		Connector Function: IRU TEST INPUTS Connector Type: 25 pin (vs. socket) rectangular D	
Contact Number	**Function Name**	**Circuit Category**	**Source / Destination**
	IRU CH B XM2 TORQ LO		TEST / IRU
	IRU CH B ZM2 TORQ HI		TEST / IRU
	IRU CH B ZM2 TORQ LO		TEST / IRU
	IRU CH B TORQUER SHLD		TEST / IRU
	IRU CH C XM2 TORQ H		TEST / IRU
	IRU CH C XM2 TORQ LO		TEST / IRU
	IRU CH C ZM2 TORQ HI		TEST / IRU
	IRU CH C ZM2 TORQ LO		TEST / IRU
	IRU CH C TORQUER SHLD		TEST / IRU

Connector Designation: GXJ20 Part Number: 20042415P1078PB		Connector Function: ACE TEST POINTS Connector Type: 78 pin rectangular	
Contact Number	**Function Name**	**Circuit Category**	**Source / Destination**
	+28 VDC A/B MON		ACE
	ACE A –15V MON		ACE
	ACE A/B +15V MON		ACE
	ACE A/B –15V MON		ACE
	ACE ANLG RTN 1		ACE
	ACE ANLG RTN 2		ACE
	ACE B –15VDC MON		ACE
	CSS1 YA		ACE
	CSS1 ZA		ACE
	CSS2 YA		ACE

Connector Designation: GXJ20 Part Number: 20042415P1078PB		Connector Function: ACE TEST POINTS Connector Type: 78 pin rectangular	
Contact Number	**Function Name**	**Circuit Category**	**Source / Destination**
	CSS2 ZA		ACE
	ES1 X		ACE
	ES1 Y		ACE
	ES2 X		ACE
	IRU XM POSN ACE A		ACE
	IRU XM POSN ACE B		ACE
	IRU XM RATE ACE A		ACE
	IRU XM RATE ACE B		ACE
	IRU YM POSN ACE A		ACE
	IRU YM POSN ACE B		ACE
	IRU YM RATE ACE A		ACE
	IRU YM RATE ACE B		ACE
	IRU ZM POSN ACE A		ACE
	IRU ZM POSN ACE B		ACE
	IRU ZM RATE ACE A		ACE
	IRU ZM RATE ACE B		ACE
	MTR XA CTRL		ACE
	MTR XA DR		ACE
	MTR XB CTRL		ACE
	MTR XB DR		ACE
	MTR YA CTRL		ACE
	MTR YA DR		ACE
	MTR YB CTRL		ACE
	MTR YB DR		ACE
	MTR ZA CTRL		ACE
	MTR ZA DR		ACE
	MTR ZB CTRL		ACE
	MTR ZB DR		ACE

Connector Designation: GXJ21 Part Number: 20042415P1044PB		Connector Function: ACE TEST POINTS Connector Type: 44 pin rectangular	
Contact Number	**Function Name**	**Circuit Category**	**Source / Destination**
	RWA1 ANLG TACH A		ACE
	RWA1 ANLG TACH B		ACE
	RWA2 ANLG TACH A		ACE
	RWA2 ANLG TACH B		ACE
	RWA3 ANLG TACH A		ACE
	RWA3 ANLG TACH B		ACE
	SHDP A RWA1 CTRL		ACE
	SHDP A RWA2 CTRL		ACE
	SHDP A RWA3 CTRL		ACE
	SHDP B RWA3 CTRL		ACE
	SHDP B RWA1 CTRL		ACE
	SHDP B RWA2 CTRL		ACE
	TAM 1/2 X SHE A		ACE
	TAM 1/2 X SHE B		ACE
	TAM 1/2 Y SHE A		ACE
	TAM 1/2 Y SHE B		ACE
	TAM 1/2 Z SHE A		ACE
	TAM 1/2 Z SHE B		ACE
	XM POSN CTRL A		ACE
	XM POSN CTRL B		ACE
	YM POSN CTRL A		ACE
	YM POSN CTRL B		ACE
	ZM POSN CTRL A		ACE
	ZM POSN CTRL B		ACE
	ACE A/B +5V MON		ACE
	ACE A/B +5V RTN		ACE
	ACE DIG GND		ACE
	ACE GNC CGP		ACE
	CSM PLS TRAIN A		ACE
	CSM PLS TRAIN B		ACE

Connector Designation: GXJ21 Part Number: 20042415P1044PB (Continued)		Connector Function: ACE TEST POINTS Connector Type: 44 pin rectangular	
Contact Number	**Function Name**	**Circuit Category**	**Source / Destination**
	ES2 Y		ACE
	GNC CGP		ACE
	RWA1 TACH A1 PLS		ACE
	RWA1 TACH A2 PLS		ACE
	RWA1 TACH B1 PLS		ACE
	RWA1 TACH B2 PLS		ACE
	RWA2 TACH A1 PLS		ACE
	RWA2 TACH A2 PLS		ACE
	RWA2 TACH B1 PLS		ACE
	RWA2 TACH B2 PLS		ACE
	RWA4 ANLG TACH A		ACE
	RWA4 ANLG TACH B		ACE
	S/A INDEX SIG A		ACE
	S/A INDEX SIG B		ACE
	SHDP RWA4 CTRL		ACE
	SHDP RWA4 CTRL		ACE
	TEST POINT RTN		ACE
	RWA3 TACH A1 PLS		ACE
	RWA3 TACH A2 PLS		ACE
	RWA3 TACH B1 PLS		ACE
	RWA3 TACH B2 PLS		ACE
	RWA4 TACH A1 PLS		ACE
	RWA4 TACH A2 PLS		ACE
	RWA4 TACH B1 PLS		ACE
	RWA4 TACH B2 PLS		ACE

Connector Designation: Part Number:		Connector Function: Connector Type: 6 pin (vs. socket) circular (vs. rectangular)	
Contact Number	**Function Name**	**Circuit Category**	**Source / Destination**
	SSST1 RAW VIDEO TP		
	SSST1 HORIZONTAL DEFLECTION TP		
	SSST1 VERTICAL DEFLECTION TP		
	SSST1 FLAG TEST POINT		
	SSST1 FOCUS CURRENT TEST POINT		
	SSST1 SIGNAL /LOGIC GROUND		
	SSST2 RAW VIDEO TP		
	SSST2 HORIZONTAL DEFLECTION TP		
	SSST2 VERTICAL DEFLECTION TP		
	SSST2 FLAG TEST POINT		
	SSST2 FOCUS CURRENT TEST POINT		
	SSST2 SIGNAL /LOGIC GROUND		

PS20001409
CAGE No. 49671
30 July 1993

Performance Specification
GN&C Reaction Wheel Assembly Equipment Module for EOS–AM Spacecraft
(SP–801)

Prepared under:
Contract NAS5–32500
NASA Goddard Space Flight Center
Greenbelt, Maryland 20771

Prepared by:
Martin Marietta Corporation
Astro Space
P.O. Box 800
Princeton, New Jersey 08543–0800

DCC073093

(This page intentionally left blank.)

REVISION LOG

This log identifies those portions of this document which have been revised since the original issue. Revised portions of each page, for the current revision only, are identified by marginal striping.

Revision	Paragraph Number(s) Affected	Rev. Date	Approval
Initial Issue		07/30/93	CM/GSR

(This page intentionally left blank.)

TABLE OF CONTENTS

SECTION / PARAGRAPH	TITLE	PAGE
1	SCOPE	1
2	APPLICABLE DOCUMENTS	3
2.1	Government Documents	3
2.1.1	Military	3
2.1.2	NASA	3
2.2	Martin Marietta Astro Space Documents	4
2.2.1	Specifications	4
2.2.2	Standards	5
2.2.3	Drawings	5
2.2.4	Other Publications	5
3	REQUIREMENTS	7
3.1	RWA Equipment Module Description	7
3.1.1	RWA Equipment Module Functional Description	7
3.1.2	Interface Definition	9
3.1.2.1	Electrical	9
3.1.2.2	Command and Telemetry Interfaces	12
3.1.2.3	Mechanical	12
3.1.2.4	Thermal	14
3.1.3	Major Component List	14
3.2	Characteristics	15
3.2.1	Performance	15
3.2.2	Physical Characteristics	15
3.2.2.1	Weight	15
3.2.2.2	Power Consumption	15
3.2.2.3	Power Dissipation	16
3.2.2.4	Dimension	16
3.2.2.5	Transport and Storage	16
3.2.2.6	Integration and Test	16

TABLE OF CONTENTS (Continued)

SECTION / PARAGRAPH	TITLE	PAGE
3.2.2.7	Layout	17
3.2.2.8	Configuration	17
3.2.2.9	Natural Frequency	17
3.2.2.10	Alignment	17
3.2.3	Reliability	18
3.2.4	Durability	18
3.2.5	Maintainability	18
3.2.6	Environmental Conditions	18
3.2.6.1	General	18
3.2.6.2	Sine Vibration	18
3.2.7	Transportability	19
3.3	Design and Construction	19
3.3.1	Materials, Processes, and Parts	19
3.3.2	Electric Fields	19
3.3.3	Magnetic Fields	19
3.3.4	Nameplates and Product Marking	20
3.3.5	Workmanship	20
3.3.6	Safety	20
3.3.7	Human Performance/Human Engineering	21
3.4	Documentation	21
3.4.1	Specifications	21
3.4.2	Drawings	21
3.4.3	Test Plans and Procedures	21
3.5	Precedence	21
4	QUALITY ASSURANCE PROVISIONS	23
4.1	General	23
4.1.1	Responsibility for Tests	23
4.1.2	Special Tests and Examinations	23
4.1.3	Reliability Test	23

TABLE OF CONTENTS (Continued)

SECTION / PARAGRAPH	TITLE	PAGE
4.1.4	Engineering Evaluation and Test	23
4.1.5	Protoflight Test	23
4.1.6	Installation Test and Checkout	24
4.1.6.1	Electrical Integration and Checkout (EIC)	24
4.1.6.2	Interface Unit Functional Test (FT)	25
4.1.6.3	Comprehensive Performance Test (CPT)	25
4.1.6.4	Interface Verification Test (IVT)	25
4.1.7	Formal Test Verification	25
4.2	Quality Conformance Inspections	25
4.2.1	Method of Verification	25
4.2.1.1	Inspection	25
4.2.1.2	Analysis	26
4.2.1.3	Demonstration	26
4.2.1.4	Test	26
4.2.1.5	Classification of Characteristics	26
4.2.1.6	Test Equipment	26
5	PREPARATION FOR DELIVERY	29
5.1	General	28
6	NOTES	31
6.1	Definitions	31
6.2	Abbreviations and Acronyms	31
6.3	Exceptions to the GIS and GIIS	32
6.4	Requirements Traceability Matrix	32

APPENDIX I

10	RWA EM ELECTRICAL CONNECTOR CONTACT ASSIGNMENTS	33

LIST OF FIGURES

FIGURE	TITLE	PAGE
1	Reaction Wheel Assembly Equipment Module Functional Block Diagram	8
2	RWA Equipment Module Layout	10
3	Reaction Wheel Assembly Equipment Module Component Interconnection Diagram	11
4	RWA EM Command and Telemetry Bus Connection Diagram	13
5	RWA EM Integration And Test Flow	24
6	RWA EM Interface Bracket	34

LIST OF TABLES

TABLE	TITLE	PAGE
I	RWA Equipment Module Subsystem Functions	7
II	RWA Equipment Module Components	14
III	RWA EM Power Consumption	15

TBD LOG

ITEM	SECTION	PAGE	SUBJECT	RESP.	DUE
TBD–1	Table III	15	RWA Heater Power Consumption	C. Scott	12/93
TBD–2	3.2.2.6	17	Ground Cooling of EM	C.Scott/E.Shade	12/93
TBD–3	3.2.2.10	17	Assembly Drawing	B. Queen	5/94
TBD–4	Appendix I	33	Contact Number Assignments	S. Holaday	3/94
TBD–5	Appendix I	33	Circuit Categories	S. Holaday	9/30/93

1 SCOPE

This specification establishes the performance, design, development, and test requirements for the Reaction Wheel Assembly Equipment Module (EM) Critical Item. The Reaction Wheel Assembly EM shall meet all the applicable requirements of the Contract End Item (CEI) Specification for the EOS Spacecraft, PS20005396 (SEP–101), throughout its design life. The principal requirement of modularity to facilitate Spacecraft construction, maintenance and serviceability is satisfied by this module design. The equipment module will be designed to facilitate producibility, integration, and accessibility to the internal components while minimizing weight. The equipment module will be modular to allow on–ground removal and replacement onto the Spacecraft core.

(This page intentionally left blank.)

2 APPLICABLE DOCUMENTS

All and only those documents referenced in Sections 3, 4, 5 and Appendices of the specification shall be listed in Section 2 of the specification. References are confined to documents currently available at the time of issuance of the current revision of this specification.

2.1 Government Documents

The following documents of the exact issue shown, form a part of this specification to the extent specified herein. In the event of conflict between the documents referenced herein and the contents of this specification, the contents of this specification shall take precedence, except as defined in Section 3.6 herein.

2.1.1 Military

MSFC–SPEC–522	Design Criteria for Controlling Stress Corrosion
MIL–STD–889 (Rev. B) 4 March 1988	Dissimilar Metals
MIL–STD–1553 (Rev. B) 8 September 86	Digital Time Division Command/Response Multiplex Data Bus
MIL–STD–1472 (Rev. D) 20 March 1991	Human Engineering Design Criteria for Military Systems, Equipment, and Facilities
WSMCR–127–1 December 1989	Western space and Missile Center Range Safety Regulations

2.1.2 NASA

420–03–02 15 April 1992	General Instrument Interface Specification (GIS)
420–05–02 8 November 1991	Performance Assurance Requirements for the EOS Observatories (PAR)
421–10–01 1 May 1992	Requirements Document for the EOS AM Spacecraft (RD)
NHB 5300.4 (3A–1) December 1976	Requirements for Soldered Electrical Connections
NHB 5300.4 (3G) April 1985	Requirements for Interconnecting Cables, Harnesses and Wiring
NHB 5300.4 (3H) May 1984	Requirements for Crimping and Wire Wrap

NHB 5300.4 (3I) May 1984	Requirements for Printed Wiring Boards
NHB 5300.4 (3J) April 1985	Requirements for Conformal Coating and Staking of Printed Wiring Boards and Electronic Assemblies
NHB 5300.4 (3K)	Design Requirements for Rigid Printed Wiring Boards and Assemblies

2.2 Martin Marietta Astro Space Documents

Unless otherwise specified, the following documents of the latest issue form a part of this specification to the extent specified herein. In the event of conflict between the documents referenced herein and the contents of this specification, the contents of this specification shall be considered a superceding requirement, except for higher tier documents.

2.2.1 Specifications

IS20008501	General Interface Specification for the Earth Observing System, ICD–101
PN20001409	Reaction Wheel Assembly Module Test Plan
PN20001412	EOS–A Spacecraft Contamination Control Plan (SEP–107)
PN20005397	EOS Performance Assurance Implementation Plan (PAIP) (PA–100)
PN20005404	Verification Plan for the Earth Observing System, VRD–100
PN20005869	EOS EMC Control Plan, SEP–106
PN20008664	Comprehensive Test Plan for the EOS–AM Spacecraft, VRD–105
PS20001415	Structures and Mechanisms Subsystem (SMS) Performance Specification, SP–101
PS20001423	Reaction Wheel Assembly Critical Item Development Specification, SP–602
PS20004937	Guidance, Navigation and Control Subsystem Specification, SP–601
PS20005396	EOS–AM Spacecraft Contract End Item Specification, SEP–101

PS20005404	Verification Specification for the Earth Observing System, VRD–110
PS20008549	Thermal Control Subsystem Performance Specification, SP–201
PS20008550	Heater Control Electronics, SP–202
PS20008568	Bus Data Unit Performance Specification, SP–302
PS20008636	Electrical Accommodation Subsystem Performance Specification, SP–741
PS20008678	Thermal Blanket Performance Specification
PS20008694	Fuse Distribution Board Performance Specification, SP–502
PS20034900	GN&C Attitude Control Electronics Performance Specification
Source:	Martin Marietta Astro Space P. O. Box 800 Princeton, NJ 08543–0800

2.2.2 Standards

S32534 (Rev. E)	Identification Marking
Source:	Martin Marietta Astro Space P. O. Box 800 Princeton, NJ 08543–0800

2.2.3 Drawings

20001400	Kinematic Mounts
20001430	Ground Support Equipment Requirements Document (SEP–104)
20008904–20008909	RWA Equipment Module Assembly Drawings
Source:	Martin Marietta Astro Space P. O. Box 800 Princeton, NJ 08543–0800

2.2.4 Other Publications

20005397 18 March 1991	Performance Assurance Implementation Plan, PA–100

20008536 14 May 1992	EOS–AM Spacecraft Specification Tree
20008540 31 July 1992	Logistics Plan, OPD–910
20008648 10 March 1992	EOS Program Approved Parts List, PA–325
20008650 10 March 1992	EOS Program Approved Materials and Processes List, PA–460
PN20001409	RWA Equipment Module Test Plan
Source:	Martin Marietta Astro Space P. O. Box 800 Princeton, NJ 08543–0800

3 REQUIREMENTS

The Reaction Wheel Assembly Equipment Module shall meet all performance requirements specified herein under all combinations of environmental conditions and input signals described below and after exposure to the launch environment described herein. All requirements are end–of–life (EOL) specifications unless stated otherwise.

3.1 RWA Equipment Module Description

The RWA Equipment Module contains elements of several Spacecraft subsystems. These subsystems and their major functions performed within the EM are described in Table I.

Table I. RWA Equipment Module Subsystem Functions

Subsystem and Performance Specification	Major EM Subsystem Functions
Command and Data Handling Subsystem (C&DH) PS20008567	– Provides data bus for EM component command and telemetry via BDU
Electrical Accommodations Subsystem (EAS) PS20008636	– Provides analog drive signals to RWA from the Attitude Control Electronics (ACE) located in the GN&C Sensor EM – Provides power to RWA tachometer from the ACE – Provides fused 120 volt power for the RWAs from the PSU located in the GN&C Sensor EM – Provides digital RWA tachometer pulses to the ACE
Electrical Power Subsystem (EPS) PS20004749	– Provides 120 volt power from the Spacecraft power bus – Provides power distribution and fusing for 120 volt EM components via the Fuse Distribution Box (FDB)
Thermal Control Subsystem (TCS) PS20008549	– Provides active thermal control via heaters and control electronics – Provides passive thermal control via radiative panels
Structures and Mechanisms Subsystem (SMS) PS20001415	– Provides mounting and alignment control for all EM components

A functional block diagram of the RWA EM is shown in Figure 1.

3.1.1 RWA Equipment Module Functional Description

The RWA EM provides mounting, alignment, and thermal control for the components associated with the module. It provides electrical interfaces to core spacecraft power, command and data services for the individual components housed in the EM. The RWA EM consists of the equipment

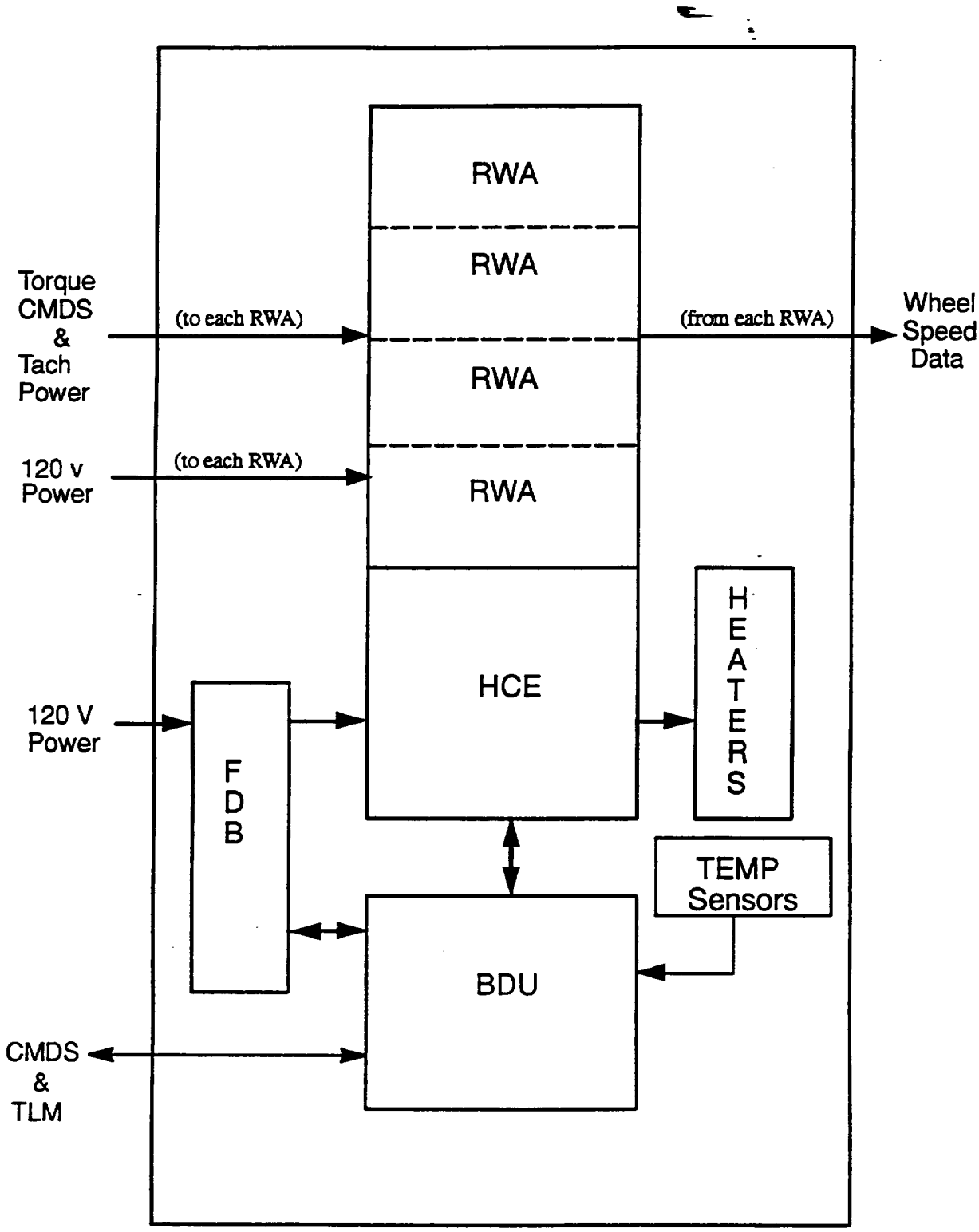

Figure 1. Reaction Wheel Assembly Equipment Module Functional Block Diagram

module panels, a base plate with kinematic mounts, a Fuse Distribution Box (FDB), a Bus Data Unit (BDU), four Reaction Wheel Assemblies (RWAs), temperature sensors, heaters, Heater Control Electronics (HCE), and associated wiring harnesses and thermal blankets. The layout of the RWA EM is shown in Figure 2.

The function of the RWAs is to store momentum and generate torque to control the attitude of the Spacecraft. Each RWA has a different orientation in order to provide momentum management in all three axes with redundancy. The internally redundant BDU provides control and telemetry interfaces for internal EM components. The FDB provides power distribution and fusing to all EM components except the RWAs, which are powered by the Power Switching Unit (PSU) located in the GN&C Sensor Equipment Module. HCEs perform the necessary active thermal control required to maintain EM component temperatures within allowable range.

3.1.2 Interface Definition

The RWA Equipment Module and all included components shall utilize the standard interfaces defined in the General Interface Specification (GIS) for the Earth Observing System, IS20008501. Exceptions must be explicitly noted in either the component Critical Item Development Specifications or this document.

Each component of the RWA EM has detailed interface requirements defined in its respective Critical Item Development Specification. These requirements define the internal interfaces between the components of the RWA EM. An interconnection diagram for the major components of the RWA EM is shown in Figure 3.

3.1.2.1 Electrical

[1] The RWA EM shall comply with the requirements of Section 3 of the GIS, IS20008501, regarding Power Grounds, Standard Signal Interfaces, Test Points, and Connectors and Pin Allocations.

[2] The EM shall also comply with the Electrical Accommodation Subsystem Performance Specification, PS20008636, <u>except for heritage design</u> components which may require special grounding consideration.

[3] All electrical connections between the RWA EM and the Spacecraft shall be accomplished through the use of interconnecting cables as described in the EM Harness Specification, PS20008686.

[4] An electrical interface connector bracket on the –X panel shall support all connectors required to mate to the Spacecraft bus harness and shall be located to facilitate access for integration and test.

[5] The RWA EM shall provide and accept, as appropriate, the signals defined by the connector and contact assignments in Appendix I.

3.1.2.1.1 Power

[1] The RWA EM shall accept 120 Volt, ± 4%, primary power from the Spacecraft Electrical Power Subsystem (EPS), via the EAS, to the FDB. This interface is specified in the FDB Performance Specification, PS20008694.

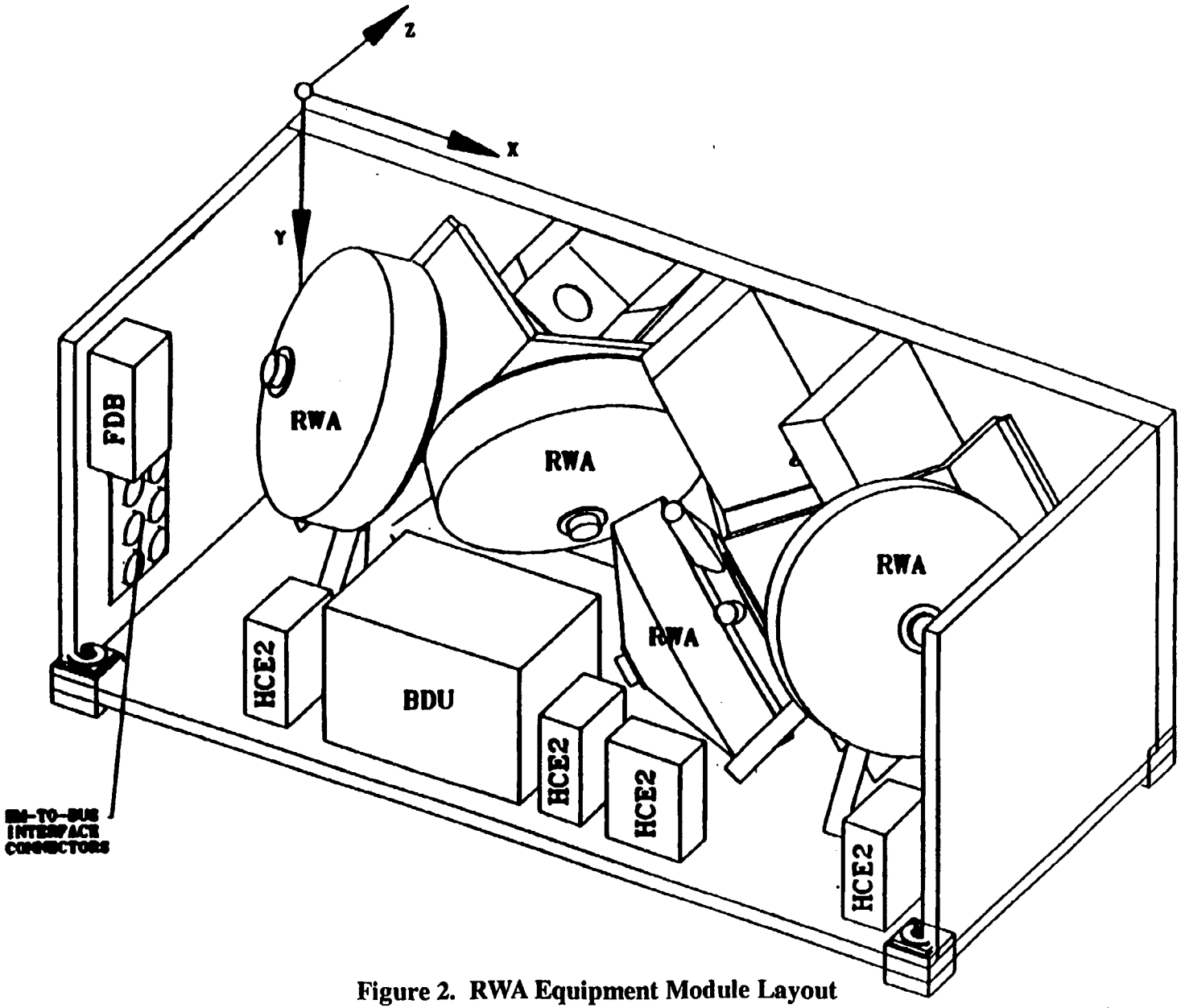

Figure 2. RWA Equipment Module Layout

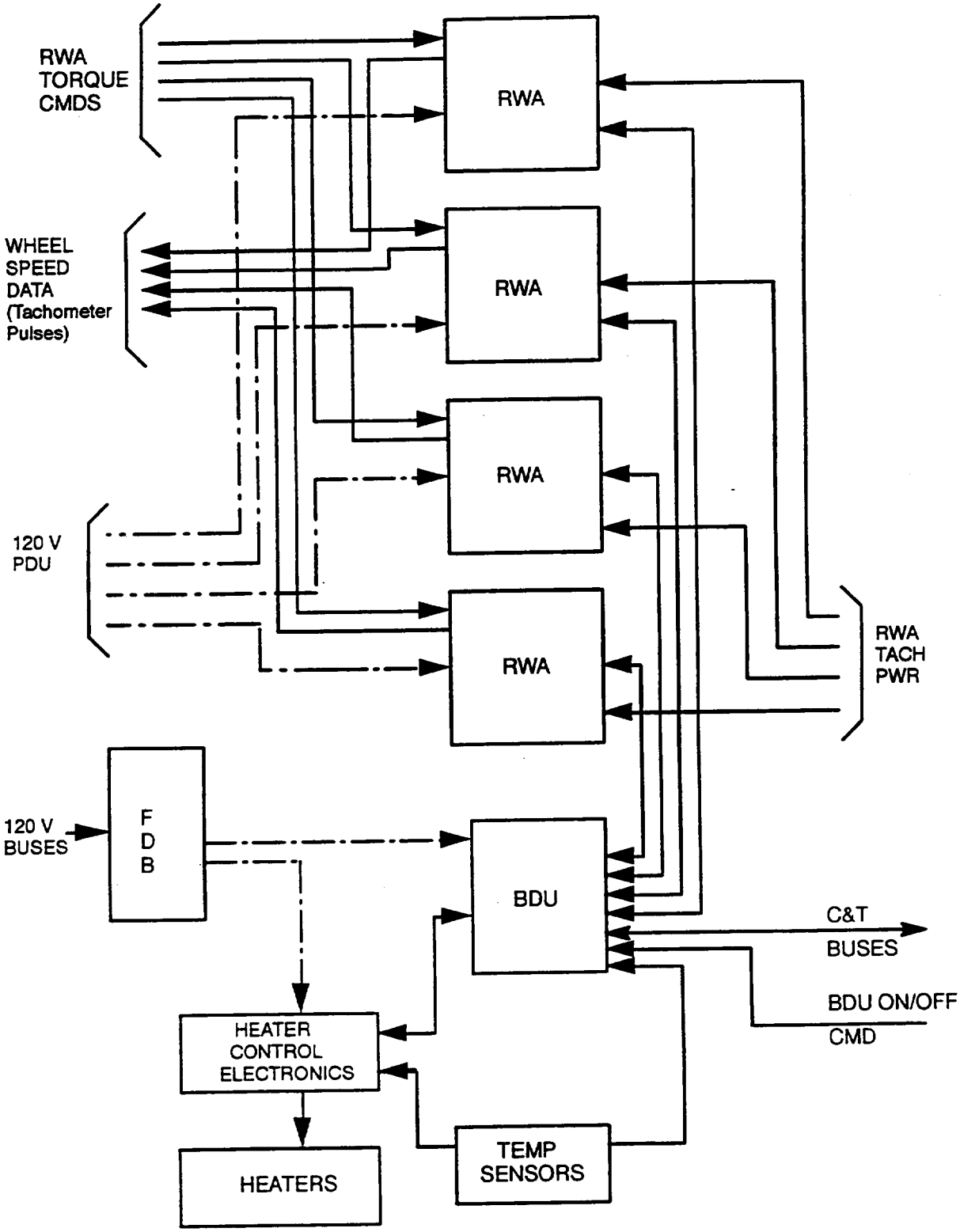

Figure 3. Reaction Wheel Assembly Equipment Module Component Interconnection Diagram

[2] The RWA EM FDB shall connect to both A and B power bus feeds.

[3] Each RWA within the RWA EM shall accept 120 Volt, ±4%, redundant fused power from the PDU.

3.1.2.1.2 Signal

[1] The RWA EM shall accept RWA drive signals from the Attitude Control Electronics (ACE). This interface is defined by the ACE performance Specification, PS20003826, and the RWA Critical Item Development Specification, PS20001423.

[2] The RWA EM shall accept tachometer power inputs from the Attitude Control Electronics (ACE). This interface is defined by the ACE performance Specification, PS20003826, and the RWA Critical Item Development Specification, PS20001423.

[3] The RWA EM shall provide RWA tachometer pulse outputs to the ACE. This interface is defined by the ACE performance Specification, PS20003826, and the RWA Critical Item Development Specification, PS20001423.

[4] The RWA EM shall provide temperature and heater status telemetry to the C&DHS via the BDU.

3.1.2.2 Command and Telemetry Interfaces

The RWA EM contains a BDU which defines the RWA EM command and data interface.

[1] This interface shall be a redundant MIL–STD–1553B bus connected to both the A and B Spacecraft Command and Telemetry busses, as shown in Figure 4.

[2] All command and data connections to the RWA EM shall be in accordance with this Interface as defined by the BDU Performance Specification, PS20008568.

[3] The RWA EM shall accept, and immediately execute, commands from the C&DHS to control configure or reconfigure the RWA EM.

[4] The RWA EM shall provide status data to the C&DHS sufficient to support normal operations, monitor the health and safety of the RWA EM, and for the diagnosis and analysis of anomalies.

3.1.2.2.1 Command Inputs

The function, format and timing of commands for EM components are listed in an appendix to the respective performance specifications for each component.

3.1.2.2.2 Telemetry Outputs

The function, format and timing of telemetry for EM components are listed in an appendix to the respective performance specifications for each component.

3.1.2.3 Mechanical

[1] The EM shall comply with the requirements of Section 4 of the GIS, IS20008501, regarding Coordinate Systems, Physical Characteristics, Design and Construction, Mounting, Alignment, Mechanisms, Dynamic Characteristics, Structural Criteria, and Tooling.

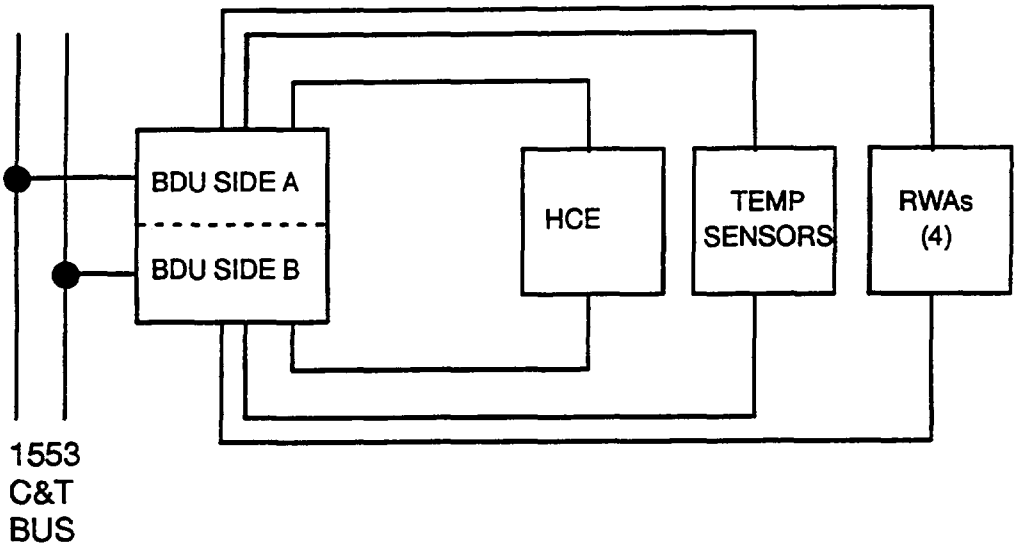

Figure 4. RWA EM Command and Telemetry Bus Connection Diagram

[2] This mechanical interface shall be as defined by the Structure and Mechanism Performance Specification, PS20001415 and the GN&C Sensor Module Assembly Drawing, 20001407.

[3] The EM shall be attached to the primary structure using kinematic mounts to minimize load sharing with the primary structure.

[4] Each set of kinematic mounts shall consist of one 3–axis, one 2–axis, and two single–axis kinematic mounts to provide load paths to the primary spacecraft structure.

[5] This mechanical interface shall be as is defined by Drawing 20001400 and the Structures and Mechanisms Subsystem Performance Specification, PS20001415.

[6] The EM shall have a panel that can be removed to provide access to equipment contained within the module at the EM and Spacecraft levels of assembly.

[7] Removal of this panel shall be possible without requiring the removal of any other spacecraft equipment.

[8] The honeycomb core of the EM shall be densified locally to ensure that throughout testing, no component internal to the EM experiences accelerations greater than 1.25 times those defined in the Predicted Limit Loads figure of the General Interface Specification (GIS), IS20008501.

[9] The EM panels shall provide adequate strength at fastener locations for the mechanical mounting of components and assemblies listed in Table II of Section 3.1.3.

[10] The EM shall be designed so it can be independently assembled, tested, attached or detached from the EOS Spacecraft structure without requiring disassembly of thermal control subsystem hardware.

3.1.2.4 Thermal

[1] The EM shall comply with Section 5 of the GIS, IS20008501, regarding Thermal Interfaces, Environmental Flux Parameters, and Thermal Control Hardware.

[2] The EM shall comply with with the requirements of the Thermal Control System Performance Specification, PS20008549.

[3] The EM shall acquire, spread and reject component heat to the external Spacecraft sink as necessary to maintain the temperature at each component interface to levels below the maximum limits specified in the Temperature Requirements table in Section 5 of the GIS, IS20008501.

[4] The Heater Control Electronics (HCE2), using heaters and thermistors in the EM, shall maintain the temperature at each component interface to levels above the minimum limits specified in the Temperature Requirements table in Section 5 of the GIS, IS20008501.

[5] Heat dissipating components shall meet the EM/Component Conductive Interface requirements in Section 5 of the GIS, IS20008501.

[6] Temperature sensors and temperature sensing assemblies shall be provided and connected to the BDU for the purpose of tracking thermal performance.

3.1.3 Major Component List

The major components of the RWA Equipment Module are listed in Table II. Each component of the EM shall meet the requirements imposed on it by its parent subsystem performance specification.

Table II. RWA Equipment Module Components

Subsystem	Component	Part Number
Guidance, Navigation & Control	Reaction Wheel Assembly – 4	20003824
C&DH	Bus Data Unit (BDU)	20008568
Power	Fuse Distribution Board (FDB)	20008694
Thermal	RWA EM Thermal Installation Heater Control Electronics (HCE) Temperature Sensor Heaters (includes RWA and Makeup)	20008678 20008785 20008790 20008788

Table II. RWA Equipment Module Components

Subsystem	Component	Part Number
Electrical Accommodations	RWA EMH Harness Installation RWA EMP Power Harness RWA EMC C&DH Harness	20038243 20008686 20038260
Structures and Mechanisms	RWA EM Structure Assembly Radiator (Bottom) Panel (–Z) Radiator (End) Panel (+X) Radiator (Access) Panel (–Y) Panel Assembly (–X) Top Panel Assembly (+Z) Side Panel Assembly (+Y) Kinematic Mounts RWA Support Bracket	20008903 20008904 20008906 20008905 20008906 20008907 20008908 20001400 20041188

3.2 Characteristics

3.2.1 Performance

The performance requirements for the RWA EM are derived from the CEI Specification, PS20005396

3.2.2 Physical Characteristics

3.2.2.1 Weight

The total weight of the RWA EM shall not exceed 280 lbs.

3.2.2.2 Power Consumption

The power consumption of the EM components for the different EOS spacecraft operating modes shall not exceed the values specified in Table III.

Table III. RWA EM Power Consumption (Watts)[1]

Component	Ground Test and Launch/ Ascent Mode	Standby Mode	Delta–V Mode	Science Mode			Survival Mode	Safe Mode	
				Max	Nominal	Min[4]		Max	Min
POWER CONSUMPTION:									
RWAs	60.0	60.0	60.0	60.0	60.0	60.0	60.0	60.0	60.0
BDU	9.2	9.2	9.2	9.2	9.2	9.2	9.2	9.2	9.2
FDB	0.0	0.0	0.0	0.0	0.0	0.0	0.0	0.0	0.0
HTRS	(TBD–1)	(TBD–1)	(TBD–1)	(TBD–1)	(TBD–1)	(TBD–1)	(TBD–1)	(TBD–1)	(TBD–1)

Table III. RWA EM Power Consumption (Watts)[1] (Continued)

Component	Ground Test and Launch/ Ascent Mode	Standby Mode	Delta–V Mode	Science Mode			Survival Mode	Safe Mode	
				Max	Nominal	Min[4]		Max	Min
HCE2s[2]	4.4	4.4	1.1	1.1	1.1	1.1	4.4	4.4	1.1
Total EM:									

(1) Maximum allowable one orbit average power allocations to satisfy performance requirements for the mode.

(2) Does not include TCS heater power. Power shown is the sum of the allocations for the HCE2s.

3.2.2.3 Power Dissipation

The thermal dissipation of the EM components shall be equal to the power consumption described in 3.2.2.2 except for the for the following components:

a. FDB dissipation shall be no greater than 1.1W in any mode, and

b. Power harness dissipation shall be no greater than 0.6W in any mode.

3.2.2.4 Dimension

The dimensions of the RWA EMs shall not exceed the dimensions given below. Actual dimensions are defined in assembly drawing 20001409.

Length (X)	59 inches
Width (Y)	25 inches
Height (Z)	28 inches

3.2.2.5 Transport and Storage

[1] Accommodations for tie–downs, pallets, packaging, and containers necessary for transport and storage of the Equipment Module shall be made to ease handling by, and interaction with, Ground Support Equipment (GSE).

[2] The proper orientation for placing items in storage or transportation containers shall be made obvious by design or marking.

[3] The EM shall provide lift points capable of supporting the EM and any accompanying GSE under handling loads of 2g vertical per MIL–STD–1367A.

[4] When four or more lift points are provided, any combination of three shall be capable of lifting the entire load.

3.2.2.6 Integration and Test

[1] The EM design shall define any GSE required for cooling the Assembly during I&T as well as during processing at the launch site.

[2] The Assembly shall incorporate the thermal GSE interfaces which are necessary to ensure adequate ground cooling.

[3] The interfaces shall be accessible to the thermal GSE at the Spacecraft level of assembly.

[4] Ground cooling of the EM shall be accomplished by **(TBD–2)**.

[5] The EM design shall ensure that access to the interface connector is sufficient to preclude the need for blind–mate connectors during installation of the EM on the Spacecraft Core.

3.2.2.7 Layout

[1] Fuses for the EM shall be located, to the extent practical, such that it is possible to replace or view any fuse without requiring any disassembly of the EM.

[2] Component spacing shall provide clearance for harness runs and connector access.

[3] The EM shall, to the extent practical, ensure that any component contained in the Major Assembly can be removed without having to remove any other component.

[4] Component spacing shall provide clearance for harness runs and connector access.

[5] All flight equipment which would require maintenance during a storage period of 5 years or less shall be accessible when the Spacecraft is in its stored configuration.

[6] All Spacecraft components which are fragile or otherwise susceptible to damage shall, where practical, be guarded or located so as to reduce this susceptibility.

[7] Sensitive adjustment controls and actuators shall be located or guarded to protect them from inadvertent perturbation.

[8] Component labeling shall be visible when the component is installed in the parent assembly or stowed. Labels shall be installed such that they are readable by the unaided human eye.

3.2.2.8 Configuration

The EM shall conform to Martin Marietta Astro Space (Astro Space) assembly drawings 20008904–20008909. These drawings shall define the following parameters:

a. Physical size.

b. Mounting requirements and interfaces.

c. External finishes.

d. Electrical connector locations and sizes.

e. Connector reference designators.

f. Method of identification.

3.2.2.9 Natural Frequency

The natural frequency of the RWA EM shall be no less than the level specified in the appendix to the Structures and Mechanisms Subsystem Performance Specification, PS20001415.

3.2.2.10 Alignment

The RWAs shall be mounted as specified in Drawing **(TBD–3)**. The RWAs shall be mounted to the baseplate within 0.75 degrees with knowledge of the mounting to within 300 arc–seconds.

3.2.3 Reliability

Reliability requirements are levied at the component level, and an overall reliability requirement for the GN&C Subsystem is defined in Section 3.2.5 of the GN&C Subsystem Specification, PS20004937.

3.2.4 Durability

The EM shall be capable of withstanding launch and on–orbit environments specified in the GIS, IS20008501, for a period of at least five years.

3.2.5 Maintainability

[1] The EM shall be designed so that no regular maintenance will be required. Any required maintenance will be performed at the component level only.

[2] Removable dust covers or other protective devices shall be provided over electrical connectors.

3.2.6 Environmental Conditions

3.2.6.1 General

[1] The EM shall be capable of meeting all performance requirements when operating in Spacecraft bay 2 on the –Y side of the Spacecraft.

[2] The EM shall be capable of be capable of meeting the requirements defined in this document after exposure to the handling, transportation, and launch environments defined in the GIS, IS20008501 Section 6,

[3] and to the test environments defined in the Verification Specification (VS), IS20005404.

[4] The EM shall be capable of be capable of meeting the requirements defined in this document during exposure to the mission orbit environment specified in the GIS, IS20008501 Section 6.

[5] The EM shall comply with the requirements of the Contamination Control Plan, PN20001412.

3.2.6.2 Sine Vibration

[1] The RWA Sensor EM shall remain undamaged during and following exposure to the sine vibration tests.

[2] The EM structure shall ensure that no component internal to the EM experiences accelerations greater than 1.25 times those defined in the Predicted Limit Loads figure of the General Interface Specification (GIS), IS20008501 when the EM experiences the test levels.

3.2.7 Transportability

[1] The EM shall be capable of being transported by surface vehicle or aircraft.

[2] The transporting environment shall be controlled so as to be less severe than the specified operating environment.

3.3 Design and Construction

[1] Its design shall be such that it can be independently assembled, tested, and attached to or detached from the EOS AM Spacecraft structure.

[2] The EM design shall preclude improper installation to the Spacecraft, where practical.

[3] All electrical connectors shall be selected, sized, keyed, and/or marked such that incorrect attachment to the mating connector is prevented.

[4] All connectors shall attach such that the connectors cannot be inadvertently unlocked during ground operations.

[5] The EM design shall comply with the Design and Construction requirements specified in the GIS, IS20008501, for General requirements, Identification and Marking except for the Content paragraph, Finishes, Venting, Interchangeability, and Drawing Terms and Tolerances.

3.3.1 Materials, Processes, and Parts

[1] All materials, parts, and processes used in the design and construction of the EM shall be selected and controlled in accordance with the requirements for Tooling in section 4 of the GIS, IS20008501.

3.3.2 Electric Fields

[1] Components shall meet the electric field emissions requirements in the Equipment Radiated Emissions (RE02, RE01/RE04) section of the Equipment EMI Requirements in the EMC Control Plan, PN20005869.

[2] Components shall meet the requirements of the Radiated Susceptibility (RS03) Electric Fields section and the

[3] Radiated Susceptibility On–Orbit Environment section of the Equipment EMI Requirements in the EMC Control Plan, PN20005869.

3.3.3 Magnetic Fields

[1] Components shall meet the magnetic field emission and

[2] magnetic properties requirements in the Equipment Radiated Emissions and Equipment Radiated Properties sections respectively of the Equipment EMI Requirements in the EMC Control Plan, PN20005869.

[3] Components shall meet the requirements of the Radiated Susceptibility (RS01) Magnetic Fields section of the Equipment EMI Requirements in the EMC Control Plan, PN20005869.

3.3.4 Nameplates and Product Marking

[1] The EM shall be marked for identification in accordance with the Identification Marking Standard, S32534, Rev E, and ICD 20001411.

[2] Conspicuous markings or labels shall be affixed to the EM components. The identification shall contain, as a minimum, the following:

a. Astro Space Part Number

b. "RWA Equipment Module"

c. Revision Level

d. Date of Manufacture

e. Contract Number.

[3] Applicable date-sensitive information shall also be identified.

[4] Hardware or equipment which is not suitable for use in flight, and which could be accidentally substituted for flight or flight spares hardware, shall be plainly marked and identified to indicate this status.

[5] All test points, adjustment devices, and alignment points shall be labeled for positive identification.

[6] Wires and cables for hardware shall not be identified by hot stamping directly onto primary or secondary (shield) insulation.

[7] The proper orientation for placing items in storage or transportation containers shall be obvious by design or marking.

3.3.5 Workmanship

[1] The electrical design of the EM shall be in accordance with the design requirements specified in NHB 5300.4 (3A-1, 3G through 3K).

3.3.6 Safety

[1] The design shall meet the factors of safety presented in the mechanical section of IS20008501.

[2] Where practical, hazards shall be eliminated or removed through design measures.

[3] Hazards which cannot be eliminated or removed shall, where practical, be prevented through incorporation and use of safety devices or features.

[4] Remaining hazards shall be controlled using warning devices and/or special procedures.

[5] Automated detection and safing of hazards which may cause personnel injury or loss of the Spacecraft shall be independent of those subsystems being monitored.

[6] Where practical, the detection and safing of lesser hazards shall also follow this practice.

[7] Design decisions shall accommodate compliance with safety requirements specified in this document before accommodating any other considerations (e.g., cost, schedule, performance).

3.3.7 Human Performance/Human Engineering

[1] The EM shall comply with the human engineering criteria of MIL-STD-1472.

3.4 Documentation

Documentation shall be in accordance with the Data Requirements list of the EOS-AM Spacecraft Statement of Work (SOW), contract number NAS5-32500.

3.4.1 Specifications

All parent and component specifications associated with this specification are shown in the EOS-AM Spacecraft Specification Tree, 20008536.

3.4.2 Drawings

[1] The EM shall be defined by prepared drawings. Drawing 20001411G1 shall define and control the physical parameters of the EM,

[2] and drawing 20038240 shall describe the EM harness.

3.4.3 Test Plans and Procedures

[1] Detailed qualification and acceptance test plans and procedures shall be prepared.

3.5 Precedence

In the event of conflicting requirements between the documents referenced herein and the content of this document, the following descending order of precedence shall be used in resolution of the conflict:

a. Requirements Document for the EOS AM Spacecraft (RD)

b. Performance Assurance Requirements for the EOS Observatories (PAR)

c. Unique Instrument Interface Documents

d. The General Instrument Interface Specification (GIIS)

e. Contract End Item (CEI) Specification

f. External Interface Control Documents(ICD's) (e.g., EOS to Launch Vehicle, EOS to TDRSS, etc.)

g. Subsystem and Major Assembly Specifications

h. Component Specifications

(This page intentionally left blank.)

4 QUALITY ASSURANCE PROVISIONS

This section outlines the structure and requirements of a quality assurance program for the RWA EM. The purpose of the program is to demonstrate that the RWA EM has been manufactured properly, that it meets the performance requirements defined in Section 3, and that it will operate properly when connected to its associated subsystems, EMs, major assemblies, and components. The overall quality assurance approach is defined in the PAIP, PN20005397. The general testing approach is defined in the Verification Plan, PN20005404. Specific test description and levels are found in the the Verification Specification, PS20005404.

4.1 General

Each of the requirements in Section 3 of this specification shall be verified.. Test methods and measurements shall be compliant with all requirements herein.

The test flow for the RWA EM is defined in the RWA EM Test Plan, TP20001409 . The RWA EM will be vibration strength tested using mass models before the flight components are installed. All testing after the flight components are installed will be at acceptance levels.

4.1.1 Responsibility for Tests

Unless otherwise specified herein, or in the Statement of Work, acceptance and qualification testing shall be performed by Astro Space.

4.1.2 Special Tests and Examinations

Not applicable

4.1.3 Reliability Test

Not applicable

4.1.4 Engineering Evaluation and Test

Not applicable

4.1.5 Protoflight Test

Protoflight tests, combined with the other verification methods listed in the Verification Matrix, Attachment A (provided under separate cover), shall verify that the flight hardware design meets the technical requirements of Section 3 of this equipment module specification to assure operational suitability in the defined environments. Protoflight test hardware shall be used for qualification testing and shall be identical in configuration and production processing to flight hardware.

Protoflight tests, where specified, shall consist of qualification level exposure of the first flight article for acceptance level durations (time and/or cycles).

Protoflight tests shall be performed under strict control of environments and test procedures. Adjustments or tuning of protoflight test hardware is not permitted throughout the entire test program. The requirements of Section 3 to be verified prior to, during, or after each environment shall be as specified in PN20008745.

4.1.6 Installation Test and Checkout

Installation testing and checkout shall include continuity checking, interface mating, support equipment compatibility, and documentation verification. The RWA EM Integration and Test Flow is shown in Figure 5.

4.1.6.1 Electrical Integration and Checkout (EIC)

An EIC shall be performed to verify the proper input and grounding of power, commands, and other signals prior to mating of flight hardware. The EIC shall also verify proper response to power, commands, and signal upon initial integration of flight hardware. The EM components shall be integrated with the panel in the following order:

a. RWA EM Harness

b. Fuse and Distribution Box

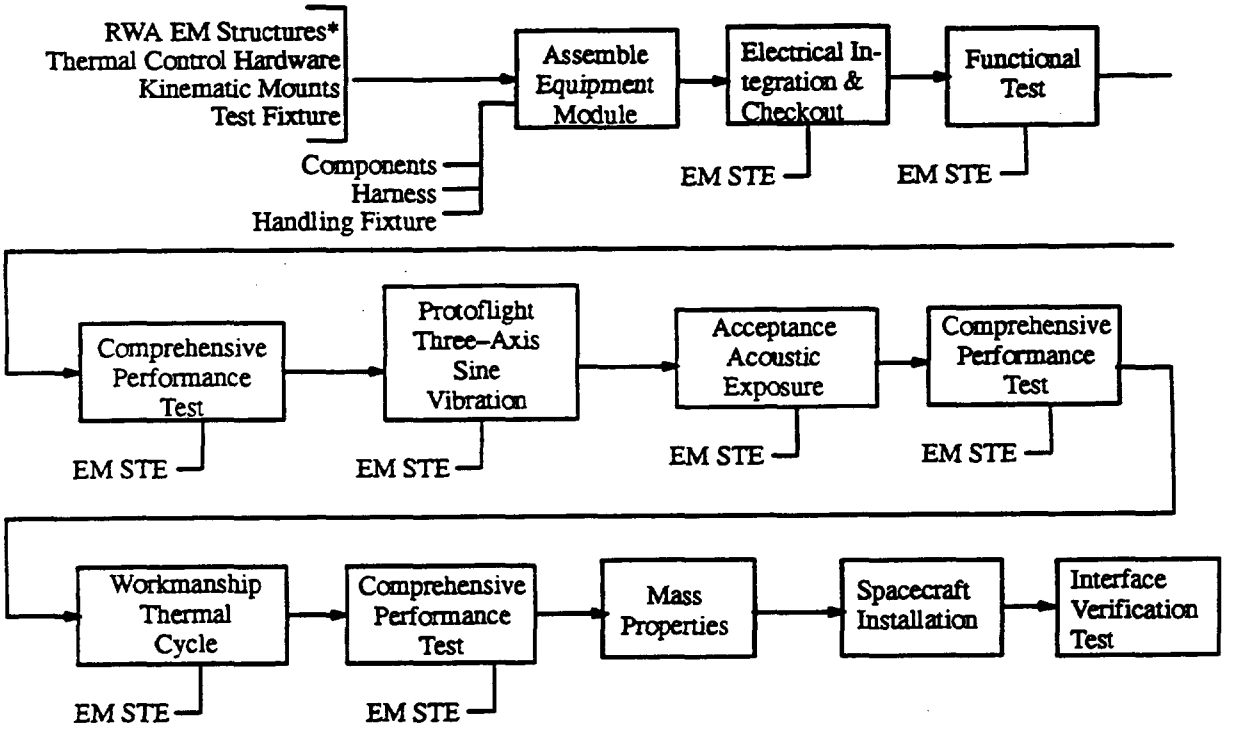

* RWA EM Structures Strength Tested

Figure 5. RWA EM Integration And Test Flow

c. Heater Control Electronics (HCE2), Heaters and Sensors

d. Bus Data Unit (BDU)

e. Reaction Wheel Assemblies.

4.1.6.2 Interface Unit Functional Test (FT)

A functional test of the Equipment Module shall be performed to test command and data paths between components and to exercise prime and redundant hardware.

4.1.6.3 Comprehensive Performance Test (CPT)

A CPT shall be performed to verify that the Equipment Module meets the performance requirements in all operational and contingency modes, as well as verifying all command and data paths and all redundant hardware.

4.1.6.4 Interface Verification Test (IVT)

An IVT shall be performed to verify the proper Equipment Module interfaces to the Spacecraft Bus. It verifies all power, ground, and signal connectors are properly mated and that there is signal presence on the proper connectors.

4.1.7 Formal Test Verification

Formal verification of the performance requirements of the EM are in the Verification Matrix, Attachment A. The Verification Matrix identifies the verification method as specified herein and the level at which tests are conducted. The EM shall be tested according to the RWA EM Test Plan, PN20001409.

4.2 Quality Conformance Inspections

The equipment module shall be exposed to verification conditions which represent those environments encountered throughout the ground phase and flight mission. The environmental conditions and levels of exposure are defined in the Verification Specification for the Earth Observing System (VRD-110), PS20005404, Section 4. There are four methods which may be used individually or in combination to verify each requirement in Section 3. These methods, defined as inspection (I), analysis (A), demonstration (D), and test (T) are defined in the Verification Specification for the Earth Observing System (VRD-110), PS20005404, Section 4.

4.2.1 Method of Verification

4.2.1.1 Inspection

Inspection may be used to verify design and construction requirements, drawing compliance, or specific physical dimensions of the equipment module. Inspection is a method of verification of physical characteristics that determines compliance without the use special laboratory equipment,

procedures, test support items, or services. Inspection uses standard methods such as visual gauges, etc., to verify compliance with requirements. Inspection also includes the review of design documents, material lists, code, plans, etc., to verify that requirements have been met.

4.2.1.2 Analysis

Analytical techniques may be used, in lieu of testing, to verify compliance to specified requirements, either alone or in combination with test. The selected techniques may include, typically, system engineering analysis, statistics, qualitative analysis, analog modeling, and computer simulation.

4.2.1.3 Demonstration

Demonstration is a qualitative method of verification that evaluates the properties of the subject equipment by observation. Demonstration is used with or without special test equipment or instrumentation to verify required characteristics such as operational functioning human engineering features, service and access features, transportability, and displayed data.

4.2.1.4 Test

Test is a quantitative method of verification wherein performance requirements are verified by measurement during and after the controlled application of functional and environmental stimuli. These measurements may require the use of laboratory equipment, recorded data, procedures, test support items, or services.

4.2.1.5 Classification of Characteristics

Classification of characteristics as critical, major or minor, shall be as defined in MIL-STD-109.

4.2.1.6 Test Equipment

[1] Existing test equipment shall be used wherever practical.

[2] Where new test equipment is required to test units which are physically or functionally identical or similar, the equipment shall be designed to perform its task(s) on each element of that group, where practical.

4.2.1.6.1 Test Equipment Safety Features

[1] Test equipment shall incorporate any safety interlocks or other safety features necessary to reduce the introduction of safety hazards by the test equipment.

[2] Any safety feature included in any Spacecraft test equipment shall give a visual, auditory, or electronic indication of activation when it is activated.

4.2.1.6.2 Test Equipment Verification

Unless otherwise specified herein, test equipment used to measure RWA EM performance characteristics shall be capable of demonstrating that

a. it will not impose environments on the tested item(s) beyond the levels called for in the Verification Specification, PS20005404, and

b. it is capable of imposing the test levels called for in the Verification Specification, PS20005404.

c. it is capable of meeting all the requirements imposed on it by the Ground Support Equipment Requirements Document, 20001430 (GSERD)

4.2.1.6.3 Test Equipment Calibration

[1] EM Test equipment shall be calibrated in accordance with the Performance Assurance Implementation Plan, 20005397.

(This page intentionally left blank.)

5 PREPARATION FOR DELIVERY

5.1 General

Interior and exterior shipping containers shall be marked in accordance with the Identification and Marking requirements of the General Interface Specification, IS20008501.

(This page intentionally left blank.)

6 NOTES

6.1 Definitions

6.2 Abbreviations and Acronyms

ACE	Attitude Control Electronics
BDU	Bus Data Unit
C&DHS	Command and Data Handling Subsystem
CEI	Contract End Item
CPT	Comprehensive Performance Test
EAS	Electrical Accommodations Subsystem
EIC	Electrical Integration and Checkout
EM	Equipment Module
EMC	Electromagnetic Compatibility
EOL	End–of–Life
EOS	Earth Observing System
FDB	Fuse Distribution Box
FT	Functional Test
GIS	General Interface Specification
GN&C	Guidance, Navigation, and Control
HCE	Heater Control Electronics
ICD	Interface Control Document
IVT	Interface Verification Test
I&T	Integration and Test
KM	Kinematic Mounts
lb	Pounds (Mass)
PAIP	Performance Assurance Implementation Plan
PAML	Program Approved Materials and Processes List
PAPL	Program Approved Parts List
PAR	Performance Assurance Requirements
RWA	Reaction Wheel Assembly
RWA EM	Reaction Wheel Assembly Equipment Module

SM	GN&C Sensor Module
SMS	Structures and Mechanisms Subsystem
SOW	Statement of Work
STE	Special Test Equipment
TBD	To Be Determined
TBR	To Be Reviewed/Resolved

6.3 Exceptions to the GIS and GIIS

None.

6.4 Requirements Traceability Matrix

Requirements in Section 3 of this specification were derived from the source document, PS20005396, Contract End Item (CEI) Specification. Compliance to these requirements are shown in the Requirements Traceability Matrix, Attachment B, provided under separate cover.

APPENDIX I

10 RWA EM ELECTRICAL CONNECTOR CONTACT ASSIGNMENTS

The EM connectors on the electrical connector bracket shall be configured as shown in Figure 6.

All Contact Numbers are **(TBD–4)**.

All Circuit Categories are **(TBD–5)**.

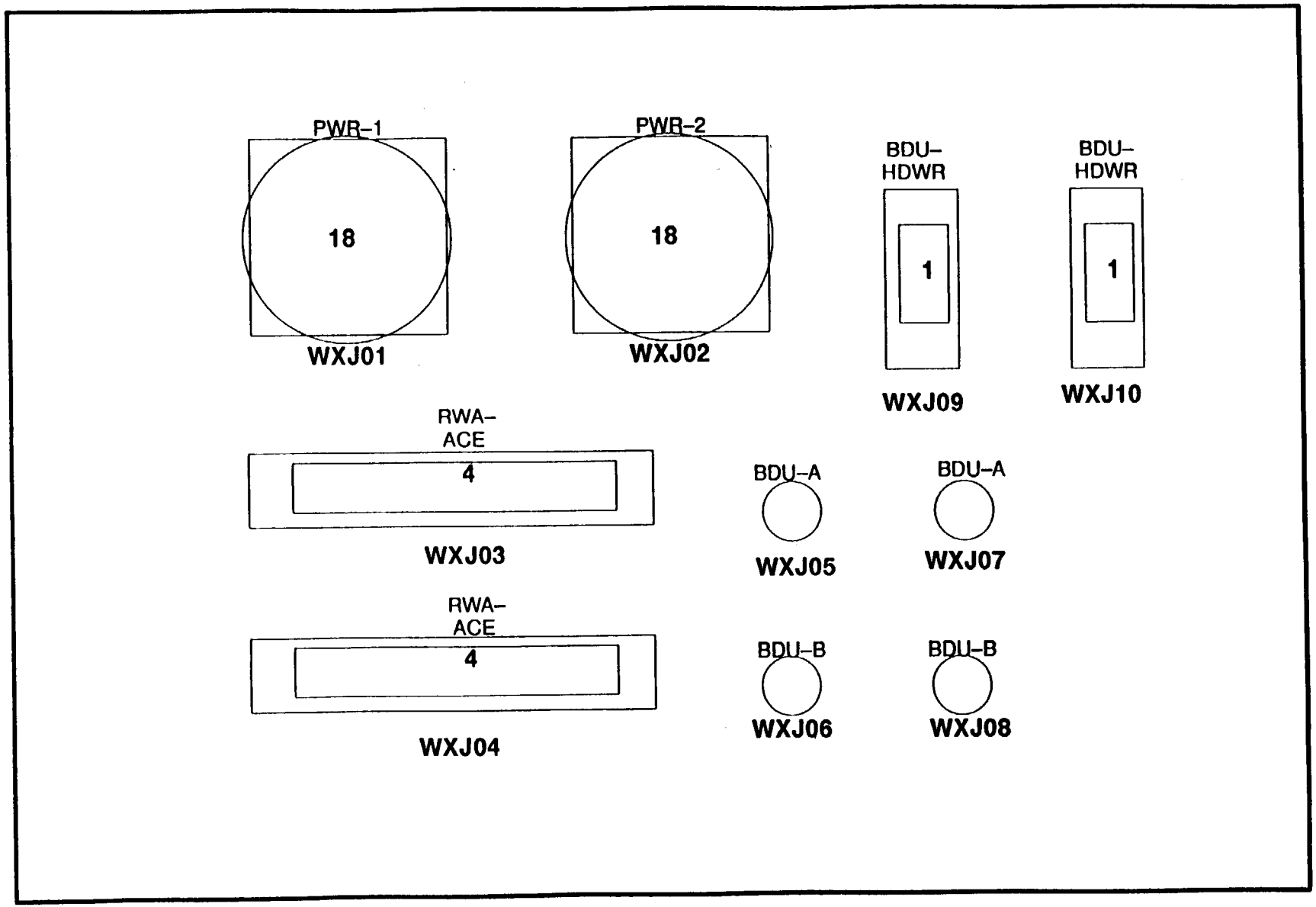

Figure 6. RWA EM Interface Bracket

Connector Designation: WXJ01 Part Number: 20034844PJ1F32N		Connector Function: Power Input to RWA – A Connector Type: 32 pin circular	
Contact Number	**Function Name**	**Circuit Category**	**Source / Destination**
	RWA1 120V A POS–1		Power EM PDU / RWA1
	RWA1 120V A RTN–1		Power EM PDU / RWA1
	RWA1 120V A POS–2		Power EM PDU / RWA1
	RWA1 120V A RTN–2		Power EM PDU / RWA1
	RWA1 CHAS GND A		Power EM PDU / RWA1
	RWA2 120V A POS–1		Power EM PDU / RWA2
	RWA2 120V A RTN–1		Power EM PDU / RWA2
	RWA2 120V A POS–2		Power EM PDU / RWA1
	RWA2 120V A RTN–2		Power EM PDU / RWA2
	RWA2 CHAS GND A		Power EM PDU / RWA2
	RWA3 120V A POS–1		Power EM PDU / RWA3
	RWA3 120V A RTN–1		Power EM PDU / RWA3
	RWA3 120V A POS–2		Power EM PDU / RWA3
	RWA3 120V A RTN–2		Power EM PDU / RWA3
	RWA3 CHAS GND A		dPower EM PDU / RWA3
	RWA4 120V A POS–1		Power EM PDU / RWA4
	RWA4 120V A RTN–1		Power EM PDU / RWA4
	RWA4 120V A POS–2		Power EM PDU / RWA4
	RWA4 120V A RTN–2		Power EM PDU / RWA4
	RWA4 CHAS GND A		Power EM PDU / RWA1
	RWAFDB A 120V POS–1		Power EM PDU / RWA FDB A
	RWAFDB A 120V RTN–1		Power EM PDU / RWA FDB A
	RWAFDB A 120V POS–2		Power EM PDU / RWA FDB A
	RWAFDB A 120V RTN–2		Power EM PDU / RWA FDB A
	RWA EM FAULT GND A		Power EM PDU / RWA FDB A

Connector Designation: WXJ02 Part Number: 20034844PJ1F32A	Connector Function: Power Input to RWA – B Connector Type: 32 pin circular

Connector Designation: WXJ02 Part Number: 20034844PJ1F32A (Continued)		Connector Function: Power Input to RWA – B Connector Type: 32 pin circular	
Contact Number	**Function Name**	**Circuit Category**	**Source / Destination**
	RWA1 120V B POS–1		Power EM PDU / RWA1
	RWA1 120V B RTN–1		Power EM PDU / RWA1
	RWA1 120V B POS–2		Power EM PDU / RWA1
	RWA1 120V B RTN–2		Power EM PDU / RWA1
	RWA1 CHAS GND B		Power EM PDU / RWA1
	RWA2 120V B POS–1		Power EM PDU / RWA2
	RWA2 120V B RTN–1		Power EM PDU / RWA2
	RWA2 120V B POS–2		Power EM PDU / RWA2
	RWA2 120V B RTN–2		Power EM PDU / RWA2
	RWA2 CHAS GND B		Power EM PDU / RWA2
	RWA3 120V B POS–1		Power EM PDU / RWA3
	RWA3 120V B RTN–1		Power EM PDU / RWA3
	RWA3 120V B POS–2		Power EM PDU / RWA3
	RWA3 120V B RTN–2		Power EM PDU / RWA3
	RWA3 CHAS GND B		Power EM PDU / RWA3
	RWA4 120V B POS–1		Power EM PDU / RWA4
	RWA4 120V B RTN–1		Power EM PDU / RWA4
	RWA4 120V B POS–2		Power EM PDU / RWA4
	RWA4 120V B RTN–2		Power EM PDU / RWA4
	RWA4 CHAS GND B		Power EM PDU / RWA4
	RWAFDB B 120V POS–1		Power EM PDU / RWA FDB B
	RWAFDB B 120V RTN–1		Power EM PDU / RWA FDB B
	RWAFDB B 120V POS–2		Power EM PDU / RWA FDB B
	RWAFDB B 120V RTN–2		Power EM PDU / RWA FDB B
	RWA EM FAULT GND B		Power EM PDU / RWA FDB B

Connector Designation: WXJ03 Part Number: 20042415P1037PA	Connector Function: RWA 1/3 Control Connector Type: 37 pin circular

Connector Designation: WXJ03 Part Number: 20042415P1037PA (Continued)		Connector Function: RWA 1/3 Control Connector Type: 37 pin circular	
Contact Number	**Function Name**	**Circuit Category**	**Source / Destination**
	RWA1 Tach A 15 Vdc		ACE / RWA1
	RWA1 Tach A 15 Vdc Rtn		ACE / RWA1
	RWA1 Tach B 15 Vdc		ACE / RWA1
	RWA1 Tach B 15 Vdc Rtn		ACE / RWA1
	RWA1 Case Gnd–1		ACE / RWA1
	RWA1 Tach A 01 Pulses		ACE / RWA1
	RWA1 Tach A 01 Rtn		ACE / RWA1
	RWA1 Tach A 02 Pulses		ACE / RWA1
	RWA1 Tach A 02 Rtn		ACE / RWA1
	RWA1 Analog Control Voltage		ACE / RWA1
	RWA1 Analog Control Signal Return		ACE / RWA1
	RWA1 Tach B 01 Pulses		ACE / RWA1
	RWA1 Tach B 01 Rtn		ACE / RWA1
	RWA1 Tach B 02 Pulses		ACE / RWA1
	RWA1 Tach B 02 Rtn		ACE / RWA1
	RWA1 Case Gnd–2		ACE / RWA1
	RWA3 Tach A 15 Vdc		ACE / RWA3
	RWA3 Tach A 15 Vdc Rtn		ACE / RWA3
	RWA3 Tach B 15 Vdc		ACE / RWA3
	RWA3 Tach B 15 Vdc Rtn		ACE / RWA3
	RWA3 Case Gnd–1		ACE / RWA3
	RWA3 Tach A 01 Pulses		ACE / RWA3
	RWA3 Tach A 01 Rtn		ACE / RWA3
	RWA3 Tach A 02 Pulses		ACE / RWA3
	RWA3 Tach A 02 Rtn		ACE / RWA3
	RWA3 Analog Control Voltage		ACE / RWA3

Connector Designation: WXJ03 Part Number: 20042415P1037PA (Continued)		Connector Function: RWA 1/3 Control Connector Type: 37 pin circular	
Contact Number	**Function Name**	**Circuit Category**	**Source / Destination**
	RWA3 Analog Control Signal Return		ACE / RWA3
	RWA3 Tach B 01 Pulses		ACE / RWA3
	RWA3 Tach B 01 Rtn		ACE / RWA3
	RWA3 Tach B 02 Pulses		ACE / RWA3
	RWA3 Tach B 02 Rtn		ACE / RWA3
	RWA3 Case Gnd–2		ACE / RWA3
	RWA3 Tach B 01 Pulses		ACE / RWA3
	RWA3 Tach B 01 Rtn		ACE / RWA3
	RWA3 Tach B 02 Pulses		ACE / RWA3
	RWA3 Tach B 02 Rtn		ACE / RWA3
	RWA3 Case Gnd–2		ACE / RWA3

Connector Designation: WXJ04 Part Number: 20042415P1037PA		Connector Function: RWA 2/4 Control Connector Type: 37 pin circular	
Contact Number	**Function Name**	**Circuit Category**	**Source / Destination**
	RWA2 Tach A 15 Vdc		ACE / RWA2
	RWA2 Tach A 15 Vdc Rtn		ACE / RWA2
	RWA2 Tach B 15 Vdc		ACE / RWA2
	RWA2 Tach B 15 Vdc Rtn		ACE / RWA2
	RWA2 Case Gnd–1		ACE / RWA2
	RWA2 Tach A 01 Pulses		ACE / RWA2
	RWA2 Tach A 01 Rtn		ACE / RWA2
	RWA2 Tach A 02 Pulses		ACE / RWA2
	RWA2 Tach A 02 Rtn		ACE / RWA2
	RWA2 Analog Control Voltage		ACE / RWA2
	RWA2 Analog Control Signal Return		ACE / RWA2

Connector Designation: WXJ04 Part Number: 20042415P1037PA (Continued)		Connector Function: RWA 2/4 Control Connector Type: 37 pin circular	
Contact Number	**Function Name**	**Circuit Category**	**Source / Destination**
	RWA2 Tach B 01 Pulses		ACE / RWA2
	RWA2 Tach B 01 Rtn		ACE / RWA2
	RWA2 Tach B 02 Pulses		ACE / RWA2
	RWA2 Tach B 02 Rtn		ACE / RWA2
	RWA2 Case Gnd–2		ACE / RWA2
	RWA4 Tach A 15 Vdc		ACE / RWA4
	RWA4 Tach A 15 Vdc Rtn		ACE / RWA4
	RWA4 Tach B 15 Vdc		ACE / RWA4
	RWA4 Tach B 15 Vdc Rtn		ACE / RWA4
	RWA4 Case Gnd–1		ACE / RWA4
	RWA4 Tach A 01 Pulses		ACE / RWA4
	RWA4 Tach A 01 Rtn		ACE / RWA4
	RWA4 Tach A 02 Pulses		ACE / RWA4
	RWA4 Tach A 02 Rtn		ACE / RWA4
	RWA4 Analog Control Voltage		ACE / RWA4
	RWA4 Analog Control Signal Return		ACE / RWA4
	RWA4 Tach B 01 Pulses		ACE / RWA4
	RWA4 Tach B 01 Rtn		ACE / RWA4
	RWA4 Tach B 02 Pulses		ACE / RWA4
	RWA4 Tach B 02 Rtn		ACE / RWA4
	RWA4 Case Gnd–2		ACE / RWA4

Connector Designation: WXJ05 Part Number: 20040889P1		Connector Function: C&T 1553 DATA BUS Connector Type: Triaxial circular	
Contact Number	**Function Name**	**Circuit Category**	**Source / Destination**

Connector Designation: WXJ05 Part Number: 20040889P1		Connector Function: C&T 1553 DATA BUS Connector Type: Triaxial circular	
Contact Number	**Function Name**	**Circuit Category**	**Source / Destination**
Center Intermediate Outer Shell	C&T 1553B Data Bus A Stub 1		RWA BDU / CTIU

Connector Designation: WXJ06 Part Number: 20040889P1		Connector Function: C&T 1553 DATA BUS Connector Type: Triaxial circular	
Contact Number	**Function Name**	**Circuit Category**	**Source / Destination**
Center Intermediate Outer Shell	C&T 1553B Data Bus A Stub 2		RWA BDU / CTIU

Connector Designation: WXJ07 Part Number: 20040889P1		Connector Function: C&T 1553 DATA BUS Connector Type: Triaxial circular	
Contact Number	**Function Name**	**Circuit Category**	**Source / Destination**
Center Intermediate Outer Shell	C&T 1553B Data Bus B Stub 1		RWA BDU / CTIU

Connector Designation: WXJ08 Part Number: 20040889P1		Connector Function: C&T 1553 DATA BUS Connector Type: Triaxial circular	
Contact Number	**Function Name**	**Circuit Category**	**Source / Destination**
Center Intermediate Outer Shell	C&T 1553B Data Bus B Stub 2		RWA BDU / CTIU

Connector Designation: WXJ09 Part Number: 20042415P1009PA		Connector Function: BDU ON/OFF COMMAND Connector Type: 9 pin Rectangular D	
Contact Number	**Function Name**	**Circuit Category**	**Source / Destination**
	CTIU 1 WBDU A ON CMD		CTIU / BDU A
	CTIU 1 WBDU A ON CMD RTN		CTIU / BDU A
	CTIU 1 WBDU A OFF CMD		CTIU / BDU A
	CTIU 1 WBDU A OFF CMD RTN		CTIU / BDU A
	CTIU 1 WBDU B ON CMD		CTIU / BDU B
	CTIU 1 WBDU B ON CMD RTN		CTIU / BDU B
	CTIU 1 WBDU B OFF CMD		CTIU / BDU B
	CTIU 1 WBDU B OFF CMD RTN		CTIU / BDU B

Connector Designation: WXJ10 Part Number: 20042415P1009PA		Connector Function: BDU ON/OFF COMMAND Connector Type: 9 pin Rectangular D	
Contact Number	**Function Name**	**Circuit Category**	**Source / Destination**
	CTIU 2 WBDU A ON CMD		CTIU / BDU A
	CTIU 2 WBDU A ON CMD RTN		CTIU / BDU A

Connector Designation: WXJ10 Part Number: 20042415P1009PA (Continued)		Connector Function: BDU ON/OFF COMMAND Connector Type: 9 pin Rectangular D	
Contact Number	**Function Name**	**Circuit Category**	**Source / Destination**
	CTIU 2 WBDU A OFF CMD		CTIU / BDU A
	CTIU 2 WBDU A OFF CMD RTN		CTIU / BDU A
	CTIU 2 WBDU B ON CMD		CTIU / BDU B
	CTIU 2 WBDU B ON CMD RTN		CTIU / BDU B
	CTIU 2 WBDU B OFF CMD		CTIU / BDU B
	CTIU 2 WBDU B OFF CMD RTN		CTIU / BDU B

PS20001411
CAGE No. 49671
30 July 1993

Performance Specification Recorder Equipment Module for EOS–AM Spacecraft (SP–801)

Prepared under:
Contract number NAS5–32500
NASA Goddard Space Flight Center
Greenbelt, Maryland 20771

Prepared by:
Martin Marietta Corporation
Astro Space
P.O. Box 800
Princeton, New Jersey 08543–0800

DCC072993

(This page intentionally left blank.)

REVISION LOG

This log identifies those portions of this document which have been revised since the original issue. Revised portions of each page, for the current revision only, are identified by marginal striping.

Revision	Paragraph Number(s) Affected	Rev. Date	Approval
Initial Issue		07/30/93	CM/GSR

(This page intentionally left blank.)

TABLE OF CONTENTS

SECTION / PARAGRAPH	TITLE	PAGE
1	SCOPE	1
2	APPLICABLE DOCUMENTS	3
2.1	Government Documents	3
2.1.1	Military	3
2.1.2	NASA	3
2.2	Non-Government Documents	4
2.2.1	Specifications:	4
2.2.2	Standards:	5
2.2.3	Drawings:	5
2.2.4	Other Publications:	5
3	REQUIREMENTS	7
3.1	Recorder Equipment Module Description	7
3.1.1	Recorder EM Functional Description	8
3.1.2	Interface Definition	8
3.1.2.1	Electrical Interfaces	8
3.1.2.2	Command and Telemetry Interfaces	11
3.1.2.3	Mechanical Interface	12
3.1.2.4	Thermal Interface	13
3.1.3	Major Component List	14
3.2	Characteristics	15
3.2.1	Performance	15
3.2.1.1	Data Processing and Distribution	15
3.2.1.2	Communications Requirements	15
3.2.1.3	Telemetry Data Recording	16
3.2.2	Physical Characteristics	16
3.2.2.1	Mass	16
3.2.2.2	Power Consumption	16
3.2.2.3	Power Dissipation	17

TABLE OF CONTENTS (Continued)

SECTION / PARAGRAPH	TITLE	PAGE
3.2.2.4	Dimension	17
3.2.2.5	Transport and Storage	17
3.2.2.6	Integration and Test	17
3.2.2.7	Layout	18
3.2.2.8	Configuration	18
3.2.2.9	Natural Frequency	19
3.2.3	Reliability	19
3.2.4	Durability	19
3.2.5	Maintainability	19
3.2.6	Environmental Conditions	19
3.2.6.1	General	19
3.2.6.2	Sine Vibration	19
3.2.7	Transportability	20
3.3	Design and Construction	20
3.3.1	Materials, Processes, and Parts	20
3.3.2	Electric Fields	20
3.3.3	Magnetic Fields	20
3.3.4	Nameplates and Product Marking	21
3.3.5	Workmanship	21
3.3.6	Safety	21
3.3.7	Human Performance/Human Engineering	21
3.4	Documentation	22
3.4.1	Specifications	22
3.4.2	Drawings	22
3.4.3	Test Plans and Procedures	22
3.5	Precedence	22
4	QUALITY ASSURANCE PROVISIONS	23
4.1	General	23
4.1.1	Responsibility for Tests	23

TABLE OF CONTENTS (Continued)

SECTION / PARAGRAPH	TITLE	PAGE
4.1.2	Special Tests and Examinations	23
4.1.3	Reliability Test	23
4.1.4	Engineering Evaluation and Test	23
4.1.5	Protoflight Test	23
4.1.6	Installation Test and Checkout	24
4.1.6.1	Electrical Integration and Checkout (EIC)	24
4.1.6.2	Interface Unit Functional Test (FT)	25
4.1.6.3	Comprehensive Performance Test (CPT)	25
4.1.6.4	Interface Verification Test (IVT)	25
4.1.7	Formal Test Verification	25
4.2	Quality Conformance Inspections	25
4.2.1	Method of Verification	25
4.2.1.1	Inspection	25
4.2.1.2	Analysis	26
4.2.1.3	Demonstration	26
4.2.1.4	Test	26
4.2.1.5	Classification of Characteristics	26
4.2.1.6	Test Equipment	26
5	PREPARATION FOR DELIVERY	29
5.1	General	29
6	NOTES	31
6.1	Definitions	31
6.2	Abbreviations and Acronyms	31
6.3	Exceptions to the GIS and GIIS	32
6.4	Requirements Traceability Matrix	32

APPENDIX I

10	ELECTRICAL CONNECTOR CONTACT ASSIGNMENTS	33

LIST OF FIGURES

FIGURE	TITLE	PAGE
1	Recorder EM Component Locations	9
2	Recorder EM Functional Block Diagram	10
3	Power Distribution in the Recorder EM (REM)	11
4	SSR/CTIU Interface Connections	13
5	Recorder EM Integration And Test Flow	24
6	SSR/EM Interface Bracket	34

LIST OF TABLES

TABLE	TITLE	PAGE
I	Recorder EM Subsystem Functions	7
II	Recorder EM Components	14
III	Recorder EM Power Consumption (Watts)	16

TBD LOG

ITEM	SECTION	PAGE	SUBJECT	RESP.	DUE
TBD–1	2.1.2	3	Contract Date for MISR UIID	GSFC	S/C PDR
TBD–2	2.1.2	3	Contract Date for MOPITT UIID	GSFC	S/C PDR
TBD–3	Table III	16	Heater Power Consumption for EM	C. Scott	30 Dec 93
TBD–4	3.2.2.6	18	EM Ground Cooling Method	Scott/Shade	30 Dec 93
TBD–5	Appx I	33	Circuit Category Definitions	S. Holaday	30 Sep 93

TBR LOG

ITEM	SECTION	PAGE	SUBJECT	RESP.	DUE
TBR–1	Appx I	33	Contact Number Assignments	S. Holaday	31 Mar 94

1 SCOPE

This specification establishes the performance, design, development, and test requirements for the recorder equipment module (REM) critical item. The recorder EM shall meet all the applicable requirements of the Contract End Item (CEI) Specification for the EOS Spacecraft, PS20005396 (SEP-101), throughout its design life. The principal requirement of modularity to facilitate Spacecraft construction, maintenance and serviceability is satisfied by this module design. The equipment module will be designed to facilitate producibility, integration, and accessibility to the internal components while minimizing weight. The equipment module will be modular to allow on-ground removal and replacement onto the Spacecraft core.

(This page intentionally left blank.)

2 APPLICABLE DOCUMENTS

2.1 Government Documents

The following documents of the exact issue shown, form a part of this specification to the extent specified herein. In the event of conflict between the documents referenced herein and the contents of this specification, the contents of this specification shall take precedence, except as defined in Section 3.5 herein.

2.1.1 Military

MIL-STD-1553B 8 September 1986	Aircraft Internal Time Division Command/Response Multiplex Data Bus, Change Notice 2

2.1.2 NASA

421–12–11–01 29 January 1993	Unique Instrument Interface Document for the Advanced Spaceborne Thermal Emission and Reflection Radiometer (ASTER)
421–12–04–01 6 November 1992	Unique Instrument Interface Document for the Moderate–Resolution Imaging Spectroradiometer (MODIS) – Rev A, CH–01 and CH–02
421–12–12–02 Rev A., Mar 93	Unique Instrument Interface Document for the Clouds and the Earth's Radiant Energy System (CERES)
421–12–03–02 **(TBD–1)**	Unique Instrument Interface Document for the Multi–Angle Imaging Spectro–Radiometer (MISR)
421–12–15–02 **(TBD–2)**	Unique Instrument Interface Document for the Measurement of Pollution in the Troposphere (MOPITT)
NHB 5300.4 (3A-1) December 1976	Requirements for Soldered Electrical Connections
NHB 5300.4 (3G) April 1985	Requirements for Interconnecting Cables, Harnesses, and Wiring
NHB 5300.4 (3H) May 1984	Requirements for Crimping and Wire Wrap
NHB 5300.4 (3I) May 1984	Requirements for Printed Wiring Boards

NHB 5300.4 (3J) April 1985	Requirements for Conformal Coating and Staking of Printed Wiring Boards and Electronic Assemblies
NHB 5300.4 (3K) April 1985	Design Requirements for Rigid Printed Wiring Boards and Assemblies

2.2 Non-Government Documents

The following documents of the latest issue, form a part of this specification to the extent specified herein. In the event of conflict between the documents referenced herein and the contents of this specification, the contents of this specification shall take precedence, except as defined in Section 3.5 herein.

2.2.1 Specifications:

IS20008501	General Interface Specification for the EOS–AM Spacecraft (ICD-101)
PN20005397	Performance Assurance Implementation Plan (PAIP)
PN20005869	Electromagnetic Compatibility (EMC) Control Plan, (SEP-106)
PN20001411	Recorder Equipment Module Test Plan
PN20001412	EOS–AM Spacecraft Contamination Control Plan (SEP–107)
PS20001415	Performance Specification Structures and Mechanisms Subsystem (SMS)
PS20005396	EOS AM Spacecraft Contract End Item Specification, SEP-101
PN20005297	EOS–AM Performance Assurance Implementation Plan (PAIP) (PA–100)
PS20005404	EOS–AM Spacecraft Verification Specification (VRD-110)
PS20008549	Performance Specification Thermal Control Subsystem (TCS)
PS20008567	Performance Specification Command and Data Handling Subsystem (C&DHS) (SP–301)
PS20008568	Performance Specification Bus Data Unit (BDU) (SP–302)

PS20008569	Performance Specification, Command and Telemetry Interface Unit (CTIU) (SP–302)
PS20008575A	Critical Item Development Specification Science Formatting Equipment (SFE) (SP–302)
PS20008580	Performance Specification Communications Subsystem (COMS)
PS20008588	Performance Specification, KSA Modulator (SP–402)
PS20008589	Performance Specification, DAS Modulator (SP–402)
PS20008636	Performance Specification Electrical Accommodations Subsystem (EAS)
PS20008694	Performance Specification Fuse and Distribution Box (FDB)
PS20008785	Performance Specification Heater Controller Electronics – Type 2 (HCE2)
PS20038286	Critical Item Development Specification Solid–State Recorder (SSR) (SP–302)
Source:	Martin Marietta Astro Space P. O. Box 800 Princeton, NJ 08543–0800

2.2.2 Standards:

S32534, Rev. E	Identification Marking
Source:	Martin Marietta Astro Space P. O. Box 800 Princeton, NJ 08543–0800

2.2.3 Drawings:

20008536 13 January 1993	EOS AM Spacecraft Observatory Specification Tree
20001411G1	Recorder Equipment Module Assembly Drawing
Source:	Martin Marietta Astro Space P. O. Box 800 Princeton, NJ 08543–0800

2.2.4 Other Publications:

20001430	Ground Support Equipment Requirements Document (SEP–104)

20004280	Subcontractor Performance Assurance Requirements
20038240	Recorder Equipment Module Harness
ICD20008568	Interface Control Document, Bus Data Unit
ICD20008569	Interface Control Document Command and Telemetry Interface Unit
ICD20008575	Interface Control Document Science Formatting Equipment
ICD20008588	Interface Control Document KSA Modulator
ICD20008589	Interface Control Document DAS Modulator
Source:	Martin Marietta Astro Space P. O. Box 800 Princeton, NJ 08543–0800

3 REQUIREMENTS

The recorder EM shall meet all performance requirements specified herein under all combinations of environmental conditions and input voltages described and after exposure to the launch environment described herein. All requirements are end-of-life (EOL) specifications unless stated otherwise.

3.1 Recorder Equipment Module Description

The recorder EM contains elements of several Spacecraft subsystems. These subsystems and their major functions performed within the EM are described in Table I.

Table I. Recorder EM Subsystem Functions

Subsystem and Performance Specification	Major EM Subsystem Functions
Command and Data Handling Subsystem (C&DH) PS20008567	- Provides standardized data interfaces to the Instruments - Provides high–rate data formatting, routing, recording and playback - Provides a telemetry data backup recording function
Communications Subsystem (COM) PS20008580	- Provides a redundant Ku-band single access modulator channel - Provides two redundant X-band direct access modulator channels
Electrical Power Subsystem (EPS) PS20004749	- Provides power distribution and fusing for all local 120 volt users via fuse distribution box
Thermal Control Subsystem (TCS) PS20008549	- Provides heaters, sensors, and control for maintaining EM temperatures
Electrical Accommodations Subsystem PS20008636	- Provides the harness and connections for electrical components - Grounding and signal reference connections.
Structures & Mechanisms Subsystem PS20001415	- Provides mounting and protection for subsystem components - Provides a thermal path to carry dissipated component power

3.1.1 Recorder EM Functional Description

The recorder EM primarily contains the science data formatting, recording and routing functions, the telemetry recording function, the Ku-band single access, and the X–band direct access modulating functions of the Communications Subsystem Specification (PS20008580). The recorder EM also houses the associated power, thermal, and C&DH control and interface equipment.

The components used to provide these functions are a redundant solid state recorder (SSR) (PS20038286), consisting of two separately mounted control and memory units, the science formatting equipment (SFE – PS20008575), two Ku-band single–access modulators (KSA Mod – PS20008588), and two Direct Access System modulators (DAS Mod – PS20008589). Telemetry data recording is accomplished within the SSR. Non-science–data handling components included in this module are a bus data unit (BDU – PS20008568), which provides the control and telemetry interfaces for all equipment in the module; heater control electronics boxes (HCE2 – PS20008550), which interfaces with the thermal control subsystem (PS20008549); and a fuse and distribution box (FDB – PS20008694) which interfaces with the Spacecraft primary power bus. An isometric diagram of the recorder EM showing component locations is presented for information only in Figure 1. Figure 2 shows a functional block diagram of the recorder EM.

3.1.2 Interface Definition

[1] The Recorder Equipment Module and all included components shall use the standard interfaces defined in the General Interface Specification (GIS) for the Earth Observing System, IS20008501, unless all exceptions to the GIS are explicitly noted in the affected component specification(s) or in this document.

3.1.2.1 Electrical Interfaces

Electrical connections between and among the components of all subsystems within the module are part of the EM harness design.

[1] An electrical interface connector bracket attached to the +Z panel shall support all module harness interface connectors required to mate with the bus harness.

[2] All electrical interfaces between the spacecraft and the recorder EM shall meet the requirements of the GIS Section 3 (IS20008501) regarding power, grounds, standard signal interfaces, test points, connectors and pin allocations.

[3] The Equipment Module shall meet the requirements specified for spacecraft equipment in Equipment/Subsystems EMI Requirements section of PN20005869 (EMC Control Plan).

[4] All electrical connections between the components in the recorder EM and between the recorder EM and the spacecraft core shall be accomplished through the use of interconnecting cables as described in the recorder EM harness installation drawing, 20038240.

[5] These cables and connections shall meet the Harness Design and Construction requirements of the Electrical Accommodations Subsystem Performance Specification, PS20008636.

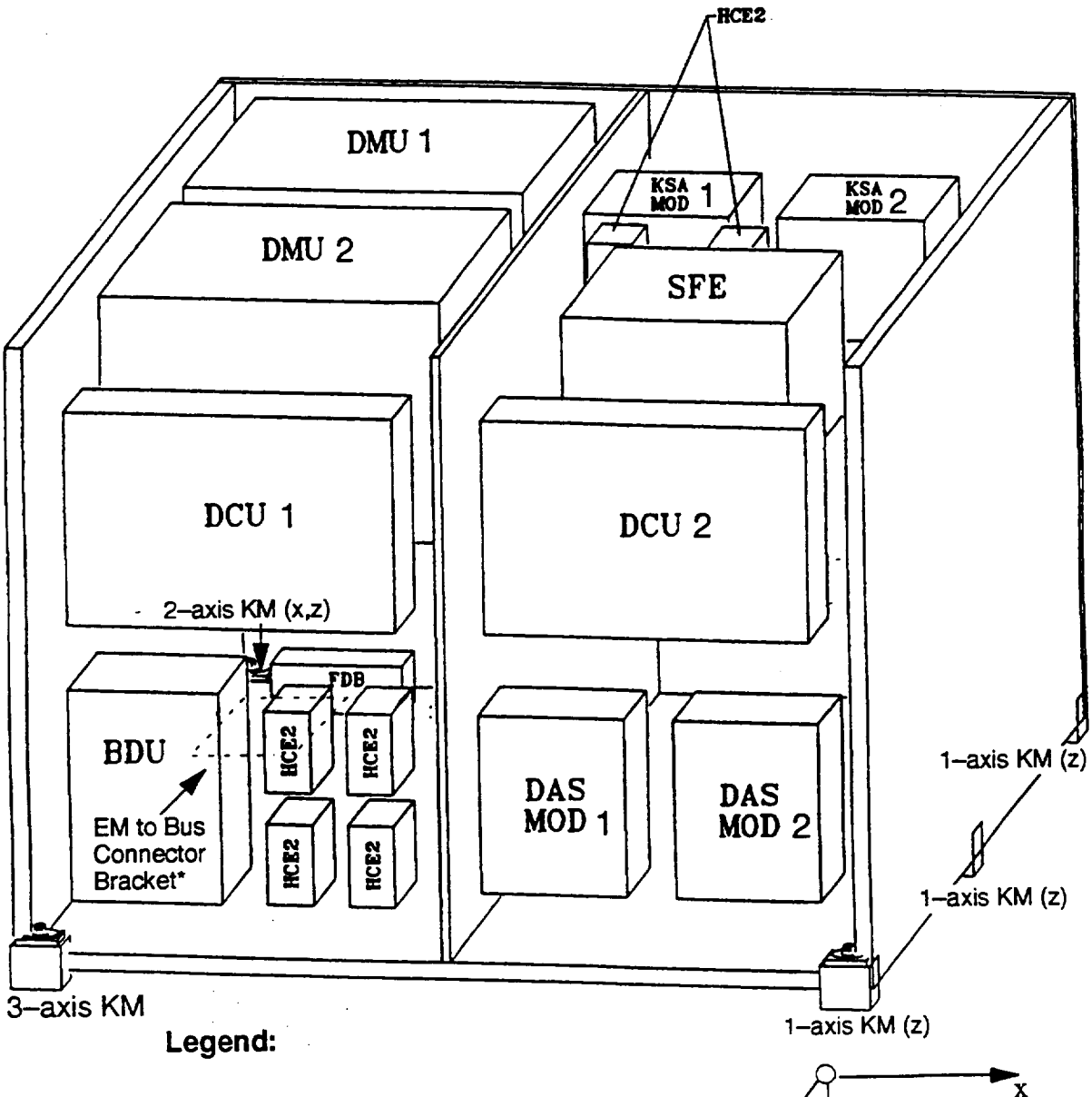

Legend:

BDU	Bus Data Unit
FDB	Fuse and Distribution Board
HCE2	Heater Control Electronics
KSA MOD	Ku-band Single Access Modulator
DAS MOD	X-band Direct Access Modulator
SFE	Science Formatting Equipment
DCU	Data Control Unit (part of SSR)
DMU	Data Memory Unit (part of SSR)
KM	Kinematic Mount

*Bracket is mounted to outside of EM panel, connector interface faces –Y

Figure 1. Recorder EM Component Locations

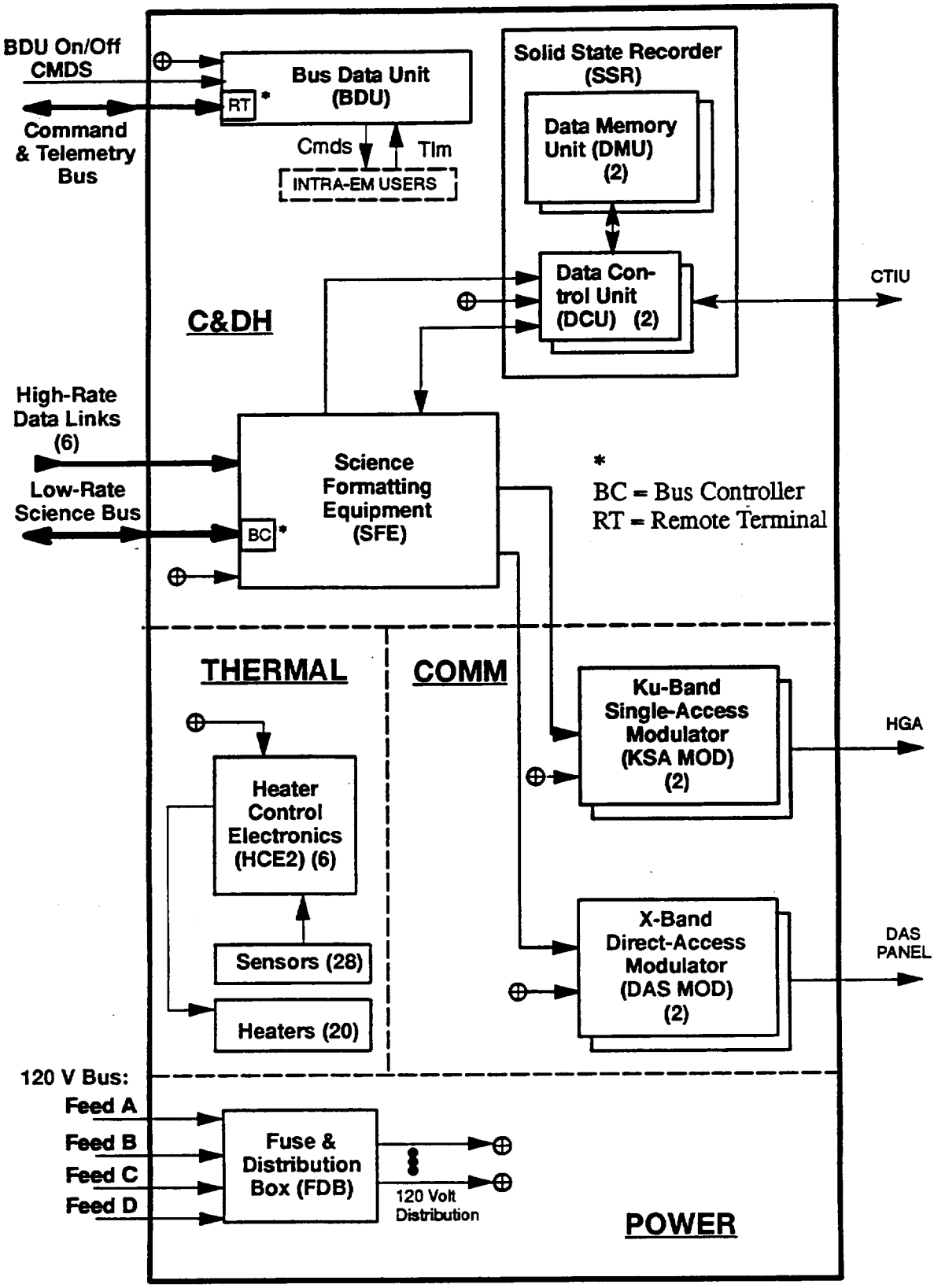

Figure 2. Recorder EM Functional Block Diagram

3.1.2.1.1 Spacecraft Power Bus Interface

[1] The recorder EM shall accept prime power voltage at 120 volts dc with a regulation of ±4%. Prime power is defined as the main Spacecraft bus power feeding the recorder EM.

[2] The recorder EM shall connect to the 120V Spacecraft power bus via four power feeds as shown in Figure 3.

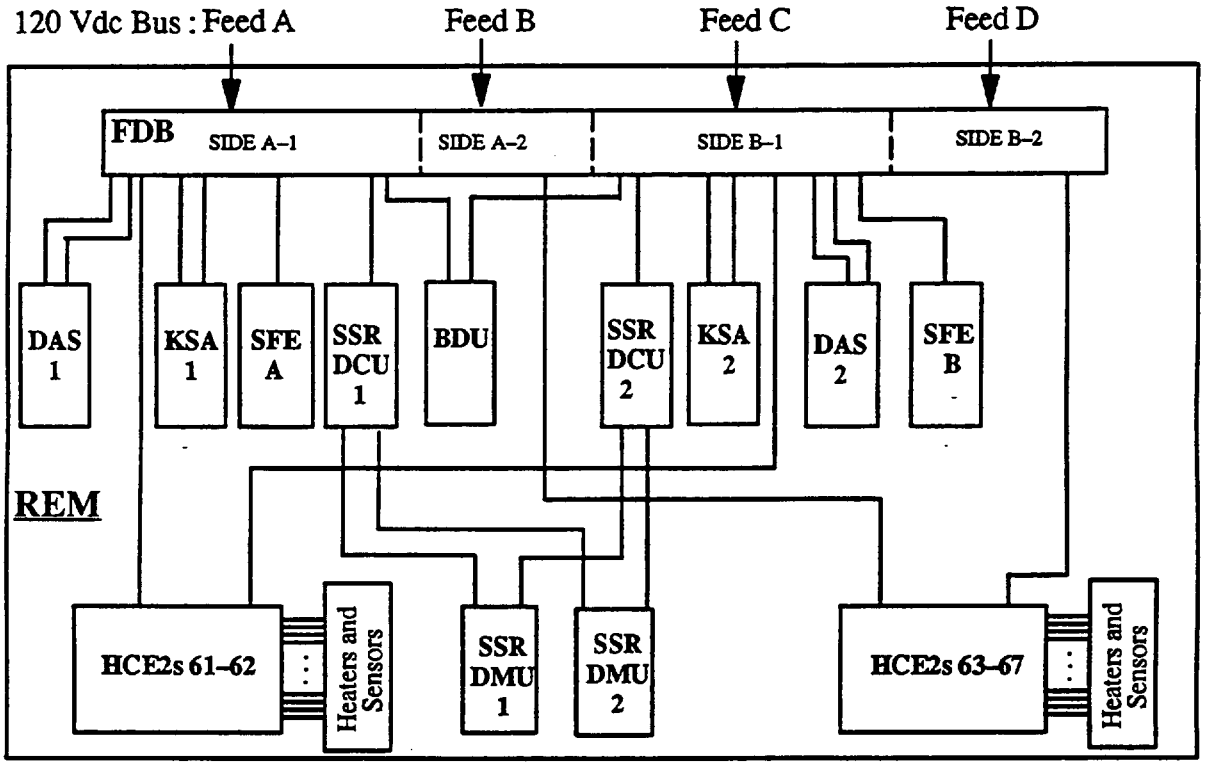

Figure 3. Power Distribution in the Recorder EM (REM)

3.1.2.1.2 High Gain Antenna Interface

[1] The KSA modulator shall interface to the high gain antenna as specified in ICD20008588, Performance Specification KSA MOD.

3.1.2.1.3 Direct Access Service Panel Interface

[1] The DAS modulator shall interface with the X-Band direct access panel as specified in ICD20008589, Performance Specification DAS MOD.

3.1.2.2 Command and Telemetry Interfaces

[1] The recorder EM interface to the Spacecraft command and telemetry bus shall be a redundant MIL-STD-1553B bus.

[2] The Command and Telemetry bus shall be transformer coupled using twisted shielded pair wiring connections.

[3] The BDU shall interface to both the A and B Spacecraft command and telemetry buses.

[4] The BDU shall distribute commands to, and collect telemetry from, all components located in the recorder EM.

The BDU performance will be as specified in the BDU Performance Specification, PS20008568.

3.1.2.2.1 Command Inputs

The format, function, and timing of the various commands for all the REM components are listed in an appendix to the respective performance specifications of each component.

3.1.2.2.2 Telemetry Outputs

The format, function, and timing of the various telemetry for all the REM components are listed in an appendix to the respective performance specifications of each component.

3.1.2.2.3 Telemetry Data Interface to Command and Telemetry Interface Unit (CTIU)

[1] Cross-strapped bidirectional data interfaces shown in Figure 4 shall be provided for the serial digital data to and from the DCUs of the SSR and the CTIUs.

[2] The electrical interface shall conform to the RS-422 requirements of IS20008501.

The telemetry data rate into the SSR is 16 kbps with a playback rate to the CTIU of 256 or 512 kbps.

3.1.2.3 Mechanical Interface

[1] The recorder equipment module shall be mounted to the primary structure via one 3-axis, one 2-axis and three single axis kinematic mounts.

[2] Access to the module components at the Spacecraft level of assembly shall be possible by removal of the -Y panel.

[3] Removal of this panel shall not require the removal of any other Spacecraft equipment.

[4] The recorder EM structure shall comply with the requirements of the SMS Performance Specification PS20001415 regarding coordinate systems, physical characteristics, design and construction, mounting, positioning, mechanisms, dynamic characteristics, structural criteria, and tooling.

[5] The honeycomb core of the REM shall shall be densified locally to ensure that throughout testing no component internal to the EM experiences accelerations greater than 1.25 times those defined in the Predicted Limit Loads figure of the General Interface Specification (GIS), IS20008501.

[6] The equipment module shall be designed so it can be independently assembled, tested, attached or detached from the EOS Spacecraft structure without requiring disassembly of thermal control subsystem hardware.

[7] The EM panels shall provide adequate strength at fastener locations for the mechanical mounting of components and assemblies listed in Table II.

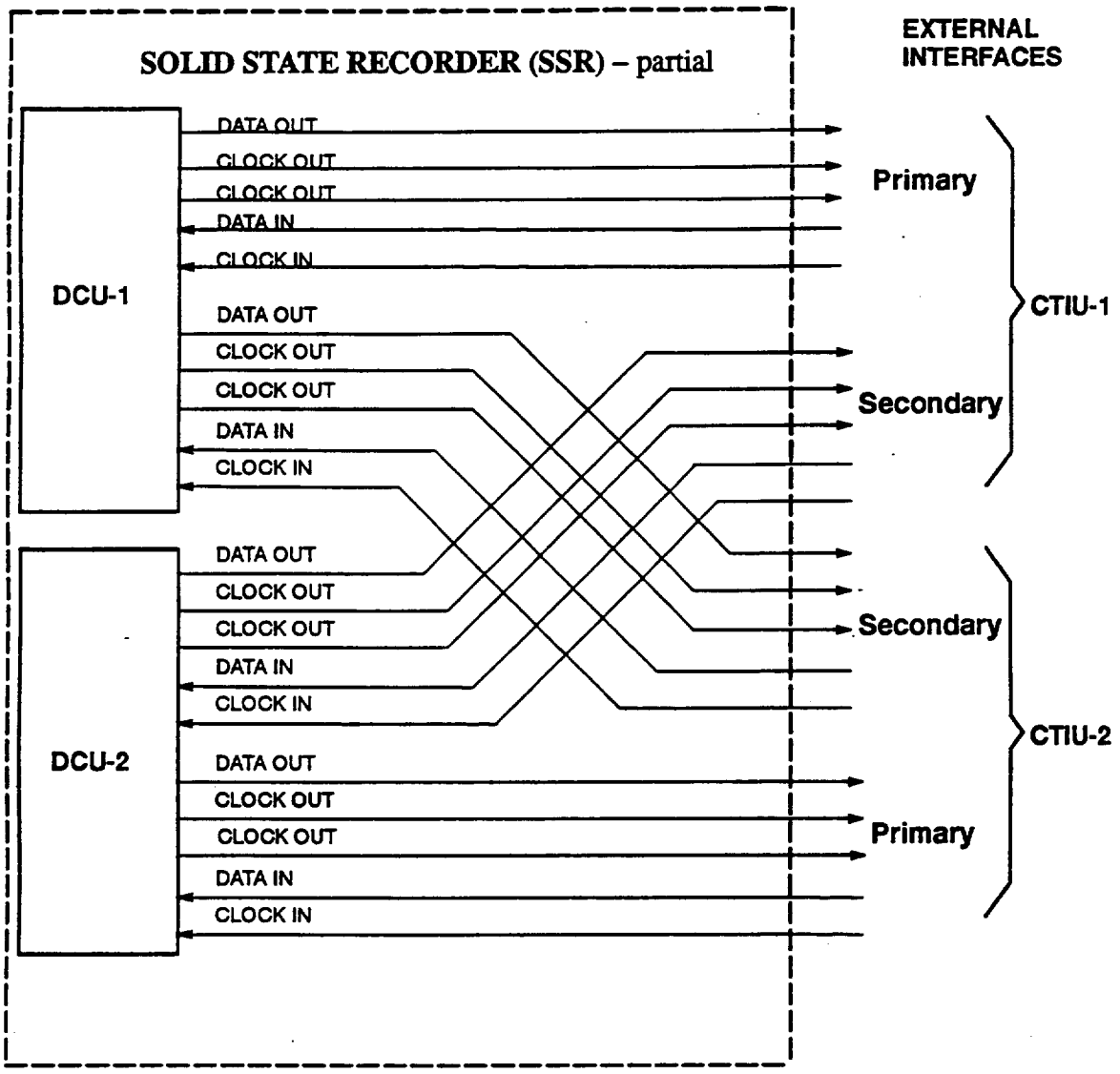

Figure 4. SSR/CTIU Interface Connections

3.1.2.4 Thermal Interface

[1] All thermal control hardware (heaters, MLI, etc.) in the recorder equipment module shall meet the thermal control hardware requirements of the GIS, IS20008501, Section 5, Thermal Interfaces.

[2] The Flight Hardware Component Characteristics shall be as specified in the Thermal Control Subsystem (TCS) Performance Specification, PS20008549.

[3] The REM shall acquire, spread, and reject component heat to the external Space sink as necessary to maintain the temperature at each component interface to levels below the maximum limits specified in the Temperature Requirements table in Section 5 of the GIS, IS20008501. (Constant conduction heat pipes embedded into the panel itself may be incorporated into the –Z and +Y panels of the EM to meet this purpose.)

[4] The heater control electronics (HCE2), using heaters and thermistors in the EM, shall maintain the temperature at each component interface to levels above the minimum limits specified in the Temperature Requirements table in Section 5 of the GIS, IS20008501.

[5] Heat dissipating components shall meet the EM/Component Conductive Interface requirements in the GIS, IS20008501, Section 5.

[6] Temperature Sensing Assemblies shall be connected to the BDU for tracking thermal conditions on the REM.

3.1.3 Major Component List

The major components of the recorder EM are listed in Table II. Each component of the recorder EM shall meet the requirements imposed on it by its parent subsystem's performance specification.

Table II. Recorder EM Components

Subsystem	Component	Part Number
C&DH	Bus Data Unit (BDU) Science Formatting Equipment (SFE) Solid State Recorder (SSR) Data Control Unit (DCU) (2) Data Memory Unit (DMU) (2)	20008568 20008575 20038286
Communications	Ku-Band Single Access Modulator (KSA) (2) X-Band Direct Access Modulator (DAS) (2)	20008588 20008589
Power	Fuse & Distribution Box (FDB)	20008694
Thermal	Heater Control Electronics (HCE2) (6) Temperature Sensors Temp. sensing Assys. Heaters	20008785 20008790 20008791 20008788
Electrical Accommodations	Recorder Equipment Module Harness (including all connectors)	20038240
Structures and Mechanisms	Secondary Structure Access Panel –Y Bulkhead Panel Assembly Equipment/Radiator Panel Assembly -Z Equipment/Radiator Panel Assembly +Y End Panel +X, -X Kinematic Mounts (5)	20008884 20008885 20008887 20008886 20008889 20008888 20001400

3.2 Characteristics

3.2.1 Performance

3.2.1.1 Data Processing and Distribution

3.2.1.1.1 Data Formats

The data formats for both the high– and low–rate instrument data into and out of the science formatting equipment (SFE), are contained in PS20008575.

3.2.1.1.2 Data Rates

Data is sent from the instruments to the SFE at the rates specified in each instrument UIID.

3.2.1.1.3 Data Routing

[1] The REM shall accept high–rate science data from the instruments for routing to the SFE via dedicated, point-to-point serial links.

[2] The REM shall accept low–rate science data from the instruments via a 1553B data bus for routing to the SFE.

[3] When the SFE receives science data, high–rate or low–rate, from the instruments it shall format and multiplex it into a data stream in accordance with the SFE performance specification, PS20008575.

[4] This stream shall then be routed to one or more of the following equipments: the SSR, the KSA Modulators, or the DAS Modulators in accordance with commands received from the Spacecraft control computer (SCC) or the ground via the BDU in the recorder EM. ICD20008575 (SFE ICD) contains a listing of these commands.

3.2.1.2 Communications Requirements

3.2.1.2.1 Ku-Band Single Access

[1] The REM's two KSA modulators shall interface with the SFE via a four–bit–wide data path and data clock.

[2] The REM shall also interface with the high gain antenna (HGA) for transmission via the Tracking and Data Relay Satellite System (TDRSS). Operating characteristics for the modulator are contained in PS20008588.

3.2.1.2.2 Direct Access System

[1] The REM's two DAS modulators which interface with the SFE on the same EM via two four–bit–wide data paths plus data clock for each as described in ICD20008575.

[2] The DAS modulators shall interface with the X–Band Direct Access System panel per ICD20008589.

3.2.1.3 Telemetry Data Recording

[1] The EM shall record telemetry data by means of two telemetry channels from the SSR's DCUs which interface with the CTIUs located in the C&DH EM. The interface characteristics are contained in the CTIU ICD, ICD20008569.

3.2.2 Physical Characteristics

3.2.2.1 Mass

[1] The mass of the recorder EM shall not exceed 970 lbs.

3.2.2.2 Power Consumption

[1] The power consumption for the recorder EM for the different EOS spacecraft operating modes shall not exceed the values specified in Table III.

Table III. Recorder EM Power Consumption (Watts)[1]

Component	Ground Test and Launch/ Ascent Mode	Standby Mode	Delta–V Mode	Science Mode			Survival Mode	Safe Mode[7]	
				Max	Nomi-nal	Min[4]		Max	Min
POWER CONSUMPTION:									
BDU	9.2	9.2	9.2	9.2	9.2	9.2	9.2	9.2	9.2
SFE	90	90	90	90	90	90	0	90	0
DCU1[6]	45.8	45.8	45.8	45.8	45.8	45.8	45.8	45.8	45.8
DCU2[6]	8.2	8.2	8.2	8.2	8.2	8.2	8.2	8.2	8.2
DMU1[6]	test only	60	60	60	60	48.2[7]	0	60	0
DMU2[6]	test only	60	60	60	60	48.2	0	60	0
KSA1(3)	test only	18.2	18.2	22.6[5]	18.2	13.8[4]	0	18.2	0
KSA2	test only	0	0	0	0	0	0	0	0
DAS1	test only	54.1	54.1	54.1	54.1	54.1	0	54.1	0
DAS2	test only	0	0	0	0	0	0	0	0
FDB	0	0	0	0	0	0	0	0	0
HCEs[2]	3.3	3.3	1.7	1.7	1.7	1.7	3.3	3.3	1.7
Heaters	(TBD–3)	(TBD–3)	(TBD–3)	(TBD–3)	(TBD–3)	(TBD–3)	(TBD–3)	(TBD–3)	(TBD–3)
Total EM:		348.8+	347.2+	351+	347.2+	319.2+	66.5+	348.8+	66.5+

(1) Maximum allowable one orbit average power allocations to satisfy performance requirements for the mode.

(2) Does not include TCS heater power. Power shown is the sum of the allocations for the 6 HCE2s.

(3) 20% duty cycle
(4) Assumes one missed TDRSS contact, so that there is a 10% transmit duty cycle.
(5) Assumes a 30% transmit duty cycle
[6] Power is delivered to the DMUs via the DCUs
[7] Assumes none of the instruments are collecting science data.

3.2.2.3 Power Dissipation

[1] The thermal dissipation of the REM components shall be equal to the power consumption described in Table III except for the for the following components:

a. FDB dissipation shall be no greater than 1.1W in any mode, and
b. Power harness dissipation shall be no greater than 0.6W in any mode.

3.2.2.4 Dimension

The dimensions of the recorder EM shall not exceed the maximum dimensions given below, including connectors, as defined in assembly drawing 20001411G1.

Length (X)	52.5 inches
Width (Y)	70.65 inches
Height (Z)	39.7 inches

3.2.2.5 Transport and Storage

[1] Accommodations for tie-downs, pallets,packaging, and other handling fixtures necessary for transport and storage of the equipment module shall be made to ease handling by and interaction with ground support equipment (GSE).

[2] The proper orientation for placing items in storage or transportation containers shall be obvious by design or marking.

[3] The Recorder EM shall provide lift points capable of supporting the Recorder EM and any accompanying GSE under handling loads of 2g vertical (per MIL–STD–1367A).

[4] When four or more lift points are provided, any combination of three shall be capable of lifting the entire load.

[5] Lift points for the EM shall be chosen such that their use does not hamper the installation of the EM on the spacecraft structure. (e.g., lift points and mounting points cannot be the same points.)

3.2.2.6 Integration and Test

[1] The Recorder EM shall supply test points via the interface connector for modulated IF outputs from the KSA and DAS modulators.

[2] Recorder EM design shall ensure that access to the interface connector is sufficient to preclude the need for blind–mate connectors during installation of the Recorder EM on the Spacecraft Core.

[3] Ground cooling of the EM shall be accomplished by **(TBD–4)**.

[4] Items which for safety reasons may require rapid pre-launch maintenance shall be readily accessible.

[5] Items requiring frequent access during I&T or other prelaunch operations shall be accessible during I&T.

[6] Command and housekeeping telemetry capabilities shall be available both with and without RF links.

3.2.2.7 Layout

[1] Fuses for the Recorder EM shall be located, to the extent practical, such that it is possible to replace or view any fuse without requiring any disassembly of the EM.

[2] The Recorder EM layouts shall, to the extent practical, ensure that any component contained the Major Assembly can be removed without having to remove any other component.

[3] Component spacings shall provide adequate clearance for harness runs.

[4] All flight equipment which would require maintenance during a storage period of 5 years or less shall be accessible when the Spacecraft is in its stored configuration.

[5] All Spacecraft components which are fragile or otherwise susceptible to damage shall, where practical, be guarded or located so as to reduce this susceptibility.

[6] Sensitive adjustment controls and actuators shall be located or guarded to protect them from inadvertent perturbation.

[7] Component labeling shall be visible when the component is installed in the parent assembly or stowed. Labels shall be installed such that they are readable by the unaided human eye.

3.2.2.8 Configuration

[1] The EM shall conform to the assembly drawing 20001411G1. These drawings shall define the following parameters:

a. Physical size
b. Mounting Requirements and interfaces
c. External finishes
d. Electrical connector locations and sizes
e. Connectors reference designators
f. Method of identification

[2] The EM structure shall provide shielding equivalent to 40 mil of Aluminum for the internal components against the charged particle environments specified in the GIS, IS20008501.

3.2.2.9 Natural Frequency

[1] The natural frequency of the Recorder EM shall be no less than the level specified in the appendix to the Structures and Mechanisms Subsystem Performance Specification, PS20001415.

3.2.3 Reliability

The probability of mission success (Ps) is allocated to the individual subsystems and their components. This information may be found in the applicable Performance specifications.

3.2.4 Durability

[1] The recorder EM shall operate as specified herein for at least a five–year operational life.

3.2.5 Maintainability

[1] The recorder EM shall be designed so that no regular maintenance will be required.

[2] Removable dust covers or other protective devices shall be provided over electrical connectors.

3.2.6 Environmental Conditions

3.2.6.1 General

[1] The recorder EM shall be capable of meeting the requirements defined in this document after exposure to the handling, transportation, and launch environments defined in the GIS, IS20008501 Section 6,

[2] and to the test environments defined in the Verification Specification (VS), IS20005404.

[3] The recorder EM shall be capable of meeting the requirements defined in this document during exposure to the mission orbit environment specified in the GIS, IS20008501 Section 6.

[4] The recorder EM shall be capable of meeting all performance requirements when operating in Spacecraft bay 2 on the –Z side of the Spacecraft.

[5] The EM shall comply with the requirements of the Contamination Control Plan, PN20001412.

3.2.6.2 Sine Vibration

[1] The REM shall remain undamaged during and following exposure to the sine vibration tests defined in the appendix to the Structures and Mechanisms Subsystem Performance Specification, PS20001415.

[2] The EM structure shall ensure that no component internal to the EM experiences accelerations greater than 1.25 times those defined in the Predicted Limit Loads figure of the General Interface Specification (GIS), IS20008501 when the EM experiences the test levels defined above.

3.2.7 Transportability

[1] The recorder EM shall be capable of being transported by surface vehicle or aircraft.

[2] The transporting environment shall be controlled so as to be less severe than the specified operating environment.

3.3 Design and Construction

[1] Its design shall be such that it can be independently assembled, tested, and attached to or detached from the EOS AM Spacecraft structure.

[2] The recorder EM design shall preclude improper installation to the Spacecraft, where practical.

[3] All electrical connectors shall be selected, sized, keyed, and/or marked such that incorrect attachment to the mating connector is prevented.

[4] All connectors shall attach such that the connectors cannot be inadvertently unlocked during ground operations.

[5] The EM design shall comply with the Design and Construction requirements specified in the GIS, IS20008501, for General requirements, Identification and Marking except for the Content paragraph, Finishes, Venting, Interchangeability, and Drawing Terms and Tolerances.

3.3.1 Materials, Processes, and Parts

[1] All materials, parts, and processes used in the design and construction of the recorder EM shall be selected and controlled in accordance with the requirements for Tooling in section 4 of the GIS, IS20008501.

3.3.2 Electric Fields

[1] Components shall meet the electric field emissions requirements in the Equipment Radiated Emissions (RE02, RE01/RE04) section of the Equipment EMI Requirements in the EMC Control Plan, PN20005869.

[2] Components shall meet the requirements of the Radiated Susceptibility (RS03) Electric Fields section and the

[3] Radiated Susceptibility On–Orbit Environment section of the Equipment EMI Requirements in the EMC Control Plan, PN20005869.

3.3.3 Magnetic Fields

[1] Components shall meet the magnetic field emission and

[2] magnetic properties requirements in the Equipment Radiated Emissions and Equipment Radiated Properties sections respectively of the Equipment EMI Requirements in the EMC Control Plan, PN20005869.

[3] Components shall meet the requirements of the Radiated Susceptibility (RS01) Magnetic Fields section of the Equipment EMI Requirements in the EMC Control Plan, PN20005869.

3.3.4 Nameplates and Product Marking

[1] The recorder EM shall be marked for identification in accordance with the Identification Marking Standard, S32534, and ICD 20001411.

[2] Conspicuous markings or labels shall be affixed to the recorder EM components. The identification shall contain, as a minimum, the following:

a. Astro Space Part Number
b. "Recorder Equipment Module"
c. Revision Level
d. Date of Manufacture
e. Contract Number

[3] Applicable date-sensitive information shall also be identified.

[4] Hardware or equipment which is not suitable for use in flight, and which could be accidentally substituted for flight or flight spares hardware, shall be plainly marked and identified to indicate this status.

[5] All test points, adjustment devices, and alignment points shall be labeled for positive identification.

[6] Wires and cables for hardware shall not be identified by hot stamping directly onto primary or secondary (shield) insulation.

3.3.5 Workmanship

[1] The electrical design of the recorder EM shall be in accordance with the design requirements specified in NHB 5300.4 (3A-1, 3G through 3K).

3.3.6 Safety

[1] The design shall meet the factors of safety presented in the mechanical section of IS20008501.

[1] Where practical, hazards shall be eliminated or removed through design measures.

[1] Hazards which cannot be eliminated or removed shall, where practical, be prevented through incorporation and use of safety devices or features.

[1] Remaining hazards shall be controlled using warning devices and/or special procedures.

[1] Automated detection and safing of hazards which may cause personnel injury or loss of the Spacecraft shall be independent of those subsystems being monitored.

[1] Where practical, the detection and safing of lesser hazards shall also follow this practice.

[1] Design decisions shall accommodate compliance with safety requirements specified in this document before accommodating any other considerations (e.g., cost, schedule, performance).

3.3.7 Human Performance/Human Engineering

[1] The recorder EM shall comply with the human engineering criteria of MIL-STD-1472.

3.4 Documentation

Documentation shall be in accordance with the Data Requirements list of the EOS-AM Spacecraft Statement of Work (SOW), contract number NAS5-32500.

3.4.1 Specifications

All parent and component specs associated with this spec are shown in the EOS-AM Spacecraft Specification Tree, 20008536.

3.4.2 Drawings

[1] The recorder EM shall be defined by prepared drawings. Drawing 20001411G1 shall define and control the physical parameters of the EM,

[2] and drawing 20038240 shall describe the EM harness.

3.4.3 Test Plans and Procedures

[1] Detailed qualification and acceptance test plans and procedures shall be prepared.

3.5 Precedence

In the event of conflicting requirements between the documents referenced herein and the content of this document, the following descending order of precedence shall be used in resolution of the conflict:

a. Requirements Document for the EOS AM Spacecraft (RD)
b. Performance Assurance Requirements for the EOS Observatories (PAR)
c. Unique Instrument Interface Documents
d. The General Instrument Interface Specification (GIIS)
e. Contract End Item (CEI) Specification
f. External Interface Control Documents(ICD's) (e.g., EOS to Launch Vehicle, EOS to TDRSS, etc.)
g. Subsystem and Major Assembly Specifications
h. Component Specifications

4 QUALITY ASSURANCE PROVISIONS

This section outlines the requirements and structure of a quality assurance program for the recorder equipment module. The purpose of the program is to demonstrate the design of the equipment module and its components meets the performance requirements, has been manufactured properly, and will operate as designed in association with all other EOS AM Spacecraft interfaces. The Performance Assurance Implementation Plan (PAIP), PN20005397, documents the overall quality assurance approach for the EOS AM Spacecraft. The specifics of the performance verification process are documented in the Verification Plan, PN20005404.

4.1 General

This section delineates the inspections and tests which shall be performed in order to verify the equipment module conformance to the requirements of Section 3 of this specification. Test methods and measurements shall be compliant with all requirements specified herein.

4.1.1 Responsibility for Tests

Unless otherwise specified herein, or in the Statement of Work, acceptance and qualification testing shall be performed by Astro Space.

4.1.2 Special Tests and Examinations

Not applicable.

4.1.3 Reliability Test

Not applicable.

4.1.4 Engineering Evaluation and Test

Not applicable.

4.1.5 Protoflight Test

Protoflight tests, combined with the other verification methods listed in the Verification Matrix, Attachment A (provided under separate cover), shall verify that the flight hardware design meets the technical requirements of Section 3 of this equipment module specification to assure operational suitability in the defined environments. Protoflight test hardware shall be used for qualification testing and shall be identical in configuration and production processing to flight hardware.

Protoflight tests, where specified, shall consist of qualification level exposure of the first flight article for acceptance level durations (time and/or cycles)

Protoflight tests shall be performed under strict control of environments and test procedures. Adjustments or tuning of protoflight test hardware is not permitted throughout the entire test program. The requirements of Section 3 to be verified prior to, during, or after each environment shall be as specified in PN20008745.

4.1.6 Installation Test and Checkout

Installation testing and checkout shall include continuity checking, interface mating, support equipment compatibility, and documentation verification. The recorder Equipment Module integration and test flow is shown in Figure 5.

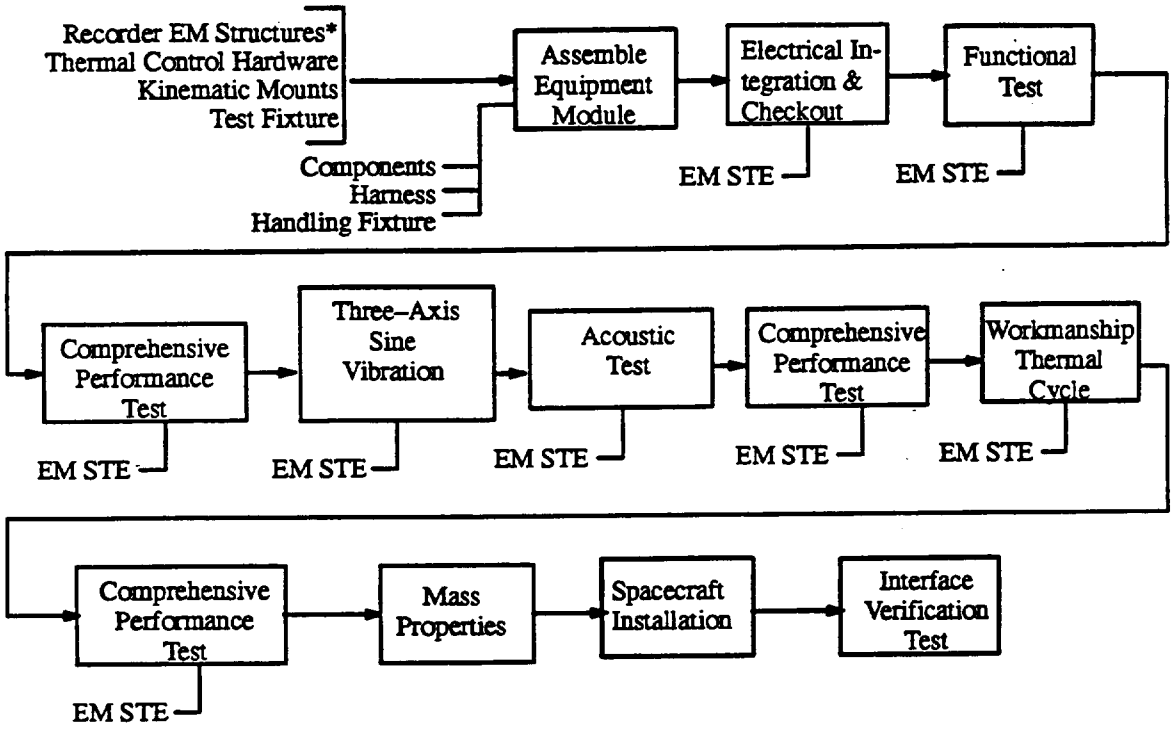

* Recorder EM Structures Strength Tested

Figure 5. Recorder EM Integration And Test Flow

4.1.6.1 Electrical Integration and Checkout (EIC)

An EIC shall be performed to verify the proper input and grounding of power, commands, and other signals prior to mating of flight hardware. The EIC shall also verify proper response to power, commands, and signal upon initial integration of flight hardware. The recorder EM components shall be integrated with the panel in the following order:

a. Recorder EM Harness
b. Fuse and Distribution Box
c. Heater Control Electronics (HCE2), Heaters and Sensors
d. Bus Data Unit (BDU)
e. Solid State Recorder – DCU–1 and DMU–1
f. Solid State Recorder – DCU–2 and DMU–2
g. Science Formatting Equipment (SFE)

h. Ku–Band Single–Access Modulator (KSA Mod)–1
i. Ku–Band Single–Access Modulator (KSA Mod)–2
j. X–Band Direct–Access Modulator (DAS Mod)–1
k. X–Band Direct–Access Modulator (DAS Mod)–2

4.1.6.2 Interface Unit Functional Test (FT)

A functional test of the recorder Equipment Module shall be performed to test command and data paths between components and to exercise prime and redundant hardware.

4.1.6.3 Comprehensive Performance Test (CPT)

A CPT shall be performed to verify that the recorder Equipment Module meets the performance requirements in all operational and contingency modes, as well as verifying all command and data paths and all redundant hardware.

4.1.6.4 Interface Verification Test (IVT)

An IVT shall be performed to verify the proper Equipment Module interfaces to the Spacecraft Bus. It verifies all power, ground, and signal connectors are properly mated and that there is signal presence on the proper connectors.

4.1.7 Formal Test Verification

Formal verification of the performance requirements of the recorder EM are in the Verification Matrix, Attachment A. The Verification Matrix identifies the verification method as specified herein and the level at which tests are conducted. The recorder EM shall be tested according to the Recorder EM Test Plan, PN20001411.

4.2 Quality Conformance Inspections

The recorder equipment module shall be exposed to verification conditions which represent those environments encountered throughout the ground phase and flight mission. The environmental conditions and levels of exposure are defined in the Verification Specification for the Earth Observing System (VRD-110), PS20005404, Section 4. There are four methods which may be used individually or in combination to verify each requirement in Section 3. These methods,defined as inspection (I), analysis (A), demonstration(D), and test (T) are defined in the Verification Specification for the Earth Observing System(VRD-110), PS20005404, Section 4.

4.2.1 Method of Verification

4.2.1.1 Inspection

Inspection may be used to verify design and construction requirements, drawing compliance, or specific physical dimensions of the equipment module. Inspection is a method of verification of physical characteristics that determines compliance without the use special laboratory equipment,

procedures, test support items, or services. Inspection uses standard methods such as visual gauges, etc., to verify compliance with requirements. Inspection also includes the review of design documents, material lists, code, plans, etc., to verify that requirements have been met.

4.2.1.2 Analysis

Analytical techniques may be used, in lieu of testing, to verify compliance to specified requirements, either alone or in combination with test. The selected techniques may include, typically, system engineering analysis, statistics, qualitative analysis, analog modeling, and computer simulation.

4.2.1.3 Demonstration

Demonstration is a qualitative method of verification that evaluates the properties of the subject equipment by observation. Demonstration is used with or without special test equipment or instrumentation to verify required characteristics such as operational functioning human engineering features, service and access features, transportability, and displayed data.

4.2.1.4 Test

Test is a quantitative method of verification wherein performance requirements are verified by measurement during and after the controlled application of functional and environmental stimuli. These measurements may require the use of laboratory equipment, recorded data, procedures, test support items, or services.

4.2.1.5 Classification of Characteristics

Classification of characteristics as critical, major or minor, shall be as defined in MIL-STD-109.

4.2.1.6 Test Equipment

[1] Existing test equipment shall be used wherever practical.

[2] Where new test equipment is required to test units which are physically or functionally identical or similar, the equipment shall be designed to perform its task(s) on each element of that group, where practical.

4.2.1.6.1 Test Equipment Safety Features

[1] Test equipment shall incorporate any safety interlocks or other safety features necessary to reduce the introduction of safety hazards by the test equipment.

[2] Any safety feature included in any Spacecraft test equipment shall give a visual, auditory, or electronic indication of activation when it is activated.

4.2.1.6.2 Test Equipment Verification

Unless otherwise specified herein, test equipment used to measure recorder performance characteristics shall be capable of demonstrating that

a. it will not impose environments on the tested item(s) beyond the levels called for in the Verification Specification, PS20005404, and
b. it is capable of imposing the test levels called for in the Verification Specification, PS20005404.
c. It is capable of meeting all the requirements imposed on it by the Ground Support Equipment Requirements Document, 20001430 (GSERD).

4.2.1.6.3 Test Equipment Calibration

[1] EM test equipment shall be calibrated in accordance with the Performance Assurance Implementation Plan, 20005397.

(This page intentionally left blank.)

5 PREPARATION FOR DELIVERY

5.1 General

Interior and exterior shipping containers shall be marked in accordance with the Identification and Marking requirements of the General Interface Specification, IS20008501.

(This page intentionally left blank.)

6 NOTES

6.1 Definitions

None

6.2 Abbreviations and Acronyms

BDU	Bus Data Unit
C	Celsius (degrees)
C&DH	Command and Data Handling
CEI	Contract End Item
COMM	Communications
dc	Direct Current
DAS	Direct Access System
DCU	Data Control Unit
DMU	Data Memory Unit
EAS	Electrical Accomodations Subsystem
EM	Equipment Module
EMC	Electromagnetic Compatibility
EMI	Electromagnetic Interference
EOL	End of Life
EOS	Earth Observing System
FDB	Fuse Distribution Box
GFE	Government Furnished Equipment
GSE	Ground Support Equipment
HGA	High Gain Antenna
I&T	Integration and Test
ICD	Interface Control Document
IMC	Intermodule Connector
LV	Launch Vehicle
MS	Margin of Safety
NA	Not Applicable
NASA	National Aeronautics and Space Administration

PAML	Program Approved Materials List
PAPL	Program Approved Parts List
PDU	Power Distribution Unit
REM	Recorder Equipment Module
SCC	Spacecraft Controls Computer
SSR	Solid State Recorder
TBD	To Be Determined
TBR	To Be Reviewed
TCS	Thermal Control System
Vdc	Volts Direct Current

6.3 Exceptions to the GIS and GIIS

None. (Nameplates and Product Marking requirements in GIS are supplemented by paragraph 3.3.4 herein.)

6.4 Requirements Traceability Matrix

Requirements in Section 3 of this specification were derived from the source document, PS20005396, Contract End Item (CEI) Specification. Compliance to these requirements are shown in the Requirements Traceability Matrix, Attachment B, provided under separate cover.

APPENDIX I

10 ELECTRICAL CONNECTOR CONTACT ASSIGNMENTS

The recorder EM connectors on the electrical connector bracket shall be configured as shown in Figure 6.

Note: The Contact Number assignments are **(TBR–1)**.

Note: The Circuit Categories are **(TBD–5)**

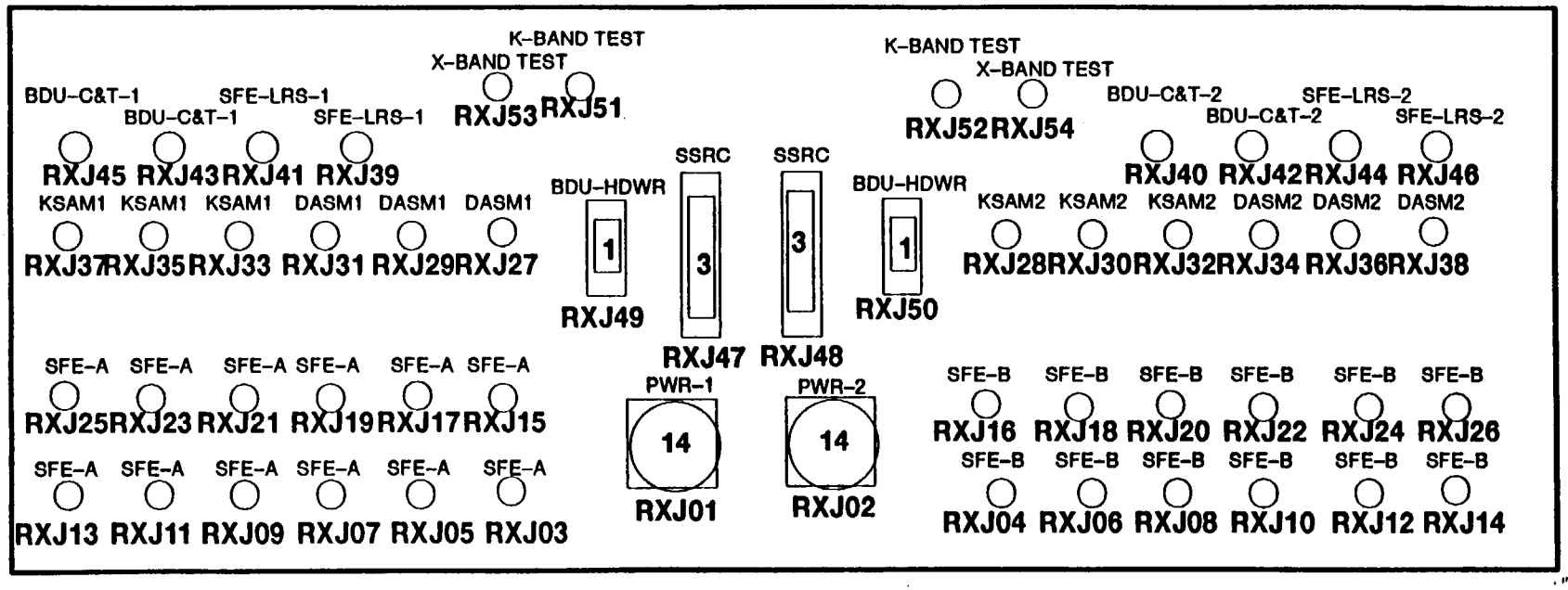

Figure 6. SSR/EM Interface Bracket

Connector Designation: RXJ01 Part Number: 20034844PJ1D18N		Connector Function: Power input Connector Type: 18 pin, circular	
Contact Number	**Function Name**	**Circuit Category**	**Destination/Source**
2.	RFDBA1 120V POS–1		RFDB/Prm pwr bus
3.	RFDBA1 120V RTN–1		Prm pwr bus/RFDB
4.	RFDBA1 120V POS–2		RFDB/Prm pwr bus
5.	RFDBA1 120V RTN–2		Prm pwr bus/RFDB
6.	REM FAULT GND A1		RFDB/SRP
14.	RFDBA2 120V POS–1		RFDB/Prm pwr bus
15.	RFDBA2 120V RTN–1		Prm pwr bus/RFDB
16.	RFDBA2 120V POS–2		RFDB/Prm pwr bus
17.	RFDBA2 120V RTN–2		Prm pwr bus/RFDB
18.	REM FAULT GND A2		RFDB/SRP

Connector Designation: RXJ02 Part Number: 20034844PJ1D18A		Connector Function: Power input Connector Type: 18 pin, circular	
Contact Number	**Function Name**	**Circuit Category**	**Destination/Source**
2.	RFDBB1 120V POS–1		RFDB/Prm pwr bus
3.	RFDBB1 120V RTN–1		Prm pwr bus/RFDB
4.	RFDBB1 120V POS–2		RFDB/Prm pwr bus
5.	RFDBB1 120V RTN–2		Prm pwr bus/RFDB
6.	REM FAULT GND B1		RFDB/SRP
14.	RFDBB2 120V POS–1		RFDB/Prm pwr bus
15.	RFDBB2 120V RTN–1		Prm pwr bus/RFDB
16.	RFDBB2 120V POS–2		RFDB/Prm pwr bus
17.	RFDBB2 120V RTN–2		Prm pwr bus/RFDB
18.	REM FAULT GND B2		RFDB/SRP

Connector Designation: RXJ45 Part Number: 20040889P1		Connector Function: C&T bus interface Connector Type: TRIAX (1553)	
Contact Number	**Function Name**	**Circuit Category**	**Destination/Source**
n/a	RC&T BUS A STUB 1		RBDU/CTIU

Connector Designation: RXJ43 Part Number:		Connector Function: C&T bus interface Connector Type: TRIAX (1553)	
Contact Number	**Function Name**	**Circuit Category**	**Destination/Source**
n/a	RC&T BUS A STUB 2		RBDU/CTIU

Connector Designation: RXJ49 Part Number: 20042415P1009PA		Connector Function: Cmd interface Connector Type: Rectangular (9 pin)	
Contact Number	**Function Name**	**Circuit Category**	**Destination/Source**
1.	CTIU1 RBDU A ON CMD		RBDU/CTIU
2.	CTIU1 RBDU A ON CMD RTN		CTIU/RBDU
3.	CTIU1 RBDU A OFF CMD		RBDU/CTIU
4.	CTIU1 RBDU A OFF CMD RTN		CTIU/RBDU
5.	CTIU2 RBDU A ON CMD		RBDU/CTIU
6.	CTIU2 RBDU A ON CMD RTN		CTIU/RBDU
7.	CTIU2 RBDU A OFF CMD		RBDU/CTIU
8.	CTIU2 RBDU A OFF CMD RTN		CTIU/RBDU

Connector Designation: RXJ40 Part Number: 20040889P1		Connector Function: C&T bus interface Connector Type: TRIAX (1553)	
Contact Number	**Function Name**	**Circuit Category**	**Destination/Source**
n/a	RC&T BUS B STUB 1		RBDU/CTIU

Connector Designation: RXJ42 Part Number: 20040889P1		Connector Function: C&T bus interface Connector Type: TRIAX (1553)	
Contact Number	**Function Name**	**Circuit Category**	**Destination/Source**
n/a	RC&T BUS B STUB 2		RBDU/CTIU

Connector Designation: RXJ50 Part Number: 20042415P1009PA		Connector Function: Cmd interface Connector Type: Rectangular (9 pin)	
Contact Number	**Function Name**	**Circuit Category**	**Destination/Source**
1.	CTIU1 RBDU B ON CMD		RBDU/CTIU
2.	CTIU1 RBDU B ON CMD RTN		CTIU/RBDU
3.	CTIU1 RBDU B OFF CMD		RBDU/CTIU
4.	CTIU1 RBDU B OFF CMD RTN		CTIU/RBDU
5.	CTIU2 RBDU B ON CMD		RBDU/CTIU
6.	CTIU2 RBDU B ON CMD RTN		CTIU/RBDU
7.	CTIU2 RBDU B OFF CMD		RBDU/CTIU
8.	CTIU2 RBDU B OFF CMD RTN		CTIU/RBDU

Connector Designation: RXJ37 Part Number: G2R52		Connector Function: K–band signal i/f Connector Type: SMA Jack	
Contact Number	**Function Name**	**Circuit Category**	**Destination/Source**
n/a	KSAM 1 I/F SIGNAL OUT		HGA/KSAM1

Connector Designation: RXJ35 Part Number: 20040889P1		Connector Function: K–band signal i/f Connector Type: Triax	
Contact Number	**Function Name**	**Circuit Category**	**Destination/Source**
n/a	KSAM 1 LO SIGNAL OUT		HGA/KSAM1

Connector Designation: RXJ33 Part Number: G2R52		Connector Function: K–band signal i/f Connector Type: SMA Jack	
Contact Number	**Function Name**	**Circuit Category**	**Destination/Source**
n/a	KSAM 1 MO 1 SIGNAL		KSAM1/MO

Connector Designation: RTXJ01 Part Number: G2R52		Connector Function: K–band signal i/f Connector Type: SMA Jack	
Contact Number	**Function Name**	**Circuit Category**	**Destination/Source**
n/a	KSAM 1 I/F TEST SIGNAL		GSE/KSAM1

Connector Designation: RXJ28 Part Number: G2R52		Connector Function: K–band signal i/f Connector Type: SMA Jack	
Contact Number	Function Name	Circuit Category	Destination/Source
n/a	KSAM 2 I/F SIGNAL OUT		HGA/KSAM2

Connector Designation: RXJ30 Part Number: 20040889P1		Connector Function: K–band signal i/f Connector Type: Triax	
Contact Number	Function Name	Circuit Category	Destination/Source
n/a	KSAM 2 LO SIGNAL OUT		HGA/KSAM2

Connector Designation: RXJ32 Part Number: G2R52		Connector Function: K–band signal i/f Connector Type: SMA Jack	
Contact Number	Function Name	Circuit Category	Destination/Source
n/a	KSAM 2 MO 2 SIGNAL		KSAM2/HGA

Connector Designation: RTXJ02 Part Number: G2R52		Connector Function: K–band signal i/f Connector Type: SMA Jack	
Contact Number	Function Name	Circuit Category	Destination/Source
n/a	KSAM 2 I/F TEST SIGNAL		GSE/KSAM2

Connector Designation: RXJ31 Part Number: G2R52		Connector Function: X–band signal i/f Connector Type: SMA Jack	
Contact Number	Function Name	Circuit Category	Destination/Source
n/a	DASM 1 I/F SIGNAL OUT		DAS PANEL/DASM1

Connector Designation: RXJ29 Part Number: 20040889P1		Connector Function: X–band signal i/f Connector Type: Triax	
Contact Number	Function Name	Circuit Category	Destination/Source
n/a	DASM 1 LO SIGNAL OUT		DAS PANEL/DASM1

Connector Designation: RXJ27 Part Number: G2R52		Connector Function: X-band signal i/f Connector Type: SMA Jack	
Contact Number	Function Name	Circuit Category	Destination/Source
n/a	DASM 1 MO 1 SIGNAL		DASM1/MO

Connector Designation: RTXJ03 Part Number: G2R52		Connector Function: X-band signal i/f Connector Type: SMA Jack	
Contact Number	Function Name	Circuit Category	Destination/Source
n/a	DASM 1 I/F TEST SIGNAL		GSE/DASM1

Connector Designation: RXJ34 Part Number: G2R52		Connector Function: X-band signal i/f Connector Type: SMA Jack	
Contact Number	Function Name	Circuit Category	Destination/Source
n/a	DASM 2 I/F SIGNAL OUT		DAS PANEL/DASM2

Connector Designation: RXJ36 Part Number: 20040889P1		Connector Function: X-band signal i/f Connector Type: Triax	
Contact Number	Function Name	Circuit Category	Destination/Source
n/a	DASM 2 LO SIGNAL OUT		DAS PANEL/DASM2

Connector Designation: RXJ38 Part Number: G2R52		Connector Function: X-band signal i/f Connector Type: SMA Jack	
Contact Number	Function Name	Circuit Category	Destination/Source
n/a	DASM 2 MO 2 SIGNAL		DASM2/MO

Connector Designation: RTXJ04 Part Number: G2R52		Connector Function: X-band signal i/f Connector Type: SMA Jack	
Contact Number	Function Name	Circuit Category	Destination/Source
n/a	DASM 2 I/F TEST SIGNAL		GSE/DASM2

Connector Designation: RXJ25 Part Number: G2R52		Connector Function: high rate data link Connector Type: SMA Jack	
Contact Number	Function Name	Circuit Category	Destination/Source
n/a	HRDL1A VNIR 1 HI		SFE/VNIR

Connector Designation: RXJ23 Part Number: G2R52		Connector Function: high rate data link Connector Type: SMA Jack	
Contact Number	Function Name	Circuit Category	Destination/Source
n/a	HRDL1A VNIR 1 LO		SFE/VNIR

Connector Designation: RXJ21 Part Number: G2R52		Connector Function: high rate data link Connector Type: SMA Jack	
Contact Number	Function Name	Circuit Category	Destination/Source
n/a	HRDL2A SWIR HI		SFE/SWIR

Connector Designation: RXJ19 Part Number: G2R52		Connector Function: high rate data link Connector Type: SMA Jack	
Contact Number	Function Name	Circuit Category	Destination/Source
n/a	HRDL2A SWIR LO		SFE/SWIR

Connector Designation: RXJ17 Part Number: G2R52		Connector Function: high rate data link Connector Type: SMA Jack	
Contact Number	Function Name	Circuit Category	Destination/Source
n/a	HRDL3A TIR HI		SFE/TIR

Connector Designation: RXJ15 Part Number: G2R52		Connector Function: high rate data link Connector Type: SMA Jack	
Contact Number	Function Name	Circuit Category	Destination/Source
n/a	HRDL3A TIR LO		SFE/TIR

Connector Designation: RXJ11 Part Number: G2R52		Connector Function: high rate data link Connector Type: SMA Jack	
Contact Number	Function Name	Circuit Category	Destination/Source
n/a	HRDL4A VNIR 2 LO		SFE/VNIR

Connector Designation: RXJ13 Part Number: G2R52		Connector Function: high rate data link Connector Type: SMA Jack	
Contact Number	Function Name	Circuit Category	Destination/Source
n/a	HRDL4A VNIR 2 HI		SFE/VNIR

Connector Designation: RXJ09 Part Number: G2R52		Connector Function: high rate data link Connector Type: SMA Jack	
Contact Number	Function Name	Circuit Category	Destination/Source
n/a	HRDL5A MODIS HI		SFE/MODIS

Connector Designation: RXJ07 Part Number: G2R52		Connector Function: high rate data link Connector Type: SMA Jack	
Contact Number	Function Name	Circuit Category	Destination/Source
n/a	HRDL5A MODIS LO		SFE/MODIS

Connector Designation: RXJ05 Part Number: G2R52		Connector Function: high rate data link Connector Type: SMA Jack	
Contact Number	Function Name	Circuit Category	Destination/Source
n/a	HRDL5A MISR HI		SFE/MISR

Connector Designation: RXJ03 Part Number: G2R52		Connector Function: high rate data link Connector Type: SMA Jack	
Contact Number	Function Name	Circuit Category	Destination/Source
n/a	HRDL5A MISR LO		SFE/MISR

Connector Designation: RXJ16 Part Number: G2R52		Connector Function: high rate data link Connector Type: SMA Jack	
Contact Number	Function Name	Circuit Category	Destination/Source
n/a	HRDL1B VNIR 1 HI		SFE/VNIR

Connector Designation: RXJ18 Part Number: G2R52		Connector Function: high rate data link Connector Type: SMA Jack	
Contact Number	Function Name	Circuit Category	Destination/Source
n/a	HRDL1B VNIR 1 LO		SFE/VNIR

Connector Designation: RXJ20 Part Number: G2R52		Connector Function: high rate data link Connector Type: SMA Jack	
Contact Number	Function Name	Circuit Category	Destination/Source
n/a	HRDL2B SWIR HI		SFE/SWIR

Connector Designation: RXJ22 Part Number: G2R52		Connector Function: high rate data link Connector Type: SMA Jack	
Contact Number	Function Name	Circuit Category	Destination/Source
n/a	HRDL2B SWIR LO		SFE/SWIR

Connector Designation: RXJ24 Part Number: G2R52		Connector Function: high rate data link Connector Type: SMA Jack	
Contact Number	Function Name	Circuit Category	Destination/Source
n/a	HRDL3B TIR HI		SFE/TIR

Connector Designation: RXJ26 Part Number: G2R52		Connector Function: high rate data link Connector Type: SMA Jack	
Contact Number	Function Name	Circuit Category	Destination/Source
n/a	HRDL3B TIR LO		SFE/TIR

Connector Designation: RXJ06 Part Number: G2R52		Connector Function: high rate data link Connector Type: SMA Jack	
Contact Number	Function Name	Circuit Category	Destination/Source
n/a	HRDL4B VNIR 2 LO		SFE/VNIR

Connector Designation: RXJ04 Part Number: G2R52		Connector Function: high rate data link Connector Type: SMA Jack	
Contact Number	Function Name	Circuit Category	Destination/Source
n/a	HRDL4B VNIR 2 HI		SFE/VNIR

Connector Designation: RXJ08 Part Number: G2R52		Connector Function: high rate data link Connector Type: SMA Jack	
Contact Number	Function Name	Circuit Category	Destination/Source
n/a	HRDL5B MODIS HI		SFE/MODIS

Connector Designation: RXJ10 Part Number: G2R52		Connector Function: high rate data link Connector Type: SMA Jack	
Contact Number	Function Name	Circuit Category	Destination/Source
n/a	HRDL5B MODIS LO		SFE/MODIS

Connector Designation: RXJ12 Part Number: G2R52		Connector Function: high rate data link Connector Type: SMA Jack	
Contact Number	Function Name	Circuit Category	Destination/Source
n/a	HRDL5B MISR HI		SFE/MISR

Connector Designation: RXJ14 Part Number: G2R52		Connector Function: high rate data link Connector Type: SMA Jack	
Contact Number	Function Name	Circuit Category	Destination/Source
n/a	HRDL5B MISR LO		SFE/MISR

Connector Designation: RXJ41 Part Number: 20040889P1		Connector Function: low rate data bus link Connector Type: Twinax	
Contact Number	**Function Name**	**Circuit Category**	**Destination/Source**
n/a	SFE A LR DATA BUS A		SFE/Low rate data bus

Connector Designation: RXJ44 Part Number: 20040889P1		Connector Function: low rate data bus link Connector Type: Twinax	
Contact Number	**Function Name**	**Circuit Category**	**Destination/Source**
n/a	SFE A LR DATA BUS B		SFE/Low rate data bus

Connector Designation: RXJ39 Part Number: 20040889P1		Connector Function: low rate data bus link Connector Type: Twinax	
Contact Number	**Function Name**	**Circuit Category**	**Destination/Source**
n/a	SFE B LR DATA BUS A		SFE/Low rate data bus

Connector Designation: RXJ46 Part Number: 20040889P1		Connector Function: low rate data bus link Connector Type: Twinax	
Contact Number	**Function Name**	**Circuit Category**	**Destination/Source**
n/a	SFE B LR DATA BUS B		SFE/Low rate data bus

Connector Designation: RXJ47 Part Number: 20042415P1025PA		Connector Function: low rate data bus link Connector Type: 25 Pin Rectangular	
Contact Number	**Function Name**	**Circuit Category**	**Destination/Source**
1.	CTIU1 DCU1 DATA REC HI		DCU1/CTIU1
2.	CTIU1 DCU1 DATA REC LO		DCU1/CTIU1
3.	CTIU1 DCU1 DATA PLAY HI		CTIU1/DCU1
4.	CTIU1 DCU1 DATA PLAY LO		CTIU1/DCU1
5.	CTIU1 DCU1 REC CLK HI		DCU1/CTIU1
6.	CTIU1 DCU1 REC CLK LO		DCU1/CTIU1
7.	CTIU1 DCU1 1X PLAY CLK HI		CTIU1/DCU1
8.	CTIU1 DCU1 1X PLAY CLK LO		CTIU1/DCU1
9.	CTIU1 DCU1 2X PLAY CLK HI		CTIU1/DCU1

Connector Designation: RXJ47 Part Number: 20042415P1025PA		Connector Function: low rate data bus link Connector Type: 25 Pin Rectangular	
Contact Number	**Function Name**	**Circuit Category**	**Destination/Source**
10.	CTIU1 DCU1 2X PLAY CLK LO		CTIU1/DCU1
11.	CTIU1 DCU1 SIG GRD		CTIU1/DCU1
12.	CTIU1 DCU2 DATA REC HI		DCU2/CTIU1
13.	CTIU1 DCU2 DATA REC LO		DCU2/CTIU1
14.	CTIU1 DCU2 DATA PLAY HI		CTIU1/DCU2
15.	CTIU1 DCU2 DATA PLAY LO		CTIU1/DCU2
16.	CTIU1 DCU2 REC CLK HI		DCU2/CTIU1
17.	CTIU1 DCU2 REC CLK LO		DCU2/CTIU1
18.	CTIU1 DCU2 1X PLAY CLK HI		CTIU1/DCU2
19.	CTIU1 DCU2 1X PLAY CLK LO		CTIU1/DCU2
20.	CTIU1 DCU2 2X PLAY CLK HI		CTIU1/DCU2
21.	CTIU1 DCU2 2X PLAY CLK LO		CTIU1/DCU2
22.	CTIU1 DCU2 SIG GRD		CTIU1/DCU2

Connector Designation: RXJ48 Part Number: 20042415P1025PA		Connector Function: low rate data bus link Connector Type: 25 Pin Rectangular	
Contact Number	**Function Name**	**Circuit Category**	**Destination/Source**
1.	CTIU2 DCU1 DATA REC HI		DCU1/CTIU2
2.	CTIU2 DCU1 DATA REC LO		DCU1/CTIU2
3.	CTIU2 DCU1 DATA PLAY HI		CTIU2/DCU1
4.	CTIU2 DCU1 DATA PLAY LO		CTIU2/DCU1
5.	CTIU2 DCU1 REC CLK HI		DCU1/CTIU2
6.	CTIU2 DCU1 REC CLK LO		DCU1/CTIU2
7.	CTIU2 DCU1 1X PLAY CLK HI		CTIU2/DCU1
8.	CTIU2 DCU1 1X PLAY CLK LO		CTIU2/DCU1
9.	CTIU2 DCU1 2X PLAY CLK HI		CTIU2/DCU1
10.	CTIU2 DCU1 2X PLAY CLK LO		CTIU2/DCU1
11.	CTIU2 DCU1 SIG GRD		CTIU2/DCU1
12.	CTIU2 DCU2 DATA REC HI		DCU2/CTIU2
13.	CTIU2 DCU2 DATA REC LO		DCU2/CTIU2

Connector Designation: RXJ48 Part Number: 20042415P1025PA		Connector Function: low rate data bus link Connector Type: 25 Pin Rectangular	
Contact Number	**Function Name**	**Circuit Category**	**Destination/Source**
14.	CTIU2 DCU2 DATA PLAY HI		CTIU2/DCU2
15.	CTIU2 DCU2 DATA PLAY LO		CTIU2/DCU2
16.	CTIU2 DCU2 REC CLK HI		DCU2/CTIU2
17.	CTIU2 DCU2 REC CLK LO		DCU2/CTIU2
18.	CTIU2 DCU2 1X PLAY CLK HI		CTIU2/DCU2
19.	CTIU2 DCU2 1X PLAY CLK LO		CTIU2/DCU2
20.	CTIU2 DCU2 2X PLAY CLK HI		CTIU2/DCU2
21.	CTIU2 DCU2 2X PLAY CLK LO		CTIU2/DCU2
22.	CTIU2 DCU2 SIG GRD		CTIU2/DCU2

PS20001408
CAGE No. 49671
05 August 1993

Performance Specification
Power Equipment Module and Battery Panels for EOS AM Spacecraft
(SP–801)

Prepared under:
Contract NAS5–32500
NASA Goddard Space Flight Center
Greenbelt, Maryland 20771

Prepared by:
Martin Marietta Corporation
Astro Space
P.O. Box 800
Princeton, New Jersey 08543–0800

DCC080593

(This page intentionally left blank.)

REVISION LOG

This log identifies those portions of this document which have been revised since the original issue. Revised portions of each page, for the current revision only, are identified by marginal striping.

Revision	Paragraph Number(s) Affected	Rev. Date	Approval
Initial Issue		08/05/93	CM/GSR

(This page intentionally left blank.)

TABLE OF CONTENTS

SECTION / PARAGRAPH	TITLE	PAGE
1	SCOPE	1
1.1	Identification	1
2	APPLICABLE DOCUMENTS	3
2.1	Government Documents	3
2.1.1	Military	3
2.1.2	NASA	3
2.2	Non–Government Documents	3
2.2.1	Specifications	4
2.2.2	STANDARDS	5
2.2.3	DRAWINGS	5
2.2.4	Other Publications:	6
3	REQUIREMENTS	7
3.1	Power EM Description	7
3.1.1	Power EM Functional Description	7
3.1.1.1	Functional Definition	8
3.1.2	Interface Definition	8
3.1.2.2	Command and Telemetry Interfaces	15
3.1.2.3	Mechanical Interfaces	17
3.1.2.4	Thermal Interfaces	17
3.1.3	Major Component List	18
3.2	Characteristics	18
3.2.1	Performance	18
3.2.1.1	Power EM EPS Primary Functions	19
3.2.1.2	Power Management and Distribution Characteristics	19
3.2.1.3	Battery Power Conditioner (BPC) Characteristics	19
3.2.1.4	Power EM and Hex Bay Battery Panel Characteristics	19
3.2.1.5	Power EM and Battery Panel Thermal Control Subsystem (TCS) Functions	20

TABLE OF CONTENTS (Continued)

SECTION / PARAGRAPH	TITLE	PAGE
3.2.1.6	Power EM Mechanical Subsystem Functions	21
3.2.1.7	Power Module Electrical Accommodation Subsystem (EAS) Functions	22
3.2.1.8	Guidance, Navigation and Control	24
3.2.1.9	Power EM Monitoring	24
3.2.2	Physical Characteristics	24
3.2.2.1	Mass	24
3.2.2.2	DC Power Consumption	24
3.2.2.3	Power Dissipation	24
3.2.2.4	Dimension	25
3.2.2.5	Transport and Storage	25
3.2.2.6	Integration and Test	25
3.2.2.7	Layout	26
3.2.2.8	Configuration	28
3.2.2.9	Natural Frequency	28
3.2.3	Reliability	28
3.2.4	Durability	28
3.2.5	Maintainability	28
3.2.6	Environmental Conditions	28
3.2.6.1	General	28
3.2.6.2	Sine Vibration	29
3.2.7	Transportability	29
3.3	Design and Construction	29
3.3.1	Materials, Processes, and Parts	29
3.3.2	Electric Fields	29
3.3.3	Magnetic Fields	30
3.3.4	Nameplates and Product Marking	30
3.3.5	Workmanship	30
3.3.6	Safety	31
3.3.7	Human Performance/Human Engineering	31
3.4	Documentation	31

TABLE OF CONTENTS (Continued)

SECTION / PARAGRAPH	TITLE	PAGE
3.4.1	Specifications	31
3.4.2	Drawings	31
3.4.3	Test Plans and Procedures	31
3.5	Precedence	31
4	QUALITY ASSURANCE PROVISIONS	33
4.1	General	33
4.1.1	Responsibility for Tests	33
4.1.2	Special Tests and Examinations	33
4.1.3	Reliability Test	33
4.1.4	Engineering Evaluation and Test	33
4.1.5	Protoflight and Flight Acceptance Test	33
4.1.6	Installation Test and Checkout	34
4.1.6.1	Electrical Integration and Checkout (EIC)	35
4.1.6.2	Functional Test (FT)	35
4.1.6.3	Comprehensive Performance Test (CPT)	35
4.1.6.4	Interface Verification Test (IVT)	35
4.1.7	Formal Test Verification	35
4.2	Quality Conformance Inspections	36
4.2.1	Method of Verification	36
4.2.1.1	Inspection	36
4.2.1.2	Analysis	36
4.2.1.3	Demonstration	36
4.2.1.4	Test	36
4.2.1.5	Classification of Characteristics	36
4.2.1.6	Test Equipment	36
5	PREPARATION FOR DELIVERY	39
5.1	General	39
6	NOTES	41

TABLE OF CONTENTS (Continued)

SECTION / PARAGRAPH	TITLE	PAGE
6.1	Definitions	41
6.2	Abbreviations and Acronyms	41
6.3	Exceptions to the GIS and GIIS.	42
6.4	Requirements Traceability Matrix	42

APPENDIX I

10	POWER EM TEST POINTS	43

APPENDIX II

20	ELECTRICAL CONNECTOR CONTACT ASSIGNMENTS	45

LIST OF FIGURES

FIGURE	TITLE	PAGE
1	Power Equipment Module Isometric Diagram	9
2	Power Equipment Module Battery Panel Isometric Diagram	10
3	Hex Bay Battery Panel Isometric Diagram	11
4	Integrated Battery Panel Isometric Diagram	12
5	PMAD (–Z) Panel	13
6	Power EM and Hex Bay Battery Panel Functional Block Diagram	14
7	External Functional Interfaces	16
8	Power EM Kinematic Mount Distribution	23
9	Power EM Integration and Test Flow	34
10	Power EM S/C Interface Connector Panel Layout	46
11	Battery/Pre–Enable Panel	47

TBD LOG

ITEM	SECTION	PAGE	SUBJECT	RESP.	DUE
TBD–1	Table II	18	Mechanical Component Part Number	P. Walker	12/93
TBD–2	Table II	18	Mechanical Component Part Number	P. Walker	12/93
TBD–3	Table II	18	Mechanical Component Part Number	P. Walker	12/93

LIST OF TABLES

TABLE	TITLE	PAGE
I	Power Equipment Module Subsystem Functions	7
II	Power Equipment Module Components	18
III	Power Equipment Module Component Allocations	26
IV	Power Equipment Module Thermal Dissipation	27

TBR LOG

ITEM	SECTION	PAGE	SUBJECT	RESP.	DUE
TBR–1	3.1.1.	8	Number of HCEs	D. Chalmers	12/93
TBR–2	Table II	18	Number of HCEs	D. Chalmers	12/93
TBR–3	3.2.1.5.1.2	20	Number of HCEs	D. Chalmers	12/93
TBR–4	3.2.1.5.2.2.4	20	Number of HCEs	D. Chalmers	12/93
TBR–5	3.2.1.5.3.2	21	Number of HCEs	D. Chalmers	12/93
TBR–6	3.2.2.4.1	25	Length Dimension	P. Walker	12/93
TBR–7	3.2.2.4.1	25	Width Dimension	P. Walker	12/93
TBR–8	3.2.2.4.1	25	Height Dimension	P. Walker	12/93

TBS LOG

ITEM	SECTION	PAGE	SUBJECT	RESP.	DUE
TBS–1	Appx. II	45	Electrical Connector Contact Assignments	S. Holaday	12/93

(This page intentionally left blank.)

1 SCOPE

1.1 Identification

This specification establishes the performance, design, development, and test requirements for the Power Equipment Module (EM) and battery panels. The Power EM and the two battery panels will meet all the applicable requirements of the Contract End Item (CEI) Specification for the EOS–AM Spacecraft, PS20005396 (SEP–101), throughout its design life. The principal requirement of modularity to facilitate Spacecraft construction, maintenance, and serviceability is satisfied by this module design. The Power EM and battery panels will be designed to facilitate producibility, integration, and accessibility to the internal components while minimizing weight. Requirements and performance characteristics defined in this specification are intended to support the buildup and verification of the EM by the EOS–AM Integration and Test (I&T) organization. The Power EM and battery panels will be modular to allow on–ground removal and replacement onto the Spacecraft core.

(This page intentionally left blank.)

2 APPLICABLE DOCUMENTS

All and only those documents referenced in Sections 3, 4, and 5 and appendices of this specification are listed in Section 2 of the specification. References are confined to documents currently available at the time of issuance of the current revision of this specification..

2.1 Government Documents

The following documents of the exact issue shown, form a part of this specification to the extent specified herein. In the event of conflict between the documents referenced below and the contents of this specification, the contents of this specification shall take precedence, except as defined in Section 3.5 herein.

2.1.1 Military

WSMCR 127-1	Western Space and Missile Center Range Safety Requirements
MIL–STD–1472D 20 March 1991	Human Engineering Design Criteria for Military Systems, Equipment and Facilities
MIL–STD–490A 04 June 1985	Specification Practices
MIL–STD–889B 07 July 1976	Dissimilar Materials
MIL–STD–1553B 08 September 1986	Digital Time Division Command/Response Multiplex Data Bus
MIL–HDBK–5	Military Handbook, Metallic Materials and Elements for Aerospace Vehicle Structures
MIL–HDBK–17	Military Handbook, Plastics for Aerospace Vehicles

2.1.2 NASA

MSFC–SPEC–522	Design Criteria for Controlling Stress Corrosion
NHB 5300.4 (3A–1,G–K)	Workmanship Standards

2.2 Non–Government Documents

Unless otherwise specified, the following documents of the latest issue form a part of this specification to the extent specified herein. In the event of a conflict between the documents referenced herein and the contents of this specification, the contents of this specification shall be considered a superseding requirement, except for the higher tier documents.

2.2.1 Specifications

20008536	EOS–AM Spacecraft Observatory Specification Tree
IS20008501	General Interface Specification for the Earth Observing System, ICD–101
PN20001408	Power EM Test Plan
PN20001412	EOS–AM Spacecraft Contamination Control Plan (SEP–107)
PN20005404	Spacecraft Verification Plan, VRD–100
PN20005869	Electromagnetic Compatibility (EMC) Control Plan, SEP–106
PN20005397	EOS Performance Assurance Implementation Plan (PAIP) (PA–100)
PN20008540	Logistics Plan
PN20008648	Program Approved Parts List (PAPL)
PN20008650	Program Approved Materials and Processes List
PN20008664	Comprehensive Test Plan
PS20005396	EOS–AM Spacecraft Contract End Item Specification, SEP–101
PS20005404	Verification Specification for the Earth Observing System, VRD–110
PS20005397	Product Assurance Implementation Plan (PAIP)
PS20004749	Electrical Power Subsystem (EPS) Performance Specification
PS20008746	Battery Panel Performance Specification (Hex Bay)
PS20008882	Battery Panel Performance Specification (Power EM)
PS20008596	Battery Power Conditioner (BPC) Performance Specification
PS20008599	Power Distribution Unit (PDU) Performance Specification
PS20008694	Fuse and Distribution Box (FDB) Performance Specification

PS20008597	Electrical Power Conditioner (EPC) Performance Specification
PS20008568	Bus Data Unit (BDU) Performance Specification
PS20008550	Heater Control Electronics (HCE) Performance Specification
PS20003827	Earth Sensor Electronics Performance Specification
PS20003828	Fine Sun Sensor Electronics Performance Specification
PS20003829	Torque Rod Performance Specification
PS20003828	Fine Sun Sensor Head Performance Specification
PS20008549	Thermal Control Subsystem (TCS) Performance Specification
PS20008636	Electrical Accommodations Subsystem (EAS) Performance Specification
PS20001415	Structures and Mechanisms Subsystem (SMS) Performance Specification
PS20008567	Command and Data Handling Performance Specification
PS20008569	Command and Telemetry Interface Unit (CTIU) Performance Specification
PS20004937	Guidance, Navigation, and Control Performance Specification
Source:	Martin Marietta Astro Space P. O. Box 800 Princeton, NJ 08543–0800

2.2.2 STANDARDS

S32534E	Identification Marking
Source:	Martin Marietta Astro Space P. O. Box 800 Princeton, NJ 08543–0800

2.2.3 DRAWINGS

20008536	EOS–AM Spacecraft Observatory Specification Tree

20001408	Power Equipment Module Assembly Drawing
20001430	Ground Support Equipment Requirements Document (SEP–104)
ICD20001408	Interface Control Drawing, Power Equipment Module
20008746	Hex Bay Battery Panel Assembly Drawing
ICD20008746	Interface control Drawing, Hex Bay Battery Panel
Source:	Martin Marietta Astro Space P. O. Box 800 Princeton, NJ 08543–0800

2.2.4 Other Publications:

20004280	Subcontractor Performance Assurance Requirements
20008540	Logistics Plan
20008682GX	Power Equipment Module Power Harness
20038713GX	Power Equipment Module C&DH Harness
ICD20008568	Interface Control Document, Bus Data Unit
ICD20008569	Interface Control Document Command and Telemetry Interface Unit
Source:	Martin Marietta Astro Space P. O. Box 800 Princeton, NJ 08543–0800

3 REQUIREMENTS

The Power EM shall meet all performance requirements specified herein under all combinations of environmental conditions and after exposure to the launch environment described herein. All requirements are end–of–life (EOL) specifications unless stated otherwise.

3.1 Power EM Description

The Power EM contains elements of several Spacecraft subsystems. These subsystems and their major functions performed within the EM are described in Table I.

Table I. Power EM Subsystem Functions

Subsystem and Performance Specification	Major EM Subsystem Functions
Command and Data Handling Subsystem (C&DH) PS20008567	- Provides standard command and telemetry services
Electrical Power Subsystem (EPS) PS20004749	- Provides power distribution and fusing for all local 120 volt users via fuse distribution box – Provides power regulation and energy storage
Thermal Control Subsystem (TCS) PS20008549	- Provides heaters, sensors, and control for maintaining EM temperatures
Electrical Accommodations Subsystem PS20008636	- Provides the harness and connections for electrical components - Grounding and signal reference connections.
Structures & Mechanisms Subsystem PS20001415	- Provides mounting and protection for subsystem components - Provides a thermal path to carry dissipated component power

3.1.1 Power EM Functional Description

The Power EM contains the power regulating functions of the electrical power subsystem (EPS) described in Performance Specification PS20004749. It also includes a battery panel (20008882), which is one of the two battery panels that make up the energy storage capability of the EPS. The EM battery panel forms the +Y side of the module, while the other battery panel (20008746) is attached to the Spacecraft hex bay. Other non–power system components included within the Power

Equipment module are a bus data unit (BDU) (PS20008568), the fine Sun sensor (FSS) electronics box (20003828), fine Sun sensor head (PS20003828), and 5 (TBR–1) heater control electronics (HCE) boxes (20008550), 2 of type 5 and 3 of type 2. The BDU and HCE components interface the power subsystem components with the command and data handling subsystem (PS20008567) and the thermal control subsystem (PS20008549), respectively. The fine Sun sensor components and magnetic torque rod are part of the guidance, navigation, and control (GN&C) subsystem (PS20004937). Isometric diagrams of the Power EM, the EM battery panel, the Hex Bay battery panel and an integrated view of both battery panels are shown in Figures 1, 2, 3, and 4, respectively.

Most of the components (boxes) shown in Figure 1 are attached to the –Z radiator panel called the power management and distribution (PMAD) panel (see Figure 5). Constant conductance heat pipes (CCHP) are imbedded in this panel to provide for waste heat rejection of the PMAD panel components (BPCs) while minimizing heater power in low load or cold cases. BPC number 1 is connected to the hex bay battery panel, and BPC number 2 is connected to the EM battery panel through BPC/battery panel interface connectors. The FSS head is attached on the outside to the –Y panel, while the torque rod is outside on the –X panel. The battery enable plugs (BEPs) are mounted on a bracket attached to the +Z close–out panel with access holes in the –X panel. All access holes are covered prior to launch.

Kinematic mounts are used to attach the EM to the primary structure. The EM battery panel is removable from the EM with the module installed on the Spacecraft bus. This will facilitate battery replacement or re–work if and when it is required (i.e. to replace workhorse batteries with flight batteries). Thermal control of the nickel–hydrogen (NiH_2) battery cells located on the battery panels is achieved by a combination of surface coatings, heaters, and thermally conductive cell sleeves.

Electrical connections between the components of all subsystems within the EM are part of the module harness design. An electrical interface connector bracket attached to the +Z close–out panel supports all module harness interface connectors required to mate with the bus harness. The –Y and –X panels are detachable, which provides for access to the components for intra–module harness connections and other related integration and test (I&T) functions. BPC/battery connector brackets are located on the +Z close–out panel. These connector brackets support the battery enable plug function, as well as external battery cell voltage monitoring and cell let–down functions to GSE connectors.

3.1.1.1 Functional Definition

Figure 6 shows a functional block diagram of the Power EM and Hex Bay Battery Panel EM.

3.1.2 Interface Definition

The EM interfaces shall comply with the requirements of Sections 3, 4, and 5 of the GIS, IS20008501. Exceptions must be explicitly noted in either the component specifications or this document.

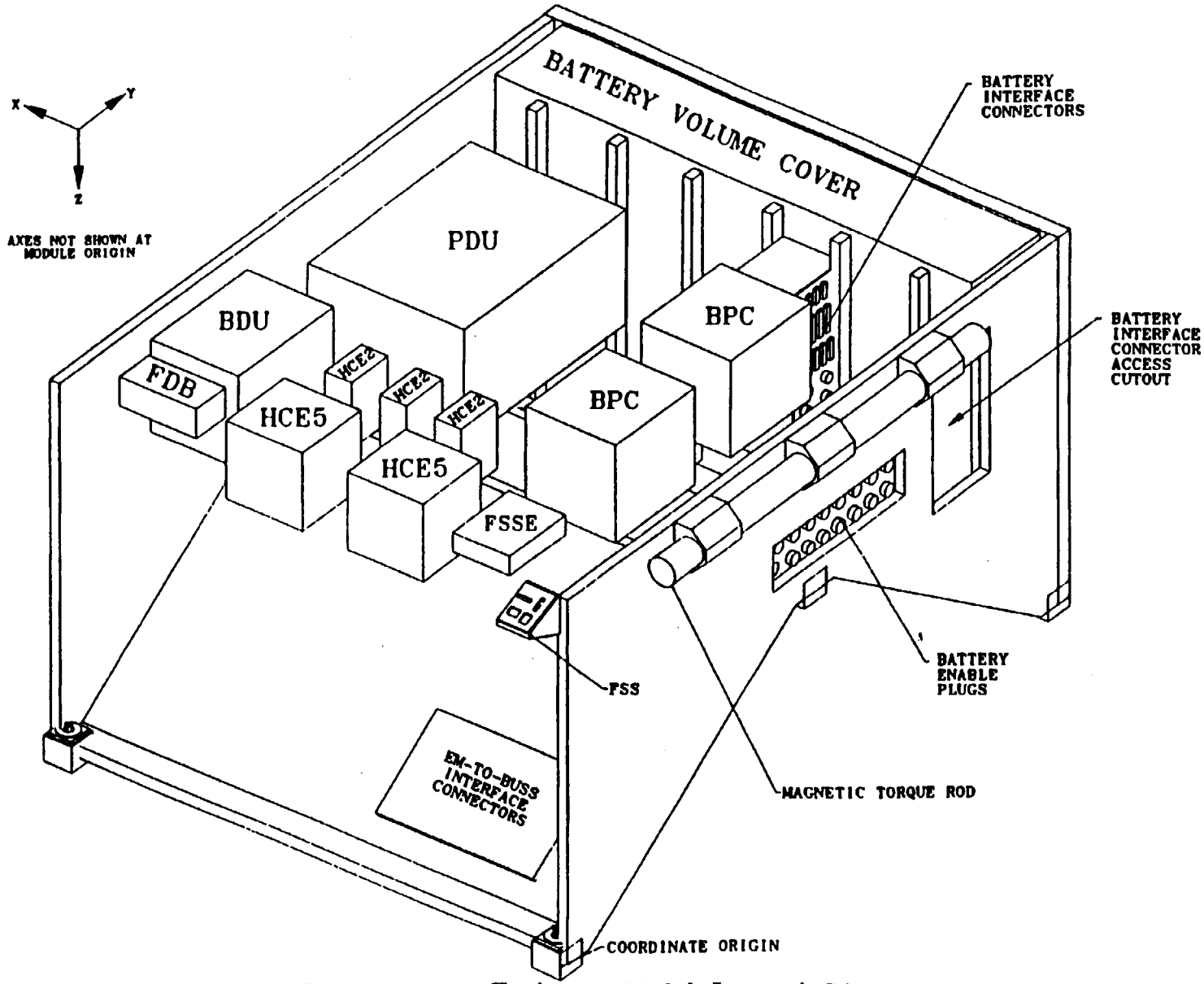

Figure 1. Power Equipment Module Isometric Diagram

(For Reference Only)

PS20001408
05 August 1993

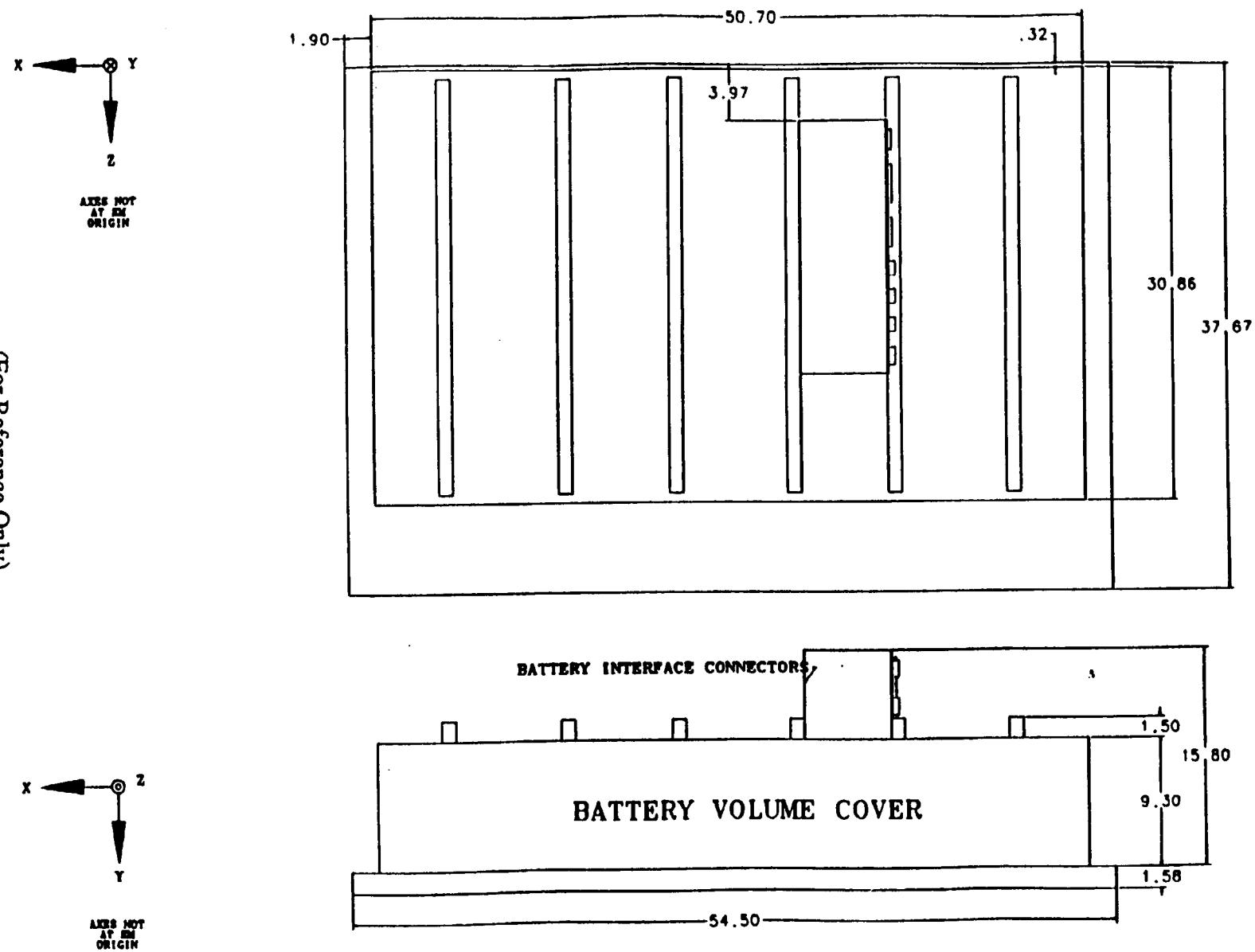

(For Reference Only)

Figure 2. Power Equipment Module Battery Panel Isometric Diagram

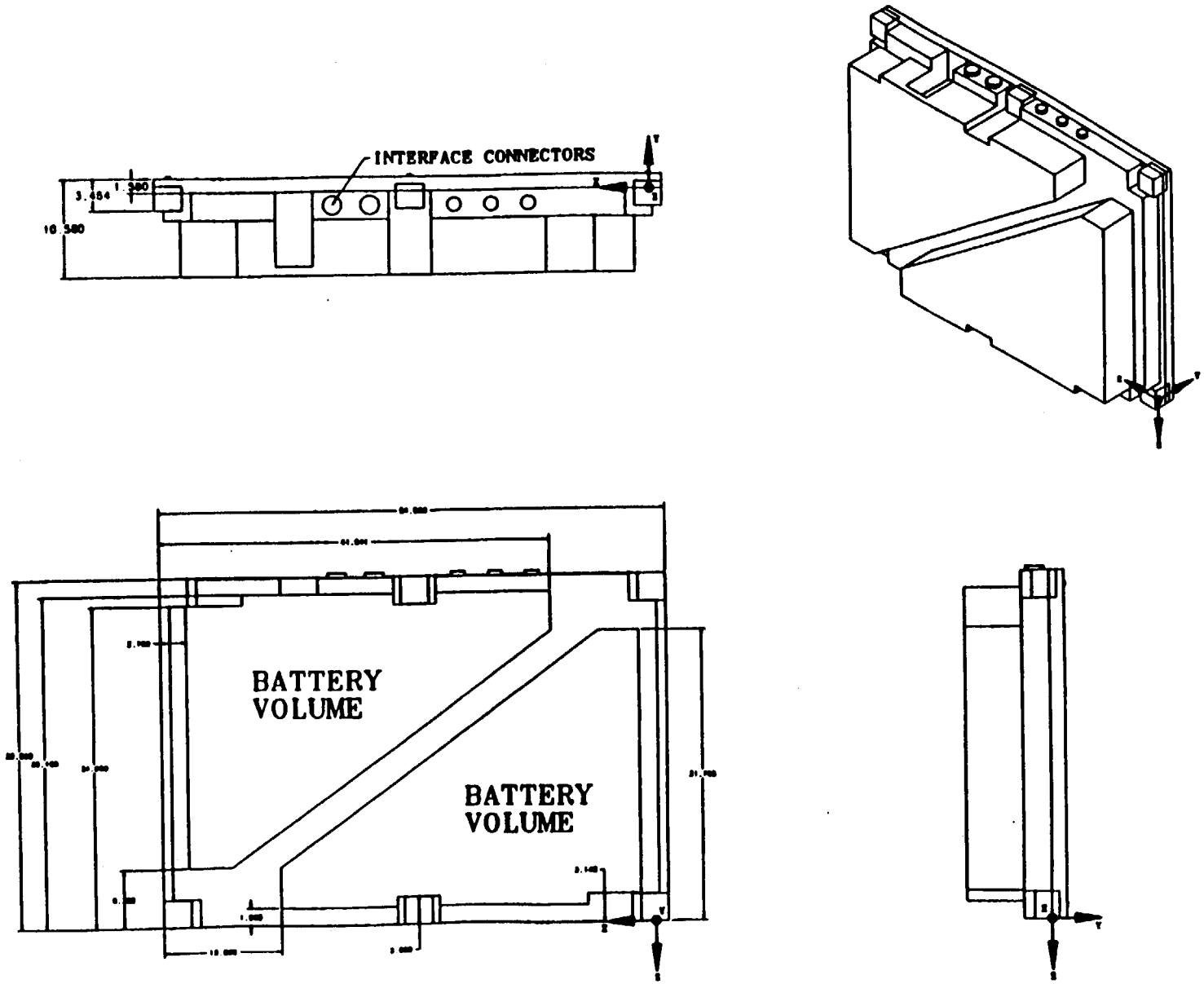

Figure 3. Hex Bay Battery Panel Isometric Diagram

(For Reference Only)

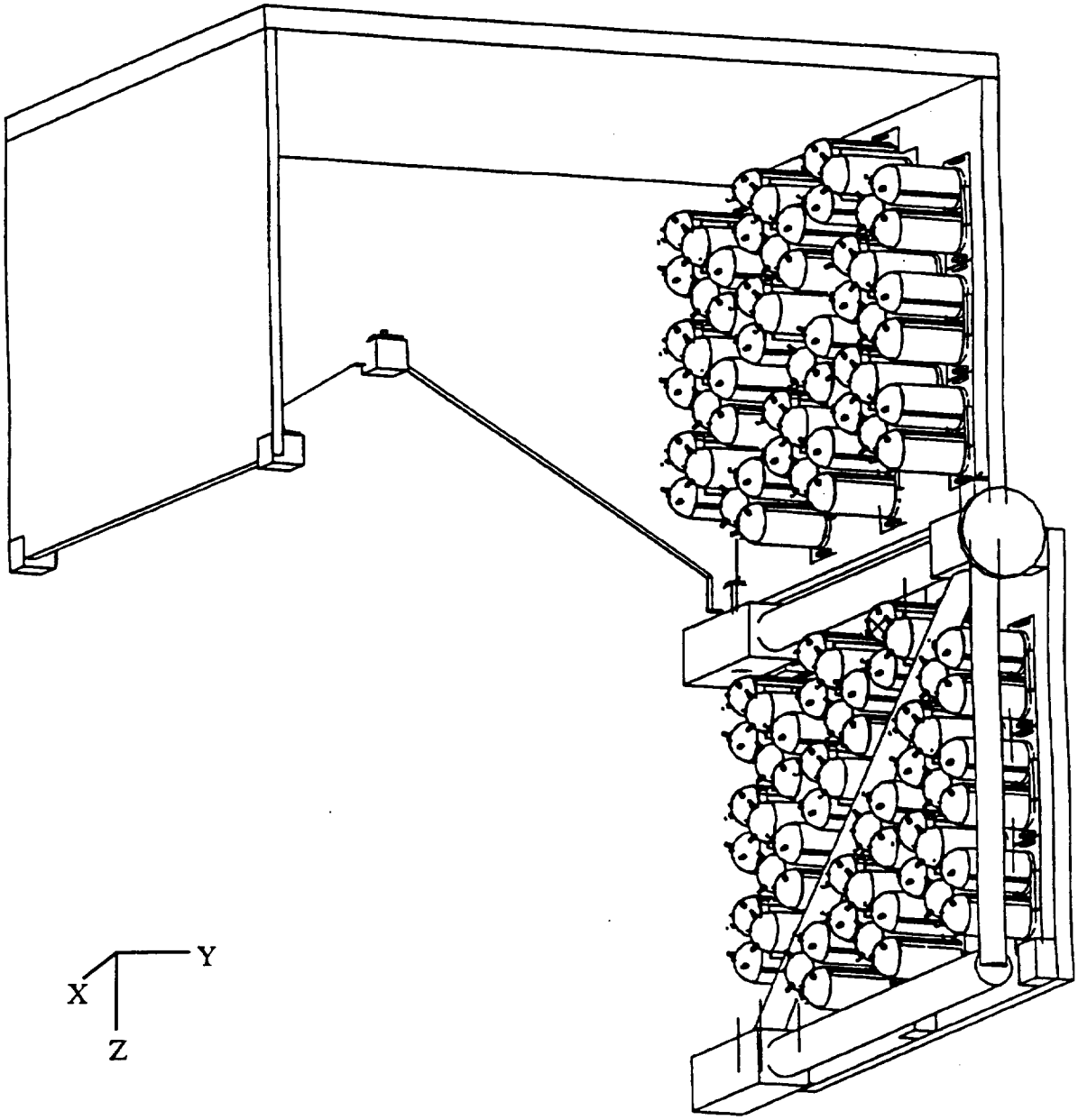

(For Reference Only)

Figure 4. Integrated Battery Panel Isometric Diagram

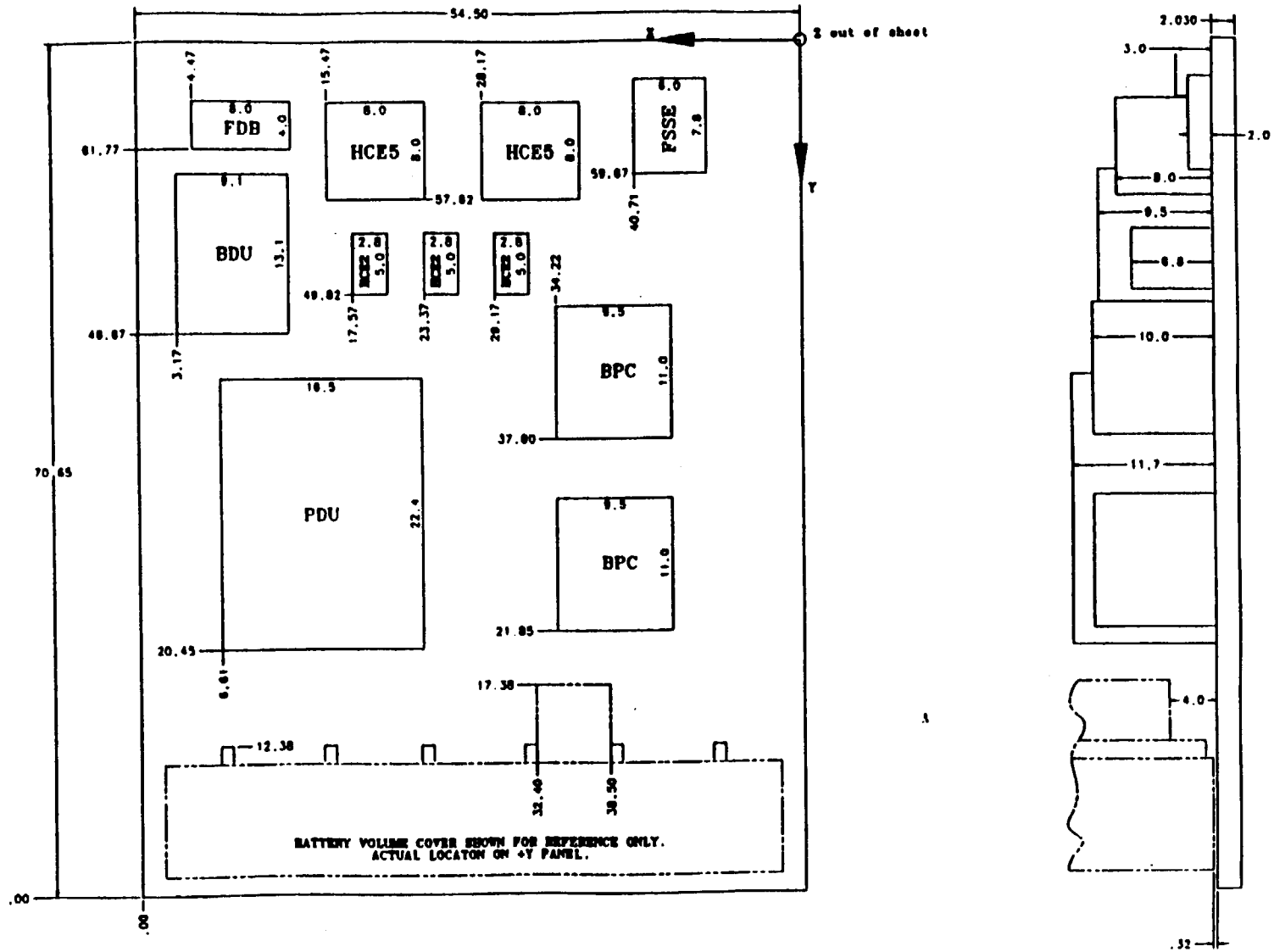

Figure 5. PMAD (–Z) Panel

(For Reference Only)

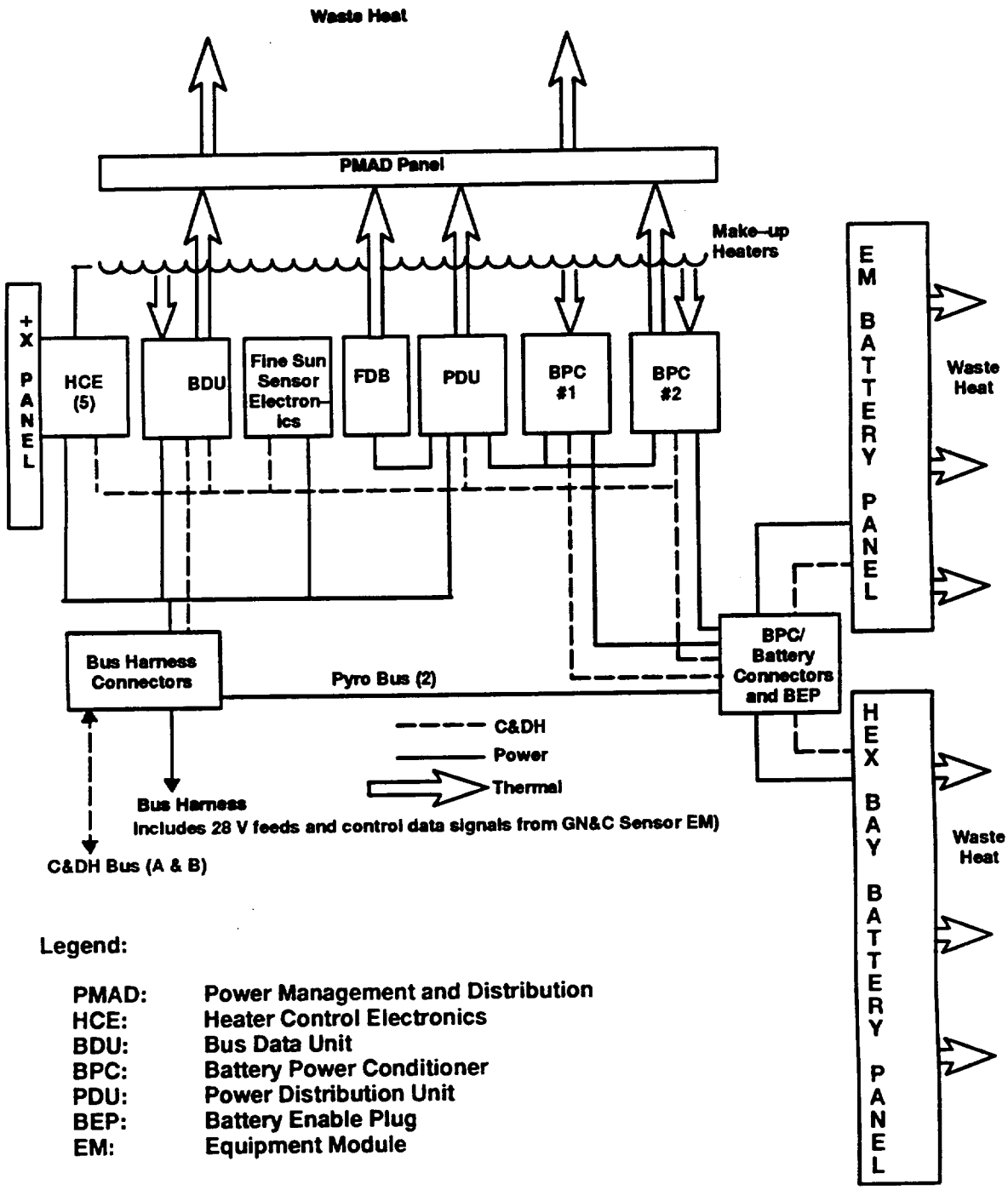

Legend:

PMAD:	Power Management and Distribution
HCE:	Heater Control Electronics
BDU:	Bus Data Unit
BPC:	Battery Power Conditioner
PDU:	Power Distribution Unit
BEP:	Battery Enable Plug
EM:	Equipment Module

Figure 6. Power EM and Hex Bay Battery Panel Functional Block Diagram

3.1.2.1 Electrical Interfaces

All Power EM electrical interfaces are defined in the Electrical Power Subsystem Performance Specification (PS20004749) and those derived from the components listed in Table II. Figure 7 is a summary of the functional electrical interfaces. Connections will only be made at the bus interface connectors.

[1] External power sources will provide full protection such that interface requirements of this specification and of those components listed in Table II are not exceeded during normal or abnormal module operation, i.e., current limiting and overvoltage protection.

[2] Performance parameters essential for normal operation shall be monitored and used by the interfacing GSE, including the test points listed in Appendix I, to determine module performance and to prevent externally induced component damage.

[3] The Power EM shall comply with the requirements of the GIS, IS20008501, Section 3, regarding power, grounds, standard signal interfaces, electro–explosive devices, test points, and connectors and pin allocations.

[4] The Power EM shall meet the requirements specified for Spacecraft equipment in the Equipment Subsystems EMI Requirements section of PN20005869 (EMC Control Plan).

[5] All electrical connections between the component in the EM and between the EM and the Spacecraft core shall be accomplished through the use of interconnecting cables, as described in the Power EM harness installation drawings, 20008682GX for the power harness and 20038713GX for the C&DH harness.

[6] These cables and connectors shall meet the Harness Design and Construction requirements of the EAS Performance Specification PS20008636.

3.1.2.1.1 Spacecraft Power Bus Interface

[1] The Power EM shall generate prime power voltage at 120 volts dc with a regulation of $\pm 4\%$.

3.1.2.2 Command and Telemetry Interfaces

[1] [The Power EM interface to the Spacecraft command and telemetry bus shall be a redundant MIL–STD–1553B bus as shown in Figure 7, and shall distribute commands to, and collect telemetry from, all components located in or on the Power EM. The BDU performance shall be as specified in the Bus Data Unit Performance Specification, PS20008568.

[2] The BDU shall interface to both the A and B Spacecraft command and telemetry buses.

[3] The BDU shall distribute commands to, and collect telemetry from, all components located in or on the Power EM. The BDU performance will be as specified in the Bus Data Unit Performance Specification, PS20008568.

[4] The Spacecraft command and telemetry bus interfaces shall have the following characteristics:

a. Connection Type: Twisted shielded pair transformer coupled

b. Signal Type: MIL–STD–1553B

[5] GN&C components within the Power EM shall receive control and data signals (and 28 V power) from the PSU located in the GN&C sensor EM via the Spacecraft bus harness.

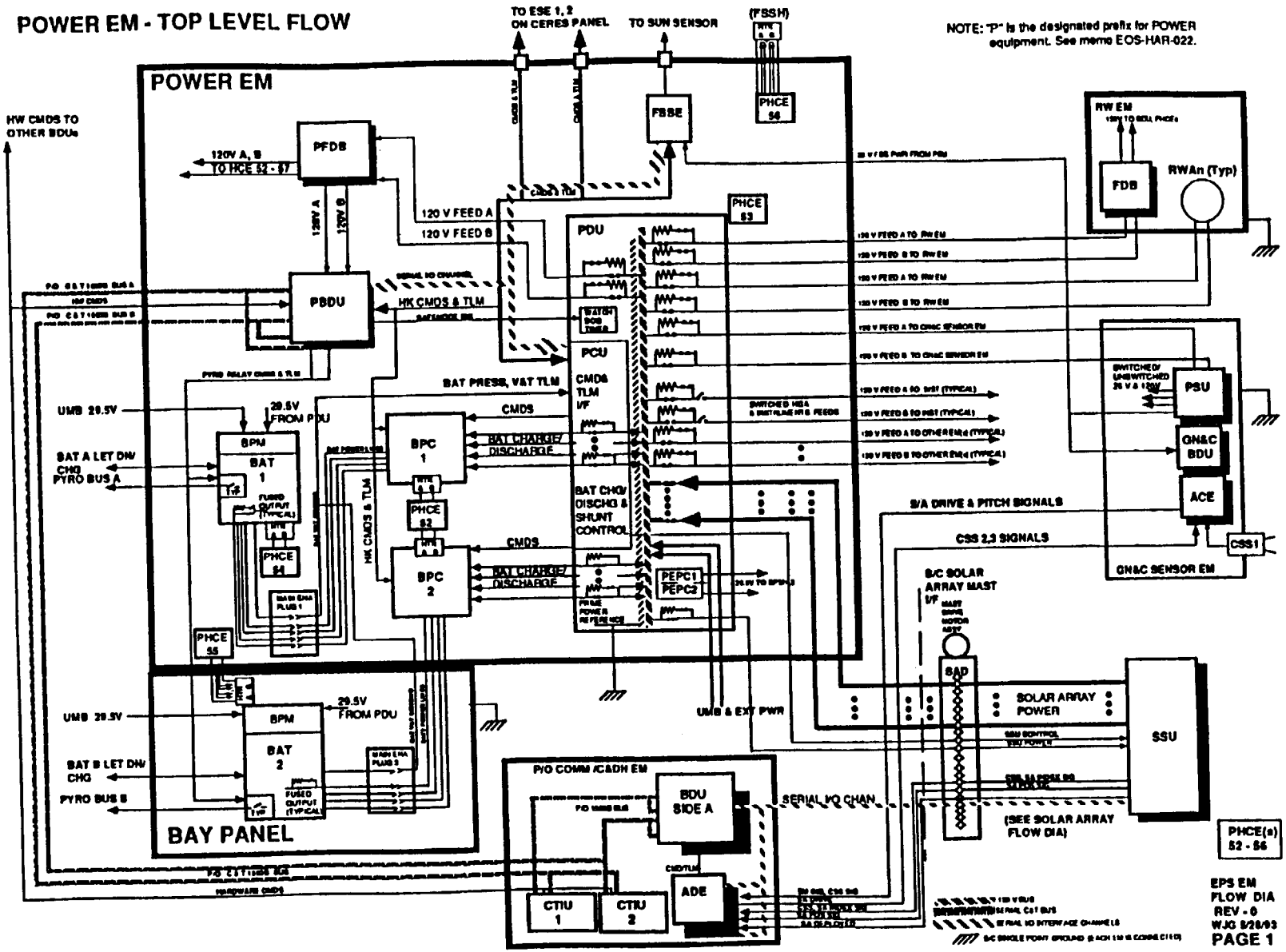

Figure 7. External Functional Interfaces

3.1.2.2.1 Command Inputs

The format, function and timing of the various commands for the EM components are listed in an appendix to the respective performance specification of each component.

3.1.2.2.2 Telemetry Outputs

The format, function and timing of the various telemetry words for the EM components are listed in an appendix to the respective performance specification of each component.

3.1.2.3 Mechanical Interfaces

[1] The Power EM shall be mounted to the primary structure via one 3-axis, two 2-axis and three single axis kinematic mounts, as shown in Figure 8.

[2] Access to the module components at the Spacecraft level of assembly shall be possible by removal of the -Y panel.

[3] Removal of this panel shall not require the removal of any other Spacecraft equipment.

[4] The Power EM structure shall comply with the requirements of the SMS Performance Specification PS20001415 regarding coordinate systems, physical characteristics, design and construction, mounting, positioning, mechanisms, dynamic characteristics, structural criteria, and tooling.

[5] The honeycomb core of the Power EM shall shall be densified locally to ensure that throughout testing no component internal to the EM experiences accelerations greater than 1.25 times those defined in the Predicted Limit Loads figure of the General Interface Specification (GIS), IS20008501.

[6] The Power EM shall be designed so it can be independently assembled, tested, attached or detached from the EOS Spacecraft structure without requiring disassembly of thermal control subsystem hardware.

[7] The Power EM panel shall provide adequate strength at the fastener locations for the mechanical mounting of the components and assemblies listed in Table II.

3.1.2.4 Thermal Interfaces

[1] All thermal control hardware (heaters, MLI, etc.) in the Power EM shall meet the thermal control hardware requirements of the GIS, IS20008501, Section 5, Thermal Interfaces.

[2] The flight hardware component characteristics shall be as specified in the Thermal Control Subsystem (TCS) Performance Specification, PS20008549.

[3] The Power EM shall acquire, spread, and reject component heat to the external Spacecraft sink as necessary to maintain the temperature at each component interface to levels below the maximum limits specified in the Temperature Requirements table in Section 5 of the GIS, IS20008501. (Constant conduction heat pipes embedded into the panel itself may be incorporated into the –Z and +Y panels of the EM to meet this purpose.)

[4] The heater control electronics (HCE5), using heaters and thermistors in the EM, shall maintain the temperature at each component interface to levels above the minimum limits specified in the Temperature Requirements table in Section 5 of the GIS, IS20008501.

[5] Heat dissipating components shall meet the EM/Component Conductive Interface requirements in the GIS, IS20008501, Section 5.

[6] Temperature Sensing Assemblies shall be connected to the BDU for the purpose of tracking thermal performance.

3.1.3 Major Component List

The major components of the Power EM are listed in Table II.

Table II. Power Equipment Module Components

Subsystem	Component	Part Number
Structures and Mechanisms	Secondary Structure	**(TBD–1)**
	–Y Panel	20008880G1
	Equipment/Radiator Panel (PMAD)	20008881G1
	Kinematic mounts (6)	20001400
	+X, –X End Panel	20008883
	+Z Close–out Panels (5)	20043177–81
	Bus Interface Connector Bracket	**(TBD–2)**
	BPC/Battery IF Connector Bracket	**(TBD–3)**
Thermal	Power Module Blanket/Installation	20008675
	Heater Control Electronics (5) **(TBR–2)**	20008550
	PMAD Survival Heaters (12)	20008788
Power	Battery Panel, Power EM	20008882
	Battery Panel, Hex Bay	20008746
	Battery Power Conditioner (2)	20008596
	Power Distribution Unit	20008599
	Fuse and Distribution Box	20008694
Command and Data Handling	Bus Data Unit	20008568
Electrical Accommodations	Power Module Power Harness	20008682GX
	Power Module C&DH Harness	20038713GX
Guidance, Navigation, and Control	Fine Sun Sensor Electronics	20003828
	Fine Sun Sensor Head	20003828

3.2 Characteristics

3.2.1 Performance

The performance of the Power EM is limited to the combined functions of several subsystem components interconnected at the module level. Performance requirements are extracted or derived from the subsystem specifications of subsystem components which make up the Power EM equipment complement.

3.2.1.1 Power EM EPS Primary Functions

The Power EM shall support the EPS (PS20004749) with the following functions:

[1] Provide all instrument and housekeeping regulated +120 Vdc ± 4% electrical power at the user load interface during all mission phases for a minimum operational lifetime of five years with a solar array source voltage of up to +127 Vdc (@ Vssu) and a battery source voltage range of +50 to +90 Vdc.

[2] Provide for connecting and disconnecting the instruments and the high gain antenna (HGA) from the main electrical bus.

[3] Provide independent, fused, dual power feeds to housekeeping equipment and instruments via the bus harness.

3.2.1.2 Power Management and Distribution Characteristics

The Power Distribution Unit (PDU), PS20008599, as described in the EPS Performance Specification PS20004749, contains control circuitry for power management and the central power distribution bus. The PDU shall provide control signals via the EM bus interface connector to the SSU to shunt excess solar array power for main bus voltage regulation. Internal to the Power EM, the PDU provides a control signal to each of the BPCs during the charge and discharge operating modes to maintain bus voltage regulation.

Redundant fuses and connectors provide distribution of the +120 V bus via the EM bus interface connector to the Spacecraft loads. The instrument loads and the HGA have on/off relays on the load feed lines in the PDU for ensuring personnel safety during I&T.

3.2.1.3 Battery Power Conditioner (BPC) Characteristics

The BPC (PS20008596) provides power conversion for battery charge and discharge control functions. During periods of sunlight, the BPC acts as a PWM buck charge regulator which converts regulated bus power to battery charge power. During eclipse and peak load conditions, the BPC acts as a PWM boost discharge regulator which converts battery power to regulated bus power. There is one BPC per battery with internal redundancy of 4–for–3 charge/discharge channels. The BPC operation and requirements are further described in the EPS Performance Specification, PS20004749.

3.2.1.4 Power EM and Hex Bay Battery Panel Characteristics

Two battery panels make up the total battery system. The functions of each battery panel are identical, but they are structurally different due to different attachment locations and resultant requirements. The Power EM battery panel is designated as 20008882 and is interfaced with BPC number 2. Battery panel 20008746 is located on the hex structure and is interfaced with BPC number 1 (refer to Figure 6). The battery requirements are further described in the EPS Performance Specification, PS20004749.

3.2.1.5 Power EM and Battery Panel Thermal Control Subsystem (TCS) Functions

The TCS, PS20008549, shall maintain the power EM components and battery panel interface temperatures within allowable limits, thermal gradients, and temperature transition limits for all expected environmental and thermal loading conditions encountered during integration and testing, prelaunch, launch/ascent, and orbital phases of the EOS mission.

3.2.1.5.1 PMAD Equipment Panel

The PMAD equipment panel shall have sufficient CCHPs imbedded in the panel core structure to allow waste heat rejection of the PMAD–mounted equipment.

3.2.1.5.1.1 Maximum Temperature Limit

The PMAD panel thermal control system shall control the PMAD–mounted equipment to the limits defined in the performance specifications for the individual equipment listed in Table II.

3.2.1.5.1.2 Minimum Temperature Limit

Five (TBR–3) heater control electronics (HCE) modules (PS20008550 Types 2&5) are located on the +X panel are interfaced with heaters on the PMAD panel to maintain minimum equipment temperature limits as defined in the individual equipment performance specification listed in Table I. There are 2 HCE–5 for battery temperature control and 3 HCE–2 for other Power EM components.

3.2.1.5.2 Battery Panel, Power EM

3.2.1.5.2.1 Maximum Temperature Limit

[1] The Power EM battery panel, 20008882, shall have a passive thermal dissipation control system of optical surface mirrors bonded to the +Y side of the panel. Heat generated in the individual battery cells (54) is conducted by a battery cell sleeve to the panel structure where it is radiated to space.

[2] The thermal design shall limit the maximum battery temperature to the limit defined in the Battery Panel Performance Specification, PS20008882.

3.2.1.5.2.2 Minimum Battery Temperature

One (TBR–4) HCE–5 module shall be interfaced with heaters on the Battery Panel to maintain minimum cell temperature limits as defined in the Battery Panel Performance Specification, PS20008882. Control is a function of cell temperatures from individual cell–mounted thermistors.

3.2.1.5.2.3 Temperature Gradient

The battery thermal control system shall limit battery cell temperature differences to those specified in the Battery Panel Performance Specification, PS20008882.

3.2.1.5.3 Battery Panel, Hex Bay

3.2.1.5.3.1 Maximum Temperature Limit

[1] The Hex Bay battery panel, 20008746, has a passive thermal dissipation control system of optical surface mirrors bonded to the +Y side of the panel. Heat generated in the individual battery cells (54) is conducted by a battery cell sleeve to the panel structure where it is radiated to space.

[2] The thermal design shall limit the maximum battery temperature to the limit defined in the Hex Bay Battery Panel Performance Specification, PS20008746.

3.2.1.5.3.2 Minimum Battery Temperature

One (TBR–5) HCE5 module is interfaced with heaters on the Hex Bay battery panel to maintain minimum cell temperature limits as defined in the Hex Bay Battery Panel Performance Specification, PS20008746.

3.2.1.5.3.3 Temperature Gradient

The battery thermal control system shall limit battery cell temperature differences to those specified in the Hex Bay Battery Panel Performance Specification, PS20008746.

3.2.1.5.4 Automatic Over–Temperature Protection

Each battery panel shall have thermostatic heater control to provide over–temperature heater shut–off to maintain battery integrity.

3.2.1.6 Power EM Mechanical Subsystem Functions

3.2.1.6.1 Power EM

Mechanical subsystem functions which support the Power EM design shall include the module structure, the kinematic mount interface to the core structure, and EM interface connectors.

3.2.1.6.1.1 Structure

[1] The Power EM structure shall provide mounting and protection to the components mounted within the EM from all mission–related environments defined in the CEI Specification, PS20005396, and GIS, PS20008501, Section 6.

[2] The requirements defined in Mechanical Performance Specification, PS20001415, Section 3.7.3, shall be met.

[3] The facesheet and honeycomb core for all structural panels shall be aluminum to facilitate thermal conduction to the radiator surfaces.

[4] The facesheet and core thickness shall be sized to provide adequate stiffness to meet the minimum frequency requirement of 35 Hz. The core shall be densified locally as required to provide adequate strength for component fasteners. The layout of major components within the EM is shown in Figures 1, 2, and 4.

[5] Component spacings shall provide adequate clearance for harness runs.

[6] The Power EM shall be designed to facilitate producibility, integration, and accessibility to the internal components while minimizing weight.

[7] The Power EM structure shall be capable of withstanding on–orbit environments given in the SMS Performance Specification, PS20001415, for a period of at least five years.

[8] The Power EM structure shall withstand the quasi–static, acoustic, random vibration, and shock loads, as well as pressure loads and electromagnetic radiation of the launch environment.

[9] The factors of safety and definition of the analytical requirements shall be as contained in the SMS Performance Specification, PS20001415.

[10] The ability to survive these environments shall be verified as defined in PS20005404.

3.2.1.6.1.2 Kinematic Mounts

[1] A total of six kinematic mounts (KMs) shall be used to support the Power EM mechanical load and to minimize the interaction with the core structure.

[2] The six KMs shall be divided into four single–axis constraint KMs, one dual–axis constraint, and one three–axis constraint. The KMs shall be distributed as shown in Figure 8, Kinematic Mount Distribution.

3.2.1.6.2 Battery Panel, Power EM

The Power EM structure shall provide all the mechanical subsystem support functions to the Power EM battery panel.

3.2.1.6.2.1 Structure

The Power EM battery panel structure shall be as defined in PS20008882.

3.2.1.6.2.2 Panel Access

The Power EM battery panel (+Y) shall be removable from the Power EM at any time during I&T or launch site preparations.

3.2.1.6.3 Interface Connectors

Power EM interface connectors shall meet the requirements of GIS, IS20008501, Section 3.6, and the Electromagnetic Compatibility Control Plan, PN20005869, Section 1.4.11.1.

3.2.1.7 Power Module Electrical Accommodation Subsystem (EAS) Functions

The EAS functions, as defined in PS20008636, shall support electrical interconnections of Power EM components and the battery panel within the module, as well as electrical interfaces to the Spacecraft.

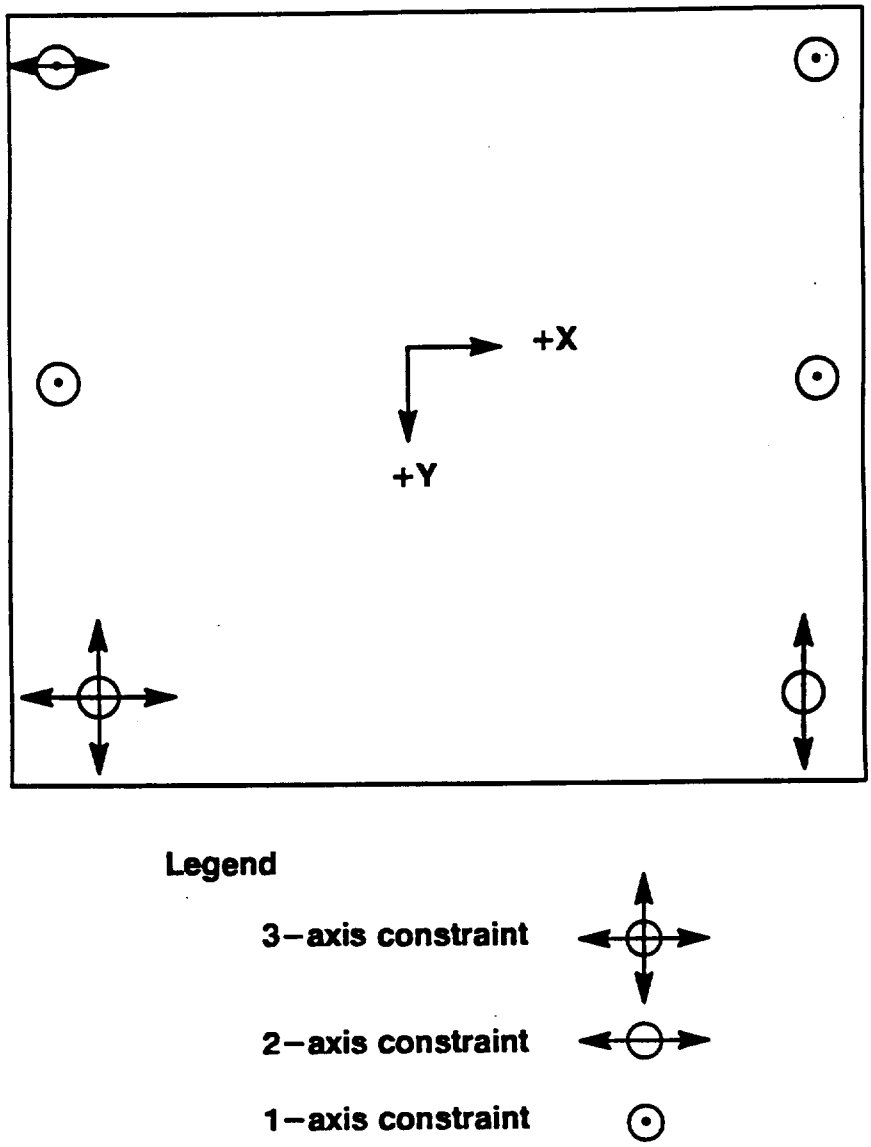

Figure 8. Power EM Kinematic Mount Distribution

3.2.1.7.1 Power EM Harness

The Power EM internal harness shall meet the harness bend radius requirements of EAS, PS20008636, Section 3.3.6.8.

3.2.1.7.2 Battery Enable Plugs (BEP)

The BEP and Safing BEP for each battery panel is located at the –X panel interface as shown in Figure 1.

3.2.1.8 Guidance, Navigation and Control

All GN&C hardware (FSSE, and FSSH) in or on the Power EM shall meet the performance requirements of their respective performance specifications, the GIS, IS20008501, and the GN&C Performance Specification PS20004937.

3.2.1.9 Power EM Monitoring

[1] The Power EM shall provide battery temperature, battery pressure, battery voltage monitors to permit monitoring by the GSE in the absence of Spacecraft power.

[2] The Power EM shall also provide power bus voltage, power bus current(s) and mode control monitors to permit monitoring by the GSE with the Spacecraft powered.

3.2.2 Physical Characteristics

The components on the Power EM shall comply with the power consumption, power dissipation, and mass allocations given in Table III. The requirements for maximum power dissipation, as a function of Spacecraft operating mode, is given in Table IV.

3.2.2.1 Mass

The total mass of the Power EM, including the Torque Rod mounted on the EM, and the Hex Bay Battery Panel shall not exceed 1175.0 pounds.

3.2.2.2 DC Power Consumption

The maximum orbit average DC power consumed by the Power EM, including the Torque Rod mounted on the EM, and the Hex Bay Battery Panel shall not exceed 175.0W [one orbit average, science mode, end–of–life (five years)].

3.2.2.3 Power Dissipation

The power dissipated by the Power EM for the different EOS Spacecraft operating modes shall be specified in the TCS Performance Specification, PS20008549. The dissipation of the various Power EM components by Spacecraft modes is given in Table IV.

3.2.2.4 Dimension

3.2.2.4.1 Power EM Dimension

The envelope of the Power EM shall not exceed the maximum dimensions given below, including connectors, as defined in the Martin Marietta Astro Space (Astro Space) assembly drawing 20001408.

Length (X)	70.7 inches **(TBR–6)**
Width (Y)	54.5 inches **(TBR–7)**
Height (Z)	40.5 inches **(TBR–8)**

3.2.2.5 Transport and Storage

[1] Accommodations for tie–downs, pallets, packaging, and containers necessary for transport and storage of the Power EM shall be made to reduce the likelihood of damage to flight equipment, and to ease handling by and interaction with ground support equipment (GSE).

[2] Proper orientation for transportation or storage shall be obvious by marking and design.

[3] The Power EM shall provide lift points capable of supporting the Power EM and any accompanying GSE under loads of 2g vertical (per MIL–STD–1367A).

[4] When four or more lift points are provided, any combination of three shall be capable of lifting the entire load.

3.2.2.6 Integration and Test

[1] The Power EM shall bring out test points external to the Spacecraft on the module (a) to permit EMC measurements on the power bus, (b) to verify the integrity of the redundant fuses, (c) to verify the integrity of all double insulation, including power distribution and battery cells, and (d) for the Signal Reference Plane and the Prime Power reference, at the Spacecraft level. A list of the Power EM test points is given in Appendix I.

[2] The Power EM shall be able to be independently assembled and tested and independently attached to or detached from the Spacecraft Core.

[3] The Power EM design shall define the GSE required for cooling the EM during I&T as well as during processing at the launch site.

[4] The Power EM shall incorporate the Thermal GSE interfaces which are necessary to ensure adequate ground cooling.

[5] The interfaces shall be accessible to the thermal GSE at the Spacecraft level of assembly.

[6] The Power EM Battery Panel shall provide the necessary test points to discharge the batteries.

[7] This test point interface shall be accessible at the Spacecraft level and designed to ensure personnel cannot be exposed directly to battery power.

[8] The Power EM design shall ensure that access to the interface connectors is sufficient to preclude the need for blind–mate connectors during installation of the Power EM on the Spacecraft Core.

3.2.2.7 Layout

[1] The Power EM shall have a panel that can be removed to provide access to equipment contained within the module at the EM and spacecraft levels of assembly.

[2] Removal of this panel shall be possible without requiring removal of any other spacecraft equipment.

[3] The battery panel shall have the capability to be removed, provided adequate external structural support to the PMAD panel (–Z) is provided.

[4] Fuses for the Power EM shall be located, to the extent practical, such that it is possible to replace or view any fuse without requiring any disassembly of the EM.

[5] The Power EM layouts shall, to the extent practical, ensure that any component contained within the EM can be removed without having to remove any other component.

[6] Component spacings shall provide adequate clearance for harness runs.

[7] All flight equipment which would require maintenance during a storage period of 5 years or less shall be accessible when the Spacecraft is in its stored configuration.

[8] All Spacecraft components which are fragile or otherwise susceptible to damage shall, where practical , be guarded or located so as to reduce this susceptibility.

[9] Sensitive adjustment controls and actuators shall be located or guarded to protect them from inadvertent perturbation.

[10] Component labeling shall be visible when the component is installed in the parent assembly or stowed. Labels shall be installed such that they are readable by the unaided human eye.

Table III. Power EM Component Allocations

Power EM Component	Power(1) Consumption, W	Power(1) Dissipation, W	Mass, lbs
BDU	9.2	8.5	22.9
PDU	38.4	42.6	101.6
BPC1	18.0	79.0	23.5
BPC2	18.0	79.0	23.5
Power EM Battery Panel (20008882)	4.9	132.0	293.2
Hex Bay Battery Panel (20008746)	6.6	132.0	324.5
HCE (5)	22.8	20.8	19.6
Misc. Thermal H/W	49.5	45.0	20.7
Heat Pipes	0	0	1.9
Power EM Structure & Mounts	0	0	157.3
Hex Bay Panel Structure & Mounts	0	0	55.0

Table III. Power EM Component Allocations (Continued)

Power EM Component	Power[1] Consumption, W	Power[1] Dissipation, W	Mass, lbs
Harness–power & C&DH	0	38.3	102.4
Power EM MLI	0	0	9.4
FSS Electronics	2.8	2.8	2.4
FSS Head	0	0.0	0.9
Fuse Distribution Box	0	1.0	1.9
Unallocated Margin	4.8	0	14.3
Totals	175.0	581.0	1175.0

[1]Science Mode

Table IV. Power Equipment Module Thermal Dissipation

Component Maximum Thermal Dissipation (watts)						
Component	Ground Test Mode	Launch/ Ascent Mode	Standby/ Delta–V/ Science Mode	Survival Mode	Safe Mode	
					Level 0	Level 8
Power EM Battery Panel	132	90.8	132	128.6	132	128.6
Hex Bay Battery Panel	132	90.8	132	128.6	132	128.6
Battery Power Condit.	158	108.7	158	134.1	158	134.1
Power Distribution Unit	42.6	42.6	42.6	42.6	42.6	42.6
Bus Data Unit	8.5	8.5	8.5	8.5	8.5	8.5
Heater Control Elect. (2)	0.8	0.8	0.8	0.8	0.8	0.8
Heater Control Elect. (5)	20	20	20	20	20	20
Fine Sun Sensor Elect.	2.8	2.8	2.8	2.8	2.8	2.8
Fine Sun Sensor Head	0	0	0	0	0	0
Power Harness	38.3	26.3	38.3	26.3	38.3	26.3
Fuse Distribution Box	1.0	1.0	1.0	1.0	1.0	1.0
Misc. Thermal H/W	45.0	45.0	45.0	45.0	45.0	45.0
Totals	581.0	437.3	581.0	538.3	581.0	538.3

3.2.2.8 Configuration

The Power EM shall conform to Astro Space assembly drawing 20001408. These drawings shall define the following parameters:

a. physical size

b. mounting requirements and interfaces

c. external finishes

d. electrical connector locations and sizes

e. connector reference designators

f. method of identification.

3.2.2.9 Natural Frequency

The natural frequency of the Power EM shall not exceed the level specified in the appendix to the Structures and Mechanisms Subsystem Performance Specification, PS20001415.

3.2.3 Reliability

The probability of mission success, P_S, is allocated to the individual subsystems and their components. This information may be found in the applicable performance specifications.

3.2.4 Durability

The Power EM shall be designed to support a minimum five–year operational life.

3.2.5 Maintainability

[1] The Power EM shall be designed so that no regular maintenance will be required.

[2] Removable dust covers or other protective devices shall be provided over electrical connectors.

3.2.6 Environmental Conditions

3.2.6.1 General

[1] The Power EM shall be capable of meeting the requirements defined in this document after exposure to the handling, transportation, and launch environments defined in the GIS, IS20008501 Section 6

[2] and to the test environments defined in the Verification Specification (VS), IS20005404.

[3] The Power EM shall be capable of be capable of meeting the requirements defined in this document during exposure to the mission orbit environment specified in the GIS, IS20008501 Section 6.

[4] The Power EM shall be capable of meeting all performance requirements when operating in Spacecraft bay 1 on the –Z side of the Spacecraft.

[5] The Power EM shall comply with the requirements of the Contamination Control Plan, PS20001412.

3.2.6.2 Sine Vibration

[1] The Power EM shall remain undamaged during and following exposure to the sine vibration tests defined in the appendix to the Structure and Mechanisms Subsystem Performance Specification, PS20001415.

[2] The EM structure shall ensure that no component internal to the EM experiences accelerations greater than 1.25 times those defined in the Predicted Limit Loads figure of the General Interface Specification (GIS), IS20008501 when the EM experiences the test levels defined above.

3.2.7 Transportability

[1] The Power EM shall be capable of being transported by surface vehicle or aircraft.

[2] The transporting environment shall be controlled so as to be less severe than the specified operating environment.

3.3 Design and Construction

[1] The Power EM design shall be such that it can be independently assembled, tested, and attached to or detached from the EOS–AM Spacecraft structure.

[2] The Power EM design shall preclude improper installation to the Spacecraft, where practical.

[3] All electrical connectors shall be selected, sized, keyed, and/or marked such that incorrect attachment to the mating connector is prevented.

[4] All connectors shall attach such that the connectors cannot be inadvertently unlocked during ground operations.

[5] The EM design shall comply with the Design and Construction requirements specified in the GIS, IS20008501, for General requirements, Identification and Marking except for the Content paragraph, Finishes, Venting, Interchangeability, and Drawing Terms and Tolerances.

3.3.1 Materials, Processes, and Parts

[1] All materials, parts, and processes used in the design and construction of the recorder EM shall be selected and controlled in accordance with the requirements for Tooling in section 4 of the GIS, IS20008501.

3.3.2 Electric Fields

[1] Components shall meet the electric field emissions requirements in the Equipment Radiated Emissions (RE02, RE01/RE04) section of the Equipment EMI Requirements in the EMC Control Plan, PN20005869.

[2] Components shall meet the requirements of the Radiated Susceptibility (RS03) Electric Fields section and the

[3] Radiated Susceptibility On–Orbit Environment section of the Equipment EMI Requirements in the EMC Control Plan, PN20005869.

3.3.3 Magnetic Fields

[1] Components shall meet the magnetic field emission and

[2] magnetic properties requirements in the Equipment Radiated Emissions and Equipment Radiated Properties sections respectively of the Equipment EMI Requirements in the EMC Control Plan, PN20005869.

[3] Components shall meet the requirements of the Radiated Susceptibility (RS01) Magnetic Fields section of the Equipment EMI Requirements in the EMC Control Plan, PN20005869.

3.3.4 Nameplates and Product Marking

[1] The Power EM shall be marked for identification in accordance with the Identification Marking Standard, S32534, Rev E, and ICD 20001411.

[2] The proper orientation for placing items in storage or transportation containers shall be obvious by design or marking.

Conspicuous markings or labels shall be affixed to the Power EM components. The identification shall contain, as a minimum, the following:

a. Astro Space Part Number

b. "Power Equipment Module"

c. Revision Level

d. Date of Manufacture

e. Contract Number

[3] Applicable date-sensitive information shall also be identified.

[4] Hardware or equipment which is not suitable for use in flight, and which could be accidentally substituted for flight or flight spares hardware, shall be plainly marked and identified to indicate this status.

[5] All test points, adjustment devices, and alignment points shall be labeled for positive identification.

[6] Wires and cables for hardware shall not be identified by hot stamping directly onto primary or secondary (shield) insulation.

3.3.5 Workmanship

[1] The electrical design of the Power EM shall be in accordance with the design requirements specified in NHB 5300.4 (3A-1, 3G through 3K).

3.3.6 Safety

[1] The design shall meet the factors of safety presented in the mechanical section of IS20008501.

[2] Hazards which cannot be eliminated or removed shall, where practical, be prevented through incorporation and use of safety devices or features.

[3] Remaining hazards shall be controlled using warning devices and/or special procedures.

[4] Automated detection and safing of hazards which may cause personnel injury or loss of the Spacecraft shall be independent of those subsystems being monitored.

[5] Where practical, the detection and safing of lesser hazards shall also follow this practice.

[6] Design decisions shall accommodate compliance with safety requirements specified in this document before accommodating any other considerations (e.g., cost, schedule, performance).

3.3.7 Human Performance/Human Engineering

[1] The Power EM shall comply with the human engineering criteria of MIL-STD-1472.

3.4 Documentation

Documentation shall be in accordance with the Data Requirements list of the EOS-AM Spacecraft Statement of Work (SOW), contract number NAS5-32500.

3.4.1 Specifications

All parent and component specs associated with this spec are shown in the EOS-AM Spacecraft Specification Tree, 20008536.

3.4.2 Drawings

[1] The Power EM shall be defined by prepared drawings. Drawing 20001408 shall define and control the physical parameters of the EM,

[2] and drawings 20008682GX and 20038713GX shall describe the EM Power and C&DH harnesses, respectively.

3.4.3 Test Plans and Procedures

[1] Detailed qualification and acceptance test plans and procedures shall be prepared.

3.5 Precedence

In the event of conflicting requirements between the documents referenced herein and the content of this document, the following descending order of precedence shall be used in resolution of the conflict:

a. Requirements Document for the EOS--AM Spacecraft (RD)

b. Performance Assurance Requirements for the EOS Observatories (PAR)

c. Unique Instrument Interface Documents

d. The General Instrument Interface Specification (GIIS)

e. Contract End Item (CEI) Specification

f. External Interface Control Documents(ICD's) (e.g., EOS to Launch Vehicle, EOS to TDRSS, etc.)

g. Subsystem and Major Assembly Specifications

h. Component Specifications

4 QUALITY ASSURANCE PROVISIONS

This section outlines the requirements and structure of a quality assurance program for the Power EM. The purpose of the quality assurance program is to demonstrate that the design of the Power EM and its components meet the performance requirements, has been manufactured properly, and will operate as designed in association with all other EOS–AM Spacecraft interfaces. The PAIP, PN20005397, documents the overall quality assurance approach for the EOS–AM Spacecraft. The specifics of the performance verification process are documented in the Verification Plan, PN20005404.

4.1 General

Each of the requirements in Section 3 of this specification shall be verified by performance of inspection, analysis, demonstration, or test as delineated in the test procedure. Test methods and measurements shall be compliant with all requirements specified herein.

The first Power EM battery panel (workhorse) is to be tested and verified according to the principles of a protoflight test program. The second Power EM battery panel is to be flight acceptance tested and used to replace the protoflight (workhorse) panel prior to Spacecraft shipment to the launch site. Both the Power EM and Hex Bay workhorse battery panels will support the power EM testing.

4.1.1 Responsibility for Tests

Unless otherwise specified herein, or in the Statement of Work, acceptance and qualification testing shall be performed by Astro Space.

4.1.2 Special Tests and Examinations

Not Applicable

4.1.3 Reliability Test

Not Applicable

4.1.4 Engineering Evaluation and Test

Not Applicable

4.1.5 Protoflight and Flight Acceptance Test

Protoflight and flight acceptance tests, combined with the other verification methods of Attachment A (provided under separate cover), shall verify that the flight hardware design meets the technical requirements of Section 3 of the Power EM specification to assure operational suitability in the defined environments. Flight hardware shall be used for protoflight qualification testing. No ETM or mass models will be used to substitute for protoflight or flight testing.

Protoflight tests, where specified, shall consist of qualification–level exposure of the first flight article for flight acceptance–level durations (time and/or cycles). Flight tests shall consist of acceptance–level exposure for flight–level durations (time and/or cycles).

Tests shall be performed under strict control of environments and test procedures. Adjustments or tuning of test hardware is not permitted throughout the entire test program. The requirements of Section 3 to be verified prior to, or after each environment, shall be as specified in Attachment A.

4.1.6 Installation Test and Checkout

Installation testing and checkout such as continuity checking, interface mating, support equipment compatibility, and documentation verification shall be done in accordance with the Power EM Test Plan, PN20001408. The Power EM integration and test flow is shown in Figure 9, and the Power EM battery panel I&T flows is shown in Section 4 of the Power EM Battery Panel Performance Specification, PS20008882. The Power EM and Hex Bay battery panels must be tested before integration to the Power EM.

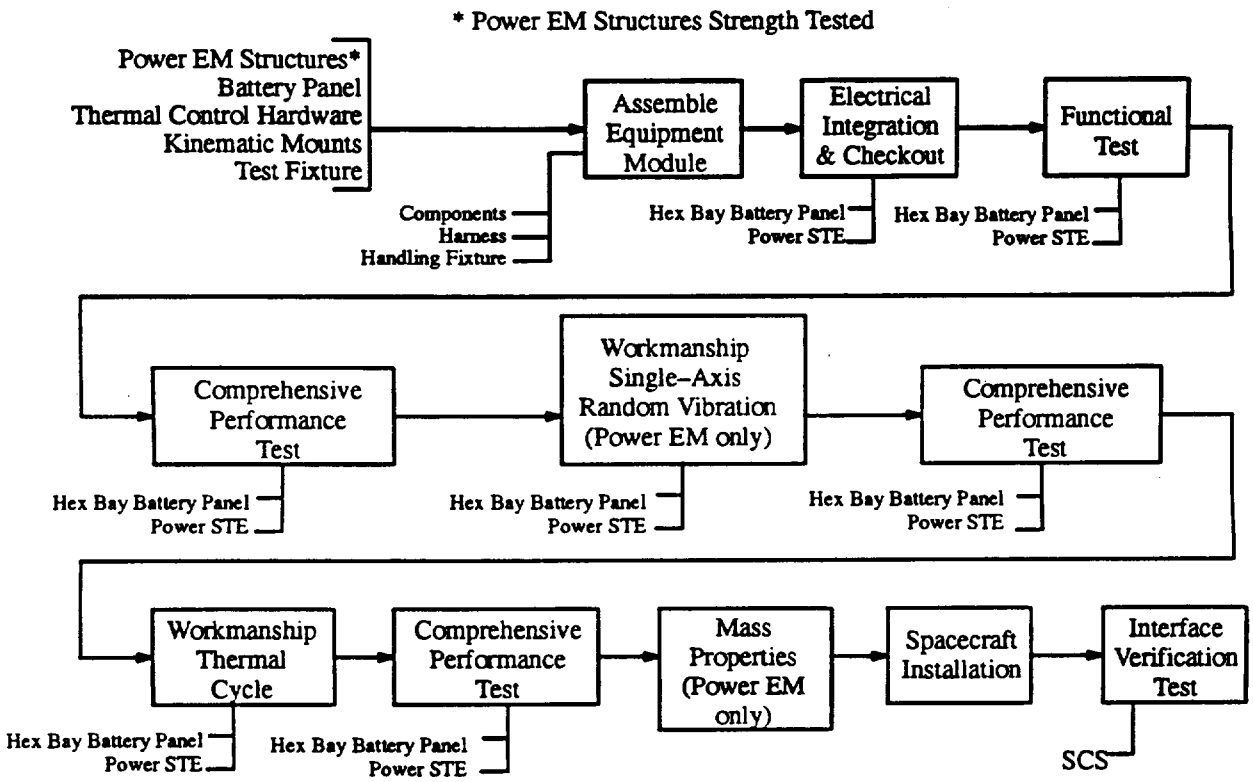

Figure 9. Power EM Integration and Test Flow

4.1.6.1 Electrical Integration and Checkout (EIC)

An EIC shall be performed to verify the proper input and grounding of power, commands, and signals prior to mating of flight hardware. The EIC shall also verify proper response to power, commands, and signal upon initial integration of flight hardware. The Power EM components shall be integrated with the appropriate panel in the following order:

–Z (PMAD) Panel	**–Y Panel**
a. Bus Data Unit	FSS Head
b. PDU	
c. BPC 1	
d. BPC 2	
e. HCE (5)	
f. FSS Electronics	
g. FDB	

The fine Sun sensor head is attached to the –Y panel after the EM is assembled.

4.1.6.2 Functional Test (FT)

A functional test of the Power EM shall be performed to test command and data paths between components and to exercise prime and redundant hardware.

4.1.6.3 Comprehensive Performance Test (CPT)

A CPT shall be performed to verify that the Power EM meets the performance requirements in all operational and contingency modes, as well as verifying all command and data paths and all redundant hardware.

4.1.6.4 Interface Verification Test (IVT)

An electrical IVT shall be performed to verify the proper EM interfaces to the Spacecraft Bus, including input and grounding of power, commands, and signals, prior to mating with the Spacecraft.

4.1.7 Formal Test Verification

Formal verification of the performance requirements are in the Verification Matrix, Attachment A. The Verification Matrix identifies the test method as specified herein and the level at which tests are conducted. The Power EM shall be tested according to the Comprehensive Test Plan for the EOS–AM Spacecraft (VRD–105), PN20008664, and the Power EM Test Plan, PN20001408.

4.2 Quality Conformance Inspections

The Power EM shall be exposed to verification conditions which represent those environments encountered throughout the ground phase and flight mission. The environmental conditions and levels of exposure are defined in the Verification Specification for the Earth Observing System (VRD–110), PS20005404, Section 4. There are four methods which my be used individually or in combination to verify each requirement in Section 3. These methods, defined as inspection (I), analysis (A), demonstration (D), and test (T), are defined in the Verification Specification for the Earth Observing System (VRD–110), PS20005404, Section 4.

4.2.1 Method of Verification

4.2.1.1 Inspection

Inspection may be used to verify design and construction requirements, drawing compliance, or specific physical dimensions of the equipment module. Inspection is a method of verification of physical characteristics that determines compliance without the use special laboratory equipment, procedures, test support items, or services. Inspection uses standard methods such as visual gauges, etc., to verify compliance with requirements. Inspection also includes the review of design documents, material lists, code, plans, etc., to verify that requirements have been met.

4.2.1.2 Analysis

Analytical techniques may be used, in lieu of testing, to verify compliance to specified requirements, either alone or in combination with test. The selected techniques may include, typically, system engineering analysis, statistics, qualitative analysis, analog modeling, and computer simulation.

4.2.1.3 Demonstration

Demonstration is a qualitative method of verification that evaluates the properties of the subject equipment by observation. Demonstration is used with or without special test equipment or instrumentation to verify required characteristics such as operational functioning human engineering features, service and access features, transportability, and displayed data.

4.2.1.4 Test

Test is a quantitative method of verification wherein performance requirements are verified by measurement during and after the controlled application of functional and environmental stimuli. These measurements may require the use of laboratory equipment, recorded data, procedures, test support items, or services.

4.2.1.5 Classification of Characteristics

Classification of characteristics as critical, major or minor, shall be as defined in MIL-STD-109.

4.2.1.6 Test Equipment

[1] Existing test equipment shall be used wherever practical.

[2] Where new test equipment is required to test units which are physically or functionally identical or similar, the equipment shall be designed to perform its task(s) on each element of that group, where practical.

4.2.1.6.1 Test Equipment Safety Features

[1] Test equipment shall incorporate any safety interlocks or other safety features necessary to reduce the introduction of safety hazards by the test equipment.

[2] Any safety feature included in any Spacecraft test equipment shall give a visual, auditory, or electronic indication of activation when its its activated.

4.2.1.6.2 Test Equipment Verification

Unless otherwise specified herein, test equipment used to measure Power EM performance characteristics shall be capable of demonstrating that

a. it will not impose environments on the tested item(s) beyond the levels called for in the Verification Specification, PS20005404, and

b. it is capable of imposing the test levels called for in the Verification Specification, PS20005404.

c. it is capable of meeting all the requirements imposed on it by the Ground Support Equipment Requirements Document, 20001430 (GSERD).

4.2.1.6.3 Test Equipment Calibration

[1] Power EM Test equipment shall be calibrated in accordance with the Performance Assurance Implementation Plan, 20005397.

(This page intentionally left blank.)

5 PREPARATION FOR DELIVERY

5.1 General

Interior and exterior shipping containers shall be marked in accordance with the Subcontractor Performance Assurance Requirements, 20004280.

(This page intentionally left blank.)

6 NOTES

6.1 Definitions

None

6.2 Abbreviations and Acronyms

BDU	Bus Data Unit
BEP	Battery Enable Plug
BPC	Battery Power Converter
BPM	Battery Pressure Monitor
CCHP	Capillary Cooled Heat Pipe
C&DH	Command and Data Handling
CDR	Critical Design Review
CEI	Contract End Item
CPT	Comprehensive Performance Test
EAS	Electrical Accommodation Subsystem
EGSE	Electrical Ground Support Equipment
EED	Electro–explosive Device
EIC	Electrical Integration and Checkout
EM	Equipment Module
EMC	Electromagnetic Compatibility
EMI	Electromagnetic Interference
EOS	Earth Observing System
EPC	Electrical Power Converter
EPS	Electrical Power Subsystem
ESE	Earth Sensor Electronics
EU	Electronics Unit
FDB	Fuse Distribution Board
FSS	Fine Sun Sensor
GN&C	Guidance, Navigation, and Control
HCE	Heater Control Electronics
I&T	Integration and Test

IVT	Interface Verification Test
KM	Kinematic Mount
PAIP	Performance Assurance Implementation Plan
PAML	Program Approved Materials and Process List
PAPL	Program Approved Parts List
PMAD	Power Management and Distribution
PMCS	Power Monitoring and Control Software
PDR	Preliminary Design Review
PDU	Power Distribution Unit
PWM	Pulse Width Modulation
SCS	Spacecraft Checkout Station
SMS	Structures and Mechanisms Subsystem
SSU	Sequential Shunt Unit
STE	Special Test Equipment
TCS	Thermal Control Subsystem

6.3 Exceptions to the GIS and GIIS.

None

6.4 Requirements Traceability Matrix

Requirements shown in Section 3 of this specification were derived from the source documents, PS20005396, Contact End Item Specification (CEI). Compliance to the requirements are shown in the Requirements Traceability Matrix, Attachment B (provided under separate cover).

APPENDIX I

10 POWER EM TEST POINTS

Test Point Name	EM Internal Routing	Test Level
PDU Mode Controller Reference Test Point	PDU to EM Test Conn	EM,SC
PDU Mode Controller A Fail Stim Test Input	PDU to EM Test Conn	EM,SC
PDU Mode Controller B Fail Stim Test Input	PDU to EM Test Conn	EM,SC
PDU mode Controller C Fail Stim Test Input	PDU to EM Test Conn	EM,SC
PDU Shunt Drive A Fail Stim Test Input	PDU to EM Test Conn	SC
PDU Shunt Drive B Fail Stim Test Input	PDU to EM Test Conn	SC
PDU Shunt Drive C Fail Stim Test Input	PDU to EM Test Conn	SC
PDU Shunt Drive Reference Ground Test Point	PDU to EM Test Conn	SC
Primary Power Reference Test Point	PDU to EM Test Conn	EM,SC
External Power Safety Ground Test Point	PDU to EM Test Conn	LP
120 Volt Bus Test Point	PDU to EM Test Conn	EM,SC
PDU Load Feed Redun Fuse Test Points (60x2)	PDU to EM Test Conn	EM,SC
PDU Batt 1 Feed Redun Fuse Test Points (4x2)	PDU to EM Test Conn	EM,SC
PDU Batt 2 Feed Redun Fuse Test Points (4x2)	PDU to EM Test Conn	EM,SC
Battery 1 Double Insulation Test Points (2)	EM Bat 1 to GSE Bat1Conn1	EM,SC
120 Volt Bus Test Points (2)	EM Bat 1 to GSE Bat1Conn2	EM,SC
Primary Power Reference Test Points (2)	EM Bat 1 to GSE Bat1Conn2	EM,SC
120 Volt Bus Double Insulation Test Points (4)	EM Bat 1 to GSE Bat1Conn2	EM,SC
Housekeeping Load Current Test Point	EM Bat 1 to GSE Bat1Conn2	EM,SC
Instrument Load Current Test Point	EM Bat 1 to GSE Bat1Conn2	EM,SC
Battery 1 Return Test Point	EM Bat 1 to GSE Bat1Conn2	EM,SC
Battery 1 Volts Test Point	EM Bat 1 to GSE Bat1Conn2	EM,SC

(This page intentionally left blank.)

APPENDIX II

20 ELECTRICAL CONNECTOR CONTACT ASSIGNMENTS

POWER EM S/C INTERFACE CONNECTOR PANEL LIST

Connector Designations: PX1J01 Part Number: 20038047PJ1C98A		Connector Function: Bat 1 & 2 Pyro A Connector Type: 10 pin circular	
Contact Number	Function Name	Circuit Category	Destination/Source
(TBS–1)	(TBS–1)	(TBS–1)	(TBS–1)
Connector Designations: PX1J02 Part Number: 20038047PJ1C98N		Connector Function: Bat 1 & 2 Pyro B Connector Type: 10 pin circular	
Contact Number	Function Name	Circuit Category	Destination/Source
(TBS–1)	(TBS–1)	(TBS–1)	(TBS–1)
Connector Designations: PX1J03 Part Number: 20038047PJ1E26N		Connector Function: Bat 1 & 2 Umb Pwr Connector Type: 26 pin circular	
Contact Number	Function Name	Circuit Category	Destination/Source
(TBS–1)	(TBS–1)	(TBS–1)	(TBS–1)
Connector Designations: PX1J04 Part Number: 20038047PJ1E35N		Connector Function: Bat 1 & 2 Umb C&T Connector Type: 55 pin circular	
Contact Number	Function Name	Circuit Category	Destination/Source
(TBS–1)	(TBS–1)	(TBS–1)	(TBS–1)
Connector Designations: PX1J05 Part Number: 20038047PJ1H55N		Connector Function: SAD 1A, 1B Connector Type: 55 pin circular	
Contact Number	Function Name	Circuit Category	Destination/Source
(TBS–1)	(TBS–1)	(TBS–1)	(TBS–1)
Connector Designations: PX1J06 Part Number: 20039047PJ1H55A		Connector Function: SAD 1C, 1D Connector Type: 55 pin circular	
Contact Number	Function Name	Circuit Category	Destination/Source
(TBS–1)	(TBS–1)	(TBS–1)	(TBS–1)
Connector Designations: PX1J07 Part Number: 20038047PJ1H55B		Connector Function: SAD 1E, 1F Connector Type: 55 pin circular	
Contact Number	Function Name	Circuit Category	Destination/Source
(TBS–1)	(TBS–1)	(TBS–1)	(TBS–1)

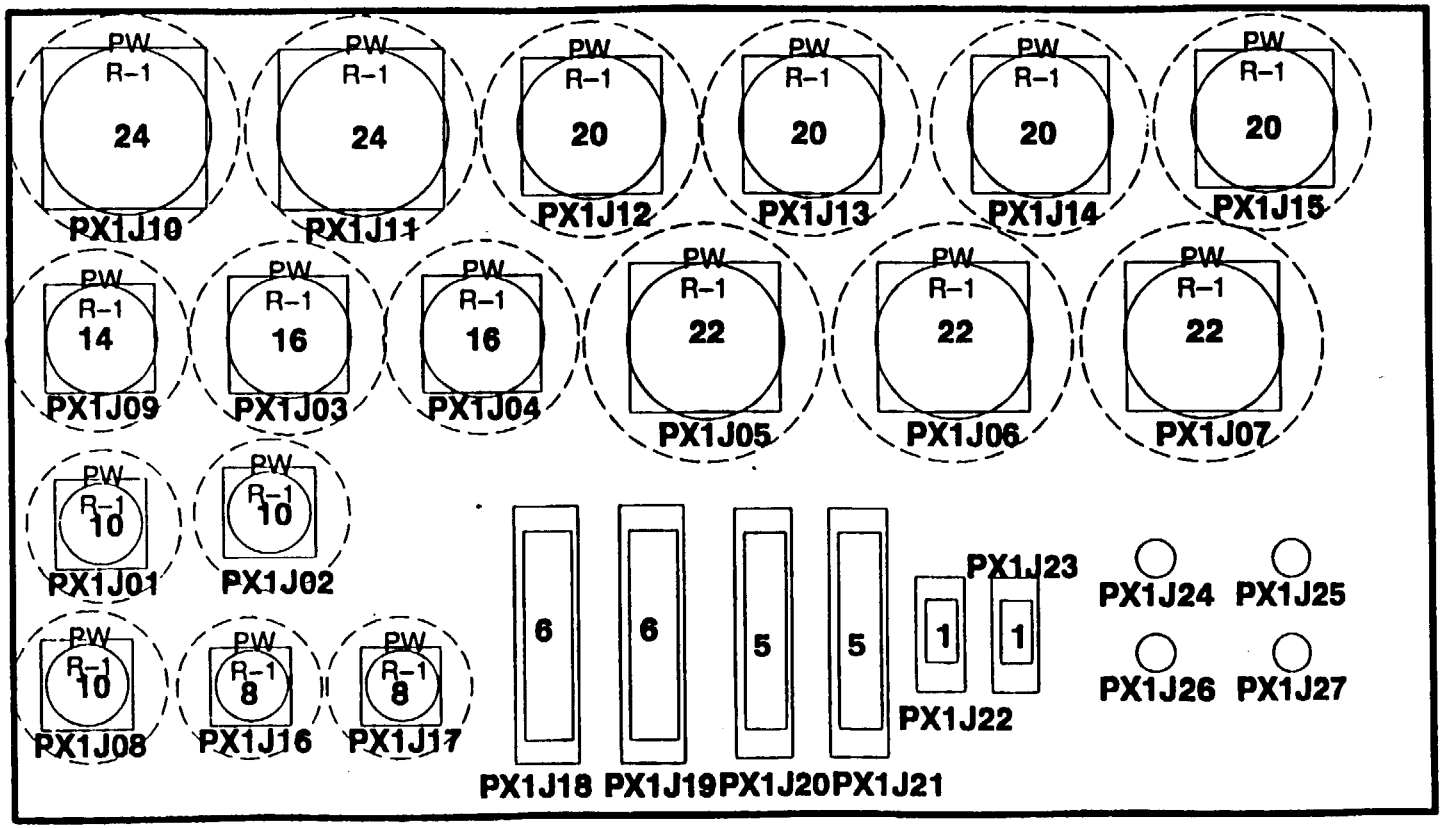

Figure 10. Power EM S/C Interface Connector Panel Layout

POWER EM S/C INTERFACE CONNECTOR PANEL LIST (Continued)

Connector Designations: PX1J08 Part Number: 20034844PJ1B98B		Connector Function: DEU 1 kW Connector Type: 6 pin circular	
Contact Number	Function Name	Circuit Category	Destination/Source
(TBS–1)	(TBS–1)	(TBS–1)	(TBS–1)
Connector Designations: PX1J09 Part Number: 20034844PJ1D18N		Connector Function: 6 kW Test Connector Type: 18 pin circular	
Contact Number	Function Name	Circuit Category	Destination/Source
(TBS–1)	(TBS–1)	(TBS–1)	(TBS–1)
Connector Designations: PX1J10 Part Number: 20038047PJ1J61N		Connector Function: Instr. Pwr Connector Type: 61 pin circular	
Contact Number	Function Name	Circuit Category	Destination/Source
(TBS–1)	(TBS–1)	(TBS–1)	(TBS–1)
Connector Designations: PX1J11 Part Number: 20038047PJ1J61A		Connector Function: Instr. Pwr Connector Type: 61 pin circular	
Contact Number	Function Name	Circuit Category	Destination/Source
(TBS–1)	(TBS–1)	(TBS–1)	(TBS–1)
Connector Designations: PX1J12 Part Number: 20038047PJ1G41N		Connector Function: EM Pwr A Connector Type: 41 pin circular	
Contact Number	Function Name	Circuit Category	Destination/Source
(TBS–1)	(TBS–1)	(TBS–1)	(TBS–1)
Connector Designations: PX1J13 Part Number: 20038047PJ1G41A		Connector Function: EM Pwr A Connector Type: 41 pin circular	
Contact Number	Function Name	Circuit Category	Destination/Source
(TBS–1)	(TBS–1)	(TBS–1)	(TBS–1)
Connector Designations: PX1J14 Part Number: 20038047PJ1G41B		Connector Function: EM Pwr B Connector Type: 41 pin circular	
Contact Number	Function Name	Circuit Category	Destination/Source
(TBS–1)	(TBS–1)	(TBS–1)	(TBS–1)
Connector Designations: PX1J15 Part Number: 20038047PJ1G41C		Connector Function: EM Pwr B Connector Type: 41 pin circular	
Contact Number	Function Name	Circuit Category	Destination/Source
(TBS–1)	(TBS–1)	(TBS–1)	(TBS–1)

POWER EM S/C INTERFACE CONNECTOR PANEL LIST (Continued)

Connector Designations: PX1J16 Part Number: 20038047PJ1A35N		Connector Function: 28V to FSSE Connector Type: 6 pin circular	
Contact Number	Function Name	Circuit Category	Destination/Source
(TBS–1)	(TBS–1)	(TBS–1)	(TBS–1)
Connector Designations: PX1J17 Part Number: 20038047PJ1A35A		Connector Function: 28V to FSSE Connector Type: 6 pin circular	
Contact Number	Function Name	Circuit Category	Destination/Source
(TBS–1)	(TBS–1)	(TBS–1)	(TBS–1)
Connector Designations: PX1J18 Part Number: 20042415P1104PB		Connector Function: Connector Type: 104 pin rectangular	
Contact Number	Function Name	Circuit Category	Destination/Source
(TBS–1)	(TBS–1)	(TBS–1)	(TBS–1)
Connector Designations: PX1J19 Part Number: 20042415P1104PB		Connector Function: Connector Type: 104 pin rectangular	
Contact Number	Function Name	Circuit Category	Destination/Source
(TBS–1)	(TBS–1)	(TBS–1)	(TBS–1)
Connector Designations: PX1J20 Part Number: 20042415P1050PA		Connector Function: Connector Type: 50 pin rectangular	
Contact Number	Function Name	Circuit Category	Destination/Source
(TBS–1)	(TBS–1)	(TBS–1)	(TBS–1)
Connector Designations: PX1J21 Part Number: 20042415P1050PA		Connector Function: Connector Type: 50 pin rectangular	
Contact Number	Function Name	Circuit Category	Destination/Source
(TBS–1)	(TBS–1)	(TBS–1)	(TBS–1)
Connector Designations: PX1J22 Part Number: 20042415P1009PA		Connector Function: HD Cmd Connector Type: 9 pin rectangular	
Contact Number	Function Name	Circuit Category	Destination/Source
(TBS–1)	(TBS–1)	(TBS–1)	(TBS–1)
Connector Designations: PX1J23 Part Number: 20042415P1009PA		Connector Function: HD Cmd Connector Type: 9 pin rectangular	
Contact Number	Function Name	Circuit Category	Destination/Source
(TBS–1)	(TBS–1)	(TBS–1)	(TBS–1)

POWER EM S/C INTERFACE CONNECTOR PANEL LIST (Continued)

Connector Designations: PX1J24 Part Number: 20040889P1		Connector Function: C&T Bus 1 Connector Type: triax (1553)	
Contact Number	Function Name	Circuit Category	Destination/Source
(TBS–1)	(TBS–1)	(TBS–1)	(TBS–1)
Connector Designations: PX1J125 Part Number: 20040889P1		Connector Function: C&T Bus 1 Connector Type: triax (1553)	
Contact Number	Function Name	Circuit Category	Destination/Source
(TBS–1)	(TBS–1)	(TBS–1)	(TBS–1)
Connector Designations: PX1J26 Part Number: 20040889P1		Connector Function: C&T Bus 2 Connector Type: triax (1553)	
Contact Number	Function Name	Circuit Category	Destination/Source
(TBS–1)	(TBS–1)	(TBS–1)	(TBS–1)
Connector Designations: PX1J27 Part Number: 20040889P1		Connector Function: C&T Bus 2 Connector Type: triax (1553)	
Contact Number	Function Name	Circuit Category	Destination/Source
(TBS–1)	(TBS–1)	(TBS–1)	(TBS–1)

BATTERY PRE–ENABLE CONNECTOR PANEL LIST

Connector Designations: BEJ01 Part Number: 20038047PJ1G41B		Connector Function: Battery Enable Ch 1 Connector Type: 41 pin circular	
Contact Number	Function Name	Circuit Category	Destination/Source
(TBS–1)	(TBS–1)	(TBS–1)	(TBS–1)
Connector Designations: BEJ02 Part Number: 20038047PJ1G41N		Connector Function: Battery Enable Ch 2 Connector Type: 41 pin circular	
Contact Number	Function Name	Circuit Category	Destination/Source
(TBS–1)	(TBS–1)	(TBS–1)	(TBS–1)
Connector Designations: BEJ03 Part Number: 20038047PJ1G41B		Connector Function: Battery Enable Ch 3 Connector Type: 41 pin circular	
Contact Number	Function Name	Circuit Category	Destination/Source
(TBS–1)	(TBS–1)	(TBS–1)	(TBS–1)

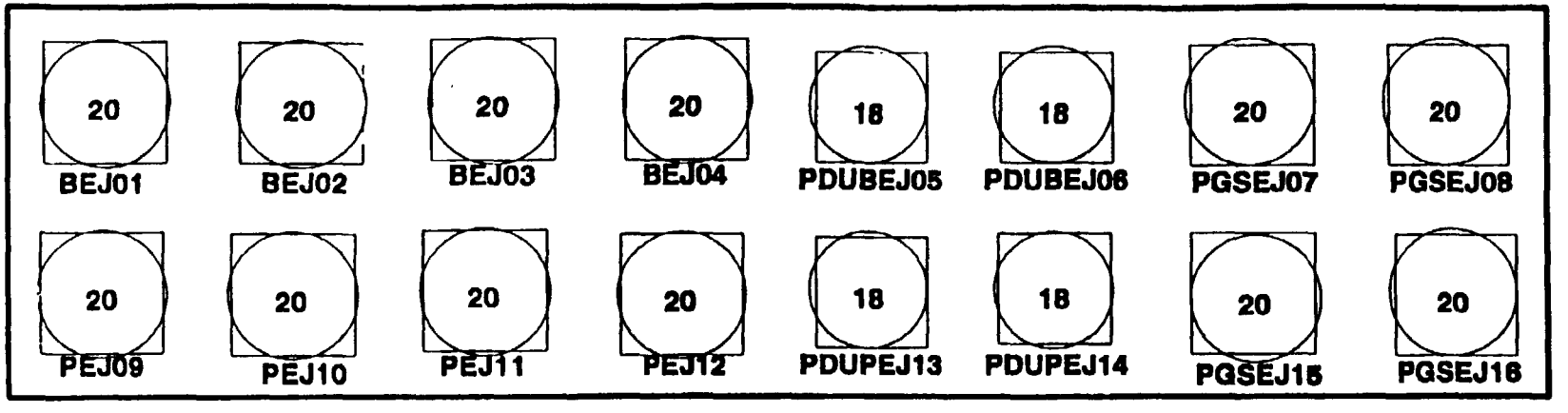

BEJ1 Battery Enable Channel 1
BEJ2 Battery Enable Channel 2
BEJ3 Battery Enable Channel 3
BEJ4 Battery Enable Channel 4
PDUBEJ5 PDU Enable,Primary
PDUBEJ6 PDU Enable,Redundant
PGSEJ7 GSE Interface
PGSEJ8 GSE Interface

PEJ9 Battery Pre–Enable Channel 1
PEJ10 Battery Pre–Enable Channel 2
PEJ11 Battery Pre–Enable Channel 3
PEJ12 Battery Pre–Enable Channel 4
PDUPEJ13 PDU Pre–Enable,Primary
PDUPEJ14 PDU Pre–Enable,Redundant
PGSEJ15 GSE Interface
PGSEJ16 GSE Interface

Figuare 11. Battery/Pre–Enable Panel

BATTERY PRE–ENABLE CONNECTOR PANEL LIST (Continued)

Connector Designations: BEJ04 Part Number: 20038047PJ1G41N		Connector Function: Battery Enable Ch 4 Connector Type: 41 pin circular	
Contact Number	Function Name	Circuit Category	Destination/Source
(TBS–1)	(TBS–1)	(TBS–1)	(TBS–1)
Connector Designations: PDUBEJ05 Part Number: 20038047PJ1F35N		Connector Function: PDU Enable, Primary Connector Type: 66 pin circular	
Contact Number	Function Name	Circuit Category	Destination/Source
(TBS–1)	(TBS–1)	(TBS–1)	(TBS–1)
Connector Designations: PDUBEJ06 Part Number: 20038047PJ1F35A		Connector Function: PDU Enable, Redund Connector Type: 66 pin circular	
Contact Number	Function Name	Circuit Category	Destination/Source
(TBS–1)	(TBS–1)	(TBS–1)	(TBS–1)
Connector Designations: PGSEJ07 Part Number: 20038047PJ1G41N		Connector Function: GSE Interface Connector Type: 41 pin circular	
Contact Number	Function Name	Circuit Category	Destination/Source
(TBS–1)	(TBS–1)	(TBS–1)	(TBS–1)
Connector Designations: PGSEJ08 Part Number: 20038047PJ1G41A		Connector Function: GSE Interface Connector Type: 41 pin circular	
Contact Number	Function Name	Circuit Category	Destination/Source
(TBS–1)	(TBS–1)	(TBS–1)	(TBS–1)
Connector Designations: PEJ09 Part Number: 20038047PJ1G41C		Connector Function: Battery Pre–En Ch 1 Connector Type: 41 pin circular	
Contact Number	Function Name	Circuit Category	Destination/Source
(TBS–1)	(TBS–1)	(TBS–1)	(TBS–1)
Connector Designations: PEJ10 Part Number: 20038047PJ1G41A		Connector Function: Battery Pre–En Ch 2 Connector Type: 41 pin circular	
Contact Number	Function Name	Circuit Category	Destination/Source
(TBS–1)	(TBS–1)	(TBS–1)	(TBS–1)
Connector Designations: PEJ11 Part Number: 20038047PJ1G41C		Connector Function: Battery Pre–En Ch 3 Connector Type: 41 pin circular	
Contact Number	Function Name	Circuit Category	Destination/Source
(TBS–1)	(TBS–1)	(TBS–1)	(TBS–1)

BATTERY PRE-ENABLE CONNECTOR PANEL LIST (Continued)

Connector Designations: PEJ12 Part Number: 20038047PJ1G41A		Connector Function: Battery Pre-En Ch 4 Connector Type: 41 pin circular	
Contact Number	Function Name	Circuit Category	Destination/Source
(TBS-1)	(TBS-1)	(TBS-1)	(TBS-1)
Connector Designations: PDUPEJ13 Part Number: 20038047PJ1F35B		Connector Function: PDU Pre-En Primary Connector Type: 66 pin circular	
Contact Number	Function Name	Circuit Category	Destination/Source
(TBS-1)	(TBS-1)	(TBS-1)	(TBS-1)
Connector Designations: PDUPEJ14 Part Number: 20038047PJ1F35C		Connector Function: PDU Pre-En Redund Connector Type: 66 pin circular	
Contact Number	Function Name	Circuit Category	Destination/Source
(TBS-1)	(TBS-1)	(TBS-1)	(TBS-1)
Connector Designations: PGSEJ15 Part Number: 20038047PJ1G41B		Connector Function: GSE Interface Connector Type: 41 pin circular	
Contact Number	Function Name	Circuit Category	Destination/Source
(TBS-1)	(TBS-1)	(TBS-1)	(TBS-1)
Connector Designations: PGSEJ16 Part Number: 20038047PJ1G41C		Connector Function: GSE Interface Connector Type: 41 pin circular	
Contact Number	Function Name	Circuit Category	Destination/Source
(TBS-1)	(TBS-1)	(TBS-1)	(TBS-1)

Performance Specification Recorder Equipment Module for EOS–AM Spacecraft (SP–801)

PS20008745
CAGE No. 49671
05 August 1993

Performance Specification Communications/Command and Data Handling Equipment Module for EOS–AM Spacecraft (SP–801)

Prepared under:
Contract NAS5–32500
NASA Goddard Space Flight Center
Greenbelt, Maryland 20771

Prepared by:
Martin Marietta Corporation
Astro Space
P.O. Box 800
Princeton, New Jersey 08543–0800

DCC080593

(This page intentionally left blank.)

REVISION LOG

This log identifies those portions of this document which have been revised since the original issue. Revised portions of each page, for the current revision only, are identified by marginal striping.

Revision	Paragraph Number(s) Affected	Rev. Date	Approval
Initial Issue		08/05/93	CM/GSR

(This page intentionally left blank.)

TABLE OF CONTENTS

SECTION / PARAGRAPH	TITLE	PAGE
1	SCOPE	1
1.1	Identification	1
2	APPLICABLE DOCUMENTS	3
2.1	Government Documents	3
2.1.1	Military	3
2.1.2	NASA	3
2.2	Non-Government Documents	4
2.2.1	Martin Marietta Astro Space Documents	4
2.2.1.1	Specifications	4
2.2.1.2	Standards	5
2.2.1.3	Drawings	6
2.2.1.4	Other Publications	6
3	REQUIREMENTS	9
3.1	Critical Item Definition	9
3.1.1	COMM/C&DH Equipment Module Description	10
3.1.2	Interface Definition	11
3.1.2.1	Electrical Interfaces	11
3.1.2.2	Mechanical Interface	23
3.1.2.3	Thermal Interface	23
3.1.3	Major Component List	24
3.2	Characteristics	25
3.2.1	Performance	25
3.2.1.1	Command Reception and Distribution	25
3.2.1.2	Telemetry Collection, Formatting and Distribution	25
3.2.1.3	Ancillary Data	25
3.2.1.4	Bus Utilization	25
3.2.1.5	EM Computing Resources	25
3.2.1.6	Time Distribution and Synchronization Services	25

TABLE OF CONTENTS (Continued)

SECTION / PARAGRAPH	TITLE	PAGE
3.2.1.7	Science Data Handling	25
3.2.1.8	Solar Array Drive Control	26
3.2.1.9	Communications Requirements	26
3.2.1.10	Navigation and Tracking	26
3.2.2	Physical Characteristics	27
3.2.2.1	Mass	27
3.2.2.2	Power Consumption and Thermal Dissipation	27
3.2.2.3	Dimension	27
3.2.2.4	Transport and Storage	27
3.2.2.5	Integration and Test	27
3.2.2.6	Layout	29
3.2.2.7	Configuration	29
3.2.2.8	Natural Frequency	29
3.2.3	Reliability	30
3.2.4	Durability	30
3.2.5	Maintainability	30
3.2.6	Environmental Conditions	30
3.2.6.1	General	30
3.2.6.2	Sine Vibration	30
3.2.6.3	Contamination	30
3.2.7	Transportability	30
3.3	Design and Construction	31
3.3.1	Materials, Parts, and Processes	31
3.3.2	Electric Fields	31
3.3.3	Magnetic Fields	31
3.3.4	Nameplates and Product Marking	31
3.3.5	Workmanship	32
3.3.6	Safety	32
3.3.7	Human Performance/Human Engineering	33
3.4	Documentation	33

TABLE OF CONTENTS (Continued)

SECTION / PARAGRAPH	TITLE	PAGE
3.4.1	Specifications	33
3.4.2	Drawings	33
3.4.3	Test Plans and Procedures	33
3.5	Precedence	33
4	QUALITY ASSURANCE PROVISIONS	35
4.1	General	35
4.1.1	Responsibility for Tests	35
4.1.2	Special Tests and Examinations	35
4.1.3	Reliability Test	35
4.1.4	Engineering Evaluation and Test	35
4.1.5	Protoflight Test	35
4.1.6	Installation Test and Checkout	36
4.1.6.1	Electrical Integration and Checkout (EIC)	36
4.1.6.2	Functional Test (FT)	37
4.1.6.3	Comprehensive Performance Test (CPT)	37
4.1.6.4	Interface Verification Test	37
4.1.7	Formal Test Verification	37
4.2	Quality Conformance Inspections	37
4.2.1	Method of Verification	38
4.2.1.1	Inspection	38
4.2.1.2	Analysis	38
4.2.1.3	Demonstration	38
4.2.1.4	Test	38
4.2.1.5	Classification of Characteristics	38
4.2.1.6	Test Equipment	38
5	PREPARATION FOR DELIVERY	41
5.1	General	41
6	NOTES	43

TABLE OF CONTENTS (Continued)

SECTION / PARAGRAPH	TITLE	PAGE
6.1	Definitions	43
6.2	Abbreviations and Acronyms	43
6.3	Exceptions to the GIS and GIIS	45
6.4	Requirements Traceability Matrix	45

APPENDIX I

10	ELECTRICAL CONNECTOR CONTACT ASSIGNMENTS	47

LIST OF FIGURES

FIGURE	TITLE	PAGE
1	Isometric Diagram of the COMM/C&DH EM	10
2	COMM/C&DH Equipment Module (EM) Block Diagram	12
3	Power Distribution in the COMM/C&DH Equipment Module	13
4	Command/Telemetry Bus Connections	14
5	Time Mark and Frequency Bus Connections	16
6	CTIU to S–Band Transponder (SBT) Interface	17
7	S–Band Transponder (SBT) to CTIU Interface	18
8	Master Oscillator Connections to the CTIU, SBT and DAS and KSA Modulators	19
9	SAD and ACE Interfaces	20
10	SSR Interface Connections	21
11	CTIU Discrete Command Connections	22
12	COMM/C&DH EM Integration And Test Flow	36
13	Comm/C&DH EM Interface Bracket	48

LIST OF TABLES

TABLE	TITLE	PAGE
I	COMM/C&DH EM Subsystem Functions	9
II	Command and Telemetry Bus RT Address Assignments	15
III	C&DH/COMM Module Components	24
IV	Power Consumption and Thermal Dissipation [Watts]	28

TBD LOG

ITEM	SECTION	PAGE	SUBJECT	RESP.	DUE
TBD–1	3.2.2.5	29	EM Ground Cooling Method	C.Scott/E. Shade	12/30/93
TBD–2	Appx I	47	Circuit Categories	S. Holaday	9/30/93
TBD–3	Appx I	52	CX1J18 Part Number	S. Dukes	9/30/93
TBD–4	Appx I	52	CX1J19 Part Number	S. Dukes	9/30/93

TBR LOG

ITEM	SECTION	PAGE	SUBJECT	RESP.	DUE
TBR–1	Table IV	28	EM Heater Power by Operational Mode	C. Scott	12/3/93
TBR–2	Appx I	47	Contact Number Assignments	S. Holaday	3/31/94

1 SCOPE

1.1 Identification

This specification establishes the performance, design, development, and test requirements for the Communications/Command and Data Handling (COMM/C&DH) Equipment Module (EM) critical item. The Comm/C&DH EM shall meet all the applicable requirements of the Contract End Item (CEI) Specification for the EOS–AM Spacecraft, PS20005396 (SEP-101), throughout its design life. The principal requirement of modularity to facilitate Spacecraft construction, maintenance and serviceability is satisfied by this module design. The equipment module will be designed to facilitate producibility, integration, and accessibility to the internal components while minimizing weight. The equipment module will be modular to allow on-ground removal and replacement onto the Spacecraft core.

(This page intentionally left blank.)

2 APPLICABLE DOCUMENTS

The following documents of the exact issue shown, form a part of this specification to the extent specified herein. In the event of conflict between the documents referenced herein and the contents of this specification, the contents of this specification shall take precedence, except as defined in Section 3.6 herein.

2.1 Government Documents

The following documents of the exact issue shown, form a part of this specification to the extent specified herein. In the event of conflict between the documents referenced herein and the contents of this specification, the contents of this specification shall take precedence, except as defined in Section 3.6 herein.

2.1.1 Military

MSFC–SPEC–522	Design Criteria for Controlling Stress Corrosion
MIL–STD–490 30 October 1968 NOTICE 1 – 1 February 1969 NOTICE 2 – 18 May 1972	Specification Practices
MIL–STD–889 (Rev. B) 4 March 1988	Dissimilar Metals
MIL–STD–1472 (Rev. D) 20 March 1991	Human Engineering Design Criteria for Military Systems, Equipment, and Facilities
MIL–STD–1553 (Rev. B) 8 September 1986	Digital Time Division Command/Response Multiplex Data Bus
MIL–STD–109	Classification of Characteristics
WSMCR–127–1 December 1989	Western Space and Missile Center Range Safety Regulations
MIL–HDBK–5	Military Handbook, Metallic Materials and Elements for Aerospace Vehicle Structures
MIL–HDBK–17	Military Handbook, Plastics for Aerospace Vehicles

2.1.2 NASA

420–03–02 1 December 1992	General Instrument Interface Specification (GIIS),

420–05–02 8 November 1991	Performance Assurance Requirements for the EOS Observatories (PAR)
421–10–01 1 May 1992	Requirements Document for the EOS–AM Spacecraft (RD)
NHB 5300.4 (3A–1) December 1976	Requirements for Soldered Electrical Connections
NHB 5300.4 (3G) April 1985	Requirements for Interconnecting Cables, Harnesses, and Wiring
NHB 5300.4 (3H) May 1984	Requirements for Crimping and Wire Wrap
NHB 5300.4 (3I) May 1984	Requirements for Printed Wiring Boards
NHB 5300.4 (3J) April 1985	Requirements for Conformal Coating and Staking of Printed Wiring Boards and Electronic Assemblies
NHB 5300.4 (3K) April 1985	Design Requirements for Rigid Printed Wiring Boards and Assemblies

2.2 Non-Government Documents

Unless otherwise specified, the following documents of the latest issue form a part of this specification to the extent specified herein. In the event of conflict between the documents referenced herein and the contents of this specification, the contents of this specification shall be considered a superseding requirement, except for higher tier documents.

2.2.1 Martin Marietta Astro Space Documents

2.2.1.1 Specifications

IS20008501	General Interface Specification for the EOS Spacecraft (ICD–101)
PS20001415	Structures and Mechanisms Subsystem Specification
PS20004749	Electrical Power Subsystem Performance Specification
PS20005396	EOS–AM Spacecraft Contract End Item Specification (SEP–101)
PS20005404	Verification Specification for the Earth Observing System (VRD–110)

PS20008543	Performance Specification for the Master Oscillator
PS20008549	Thermal Control Subsystem Specification
PS20008550	Performance Specification for the Heater Control Electronics
PS20008567	Command and Data Handling Subsystem Performance Specification
PS20008568	Performance Specification for the Bus Data Unit
PS20008569	Performance Specification for the Command/ Telemetry Interface Unit
PS20008570	Performance Specification for the Spacecraft Controls Computer
PS20008580	Communications Subsystem Specification for the EOS–AM Spacecraft
PS20008584	Performance Specification for the S–band Transponder
PS20008586	Performance Specification for the S–band Interface Unit
PS20008602	Performance Specification for the Array Drive Electronics
PS20008636	Electrical Accommodations Subsystem Specification
PS20008694	Performance Specification for the Fuse and Distribution Box
PN20001412	EOS–AM Spacecraft Contamination Control Plan (SEP–107)
20001430	Ground Support Equipment Requirements Document (SEP–104)
PN20005397	EOS Performance Assurance Implementation Plan (PAIP) (PA–100)
Source:	Martin Marietta Astro Space P. O. Box 800 Princeton, NJ 08543–0800

2.2.1.2 Standards

S32534, Rev. E	Identification Marking

2.2.1.3 Drawings

20008745	COMM/C&DH Equipment Module Assembly Drawing
ICD20008745	Interface Control Drawing, COMM/C&DH Equipment Module
Source:	Martin Marietta Astro Space P. O. Box 800 Princeton, NJ 08543–0800

2.2.1.4 Other Publications

20008536	EOS–AM Spacecraft Specification Tree
20008540	Logistics Plan
PN20005869	Electromagnetic Compatibility Control Plan (SEP–106)
PL20008648	Program Approved Parts List (PA–325)
PL20008650	Program Approved Materials and Processes List (PA–460)
PN20005397	Performance Assurance Implementation Plan (PAIP)
PN20005404	Verification Plan for the Earth Observing System (VRD–110)
PN20008664	Comprehensive Test Plan for the EOS–AM (VRD–105)
PN20008745	Command & Data Handling/Communications Equipment Module Test Plan
Source:	Martin Marietta Astro Space P. O. Box 800 Princeton, NJ 08543–0800
EIA Std. RS–422	Electrical Characteristics of Balanced Voltage Digital Interface Circuits
Source:	Electronic Industries Associates Engineering Department 2001 Eye Street N.W. Washington, D.C. 20006

CCSDS 201.0–B–1 1987	Recommendations for Telecommand, Part 1, January Channel Service
CCSDS 202.0–B–1 1987	Recommendations for Telecommand, Part 2, January Data Routing Service
CCSDS 203.0–B–1 1987	Recommendations for Telecommand, Part 3, January Data Management Service
CCSDS 301.0–B–1 January 1987	Recommendations for Time Code Formats
CCSDS 700.0–G–2 October 1989	Recommendations for Advanced Orbiting Systems. Networks, and Data Links: Summary of Concept, Rationale and Performance
CCSDS 701.0–B–1 Issue 1, October 1989	Recommendations for Advanced Orbiting Systems. Networks, and Data Links:
Source:	CCSDS Secretariat Communications and Data Systems Div. (Code–TS) National Aeronautics and Space Administration Washington, D.C. 20546

(This page intentionally left blank.)

3 REQUIREMENTS

The Communications/Command and Data Handling Equipment Module (COMM/C&DH EM) shall meet all performance requirements specified herein under all combinations of environmental conditions and input signals described and after exposure to the launch environment described herein. All requirements are end-of-life (EOL) specifications unless stated otherwise.

3.1 Critical Item Definition

The COMM/C&DH EM contains elements of several Spacecraft subsystems. These subsystems and their major functions performed within the Equipment Module are described in Table I.

Table I. COMM/C&DH EM Subsystem Functions

Subsystem and Performance Specification	Major Subsystem Functions
Command and Data Handling Subsystem (C&DH) PS20008567	– Provides data formatting for S–band telemetry links. – Decodes and distributes uplink commands. – Provides standardized sensor and effector interfaces to local users. – Provides multiple telemetry collection schedules for both S–band downlinks and for onboard closed–loop control. – Provides a real–time clock to synchronize users. – Provides a processing resource to support other subsystem functions. including attitude control, navigation, communications, etc.
Communications Subsystem (COMM) PS20008580	– Performs modulation, coding and high power amplifications of telemetry signals in support of communications via the omni and high–gain antennas. – Performs demodulation of forward link command signals received via the omni and high gain antennas. – Provides on–board frequency reference to support the high accuracy frequency requirements of all Spacecraft subsystems. – Receives and pre–processes TDRSS navigation signals.
Electrical Power Subsystem (EPS) PS20004749	– Provides power distribution and fusing for all local 120 volt users. – Provides positioning control for the solar array.
Thermal Control Subsystem (TCS) PS20008549	– Provides thermal radiators, heaters, sensors, and control for maintaining EM temperatures.
Electrical Accommodations Subsystem (EAS) PS20008636	– Provides the harness and connections for electrical components, including C&DH data busses and discrete wiring. – Grounding and signal reference connections.
Structures & Mechanisms Subsystem (SMS) PS20001415	– Provides mounting and protection for EM components. – Provides a thermal path to carry dissipated component power.

3.1.1 COMM/C&DH Equipment Module Description

The Comm/C&DH Equipment Module houses the S–band RF equipment for command reception and telemetry transmission and the C&DH equipment for command processing and distribution. This EM also houses the telemetry collection and formatting equipment, the Spacecraft Controls Computers, the control electronics for the solar array drive motor, and the equipment to interface with the Spacecraft power, thermal, and C&DH subsystems. An isometric diagram of the Comm/C&DH EM showing the layout of components is shown for reference only in Figure 1.

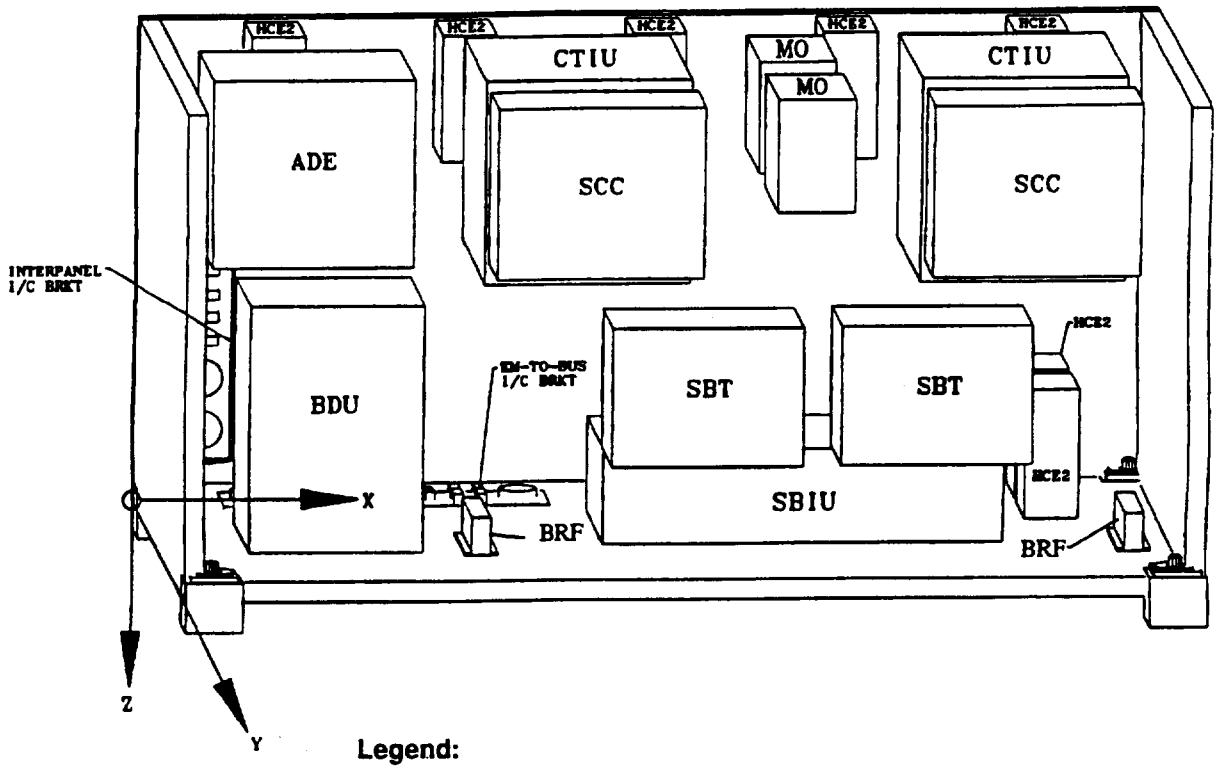

Legend:

ADE	Array Drive Electronics
BDU	Bus Data Unit
BRF	Band Reject Filter
CTIU	Command Telemetry Interface Unit
FDB	Fuse Distribution Box
HCE	Heater Control Electronics
I/C BRKT	Interface Connector Bracket
MO	Master Oscillator
SBIU	S–band Interface Unit
SBT	S–band Transponder
SCC	Spacecraft Controls Computer

Figure 1. Isometric Diagram of the COMM/C&DH EM

The COMM/C&DH Equipment Module performs the following functions:

a. Receiving, demodulating, and decoding S–band command data.

b. Management and control of the Spacecraft Command and Telemetry Data Bus.

c. Coding and modulating the Spacecraft housekeeping telemetry and low–rate science data.

d. Routing the S–band signals to and from the Spacecraft antennas and the S–band transponders.

e. Electronic Control of the Solar Array rotation.

f. Performing onboard Spacecraft housekeeping control and data processing support.

g. Providing an on–board frequency reference and time updates for the Spacecraft.

3.1.2 Interface Definition

The Comm/C&DH EM and all included components shall utilize the standard interfaces defined in the General Interface Specification (GIS) for the Earth Observing System, IS20008501. Exceptions must be explicitly noted in either the component specifications or this document.

3.1.2.1 Electrical Interfaces

Electrical connections between and among the components of all subsystems within the module are part of the EM harness design. An electrical interface connector bracket attached to the +Z panel shall support all module harness interface connectors required to mate with the bus harness. Figure 2 shows the primary internal and external connections for the Comm/C&DH Module.

[1] All electrical connections between the Spacecraft and the Comm/C&DH EM shall meet the requirements of the GIS (IS20008501), the EMC Control Plan (PN20005869), and the Electrical Accommodations Subsystem (EAS) Performance Specification (PS20008636) regarding Power, Grounds, Standard Signal Interfaces, Test Points, Connectors, Pin Allocations, and harness design and construction.

[2] All electrical connections between the components in the COMM/C&DH EM and between the COMM/C&DH EM and the Spacecraft core shall be accomplished through the use of interconnecting cables as described in the COMM/C&DH EM Harness Installation Drawing, 20038241.

[3] All electrical connections between the components in the COMM/C&DH EM and between the EM and the Spacecraft Core shall be accomplished through the use of interconnecting cables as described in the Comm/C&DH EM harness installation drawing, 20038241.

3.1.2.1.1 Spacecraft Power Bus Interface

[1] The Comm/C&DH EM shall accept a prime power voltage of 120 volts DC ±4%.

[2] The recorder EM shall connect to the 120V Spacecraft power bus via four power feeds as shown in Figure 3.

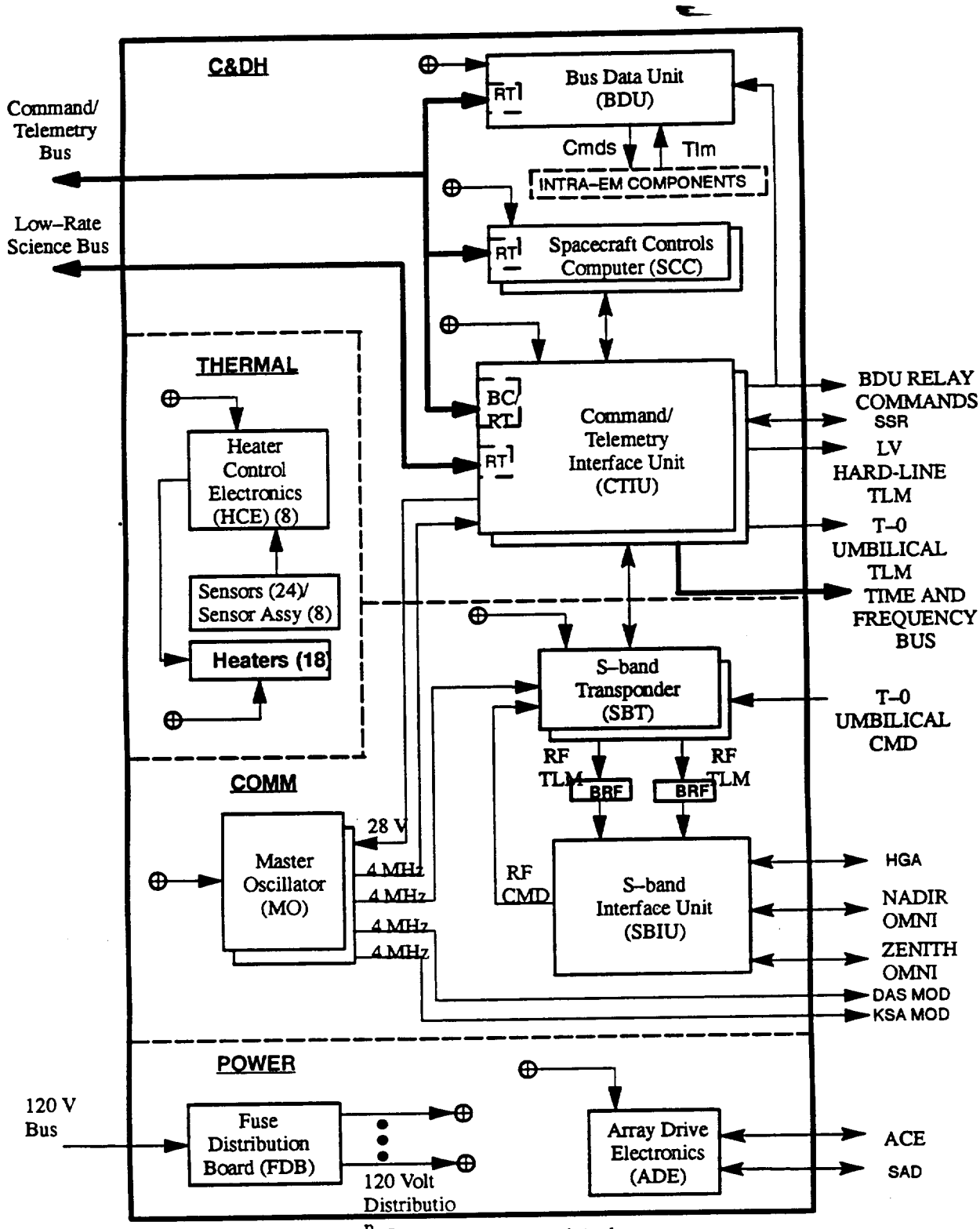

Figure 2. COMM/C&DH Equipment Module (EM) Block Diagram

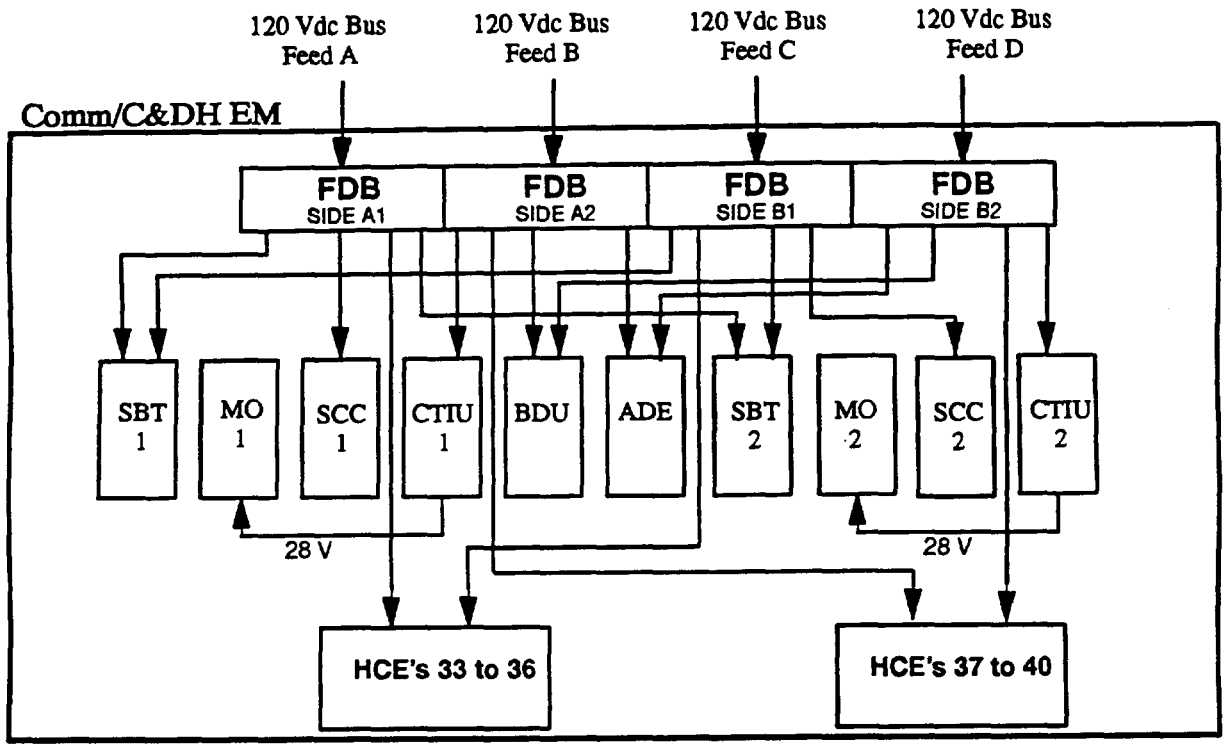

Figure 3. Power Distribution in the COMM/C&DH Equipment Module

3.1.2.1.2 Spacecraft Command and Telemetry Bus

[1] The Command and Telemetry (C&T) Bus which provides both internal and external connections to the Comm/C&DH EM shall be implemented according to MIL-STD-1553B.

[2] The C&T bus shall be comprised of two separate, redundant busses (A and B).

[3] Separate triaxial connectors, one each for both the A and B buses, shall be provided at the external interface of the Comm/C&DH EM.

[4] Interfaces with the C&T buses shall be over shielded twisted pair transformer coupled connections.

[5] Each side of the BDU shall interface to both the A and B Spacecraft C&T buses. The BDU shall distribute commands to, and collect telemetry from, all components located in the Comm/C&DH EM.

[6] The RT address assignments on the Command and Telemetry Bus shall be as listed in Table II. The component RT addresses listed in Table II will be programmed via jumper plugs provided by the EAS.

The C&T bus connections are shown conceptually in Figure 4. One CTIU acts as bus controller (BC), and the other CTIU, the two SCCs, and the BDU are configured as remote terminals (RT). Each of these components is connected to the C&T bus via transformer–coupled stubs which are provided as part of the EM harness. One end of each of the two busses is terminated in the EM as part of the harness. The bus extends outside the EM to provide other housekeeping equipment and the Instruments with a path to communicate housekeeping commands and telemetry to and from the CTIU.

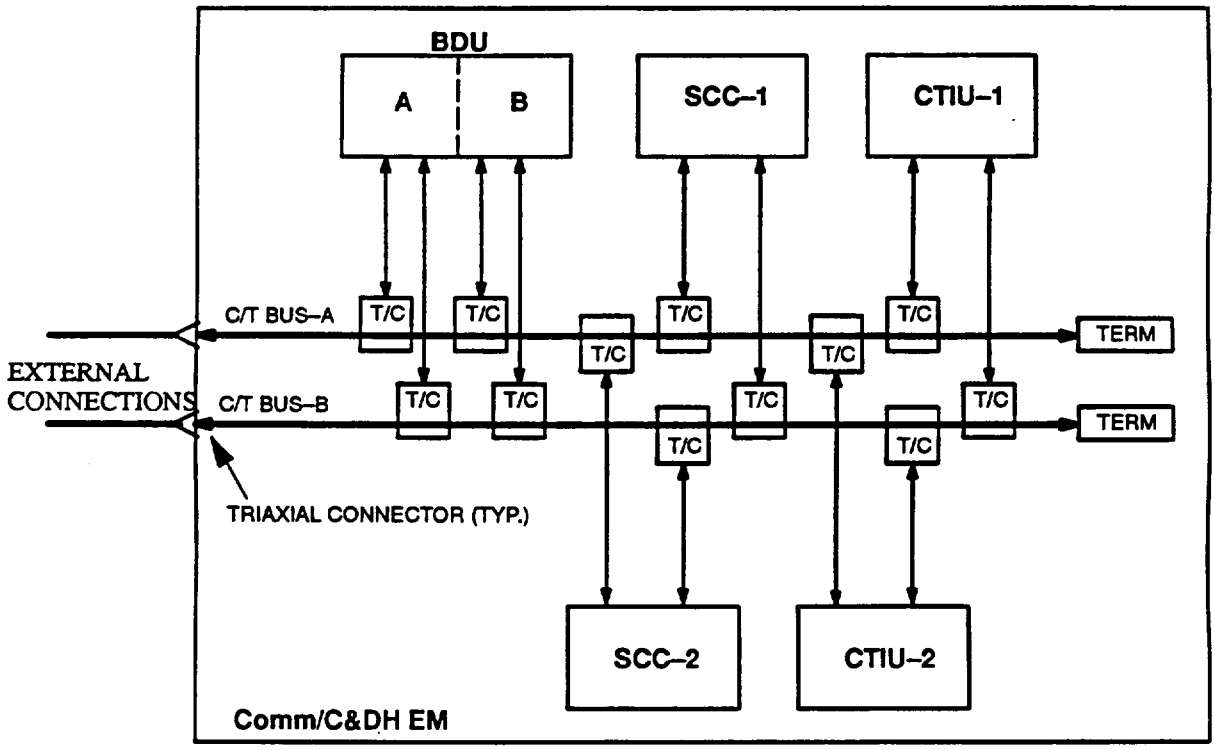

NOTES:
1. T/C=TRANSFORMER COUPLER
2. CONNECTION ORDER NOT NECESSARILY AS SHOWN
3. BUSSES ARE MIL-STD-1553B

Figure 4. Command/Telemetry Bus Connections

Table II. Command and Telemetry Bus RT Address Assignments

Unit	RT Address
CTIU–1	1
CTIU–2	2
SCC–1	3
SCC–2	4
BDU	16

3.1.2.1.3 Spacecraft Low Rate Science Bus Interface

[1] The Low Rate Science Bus shall be implemented according to MIL–STD–1553B.

[2] The CTIUs shall be configured as RTs on the Low Rate Science bus.

[3] Redundant Low Rate Science bus (A and B) connections shall be provided by separate triaxial connectors located on the EM.

[4] Each CTIU shall be connected to both A and B Low Rate Science buses through transformer–coupled stubs provided by the EAS.

[5] The RT addresses assigned to CTIU–1 and CTIU–2 shall be 1 and 2, respectively. The CTIU RT addresses will be programmed via jumper plugs provided by the EAS.

3.1.2.1.4 Spacecraft Time Mark and Frequency Bus Interface

[1] The Spacecraft Time Mark and Frequency Bus shall consist of two separate, redundant buses (A and B).

[2] Each Time Mark and Frequency Bus shall interface with both CTIUs, although the bus will be driven by one CTIU at a time.

[3] Separate triaxial connectors, one each for both the A and B Time Mark and Frequency buses, shall be provided at the external interface of the Comm/C&DH EM.

[4] Cabling for the Time Mark and Frequency bus shall be 100 ohm, double-shielded twisted pair.

Time Mark and Frequency bus connections are shown conceptually in Figure 5.

3.1.2.1.5 Intra–EM Signal Interfaces

3.1.2.1.5.1 SCC/CTIU Interface

[1] The interface between the SCCs and the CTIUs shall be in accordance with the C&DH Subsystem Performance Specification, PS20008567.

[2] This interface shall be fully cross–strapped between both SCCs and both CTIUs.

[3] Signals between the SCC and CTIU shall be compatible with RS–422.

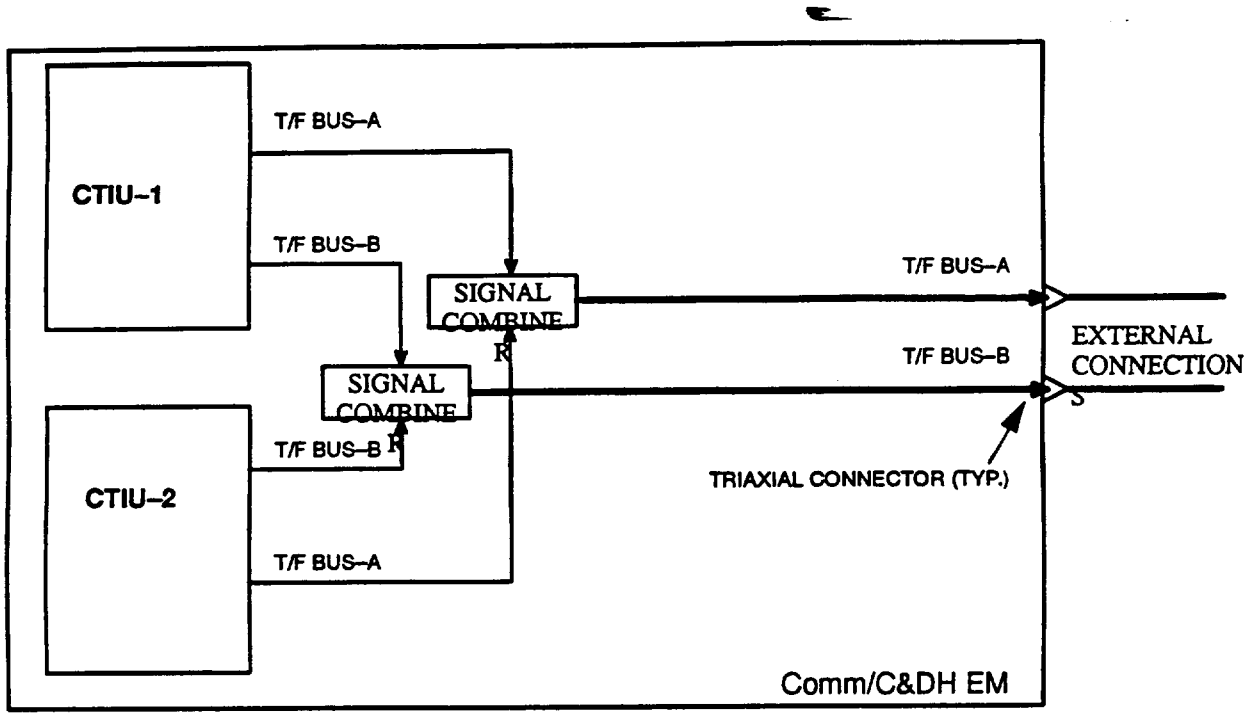

Figure 5. Time Mark and Frequency Bus Connections

3.1.2.1.5.2 SBT/SBIU Interface

[1] The interface between the SBTs and the SBIUs shall be in accordance with the Communications Subsystem Performance Specification, PS20008580.

[2] Signals between the SBT and SBIU shall be compatible with RS–422.

3.1.2.1.5.3 CTIU/SBT Interface

[1] The interface between the CTIUs and the SBTs shall be in accordance with the Command/Telemetry Interface Unit Performance Specification, PS20008569, and the S–band Transponder Performance Specification, PS20008584.

[2] The CTIU/SBT interfaces shall be RS–422 compatible.

Connections between the CTIU and SBT are shown in Figures 6 and 7. Both CTIUs will receive uplink baseband traffic from both SBTs, while only one CTIU at a time will provide valid downlink telemetry to the SBTs.

3.1.2.1.5.4 Master Oscillator (MO) Internal Interfaces

[1] The interface between the Master Oscillator and the CTIU shall be as defined in the Command/Telemetry Interface Unit Performance Specification, PS20008569, and the Master Oscillator Performance Specification, PS20008543.

[2] The cables between the MOs and the CTIUs shall be shielded twisted pair.

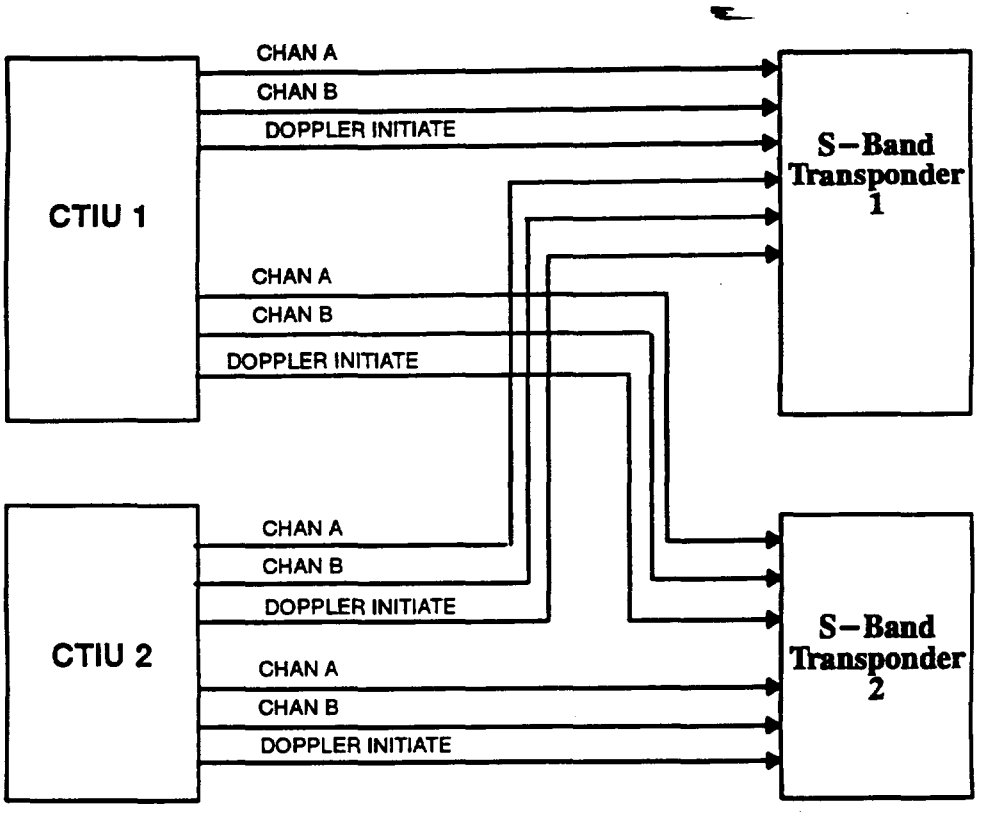

Figure 6. CTIU to S–Band Transponder (SBT) Interface

[3] The interface between the MO and the SBT shall be as defined in the S–band Transponder Performance Specification, PS20008584, and the Master Oscillator Performance Specification, PS20008543.

[4] Cables between the MOs and the SBTs shall be coaxial type RG303.

The MO interfaces internal to the Comm/C&DH EM are shown in Figure 8.

3.1.2.1.5.5 Thermal Control and Monitoring Interfaces

[1] The thermal control interfaces involving sensors, heaters, and HCEs shall be as detailed in the Thermal Control Subsystem Performance Specification, PS20008549.

[2] Strategically located throughout the EM shall be a set of thermistors connected to the BDU for the purpose of tracking thermal performance.

3.1.2.1.5.6 Telemetry Outputs

[1] The format, function, and timing of the various telemetry words for the EM components are listed in an appendix to the respective performance specification of each component.

3.1.2.1.5.7 Command Inputs

[1] The format, function, and timing of the various commands for EM components are listed in an appendix to the respective performance specification of each component.

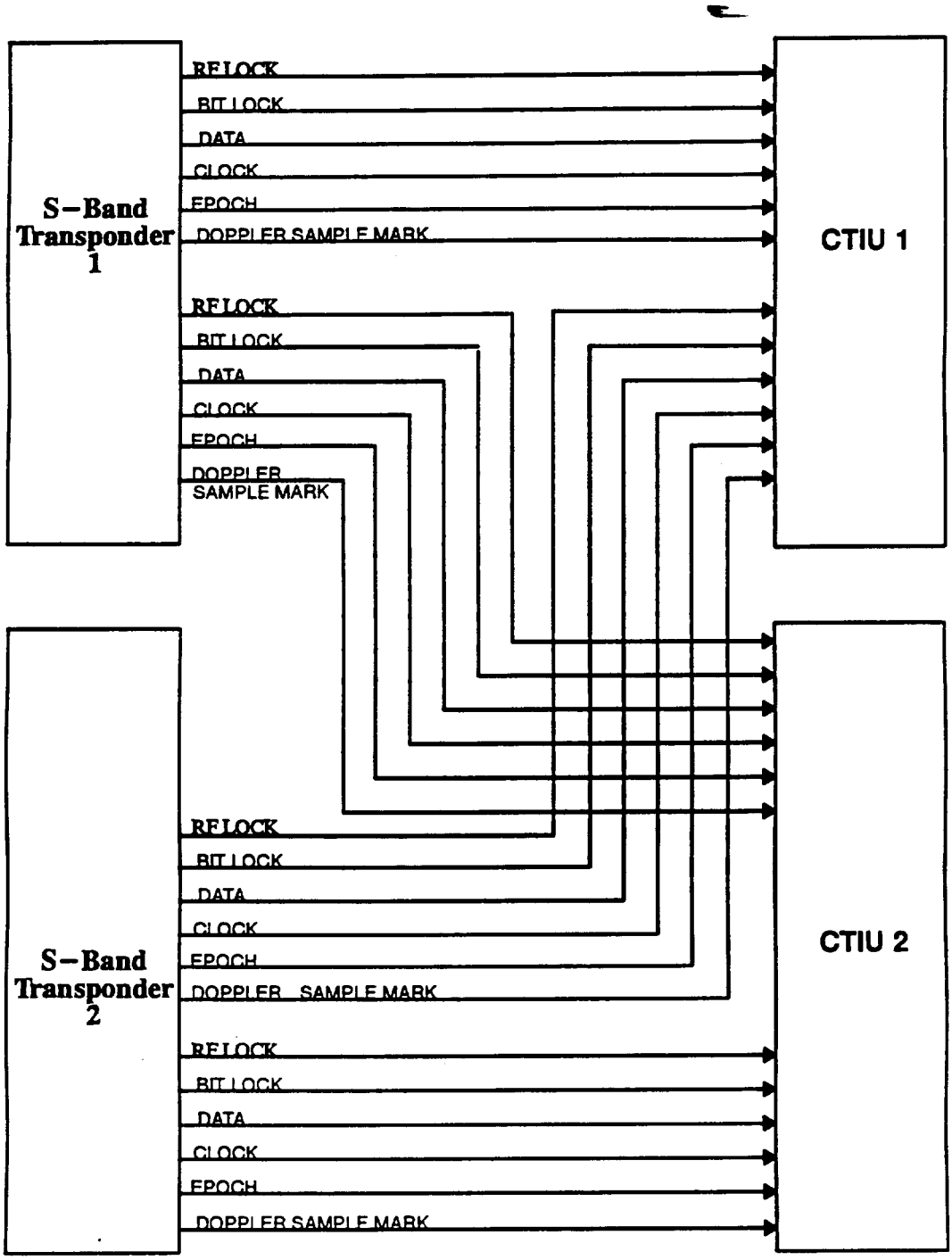

Figure 7. S–Band Transponder (SBT) to CTIU Interface

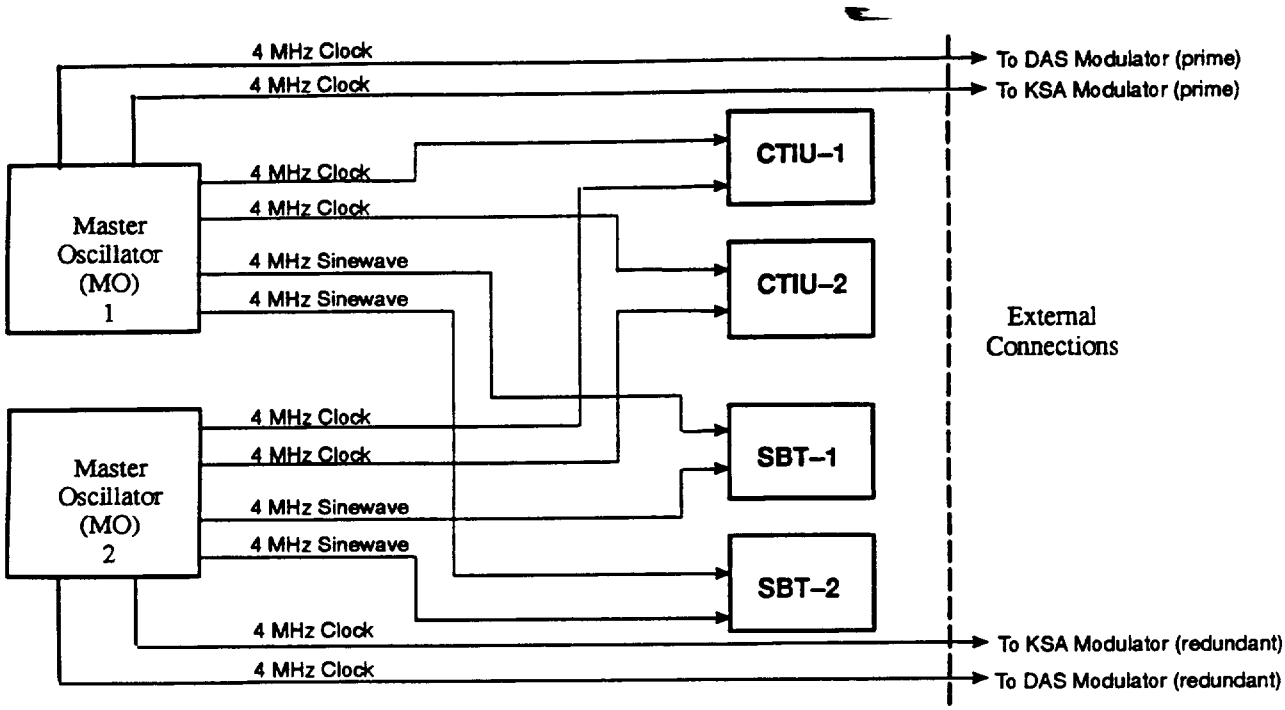

Figure 8. Master Oscillator Connections to the CTIU, SBT and DAS & KSA Modulators

3.1.2.1.6 External Signal Interfaces

3.1.2.1.6.1 Solar Array Drive (SAD) Interface

[1] The electrical interfaces between the ADE in the Comm/C&DH EM and the Solar Array Drive (SAD) shall be as defined in the ADE Performance Specification (PS20008602) and on the ADE interface control drawing (ICD20008602).

[2] The electrical interface shall conform to the RS-422 requirements of the GIS, IS20008501.

Connections between the Comm/C&DH EM and the SAD are shown in Figure 9.

3.1.2.1.6.2 Attitude Control Electronics (ACE) Interface

[1] The electrical interfaces between the ADE in the Comm/C&DH EM and the Attitude Control Electronics (ACE) shall be as defined in the ADE Performance Specification (PS20008602) and on the ADE interface control drawing (ICD20008602).

[2] The electrical interface shall conform to the RS-422 requirements of the GIS, IS20008501.

Connections between the Comm/C&DH EM and the ACE are shown in Figure 9.

3.1.2.1.6.3 Solid State Recorder (SSR) Interface

[1] The electrical interfaces between the CTIU in the Comm/C&DH EM and the Solid State Recorders (SSRs) shall be as defined in the CTIU Performance Specification, PS20008569.

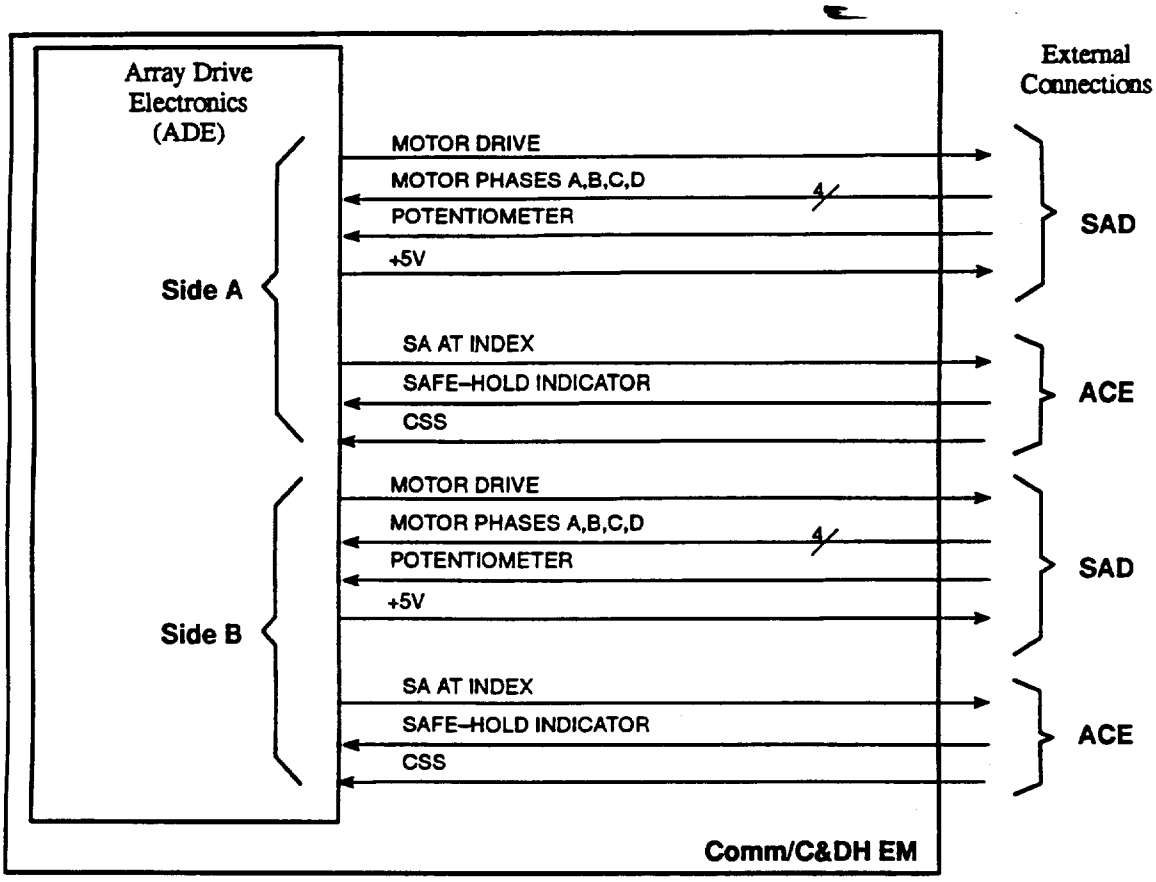

Figure 9. SAD and ACE Interfaces

[2] The cross-strapped bidirectional data interfaces shown in Figures 10 shall be provided for the transfer of serial digital data between the CTIUs and the SSR data control units (DCUs).

[3] The electrical interface shall conform to the RS-422 requirements of the GIS, IS20008501.

The telemetry data rate into the SSR is 16 kbps with a playback rate to the CTIU of 256 or 512 kbps.

3.1.2.1.6.4 Omni Antenna Interface

[1] The SBIU shall interface with the S–band omni antennas as specified in S–band Interface Unit Performance Specification, PS20008586.

[2] The connectors to both omni antennas shall be SMA female.

[3] The maximum RF power level at the omni antenna interfaces shall be less than 5 watts.

3.1.2.1.6.5 High Gain Antenna Interface

[1] The SBIU shall interface with the High Gain Antennas as specified in S–band Interface Unit Performance Specification, PS20008586.

[2] The S–band Interface Unit (SBIU) interface to the HGA shall be via two cables, one for right hand circular polarization (RHCP) and one for left hand circular polarization (LHCP).

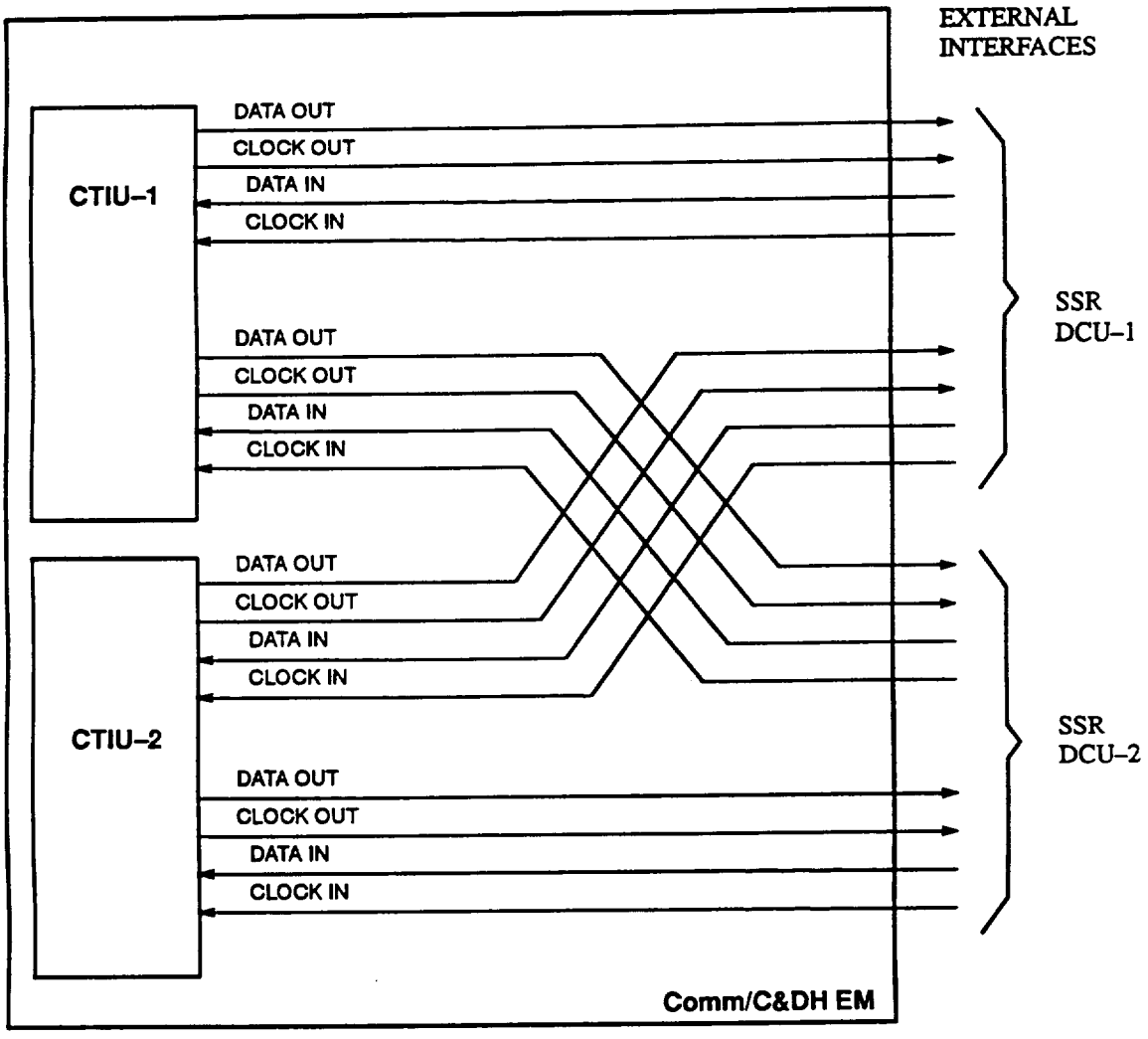

Figure 10. SSR Interface Connections

[3] Both the RHCP and the LHCP connectors shall be SMA female.

[4] The maximum RF power level at these interfaces shall be less than 5 watts.

3.1.2.1.6.6 Bus Data Unit (BDU) Interfaces

[1] The interface between the CTIU and the BDUs shall be as defined in the CTIU Performance Specification, PS20008569.

[2] Discrete relay commands between the CTIU and all Spacecraft BDUs shall be as defined in the CTIU Performance Specification, PS20008569.

[3] The CTIU shall provide telemetry interfaces to the Comm/C&DH EM BDU as defined in the CTIU Performance Specification, PS20008569.

[4] Cross–strapping shall be implemented so that either CTIU can provide relay commands to all BDUs on the Spacecraft.

Discrete command connections between the CTIU and the BDUs are shown in Figure 11.

3.1.2.1.6.7 Master Oscillator (MO) External Interfaces

[1] The interface between the Master Oscillator and the Direct Access Subsystem (DAS) modulator shall be as defined in the DAS Modulator Performance Specification, PS20008589, and the Master Oscillator Performance Specification, PS20008543.

[2] The interface between the MO and the Ku–band Single Access (KSA) modulator shall be as defined in the Ku–band Modulator Performance Specification, PS20008588, and the Master Oscillator Performance Specification, PS20008543.

[3] Each MO to modulator interconnection shall consist of a shielded twisted pair.

Each modulator will receive one 4.0 MHz clock as illustrated in Figure 8.

3.1.2.1.6.8 Launch Vehicle (LV) Hardline Interface

[1] The hardline interface between the CTIU and the launch vehicle which allows telemetry data to be collected during the launch/ascent phase shall be in accordance with the CTIU Performance Specification, PS20008569.

[2] The interface shall conform to the RS-422 requirements of the GIS, IS20008501.

3.1.2.1.6.9 T–0 Umbilical Telemetry Interface

[1] The hardline interface between the CTIU and the T–0 umbilical which allows telemetry data to be collected during the prelaunch phase shall be in accordance with the CTIU Performance Specification, PS20008569.

[2] The hardline telemetry interface connection shall consist of shielded twisted pair cables.

[3] The interface shall conform to the RS-422 requirements of the GIS, IS20008501.

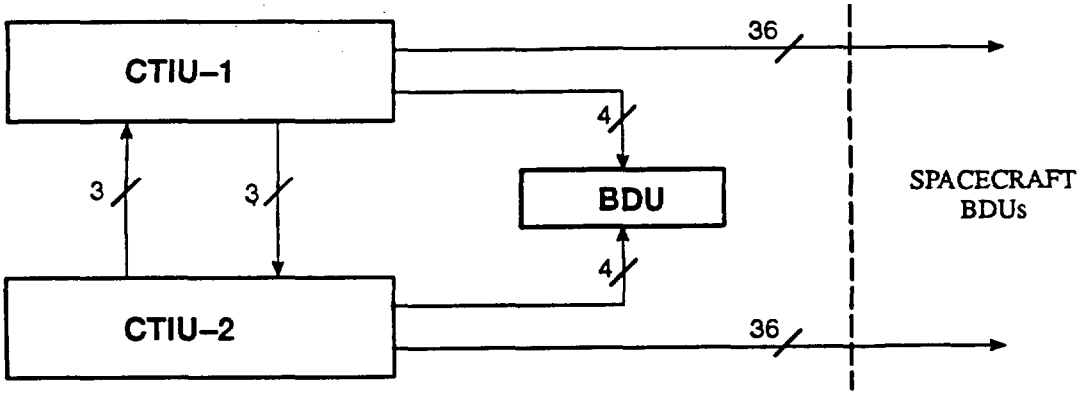

Figure 11. CTIU Discrete Command Connections

3.1.2.1.6.10 T-0 Umbilical Command Interface

[1] The hardline interface between the S–band transponder and the ground support equipment (GSE) via the launch vehicle umbilical for pre–launch command capability shall be in accordance with the SBT Performance Specification, PS20008584, and the Spacecraft to Launch Vehicle Interface Requirements Document, IS20008503.

[2] The hardline command interface connection shall consist of shielded twisted pair cables.

[3] The interface shall conform to the RS-422 requirements of the GIS, IS20008501.

The command rate is 2 kbps on a 16 kHz subcarrier.

3.1.2.2 Mechanical Interface

[1] The Comm/C&DH EM structure shall comply with the requirements of the SMS Performance Specification, PS20001415, regarding coordinate systems, physical characteristics, design and construction, mounting, positioning, mechanisms, dynamic characteristics, structural criteria, and tooling.

[2] The facesheet and core thickness shall be sized to provide adequate stiffness to meet the minimum frequency requirement of Section 3.2.2.8.

[3] The honeycomb core of the Comm/C&DH EM shall shall be densified locally as required to provide adequate strength for component fasteners. The criteria for adequate strength shall be that no component internal to the EM experiences accelerations during testing that are more than 1.25 times those defined in the Predicted Limit Loads figure of the General Interface Specification (GIS), IS20008501.

[4] The Comm/C&DH EM shall be mounted to the Spacecraft primary structure via one 3-axis, one 2-axis, and two single axis kinematic mounts.

[5] A connector bracket on the +Z panel shall provide electrical interface to the Spacecraft bus, and shall be located to facilitate I&T access.

[6] The equipment module shall be designed so it can be independently assembled, tested, attached or detached from the EOS–AM Spacecraft structure without requiring disassembly of thermal control subsystem hardware.

[7] Access to the module components at the Spacecraft level of assembly shall be possible by removal of the -Y panel.

[8] Removal of the –Y panel shall not require the removal of any other Spacecraft equipment.

3.1.2.3 Thermal Interface

[1] All thermal control hardware (heaters, MLI, etc.) in the Comm/C&DH Equipment Module shall meet the thermal control hardware requirements of the GIS, IS20008501, Section 5, Thermal Interfaces.

[2] The Flight Hardware Component Characteristics shall be as specified in the Thermal Control Subsystem (TCS) Performance Specification, PS20008549.

[3] The Comm/C&DH EM shall acquire, spread, and reject component heat to the external Space sink as necessary to maintain the temperature at each component interface to levels below the maximum limits specified in the Temperature Requirements table in Section 5 of the GIS, IS20008501.

[4] The heater control electronics (HCE2), using heaters and thermistors in the Comm/C&DH EM, shall maintain the temperature at each component interface to levels above the minimum limits specified in the Temperature Requirements table in Section 5 of the GIS, IS20008501.

[5] The Comm/C&DH EM shall be designed to ensure that the baseplate temperature variation of the prime and redundant MO shall not exceed 10°C per orbit during normal operations.

[6] Heat dissipating components shall meet the EM/Component Conductive Interface requirements in the GIS, IS20008501, Section 5.

[7] Temperature Sensing Assemblies shall be connected to the BDU for tracking thermal conditions on the Comm/C&DH EM.

3.1.3 Major Component List

The major components of the COMM/C&DH Equipment Module shall be as listed in Table III.

Table III. C&DH/COMM Module Components

Subsystem	Component	Part Number
C&DH	Bus Data Unit (BDU) Command/Telemetry Interface Unit (CTIU) (2) Spacecraft Controls Computer (SCC) (2)	20008568 20008569 20008570
Communications	Master Oscillator (MO) (2) S–band Transponder (SBT) (includes the Band Reject Filter (BRF)) (2) S–band Interface Unit (SBIU)	20008543 20008584 20008586
Power	Array Drive Electronics (ADE) Fuse Distribution Box (FDB)	20008602 20008694G1
Thermal	Heater Control Electronics (9) C&DH/Comm Module Thermal Blanket Temperature Sensor (24) Temperature Sensing Assembly (8) Heaters (18)	20008785 20008675 20008790 20008791 20008788
Electrical Accommodations	C&DH/Comm Module Harness Installation	20038241
Structures and Mechanisms	Secondary Structure Access Panel –Y Radiator Panel Assembly –Z Radiator Panel Assembly +Y Kinematic Mount (4) Base Panel +Z End Panel +X, –X	20008891 20008892 20008893 20008894 20001400 20008895 20008896

3.2 Characteristics

3.2.1 Performance

3.2.1.1 Command Reception and Distribution

The Equipment Module shall conform to all of the command reception and distribution requirements as detailed in section 3.2.1.1 of the Command and Data Handling (C&DH) Subsystem Performance Specification, PS20008567.

3.2.1.2 Telemetry Collection, Formatting and Distribution

The Equipment Module shall conform to all of the telemetry collection, formatting and distribution requirements as detailed in section 3.2.1.2 of the Command and Data Handling (C&DH) Subsystem Performance Specification, PS20008567.

3.2.1.3 Ancillary Data

The Equipment Module shall conform to all of the ancillary data requirements as detailed in section 3.2.1.3 of the Command and Data Handling (C&DH) Subsystem Performance Specification, PS20008567.

3.2.1.4 Bus Utilization

The Equipment Module shall conform to all of the bus utilization requirements as detailed in section 3.2.1.6 of the Command and Data Handling (C&DH) Subsystem Performance Specification, PS20008567.

3.2.1.5 EM Computing Resources

The Equipment Module shall conform to all of the computing resources requirements as detailed in section 3.2.1.7 of the Command and Data Handling (C&DH) Subsystem Performance Specification, PS20008567.

3.2.1.6 Time Distribution and Synchronization Services

The Equipment Module shall conform to all of the time distribution and synchronization requirements as detailed in section 3.2.1.8 of the Command and Data Handling (C&DH) Subsystem Performance Specification, PS20008567, and section 3.2.1.3 of the Communications Subsystem (COMS) Performance Specification, PS20008580.

3.2.1.7 Science Data Handling

The Equipment Module shall conform to all of the science data handling requirements pertaining to the CTIU as detailed in section 3.2.1.8 of the Command and Data Handling (C&DH) Subsystem Performance Specification, PS20008567.

3.2.1.8 Solar Array Drive Control

[1] The Comm/C&DH EM shall receive commands on the Command and Telemetry Bus and signals from the Coarse Sun Sensor (CSS) and Attitude Control Electronics (ACE).

[2] The Array Drive Electronics (ADE) within the Comm/C&DH EM shall generate the correct control signals to drive the Solar Array Drive as detailed in the ADE Performance Specification, PS20008602.

3.2.1.9 Communications Requirements

3.2.1.9.1 S–band Command Reception

[1] The Equipment Module shall conform to all of S–band command reception requirements as detailed in sections 3.2.1.1, 3.2.1.4, 3.2.1.5 and 3.2.1.8 of the Communications Subsystem (COMS) Performance Specification, PS20008580.

[2] The Equipment Module shall be configured such that there will be no switches in the command path between any of the antennas and the S–band transponders.

[3] Receive signals shall be routed such that both transponders can receive commands from any of the four antenna ports simultaneously.

3.2.1.9.1.1 Command Threshold

The Equipment Module shall have a command threshold at or below the values of RF input power (referenced to the S–band Transponder input interface) listed in S–band Transponder Performance Specification, PS20008584, Table IV. The command threshold is defined as the RF input power level at which the error rate of the data out of the S–band Transponder equals 1×10^{-5} per bit.

3.2.1.9.2 S–band Telemetry Transmission

[1] The Equipment Module shall conform to all of S–band telemetry transmission requirements as detailed in sections 3.2.1.1, 3.2.1.4, 3.2.1.5 and 3.2.1.8 of the Communications Subsystem (COMS) Performance Specification, PS20008580.

[2] The Equipment Module S–band output power level shall be greater than 33.5 dBm.

[3] The Equipment Module shall have the capability of routing signals from either of the two S–band transponders to any of the four RF transmission ports (zenith omni, nadir omni, HGA LHCP, HGA RHCP).

[4] It shall be possible to transmit from both transponders via different antennas simultaneously.

3.2.1.10 Navigation and Tracking

The Equipment Module shall conform to all of navigation and tracking support requirements as detailed in section 3.2.1.2 of the Communications Subsystem (COMS) Performance Specification, PS20008580, and section 3.2.1.8 of the Command and Data Handling (C&DH) Subsystem Performance Specification, PS20008567.

3.2.2 Physical Characteristics

3.2.2.1 Mass

The mass of the COMM/C&DH Equipment module shall not exceed 310 lbs.

3.2.2.2 Power Consumption and Thermal Dissipation

The one–orbit average power consumption and thermal dissipation of the Comm/C&DH EM for the different EOS–AM Spacecraft operating modes shall not exceed the values in Table IV.

3.2.2.3 Dimension

The dimensions of the COMM/C&DH Equipment module shall not exceed the maximum dimensions given below, including connectors, as defined in assembly drawing 20008745:

Length (X)	52.5 inches
Width (Y)	70.65 inches
Height (Z)	37.5 inches.

3.2.2.4 Transport and Storage

[1] Accommodations for tie–downs, pallets, packaging, and containers necessary for transport and storage of the Comm/C&DH EM shall be made to ease handling by, and interaction with, Ground Support Equipment (GSE).

[2] The proper orientation for placing items in storage or transportation containers shall be obvious by design or marking.

[3] The Comm/C&DH EM shall provide lift points capable of supporting the EM and any accompanying GSE under handling loads of 2g vertical (per MIL–STD–1367A).

[4] When four or more lift points are provided, a combination of any three lift points shall be capable of lifting the entire load.

[5] Lift points for the Comm/C&DH EM shall be chosen such that their use does not hamper the installation of the EM on the spacecraft structure.

3.2.2.5 Integration and Test

[1] The S–band Transponder shall accept hardline commands from the GSE via the T–0 umbilical as specified in the S–band Transponder Performance Specification, PS20008584.

[2] The CTIU shall provide prelaunch telemetry via a hardline link through the T–0 umbilical as specified in the CTIU Performance Specification, PS20008569.

[3] The Comm/C&DH EM shall supply test points via the interface connector for inputs to and outputs from both CTIUs.

[4] Command and housekeeping telemetry capabilities shall be available both with and without RF links.

Table IV. Power Consumption and Thermal Dissipation [Watts]

Component	Ground Test and Launch/ Ascent[1]	Standby Mode	Delta–V Mode	Science Mode			Survival Mode[1]	Safe Mode[5]	
				Max[4]	Nominal[2]	Min[3]		Max[1]	Min
POWER CONSUMPTION:									
SCC #1	17	17	17	17	17	17	17	17	17
SCC #2	0	17[6]	0[6]	0[6]	0[6]	0[6]	0[6]	0[6]	0[6]
SBT #1	71.5	24.2	24.2	28.1	24.2	20.4	71.5	71.5	24.2
SBT #2	16.5	16.5	16.5	16.5	16.5	16.5	16.5	16.5	16.5
SBIU	0	0	0	0	0	0	0	0	0
CTIU #1	34.3	34.3	34.3	34.3	34.3	34.3	34.3	34.3	34.3
CTIU #2	27.9	27.9	27.9	27.9	27.9	27.9	27.9	27.9	27.9
BRF	0	0	0	0	0	0	0	0	0
ADE	9.2	9.2	9.2	9.2	9.2	9.2	9.2	9.2	9.2
BDU	9.2	9.2	9.2	9.2	9.2	9.2	9.2	9.2	9.2
HCEs	7.5	7.5	7.5	7.5	2.5	2.5	7.5	7.5	2.5
Heaters	0 (TBR–1)	0 TBR–1	0 TBR–1	16 TBR–1	14.2 TBR–1	0 TBR–1	0 TBR–1	0 TBR–1	0 TBR–1
Total EM:	193.1	162.8	145.8	165.7	155.0	142	193.1	193.1	145.8
THERMAL DISSIPATION:									
SCC #1	17	17	17	17	17	17	17	17	17
SCC #2	0	17[6]	0[6]	0[6]	0[6]	0[6]	0[6]	0[6]	0[6]
SBT #1	66	23.1	23.1	26.4	23.1	19.8	66	66	23.1
SBT #2	16.5	16.5	16.5	16.5	16.5	16.5	16.5	16.5	16.5
SBIU	1	1	1	1	1	1	1	1	1
CTIU #1	34.3	34.3	34.3	34.3	34.3	34.3	34.3	34.3	34.3
CTIU #2	27.9	27.9	27.9	27.9	27.9	27.9	27.9	27.9	27.9
BRF	0.44	0.44	0.09	0.13	0.09	0.04	0.44	0.44	0.09
ADE	6.1	6.1	6.1	6.1	6.1	6.1	6.1	6.1	6.1
BDU	8.3	8.3	8.3	8.3	8.3	8.3	8.3	8.3	8.3
HCEs	7.5	7.5	7.5	7.5	2.5	2.5	7.5	7.5	2.5
Heaters	0 TBR–1	0 TBR–1	0 TBR–1	16 TBR–1	14.2 TBR–1	0 TBR–1	0 TBR–1	0 TBR–1	0 TBR–1
Total EM:	185.0	159.1	141.8	161.1	151.0	133.4	185.0	185.0	136.8

(1) Both SBTs receive, SBT#1 transmits continuously. (2) SBT#1 20% transmit duty cycle, both SBTs receive continuously

(3) SBT1 10% xmit duty (one missed TDRSS contact) (4) SBT#1 30% transmit duty cycle, both SBTs receive continuously

(5) For the Comm/C&DH EM, safe mode level 0 safe mode is the maximum power case and level 8 is the minimum power case.

(6) SCC #2 is nominally in cold standby, but both SCCs may be operational for several orbits while SCC#2 is in hot standby in preparation for switching control from SCC #1 to SCC#2. Both SCCs will be powered during checkout in standby mode.

[5] The Comm/C&DH EM design shall ensure that access to the interface connector is sufficient to preclude the need for blind–mate connectors during installation of the EM on the Spacecraft Core.

[6] Ground cooling during ambient tests of the EM shall be accomplished by (TBD–1).

[7] Items which for safety reasons may require rapid pre-launch maintenance shall be readily accessible.

[8] Items requiring frequent access during I&T or other prelaunch operations shall be accessible.

3.2.2.6 Layout

[1] To the extent practical, fuses for the Comm/C&DH EM shall be located such that it is possible to replace or view any fuse without requiring any disassembly of the EM.

[2] To the extent practical, the layout of components within the Comm/C&DH EM shall ensure that any component contained in the EM can be removed without having to remove any other component.

[3] Component spacings shall provide adequate clearance for harness runs.

[4] All flight equipment which would require maintenance during a storage period of 5 years or less shall be accessible when the Spacecraft is in its stored configuration.

[5] All Spacecraft components which are fragile or otherwise susceptible to damage shall, where practical, be guarded or located so as to reduce this susceptibility.

[6] Sensitive adjustment controls and actuators shall be located or guarded to protect them from inadvertent perturbation.

[7] Component labeling shall be visible when the component is installed in the parent assembly or stowed. Labels shall be installed such that they are readable by the unaided human eye.

3.2.2.7 Configuration

[1] The Equipment Module shall conform to assembly drawing 20008745.

[2] The assembly drawing shall define the following parameters:

a. Physical size

b. Mounting requirements and interfaces

c. External finishes

d. Electrical connector locations and sizes

e. Connectors reference designators

f. Method of identification

3.2.2.8 Natural Frequency

The natural frequency of the Comm/C&DH EM shall be no less than 40 Hz when measured at the base of the EM's kinematic mounts.

3.2.3 Reliability

The probability of mission success (P_s) is allocated to the individual subsystems and their components. This information may be found in the applicable performance specifications.

3.2.4 Durability

The Comm/C&DH EM shall operate as specified herein for at least a five–year operational life.

3.2.5 Maintainability

[1] The COMM/C&DH EM shall be designed so that no regular maintenance will be required.

[2] Removable dust covers or other protective devices shall be provided over electrical connectors.

3.2.6 Environmental Conditions

3.2.6.1 General

[1] The Comm/C&DH EM shall meet the performance requirements specified herein during and after exposure to the natural and induced environment conditions defined in the GIS, IS20008501, Section 6.

[2] The Comm/C&DH EM shall remain undamaged during and immediately following exposure to the protoflight environmental test levels corresponding to the pre–launch, launch/ascent, and on–orbit environments defined in the Verification Specification, IS20005404.

[3] The Comm/C&DH EM shall meet the performance specifications specified herein after exposure to the test, launch, and mission orbit environments specified in the GIS, IS20008501, Section 6.

3.2.6.2 Sine Vibration

[1] The Comm/C&DH EM shall remain undamaged during and following exposure to the sine vibration tests defined in the appendix to the Structures and Mechanisms Subsystem Performance Specification, PS20001415.

[2] The Comm/C&DH EM structure shall ensure that no component internal to the EM experiences accelerations greater than 1.25 times those defined in the Predicted Limit Loads figure of the General Interface Specification (GIS), IS20008501 when the EM experiences the test levels defined above.

3.2.6.3 Contamination

[1] The EM shall comply with the requirements of the Contamination Control Plan, PN20001412.

3.2.7 Transportability

[1] The Comm/C&DH EM shall be capable of being transported by surface vehicle or aircraft.

[2] The shipping environment shall be controlled so as to be less severe than the specified operating environment.

3.3 Design and Construction

[1] The Comm/C&DH EM design shall be such that it can be independently assembled, tested, and attached to or detached from the EOS–AM Spacecraft structure.

[2] The Comm/C&DH EM design shall preclude improper installation to the Spacecraft, where practical.

[3] All electrical connectors shall be selected, sized, keyed, and/or marked such that incorrect attachment to the mating connector is prevented.

[4] All connectors shall attach such that the connectors cannot be inadvertently unlocked during ground operations.

[5] The EM design shall comply with the Design and Construction requirements specified in the GIS, IS20008501, for General requirements, Identification and Marking except for the Content paragraph, Finishes, Venting, Interchangeability, and Drawing Terms and Tolerances.

3.3.1 Materials, Parts, and Processes

All materials, parts, and processes used in the design and construction of the Comm/C&DH EM shall be selected and controlled in accordance with the requirements for Tooling in section 4 of the GIS, IS20008501.

3.3.2 Electric Fields

[1] Components shall meet the electric field emissions requirements in the Equipment Radiated Emissions (RE02, RE01/RE04) section of the Equipment EMI Requirements in the EMC Control Plan, PN20005869.

[2] Components shall meet the requirements of the Radiated Susceptibility (RS03) Electric Fields section and the

[3] Radiated Susceptibility On–Orbit Environment section of the Equipment EMI Requirements in the EMC Control Plan, PN20005869.

3.3.3 Magnetic Fields

[1] Components shall meet the magnetic field emission and

[2] magnetic properties requirements in the Equipment Radiated Emissions and Equipment Radiated Properties sections respectively of the Equipment EMI Requirements in the EMC Control Plan, PN20005869.

[3] Components shall meet the requirements of the radiated Susceptibility (RS01) Magnetic Fields section of the Equipment EMI Requirements in the EMC Control Plan, PN20005869.

3.3.4 Nameplates and Product Marking

[1] The Comm/C&DH EM shall be marked for identification in accordance with the Identification Marking Standard, S32534, Rev E, and ICD20008745.

[2] Conspicuous markings or labels shall be affixed to the Comm/C&DH EM components.

[3] The identification shall contain, as a minimum, the following:

a. Astro Space Part Number

b. "Comm/C&DH Equipment Module"

c. Revision Level

d. Date of Manufacture

e. Contract Number

[4] Applicable date–sensitive information shall be identified.

[5] Hardware or equipment which is not suitable for use in flight, and which could be accidentally substituted for flight or flight spares hardware, shall be plainly marked and identified to indicate this status.

[6] All test points, adjustment devices, and alignment points shall be labeled for positive identification.

[7] Wires and cables for hardware shall not be identified by hot stamping directly onto primary or secondary (shield) insulation.

[8] The proper orientation for placing items in storage or transportation containers shall be obvious by design or marking.

3.3.5 Workmanship

The construction and assembly of the COMM/C&DH EM shall be in accordance with the workmanship requirements as specified in NHB 5300.4 (3A–1, 3G through 3K).

3.3.6 Safety

[1] The Comm/C&DH EM design shall meet the factors of safety presented in section 4.0 of the GIS, IS20008501.

[2] Where practical, hazards shall be eliminated or removed through design measures.

[3] Hazards which cannot be eliminated or removed shall, where practical, be prevented through incorporation and use of safety devices or features.

[4] Remaining hazards shall be controlled using warning devices and/or special procedures.

[5] Automated detection and safing of hazards which may cause personnel injury or loss of the Spacecraft shall be independent of those subsystems being monitored.

[6] Where practical, the detection and safing of lesser hazards shall also follow this practice.

[7] Design decisions shall accommodate compliance with safety requirements specified in this document before accommodating any other considerations (e.g., cost, schedule, performance).

3.3.7 Human Performance/Human Engineering

The Comm/C&DH EM shall comply with the human engineering criteria of MIL–STD–1472.

3.4 Documentation

Documentation shall be in accordance with the Data Requirements list of the EOS-AM Spacecraft Statement of Work (SOW), contract number NAS5-32500.

3.4.1 Specifications

All parent and component specs associated with this spec are shown in the EOS-AM Spacecraft Specification Tree, 20008536.

3.4.2 Drawings

[1] The Comm/C&DH EM shall be defined by prepared drawings.

[2] Drawing 20008745 shall define and control the physical parameters of the EM.

[3] Drawing 20038241 shall define and describe the EM harness.

3.4.3 Test Plans and Procedures

Detailed qualification and acceptance test plans and procedures shall be prepared.

3.5 Precedence

In the event of conflicting requirements between the documents referenced herein and the content of this document, the following descending order of precedence shall be used in resolution of the conflict:

a. Requirements Document (RD) for the EOS–AM Spacecraft, GSFC 421–10–01

b. Performance Assurance Requirements for the EOS Observatories (PAR)

c. Unique Instrument Interface Documents (UIIDs)

d. The General Instrument Interface Specification (GIIS), GSFC 420–03–02

e. Contract End Item (CEI) Specification for the EOS–AM Spacecraft, PS20005396

f. External Interface Control Documents(ICD's) (e.g., EOS to Launch Vehicle, EOS to TDRSS, etc.)

g. Subsystem and Major Assembly Specifications (including this specification)

h. Component Specifications.

(This page intentionally left blank.)

4 QUALITY ASSURANCE PROVISIONS

This section outlines the requirements and structure of a quality assurance program for the COMM/C&DH Equipment Module. The purpose of the program is to demonstrate that the design of the Equipment Module and its components meets the performance requirements, has been manufactured properly, and will operate as designed in association with all other EOS–AM Spacecraft interfaces. The Performance Assurance Implementation Plan (PAIP), PN20005397, documents the overall quality assurance approach for the EOS–AM Spacecraft. The specifics of the performance verification process are documented in the Verification Plan, PN20005404.

4.1 General

Each of the requirements of Section 3 of this specification shall be verified by performance of inspection, analysis, demonstration, or test of the COMM/C&DH Equipment Module as delineated. Test methods and measurements shall be compliant with all requirements specified herein.

4.1.1 Responsibility for Tests

Unless otherwise specified herein, or in the Statement of Work, acceptance and qualification testing shall be performed by Martin Marietta Astro Space (Astro Space).

4.1.2 Special Tests and Examinations

Not Applicable

4.1.3 Reliability Test

Not Applicable

4.1.4 Engineering Evaluation and Test

Not Applicable

4.1.5 Protoflight Test

Protoflight tests, combined with the other verification methods of Attachment A, shall verify that the flight hardware design meets the technical requirements of Section 3 of this equipment module specification to assure operational suitability in the defined environments. Protoflight test hardware shall be used for qualification testing and shall be identical in configuration and production processing to flight hardware.

Protoflight tests, where specified, shall consist of qualification level exposure of the first flight article for acceptance level durations (time and/or cycles).

Protoflight tests shall be performed under strict control of environments and test procedures. Adjustments or tuning of protoflight test hardware is not permitted throughout the entire test program. The requirements of Section 3 to be verified prior to, during, or after each environment shall be as specified in PN20008745.

4.1.6 Installation Test and Checkout

Installation testing and checkout such as continuity checking, interface mating, support equipment compatibility, and documentation verification shall be done in accordance with the GIS, IS20008501, and the COMM/C&DH Equipment Module Test Plan, PN20008745. The COMM/C&DH Equipment Module integration and test flow is shown in Figure 12.

4.1.6.1 Electrical Integration and Checkout (EIC)

An EIC shall be performed to verify the proper input and grounding of power, commands, and signals prior to mating of flight hardware. The EIC shall also verify proper response to power, commands, and signal upon initial integration of flight hardware. The COMM/C&DH EM components shall be integrated with the panel in the following order:

1. COMM/C&DH EM Harness
2. Fuse and Distribution Board
3. Command/Telemetry Interface Unit "A"
4. Command/Telemetry Interface Unit "B"

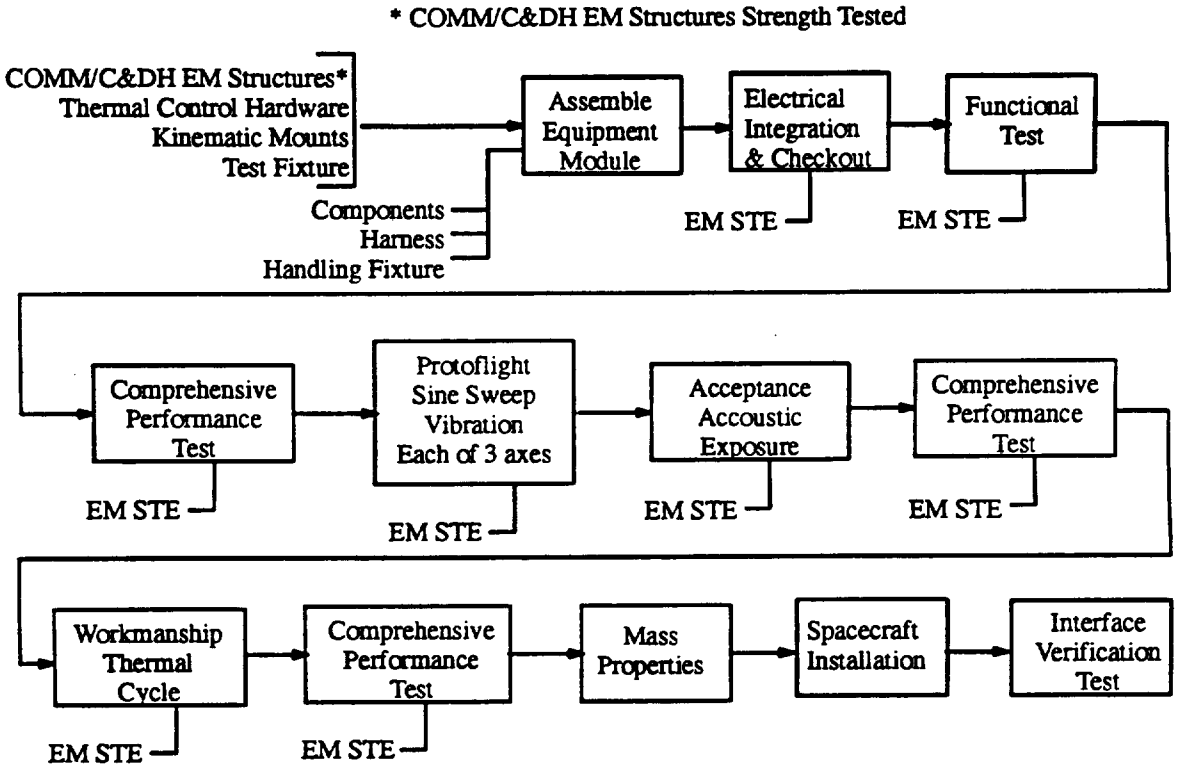

Figure 12. COMM/C&DH EM Integration And Test Flow

5. Bus Data Unit
6. Heater Control Electronics, Heaters and Sensors
7. Array Drive Electronics
8. Spacecraft Controls Computer "A"
9. Spacecraft Controls Computer "B"
10. Master Oscillator "A"
11. Master Oscillator "B"
12. S–band Transponder "A"
13. S–band Transponder "B"
14. Band Reject Filter "A"
15. Band Reject Filter "B"
16. S–band Interface Unit

4.1.6.2 Functional Test (FT)

A functional test of the COMM/C&DH Equipment Module shall be performed to test command and data paths between components and to exercise prime and redundant hardware.

4.1.6.3 Comprehensive Performance Test (CPT)

A CPT shall be performed to verify that the COMM/C&DH Equipment Module meets the performance requirements in all operational and contingency modes, as well as verifying all command and data paths and all redundant hardware.

4.1.6.4 Interface Verification Test

An IVT shall be performed to verify the proper Equipment Module interfaces to the Spacecraft Bus. It verifies all power, ground, and signal connectors are properly mated and that there is signal presence on the proper connectors.

4.1.7 Formal Test Verification

Formal verification of the performance requirements of the COMM/C&DH Equipment Module are in the Verification Matrix, Attachment A. The Verification Matrix identifies the verification method as specified herein and the level at which tests are conducted. The COMM/C&DH Equipment Module shall be tested according to the COMM/C&DH EM Test Plan, PN20008745.

4.2 Quality Conformance Inspections

The COMM/C&DH Equipment Module shall be exposed to verification conditions which represent those environments encountered throughout the ground phase and flight mission. The environmental conditions and levels of exposure are defined in the Verification Specification for the

Earth Observing System (VRD–110), PS20005404, Section 4. There are four methods which may be used individually or in combination to verify each requirements in Section 3. These methods, defined as inspection (I), analysis (A), demonstration (D), and test (T) are defined in the Verification Specification for the Earth Observing System (VRD–110), PS20005404, Section 4.

4.2.1 Method of Verification

4.2.1.1 Inspection

Inspection may be used to verify design and construction requirements, drawing compliance, or specific physical dimensions of the equipment module. Inspection is a method of verification of physical characteristics that determines compliance without the use special laboratory equipment, procedures, test support items, or services. Inspection uses standard methods such as visual gauges, etc., to verify compliance with requirements. Inspection also includes the review of design documents, material lists, code, plans, etc., to verify that requirements have been met.

4.2.1.2 Analysis

Analytical techniques may be used, in lieu of testing, to verify compliance to specified requirements, either alone or in combination with test. The selected techniques may include, typically, system engineering analysis, statistics, qualitative analysis, analog modeling, and computer simulation.

4.2.1.3 Demonstration

Demonstration is a qualitative method of verification that evaluates the properties of the subject equipment by observation. Demonstration is used with or without special test equipment or instrumentation to verify required characteristics such as operational functioning human engineering features, service and access features, transportability, and displayed data.

4.2.1.4 Test

Test is a quantitative method of verification wherein performance requirements are verified by measurement during and after the controlled application of functional and environmental stimuli. These measurements may require the use of laboratory equipment, recorded data, procedures, test support items, or services.

4.2.1.5 Classification of Characteristics

Classification of characteristics as critical, major or minor shall be as defined in MIL–STD–109.

4.2.1.6 Test Equipment

[1] Existing test equipment shall be used wherever practical.

[2] Where new test equipment is required to test units which are physically or functionally identical or similar, the equipment shall be designed to perform its task(s) on each element of that group, where practical.

4.2.1.6.1 Test Equipment Safety Features

[1] Test equipment shall incorporate any safety interlocks or other safety features necessary to reduce the introduction of safety hazards by the test equipment.

[2] Any safety feature included in any Spacecraft test equipment shall give a visual, auditory, or electronic indication of activation when it is activated.

4.2.1.6.2 Test Equipment Verification

Unless otherwise specified herein, test equipment used to measure Communications or Command and Data Handling Subsystem performance characteristics shall be capable of demonstrating that

a. it will not impose environments on the tested item(s) beyond the levels called for in the Verification Specification, PS20005404, and

b. it is capable of imposing the test levels called for in the Verification Specification, PS20005404.

c. it is capable of meeting all the requirements imposed on it by the Ground Support Equipment Requirements Document, 20001430 (GSERD).

4.2.1.6.3 Test Equipment Calibration

[1] EM Test equipment shall be calibrated in accordance with the Performance Assurance Implementation Plan, 20005397.

(This page intentionally left blank.)

5 PREPARATION FOR DELIVERY

5.1 General

Interior and exterior shipping containers shall be marked in accordance with the Identification and Marking requirements of the General Interface Specification, IS20008501.

(This page intentionally left blank.)

6 NOTES

6.1 Definitions

None

6.2 Abbreviations and Acronyms

ADE	Array Drive Electronics
BCH	Bose–Chaudhuri–Hocquenghem
BDU	Bus Data Unit
CADU	Channel Access Data Unit
CCSDS	Consultative Committee for Space Data Systems
COMM	Communications
CSS	Coarse Sun Sensor
CTIU	Command/Telemetry Interface Unit
C&DH	Command and Data Handling
C&T	Command and Telemetry
DAS	Direct Access System
EAS	Electrical Accommodations Subsystem
EM	Equipment Module
EOS	Earth Observing System
EMC	Electromagnetic Compatibility
ESD	Electrical Static Discharge
FARM	Frame Acceptance Reporting Mechanism
FDB	Fuse Distribution Box
GN	Ground Network
GSE	Ground Support Equipment
HCE	Heater Control Electronics
HGA	High Gain Antenna

ICD	Interface Control Document
KSA	Ku–band Single Access
LHCP	Left Hand Circular Polarization
Mbps	Megabits Per Second
MHz	Megahertz
MO	Master Oscillator
MSFC	Marshall Space Flight Center
NASA	National Aeronautics and Space Administration
PAML	Program Approved Materials and Process List
PAPL	Program Approved Parts List
PN	Psuedorandom Noise
RD	Requirements Document
RT	Remote Terminal
RTS	Relative Time Sequence
QPSK	Quadrature Phase Shift Keying
RHCP	Right Hand Circular Polarization
SBIU	S–band Interface Unit
SBT	S–band Transponder
SCC	Spacecraft Controls Computer
SMS	Structures and Mechanisms Subsystem
STDN	Spaceflight Tracking and Data Network
TBD	To Be Determined
TBR	To Be Reviewed
TBS	To Be Supplied
TCS	Thermal Control Subsystem
TDRSS	Tracking and Data Relay Satellite System
TONS	TDRSS Onboard Navigational System
Vdc	Volts, Direct Current

6.3 Exceptions to the GIS and GIIS

None. (Nameplates and Product Marking requirements in GIS are supplemented by paragraph 3.3.4 herein.)

6.4 Requirements Traceability Matrix

Requirements in Section 3 of this specification were derived from the source document, PS20005396, Contract End Item (CEI) Specification. Compliance to these requirements are shown in the Requirements Traceability Matrix, Attachment B, provided under separate cover.

(This page intentionally left blank.)

APPENDIX I

10 ELECTRICAL CONNECTOR CONTACT ASSIGNMENTS

The electrical interface bracket for the Comm/C&DH EM will be as shown in Figure 13. The electrical connector contact assignments will be as shown in the following table.

Note: The Contact Number assignments are (TBR–2).

Note: The Circuit Categories are (TBD–2).

Connector Designation: ***CX1J01*** **Part Number:** ***20034844PJ1D18N***		**Connector Function:** ***Power Input*** **Connector Type:** ***18 pin circular***		
Contact Number	**Function Name**	**Circuit Category**	**Source / Destination**	
1	CFDB A 120V POS–1		PDU	CFDB
2	CFDB A 120V RTN–1		CFDB	PDU
3	CFDB A 120V POS–2		PDU	CFDB
4	CFDB A 120V RTN–2		CFDB	PDU
5	CEM FAULT GND A		CFDB	GND
Connector Designation: ***CX1J02*** **Part Number:** ***20034844PJ1D18A***		**Connector Function:** ***Power Input*** **Connector Type:** ***18 pin circular***		
Contact Number	**Function Name**	**Circuit Category**	**Source / Destination**	
1	CFDB B 120V POS–1		PDU	CFDB
2	CFDB B 120V RTN–1		CFDB	PDU
3	CFDB B 120V POS–2		PDU	CFDB
4	CFDB B 120V RTN–2		CFDB	PDU
5	CEM FAULT GND B		CFDB	GND

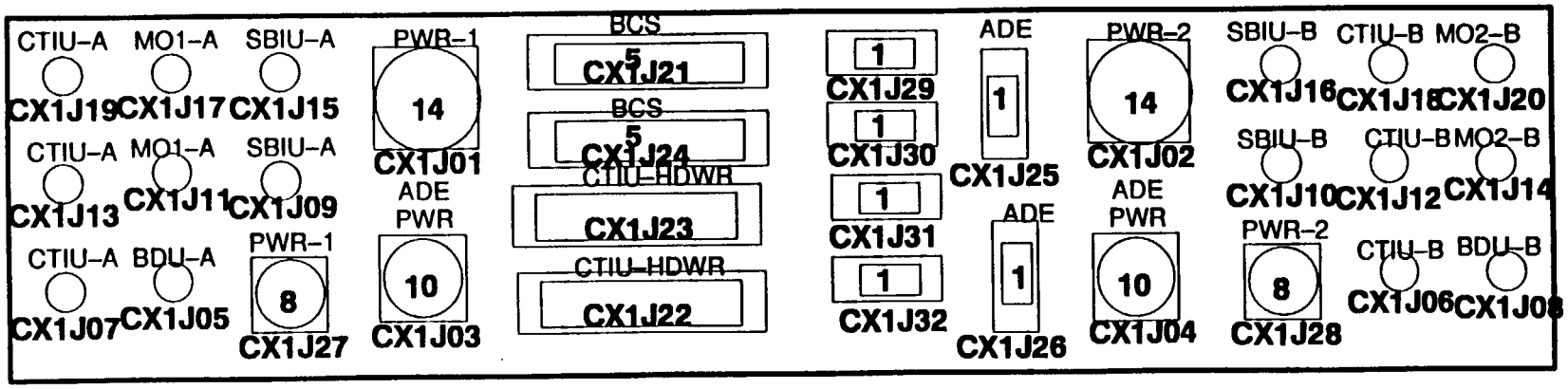

1/2 Scale; Width = 4.0 Inches, Length= 17.0 Inches

Figure 13. Comm/C&DH EM Interface Bracket

Connector Designation: *CX1J03*		Connector Function: *SA Drive Tlm (A)*		
Part Number: *20038047PJ1B35N*		Connector Type: *13 socket circular*		
Contact Number	**Function Name**	**Circuit Category**	**Source / Destination**	
1	SAD POS POT1 +5 VOLT		SAD	ADE
2	SAD POS POT1 +5 VOLT RTN		ADE	SAD
3	SAD POS POT1 SIGNAL		SAD	ADE
4	S/A DEPLOYED A		SAD	ADE
5	S/A DEPLOYED A RTN		ADE	SAD
6	SAD MOTOR DRIVE A		ADE	SAD
7	SAD PHASE A RTN A		SAD	ADE
8	SAD PHASE B RTN A		SAD	ADE
9	SAD PHASE C RTN A		SAD	ADE
10	SAD PHASE D RTN A		SAD	ADE

Connector Designation: *CX1J04*		Connector Function: *SA Drive Tlm (B)*		
Part Number: *20038047PJ1B35A*		Connector Type: *13 socket circular*		
Contact Number	**Function Name**	**Circuit Category**	**Source / Destination**	
1	SAD POS POT2 +5 VOLT		SAD	ADE
2	SAD POS POT2 +5 VOLT RTN		ADE	SAD
3	SAD POS POT2 SIGNAL		SAD	ADE
4	S/A DEPLOYED B		SAD	ADE
5	S/A DEPLOYED B RTN		ADE	SAD
6	SAD MOTOR DRIVE B		ADE	SAD
7	SAD PHASE A RTN B		SAD	ADE
8	SAD PHASE B RTN B		SAD	ADE
9	SAD PHASE C RTN B		SAD	ADE
10	SAD PHASE D RTN B		SAD	ADE

Connector Designation: *CX1J05* Part Number: *20040889P1*		Connector Function: *C&T Bus (A)* Connector Type: TRIAX (1553) *PIN*		
Contact Number	**Function Name**	**Circuit Category**	**Source / Destination**	
1	CTIU1 C&T Bus A		C&T Bus A	CTIU1
2	CTIU2 C&T Bus A		C&T Bus A	CTIU2
3	CBDUA C&T Bus A STUB 1		C&T Bus A	CBDUA
4	CBDUB C&T Bus A STUB 1		C&T Bus A	CBDUB
5	SCC1 C&T Bus A		C&T Bus A	SCC1
6	SCC2 C&T Bus A		C&T Bus A	SCC2

Connector Designation: *CX1J06* Part Number: *20040889P1*		Connector Function: *LRS–B* Connector Type: *TRIAX (1553)*		
Contact Number	**Function Name**	**Circuit Category**	**Source / Destination**	
1				CTIU1

Connector Designation: *CX1J07* Part Number: *20040889P1*		Connector Function: *LRS–A* Connector Type: *TRIAX (1553)*		
Contact Number	**Function Name**	**Circuit Category**	**Source / Destination**	
1				CTIU1

Connector Designation: *CX1J08* Part Number: *20040889P1*		Connector Function: *C&T Bus (B)* Connector Type: TRIAX (1553) *PIN*		
Contact Number	**Function Name**	**Circuit Category**	**Source / Destination**	
1	CTIU1 C&T Bus B		C&T Bus B	CTIU1
2	CTIU2 C&T Bus B		C&T Bus B	CTIU2
3	CBDUA C&T Bus B STUB 1		C&T Bus B	CBDUA
4	CBDUB C&T Bus B STUB 1		C&T Bus B	CBDUB
5	SCC1 C&T Bus B		C&T Bus B	SCC1
6	SCC2 C&T Bus B		C&T Bus B	SCC2

Connector Designation: *CX1J09*		Connector Function: *NADIR OMNI*		
Part Number: *G3R42*		Connector Type: SMA JACK		
Contact Number	**Function Name**	**Circuit Category**	**Source / Destination**	
1	SBIU SBAND 1 NADIR OMNI		SBIU	NADIR OMNI
Connector Designation: *CX1J10*		**Connector Function:** *S–BAND RHCP*		
Part Number: *G3R42*		**Connector Type:** SMA JACK		
Contact Number	**Function Name**	**Circuit Category**	**Source / Destination**	
1	SBIU SBAND 1 HGA RHCP PORT		SBIU	HGA RHCP PORT
Connector Designation: *CX1J11*		**Connector Function:** *MO1 KSAM1 CLK*		
Part Number: *2036–5014–00*		**Connector Type:** SMA RG303		
Contact Number	**Function Name**	**Circuit Category**	**Source / Destination**	
1	MO1 KSAM1 4MHZ CLK		MO1	KSAM1
2	MO1 KSAM1 4MHZ CLK RTN		KSAM1	MO1
Connector Designation: *CX1J12*		**Connector Function:** *LRS–B*		
Part Number: *20040889P1*		**Connector Type:** *TRIAX (1553)*		
Contact Number	**Function Name**	**Circuit Category**	**Source / Destination**	
1				CTIU2
Connector Designation: *CX1J13*		**Connector Function:** *LRS–A*		
Part Number: *20040889P1*		**Connector Type:** *TRIAX (1553)*		
Contact Number	**Function Name**	**Circuit Category**	**Source / Destination**	
1				CTIU2
Connector Designation: *CX1J14*		**Connector Function:** *MO2 KSAM1 CLK*		
Part Number: *2036–5014–00*		**Connector Type:** SMA RG303		
Contact Number	**Function Name**	**Circuit Category**	**Source / Destination**	
1	MO2 KSAM1 4MHZ CLK		MO2	KSAM1
2	MO2 KSAM1 4MHZ CLK RTN		KSAM1	MO2

Connector Designation: *CX1J15*		Connector Function: *ZENITH OMNI*		
Part Number: *G3R42*		Connector Type: SMA JACK		
Contact Number	**Function Name**	**Circuit Category**	**Source / Destination**	
1	SBIU SBAND 1 ZENITH OMNI		SBIU	ZENITH OMNI
Connector Designation: *CX1J16*		**Connector Function:** *S–BAND LHCP*		
Part Number: *G3R42*		**Connector Type:** SMA JACK		
Contact Number	**Function Name**	**Circuit Category**	**Source / Destination**	
1	SBIU SBAND 1 HGA LHCP PORT		SBIU	HGA LHCP PORT
Connector Designation: *CX1J17*		**Connector Function:** MO1 DASM1 CLK		
Part Number: *2036–5014–00*		**Connector Type:** SMA RG303		
Contact Number	**Function Name**	**Circuit Category**	**Source / Destination**	
1	MO1 DASM1 4MHZ CLK		MO1	DASM1
2	MO1 DASM1 4MHZ CLK RTN		DASM1	MO1
Connector Designation: *CX1J18*		**Connector Function:** *FREQUENCY BUS (2)*		
Part Number: (TBD–3)		**Connector Type:** *TROMPETER*		
Contact Number	**Function Name**	**Circuit Category**	**Source / Destination**	
1				CTIU1
1				CTIU2
Connector Designation: *CX1J19*		**Connector Function:** *FREQUENCY BUS (1)*		
Part Number: (TBD–4)		**Connector Type:** *TROMPETER*		
Contact Number	**Function Name**	**Circuit Category**	**Source / Destination**	
1				CTIU1
1				CTIU2

Connector Designation: *CX1J20* Part Number: *2036–5014–00*		Connector Function: *MO2 KSAM2 CLK* Connector Type: SMA RG303		
Contact Number	**Function Name**	**Circuit Category**	**Source / Destination**	
1	MO2 KSAM2 4MHZ CLK		MO2	KSAM2
2	MO2 KSAM2 4MHZ CLK RTN		KSAM2	MO2

Connector Designation: *CX1J21* Part Number: *20042415P1050SA*	Connector Function: *Link CTIU1 to DCU1 and DCU2; SBT1 Lock Override Test; Hardline Tlm to UMB* Connector Type: *50 socket rectangular*			
Contact Number	**Function Name**	**Circuit Category**	**Source / Destination**	
1	DCU1 REC A CADUS		CTIU1	DCU1
2	DCU1 REC A CADUS RTN		DCU1	CTIU1
3	CTIU1 PB A CADUS		CTIU1	DCU1
4	CTIU1 PB A CADUS RTN		DCU1	CTIU1
5	DCU2 REC A CADUS		CTIU1	DCU2
6	DCU2 REC A CADUS RTN		DCU2	CTIU1
7	CTIU2 PB A CADUS		CTIU1	DCU2
8	CTIU2 PB A CADUS RTN		DCU2	CTIU1
9	SBT1 HARDLINE CMD		UMB	SBT1
10	SBT1 HARDLINE CMD RTN		SBT1	UMB
11	SBT1 LOCK OVERRIDE		UMB	SBT1
12	SBT1 LOCK OVERRIDE RTN		SBT1	UMB
13	CTIU1 1K CADUS TO LV		CTIU1	LV
14	CTIU1 1K CADUS TO LV RTN		LV	CTIU1
15	CTIU1 HSKP TLM CH 1		CTIU1	LV
16	CTIU1 HSKP TLM CH 1 RTN		LV	CTIU1
17	CTIU1 HSKP TLM CH 2		CTIU1	LV
18	CTIU1 HSKP TLM CH 2 RTN		LV	CTIU1

Connector Designation: *CX1J22* Part Number: *20042415P1104SA*		Connector Function: *HD CMD (2)* Connector Type: *104 socket rectangular*		
Contact Number	**Function Name**	**Circuit Category**	**Source / Destination**	
1	CTIU2 ABDU A ON CMD		CTIU2	ABDU
2	CTIU2 ABDU A ON CMD RTN		ABDU	CTIU2
3	CTIU2 ABDU A OFF CMD		CTIU2	ABDU
4	CTIU2 ABDU A OFF CMD RTN		ABDU	CTIU2
5	CTIU2 ABDU B ON CMD		CTIU2	ABDU
6	CTIU2 ABDU B ON CMD RTN		ABDU	CTIU2
7	CTIU2 ABDU B OFF CMD		CTIU2	ABDU
8	CTIU2 ABDU B OFF CMD RTN		ABDU	CTIU2
9	CTIU2 DBDU A ON CMD		CTIU2	DBDU
10	CTIU2 DBDU A ON CMD RTN		DBDU	CTIU2
11	CTIU2 DBDU A OFF CMD		CTIU2	DBDU
12	CTIU2 DBDU A OFF CMD RTN		DBDU	CTIU2
13	CTIU2 DBDU B ON CMD		CTIU2	DBDU
14	CTIU2 DBDU B ON CMD RTN		DBDU	CTIU2
15	CTIU2 DBDU B OFF CMD		CTIU2	DBDU
16	CTIU2 DBDU B OFF CMD RTN		DBDU	CTIU2
17	CTIU2 EBDU A ON CMD		CTIU2	EBDU
18	CTIU2 EBDU A ON CMD RTN		EBDU	CTIU2
19	CTIU2 EBDU A OFF CMD		CTIU2	EBDU

Connector Designation: *CX1J22* Part Number: *20042415P1104SA*		Connector Function: *HD CMD (2)* Connector Type: *104 socket rectangular*		
Contact Number	**Function Name**	**Circuit Category**	**Source / Destination**	
20	CTIU2 EBDU A OFF CMD RTN		EBDU	CTIU2
21	CTIU2 EBDU B ON CMD		CTIU2	EBDU
22	CTIU2 EBDU B ON CMD RTN		EBDU	CTIU2
23	CTIU2 EBDU B OFF CMD		CTIU2	EBDU
24	CTIU2 EBDU B OFF CMD RTN		EBDU	CTIU2
25	CTIU2 GBDU A ON CMD		CTIU2	GBDU
26	CTIU2 GBDU A ON CMD RTN		GBDU	CTIU2
27	CTIU2 GBDU A OFF CMD		CTIU2	GBDU
28	CTIU2 GBDU A OFF CMD RTN		GBDU	CTIU2
29	CTIU2 GBDU B ON CMD		CTIU2	GBDU
30	CTIU2 GBDU B ON CMD RTN		GBDU	CTIU2
31	CTIU2 GBDU B OFF CMD		CTIU2	GBDU
32	CTIU2 GBDU B OFF CMD RTN		GBDU	CTIU2
33	CTIU2 NBDU A ON CMD		CTIU2	NBDU
34	CTIU2 NBDU A ON CMD RTN		NBDU	CTIU2
35	CTIU2 NBDU A OFF CMD		CTIU2	NBDU
36	CTIU2 NBDU A OFF CMD RTN		NBDU	CTIU2
37	CTIU2 NBDU B ON CMD		CTIU2	NBDU
38	CTIU2 NBDU B ON CMD RTN		NBDU	CTIU2

Connector Designation: *CX1J22* Part Number: *20042415P1104SA*		Connector Function: *HD CMD (2)* Connector Type: *104 socket rectangular*		
Contact Number	**Function Name**	**Circuit Category**	**Source / Destination**	
39	CTIU2 NBDU B OFF CMD		CTIU2	NBDU
40	CTIU2 NBDU B OFF CMD RTN		NBDU	CTIU2
41	CTIU2 PBDU A ON CMD		CTIU2	PBDU
42	CTIU2 PBDU A ON CMD RTN		PBDU	CTIU2
43	CTIU2 PBDU A OFF CMD		CTIU2	PBDU
44	CTIU2 PBDU A OFF CMD RTN		PBDU	CTIU2
45	CTIU2 PBDU B ON CMD		CTIU2	PBDU
46	CTIU2 PBDU B ON CMD RTN		PBDU	CTIU2
47	CTIU2 PBDU B OFF CMD		CTIU2	PBDU
48	CTIU2 PBDU B OFF CMD RTN		PBDU	CTIU2
49	CTIU2 RBDU A ON CMD		CTIU2	RBDU
50	CTIU2 RBDU A ON CMD RTN		RBDU	CTIU2
51	CTIU2 RBDU A OFF CMD		CTIU2	RBDU
52	CTIU2 RBDU A OFF CMD RTN		RBDU	CTIU2
53	CTIU2 RBDU B ON CMD		CTIU2	RBDU
54	CTIU2 RBDU B ON CMD RTN		RBDU	CTIU2
55	CTIU2 RBDU B OFF CMD		CTIU2	RBDU
56	CTIU2 RBDU B OFF CMD RTN		RBDU	CTIU2
57	CTIU2 UBDU A ON CMD		CTIU2	UBDU
58	CTIU2 UBDU A ON CMD RTN		UBDU	CTIU2

Connector Designation: *CX1J22* Part Number: *20042415P1104SA*		Connector Function: *HD CMD (2)* Connector Type: *104 socket rectangular*		
Contact Number	**Function Name**	**Circuit Category**	**Source / Destination**	
59	CTIU2 UBDU A OFF CMD		CTIU2	UBDU
60	CTIU2 UBDU A OFF CMD RTN		UBDU	CTIU2
61	CTIU2 UBDU B ON CMD		CTIU2	UBDU
62	CTIU2 UBDU B ON CMD RTN		UBDU	CTIU2
63	CTIU2 UBDU B OFF CMD		CTIU2	UBDU
64	CTIU2 UBDU B OFF CMD RTN		UBDU	CTIU2
65	CTIU2 UBDU A ON CMD		CTIU2	UBDU
66	CTIU2 UBDU A ON CMD RTN		UBDU	CTIU2
67	CTIU2 UBDU A OFF CMD		CTIU2	UBDU
68	CTIU2 UBDU A OFF CMD RTN		UBDU	CTIU2
69	CTIU2 UBDU B ON CMD		CTIU2	UBDU
70	CTIU2 UBDU B ON CMD RTN		UBDU	CTIU2
71	CTIU2 UBDU B OFF CMD		CTIU2	UBDU
72	CTIU2 UBDU B OFF CMD RTN		UBDU	CTIU2
73	CTIU2 WBDU A ON CMD		CTIU2	WBDU
74	CTIU2 WBDU A ON CMD RTN		WBDU	CTIU2
75	CTIU2 WBDU A OFF CMD		CTIU2	WBDU
76	CTIU2 WBDU A OFF CMD RTN		WBDU	CTIU2
77	CTIU2 WBDU B ON CMD		CTIU2	WBDU

Connector Designation: *CX1J22* Part Number: *20042415P1104SA*		Connector Function: *HD CMD (2)* Connector Type: *104 socket rectangular*		
Contact Number	**Function Name**	**Circuit Category**	**Source / Destination**	
78	CTIU2 WBDU B ON CMD RTN		WBDU	CTIU2
79	CTIU2 WBDU B OFF CMD		CTIU2	WBDU
80	CTIU2 WBDU B OFF CMD RTN		WBDU	CTIU2
81	MO2 DASM2 4MHZ CLK		MO2	DASM2
82	MO2 KSAM2 4MHZ CLK		MO2	KSAM2

Connector Designation: *CX1J23* Part Number: *20042415P1104SA*		Connector Function: *HD CMD (1)* Connector Type: *104 socket rectangular*		
Contact Number	**Function Name**	**Circuit Category**	**Source / Destination**	
1	CTIU1 ABDU A ON CMD		CTIU1	ABDU
2	CTIU1 ABDU A ON CMD RTN		ABDU	CTIU1
3	CTIU1 ABDU A OFF CMD		CTIU1	ABDU
4	CTIU1 ABDU A OFF CMD RTN		ABDU	CTIU1
5	CTIU1 ABDU B ON CMD		CTIU1	ABDU
6	CTIU1 ABDU B ON CMD RTN		ABDU	CTIU1
7	CTIU1 ABDU B OFF CMD		CTIU1	ABDU
8	CTIU1 ABDU B OFF CMD RTN		ABDU	CTIU1
9	CTIU1 DBDU A ON CMD		CTIU1	DBDU
10	CTIU1 DBDU A ON CMD RTN		DBDU	CTIU1
11	CTIU1 DBDU A OFF CMD		CTIU1	DBDU
12	CTIU1 DBDU A OFF CMD RTN		DBDU	CTIU1
13	CTIU1 DBDU B ON CMD		CTIU1	DBDU
14	CTIU1 DBDU B ON CMD RTN		DBDU	CTIU1
15	CTIU DBDU B OFF CMD		CTIU1	DBDU
16	CTIU DBDU B OFF CMD RTN		DBDU	CTIU1
17	CTIU1 EBDU A ON CMD		CTIU1	EBDU
18	CTIU1 EBDU A ON CMD RTN		EBDU	CTIU1
19	CTIU1 EBDU A OFF CMD		CTIU1	EBDU

Connector Designation: *CX1J23* Part Number: *20042415P1104SA*		Connector Function: *HD CMD (1)* Connector Type: *104 socket rectangular*		
Contact Number	**Function Name**	**Circuit Category**	**Source / Destination**	
20	CTIU1 EBDU A OFF CMD RTN		EBDU	CTIU1
21	CTIU1 EBDU B ON CMD		CTIU1	EBDU
22	CTIU1 EBDU B ON CMD RTN		EBDU	CTIU1
23	CTIU1 EBDU B OFF CMD		CTIU1	EBDU
24	CTIU1 EBDU B OFF CMD RTN		EBDU	CTIU1
25	CTIU1 GBDU A ON CMD		CTIU1	GBDU
26	CTIU1 GBDU A ON CMD RTN		GBDU	CTIU1
27	CTIU1 GBDU A OFF CMD		CTIU1	GBDU
28	CTIU1 GBDU A OFF CMD RTN		GBDU	CTIU1
29	CTIU1 GBDU B ON CMD		CTIU1	GBDU
30	CTIU1 GBDU B ON CMD RTN		GBDU	CTIU1
31	CTIU1 GBDU B OFF CMD		CTIU1	GBDU
32	CTIU1 GBDU B OFF CMD RTN		GBDU	CTIU1
33	CTIU1 NBDU A ON CMD		CTIU1	NBDU
34	CTIU1 NBDU A ON CMD RTN		NBDU	CTIU1
35	CTIU1 NBDU A OFF CMD		CTIU1	NBDU
36	CTIU1 NBDU A OFF CMD RTN		NBDU	CTIU1
37	CTIU1 NBDU B ON CMD		CTIU1	NBDU
38	CTIU1 NBDU B ON CMD RTN		NBDU	CTIU1

Connector Designation: *CX1J23* Part Number: *20042415P1104SA*		Connector Function: *HD CMD (1)* Connector Type: *104 socket rectangular*		
Contact Number	**Function Name**	**Circuit Category**	**Source / Destination**	
39	CTIU1 NBDU B OFF CMD		CTIU1	NBDU
40	CTIU1 NBDU B OFF CMD RTN		NBDU	CTIU1
41	CTIU1 PBDU A ON CMD		CTIU1	PBDU
42	CTIU1 PBDU A ON CMD RTN		PBDU	CTIU1
43	CTIU1 PBDU A OFF CMD		CTIU1	PBDU
44	CTIU1 PBDU A OFF CMD RTN		PBDU	CTIU1
45	CTIU1 PBDU B ON CMD		CTIU1	PBDU
46	CTIU1 PBDU B ON CMD RTN		PBDU	CTIU1
47	CTIU1 PBDU B OFF CMD		CTIU1	PBDU
48	CTIU1 PBDU B OFF CMD RTN		PBDU	CTIU1
49	CTIU1 RBDU A ON CMD		CTIU1	RBDU
50	CTIU1 RBDU A ON CMD RTN		RBDU	CTIU1
51	CTIU1 RBDU A OFF CMD		CTIU1	RBDU
52	CTIU1 RBDU A OFF CMD RTN		RBDU	CTIU1
53	CTIU1 RBDU B ON CMD		CTIU1	RBDU
54	CTIU1 RBDU B ON CMD RTN		RBDU	CTIU1
55	CTIU1 RBDU B OFF CMD		CTIU1	RBDU
56	CTIU1 RBDU B OFF CMD RTN		RBDU	CTIU1
57	CTIU1 UBDU A ON CMD		CTIU1	UBDU
58	CTIU1 UBDU A ON CMD RTN		UBDU	CTIU1

Connector Designation: *CX1J23* Part Number: *20042415P1104SA*		Connector Function: *HD CMD (1)* Connector Type: *104 socket rectangular*		
Contact Number	**Function Name**	**Circuit Category**	**Source / Destination**	
59	CTIU1 UBDU A OFF CMD		CTIU1	UBDU
60	CTIU1 UBDU A OFF CMD RTN		UBDU	CTIU1
61	CTIU1 UBDU B ON CMD		CTIU1	UBDU
62	CTIU1 UBDU B ON CMD RTN		UBDU	CTIU1
63	CTIU1 UBDU B OFF CMD		CTIU1	UBDU
64	CTIU1 UBDU B OFF CMD RTN		UBDU	CTIU1
65	CTIU1 UBDU A ON CMD		CTIU1	UBDU
66	CTIU1 UBDU A ON CMD RTN		UBDU	CTIU1
67	CTIU1 UBDU A OFF CMD		CTIU1	UBDU
68	CTIU1 UBDU A OFF CMD RTN		UBDU	CTIU1
69	CTIU1 UBDU B ON CMD		CTIU1	UBDU
70	CTIU1 UBDU B ON CMD RTN		UBDU	CTIU1
71	CTIU1 UBDU B OFF CMD		CTIU1	UBDU
72	CTIU1 UBDU B OFF CMD RTN		UBDU	CTIU1
73	CTIU1 WBDU A ON CMD		CTIU1	WBDU
74	CTIU1 WBDU A ON CMD RTN		WBDU	CTIU1
75	CTIU1 WBDU A OFF CMD		CTIU1	WBDU
76	CTIU1 WBDU A OFF CMD RTN		WBDU	CTIU1
77	CTIU1 WBDU B ON CMD		CTIU1	WBDU

Connector Designation: *CX1J23* Part Number: *20042415P1104SA*		Connector Function: *HD CMD (1)* Connector Type: *104 socket rectangular*		
Contact Number	**Function Name**	**Circuit Category**	**Source / Destination**	
78	CTIU1 WBDU B ON CMD RTN		WBDU	CTIU1
79	CTIU1 WBDU B OFF CMD		CTIU1	WBDU
80	CTIU1 WBDU B OFF CMD RTN		WBDU	CTIU1
81	MO1 DASM1 4MHZ CLK		MO1	DASM1
82	MO1 KSAM1 4MHZ CLK		MO1	KSAM1

Connector Designation: *CX1J24* Part Number: *20042415P1050SA*		Connector Function: *Link CTIU2 to DCU1 and DCU2; SBT2 Lock Override Test; Hardline Tlm to UMB* Connector Type: *50 socket rectangular*		
Contact Number	**Function Name**	**Circuit Category**	**Source / Destination**	
1	DCU1 REC A CADUS		CTIU2	DCU1
2	DCU1 REC A CADUS RTN		DCU1	CTIU2
3	CTIU2 PB A CADUS		CTIU2	DCU1
4	CTIU2 PB A CADUS RTN		DCU1	CTIU2
5	DCU2 REC A CADUS		CTIU2	DCU2
6	DCU2 REC A CADUS RTN		DCU2	CTIU2
7	CTIU2 PB A CADUS		CTIU2	DCU2
8	CTIU2 PB A CADUS RTN		DCU2	CTIU2
9	SBT2 HARDLINE CMD		UMB	SBT2
10	SBT2 HARDLINE CMD RTN		SBT2	UMB
11	SBT2 LOCK OVERRIDE		UMB	SBT2
12	SBT2 LOCK OVERRIDE RTN		SBT2	UMB
13	CTIU2 1K CADUS TO LV		CTIU1	LV
14	CTIU2 1K CADUS TO LV RTN		LV	CTIU2
15	CTIU2 HSKP TLM CH 1		CTIU2	LV
16	CTIU2 HSKP TLM CH 1 RTN		LV	CTIU2
17	CTIU2 HSKP TLM CH 2		CTIU2	LV
18	CTIU2 HSKP TLM CH 2 RTN		LV	CTIU2

Connector Designation: *CX1J25* Part Number: *20042415P1009SA*		Connector Function: *ADE (A) Tlm to ACE* Connector Type: *9 socket rectangular*		
Contact Number	**Function Name**	**Circuit Category**	**Source / Destination**	
1	ADEA SAFEMODE IND		ACE	ADE
2	ADEA SAFEMODE IND RTN		ADE	ACE
3	ADEA CSS SIG		ACE	ADE
4	ADEA CSS SIG RTN		ADE	ACE
5	ADEA SA AT INDEX		ACE	ADE
6	ADEA SA AT INDEX RTN		ADE	ACE

Connector Designation: *CX1J26* Part Number: *20042415P1009SA*		Connector Function: *ADE (B) Tlm to ACE* Connector Type: *9 socket rectangular*		
Contact Number	**Function Name**	**Circuit Category**	**Source / Destination**	
1	ADEB SAFEMODE IND		ACE	ADE
2	ADEB SAFEMODE IND RTN		ADE	ACE
3	ADEB CSS SIG		ACE	ADE
4	ADEB CSS SIG RTN		ADE	ACE
5	ADEB SA AT INDEX		ACE	ADE
6	ADEB SA AT INDEX RTN		ADE	ACE

Connector Designation: *CX1J27* Part Number: *20038047PJ1A35N*		Connector Function: *Power Input to HGA Hinge and SAD A Heaters* Connector Type: *6 pin circular*		
Contact Number	**Function Name**	**Circuit Category**	**Source / Destination**	
1	HGA HINGE HTR A POS		HGA HINGE HCE	HGA HINGE HTR A
2	HGA HINGE HTR A RTN		HGA HINGE HTR A	HCE HINGE HCE
3	SAD HTR A POS		SAD HCE	SAD HTR A
4	SAD HTR A RTN		SAD HTR A	SAD HCE

Connector Designation: *CX1J28* Part Number: *20038047PJ1A35A*		Connector Function: *Power Input to HGA Hinge and SAD B Heaters* Connector Type: *6 socket circular*		
Contact Number	**Function Name**	**Circuit Category**	**Source / Destination**	
1	HGA HINGE HTR B POS		HGA HINGE HCE	HGA HINGE HTR B
2	HGA HINGE HTR B RTN		HGA HINGE HTR B	HGA HINGE HCE
3	SAD HTR B POS		SAD HCE	SAD HTR B
4	SAD HTR B RTN		SAD HTR B	SAD HCE

Connector Designation: *CX1J29* Part Number: *20042415P1009SA*		Connector Function: *HGA Hinge and SAD A Temp Telemetry and Heater Control* Connector Type: *9 socket rectangular*		
Contact Number	**Function Name**	**Circuit Category**	**Source / Destination**	
1	HGA HINGE TEMP A TLM		CBDU	HGA HINGE HTR A
2	HGA HINGE TEMP A TLM RTN		HGA HINGE HTR A	CBDU
3	HGA HINGE CONTRL THMS A POS		HGA HINGE HCE	HGA HINGE HTR A
4	HGA HINGE CONTRL THMS A RTN		HGA HINGE HTR A	HGA HINGE HCE
5	SAD TEMP A TLM		CBDU	SAD HTR A
6	SAD TEMP A TLM RTN		SAD HTR A	CBDU
7	SAD CONTRL THMS A POS		SAD HCE	SAD HTR A
8	SAD CONTRL THMS A RTN		SAD HTR A	SAD HCE

Connector Designation: *CX1J30* Part Number: *20042415P1009SA*		Connector Function: *HGA Hinge and SAD B Heater Control and Temperature Telemetry* Connector Type: *9 socket rectangular*		
Contact Number	**Function Name**	**Circuit Category**	**Source / Destination**	
1	HGA HINGE TEMP B TLM		CBDU	HGA HINGE HTR B
2	HGA HINGE TEMP B TLM RTN		HGA HINGE HTR B	CBDU
3	HGA HINGE CONTRL THMS B POS		HGA HINGE HCE	HGA HINGE HTR B
4	HGA HINGE CONTRL THMS B RTN		HGA HINGE HTR B	HGA HINGE HCE
5	SAD TEMP B TLM		CBDU	SAD HTR B
6	SAD TEMP B TLM RTN		SAD HTR B	CBDU
7	SAD CONTRL THMS B POS		SAD HCE	SAD HTR B
8	SAD CONTRL THMS B RTN		SAD HTR B	SAD HCE

Connector Designation: *CX1J31* Part Number: *20042415P1009SA*		Connector Function: *C&DH Test Points* Connector Type: *9 socket rectangular*		
Contact Number	**Function Name**	**Circuit Category**	**Source / Destination**	
1	GSE CTIU1 RESET		GSE	CTIU1
2	GSE CTIU1 RESET RTN		CTIU1	GSE

Connector Designation: *CX1J32* **Part Number:** *20042415P1009*		**Connector Function:** *C&DH Test Points* **Connector Type:** *9 pin rectangular*		
Contact Number	**Function Name**	**Circuit Category**	**Source / Destination**	
1	GSE CTIU2 RESET		GSE	CTIU2
2	GSE CTIU2 RESET RTN		CTIU2	GSE

PS200085 71
CAGE No. 49671
30 July 1993

Performance Specification
Direct Access System (DAS) Panel
for EOS–AM Spacecraft
(SP–801)

Prepared under:
Contract NAS5–32500
NASA Goddard Space Flight Center
Greenbelt, Maryland 20771

Prepared by:
Martin Marietta Corporation
Astro Space
P.O. Box 800
Princeton, New Jersey 08543–0800

DCC072993

(This page intentionally left blank.)

REVISION LOG

This log identifies those portions of this document which have been revised since the original issue. Revised portions of each page, for the current revision only, are identified by marginal striping.

Revision	Paragraph Number(s) Affected	Rev. Date	Approval
Initial Issue		07/30/93	CM/GSR

(This page intentionally left blank.)

TABLE OF CONTENTS

SECTION / PARAGRAPH	TITLE	PAGE
1	SCOPE	1
2	APPLICABLE DOCUMENTS	3
2.1	Government Documents	3
2.1.1	Military	3
2.1.2	NASA	3
2.2	Martin Marietta Astro Space Documents	4
2.2.1	Specifications	4
2.2.2	Standards	5
2.2.3	Drawings	6
2.2.4	Other Publications	6
3	REQUIREMENTS	7
3.1	Critical Item Definition	7
3.1.1	DAS Panel Functional Description	8
3.1.2	Interface Definition	10
3.1.2.1	Electrical Interfaces	10
3.1.2.2	Spacecraft Command and Telemetry Bus Interface	11
3.1.2.3	Mechanical Interface	13
3.1.2.4	Thermal Interface	14
3.1.3	Major Component List	15
3.2	Characteristics	16
3.2.1	Performance	16
3.2.1.1	Input Signal Performance Characteristics	16
3.2.1.2	Output Signal Performance Characteristics	16
3.2.1.3	Output Channel Performance Characteristics	18
3.2.2	Physical Characteristics	19
3.2.2.1	Mass	19
3.2.2.2	Power Consumption	19
3.2.2.3	Power Dissipation	19

TABLE OF CONTENTS (Continued)

SECTION / PARAGRAPH	TITLE	PAGE
3.2.2.4	Dimension	19
3.2.2.5	Transport and Storage	19
3.2.2.6	Integration and Test	20
3.2.2.7	Layout	21
3.2.2.8	Configuration	21
3.2.2.9	Natural Frequency	21
3.2.3	Reliability	21
3.2.4	Durability	22
3.2.5	Maintainability	22
3.2.6	Environmental Conditions	22
3.2.6.1	General	22
3.2.6.2	Sine Vibration	22
3.2.7	Transportability	22
3.3	Design and Construction	22
3.3.1	Materials, Processes, and Parts	23
3.3.2	Electric Fields	23
3.3.3	Magnetic Fields	23
3.3.4	Nameplates and Product Marking	23
3.3.5	Workmanship	24
3.3.6	Safety	24
3.3.7	Human Performance/Human Engineering	24
3.4	Documentation	25
3.4.1	Specifications	25
3.4.2	Drawings	25
3.4.3	Test Plans and Procedures	25
3.5	Precedence	25
4	QUALITY ASSURANCE PROVISIONS	27
4.1	General	27
4.1.1	Responsibility for Tests	27

TABLE OF CONTENTS (Continued)

SECTION / PARAGRAPH	TITLE	PAGE
4.1.2	Special Tests and Examinations	27
4.1.3	Reliability Test	27
4.1.4	Engineering Evaluation and Test	27
4.1.5	Protoflight Test	27
4.1.6	Installation Test and Checkout	28
4.1.6.1	Electrical Integration and Test (EIC)	28
4.1.6.2	Functional Test (FT)	29
4.1.6.3	Comprehensive Performance Test (CPT)	29
4.1.6.4	Interface Verification Test (IVT)	29
4.1.7	Formal Test Verification	29
4.2	Quality Conformance Inspections	29
4.2.1	Method of Verification	29
4.2.1.1	Inspection	29
4.2.1.2	Analysis	30
4.2.1.3	Demonstration	30
4.2.1.4	Test	30
4.2.1.5	Classification of Characteristics	30
4.2.1.6	Test Equipment	30
5	PREPARATION FOR DELIVERY	33
5.1	General	33
6	NOTES	35
6.1	Definitions	35
6.2	Abbreviations and Acronyms	35
6.3	Exceptions to the GIS and GIIS	37
6.4	Requirements Traceability Matrix	37

APPENDIX I

10	ELECTRICAL CONNECTOR CONTACT ASSIGNMENTS	39

LIST OF FIGURES

FIGURE	TITLE	PAGE
1	DAS Panel Layout	8
2	X–band Direct Access System (DAS) Block Diagram	9
3	DAS Panel Functional Electrical Interface Definition	11
4	DAS Panel Functional Spacecraft Power Bus Interface Definition	12
5	DAS Panel Functional Spacecraft Command and Telemetry Bus Interface Definition	12
6	DAS Panel Representative Component Layout	14
7	DAS Panel Integration and Test Flow	28
8	DAS Panel Interface Bracket	40

LIST OF TABLES

TABLE	TITLE	PAGE
I	DAS Panel Subsystem Functions	7
II	DAS Panel Major Component List	15
III	Output Frequency Stability	16
IV	Phase Noise	17
V	Spurious Out–of–Band Signal Limits	17
VI	Incidental AM	18
VII	Power Consumption (watts)	20

TBD LOG

ITEM	SECTION	PAGE	SUBJECT	RESP.	DUE
TBD–1	Table II	15	DAS Panel Thermal Blanket Doc #	W. Batten	1/96
TBD–2	Table II	15	Waveguide Switch Doc #	T. Milbourne	4/94
TBD–3	Table II	15	Tranmit Filter Doc #	T. Milbourne	4/94
TBD–4	Table II	15	X–band Wave guide/Cabling Doc #	T. Milbourne	4/94
TBD–5	Table VII	20	DAS Panel Heater Power	C. Scott	12/93
TBD–6	3.2.2.6	20	Ground Cooling	C. Scott/E. Shade	12/93
TBD–7	Appx. I	39	Circuit Categories	S. Holaday	9/93
TBD–8	Appx. I	39	Pin Assignments	S. Holaday	3/94

1 SCOPE

This specification establishes the performance, design, development, and test requirements for the Direct Access System (DAS) Panel critical item. The DAS Panel shall meet all the applicable requirements of the Contract End Item (CEI) Specification for the EOS Spacecraft, PS20005396 (SEP-101), throughout its design life. The principal requirement of modularity to facilitate Spacecraft construction, maintenance and serviceability is satisfied by this module design. The equipment module will be designed to facilitate producibility, integration, and accessibility to the internal components while minimizing weight. The equipment module will be modular to allow on-ground removal and replacement onto the Spacecraft core.

(This page intentionally left blank.)

2 APPLICABLE DOCUMENTS

All and only those documents referenced in Sections 3, 4, 5, and Appendices of the specification shall be listed in Section 2 of the specification. References are confined to documents currently available at the time of issuance of the current revision of this specification.

2.1 Government Documents

The following documents of the exact issue shown, form a part of this specification to the extent specified herein. In the event of a conflict between the documents referenced herein and the contents of this specification, the contents of this specification shall take precedence, except as defined in Section 3.6 herein.

2.1.1 Military

MSFC–SPEC–522	Design Criteria for Controlling Stress Corrosion
MIL–STD–129 10 January 1992	Marking for Shipment and Storage
MIL–STD–490 30 October 1968 Notice 1 – 1 February 1969 Notice 2 – 18 May 1972	Specification Practices
MIL–STD–889 (Rev. B) 4 March 1988	Dissimilar Metals
MIL–STD–1472 (Rev. D) 20 March 1991	Human Engineering Design Criteria for Military Systems, Equipment and Facilities
MIL–STD–1553 (Rev. B) 8 September 1986	Digital Time Division Command/Response Multiplex Data Bus
MIL–HDBK–5 (Rev. F) 1 December 1992	Metallic Materials and Elements for Aerospace Vehicle Structures
MIL–HDBK–17	Plastics for Aerospace Vehicles
WSMCR–127–1 December 1989	Western Space and Missile Center Range Safety Regulations

2.1.2 NASA

420–03–02 15 April 1992	General Instrument Interface Specification (GIIS)

420–05–02 8 November 1991	Performance Assurance Requirements for the EOS Observatories
421–10–01 1 May 1991	Requirements Document for the EOS–AM Spacecraft
NHB 5300.4 (3A–1) December 1976	Requirements for Soldered Electrical Connections
NHB 5300.4 (3G) April 1985	Requirements for Interconnecting Cables, Harnesses, and Wiring
NHB 5300.4 (3H) May 1984	Requirements for Crimping and Wire Wrap
NHB 5300.4 (3I) May 1984	Requirements for Printed Wiring Boards
NHB 5300.4 (3J) April 1985	Requirements for Conformal Coating and Staking of Printed Wiring Boards and Electronic Assemblies
NHB 5300.4 (3K) January 1986	Design Requirements for Rigid Printed Wiring Boards and Assemblies

2.2 Martin Marietta Astro Space Documents

Unless otherwise specified, the following documents of the latest issue form a part of this specification to the extent specified herein. In the event of a conflict between the documents referenced herein and the contents of this specification, the contents of this specification shall take precedence.

2.2.1 Specifications

20001430	Ground Support Equipment Requirements Document (SEP–104)
IS20008501	General Interface Specification for the Earth Observing System (ICD–101)
PN20001412	EOS–A Spacecraft Contamination Control Plan (SEP–107)
PN20005397	EOS Performance Assurance Implementation Plan (PAIP) (PA–100)
PS20001415	Structures and Mechanisms Subsystem (SMS) Performance Specification
PS20005396	EOS–AM Spacecraft Contract End Item Specification (SEP–101)

PS20005404	Verification Specification for the Earth Observing System (VRD–110)
PS20008543	Master Oscillator Performance Specification
PS20008549	Thermal Control Subsystem (TCS) Performance Specification
PS20008553	Thermal Subsystem Performance Specification
PS20008568	Bus Data Unit (BDU) Performance Specification
PS20008573	DAS Upconverter Development Performance Specification
PS20008575	Science Formatting Equipment Performance Specification
PS20008580	Communications Subsystem Specification for the EOS Spacecraft
PS20008589	DAS Modulator Performance Specification
PS20008590	DAS Transmitter Performance Specification
PS20008636	Electrical Accommodations Subsystem (EAS) Performance Specification
PS20008694	Fuse and Distribution Board (FDB) Performance Specification
PS20003627	Earth Sensor Electronics Assembly (SP–602)
PS20008785	Heater Control Electronics
PS20008569	Command/Telemetry Interface Unit (CTIU)
PS20008570	Spacecraft Control Computer (SCC)
PS20008543	Master Oscillator (MO)
PS20008590	DAS SSPA Development Specification
Source:	Martin Marietta Astro Space P. O. Box 800 Princeton, NJ 08543–0800

2.2.2 Standards

S32534 (Rev. E)	Identification Marking

Source:	Martin Marietta Astro Space P. O. Box 800 Princeton, NJ 08543–0800

2.2.3 Drawings

20008536	EOS–AM Spacecraft Observatory Specification Tree
20008571	DAS Panel Assembly Drawing
Source:	Martin Marietta Astro Space P. O. Box 800 Princeton, NJ 08543–0800

2.2.4 Other Publications

20005397	Performance Assurance Implementation Plan
20008536	EOS–AM Spacecraft Specification Tree
20008540	Logistics Plan
20008541	EOS–AM Spacecraft Equipment Planning Diagram
20008681	DAS Panel Harness Assembly Drawing
EOS–DN–COM–014	X–band Design Approach
ICD20008571	DAS Panel Interface Control Document
PL20008648	Program Approved Parts List (PA–325)
PL20008650	Program Approved Materials and Processes List (PA–460)
PN20005404	Verification Plan for the Earth Observing System (VRD–110)
PN20005869	Electromagnetic Compatibility Control Plan (SEP–106)
PN20008571	DAS Panel Test Plan
Source:	Martin Marietta Astro Space P. O. Box 800 Princeton, NJ 08543–0800

3 REQUIREMENTS

The DAS Panel shall meet all performance requirements specified herein under all combinations of environmental conditions and input signals described, and after exposure to the launch environment described herein. All requirements are End–of–Life (EOL) specifications unless otherwise stated.

3.1 Critical Item Definition

The DAS Panel contains elements of several Spacecraft subsystems. These subsystems and their major functions performed within the EM are described in Table I.

Table I. DAS Panel Subsystem Functions

Subsystem and Performance Specification	Major EM Subsystem Functions
Command and Data Handling Subsystem (C&DH) PS20008567	- Provides standardized data interfaces to the Instruments - Provides high–rate data formatting, routing, recording and playback - Provides a telemetry data backup recording function
Communications Subsystem (COM) PS20008580	- Translates intermediate frequency output from DAS modulators to X–band - Amplifies signal to required power level - Filters signal to prevent possible interference with instruments and routes signal to X–band antenna
Electrical Power Subsystem (EPS) PS20004749	- Provides power distribution and fusing for all local 120 volt users via fuse distribution box
Thermal Control Subsystem (TCS) PS20008549	- Provides heaters, sensors, and control for maintaining EM temperatures
Electrical Accommodations Subsystem PS20008636	- Provides the harness and connections for electrical components - Grounding and signal reference connections.
Structures and Mechanisms Subsystem PS20001415	- Provides mounting and protection for subsystem components - Provides a thermal path to carry dissipated component power

3.1.1 DAS Panel Functional Description

The DAS panel contains X–band RF transmission electronics for the direct broadcast, direct downlink, and direct playback services, and associated thermal and C&DHS interface equipment. Figure 1 shows the layout of the DAS Panel. The components on the DAS Panel consist of two parallel strings composed of one DAS Upconverter and one DAS SSPA. Components in series with the strings include a string–select waveguide switch, one DAS transmission filter assembly, and an output waveguide (for DAS antenna interfacing). The DAS Upconverters are powered by the 5 Vdc provided by the DAS SSPA EPC. The DAS Heater Control Electronics (HCE) are powered by the 120 Vdc Feeds A & B directly. In addition to DAS antenna interface, DAS panel also provides FDB (120 Vdc) and BDU (C&T) interfaces to the Earth Sensor Assembly (ESA), mounted on the –Z panel.

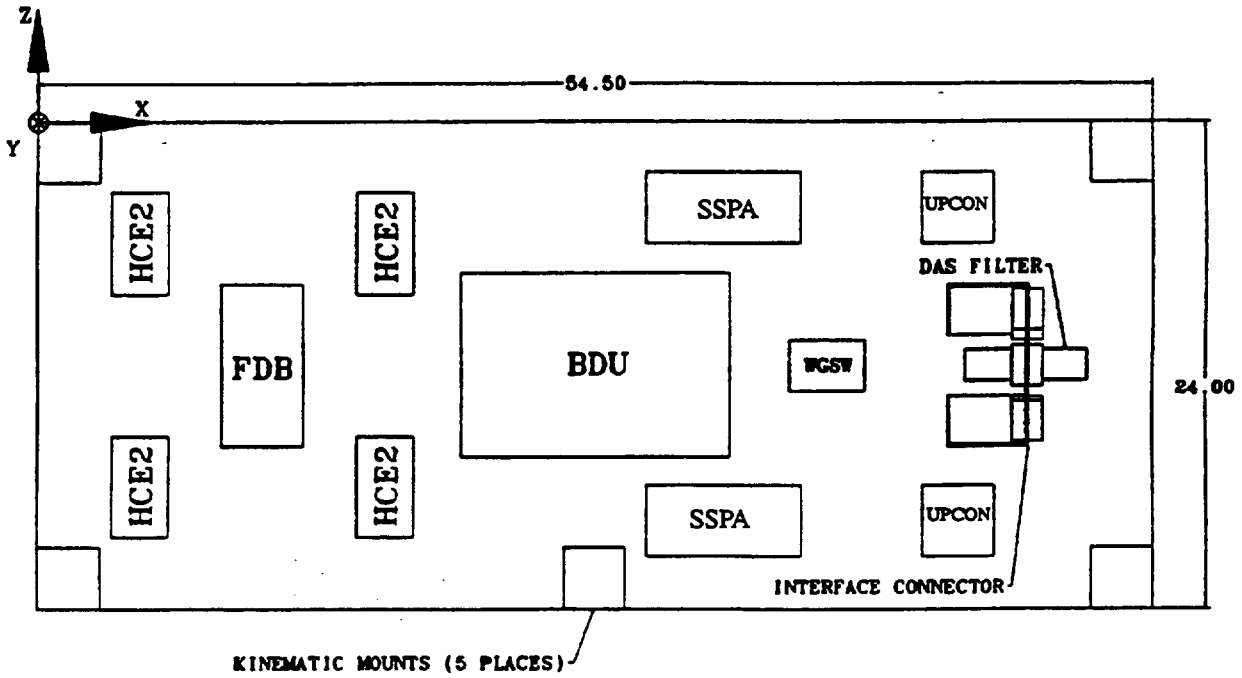

Legend:

SSPA	Solid State Power Amplifier
BDU	Bus Data Unit
FDB	Fuse Distribution Box
RF	Radio Frequency
UPCON	Upconverter
WGSW	Wave Guide Switch

Figure 1. DAS Panel Layout

The DAS Panel downlinks data generated by the EOS spacecraft scientific instruments directly to X–band earth ground terminals at a maximum data rate of 150 Mbps. The data generated by the EOS spacecraft scientific instruments is sent to the DAS Panel via the DAS Modulator. This data can be real time data, or data stored in solid state recorders for later transmission. The DAS Panel houses all electronic, thermal, and control equipment for the direct services. A functional block diagram of the DAS Panel signal flow is shown in Figure 2.

The digital data from the C&DH subsystem is received by the DAS Panel modulator, where it is reclocked and differentially encoded using Non–Return to Zero Mark (NRZ–M) format. A Pseudorandom Bit Stream Generator (PBSG) is used to generate a known, fixed, and repeatable NRZ–M data bit stream for ground test and on–orbit verification of the DAS Panel. The 4 MHz Master Oscillator (MO) signal is used to clock the PBSG. The modulator encodes the NRZ–M signal

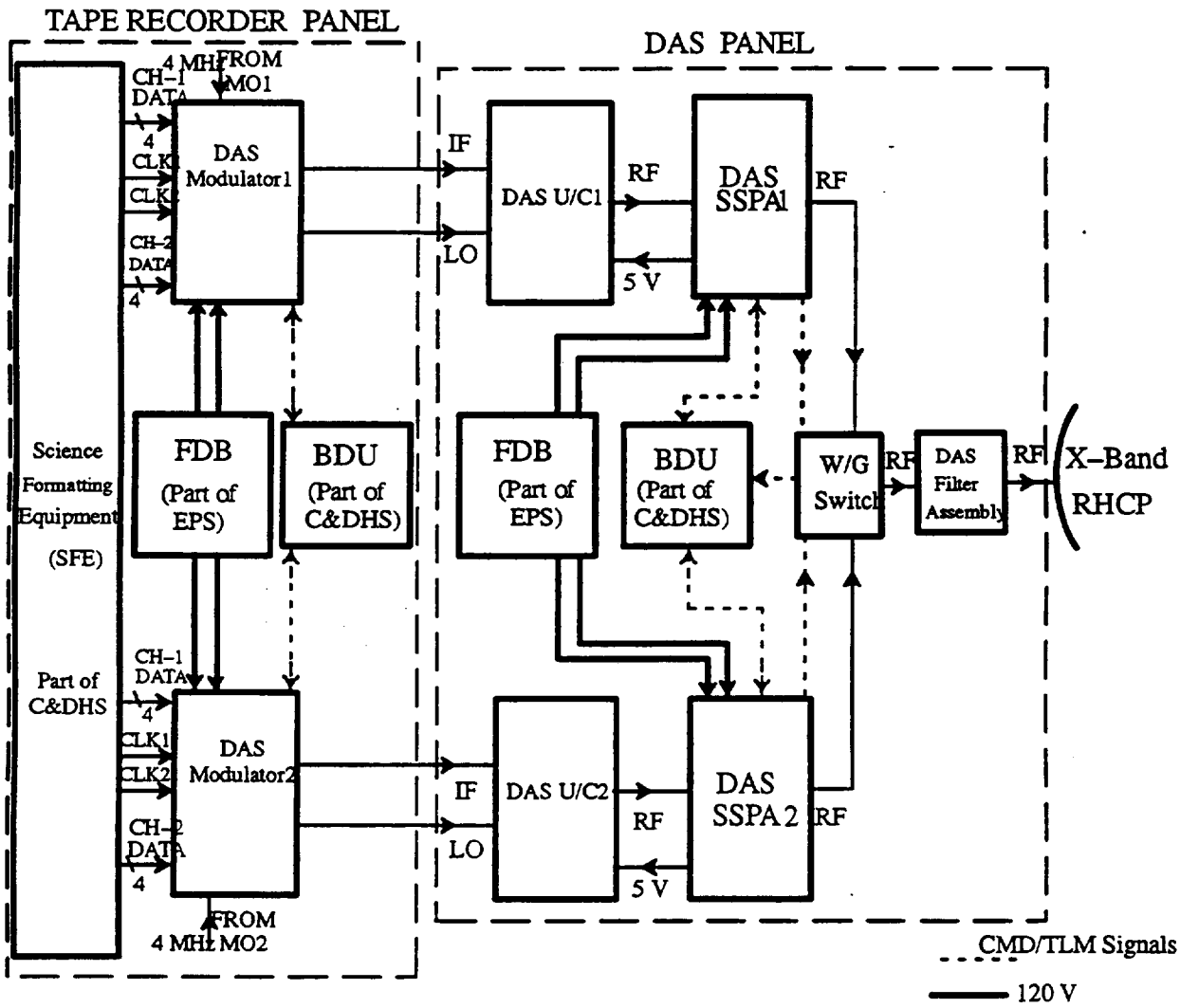

Figure 2. X–band Direct Access System (DAS) Block Diagram

using a rate r=1/2, constraint length k=7 convolutional scheme. The convolutional encoder output is modulated using either Staggered Quadrature Phase Shift–Keying (SQPSK), or Staggered Unbalanced–QPSK (SU–QPSK) modulation, depending on the mode of operation.

The output of the modulator is sent to the upconverter, where it is frequency translated from an Intermediate Frequency (IF) to X–band. A frequency source contained in the upconverter is used to generate the local oscillator required by the modulator. The output of the upconverter is sent to the Power Amplifier (PA) for final amplification to the required power level. At the output of the PA, a waveguide switch is used to select the output of either redundant equipment chain. Redundant equipment chains are used to increase the reliability of the DAS Panel, and assure that no credible single point failure can cause the loss of both paths. Before being sent to the shaped antenna, the signal is filtered to prevent interference with instruments on–board the EOS–AM Spacecraft, and other operational systems, such as the Deep Space Network (DSN). DAS services at X–band through the shaped antenna operate independently of the High Gain Antenna (HGA), and therefore serve as a backup to Tracking and Data Relay Satellite System (TDRSS) services through the HGA at Ku–band.

3.1.2 Interface Definition

The DAS Panel interfaces, and all included components shall meet the requirements of Sections 3, 4, and 5, of the General Interface Specification (GIS), IS20008501. Exceptions shall be explicitly noted in either the component specification or this document.

3.1.2.1 Electrical Interfaces

Electrical connections between and among the components of all subsystems within the module are part of the EM harness design.

[1] An electrical interface connector bracket attached to the +Z panel shall support all EM module harness interface connectors required to mate with the bus harness. The DAS Panel functional electrical interfaces are shown in Figure 3.

[2] The DAS Panel electrical interface shall meet the requirements of Section 3 of the GIS (IS20008501) regarding power, grounds, standard signal interfaces, test points, and connector and pin allocations.

[3] All electrical connections between the spacecraft and the DAS Panel shall be accomplished through the use of interconnecting cables as described in the DAS Panel Harness Installation Drawing, 20038244.

[4] All electrical connections between the spacecraft and the DAS Panel shall occur along the +X edge of the DAS Panel, except for test point connections, which shall connect directly to the component boxes. The DAS Panel shall provide and accept, as appropriate, the spacecraft bus interface signals defined in Appendix III.

[5] These cables and connections shall meet the harness and construction requirements of the Electrical Accommodation Subsystem (EAS) Performance Specification, PS20008636.

[6] The DAS Panel shall meet the requirements specified for Spacecraft equipment in the Equipment/Subsystem EMI Requirements Section of the EMC Control Plan (PN20005869).

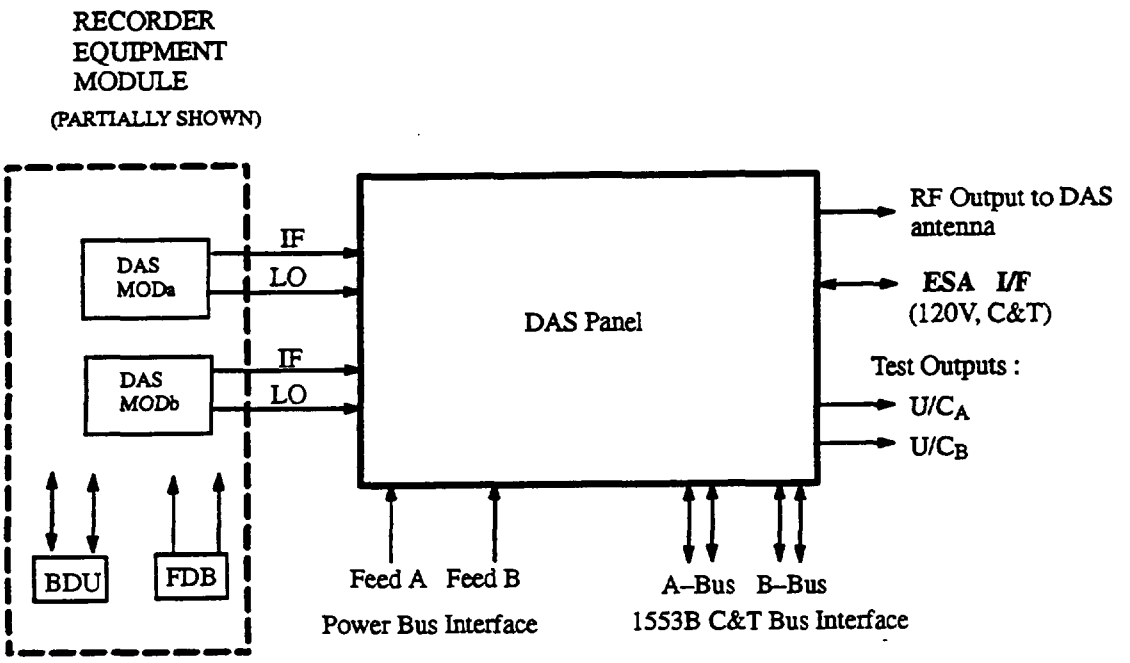

Figure 3. DAS Panel Functional Electrical Interface Definition

3.1.2.1.1 Spacecraft Power Bus Interface

[1] The DAS Panel shall accept prime power voltage at 120 volts dc with a regulation of ± 4%. Prime power is defined as the main Spacecraft bus power feeding the DAS Panel.

[2] The DAS Panel shall connect to both A and B power buses, as shown in Figure 4.

3.1.2.2 Spacecraft Command and Telemetry Bus Interface

[1] The DAS Panel interface to the Spacecraft Command and Telemetry Bus shall be via two sets of redundant MIL–STD–1553B Buses as shown in Figure 5.

[2] Both sides of the Bus Data Unit (BDU) shall interface to both the A and B Spacecraft Command and Telemetry Buses, and shall distribute commands to, and collect telemetry from, all components located on the DAS Panel as necessary. The command and telemetry lists for components located on the DAS Panel are given in Appendices 1 and 2, respectively.

[3] Interfaces with the C&T buses shall be over shielded, twisted pair transformer coupled connections.

[4] Separate triaxial connectors, one for both A and B buses, shall be provided at the external interface of the DAS Panel.

3.1.2.2.1 Command Inputs

The format, function and timing of the various commands for the EM components are listed in an appendix to the respective performance specification of each component.

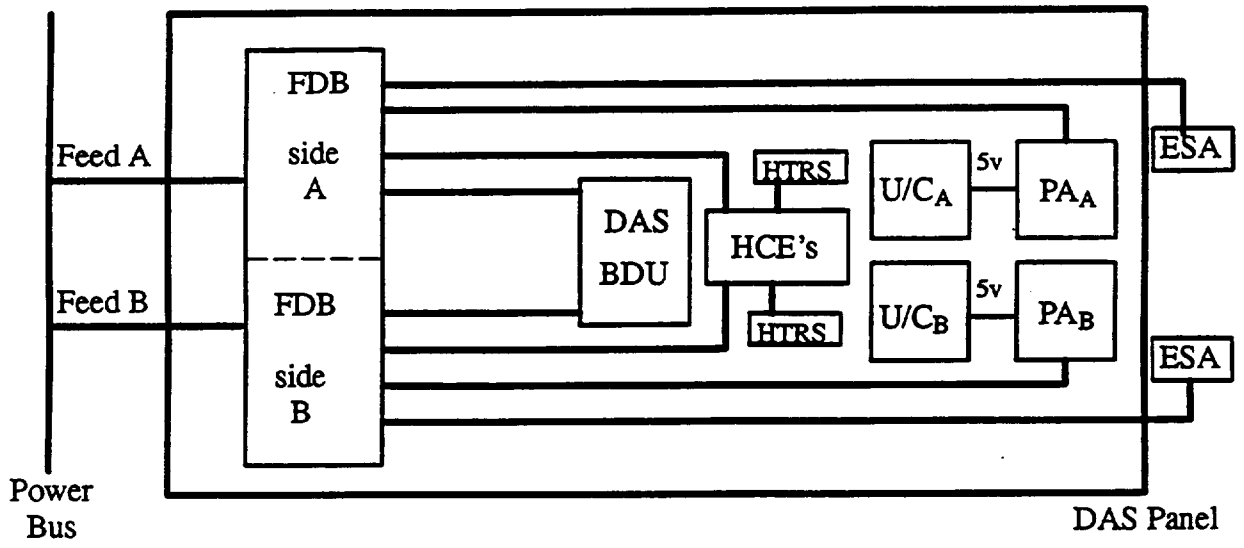

Figure 4. DAS Panel Functional Spacecraft Power Bus Interface Definition

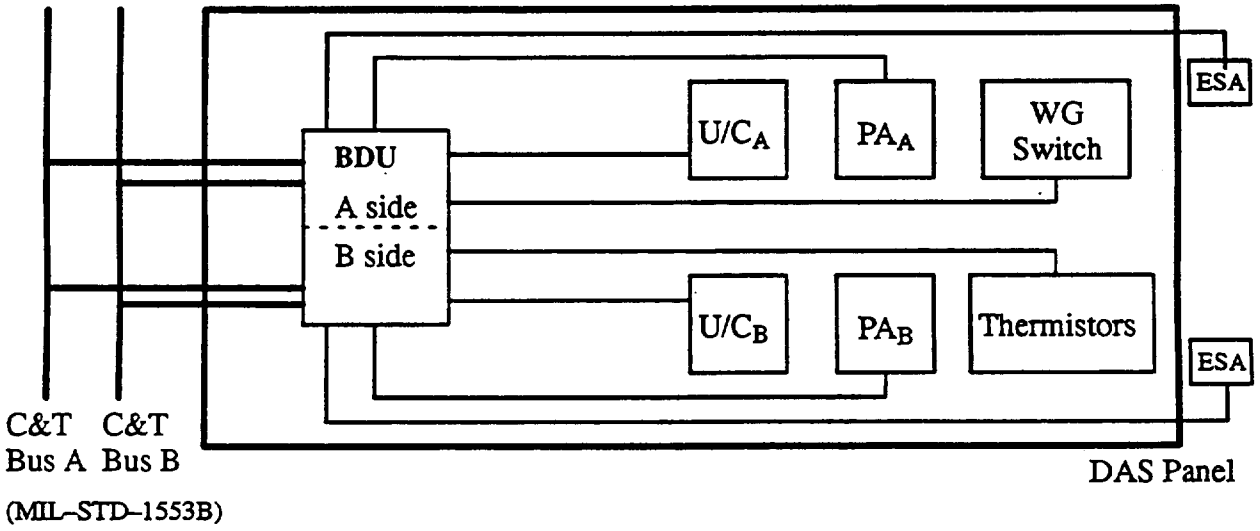

Figure 5. DAS Panel Functional Spacecraft Command and Telemetry Bus Interface Definition

3.1.2.2.2 Telemetry Outputs

The format, function and timing of the various telemetry words for the EM components are listed in an appendix to the respective performance specification of each component.

3.1.2.2.3 DAS Modulator Interface

The input signals to the DAS Panel from the DAS modulator located in the Recorder Equipment Module shall consist of two sets of IF and LO signals as shown in Figure 3.

3.1.2.2.4 Shaped Antenna Interface

The DAS Panel interface to the shaped antenna shall be a single RF output with the following characteristics:

a. Connection Type: WR–112 waveguide

b. Signal Level: 41.1 dBm ± 0.8 dB

c. Signal 3 dB Bandwidth: ≥ 375 MHz

d. Center Frequency: 8212.5 MHz ± 0.1 MHz

e. VSWR: < 1.5:1, WR–112

3.1.2.2.5 Input Test Signal Interface

[1] The input test signal cable shall interface directly to test equipment at the input port of the modulator, and shall be used for component and panel level testing only.

[2] Test inputs shall be terminated for flight. The modulator test input shall be used for performance testing of the output channel of each redundant equipment string. The output channel is defined as being from the switch after the SQPSK/SU–QPSK modulator to the waveguide output to the shaped antenna.

3.1.2.2.6 Output Test Signal Interface

[1] The output test signals shall interface directly to test equipment cables at the output port of the component, and shall be used for component and panel level testing only.

[2] Test outputs shall be terminated for flight an shall be used for functional testing of outputs only.

3.1.2.3 Mechanical Interface

[1] The DAS Panel shall comply with the requirements of the SMS Performance Specification (PS20001415) regarding coordinate systems, physical characteristics, design and construction, mounting, alignment, mechanisms, dynamic characteristics, structural criteria, and tooling. Figure 6 shows the relative position and direction of restraint axis of the DAS Panel kinematic mounts.

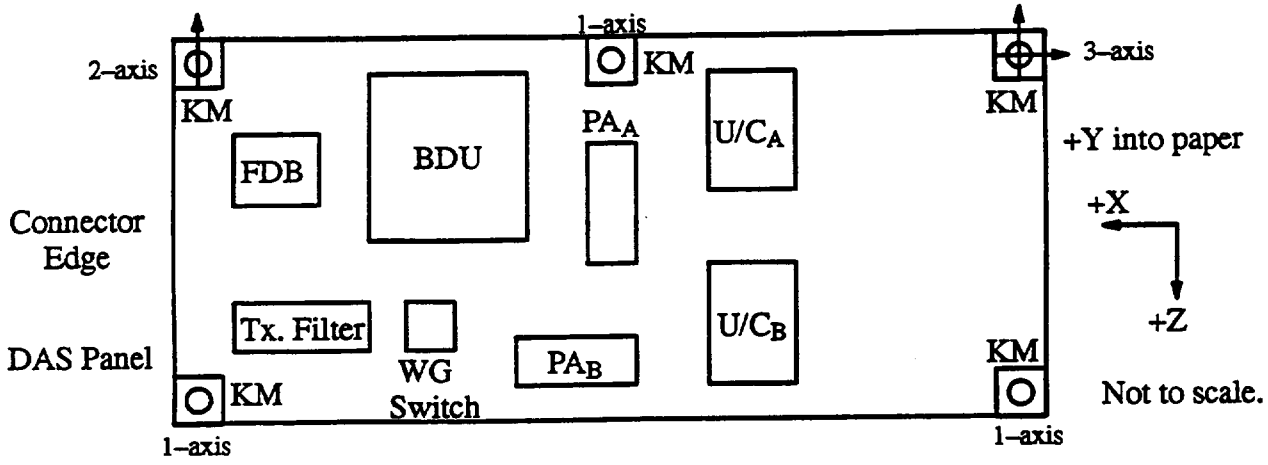

Figure 6. DAS Panel Representative Component Layout

[2] The DAS Panel shall be mounted to the primary structure via one 3–axis, one 2–axis, and three single axis kinematic mounts to provide stiffness and load paths back to the primary structure.

[3] The facesheet and honeycomb core of the structure shall be aluminum to facilitate thermal conduction to the radiator surfaces.

[4] The core shall be densified locally as required to provide adequate strength for component fasteners. The test criteria for adequate strength shall be that no component internal to the EM experiences accelerations during testing that is 1.25 times those defined in the Predicted Limits Loads figure of the General Interface Specification (GIS), IS20008501.

[5] The equipment module shall be designed such that it can be independently assembled, tested, attached and/or detached from the Spacecraft without requiring the disassembly of thermal control subsystem hardware.

[6] A connector bracket shall provide electrical interface to the spacecraft bus, and shall be located to facilitate integration and test access.

[7] Removal of the DAS Panel panel shall not require the removal of any other Spacecraft Equipment.

3.1.2.4 Thermal Interface

[1] Al thermal control hardware (heaters, MLI, etc.) in the recorder equipment module shall meet the thermal control hardware requirements of the GIS, IS20008501, Section 5, Thermal Interfaces,

[2] and as specified in the Thermal Control Subsystem (TCS) Performance Specification, PS20008549.

[3] The DAS Panel shall acquire, spread, and reject component heat to the external Spacecraft sink as necessary to maintain the temperature at each component interface to levels below the maximum limits specified in the Temperature Requirements table in Section 5 of the GIS, IS20008501.

[4] The heater control electronics (HCE2), using heaters and thermistors in the EM, shall maintain the temperature at each component interface to levels above the minimum limits specified in the Temperature Requirements table in Section 5 of the GIS, IS20008501.

[5] Heat dissipating components shall meet the EM/Component Conductive Interface requirements in the GIS, IS20008501, Section 5.

[6] A set of thermistors shall be connected to the BDU for the purpose of tracking thermal performance.

3.1.3 Major Component List

The major components of the DAS Panel according to subsystem, type, and quantity are listed in Table II.

Table II. DAS Panel Major Component List

Subsystem	Component	Document Number
Structures & Mechanisms	Radiator Panel Assembly +Y	20008910
	Kinematic Mounts	20001400
Thermal	DAS Panel Thermal Blanket	**(TBD–1)**
	DAS Panel Heaters	20008788
	Temperature Sensors	20008790
	Temperature Sensing Assembly	20008791
	HCE	20008785
Power	Fuse Distribution Board (FDB)	20008694
Cmd. & Data Hand.	Bus Data Unit (BDU)	20008568
Communications	Modulator	20008589
	Upconverter	20008573
	Power Amplifier (SSPA)	20008590
	Waveguide Switch	**(TBD–2)**
	Transmit Filter	**(TBD–3)**
	X–band Waveguide/Cabling	**(TBD–4)**
Electrical Accommodations	DAS Panel Power Harness	20008681
	DAS Panel C&DH Harness	20038261

3.2 Characteristics

3.2.1 Performance

3.2.1.1 Input Signal Performance Characteristics

The input signals to the DAS Panel shall consist of the redundant LO and IF signals, as provided by the DAS Modulators located in the Recorder Equipment Module. Performance characteristics of the input signals shall be referenced to the input of the particular DAS Panel component.

3.2.1.1.1 LO Signal

The input signal characteristics of the LO signal shall be as specified in the DAS Modulator Equipment Performance Specification, PS20008589.

3.2.1.1.2 IF Signal

The input signal characteristics of the modulated IF signal shall be as specified in the DAS Modulator Performance Specification, PS20008589.

3.2.1.2 Output Signal Performance Characteristics

The output signal from the DAS Panel shall consist of the output data signal. Performance characteristics of the output data signal shall be referenced to the flexible waveguide output to the shaped antenna.

3.2.1.2.1 Center Frequency

The center frequency of the output signal shall be 8212.5 MHz ± 0.1 MHz.

3.2.1.2.2 Frequency Stability

The frequency stability of the the output signal shall be within the limits specified in Table III.

Table III. Output Frequency Stability

Frequency Stability	Averaging Period
$\pm 3 \times 10^{-9}$	1 second
$\pm 1 \times 10^{-7}$	5 Hours
$\pm 3 \times 10^{-7}$	48 Hours

3.2.1.2.3 Phase Noise

The phase noise of the output signal shall be within the limits specified in Table IV.

Table IV. Phase Noise

Frequency Band	Phase Noise
1 Hz – 10 Hz	< 15° rms
10 Hz – 100 Hz	< 7.5° rms
100 Hz – 1 kHz	< 2.0° rms
1 kHz – 150 MHz	< 2.0° rms

3.2.1.2.4 Signal–to–Noise Plus Spurious Ratio

The signal–to–noise plus spurious ratio of the output signal shall be greater than 30 dB.

3.2.1.2.5 Gain Imbalance

The gain imbalance of the output signal shall be ≤ 0.25 dB in the absence of incidental AM and varying modulation.

3.2.1.2.6 Phase Imbalance

The phase imbalance of the output signal shall be ≤ 2.0°.

3.2.1.2.7 Untracked Spurious PM

The untracked spurious PM of the output signal shall be shall be ≤ 2.0° rms.

3.2.1.2.8 Spurious Out–of–Band

Spurious out–of–band signals of the output signal shall be within the limits specified in Table V.

Table V. Spurious Out–of–Band Signal Limits

Frequency Band	Rejection
≤ 7735 MHz	≥ 40 dB
7735 MHz to 7895 MHz	≥ 20 dB
7895 MHz to 7975 MHz	≥ 10 dB
7975 MHz to 8025 MHz	≥ 3 dB
8400 MHz to 8450 MHz	≥ 3 dB
8450 MHz to 8530 MHz	≥ 10 dB
8530 MHz to 8690 MHz	≥ 20 dB
8690 MHz to 10600 MHz	≥ 40 dB
10600 MHz to 10700 MHz	≥ 60 dB
16050 MHz to 16800 MHz	≥ 50 dB
24075 mHz to 25200 MHz	≥ 40 dB

3.2.1.2.9 Out–of–Band Power

The out–of–band power of the output signal shall be ≤ 2% of the total output signal power.

3.2.1.3 Output Channel Performance Characteristics

The output channel begins at the switch following the SQPSK/SU–QPSK modulator, and consists of the modulator output stage, upconverter, power amplifier, waveguide switch, transmit filter, and all cables, waveguide, and connectors. Performance characteristics of the output channel shall be referenced to the flexible waveguide output to the shaped antenna shown.

3.2.1.3.1 Bandwidth

The 3 dB bandwidth of the output channel shall be ≥ 375 MHz.

3.2.1.3.2 Gain Flatness

The gain of the output channel shall deviate by ≤ 0.3 dB over a ± 112.5 MHz reference bandwidth about the transmit center frequency.

3.2.1.3.3 Gain Slope

The gain of the output channel shall vary by ≤ 0.1 dB/MHz over a ± 112.5 MHz reference bandwidth about the transmit center frequency.

3.2.1.3.4 Incidental Amplitude Modulation (AM)

The incidental AM of the output channel shall be as specified in Table VI.

Table VI. Incidental AM

Frequency Band	Incidental AM
≤ 2 kHz	≤ 0.6%
2 kHz to 10 kHz	≤ 3%
≥ 10 kHz	≤ 5%

3.2.1.3.5 AM/AM

The AM/AM of the output channel shall be ≥ 0.5 dB/dB for the maximum output power level.

3.2.1.3.6 AM/Phase Modulation (PM)

At any signal frequency within the operating band, the change in phase of the output signal relative to the input test signal level shall be ≤ 12°/dB.

3.2.1.3.7 Phase Non–Linearity

The phase of the output channel shall not deviate from linear phase versus frequency by ≥ 3.0° over a ± 112.5 MHz reference bandwidth about the transmit center frequency.

3.2.2 Physical Characteristics

3.2.2.1 Mass

The mass of the DAS Panel shall not exceed 90 pounds.

3.2.2.2 Power Consumption

The components on the DAS Panel shall comply with the DC power consumption allocations given in Table VII. The maximum orbit average DC power consumed by the DAS Panel for the different EOS spacecraft operating modes shall not exceed the values specified in Table VII. Since the DAS Panel components will be powered and operational for the entire orbit period, the maximum orbit average power consumed is also the peak power consumed.

3.2.2.3 Power Dissipation

The thermal dissipation of the DAS Panel components shall be less than 59 watts.

3.2.2.4 Dimension

The dimensions of the DAS Panel shall not exceed the maximum dimensions given below, including connectors, as defined in Astro Space assembly drawing 20008571.

Length (X)	54.50 inches
Width (Y)	10.98 inches
Height (Z)	24.00 inches

3.2.2.5 Transport and Storage

[1] Accommodations for tie-downs, pallets, packaging, and other handling fixtures necessary for transport and storage of the equipment module shall be made to ease handling by and interaction with ground support equipment (GSE).

[2] The proper orientation for placing items in storage or transportation containers shall be obvious by design or marking.

[3] The DAS Panel shall supply test lift points capable of supporting the EM under any accompanying GSE under handling loads of 2g vertical per MIL–STD–1367A

[4] When four or more lift points are provided, any combination of three shall be capable of lifting the entire load.

Table VII. Power Consumption (watts)

Component	Ground Test and Launch/ Ascent Mode	Standby Mode	Delta–V Mode	Science Mode			Survival Mode	Safe Mode[4]	
				Max	Nomi-nal	Min[3]		Max	Min
POWER CONSUMPTION:									
BDU	9.2	9.2	9.2	9.2	9.2	9.2	9.2	9.2	9.2
SSPA	59.4	59.4	59.4	59.4	59.4	59.4	59.4	59.4	0
U/C(1)	0	0	0	0	0	0	0	0	0
DAS Filter	0	0	0	0	0	0	0	0	0
WG Switch	0	0	0	0	0	0	0	0	0
DAS Panel Harness	0	0	0	0	0	0	0	0	0
DAS Panel Structure	0	0	0	0	0	0	0	0	0
HSKP Heat Pipes (CCHP)	0	0	0	0	0	0	0	0	0
FDB	0	0	0	0	0	0	0	0	0
HCEs[2]	3.3	3.3	2.8	2.8	2.8	2.8	3.3	3.3	1.7
Margin				3.6	3.6	3.6			
Heaters (TBD–5)									
Total EM:				75	75	75			

(1) Powered via SSPA

(2) Does not include TCS heater power. Power shown is the sum of the allocations for the 4 HCE2s.

(3) Assumes missed TDRSS contact

(4) Assumed no Instruments collecting science data

3.2.2.6 Integration and Test

[1] The DAS Panel shall supply test points via the interface connector for modulated IF outputs.

[2] DAS Panel design shall ensure that access to the interface connector is sufficient to preclude the need for blind–mate connectors during installation on the Spacecraft Core.

[3] Ground cooling of the DAS Panel shall be accomplished by **(TBD–6)**.

[4] Items which for safety reasons may require rapid pre-launch maintenance shall be readily accessible.

[5] Items requiring frequent access during I&T or other prelaunch operations shall be accessible during I&T.

[6] Command and housekeeping telemetry capabilities shall be available both with and without RF links.

3.2.2.7 Layout

[1] Fuses for the DAS Panel shall be located, to the extent practical, such that it is possible to replace or view any fuse without requiring any disassembly of the DAS Panel.

[2] The DAS Panel layouts shall, to the extent practical, ensure that any component contained the Major Assembly can be removed without having to remove any other component.

[3] Component spacings shall provide adequate clearance for harness runs.

[4] All flight equipment which would require maintenance during a storage period of 5 years or less shall be accessible when the Spacecraft is in its stored configuration.

[5] All Spacecraft components which are fragile or otherwise susceptible to damage shall, where practical, be guarded or located so as to reduce this susceptibility.

[6] Sensitive adjustment controls and actuators shall be located or guarded to protect them from inadvertent perturbation.

[7] Component labeling shall be visible when the component is installed in the parent assembly or stowed. Labels shall be installed such that they are readable by the unaided human eye.

3.2.2.8 Configuration

The DAS Panel shall conform to Astro Space assembly drawing 20008571. These drawings shall define the following parameters:

a. Physical size

b. Mounting requirements and interfaces

c. External finishes

d. Electrical connector locations and sizes

e. Connector part number references

f. Connector reference designators

g. Method of identification.

3.2.2.9 Natural Frequency

The natural frequency of the DAS Panel shall be no less than the level specified in the appendix to the Structures and Mechanisms Subsystem Performance Specification, PS20001415.

3.2.3 Reliability

The probability of mission success, P_S, is allocated to the individual subsystems and their components. This information may be found in the applicable performance specifications.

3.2.4 Durability

The DAS Panel shall be designed to operate as specified herein for a five–year operational life.

3.2.5 Maintainability

[1] The DAS Panel shall be designed so that no regular maintenance will be required.

[2] Removable dust covers or other protective devices shall be provided over electrical connectors.

3.2.6 Environmental Conditions

3.2.6.1 General

[1] The DAS Panel shall be capable of meeting the requirements defined in this document after exposure to the handling, transportation, on–orbit environments, and launch environments defined in the GIS (IS20008501) Section 6,

[2] and to the test environments defined in the Verification Specification (VS), IS20005404.

[3] The DAS Panel shall be capable of meeting the requirements defined in this document after exposure to the handling, transportation, and launch environments defined in the GIS (IS20008501), Section 6.

[4] The DAS Panel shall be capable of meeting all performance requirements when operating in Spacecraft bay 1 on the –Y side of the Spacecraft.

[5] The EM shall comply with the requirements of the Contamination Control Plan, PN20001412.

3.2.6.2 Sine Vibration

[1] The Recorder EM shall remain undamaged during and following exposure to the sine vibration tests levels defined in the appendix to the Structures and Mechanisms Subsystem Performance Specification, PS20001415.

[2] The EM structure shall ensure that no component internal to the EM experiences accelerations greater than 1.25 times those defined in the Predicted Limit Loads figure of the General Interface Specification (GIS), IS20008501 when the EM experiences the test levels defined above.

3.2.7 Transportability

[1] The DAS Panel shall be capable of being transported by surface vehicle or aircraft.

[2] The transportation environment shall be controlled so as to be less severe than specified operating environment.

3.3 Design and Construction

[1] The DAS Panel design shall preclude improper installation to the Spacecraft.

[2] All electrical connectors shall be selected, sized, keyed, and/or marked such that incorrect attachment to the mating connector is prevented.

[3] All connectors shall attach such that the connectors cannot be inadvertently unlocked during ground operations.

[4] The EM design shall comply with the Design and Construction requirements specified in the GIS, IS20008501, for General requirements, Identification and Marking except for the Content paragraph, Finishes, Venting, Interchangeability, and Drawing Terms and Tolerances.

3.3.1 Materials, Processes, and Parts

All materials, processes, and parts utilized in the design and construction of the DAS Panel shall be selected and controlled in accordance with the requirements for Tooling in Section 4 of the GIS (IS20008501).

3.3.2 Electric Fields

[1] The DAS Panel shall comply with the electric and magnetic field emissions requirements in the Equipment Radiated Emissions (RE02, RE01/RE04) Section of the EMI/EMC control plan (PN20005869).

[2] The DAS Panel shall comply with the requirements regarding Radiated Susceptibility (RS03), electric fields Section, in the EMC control Plan (PN20005869).

[3] and the Radiated Susceptibility On–orbit Environments Section of the Equipment EMI requirements in the EMC Control Plan (PN20005869).

3.3.3 Magnetic Fields

[1] Components shall meet the magnetic field emission and

[2] magnetic properties requirements in the Equipment Radiated Emissions and Equipment Radiated Properties Sections respectively of the Equipment EMI Requirements in the EMC Control Plan, PN20005869.

[3] Components shall meet the requirements of the Radiated Susceptibility (RS01) Magnetic Fields Section of the Equipment EMI Requirements in the EMC Control Plan, PN20005869.

3.3.4 Nameplates and Product Marking

[1] The DAS Panel shall be marked for identification in accordance with the Identification Marking Standard, S32534 and ICD 20001411.

[2] Conspicuous markings or labels shall be affixed to the DAS Panel hardware or DAS Panel hardware packages.

[3] The identification shall contain, as a minimum, the following:

a. Martin Marietta Astro Space (Astro Space) Part Number

b. "DAS Panel"

c. Revision Level

d. Date of Manufacture

e. Contract Number.

[4] Applicable date–sensitive information shall also be identified.

[5] Hardware or equipment which is not suitable for use in flight, and which could be accidentally substituted for flight or flight spares hardware, shall be plainly marked and identified to indicate this status.

[6] Wires and cables for hardware shall not be identified by hot stamping directly onto primary or secondary (shield) insulation.

[7] All test points, adjustment devices, and alignments points shall be labeled.

[8] The proper orientation for placing items in storage or transportation containers shall be obvious by design or marking.

3.3.5 Workmanship

The construction and assembly of the DAS Panel shall be in accordance with the workmanship requirements as specified in NHB 5300.4 (3A–1, 3G–3K).

3.3.6 Safety

[1] The DAS Panel shall meet the factor of safety requirements specified in Paragraph 4.8.1 of the GIS, IS20008501.

[2] Where practical, hazards shall be eliminated or removed through design measures.

[3] Hazards which cannot be eliminated or removed shall, where practical, be prevented through incorporation and use of safety devices or features.

[4] Remaining hazards shall be controlled using warning devices and/or special procedures.

[5] Automated detection and safing of hazards which may cause personnel injury or loss of the Spacecraft shall be independent of those subsystems being monitored.

[6] Where practical, the detection and safing of lesser hazards shall also follow this practice.

[7] Design decisions shall accommodate compliance with safety requirements specified in this document before accommodating any other considerations (e.g., cost, schedule, performance)

3.3.7 Human Performance/Human Engineering

The DAS Panel shall comply with the human engineering criteria of MIL–STD–1472.

3.4 Documentation

3.4.1 Specifications

Documentation shall be in accordance with the Data Requirements List of the EOS–AM Spacecraft Statement of Work (SOW), contract NAS5–32500. All parent and component specifications associated with this specification are shown in the EOS–AM Spacecraft Specification Tree, 20008536.

3.4.2 Drawings

All physical parameters shall be defined and controlled by the DAS Panel Assembly Drawing (20008571) and the DAS Panel Harness drawing.

3.4.3 Test Plans and Procedures

Detailed qualification and acceptance test plans shall be prepared.

3.5 Precedence

In the event of conflicting requirements between the documents referenced herein and the content of this document, the following descending order of precedence shall be used to resolve the conflict:

a. Requirements Document for the EOS–AM Spacecraft (RD)

b. Performance Assurance Requirements for the EOS Observatories (PAR)

c. Unique Instrument Interface Documents (UIIDs)

d. The General Instrument Interface Specification (GIIS)

e. Contract End Item (CEI)

f. External Interface Control Documents (ICDs) (e.g., EOS to Launch Vehicle, EOS to TDRSS, etc.)

g. Subsystem and Major Assembly Specifications

h. Component Specifications.

(This page intentionally left blank.)

4 QUALITY ASSURANCE PROVISIONS

This Section outlines the requirements and structure of a quality assurance program for the DAS Panel. The purpose of the quality assurance program is to demonstrate that the design of the DAS Panel and its components meets the performance requirements, has been manufactured properly, and will operate as designed in association with all other EOS–AM Spacecraft interfaces. The PAIP, PN20005397, documents the overall quality assurance approach for the EOS–AM Spacecraft. The specifics of the performance verification process are documented in the Verification Plan, PN20005404.

4.1 General

This Section delineates the inspections and tests which shall be performed in order to verify the equipment module conformance to the requirements of Section 3 of this specification. Test methods and measurements shall be compliant with all requirements specified herein.

4.1.1 Responsibility for Tests

Unless otherwise specified herein, or in the Statement of Work, acceptance and qualification testing shall be performed by Astro Space.

4.1.2 Special Tests and Examinations

Not applicable

4.1.3 Reliability Test

Not applicable

4.1.4 Engineering Evaluation and Test

Not applicable

4.1.5 Protoflight Test

Protoflight tests, combined with the other verification methods of Attachment A, shall verify that the flight hardware design meets the technical requirements of Section 3 of the DAS Panel specification to assure operational suitability in the defined environments. Protoflight test hardware shall be used for qualification testing and shall be identical in configuration and production processing to flight hardware.

Protoflight tests, where specified, shall consist of protoflight level exposure of the first flight article for acceptance level durations (time and/or cycles).

Protoflight tests shall be performed under strict control of environments and test procedures. Adjustments or tuning of protoflight test hardware is not permitted throughout the entire test program. The requirements of Section 3 to be verified prior to, or after each environment, shall be as specified in the DAS Panel Test Plan, PN20008571.

4.1.6 Installation Test and Checkout

Installation testing and checkout shall include continuity checking, interface mating, support equipment compatibility, and documentation verification. The DAS Panel integration and test flow is shown in Figure 7.

4.1.6.1 Electrical Integration and Test (EIC)

An EIC shall be performed to verify the proper input and grounding of power, commands, and signals prior to mating of flight hardware. The EIC shall also verify proper response to power, commands, and signal upon initial integration of flight hardware. The DAS Panel components shall be integrated with the panel in the following order:

1. DAS Panel Harness
2. Fuse and Distribution Board
3. Bus Data Unit
4. HCE's
5. ESA Interfaces

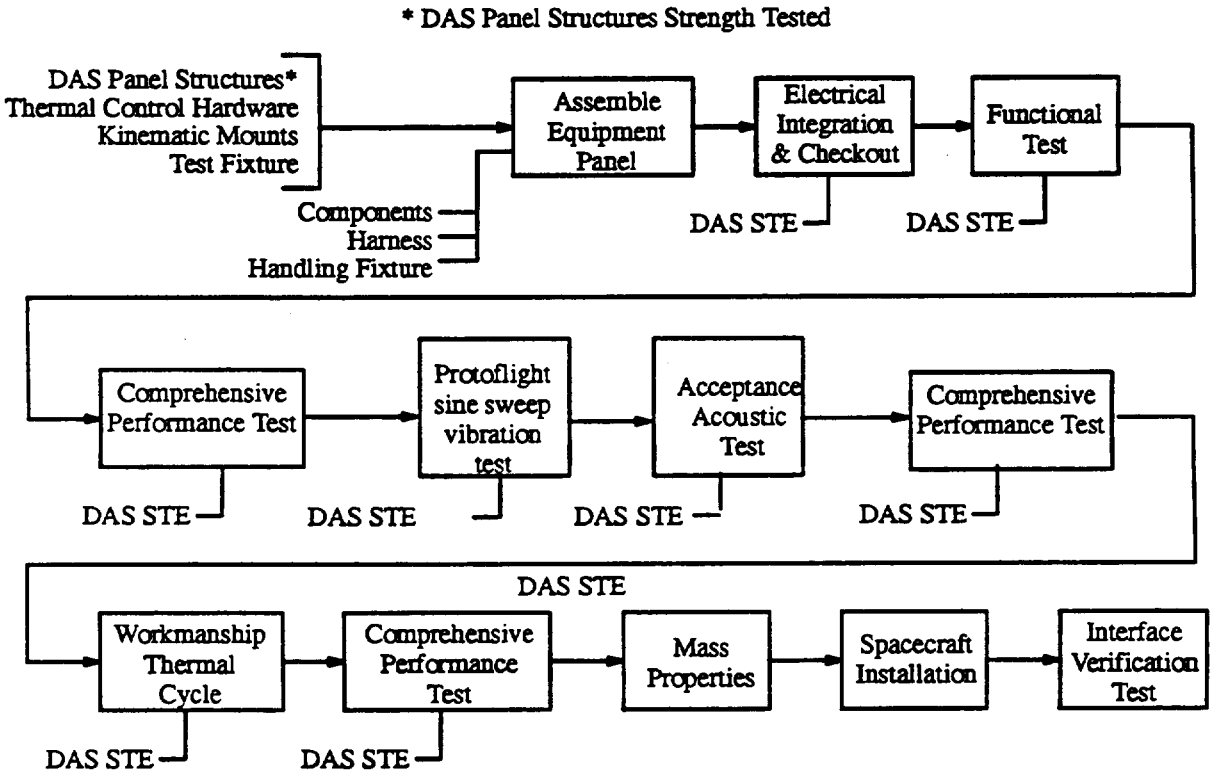

Figure 7. DAS Panel Integration and Test Flow

6. Upconverter '1'
7. Upconverter '2'
8. Solid State Power Amplifier '1'
9. Solid State Power Amplifier '2'
10. Waveguide Switch
11. Transmit Filter

Test outputs on the modulator and upconverter component boxes shall be used to verify output signal presence for these components.

4.1.6.2 Functional Test (FT)

A functional test of the DAS Panel shall be performed to test command and data paths between components and to exercise prime and redundant hardware. Test outputs on the modulator and upconverter component boxes shall be used to verify proper functional operation of these components.

4.1.6.3 Comprehensive Performance Test (CPT)

A CPT shall be performed to verify that the DAS Panel meets the performance requirements in all operational and contingency modes, as well as verifying all command and data paths and all redundant hardware.

4.1.6.4 Interface Verification Test (IVT)

An IVT shall be performed to verify the proper Equipment Module interfaces to the Spacecraft Bus. It will verify all power, ground, and signal connectors are properly mated and that there is signal presence on the proper connectors.

4.1.7 Formal Test Verification

Formal verification of the performance requirements of the DAS Panel are in the Verification Matrix, Attachment A. The Verification Matrix identifies the test method as specified herein and the level at which tests are conducted. The DAS Panel shall be tested according to the DAS Panel Test Plan, PN20008571.

4.2 Quality Conformance Inspections

4.2.1 Method of Verification

4.2.1.1 Inspection

Inspection may be used to verify design and construction requirements, drawing compliance, or specific physical dimensions of the equipment module. Inspection is a method of verification of physical characteristics that determines compliance without the use special laboratory equipment,

procedures, test support items, or services. Inspection uses standard methods such as visual gauges, etc., to verify compliance with requirements. Inspection also includes the review of design documents, material lists, code, plans, etc., to verify that requirements have been met.

4.2.1.2 Analysis

Analytical techniques may be used, in lieu of testing, to verify compliance to specified requirements, either alone or in combination with test. The selected techniques may include, typically, system engineering analysis, statistics, qualitative analysis, analog modeling, and computer simulation.

4.2.1.3 Demonstration

Demonstration is a qualitative method of verification that evaluates the properties of the subject equipment by observation. Demonstration is used with or without special test equipment or instrumentation to verify required characteristics such as operational functioning human engineering features, service and access features, transportability, and displayed data.

4.2.1.4 Test

Test is a quantitative method of verification wherein performance requirements are verified by measurement during and after the controlled application of functional and environmental stimuli. These measurements may require the use of laboratory equipment, recorded data, procedures, test support items, or services.

4.2.1.5 Classification of Characteristics

Classification of characteristics as critical, major or minor, shall be as defined in MIL-STD-109.

4.2.1.6 Test Equipment

[1] Existing test equipment shall be used wherever practical.

[2] Where new test equipment is required to test units which are physically or functionally identical or similar, the equipment shall be designed to perform its task(s) on each element of that group, where practical.

4.2.1.6.1 Test Equipment Safety Features

[1] Test equipment shall incorporate any safety interlocks or other safety features necessary to reduce the introduction of safety hazards by the test equipment.

[2] Any safety feature included in any Spacecraft test equipment shall give a visual, auditory, or electronic indication of activation when it is activated.

4.2.1.6.2 Test Equipment Verification

Unless otherwise specified herein, test equipment used to measure *(subsystem)* performance characteristics shall be capable of demonstrating that:

a. it will not impose environments on the tested item(s) beyond the levels called for in the Verification Specification, PS20005404, and

b. it is capable of imposing the test levels called for in the Verification Specification, PS20005404.

c. it is capable of meeting all the requirements imposed on it by the Ground Support Equipment Requirements Document, 20001430 (GSERD)

4.2.1.6.3 Test Equipment Calibration

[1] EM Test equipment shall be calibrated in accordance with the Performance Assurance Implementation Plan, 20005397.

(This page intentionally left blank.)

5 PREPARATION FOR DELIVERY

5.1 General

Interior and exterior shipping containers shall be marked in accordance with the Identification and Marking Section of the GIS (2008501).

(This page intentionally left blank.)

6 NOTES

6.1 Definitions

None

6.2 Abbreviations and Acronyms

AM	Amplitude Modulation
BDU	Bus Data Unit
BPSK	Binary Phase Shift Keying
C&DH	Command and Data Handling
CDR	Critical Design Review
CEI	Contract End Item
Cmd	Command
CPT	Comprehensive Performance Test
dB	Decibels
dBm	Decibels relative to 1 mW
DAS	Direct Access System
DB	Direct Broadcast
DDL	Direct Downlink
DP	Direct Playback
DSN	Deep Space Network
EAS	Electrical Accommodations Subsystem
ECL	Emitter Coupled Logic
EIC	Electrical Integration and Test
EIRP	Effective Isotropic Radiated Power
EMC	Electromagnetic Compatibility
EOL	End–of–Life
EOS	Earth Observing System
EOS–AM	EOS–AM mission
EPS	Electrical Power Subsystem
ESD	Electrostatic Discharge
FDB	Fuse & Distribution Board

FT	Functional Test
GIS	General Interface Specification
GSE	Ground Support Equipment
GSFC	Goddard Space Flight Center
HCE	Heater Control Electronics
HDBK	Handbook
HGA	High Gain Antenna
Hz	Hertz (cycles per second)
i.e.	that is (id est)
I	In–phase (portion of QPSK signal)
ICD	Interface Control Document
IF	Intermediate Frequency
IVT	Interface Verification Test
I&T	Integration and Test
KM	Kinematic Mounts
lb	Pounds (mass)
Mbps	Megabits Per Second
MHz	Megahertz
MIL	Military
MO	Master Oscillator
NA	Not Applicable
NASA	National Aeronautics and Space Administration
NRZ–L	Non–Return to Zero Level
NRZ–M	Non–Return to Zero Mark
P_S	Probability of Success
PA	Power Amplifier
PAIP	Performance Assurance Implementation Plan
PAML	Program Approved Materials and Processes List
PAPL	Program Approved Parts List
PAR	Performance Assurance Requirements
PBSG	Pseudorandom Bit Stream Generator
PDR	Preliminary Design Review

PFD	Power Flux Density
PM	Phase Modulation
PMAD	Power Management and Distribution
Q	Quadrature (portion of QPSK signal)
QPSK	Quadrature Phase Shift–Keying
RF	Radio Frequency
RD	Requirements Document
SIT	Set In Test
SMA	Sub Miniature Adapter
SMS	Structures and Mechanisms Subsystem
SOW	Statement of Work
SQPSK	Staggered QPSK
STD	Standard
SU–QPSK	Staggered Unbalanced–QPSK
S/C	Spacecraft
S/S	Subsystem
TBD	To Be Determined
TBR	To Be Reviewed
TCS	Thermal Control Subsystem
TDRSS	Tracking and Data Relay Satellite System
Tlm	Telemetry
U/C	Upconverter
VSWR	Voltage Standing Wave Ratio
W	Watt (power)
WG	Waveguide
WSMCR	Western Space and Missile Center Regulations
Xmit	Transmit

6.3 Exceptions to the GIS and GIIS

None.

6.4 Requirements Traceability Matrix

Requirements shown in Section 3 and 4 of this specification were derived from the source documents shown in the Requirements Traceability Matrix, Attachment B (provided under separate cover).

(This page intentionally left blank.)

APPENDIX I

10 ELECTRICAL CONNECTOR CONTACT ASSIGNMENTS

The EM connectors on the electrical connector bracket shall be configured as shown in Figure 8.

Circuit categories are (TBD–7).

PIN assignments are (TBD–8).

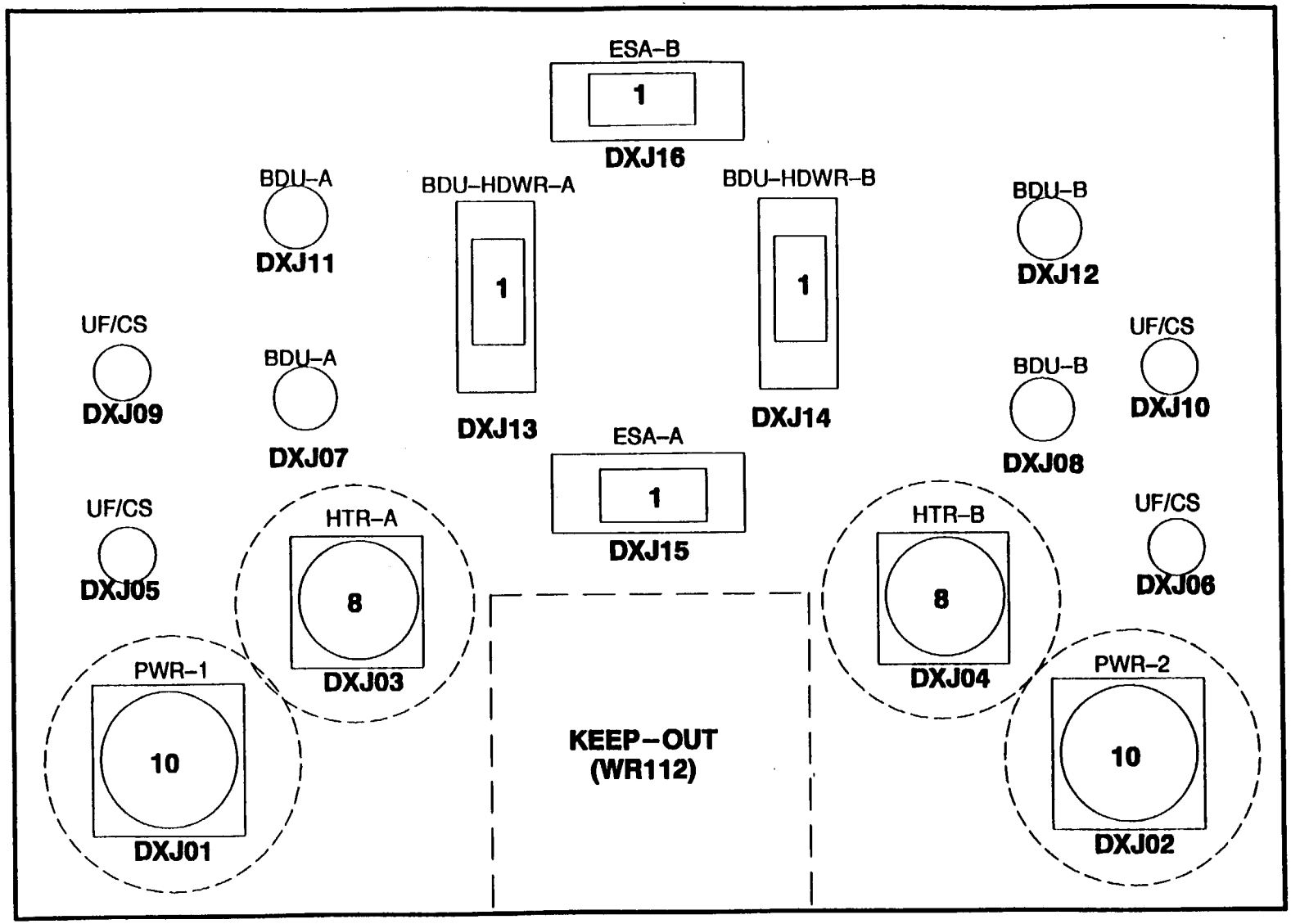

Figure 8. DAS Panel Interface Bracket

Connector Designation: DXJ01 Part Number: 20034844PJ1B98N		Connector Function: Power input Connector Type: 6 pin, circular	
Contact Number	**Function Name**	**Circuit Category**	**Destination/Source**
1	DFDBA 120v POS–1		DXJO1/Pwr Bus
2	DFDBA 120V RTN–1		Pwr Bus/DXJ01
3	DFDBA 120V POS–2		DXJO1/Pwr Bus
4	DFDBA 120V RTN–2		Pwr Bus/DXJ01
5	DEM FAULT GND A		GND/DXJ01

Connector Designation: DXJ02 Part Number: 20034844PJ1B98A		Connector Function: Power input Connector Type: 6 pin, circular	
Contact Number	**Function Name**	**Circuit Category**	**Destination/Source**
1	DFDBB 120v POS–1		DXJO2 /Pwr bus
2	DFDBB 120V RTN–1		Pwr bus/DXJ02
3	DFDBB 120V POS–2		DXJO2/Pwr bus
4	DFDBB 120V RTN–2		PWR bus /DXJ02
5	DEM FAULT GND B		GND/DXJ02

Connector Designation: PXJ03 Part Number: 20038047PJ1A35N		Connector Function: Heater Pos Connector Type: 6 pin, circular	
Contact Number	**Function Name**	**Circuit Category**	**Destination/Source**
1			
2	ESA1 HTR A POS		PXJ03/ESA1 HTR A
3	ESA1 HTR A POS RTN		ESA1 HTR A/PXJ03
2	ESA2 HTR A POS		PXJ03/ESA2 HTR A
3	ESA2 HTR A POS RTN		ESA2 HTR A/PXJ03

Connector Designation: PXJ15 Part Number: 20042415P10095A		Connector Function: ESA Temp Tlm Connector Type: 9 socket rectangular	
Contact Number	**Function Name**	**Circuit Category**	**Destination/Source**
1			
2	ESA1 Temp A TLM		PXJ15/ESA1 HTR A

Connector Designation: PXJ15 Part Number: 20042415P10095A		Connector Function: ESA Temp Tlm Connector Type: 9 socket rectangular	
Contact Number	**Function Name**	**Circuit Category**	**Destination/Source**
3	ESA1 Temp A TLM RTN		ESA1 HTR A/PXJ15
4	ESA1 CNTRL THMS A POS		PXJ15/ESA1 HTR A
5	ESA1 CNTRL THMS A RTN		ESA1 HTR A/PXJ15
6	ESA2 CNTRL THMS A POS		PXJ15/ESA2 HTR A
7	ESA2 CNTRL THMS A RTN		ESA2 HTR A/PXJ15

Connector Designation: PXJ16 Part Number: 20042415P10095A		Connector Function: Heater Pos Connector Type: 9 socket rectangular	
Contact Number	**Function Name**	**Circuit Category**	**Destination/Source**
1			
2	ESA1 CNTRL THMS B POS		PXJ16/ESA1 HTR B
3	ESA1 CNTRL THMS B RTN		ESA1 HTR B/PXJ16
4	ESA1 Temp B TLM		PXJ16/ESA1 HTR B
5	ESA1 Temp B TLM RTN		ESA1 HTR B/PXJ16
6	ESA2 Temp A TLM		PXJ16/ESA2 HTR A
7	ESA2 Temp A TLM RTN		ESA2 HTR A/PXJ16

Connector Designation: PXJ04 Part Number: 20038047PJ1A35A		Connector Function: Heater Pos Connector Type: 6 pin, circular	
Contact Number	**Function Name**	**Circuit Category**	**Destination/Source**
1			
4	ESA1 HTR B POS		PXJ04/EAS1 HTR B
5	ESA1 HTR B POS RTN		ESA1 HTR B/PXJ04
4	ESA2 HTR B POS		PXJ04/ESA1 HTR B
5	ESA2 HTR B POS RTN		ESA2 HTR B/PXJ04

Connector Designation: DXJ13 Part Number: 20042415P1009PA		Connector Function: Cmd interface Connector Type: Rectangular (9 pin)	
Contact Number	**Function Name**	**Circuit Category**	**Destination/Source**
1.	CTIU1 DBDU A ON CMD		DXJ13/CTIU1
2.	CTIU1 DBDU A ON CMD RTN		CTIU1/DXJ13
3.	CTIU1 DBDU A OFF CMD		DXJ13/CTIU1
4.	CTIU1 DBDU A OFF CMD RTN		CTIU1/DXJ13
5.	CTIU2 DBDU A ON CMD		DXJ13/CTIU2
6.	CTIU2 DBDU A ON CMD RTN		CTIU2/DXJ13
7.	CTIU2 DBDU A OFF CMD		DXJ13/CTIU2
8.	CTIU2 DBDU A OFF CMD RTN		CTIU2/DXJ13

Conector Designation: DXJ14 Part Number: 20042415P1009PA		Connector Function: Cmd interface Connector Type: Rectangular (9 pin)	
Contact Number	**Function Name**	**Circuit Category**	**Destination/Source**
1.	CTIU1 DBDU B ON CMD		DXJ14/CTIU1
2.	CTIU1 DBDU B ON CMD RTN		CTIU1/DXJ14
3.	CTIU1 DBDU B OFF CMD		DXJ14/CTIU1
4.	CTIU1 DBDU B OFF CMD RTN		CTIU1/DXJ14
1.	CTIU2 DBDU B ON CMD		DXJ14/CTIU2
2.	CTIU2 DBDU B ON CMD RTN		CTIU2/DXJ14
3.	CTIU2 DBDU B OFF CMD		DXJ14/CTIU2
4.	CTIU2 DBDU B OFF CMD RTN		CTIU2/DXJ14

Connector Designation: DXJ07 Part Number: 20040889P1		Connector Function: C & T BUS Interface Connector Type: TRIAX 1553	
Contact Number	**Function Name**	**Circuit Category**	**Destination/Source**
	DC&T BUS A STUB 1		DXJ07/C&T BUS A

Connector Designation: DXJ11 Part Number: 20040889P1		Connector Function: C & T BUS Interface Connector Type: TRIAX 1553	
Contact Number	Function Name	Circuit Category	Destination/Source
	DC&T BUS A STUB 2		DXJ11/C&T BUS A

Connector Designation: DXJ08 Part Number: 20040889P1		Connector Function: C & T BUS Interface Connector Type: TRIAX 1553	
Contact Number	Function Name	Circuit Category	Destination/Source
	DC&T BUS B STUB 1		DXJ08/C&T BUS B

Connector Designation: DXJ12 Part Number: 20040889P1		Connector Function: C & T BUS Interface Connector Type: TRIAX 1553	
Contact Number	Function Name	Circuit Category	Destination/Source
	DC&T BUS B STUB 2		DXJ12/C&T BUS B

Connector Designation: DXJ05 Part Number: G2R52		Connector Function: C & T BUS Interface Connector Type: SMA Jack	
Contact Number	Function Name	Circuit Category	Destination/Source
	DAS1 IF SIG		DXJ05/DAS Modulator1

Connector Designation: DXJ09 Part Number:		Connector Function: C & T BUS Interface Connector Type: SMA Jack	
Contact Number	Function Name	Circuit Category	Destination/Source
	DAS1 LO SIG		DXJ09/DAS Modulator1

Connector Designation: DXJ06 Part Number:		Connector Function: C & T BUS Interface Connector Type: SMA Jack	
Contact Number	Function Name	Circuit Category	Destination/Source
	DAS2 IF SIG		DXJ06/DAS Modulator2

Connector Designation: DXJ10 Part Number:		Connector Function: C & T BUS Interface Connector Type: SMA Jack	
Contact Number	**Function Name**	**Circuit Category**	**Destination/Source**
	DAS2 LO SIG		DXJ10/DAS Modulator2

MARTIN MARIETTA
ASTROSPACE

EOS-DN-EAS-007

DESIGN NOTE

TITLE: EOS - Equipment Module and Instrument

Top Level Signal Flow Diagrams

AUTHOR: B. Giunta

AUTHOR'S MANAGER: S. Holaday DATE 7/23/93

SE & I MANAGER: S. Carey DATE 7/23/93

CHIEF ENGINEER: D. Longcoy DATE 7/23/93

REVISIONS

LETTER	DESCRIPTION	DATE	AUTHOR
A	Update to conform to S/C design changes	7/123/93	

EOS Form 006-4/91

MARTIN MARIETTA
ASTROSPACE

DESIGN NOTE SUMMARY

DN#: EOS-EAS-007 **Revision:** A **Date:** 23 July 1993

Title: EOS - Equipment Module and Instrument Top Level Signal Flow Diagrams

Author: Bill Giunta **Source ID (ESTA, PD, Memo, etc.):** N/A

Purpose/Questions Answered:

The attached diagrams show the top level electrical flow within each **Equipment Module** and **Instrument.** While the focus of each drawing is on the EM, the external interfaces are also included. Where possible power feeds are included to provide a more comprehensive schematic. More detailed information on power and signal returns, and grounding will be provided in the **EOS-AM Spacecraft Grounding Diagram,** Drawing #20038087. These diagrams will be used to develop the **EOS-AM Spacecraft Functional Interconnection Diagram,** Drawing #20038086.

The flow diagrams accurately represent the S/C design as of this DN release date.

Information transferred during the development of these diagrams assisted in component, subsystem and S/C interface definition and, assisted with the design process.

Summary/Answers:

Recommendations: (Be Specific)	Accepted	Rejected	Baselined	Date
Revise these drawings to reflect future design changes.				

Open Items/Action Required	Responsible Person	Due Date

Comments

Form Completed By Giunta **Date** 7/23/93 **Page** ___ **of** ___

EOS Form 007-2/91

POWER EM - TOP LEVEL FLOW

NOTE: "P" is the designated prefix for POWER equipment. See memo EOS-HAR-022.

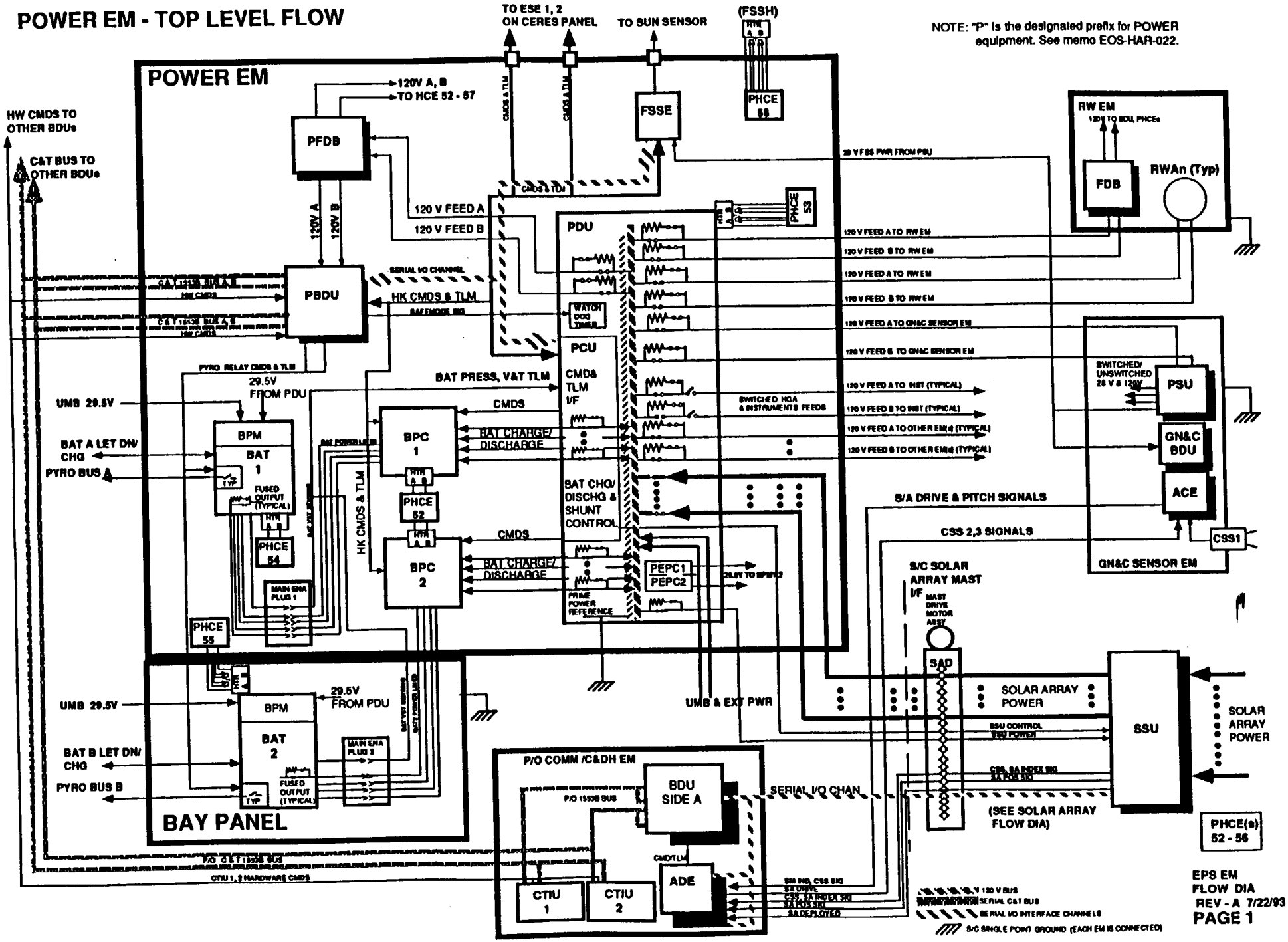

EPS EM
FLOW DIA
REV - A 7/22/93
PAGE 1

COMM EM TOP LEVEL FLOW

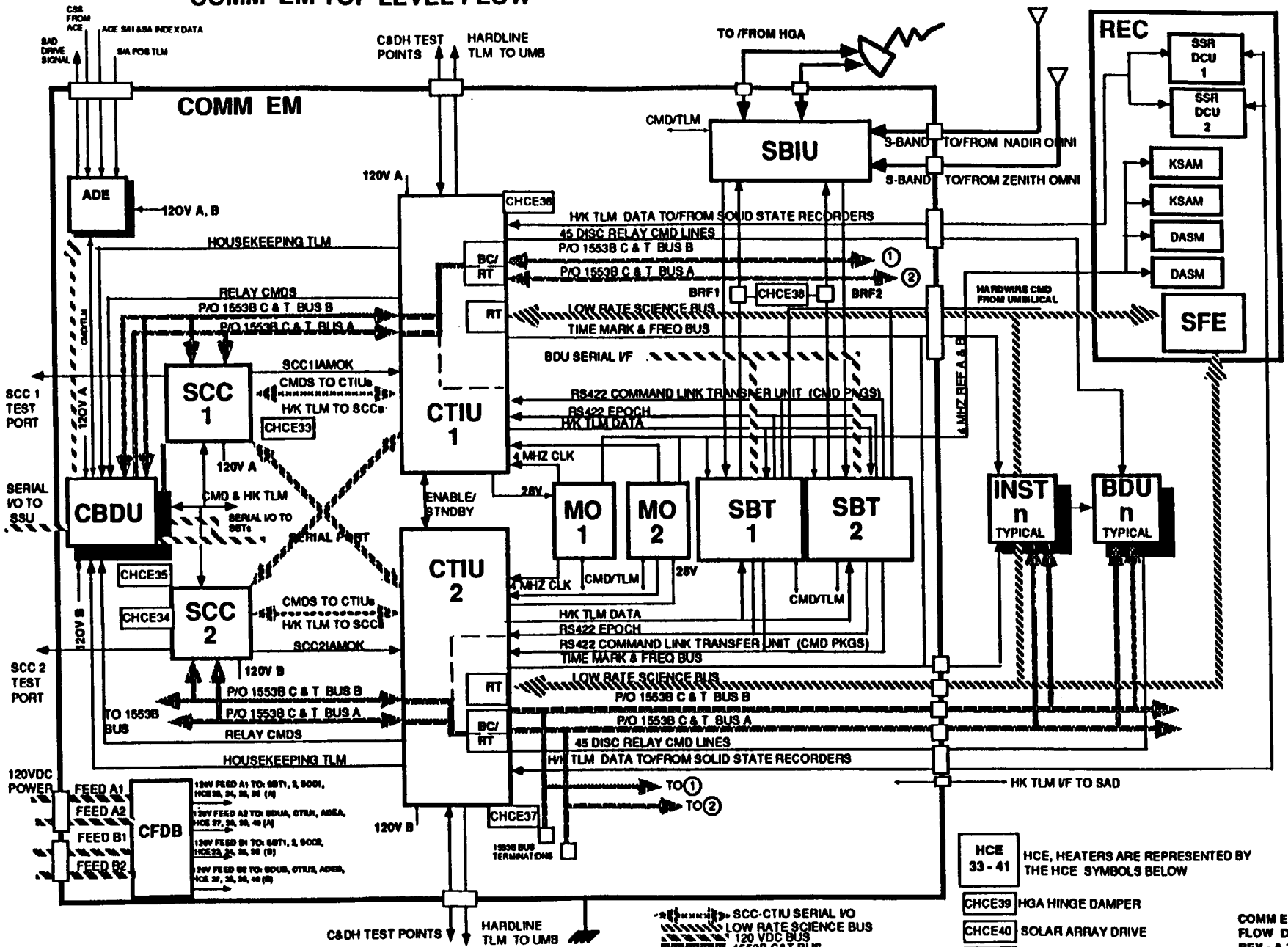

NOTE: "C" is the designated prefix for COMM equipment. See memo EOS-HAR-022.

GN&C SENSOR EM - TOP LEVEL FLOW

NOTE: "G" is the prefix for GN&C Module BUS equipment. See memo EOS-HAR-022.

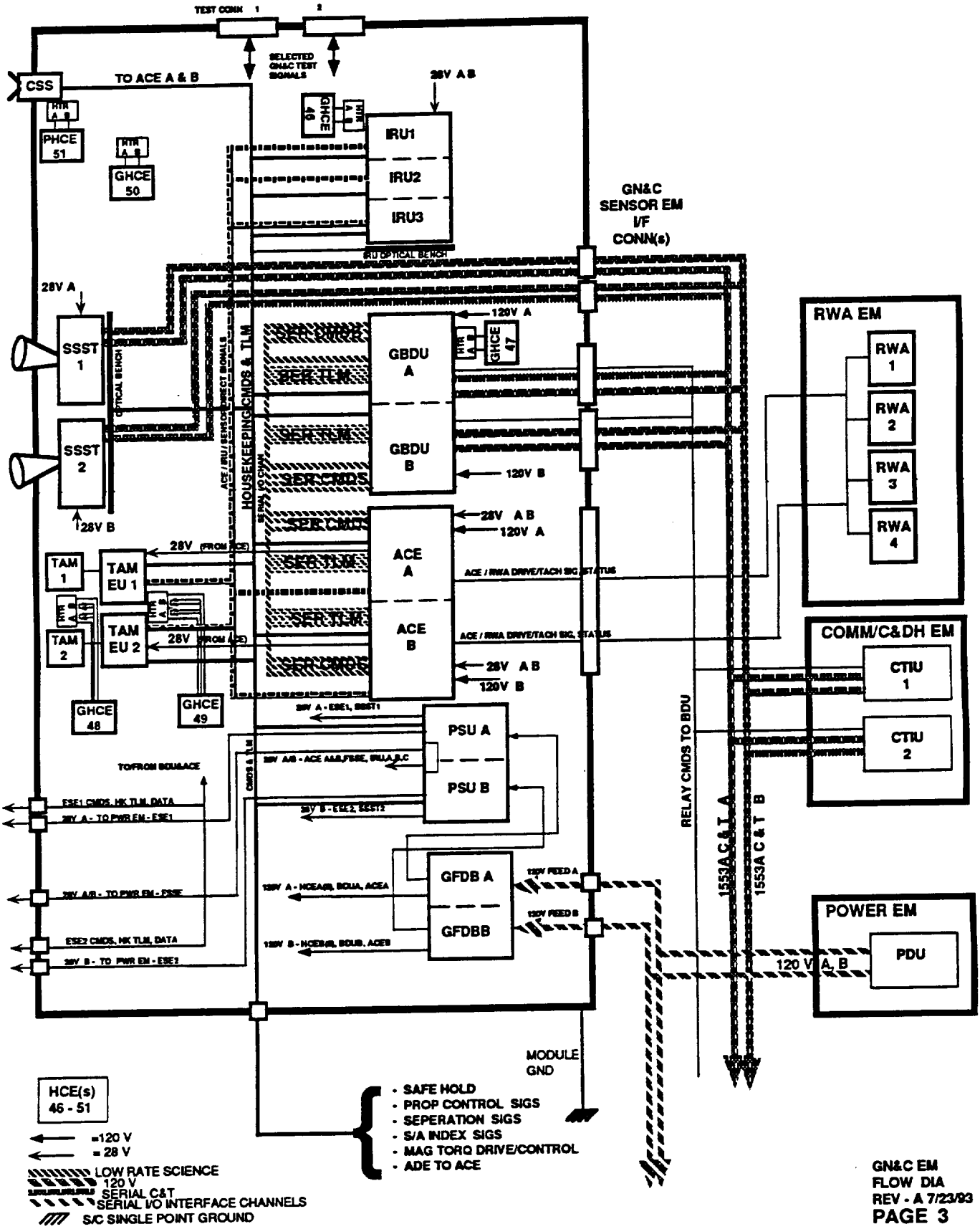

GN&C EM
FLOW DIA
REV - A 7/23/93

RWA EM - TOP LEVEL FLOW

NOTE: "W" is the designated prefix for RWA EM equipment. See memo EOS-HAR-022.

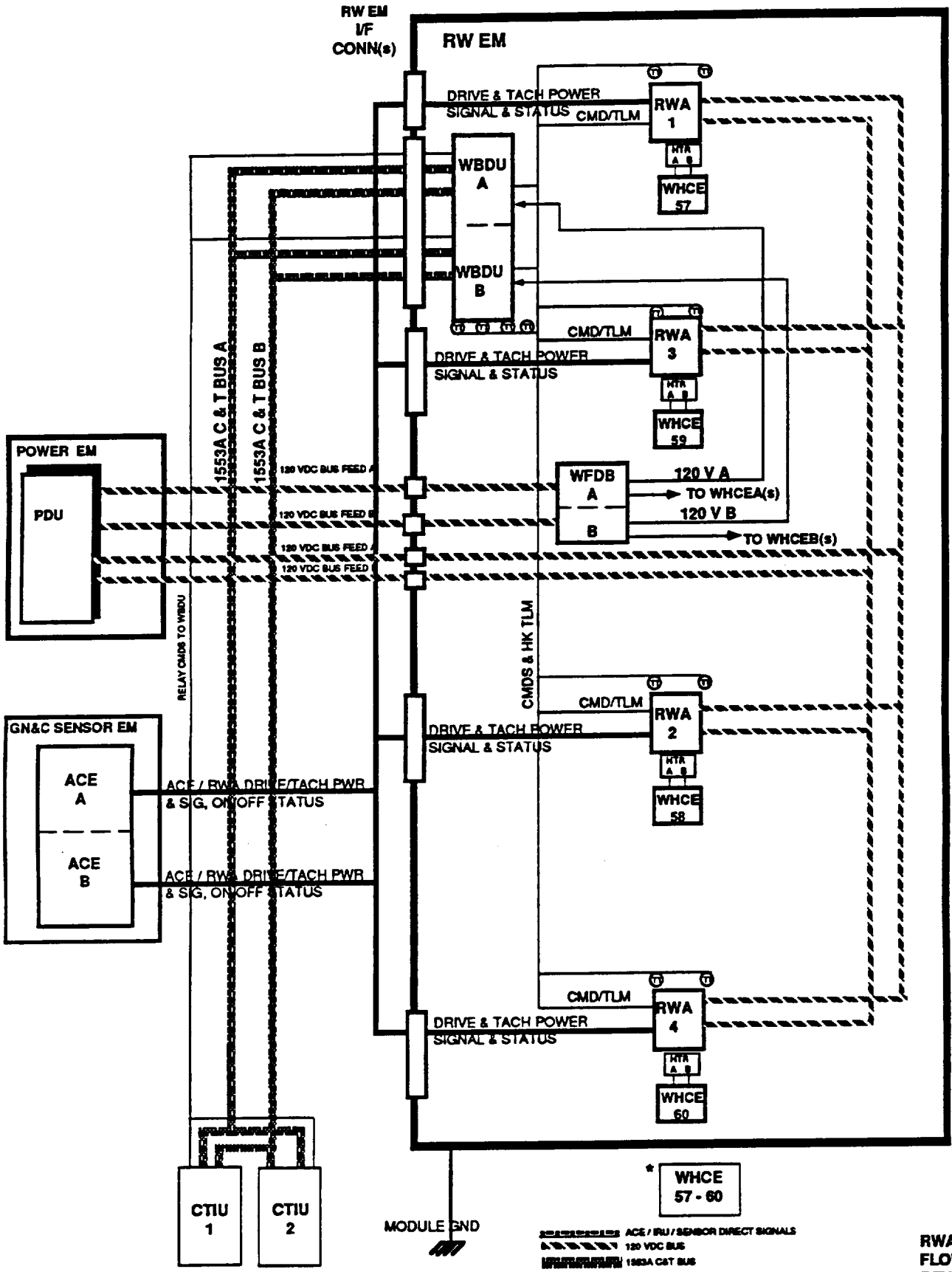

RWA EM
FLOW DIA
REV A 7/21/93
PAGE 4

RECORDER EM - TOP LEVEL FLOW

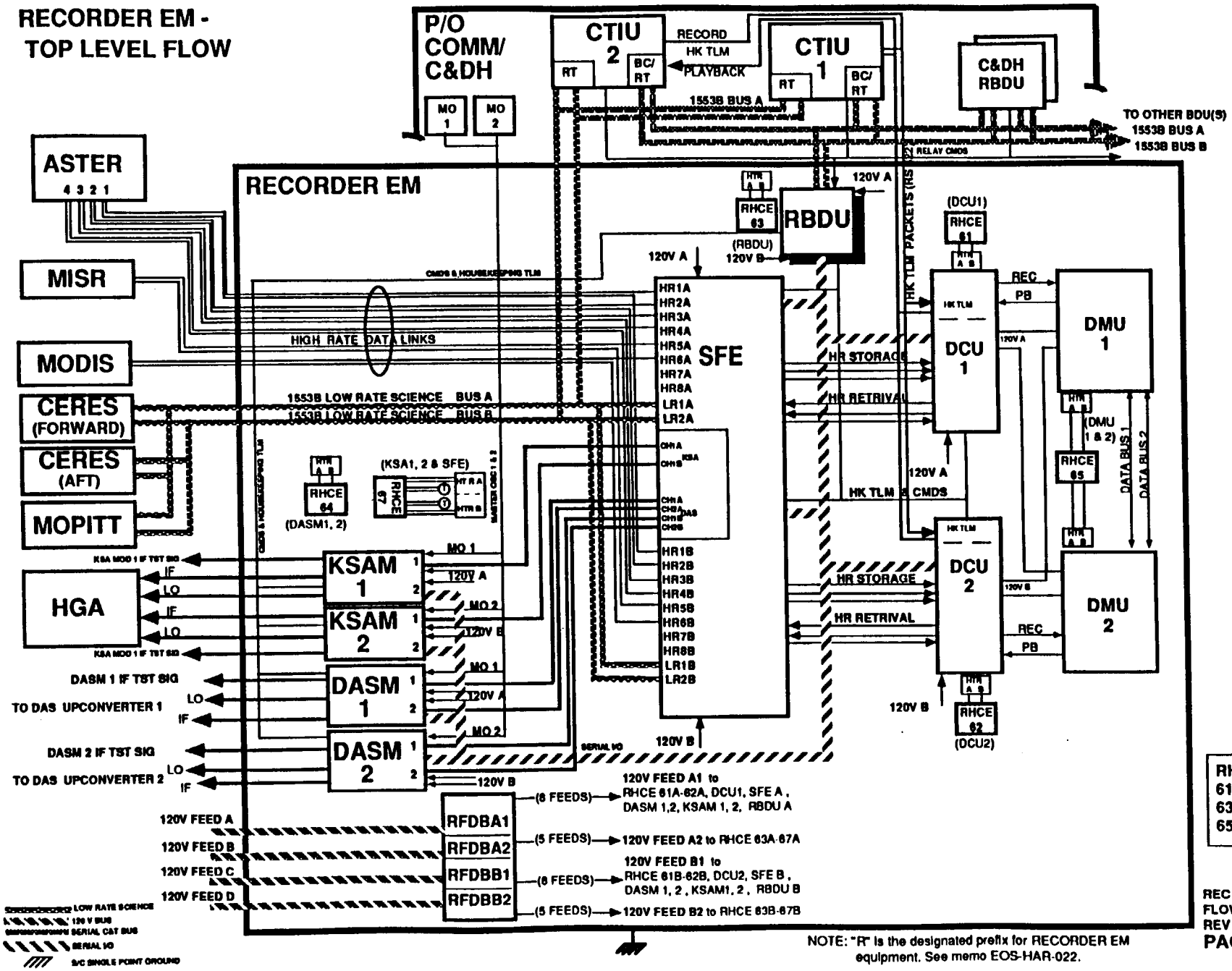

RHCE 61, 62 63, 64 65, 67

NOTE: "R" is the designated prefix for RECORDER EM equipment. See memo EOS-HAR-022.

REC EM FLOW DIA REV - A 7/23/93

DAS EM TOP LEVEL FLOW

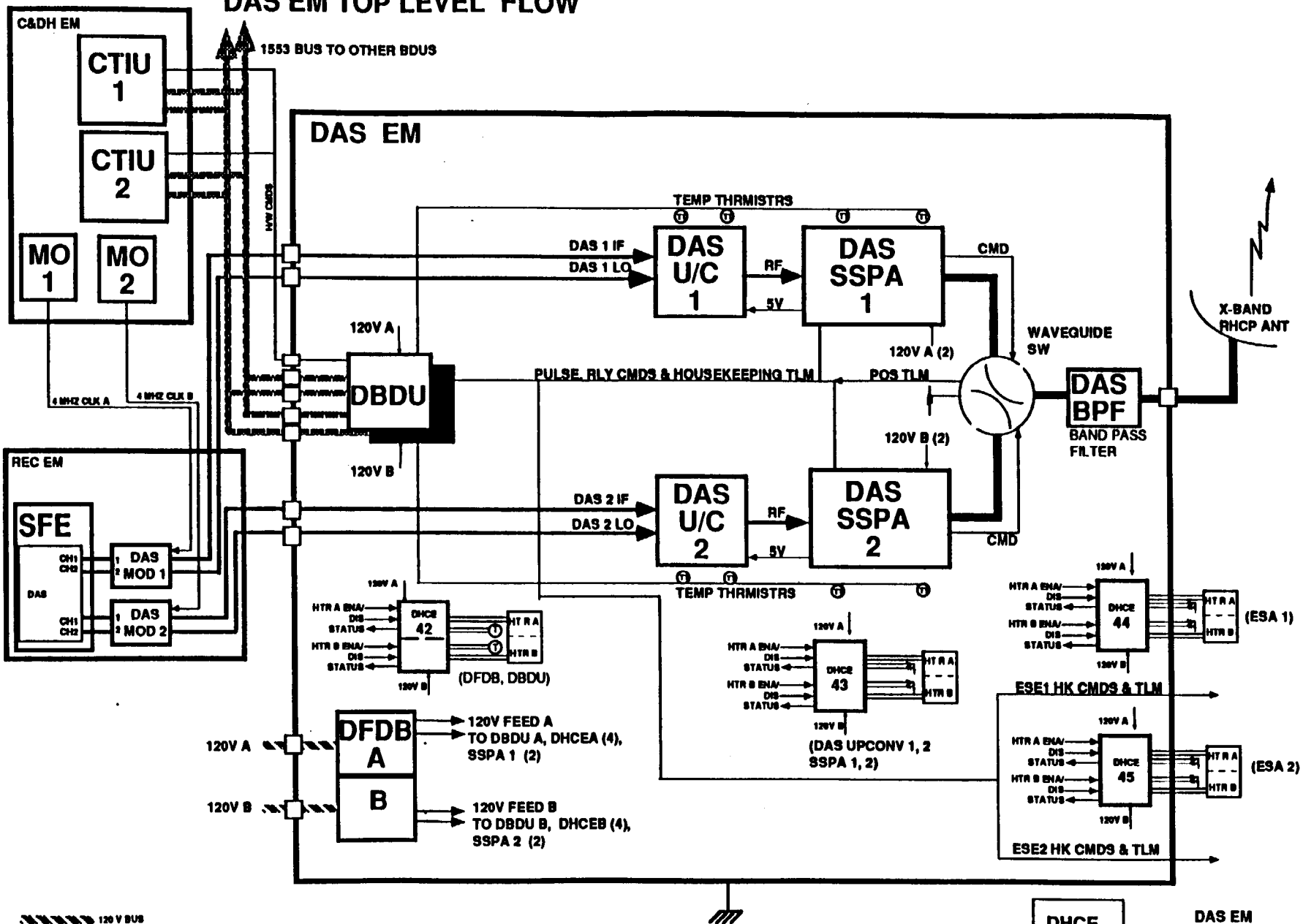

NOTE: "D" is the designated prefix for DAS EM equipment. See memo EOS-HAR-022.

DAS EM
FLOW DIA
REV - A 7/23/93
PAGE 6

PROPULSION MODULE TOP LEVEL FL

(ONLY SIDE A REA & SIGNAL LINES ARE SHOWN)

NOTES:

1) FOR DELTA VEL REA(s) CAT BED SW HT. A & B AND REA FIRE SIGNALS A & B ARE SPLICED TOGETHER IN THE DELTA VEL DIODE BOARDS

2) 4 ea TYPE 4 HCEs USED FOR THRUSTER VALVES
- UHCE28 =V 1, 2, 9, 10 (TYPE 4 = 4 CKT, RED, 28V CONTROLS)
- UHCE29 =V 3, 4, 11, 12
- UHCE30 =V 5, 6, 13, 14
- UHCE31 =V 7, 8, 15, 16

NOTE 2)
- PMEA CONTROL OF 36 HEATER CKTS

- 8 Propellant Lines	- 16 PMEA ckts, (7-22)
- 1 Propellant tank	- 2 PMEA ckts (1,2)
- 2 PMEA(s)	- 4 PMEA ckts, (23-26)
- 4 EPC(s)	- 8 PMEA ckts, (27-34)
- 1 BDU	- 2 PMEA ckts, (35,36)
- 2 LATCH VALVES	- 4 PMEA ckts, (3-6)

18 PRIME AND 18 RED = 36 TOTAL

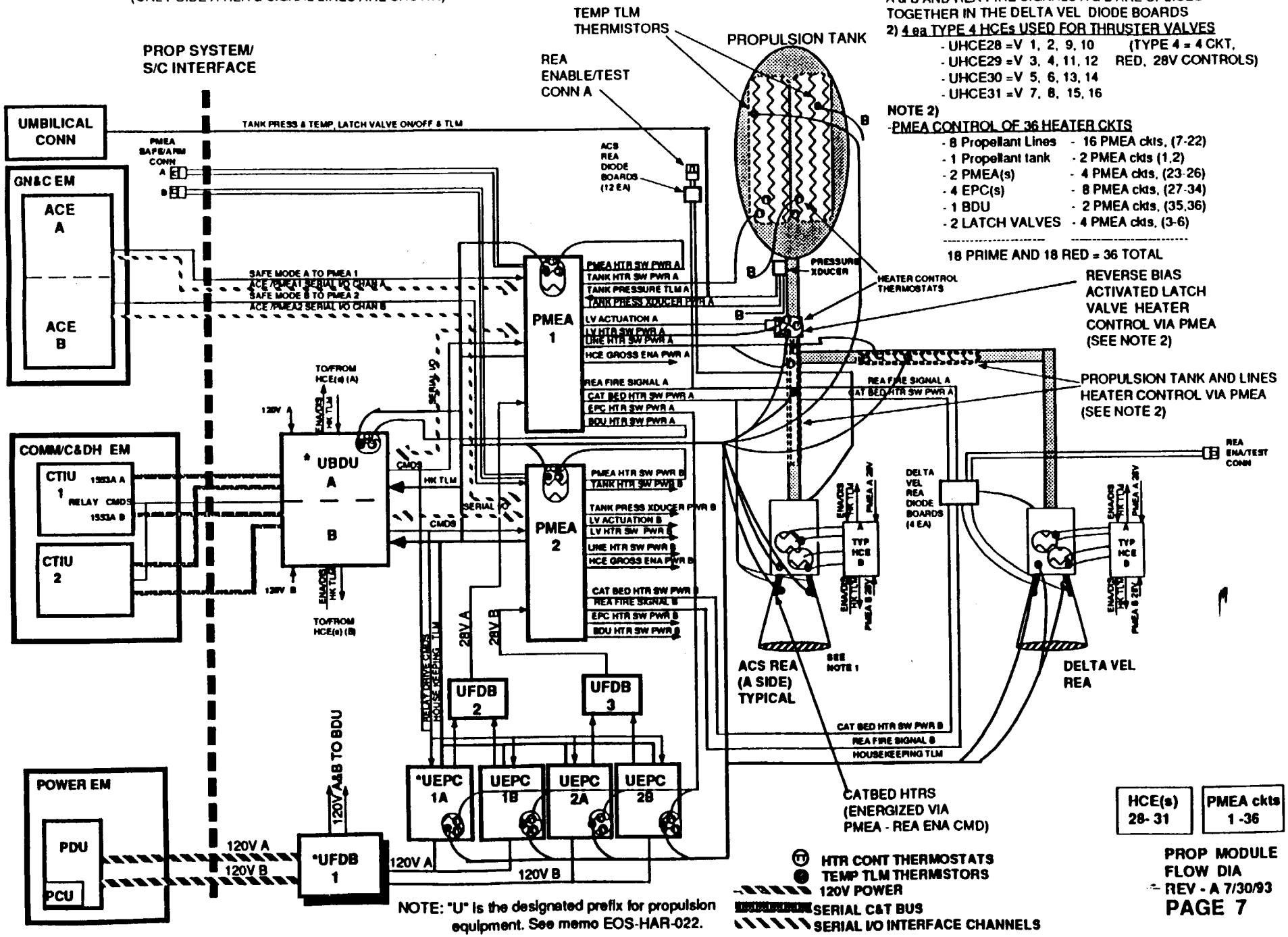

HCE(s)	PMEA ckts
28- 31	1 -36

NOTE: "U" is the designated prefix for propulsion equipment. See memo EOS-HAR-022.

PROP MODULE FLOW DIA
REV - A 7/30/93

HIGH GAIN ANTENNA - TOP LEVEL FLOW

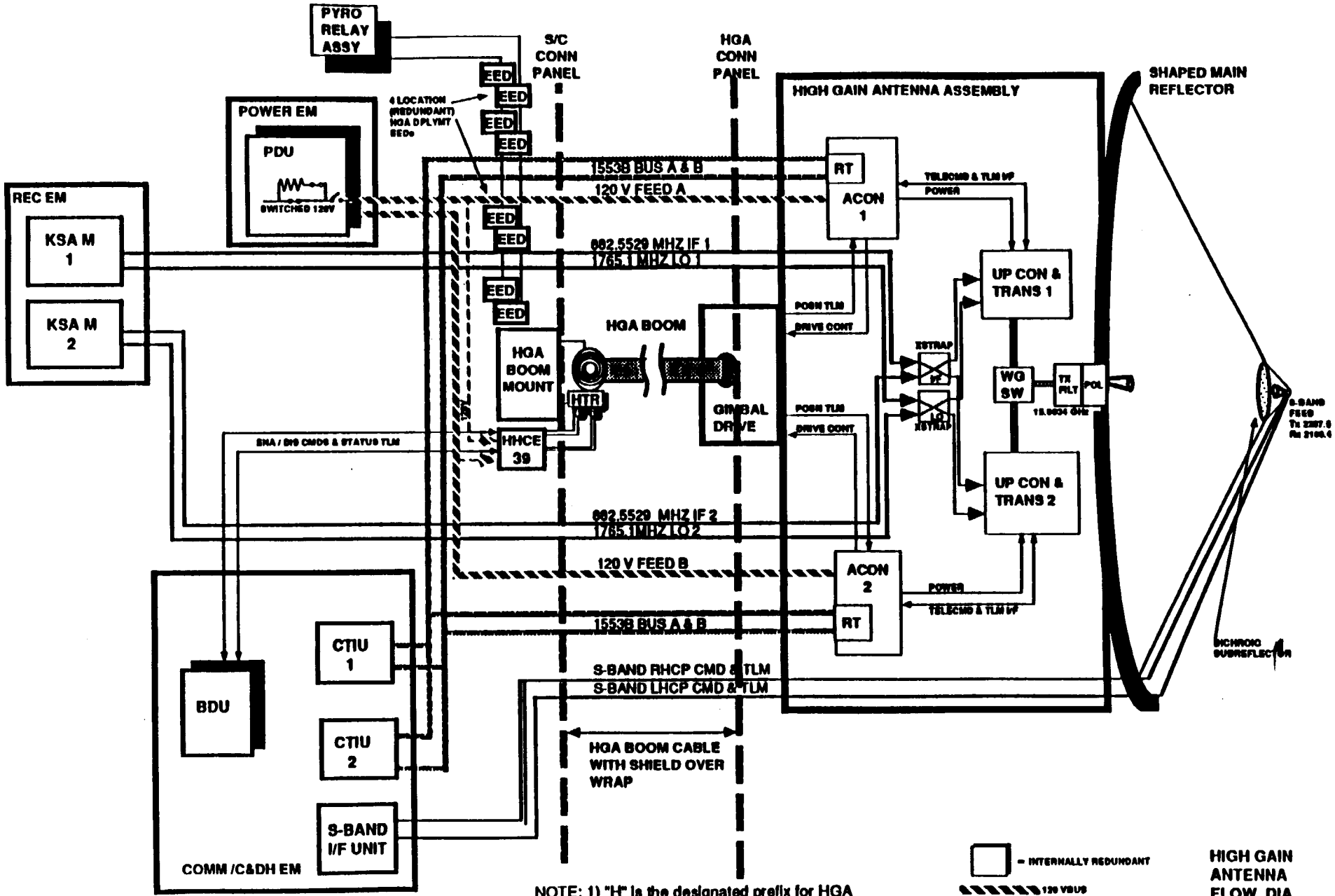

NOTE: 1) "H" is the designated prefix for HGA equipment. See memo EOS-HAR-022.
2) HCE39 serves the HGA boom hinge damper

HIGH GAIN ANTENNA FLOW DIA
REV - A 7/23/93
PAGE 8

SOLAR ARRAY MAST - TOP LEVEL FLOW

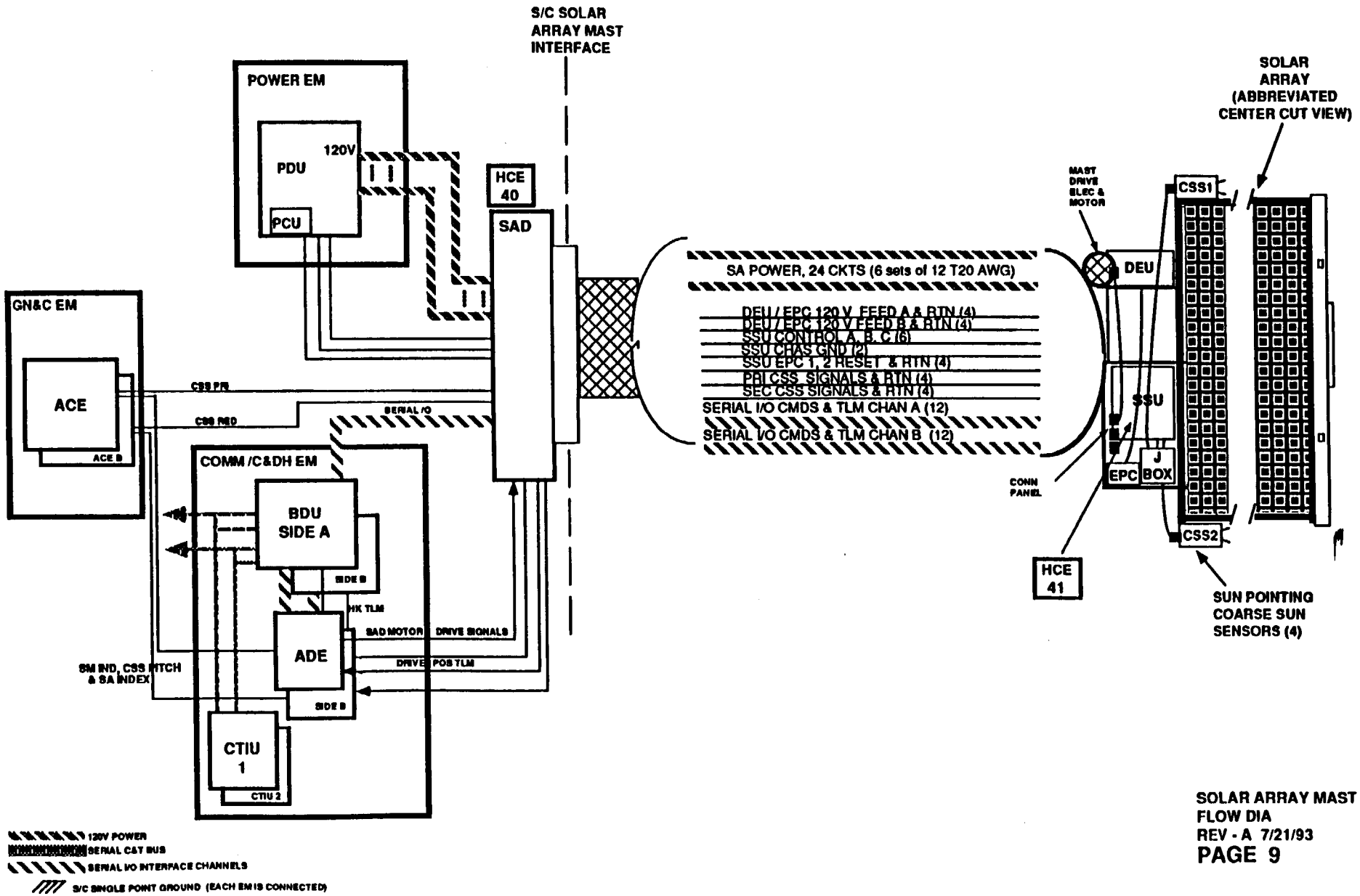

SOLAR ARRAY MAST
FLOW DIA
REV - A 7/21/93

ASTER TOP LEVEL FLOW

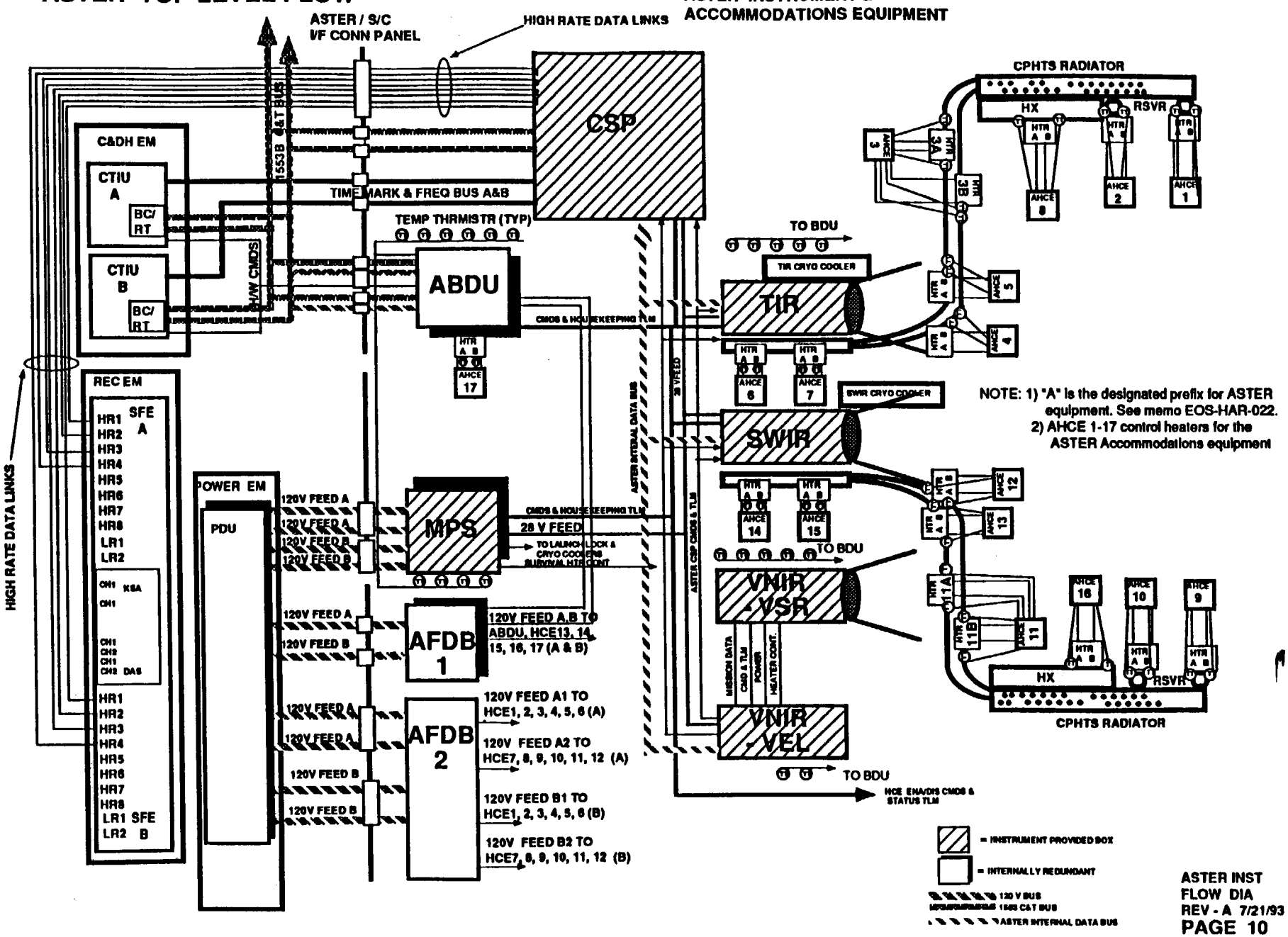

ASTER INST
FLOW DIA
REV - A 7/21/93

CERES TOP LEVEL FLOW

CERES has duplicate component configurations (CERES FORWARD and AFT)

CERES INSTRUMENT (ONE OF TWO)

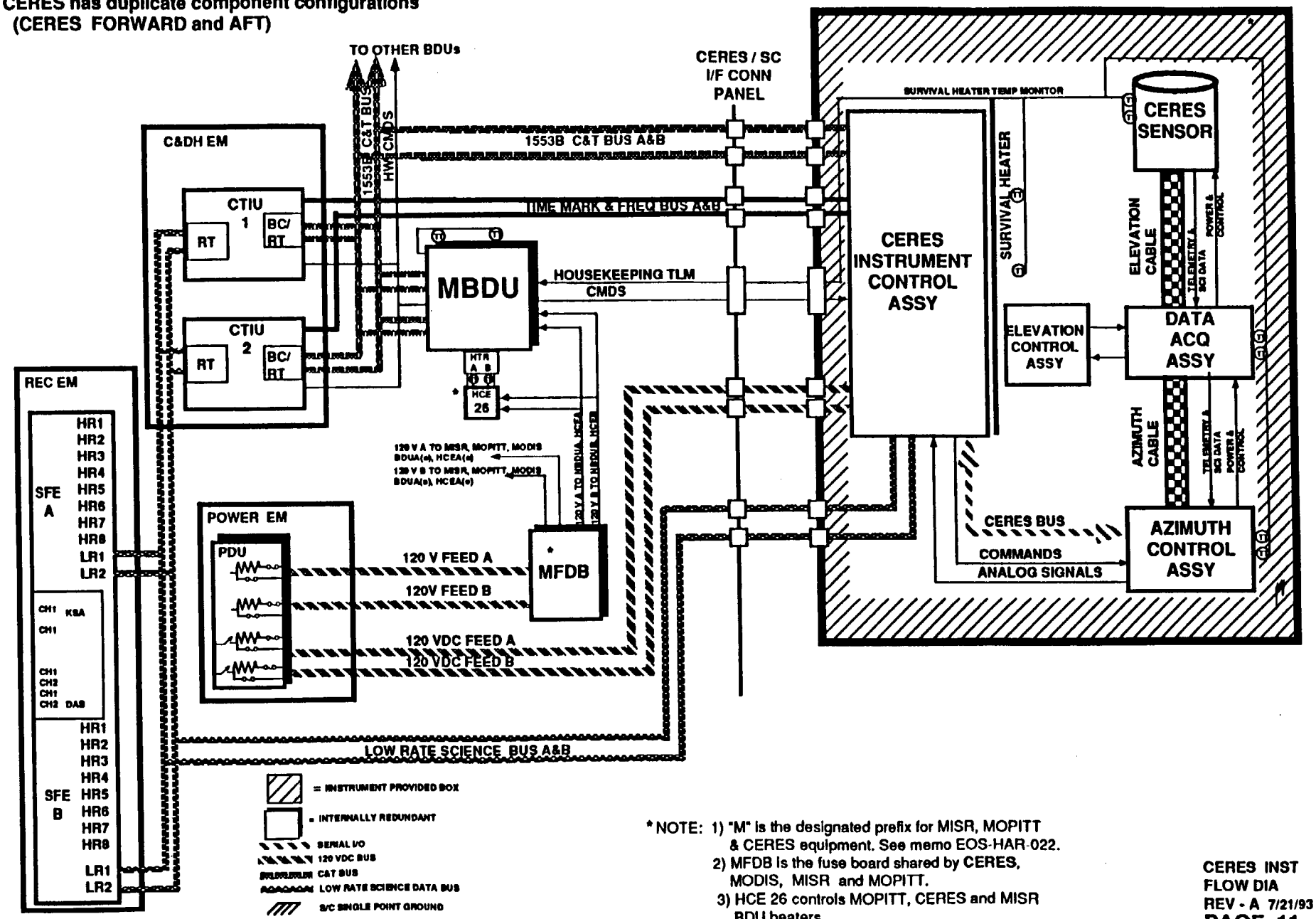

* NOTE: 1) "M" is the designated prefix for MISR, MOPITT & CERES equipment. See memo EOS-HAR-022.
2) MFDB is the fuse board shared by CERES, MODIS, MISR and MOPITT.
3) HCE 26 controls MOPITT, CERES and MISR BDU heaters.

MISR TOP LEVEL FLOW

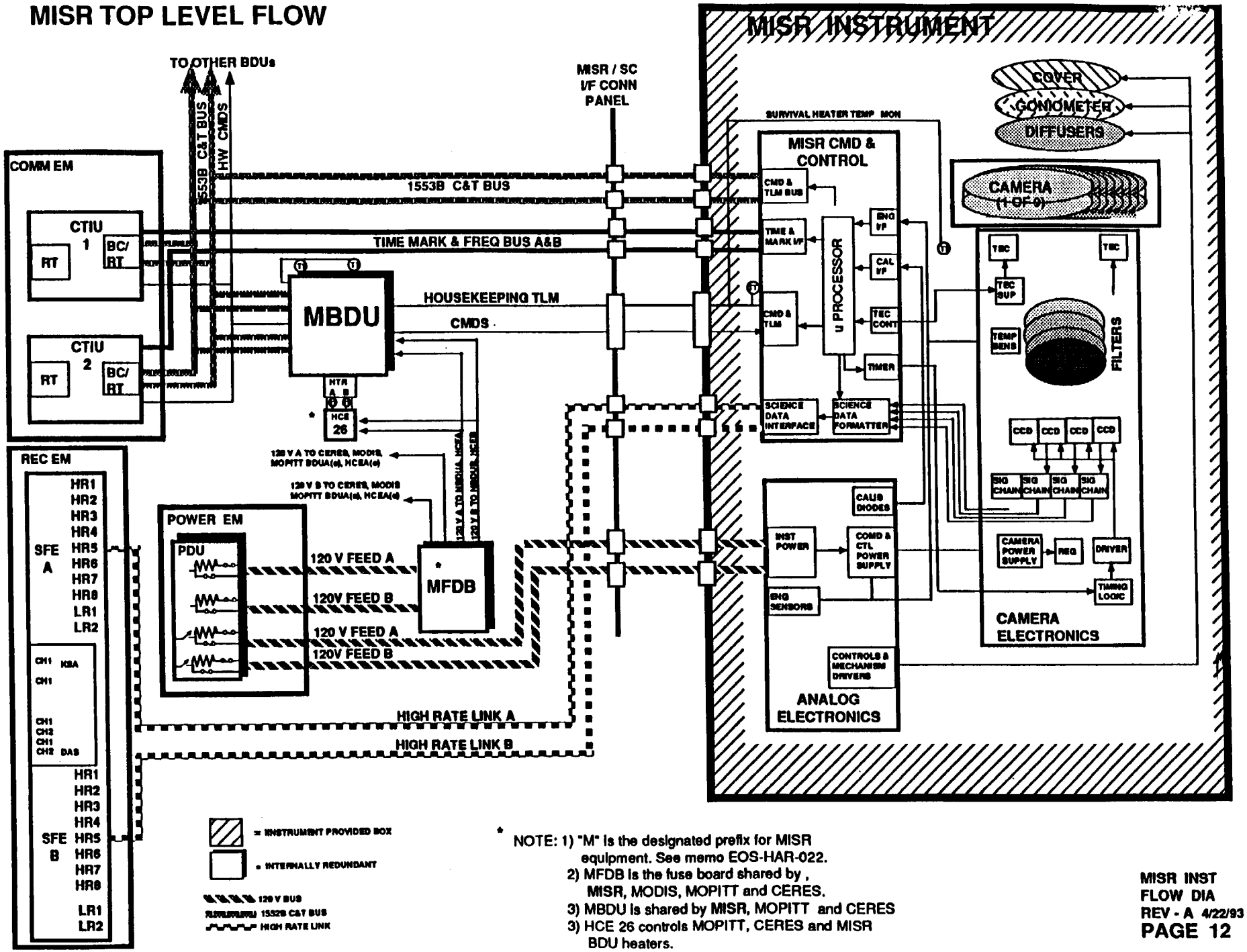

* NOTE: 1) "M" is the designated prefix for MISR equipment. See memo EOS-HAR-022.
2) MFDB is the fuse board shared by , MISR, MODIS, MOPITT and CERES.
3) MBDU is shared by MISR, MOPITT and CERES
3) HCE 26 controls MOPITT, CERES and MISR BDU heaters.

MISR INST
FLOW DIA
REV - A 4/22/93

MODIS TOP LEVEL FLOW

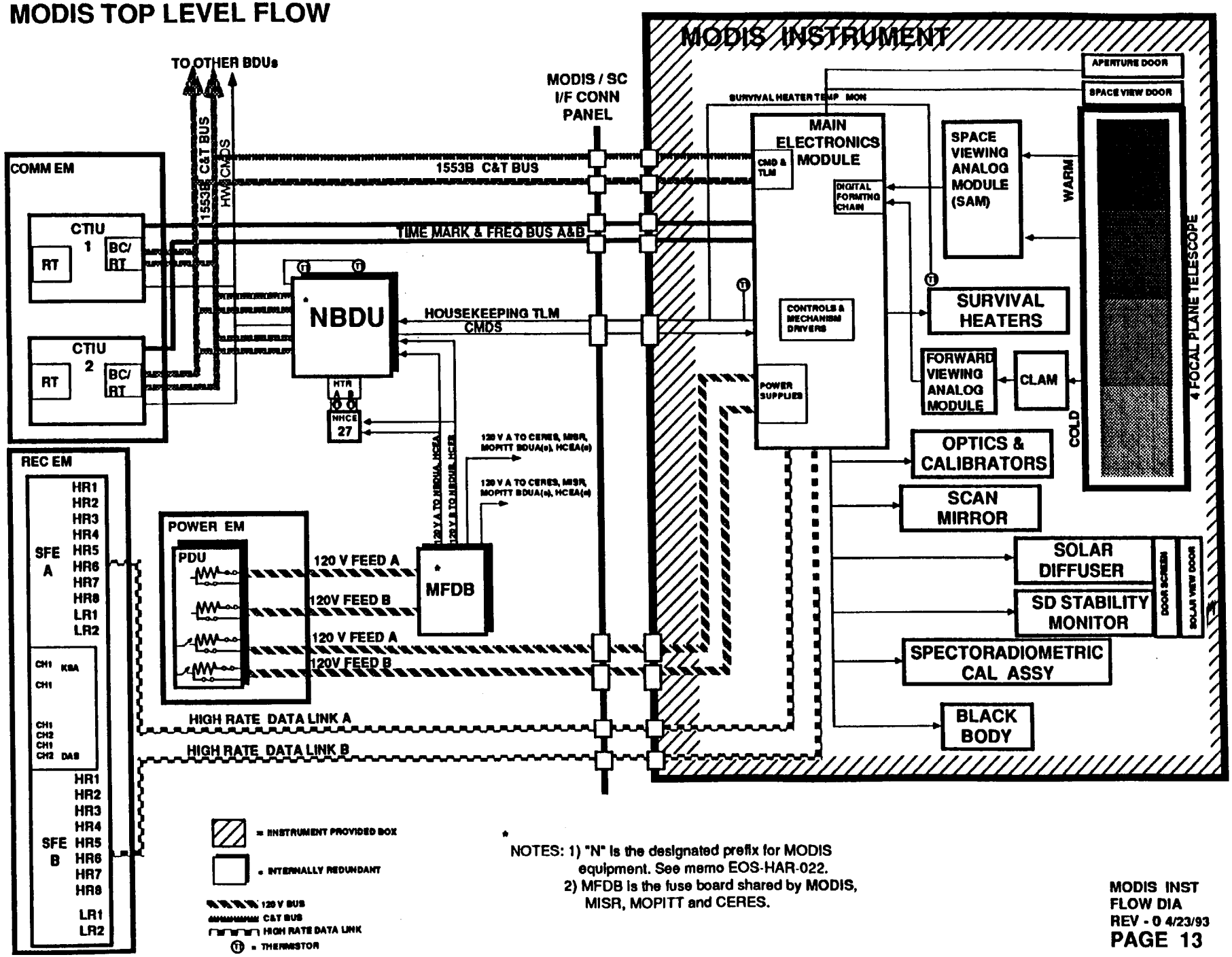

NOTES: 1) "N" is the designated prefix for MODIS equipment. See memo EOS-HAR-022.
2) MFDB is the fuse board shared by MODIS, MISR, MOPITT and CERES.

MODIS INST
FLOW DIA
REV - 0 4/23/93

MOPITT TOP LEVEL FLOW

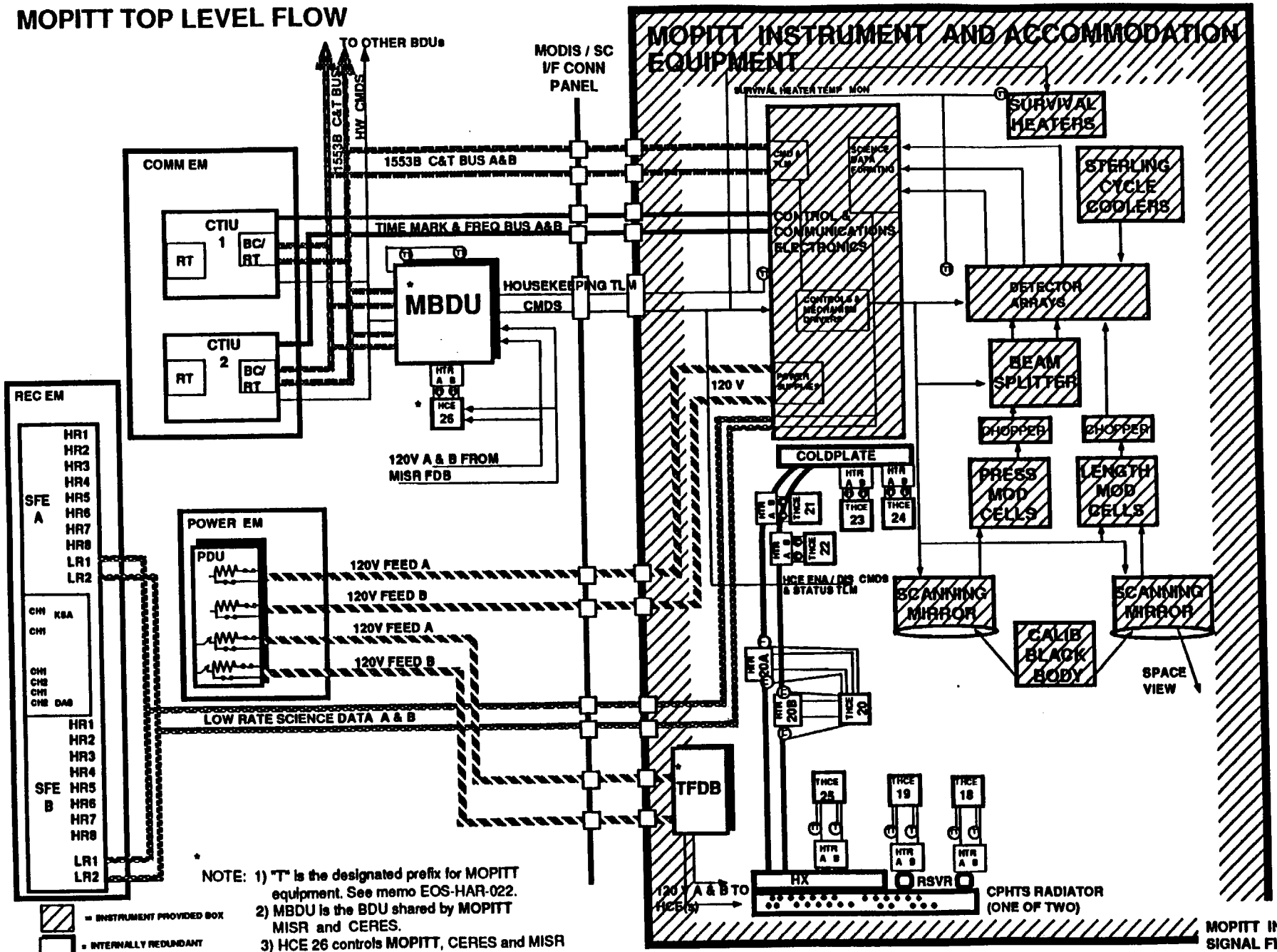

NOTE: 1) "T" is the designated prefix for MOPITT equipment. See memo EOS-HAR-022.
2) MBDU is the BDU shared by MOPITT MISR and CERES.
3) HCE 26 controls MOPITT, CERES and MISR BDU heaters.
4) HCE 18-26 control heaters for the MOPITT Accommodations equipment

MOPITT INST SIGNAL FLOW DIA
REV - A 7/23/93

MARTIN MARIETTA
ASTRO SPACE

EOS–DN–RES–029

DESIGN NOTE

TITLE: Propellant Budget for EOS–AM

AUTHOR: L. Christian Jul 29, 1993

AUTHOR'S MANAGER: H. Foulke DATE 8/3/93

SE&I MANAGER: S. Carey DATE 7/30/93

CHIEF ENGINEER: D. Longcoy DATE 7/30/93

REVISIONS

LETTER	DESCRIPTION	DATE	AUTHOR
–	Initial Release	05/08/92	T. Ford
A	Update of Propellant Budget	01/12/93	G. Weidman
B	Update of Propellant Budget to incorporate updated mass properties.	07/23/93	L. Christian

MARTIN MARIETTA
ASTRO SPACE

DESIGN NOTE SUMMARY

DN#: EOS-DN-RES-029 **Revision:** B **Date:** 07/23/93

Title: Propellant Budget for EOS-AM

Author: L. Christian **Source ID (ESTA, PD, Memo, etc.):**

Purpose/Questions Answered:

Define propellant requirements for the EOS-AM mission.

Summary/Answers:

To achieve the 7.5 year mission life with an injection orbit perigee altitude of 550 km, the EOS-AM spacecraft with the nominal dry mass and with the (4-2) 5.0 lbf thruster configuration in nominal operational mode requires 654.5 lbm of hydrazine. If the spacecraft dry mass is increased to its maximum (including contingencies), the spacecraft requires 723.5 lbm of hydrazine. If only two 5.0 lbf thrusters are operational (backup mode) for the nominal dry mass, the spacecraft requires 5.79 lbm of hydrazine from the 10% propellant margin for the nominal case to meet the mission requirements.

Recommendations: (Be Specific)	Accepted	Rejected	Baselined	Date

Open Items/Action Required	Responsible Person	Due Date

Comments

Form Completed By L. Christian **Date** 07/23/93 **Page** ___ **of** ___

TABLE OF CONTENTS

SECTION / PARAGRAPH	TITLE	PAGE
1	SUMMARY	1
2	OVERVIEW	1
2.1	Spacecraft Assumptions and Specifications:	1
2.2	Propulsion System Assumptions and Specifications:	2
3	ORBIT ACQUISITION AND MAINTENENCE	2
3.1	Orbit Acquisition	2
3.2	Orbit Maintenance	3
4	ATTITUDE CONTROL	4
5	PROPELLANT BUDGETS	5
6	REFERENCES	6
7	ATTACHMENT 1	13

LIST OF TABLES

TABLE	TITLE	PAGE
Table I.	ΔV and Propellant Use Requirements for Orbit Acquisition	3
Table II.	ΔV and Propellant Use Requirements for Orbit Maintenance	4
Table III.	Disturbance Torques during ΔV Maneuvers – Primary Mode	4
Table IV.	Disturbance Torques during ΔV Maneuvers – Backup Mode	5
Table V.	EOS–AM Budget Summary Nominal Load	7
Table VI.	EOS–AM Propellant Budget Nominal Load	8
Table VII.	EOS–AM Budget Summary Contingency Load	9
Table VIII.	EOS–AM Propellant Budget Contingency Load	10
Table IX.	EOS–AM Budget Summary Backup ΔV Mode	11
Table X.	EOS–AM Propellant Budget Backup ΔV Mode	12

1 SUMMARY

To achieve the 7.5 year mission life with a perigee altitude of 550 km, the EOS–AM spacecraft with the nominal dry mass and with the (4–2) 5.0 lbf thruster configuration in primary operational mode requires 654.5 lbm of hydrazine. If the spacecraft dry mass is increased to its maximum (including contingencies), the spacecraft requires 723.5 lbm of hydrazine. If only two 5.0 lbf thrusters are operational (backup mode) for the nominal dry mass, the spacecraft requires 5.79 lbm of hydrazine from the 10% propellant margin allotted for primary operation mode to meet the mission requirements.

The propellant load has increased 4.3 lbm for the nominal mass and decreased 14.0 lbm for the maximum mass (including contingencies) from the previous budget (Reference 1). The main changes to the spacecraft since Reference 1 are:

- The solar array has decreased to 478 ft^2 from 600 ft^2.
- The nominal dry mass has increased to 9059.2 lbm from 8708.1 lbm.
- The initial propellant pressure is 360 psi, down from 400 psi.
- The thruster configuration is (4–2) rather than (4+4).
- The maximum Isp is 227 sec, instead of 230 sec.
- The initial targetted inclination is 98.224 deg, instead of 98.201 deg.

The required propellant load could be decreased further by applying any of the following reductions: one, optimize the orbit ascent burns; two, tighten the launch window; three, relax the 10% propellant margin requirement; and four, reestimate the average atmospheric density (currently 2.6445 E–13 kg/m^3).

2 OVERVIEW

This document includes propellant budgets for three cases: one, the spacecraft dry mass is equal to the current best estimate mass, and all four thrusters are operational; two, the spacecraft dry mass is equal to the maximum mass, and all four thrusters are operational; and three, the dry mass is equal to the current best estimate mass, and two thrusters (backup mode) are operational. This propellant budget is an update of the propellant budget of Reference 1. All of the mission details and assumptions outlined in Sections 2.1.1 and 3 of Reference 1 still apply. The spacecraft and propulsion system details and assumptions follow.

2.1 Spacecraft Assumptions and Specifications:

Critical details and assumptions about the EOS–AM spacecraft configuration are:

- 9059.2 lbm nominal spacecraft dry mass. (Reference 2)
- 10300.0 lbm maximum spacecraft dry mass – margins and contingencies. (Reference 2)

- Updated spacecraft center of mass as per Reference 3.
- Updated disturbance torques. (See Tables III and IV)
- 478 ft^2 GaAs solar array. (Reference 6)
- 3% total propellant unusable residuals at end–of–life. (same as Reference 1)
- 10% propellant margin. (same as Reference 1)

2.2 Propulsion System Assumptions and Specifications:

Critical details and assumptions about the EOS–AM propulsion system are:

- (4–2) 5.0 lbf REA configuration, each canted 4.0°. (Reference 4)
- Six (6+6) 1.0 lbf REA configuration. (same as Reference 1, Reference 4)
- Updated 5.0 lbf REA and 1.0 lbf REA I_{SP} and thrust levels. (Reference 5)
- 360 psi initial propellant pressure. (Reference 9)
- Monopropellant propulsion system. (same as Reference 1)
- One propellant tank, total volume of 28,149 in^3. (same as Reference 1)
- No repressurization of propellant tank. (same as Reference 1)
- In–tank propellant temperature is constant at 528°R. (same as Reference 1)

3 ORBIT ACQUISITION AND MAINTENENCE

The mission description is the same as in Section 3, Reference 1, and is divided into orbit acquisition and orbit maintenence. The ACS duty cycle is 4.7% for all maneuvers. The minimum pulse width required of the ACS thrusters is 48 msec over a period of 1024 msec (Reference 8), which gives a duty cycle of 4.7%. The thrusters will usually be on more than 48 msec, but the minimum duty cycle gives the worst case I_{SP} value.

3.1 Orbit Acquisition

The orbit acquisition sequence and requirements are unchanged from Section 3.1 of Reference 1. The updates in the spacecraft mass properties (References 2 and 3), the disturbance torques (see Tables III and IV), and the I_{SP} and thrust levels for the 1.0 lbf and 5.0 lbf REAs (Reference 5) have changed the propellant use requirements. The orbit acquisition sequence for each of the three cases is shown in the detailed propellant budgets (Tables VI, VIII, and X) and is summarized in Table I below.

Table I. ΔV and Propellant Use Requirements for Orbit Acquisition

Mission Step	*Nominal*	*Maximum*	*Backup*
Earth Acquisition	0.35 lbm hydr	0.39 lbm hydr	0.34 lbm hydr
Perigee Raising (2 burns–primary, 4 burns–backup)	131.86 ft/sec	131.86 ft/sec	131.86 ft/sec
Correct Inclination	42.98 ft/sec	42.98 ft/sec	42.98 ft/sec
Orbit Trim	22.61 ft/sec	22.61 ft/sec	22.61 ft/sec
RSS of 3° Yaw Dispersions	5.26 ft/sec	5.26 ft/sec	5.26 ft/sec
Acquisition Drag Makeup	0.62 ft/sec	0.62 ft/sec	0.62 ft/sec
Angular Momentum Unloading	117.00 lbf–sec	117.00 lbf–sec	117.00 lbf–sec
Attitude Control	11.26 lbm hydr	13.39 lbm hydr	16.27 lbm hydr

3.2 Orbit Maintenance

The required drag makeup ΔV depends on the mission duration, level of solar activity over mission, the average drag area, and the spacecraft mass. (See Appendix 1 of Reference 7.) The ΔV requirement for drag makeup decreased since the solar array area decreased. The solar area has an area of 44.4 m^2, and the average array area throughout orbit is 28.27 m^2. The total on–orbit average area is 38.3 m^2 (assuming the spacecraft structure accounts for 10 m^2 of drag area), down from 45.5 m^2 in Reference 1. Using the equation in Appendix 1 of Reference 7 and an average atmospheric density of 2.6445 E–13 kg/m^3, the predicted drag on the spacecraft is 143153.1 lbm–ft/sec/yr. The drag makeup ΔV required in that year is the above value divided by the spacecraft mass at the start of each year.

The total inclination adjust is 135.505 ft/sec. Attachment 1 contains the analysis performed to derive the required inclination adjust velocity. The analysis assumes an initial targetted inclination of 98.224 deg, as opposed to the sun–synchronous inclination of 98.201 deg.

The inclination yaw dispersion and eccentricity correction velocities are unchanged from Section 3.2 of Reference 1, but the updates in the spacecraft mass properties (Reference 2 and 3), the disturbance torques (see Tables III and IV), and the I_{SP} and thrust levels for the 1.0 lbf and 5.0 lbf REAs (Reference 5) have changed the propellant use requirements. The orbit maintenance requirements for each of the three cases, including angular momentum unloading, are shown in the detailed propellant budgets (Tables VI, VIII, and X) and are summarized in Table II.

Table II. ΔV and Propellant Use Requirements for Orbit Maintenance

Maneuver	*Nominal*	*Maximum*	*Backup*
Drag Makeup (Average)	15.40 ft/sec	13.56 ft/sec	15.50 ft/sec
Inclination Adjust	92.53 ft/sec	92.53 ft/sec	92.53 ft/sec
3° Inclination Yaw Dispersion	4.72 ft/sec	4.72 ft/sec	4.72 ft/sec
Eccentricity Correction	3.64 ft/sec	3.64 ft/sec	3.64 ft/sec
Attitude Control	17.25 lbm hydr	20.07 lbm hydr	20.72 lbm hydr

4 ATTITUDE CONTROL

The attitude control system is unchanged from that of Reference 1. The initial earth acquisition and the momentum unloading are calculated as in Reference 1. The torque required from the ACS during ΔV manuevers has changed. The ΔV thruster configuration is a (4–2) configuration, instead of a (4+4) configuration (Reference 5), and the center of mass (Reference 3) has moved from that of Reference 1. Thus, the disturbance torques produced by the ΔV thrusters and the available torque from the ACS thrusters are different. The RSS disturbance torques produced by firing the ΔV thrusters are listed in Tables III and IV for primary and backup modes, respectively. Note that with only two thrusters firing, the backup mode has smaller disturbances on pitch and yaw. The roll disturbances are bigger for the backup mode due to the center of gravity (CG) offset. The CG offset terms cancel on the roll axis when all four thrusters fire, but add when only two thrusters fire.

Table III. Disturbance Torques during ΔV Maneuvers – Primary Mode

% of life completed	*Roll (ft–lbf)*	*Pitch (ft–lbf)*	*Yaw (ft–lbf)*
0	0.227	1.961	1.998
10	0.215	1.978	1.963
20	0.202	1.975	1.913
30	0.188	1.949	1.847
40	0.174	1.898	1.763
50	0.158	1.820	1.660
60	0.142	1.712	1.535
70	0.124	1.570	1.386
80	0.105	1.391	1.210
90	0.085	1.172	1.005
100	0.063	0.906	0.767

The propellant needed for the ACS thrusters to counteract the disturbance torques depends on the burn–time of the ΔV thrusters, the I_{SP} of the ACS thrusters, and the effective moment arms. The ACS thruster burn time is equal to the ΔV burn time multiplied by the ratio of the disturbance torque to the available torque. The mass of propellant needed is then equal to the ratio of the actual impulse to the specific impulse. The following equation (Reference 1) summarizes the calculation.

$$n = \frac{h \sum_{a=1}^{3} \frac{d_a}{r_a}}{\varrho \, g \, I_{SP}}$$

Where:

- **n** = Propellant used for ACS. (lbm)
- **h** = Propellant used for ΔV maneuver. (lbm)
- **a** = Spacecraft axis (Roll, Pitch, and Yaw, respectively).
- d_a = Disturbance about axis **a**. (ft–lbf)
- r_a = Effective moment arm of ACS thrusters for axis **a**. (ft)
- ϱ = Flow rate of propellant through ΔV thrusters. (slugs/sec)
- **g** = Earth gravity constant (32.174 ft/sec^2).
- I_{SP} = Specific impulse of ACS thrusters. (sec)

When the pitch ACS thrusters are fired, a small roll torque also results. This roll torque is added to the roll disturbance torque created by the ΔV thrusters for worst case. The coupled roll torque that results when firing the ACS pitch thrusters was not included in the previous analysis.

Table IV. Disturbance Torques during ΔV Maneuvers – Backup Mode

% of life completed	*Roll (ft–lbf)*	*Pitch (ft–lbf)*	*Yaw (ft–lbf)*
0	0.291	1.395	1.420
10	0.276	1.381	1.381
20	0.259	1.357	1.332
30	0.242	1.319	1.274
40	0.223	1.267	1.205
50	0.203	1.200	1.125
60	0.182	1.116	1.032
70	0.160	1.013	0.925
80	0.135	0.889	0.802
90	0.109	0.742	0.661
100	0.081	0.569	0.502

5 PROPELLANT BUDGETS

Tables V through X are propellant and ΔV budgets for the EOS–AM spacecraft. Tables V, VII, and IX are summaries of the detailed budgets in Tables VI, VIII, and X. Tables V and VI are the budgets for the nominal injection mass in primary operational mode. Tables VII and VIII are the budgets for the maximum injection mass in primary operational mode. Tables IX and X are the budgets for the nominal injection mass in backup operational mode.

6 REFERENCES

1) G. Weidman, EOS–AM Propellant Budget, Rev. A, EOS–DN–RES–029, 12 January 1993.

2) G. Gordon, EOS Mass and Power Budget Summaries, Rev. P, EOS–DN–RES–025, 07 June 1993.

3) A. M. DeLessio, Updated Spacecraft Mass Properties, EOS–STR–235, 23 June 1993.

4) D. Swanson, 4–2 Thruster Layout, Rev. A, EOS–DN–PRS–018, (To Be Released).

5) Rocket Research Co., Technical Information Package, 01 July 1992.

6) TRW Inc. Space and Electronics Group, Blanket Assembly ICD, 152104, Blanket Assembly Drawing Number 152104, 28 April 1993.

7) T. Ford, Propellant Budget for EOS–AM, EOS–DN–RES–029, 08 May 1992.

8) J. Boka, EOS–AM Initial Earth Acquisition, EOS–DN–GN&C–035, 02 September 1992.

9) Propulsion Subsystem Performance Specification, PS–20008617, (To Be Released).

Table V: EOS-AM Budget Summary Nominal Load

7/22/93

Spacecraft Dry Mass:	9,059.2 lbm
Pressurant Load:	1.5 lbm
Initial Hydrazine Load:	654.5 lbm
Spacecraft Injection Mass:	9,715.1 lbm
Injection Orbit Perigee Altitude:	550.0 km

Maneuver	Delta-V ft/sec	Hydrazine lbm	ΔV Isp sec			ACS Isp sec		
A/C Before Orbit Acquisition	_	0.35		_		209	-	209
Orbit Acquisition Burns	202.71	277.93	224	-	227	202	-	209
Acquisition drag makeup	0.62	0.85		224			202	
Acq. Momentum Unload	_	0.59					202	
On Orbit Drag Makeup	115.39	156.59	221	-	224	199	-	202
Inclination Adjust	97.25	131.92	222	-	223	200	-	201
Eccentricity Correction	3.64	4.88		221			199	
Momentum Unloading	_	4.51		_			199	
Residuals	_	17.33		_			_	
10% Propellant Margin	_	59.50		_			_	
Totals/ Average	**419.61**	**654.45**		**224**			**202**	

Table VI: EOS-AM Propellant Budget Nominal Load

7/22/93

		Injection Orbit Perigee					Spacecraft Dry Mass	Pressurant	Initial Hydrazine	Initial SC Mass	Initial Pressure	Initial Temp.
							lbm	lbm	lbm	lbm	psi	°R
		550					9,059.2	1.5	654.5	9,715.1	360	528
Year	Maneuver	Delta-V ft/sec	ACS Duty Cycle %	Delta-V ISP Seconds	ACS ISP Seconds	Delta-V Prop Required lbm	ACS Prop. Required lbm	Hydrazine Used lbm	Hydrazine Remaining lbm	Spacecraft Mass lbm	Press. psi	Temp. °R
	Initial Conditions							0.00	654.45	9,715.15	360	528
0	A/C Initial Earth Acquisition		4.7		209.5		0.35	0.35	654.11	9,714.80	360	528
0	5 km Δa dispersion	8.850	4.7	227.1	209.5	11.79	0.39	12.52	641.93	9,702.63	360	528
0	Raise Perigee	67.880	4.7	226.9	208.9	90.01	3.02	105.55	548.91	9,609.60	348	528
0	Raise Perigee	55.130	4.7	226.0	205.6	72.77	2.84	181.15	473.30	9,534.00	280	528
0	Correct Inclination	42.980	4.7	225.2	203.8	56.53	2.38	240.06	414.39	9,475.09	242	528
0	Trim (2 Burns)	22.610	4.7	224.6	202.7	29.67	1.33	271.07	383.39	9,444.08	218	528
0	RSS 3° Yaw Dispersions	5.260	4.7	224.3	202.2	6.90	0.32	278.28	376.17	9,436.87	208	528
0	Acquisition drag makeup	0.620	4.7	224.2	202.1	0.81	0.04	279.13	375.32	9,436.02	205	528
0	Acq. Momentum Unload		4.7		202.1		0.59	279.72	374.73	9,435.43	205	528
1	Drag Makeup	15.172	4.7	224.2	202.1	19.87	0.90	300.49	353.96	9,414.66	205	528
2	Drag Makeup	15.205	4.7	224.0	201.8	19.89	0.92	321.31	333.15	9,393.84	199	528
3	Drag Makeup	15.239	4.7	223.8	201.5	19.91	0.92	342.13	312.32	9,373.01	193	528
4	Drag Makeup	15.273	4.7	223.6	201.2	19.93	0.94	363.00	291.45	9,352.14	187	528
4	Inclination Adjust	92.53	4.7	223.4	201.0	119.94	5.61	488.55	165.90	9,226.60	182	528
4	3°Inclination Yaw dispersion	4.718	4.7	222.1	199.7	6.10	0.27	494.92	159.53	9,220.22	155	528
5	Drag Makeup	15.526	4.7	222.0	199.7	20.06	0.89	515.88	138.58	9,199.27	154	528
6	Drag Makeup	15.561	4.7	221.8	199.5	20.08	0.84	536.80	117.65	9,178.35	150	528
7	Drag Makeup	15.597	4.7	221.6	199.3	20.10	0.86	557.77	96.69	9,157.38	147	528
7.5	Drag Makeup	7.816	4.7	221.4	199.2	10.07	0.40	568.24	86.22	9,146.91	144	528
7.5	Eccentricity Correction	3.642	4.7	221.3	199.1	4.69	0.19	573.12	81.34	9,142.03	142	528
7.5	Momentum Unloading		4.7		199.1		4.51	577.63	76.82	9,137.52	142	528
	TOTAL:					549.12	28.51					
	Residuals					17.33		594.96	59.50	9,120.19		
	10% Propellant Margin					59.50		654.45	0.00	9,060.70		

Table VII: EOS-AM Budget Summary Contingency Load

7/22/93

Spacecraft Dry Mass:	**10,300.0** lbm
Pressurant Load:	**1.2** lbm
Initial Hydrazine Load:	**723.5** lbm
Spacecraft Injection Mass:	**11,024.7** lbm
Injection Orbit Perigee Altitude	**550.0** km

Maneuver	**Delta-V** ft/sec	**Hydrazine** lbm	**ΔV Isp** sec			**ACS Isp** sec		
A/C Before Orbit Acquisition	_	0.39		_			209	
Orbit Acquisition Burns	202.71	316.42	223	-	227	201	-	209
Acquisition drag makeup	0.62	0.97		223			201	
Acq. Momentum Unload	_	0.58		_				
On Orbit Drag Makeup	101.62	158.56	219	-	223	200	-	201
Inclination Adjust	97.25	151.57	220	-	222	198	-	200
Eccentricity Correction		5.63		219			198	
Momentum Unloading	_	4.43		_			198	
Residuals	_	19.16		_			_	
10% Propellant Margin	_	65.77		_			_	
Totals/ Average	**402.20**	**723.49**		**224**			**201**	

Table VIII: EOS-AM Propellant Budget Contingency Load 7/22/93

		Injection Orbit Perigee					Spacecraft Dry Mass	Pressurant	Initial Hydrazine	Initial SC Mass	Initial Pressure	Initial Temp.
							lbm	lbm	lbm	lbm	psi	°R
		550	(Prior to First Orbit Acquisition Burn)				10,300.0	1.2	723.5	11,024.7	360	528
Year	Maneuver	Delta-V ft/sec	ACS Duty Cycle %	Delta-V ISP Seconds	ACS ISP Seconds	Delta-V Prop Required lbm	ACS Prop. Required lbm	Hydrazine Used lbm	Hydrazine Remaining lbm	Spacecraft Mass lbm	Press. psi	Temp. °R
	Initial Conditions							0.00	723.49	11,024.70	360	528
0	A/C Initial Earth Acquisition		4.7		209.5		0.39	0.39	723.10	11,024.31	360	528
0	5 km Δa dispersion	8.850	4.7	227.1	209.5	13.37	0.44	14.20	709.29	11,010.51	360	528
0	Raise Perigee	67.880	4.7	226.9	208.7	102.08	3.45	119.73	603.76	10,904.98	344	528
0	Raise Perigee	55.130	4.7	225.5	204.5	82.67	3.43	205.82	517.67	10,818.88	257	528
0	Correct Inclination	42.980	4.7	224.5	202.5	64.30	2.98	273.10	450.39	10,751.60	214	528
0	Trim (2 Burns)	22.610	4.7	223.6	201.3	33.79	1.67	308.55	414.93	10,716.15	189	528
0	Trim	0.000	4.7	223.2	200.8	0.00	0.00	308.55	414.93	10,716.15	178	528
0	Orbit Acquisition Burn 6	0.000	4.7	223.2	200.8	0.00	0.00	308.55	414.93	10,716.15	178	528
0	Orbit Acquisition Burn 7	0.000	4.7	223.2	200.8	0.00	0.00	308.55	414.93	10,716.15	178	528
0	RSS 3° Yaw Dispersions	5.260	4.7	223.2	200.8	7.86	0.40	316.81	406.68	10,707.89	178	528
0	Acquisition drag makeup	0.620	4.7	223.1	200.7	0.93	0.05	317.78	405.70	10,706.92	175	528
0	Acq. Momentum Unload		4.7		200.7		0.58	318.37	405.12	10,706.34	175	528
1	Drag Makeup	13.371	4.7	223.1	200.7	19.96	1.02	339.35	384.14	10,685.36	175	528
2	Drag Makeup	13.397	4.7	222.8	200.4	19.98	1.05	360.38	363.11	10,664.32	169	528
3	Drag Makeup	13.424	4.7	222.6	200.1	20.01	1.05	381.44	342.05	10,643.27	164	528
4	Drag Makeup	13.450	4.7	222.3	199.9	20.03	1.04	402.51	320.98	10,622.20	159	528
4	Inclination Adjust	92.530	4.7	222.0	199.7	136.91	7.31	546.74	176.75	10,477.97	154	528
4	3°Inclination Yaw dispersion	4.718	4.7	220.3	198.5	6.98	0.36	554.08	169.41	10,470.62	128	528
5	Drag Makeup	13.672	4.7	220.2	198.4	20.22	1.05	575.35	148.14	10,449.36	127	528
6	Drag Makeup	13.700	4.7	220.0	198.3	20.24	1.00	596.58	126.90	10,428.12	124	528
7	Drag Makeup	13.728	4.7	219.7	198.1	20.26	1.02	617.87	105.62	10,406.84	121	528
7.5	Drag Makeup	6.878	4.7	219.5	198.0	10.15	0.48	628.50	94.99	10,396.21	118	528
7.5	Eccentricity Correction	3.642	4.7	219.3	197.9	5.37	0.26	634.13	89.36	10,390.58	117	528
7.5	Momentum Unloading		4.7		197.9		4.43	638.56	84.93	10,386.14	116	528
						605.11	33.45					
	Residuals					19.16		657.72	65.77	10,366.99		
	10% Propellant Margin					65.77		723.49	0.00	10,301.22		

Table IX: EOS-AM Budget Summary Backup ΔV Mode

7/22/93

Spacecraft Dry Mass:	9,059.2 lbm
Pressurant Load:	1.7 lbm
Initial Hydrazine Load w/o Margin:	600.7 lbm
Injection Mass w/o Margin:	9,661.7 lbm
Injection Orbit Perigee Altitude:	550.0 km

Maneuver	Delta-V ft/sec	Hydrazine lbm	ΔV Isp sec			ACS Isp sec		
A/C Before Orbit Acquisition	_	0.35		_		209	-	209
Orbit Acquisition Burns	202.71	281.61	225	-	227	203	-	209
Acquisition drag makeup	0.62	0.86		225			203	
Acq. Momentum Unload	_	0.58					203	
On Orbit Drag Makeup	116.12	157.93	222	-	225	199	-	203
Inclination Adjust	97.25	132.69	223	-	224	199	-	201
Eccentricity Correction	3.64	4.84		222			200	
Momentum Unloading	_	4.40		_			200	
Residuals	_	17.50		_			_	
Nominal 10% Propellant Margin		59.50						
Propellant Used from Margin for Backup	_	5.79		_			_	
Totals/ Average	**420.34**	**654.46**		**225**			**203**	

Table X: EOS-AM Propellant Budget Backup ΔV Mode

7/22/93

		Injection Orbit Perigee					Spacecraft Dry Mass	Pressurant	Initial Hydrazine	Initial SC Mass	Initial Pressure	Initial Temp.
							lbm	lbm	lbm	lbm	psi	°R
		550	(Prior to First Orbit Acquisition Burn)				9,059.2	1.7	600.7	9,661.7	360	528
Year	Maneuver	Delta-V ft/sec	ACS Duty Cycle %	Delta-V ISP Seconds	ACS ISP Seconds	Delta-V Prop Required lbm	ACS Prop. Required lbm	Hydrazine Used lbm	Hydrazine Remaining lbm	Spacecraft Mass lbm	Press. psi	Temp. °R
	Initial Conditions							0.00	600.75	9,661.66	360	528
0	A/C Initial Earth Acquisition		4.7		209.5		0.35	0.35	600.40	9,661.31	360	528
0	5 km Δa dispersion	8.850	4.7	227.1	209.5	11.72	0.61	12.67	588.07	9,648.99	360	528
0	Raise Perigee	30.558	4.7	226.9	209.0	40.38	2.13	55.18	545.57	9,606.48	350	528
0	Raise Perigee	30.688	4.7	226.6	207.5	40.44	2.23	97.85	502.89	9,563.81	318	528
0	Raise Perigee	30.817	4.7	226.2	206.2	40.50	2.35	140.70	460.04	9,520.96	292	528
0	Raise Perigee	30.948	4.7	225.8	205.2	40.55	2.41	183.67	417.08	9,477.99	270	528
0	Correct Inclination	42.980	4.7	226.2	206.2	56.43	3.28	243.38	357.37	9,418.28	292	528
0	Trim (2 Burns)	22.610	4.7	224.9	203.2	29.44	1.85	274.68	326.07	9,386.98	229	528
0	RSS 3° Yaw Dispersions	5.260	4.7	224.6	202.7	6.84	0.43	281.96	318.79	9,379.70	218	528
0	Acquisition drag makeup	0.620	4.7	224.5	202.6	0.81	0.05	282.81	317.93	9,378.84	216	528
0	Acq. Momentum Unload		4.7		202.6		0.58	283.39	317.35	9,378.27	216	528
1	Drag Makeup	15.264	4.7	224.5	202.6	19.84	1.27	304.50	296.25	9,357.16	216	528
2	Drag Makeup	15.299	4.7	224.3	202.3	19.85	1.25	325.60	275.14	9,336.05	209	528
3	Drag Makeup	15.333	4.7	224.2	202.0	19.87	1.24	346.71	254.04	9,314.95	204	528
4	Drag Makeup	15.368	4.7	224.0	201.7	19.88	1.21	367.80	232.94	9,293.86	198	528
4	Inclination Adjust	92.530	4.7	223.8	201.5	118.92	7.40	494.11	106.63	9,167.54	193	528
4	3°Inclination Yaw dispersion	4.718	4.7	222.7	200.2	6.05	0.33	500.49	100.25	9,161.16	166	528
5	Drag Makeup	15.626	4.7	222.6	200.2	20.00	1.01	521.51	79.23	9,140.15	165	528
6	Drag Makeup	15.662	4.7	222.4	200.0	20.02	1.03	542.56	58.18	9,119.09	161	528
7	Drag Makeup	15.698	4.7	222.3	199.9	20.04	0.95	563.55	37.20	9,098.11	158	528
7.5	Drag Makeup	7.867	4.7	222.1	199.7	10.03	0.43	574.01	26.74	9,087.65	154	528
7.5	Eccentricity Correction	3.642	4.7	222.0	199.6	4.64	0.20	578.85	21.89	9,082.81	153	528
7.5	Momentum Unloading		4.7		199.6		4.40	583.25	17.50	9,078.41	152	528
	TOTAL:					546.26	36.99					
	Residuals					17.50		600.75	0.00	9,060.91		
	Nominal Propellant Margin					59.5						
	Propellant Used from Margin for Backup					5.79						

7 ATTACHMENT 1

Interoffice Memo

MARTIN MARIETTA

EOS - GN&C - 294

To: Terry Ford *MS:* NP-2G *Ext:* 8*776-2461

From: P. E. Jasper *MS:* NP-2L *Ext:* 8*773-7136

Date: 28 July 1993

Re: Determination of Worst Case ΔV Requirement for Inclination Change Maneuvers for EOS

Introduction

This memo is an update to GN&C Memo 282 bearing the same title. The purpose of this study was to find the maximum ΔV necessary to correct the EOS AM inclination so that the descending node always remains in the 10:30 AM ± 15 minute Mean Local Time (MLT) window. This was accomplished by selecting the two worst possible combinations of initial inclination and initial node placement, finding the resultant ΔVs and then biasing the target inclination high to equalize the ΔV corrections for both, and thus minimize the ΔV requirement. The cases chosen were as follows:

Case 1.

At orbit injection, the descending node is positioned at the 10:15 AM western MLT boundary . Although the target orbit inclination is 98.201°, the injection orbit inclination is the -3σ value 98.101°. Thus, the node is already drifting to the west out of the MLT window. This requires an immediate inclination correction of ΔV_1. The first correction must raise the inclination to a value which causes the drift of the node to reverse and progress toward the eastern boundary, stop at the 10:45 AM point and then return to the western boundary. At this point the inclination is increased once again by a sufficient amount ΔV_2 such that the node drifts toward the east reverses and returns to the western boundary just as the mission ends after 7.5 years. For Case 1, the total ΔV necessary to maintain the descending node within the MLT window is 42.3 meters/sec without assuming a launch vehicle target inclination bias.

Case 2.

At orbit injection, the descending node is positioned at the 10:45 AM eastern MLT boundary. Although the target orbit inclination is 98.201°, the injection orbit inclination is the + 3σ value 98.301°. Thus the node is drifting out of the MLT window towards the east requiring an immediate correction ΔV_1 to reduce the inclination to i_{SYNCH} = 98.201° The node then drifts back to the western boundary where a second inclination correction ΔV_2 causes the node to drift back to the east, reverse, and return to the western boundary just as the mission ends after 7.5 years. For Case 2, the total ΔV necessary to maintain the descending node within the MLT window is 36.3 meters/sec without assuming a launch vehicle target inclination bias.

Summary

By targeting the launch vehicle injection inclination to be 98.201° + 0.023° = **98.224°**, the total ΔV for both Cases 1 and 2 equalize to the same value, **39.3 meters/sec**. Results are summarized in Table 1. It can be shown by logic that any other intermediate set of conditions of node location between 10:15 AM and 10:45 AM or inclination in the range 98.224± 0.1 degree will yield a smaller value of ΔV. The uncertainty in the accuracy of the solar perturbation equations used to obtain these results is estimated to be ±5%.The recommended total ΔV is thus **41.3** meters/sec.

Technical Comments

Program SUN_SYNCH written by Joe Herberg calculates the effect of the solar perturbation on the orbit at each user-defined time step. SUN_SYNCH was run for the above input conditions for Cases 1 and 2 using the equations in Reference 1 and the basic equation for secular inclination drift below.

$$\frac{\Delta i}{day} = \frac{3N\pi\mu_s}{8\eta^2 r_s^3}(1+\cos i_s)^2 \sin i_0 \sin 2\Omega_{oc}$$

where:

N = number of orbits per day = 14.5625

η = spacecraft mean motion = $\sqrt{\frac{\mu}{a^3}}$ = 0.00106 /sec.

μ_S = solar gravitational constant = 1.327E+11 km^3/sec^2

r_s = mean distance to sun from Earth center

i_0 = initial satellite inclination

Ω_{oc} = o'clock angle = -22.50° for 10:30 AM descending node

i_s = solar obliquity = 23.44°

The following comments are presented as background information for this study.

When the inclination is 98.201° = i_{SYNCH}, the orbit is sun-synchronous and the node is stationary relative to the MLT window. (This assumes that the semi-major axis is also at the synchronous value).

When the inclination is higher than 98.201°, the node will drift east toward the 10:45 AM MLT boundary.

When the inclination is below 98.201°, the node will drift west toward the 10:15 AM MLT boundary.

The orbit inclination slowly decreases due to solar perturbations. In other words, the orbit inclination is tending to become more polar and thus the nodal regression rate is slowing down. The result of the solar perturbation is a constant component of nodal drift toward the western 10:15 AM MLT boundary.

Inclination dispersion at orbit injection is assumed to be $\pm 0.1° \; 3\sigma$.

Technical Comments Cont'd

Figure 1 (Case 1), and Figure 2 (Case 2) show the variation in the mean local time of the descending node and the orbit inclination throughout the 7.5 year mission life. The curves are based on outputs from SUN_SYNCH using an integration time step of one day. In Figure 1, the injection inclination (either 98.101 or 98.124°) has already been corrected at the start of the mission to 98.306° . In Figure 2, the injection inclination (98.301° or 98.324°) has already been corrected at the start of the mission to 98.200° .

The ΔV necessary to change the inclination by Δi is given by:

$$\Delta V = 2V*\sin(\Delta i/2) \qquad \text{V is orbital velocity in km/sec}$$

$$\Delta V = 2*7.5044*\sin(\Delta i/2)*1000 = 131\Delta i \text{ meters/sec} \qquad \text{for small } \Delta i \text{ in degrees}$$

The ΔVs necessary to perform the inclination correction can be calculated from the values of inclination tagged in Figures 1 and 2.

For Case 1 with a target inclination of 98.224°, $\Delta i_1 = 98.306° - 98.124° = 0.182°$, $\Delta V_1 = 23.84$ m/sec
$\Delta i_2 = 98.212° - 98.094° = 0.118°$, $\Delta V_2 = 15.46$ m/sec

$\Delta V_{TOTAL} = 39.3$ m/sec

For Case 2 with a target inclination of 98.224°, $\Delta i_1 = 98.324° - 98.200° = 0.124°$, $\Delta V_1 = 16.24$ m/sec
$\Delta i_2 = 98.270° - 98.094° = 0.176°$, $\Delta V_2 = 23.05$ m/sec

$\Delta V_{TOTAL} = 39.3$ m/sec

Table 1

Case	Target Inclination	Injection Inclination	Initial Node Location	Initial ΔV Correction meters/sec	Final ΔV Correction meters/sec	Total Δ Correcti meters/
1	98.201°	98.101° (-3 sigma)	10:15 AM	26.84	15.46 @ 6.83 yr	42.3
2	98.201°	98.301° (+3 sigma)	10:45 AM	13.24	23.05 @ 3.41 yr	36.3
1	98.224°	98.124° (-3 sigma)	10:15 AM	23.84	15.46 @ 6.83 yr	39.3
2	98.224°	98.324° (+3 sigma)	10:45 AM	16.24	23.05 @ 3.41 yr	39.3

References:

1. Response to System Concept Review Recommendation No. 25, J. H. Herberg, EOS-GN&C -084, October 1990, pp.5-7

Peter E. Jasper

Peter E. Jasper
Mission Design

FIGURE 1

CASE 1

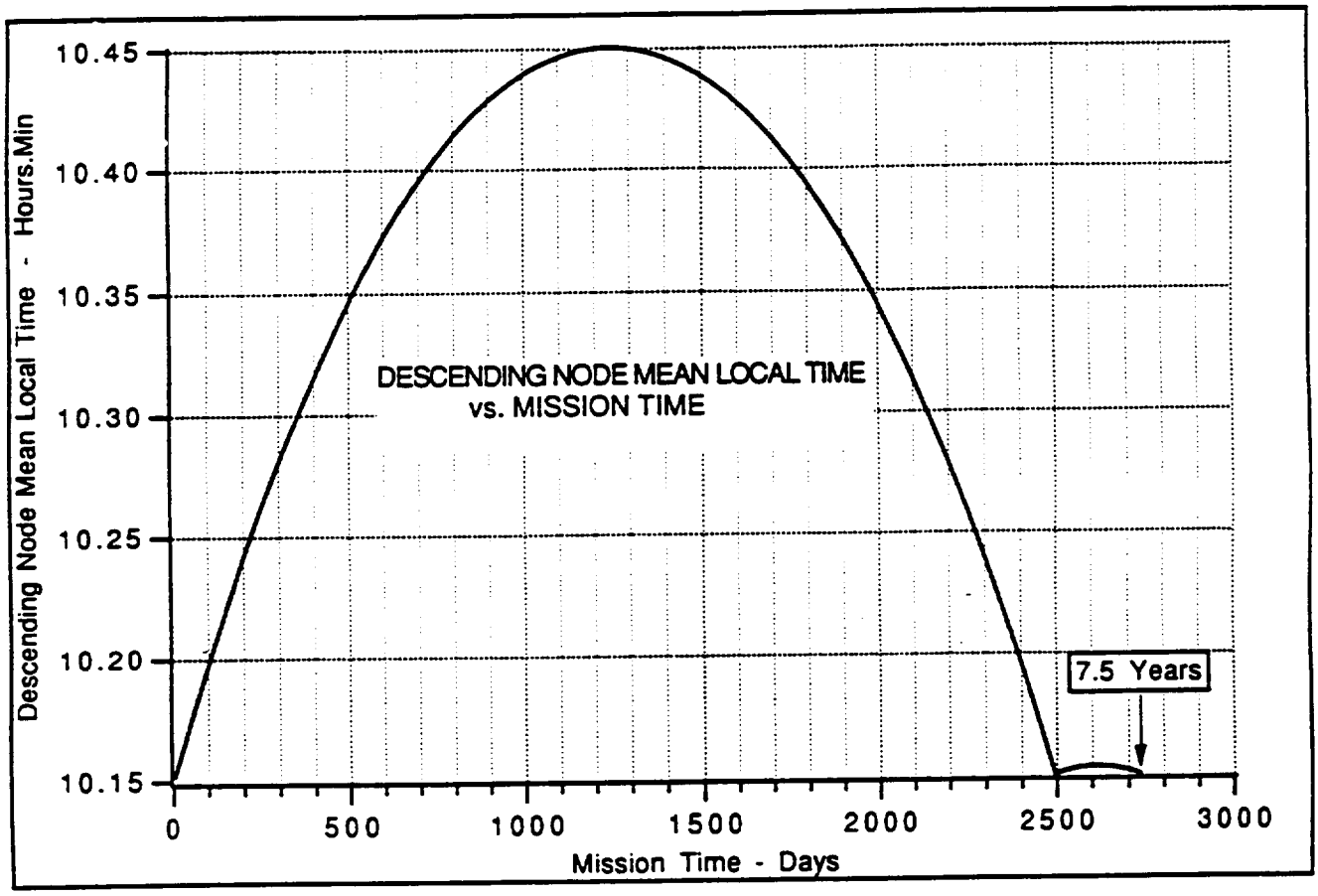

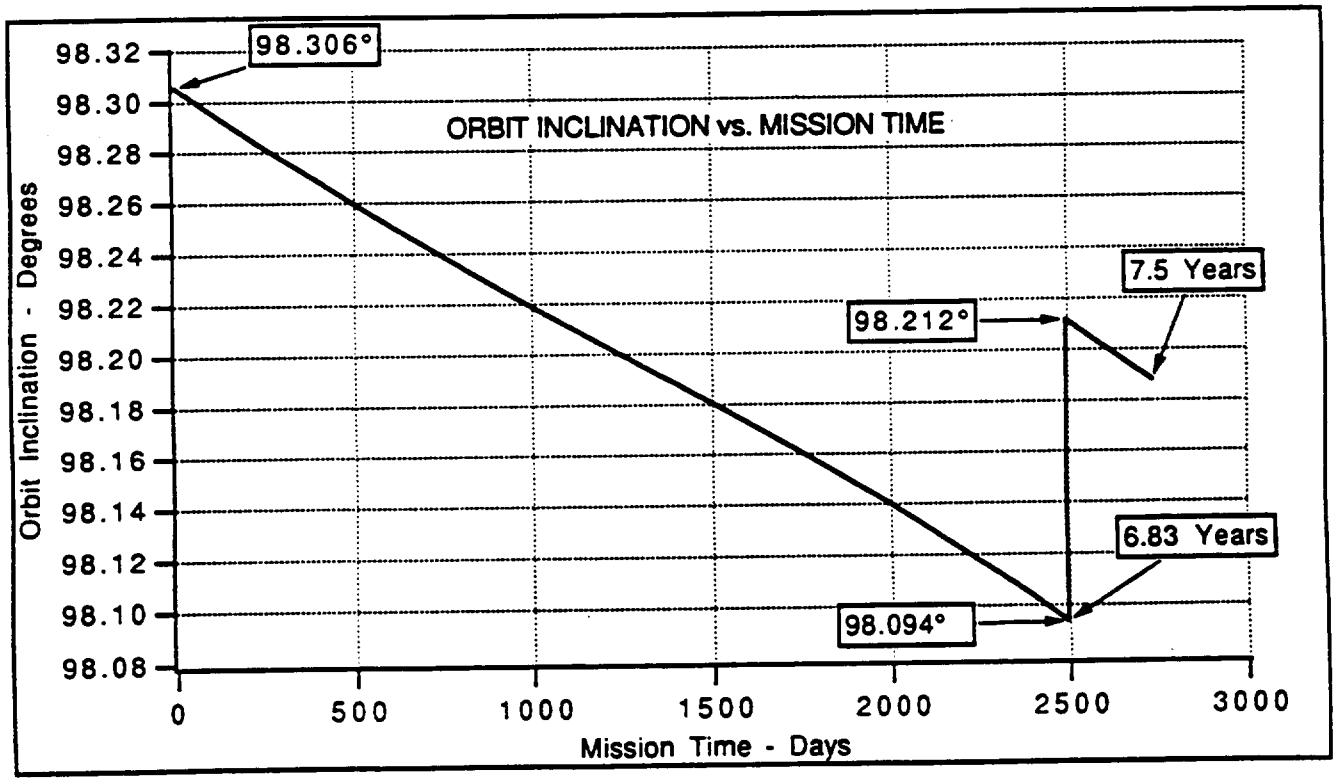

FIGURE 2

CASE 2

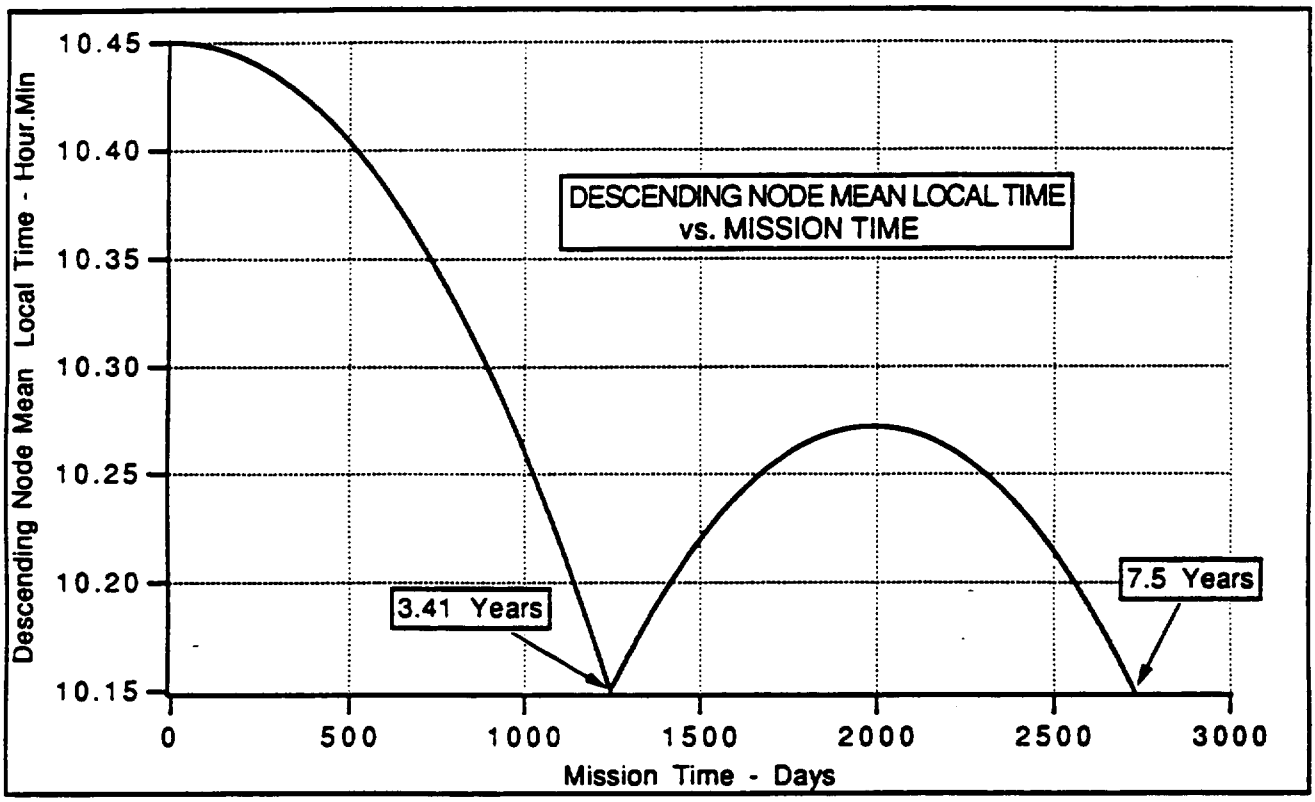

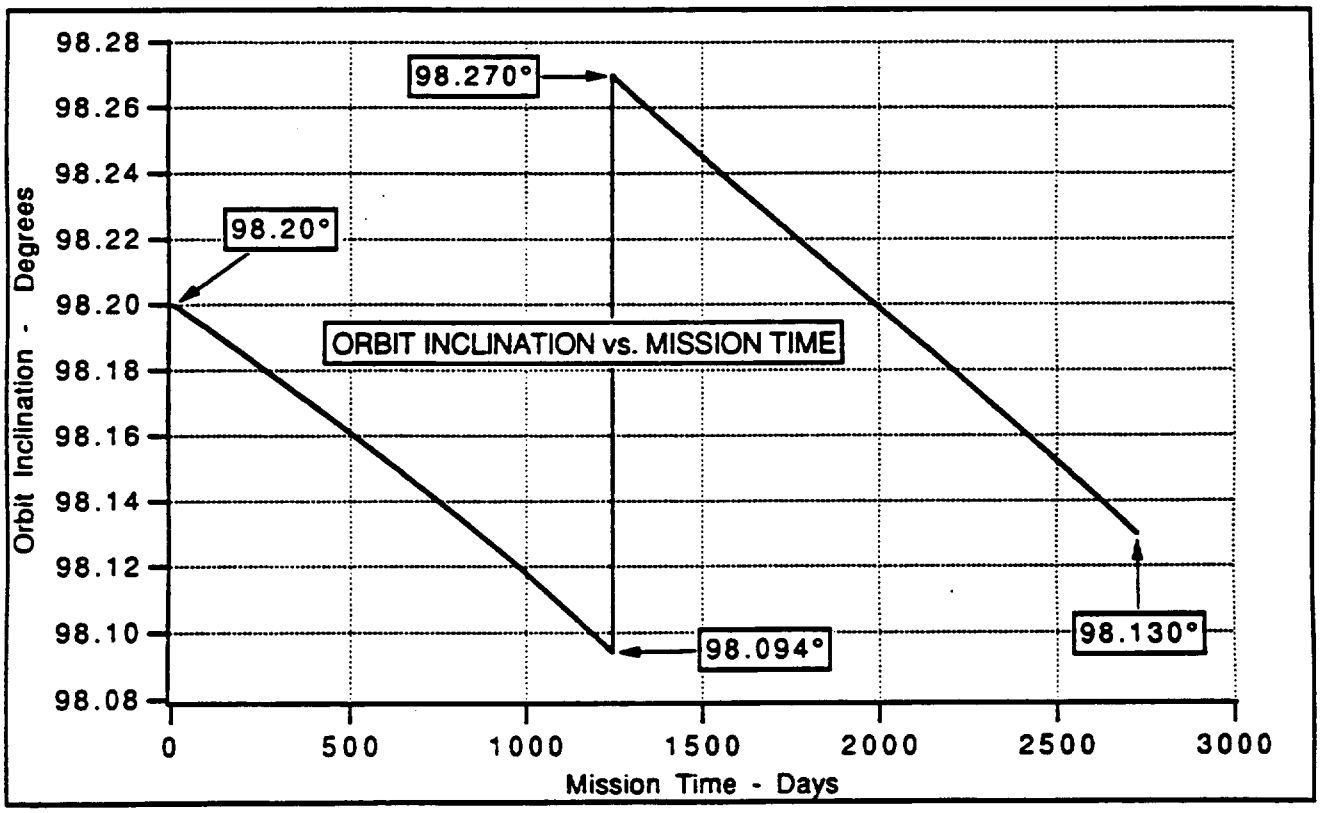

```
      PROGRAM SUN_SYNCH

c     computes worst case delta_v for inclination correction over
c     life of eos am.  written by joe herberg on 7/15/93.

      10:15 am = -26.25 deg
      10:30 am = -22.50 deg
c     10:45 am = -18.75 deg

      implicit none

      real*8 j2,re,u,we,pi
      real*8 a,e,incl,node,node_rate,incl_rate
      real*8 ss_incl,ss_node,ss_node_rate,node_error
      real*8 time,time_step,time_limit,time_limit_in_years
      real*8 orbits_per_day,mean_motion,us,rs,is
      real*8 sun_node_angle,o_clock_angle,incl_rate_dpy, hour

c ************************ start initialization ************************

      open(unit=12,status='new',file='sun_synch.out')

c     set constants

      j2 = 0.001082626076d0
      re = 6378.137d0
      u = 398600.436d0
      we = 0.0041780742163d0
      pi = 3.141592653589793d0

c     set sun synchronous orbit elements.

      a = 7081.131457d0
      e = 0.0012d0
      ss_incl = 98.2d0

c     compute solar gravity parameters.

      orbits_per_day = 86400.0d0/(dsqrt(a**3/u)*2.0d0*pi)
      mean_motion = dsqrt(u/a**3)
      us = 1.327d11
      rs = 149600856.0d0
      is = 23.44d0

c     read time input data.

      write(6,*)'enter time step in days'
      read(5,*)time_step

      write(6,*)'enter time limit (years)'
      read(5,*)time_limit_in_years
      time_limit = time_limit_in_years*365.25d0

c     set initial time

      time = 0.0d0

c     set sun synchronous node rate and node

      ss_node_rate = 360.0d0/365.25d0
      ss_node = -22.5d0

c     initialize node and inclination

      write(6,*)'enter initial inclination (degrees)'
      read(5,*)incl
```

```
      write(6,*)'enter initial node (degrees)'
      read(5,*)node

************************* end initialization ************************

      do while (time.lt.time_limit)

      compute node rate (deg/day)

      node_rate = -1.5d0*j2*dsqrt(u/a**3)*(re/a/(1.0d0-e**2))**2
     $*dcos(incl*pi/180.0d0)*180.0d0/pi*86400.0d0

      compute inclination decrease rate (deg/day)

      sun_node_angle = ss_node + 22.5d0

      o_clock_angle = node - sun_node_angle

        hour = 10.30 + (node_error/3.75)*15./100

      incl_rate = 3.0d0/8.0d0*orbits_per_day*pi/mean_motion**2*
     $us/rs**3*(1.0d0 + dcos(is*pi/180.0d0))**2*dsin(incl*pi/180.0d0)*
     $dsin(2.0d0*o_clock_angle*pi/180.0d0)*180.0d0/pi

     update node error and inclination

      ss_node = ss_node + ss_node_rate*time_step
      node = node + node_rate*time_step

      node_error = node - ss_node

      incl = incl + incl_rate*time_step

      time = time + time_step

      incl_rate_dpy = incl_rate*365.25d0

      write( 6,100)time,node_rate,incl_rate_dpy,node_error,incl, hour
      write(12,100)time,node_rate,incl_rate_dpy,node_error,incl, hour
00    format(3x,f6.1,3x,f8.6,3x,f9.6,3x,f10.6,3x,f9.6,3x,f10.6)

      end do

      close(12)

      stop
      end
```