S 127

CONTRACT NAS5–32500

Earth Observing System

EOS–AM SPACECRAFT PDR DATA PACKAGE

Package 4

Volume II of III

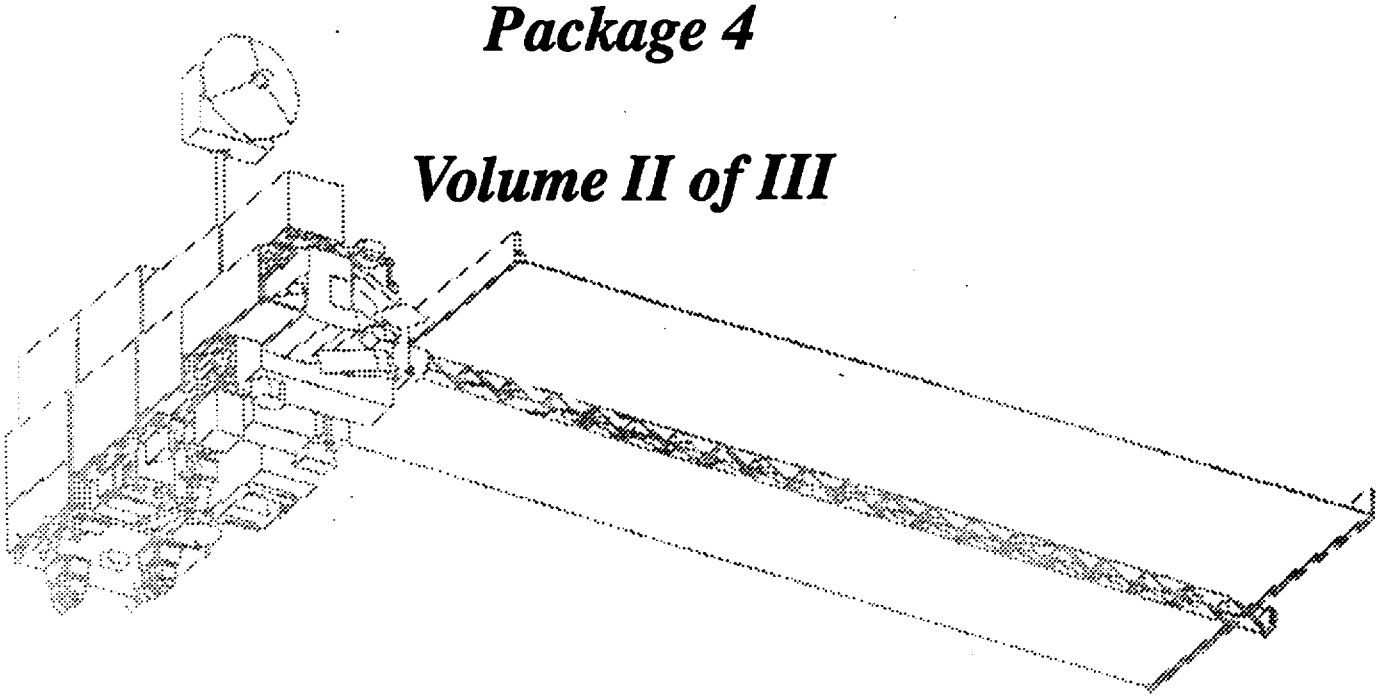

6 August 1993

MD-121: EOS-AM SPACECRAFT PDR DATA PACKAGE

DR/DN	TYPE	TITLE	REV	DOCUMENT	DATE
PACKAGE NO. 1				30 APRIL 1993	
SEP-101	1	Contract End Item (CEI) Specification for the EOS-AM Spacecraft	-	PS20005396	4/15/93
ICD-103	1	EOS-AM Spacecraft to Launch Vehicle Interface Reqrmnts Document	Prelim	IS20008503	4/30/93
ICD-104	1	Radio Frequency ICD Between EOS-AM S/C and STDN	-	IS20008504	3/31/93
PACKAGE NO. 2				8 JULY 1993	
EOS-DN	-	Baseline Description Document (BDD) for the EOS-AM S/C (Preliminary)	I	SE&I-010	6/10/93
EOS-DN	-	System Operating Modes	B	SE&I-001	5/21/93
SP-301	2	Performance Spec. Command & Data Handling S/S for EOS-AM S/C	-	PS20008567	6/28/93
SP-401	2	Performance Spec. Communications S/S for EOS-AM S/C	-	PS20008580	6/30/93
SP-501	2	Performance Spec. Electrical Power S/S for EOS-AM S/C	-	PS20004749	6/28/93
SP-741	2	Performance Spec. Electrical Accommodations S/S for EOS-AM S/C	-	PS20008636	7/6/93
SP-861	2	Critical Item Devlpmt. Spec. High Gain Antenna Assembly for EOS-AM S/C	-	PS20008513	10/16/92
SP-871	2	Critical Item Devlpmt. Spec. Solar Array Assembly for EOS-AM S/C	-	PS20008514	5/7/93
SEP-106	2	Electromaagnetic Compatibility (EMC) Control Plan for EOS-AMS/C	A	PN20005869	6/28/93
ICD-106	1	Interface Control Document (ICD) Data Format Control Book for EOS-AM S/C	Prelim	IS20008658	6/8/93
SD-110	2	EOS-AM S/C Flight Software System Requirements Specification	-	20008662	5/6/93
VRD-100	2	Verification Plan for the EOS-AM S/C	-	PN20005404	5/5/93

MD-121: EOS-AM SPACECRAFT PDR DATA PACKAGE (CONT.)

DR/DN	TYPE	TITLE	REV	DOCUMENT	DATE
Package No. 3				**22 JULY 1993**	
SP-101	2	Performance Spec. Structures & Mechanism S/S for EOS-AM S/C	-	PS20001415	7/16/93
SP-201	2	Performance Spec. Thermal Control S/S for EOS-AM S/C	-	PS20008549	7/20/93
SP-601	2	Performance Spec. Guidance, Navigation & Control S/S for EOS-AM S/C	-	PS20004937	7/21/93
EOS-DN	-	Housekeeping EM Layout Drawings	A	CNF-017	6/18/93
EOS-DN	-	Launch/On-orbit Deployed Configuration Layout	A	CNF-018	7/8/93
EOS-DN	-	Primary Structure Layouts	-	CNF-019	6/18/93
EOS-DN	-	Propulsion Module Layouts	-	CNF-020	7/7/93
EOS-DN	-	Flight Operations Management Plan	-	FO-001	6/30/93
Package No. 4				**6 August, 1993**	
VOLUME 1					
ICD-101	1	General Interface Spec. (GIS) for EOS-AM S/C	A	IS20008501	7/30/93
SP-701	2	Performance Spec. Propulsion S/S for EOS-AM S/C	-	PS20008617	8/5/93
SP-702	2	Performance Spec. Propulsion Module for EOS-AM S/C	-	PS20008618	7/30/93
SP-801	2	Performance Spec. GN&C Sensor Equipment Module for EOS-AM S/C	-	PS20001407	7/30/93
SP-801	2	Performance Spec. RWA Equipment Module for EOS-AM S/C	-	PS20001409	7/30/93
SP-801	2	Performance Spec. Power Equip. Module & Battery Panel for EOS-AM S/C	-	PS20001408	8/4/93
SP-801	2	Performance Spec. Recorder Equipment Module for EOS-AM S/C	-	PS20001411	7/30/93
SP-801	2	Performance Spec. C&DH/COMM Equipment Module for EOS-AM S/C	-	PS20008745	7/30/93

DR/DN	TYPE	TITLE	REV	DOCUMENT	DATE
Package No. 4 (Continued)					6 August, 1993
SP-801	2	Performance Spec. DAS Panel for EOS-AM S/C	-	PS20008571	7/30/93
EOS-DN	-	Equip. Module & Installation Top Level Signal Flow Diagrams	A	EAS-007	7/23/93
EOS-DN	-	Propellant Budget for EOS-AM S/C	-	RES-023	7/23/93
VOLUME II					
VRD-105	2	Spacecraft & Subsystem Test Plan for EOS-AM S/C	Prelim	PN20008664	7/30/93
VRD-110	2	Verification Spec. for EOS-AM S/C	A	PS20005404	8/6/93
VRD-800	2	S/C Assembly Plan for EOS-AM S/C	Prelim	PN20005405	7/30/93
SEP-109	2	Energy Balance Model - User's Guide for EOS-AM S/C	-	20008707	*
SEP-120	3	Mass Properties Report for EOS-AM S/C	Prelim	20001390	7/30/93
EOS-DN	-	EOS-AM Spacecraft Thermal Directory	-	TCS-053	7/27/93
-	-	Ground Systems Requirements Database	Prelim	20043119	7/14/93
-	-	Miscellaneous Mechanical Drawings:			
	-	High Gain Antenna MICD	-	MICD20001418	
	-	Solar Array MICD	-	MICD20008514	
	-	Mechanical Layout Dwgs.-Secondary Structure & CPHTS Plumbing	-	-	
VOLUME III					
PA-500	2	Failure Modes, Effects & Critical Analysis (FMECA)	Prelim	20008657	7/30/93
PA-510	2	Critical Items List (CIL)	Prelim	20005652	7/30/93
PA-520	2	Reliability Assessment for EOS-Am S/C	Prelim	20008654	7/30/93
PA-560	3	Limited Life Test	Prelim	20008653	7/30/93
PA-600	2	Fabrication & Assembly Flow Plan	Prelim	20008647	7/30/93

NOTE * Proprietary Document, will be shipped under separate cover.

PN20008664
CAGE No. 49671
30 July 1993

(Preliminary) Spacecraft and Subsystem Test Plan for EOS–AM Spacecraft (VRD–105)

Prepared under:
Contract NAS5–32500
NASA Goddard Space Flight Center
Greenbelt, Maryland 20771

Prepared by:
Martin Marietta Corporation
Astro Space
P.O. Box 800
Princeton, New Jersey 08543–0800

DCC080293

(This page intentionally left blank.)

REVISION LOG

This log identifies those portions of this document which have been revised since the original issue. Revised portions of each page, for the current revision only, are identified by marginal striping.

Revision	Paragraph Number(s) Affected	Rev. Date	Approval
Preliminary		07/30/93	EK

(This page intentionally left blank.)

TABLE OF CONTENTS

SECTION / PARAGRAPH	TITLE	PAGE
1	GENERAL	1
1.1	Purpose	1
1.2	Scope	1
2	APPLICABLE DOCUMENTS	3
2.1	Government Documents	3
2.1.1	NASA Documents	3
2.1.2	Other NASA Documents	3
2.1.3	Military Documents	3
2.1.4	Other Government Documents	3
2.1.5	Standards	4
2.2	Non–government Documents	4
2.2.1	Martin Marietta Astro Space Documents	4
2.2.2	Major Assemblies	5
2.3	Test Procedures	6
2.3.1	Utility and Calibration Procedures	6
2.3.2	General Purpose Test Procedures	6
2.3.3	Spacecraft Test Procedures	6
2.3.4	Launch Site Unique Integration and Test Procedures	8
2.3.5	EM Test Procedures	8
2.3.6	Subsystem Test Procedures	9
3	INTEGRATION AND TEST PROGRAM OVERVIEW	11
3.1	Test Philosophy	11
3.1.1	Levels of Testing	11
3.1.2	Test Categories	11
3.2	I&T Overview	13
3.2.1	I&T Planning	13
3.2.2	Equipment Module Integration and Test	14
3.2.3	Spacecraft Bus Integration	16

TABLE OF CONTENTS (Continued)

SECTION / PARAGRAPH	TITLE	PAGE
3.2.3.1	Mechanical Integration	16
3.2.3.2	Electrical Integration	16
3.2.4	Instrument Integration	19
3.2.5	Spacecraft Test	20
3.2.6	Launch Site Activities	21
3.3	Integration and Test Schedule	23
4	ORGANIZATIONAL ROLES AND RESPONSIBILITIES	27
4.1	Integration and Test	27
4.1.1	I&T Manager	29
4.1.2	Test Personnel	29
4.1.2.1	Test Director	29
4.1.2.2	Test Controller	30
4.1.2.3	Test Conductor	30
4.1.2.4	Test Engineering	30
4.2	Test Support	31
4.2.1	Engineering	31
4.2.2	Manufacturing	32
4.2.3	Facilities	32
4.2.4	Quality Assurance/Product Assurance	32
4.2.5	Contamination Control Engineering	32
4.2.6	EOS–AM Safety Engineering	33
4.2.7	Environmental Health and Safety	33
4.2.8	NASA–GSFC	33
5	TEST DOCUMENTATION	35
5.1	Test Procedures	35
5.1.1	Test Procedure Generation	35
5.1.2	Test Procedure Software	38
5.1.3	Approval Prior to Use	38
5.1.4	Procedure Changes	38

TABLE OF CONTENTS (Continued)

SECTION / PARAGRAPH	TITLE	PAGE
5.1.5	Special Test Procedures	39
5.2	Logbooks	39
5.2.1	Test Operations Logbook	39
5.2.2	Mechanical Operations Logbook	39
5.2.3	Ground Station Logbook	39
5.2.4	Instrumentor's Logbook	39
5.2.5	Problem Report Logbook	39
5.2.6	Mate/Demate Logbook	40
5.3	Test Reports	40
5.3.1	Daily Test Reports	40
5.3.2	System Test Report	40
5.4	Non–conformance Reports	40
5.5	Test Database	41
5.5.1	C&T Database	41
5.5.2	Data Displays	41
5.5.3	Memory Loads	41
5.6	I&T Library	41
6	OPERATIONS	43
6.1	Test Operations	43
6.1.1	Test Readiness	43
6.1.2	Test Discipline	44
6.1.3	Test Coordination	45
6.1.4	Test Performance	45
6.1.5	Instrument Operations	46
6.1.6	Data Evaluation	46
6.1.6.1	Real Time Evaluation	47
6.1.6.2	Post–Test Analyses – General	47
6.1.6.3	Trend Data	47
6.1.7	Test Abort Criteria	48

TABLE OF CONTENTS (Continued)

SECTION / PARAGRAPH	TITLE	PAGE
6.1.8	Anomaly Resolution	48
6.1.9	Unscheduled Activities	50
6.2	General Operations	50
6.2.1	Contamination Control	50
6.2.2	Clean Room Practices	51
6.2.3	Mating and Demating of Connectors	51
6.2.4	Test Tees and Breakout Boxes	52
6.2.5	Connection of External Leads to Spacecraft	52
6.2.6	Grounding Restraints	53
6.2.7	Electrostatic Discharge Precautions	53
6.2.8	Training	53
6.2.9	Safety	54
6.2.9.1	Safety of Personnel	54
6.2.9.2	Product Safety	54
6.2.10	Configuration Control	55
6.2.10.1	Test Procedures and Integration Procedure and Records	55
6.2.10.2	Test Database and CSTOL Procedures	56
7	TEST SUPPORT REQUIREMENTS	57
7.1	Support Equipment	57
7.1.1	Electrical Ground Support Equipment	57
7.1.1.1	Spacecraft Interface Simulator	57
7.1.1.2	Equipment Module Special Test Equipment	57
7.1.1.3	Spacecraft Checkout Station	57
7.1.1.4	Test Coldplate Systems	60
7.1.1.5	CPHTS Ground Cooling System	60
7.1.1.6	Launch Support Equipment	60
7.1.2	Mechanical Ground Support Equipment	60
7.1.3	Instrument Ground Support Equipment	63

TABLE OF CONTENTS (Continued)

SECTION / PARAGRAPH	TITLE	PAGE
7.2	Support Software	63
7.2.1	GSE Firmware	63
7.2.2	Test Software	64
7.3	Facilities	64
7.3.1	Shipping and Receiving Area	64
7.3.2	Bench Acceptance Test Control Room	64
7.3.3	Bench Acceptance Test Clean Room	66
7.3.4	35–foot Thermal Vacuum Chamber	67
7.3.5	Acoustic Chamber	67
7.3.6	Spacecraft Test Control Room	67
7.3.7	Bay 8 Mezzanine	67
7.3.8	Instrument Ground Station Area	68
7.3.9	Integration Bay 8	68
7.3.10	Calibration and Standards Laboratory	68
8	INSTRUMENT TESTING	71
8.1	Bench Acceptance Testing	71
8.2	Instrument–to–Spacecraft Electrical Integration	72
8.2.1	Thermal Interface Test	77
8.2.2	Instrument Performance Test	78
9	SUBSYSTEM TESTING	79
9.1	Overview	79
9.2	Functional Test	79
9.2.1	Purpose	79
9.2.2	Test Environment	79
9.2.3	Test Configuration	79
9.2.4	Test Description	79
9.2.5	Test Criteria	83
9.2.6	Test Prerequisites	83
9.2.7	Guidelines/Constraints	83

TABLE OF CONTENTS (Continued)

SECTION / PARAGRAPH	TITLE	PAGE
9.3	Comprehensive Performance Test	84
9.3.1	Purpose	84
9.3.2	Test Environment	84
9.3.2.1	Ambient	84
9.3.2.2	Thermal Vacuum	84
9.3.3	Test Configuration	84
9.3.3.1	Ambient	84
9.3.3.2	Thermal Vacuum	84
9.3.4	Test Description	85
9.3.5	Test Criteria	90
9.3.6	Test Prerequisites	90
9.3.7	Guidelines/Constraints	90
9.4	Aliveness Test	90
9.4.1	Purpose	90
9.4.2	Test Environment	90
9.4.3	Test Configuration	90
9.4.4	Test Description	90
9.4.5	Test Criteria	93
9.4.6	Test Prerequisites	94
9.4.7	Guidelines/Constraints	94
10	SYSTEM–LEVEL TESTING	95
10.1	Overview	95
10.2	Electrical System Testing	95
10.2.1	Flight Software Interface Verification	95
10.2.1.1	Purpose	95
10.2.1.2	Test Environment	96
10.2.1.3	Test Configuration	96
10.2.1.4	Test Description	96
10.2.1.5	Test Criteria	98

TABLE OF CONTENTS (Continued)

SECTION / PARAGRAPH	TITLE	PAGE
10.2.1.6	Test Pre–Requisites	98
10.2.1.7	Guidelines/Constraints	98
10.2.2	Power Profile (Conducted Emissions) Test	98
10.2.2.1	Purpose	98
10.2.2.2	Test Environment	98
10.2.2.3	Test Configuration	98
10.2.2.4	Test Description	98
10.2.2.5	Test Criteria	99
10.2.2.6	Test Pre–Requisites	99
10.2.2.7	Guidelines/Constraints	99
10.2.3	EMC (Transient Tolerance) Test	99
10.2.3.1	Purpose	99
10.2.3.2	Test Environment	99
10.2.3.3	Test Configuration	99
10.2.3.4	Test Description	100
10.2.3.5	Test Criteria	101
10.2.3.6	Test Pre–Requisites	101
10.2.3.7	Guidelines/Constraints	101
10.2.4	Orbital Mode Test	102
10.2.4.1	Purpose	102
10.2.4.2	Test Environment	102
10.2.4.3	Test Configuration	102
10.2.4.4	Test Description	102
10.2.4.5	Test Criteria	104
10.2.4.6	Test Pre–Requisites	104
10.2.4.7	Guidelines/Constraints	104
10.2.5	Spacecraft–to–Network Compatibility Tests	104
10.2.5.1	Purpose	104
10.2.5.2	Test Environment	104
10.2.5.3	Test Configuration	104

TABLE OF CONTENTS (Continued)

SECTION / PARAGRAPH	TITLE	PAGE
10.2.5.4	Test Description	104
10.2.5.5	Test Criteria	105
10.2.5.6	Test Pre–Requisites	105
10.2.5.7	Guidelines/Constraints	105
10.3	RF System Testing	105
10.3.1	EMC (Radiated Emissions) Test	105
10.3.1.1	Purpose	105
10.3.1.2	Test Environment	105
10.3.1.3	Test Configuration	105
10.3.1.4	Test Description	106
10.3.1.5	Test Criteria	106
10.3.1.6	Test Pre–Requisites	106
10.3.1.7	Guidelines/Constraints	106
10.3.2	RF Compatibility Test	106
10.3.2.1	Purpose	106
10.3.2.2	Test Environment	106
10.3.2.3	Test Configuration	107
10.3.2.4	Test Description	107
10.3.2.5	Test Criteria	108
10.3.2.6	Test Pre–Requisites	108
10.3.2.7	Guidelines/Constraints	108
10.4	Thermal Vacuum Testing	108
10.4.1	Trial Pump Down Test	110
10.4.1.1	Purpose	110
10.4.1.2	Test Environment	110
10.4.1.3	Test Configuration	110
10.4.1.4	Test Description	110
10.4.1.5	Test Criteria	111
10.4.1.6	Test Pre–Requisites	111
10.4.1.7	Guidelines/Constraints	111

TABLE OF CONTENTS (Continued)

SECTION / PARAGRAPH	TITLE	PAGE
10.4.2	Pre–pump Down Test	111
10.4.2.1	Purpose	111
10.4.2.2	Test Environment	111
10.4.2.3	Test Configuration	111
10.4.2.4	Test Description	111
10.4.2.5	Test Criteria	112
10.4.2.6	Test Pre–Requisites	112
10.4.2.7	Guidelines/Constraints	112
10.4.3	Launch Mode (Pump Down) Test	112
10.4.3.1	Purpose	112
10.4.3.2	Test Environment	112
10.4.3.3	Test Configuration	112
10.4.3.4	Test Description	112
10.4.3.5	Test Criteria	113
10.4.3.6	Test Pre–Requisites	113
10.4.3.7	Guidelines/Constraints	113
10.4.4	Bakeout	113
10.4.4.1	Purpose	113
10.4.4.2	Test Environment	113
10.4.4.3	Test Configuration	113
10.4.4.4	Test Description	113
10.4.4.5	Test Criteria	114
10.4.4.6	Test Pre–Requisites	114
10.4.4.7	Guidelines/Constraints	114
10.4.5	Thermal Balance Test	114
10.4.5.1	Purpose	114
10.4.5.2	Test Environment	114
10.4.5.3	Test Configuration	114
10.4.5.4	Test Description	115
10.4.5.5	Test Criteria	115

TABLE OF CONTENTS (Continued)

SECTION / PARAGRAPH	TITLE	PAGE
10.4.5.6	Test Pre–Requisites	115
10.4.5.7	Guidelines/Constraints	115
10.4.6	Vacuum (Thermal Cycling) Test	115
10.4.6.1	Purpose	115
10.4.6.2	Test Environment	116
10.4.6.3	Test Configuration	116
10.4.6.4	Test Description	116
10.4.6.5	Test Criteria	117
10.4.6.6	Test Pre–Requisites	117
10.4.6.7	Guidelines/Constraints	117
10.4.7	Post–ventback Test	117
10.4.7.1	Purpose	117
10.4.7.2	Test Environment	117
10.4.7.3	Test Configuration	118
10.4.7.4	Test Description	118
10.4.7.5	Test Criteria	118
10.4.7.6	Test Pre–Requisites	118
10.4.7.7	Guidelines/Constraints	118
10.5	Mechanical System Testing	118
10.5.1	Pre– and Post–mechanical System Alignment Test	118
10.5.1.1	Purpose	118
10.5.1.2	Test Environment	118
10.5.1.3	Test Configuration	119
10.5.1.4	Test Description	119
10.5.1.5	Test Criteria	119
10.5.1.6	Test Pre–Requisites	119
10.5.1.7	Guidelines/Constraints	119
10.5.2	Deployment Verification Test	119
10.5.2.1	Purpose	119
10.5.2.2	Test Environment	119

TABLE OF CONTENTS (Continued)

SECTION / PARAGRAPH	TITLE	PAGE
10.5.2.3	Test Configuration	119
10.5.2.4	Test Description	120
10.5.2.5	Test Criteria	120
10.5.2.6	Test Pre–Requisites	120
10.5.2.7	Guidelines/Constraints	120
10.5.3	Acoustic Test	120
10.5.3.1	Purpose	120
10.5.3.2	Test Environment	121
10.5.3.3	Test Configuration	121
10.5.3.4	Test Description	121
10.5.3.5	Test Criteria	121
10.5.3.6	Test Pre–Requisites	121
10.5.4	Shock Test	123
10.5.4.1	Purpose	123
10.5.4.2	Test Environment	123
10.5.4.3	Test Configuration	123
10.5.4.4	Test Description	123
10.5.4.5	Test Criteria	124
10.5.4.6	Test Pre–Requisites	124
10.5.4.7	Guidelines/Constraints	124
10.6	Post Environmental Testing	124
10.6.1	Leak Test	124
10.6.1.1	Purpose	124
10.6.1.2	Test Environment	124
10.6.1.3	Test Configuration	124
10.6.1.4	Test Description	124
10.6.1.5	Test Criteria	125
10.6.1.6	Test Pre–Requisites	125
10.6.1.7	Guidelines/Constraints	125
10.6.2	Trouble – Free Operations Test	125

TABLE OF CONTENTS (Continued)

SECTION / PARAGRAPH	TITLE	PAGE
10.6.2.1	Purpose	125
10.6.2.2	Test Environment	125
10.6.2.3	Test Configuration	125
10.6.2.4	Test Description	125
10.6.2.5	Test Criteria	126
10.6.2.6	Test Pre–Requisites	126
10.6.2.7	Guidelines/Constraints	126
10.6.3	End–to–end Compatibility Test	126
10.6.3.1	Purpose	126
10.6.3.2	Test Environment	126
10.6.3.3	Test Configuration	126
10.6.3.4	Test Description	126
10.6.3.5	Test Criteria	127
10.6.3.6	Test Pre–Requisites	127
10.6.3.7	Guidelines/Constraints	127
10.6.4	Mission Simulation Test	127
10.6.4.1	Purpose	127
10.6.4.2	Test Environment	127
10.6.4.3	Test Configuration	128
10.6.4.4	Test Description	128
10.6.4.5	Test Criteria	128
10.6.4.6	Test Pre–Requisites	128
10.6.4.7	Guidelines/Constraints	128
10.6.5	Mass Properties Test	128
10.6.5.1	Purpose	128
10.6.5.2	Test Environment	129
10.6.5.3	Test Configuration	129
10.6.5.4	Test Description	129
10.6.5.5	Test Criteria	129
10.6.5.6	Test Pre–Requisites	129

TABLE OF CONTENTS (Continued)

SECTION / PARAGRAPH	TITLE	PAGE
10.6.5.7	Guidelines/Constraints	129
11	LAUNCH SITE TESTING	131
11.1	Overview	131
11.2	Spacecraft Leak Check	131
11.2.1	Purpose	131
11.2.2	Test Environment	131
11.2.3	Test Configuration	131
11.2.4	Test Description	131
11.2.5	Test Criteria	131
11.2.6	Test Pre–Requisites	131
11.2.7	Guidelines/Constraints	132
11.3	Spacecraft Comprehensive Performance Test	132
11.3.1	Purpose	132
11.3.2	Test Environment	132
11.3.3	Test Configuration	132
11.3.4	Test Description	132
11.3.5	Test Criteria	132
11.3.6	Test Pre–Requisites	132
11.3.7	Guidelines/Constraints	133
11.4	Launch Pad Spacecraft Bus Aliveness Test	133
11.4.1	Purpose	133
11.4.2	Test Environment	133
11.4.3	Test Configuration	133
11.4.4	Test Description	133
11.4.5	Test Criteria	133
11.4.6	Test Pre–Requisites	133
11.5	Composite Electrical Readiness Test	133
11.5.1	Purpose	133
11.5.2	Test Environment	134

TABLE OF CONTENTS (Continued)

SECTION / PARAGRAPH	TITLE	PAGE
11.5.3	Test Configuration	134
11.5.4	Test Description	134
11.5.5	Test Criteria	134
11.5.6	Test Pre–Requisites	135
11.6	Launch Day Dress Rehearsal	135
11.6.1	Purpose	135
11.6.2	Test Environment	135
11.6.3	Test Configuration	135
11.6.4	Test Description	135
11.6.5	Test Criteria	136
11.6.6	Test Pre–Requisites	136
12	ACRONYMS AND ABBREVIATIONS	137

APPENDIX I

20	SPACECRAFT ELECTRICAL CONFIGURATIONS	145
20.1	Launch Mode	145
20.2	Science Mode	145
20.3	Noisy Mode	145
20.4	Quiet Mode	145

LIST OF FIGURES

FIGURE	TITLE	PAGE
1	Assembly and Test Planning Organization	2
2	Test Requirements Traceability	12
3	Typical Equipment Module Test Flow	15
4	Spacecraft Integration Flow	17
5	Spacecraft Test Flow	18
6	Launch Site Flow	22
7	EOS–AM I&T Schedule	24
8	I&T Operations Shift Plan	25
9	EOS I&T Team Structure	28
10	I&T Requirement/Document Flow (Sheet 1 of 2)	36
11	Astro Space Problem Report	49
12.	Spacecraft Electrical Ground Support Equipment (EGSE)	58
13	Spacecraft Checkout Station	59
14	EOS Integration and Test Facilities	65
15	Bench Acceptance Test Area Floor Plan	66
16	Integration Bay 8 Floor Plan	69
17	Open Circuit Interface Verification Test Configuration	74
18	Mated Circuit Interface Verification Test Configuration	76
19	Orbit Mode Test Timeline	103
20	Spacecraft Thermal–Vacuum Test Profile	109

LIST OF TABLES

TABLE	TITLE	PAGE
I	EOS Spacecraft MGSE	60
II	IVT Open Circuit Measurements	73
III	IVT Mated Circuit Measurements	75
IV	C&DH Functional Test Measurements	80
V	COMM Functional Test Measurements	80
VI	GN&C Subsystem Functional Test Measurements	81
VII	EPS Subsystem Functional Test Measurements	82
VIII	Propulsion Subsystem Functional Test Measurements	83
IX	Thermal Control Subsystem Functional Test Measurements	83
X	Electrical Accommodations Subsystem Functional Test Measurements	83
XI	C&DH Subsystem Comprehensive Performance Test Measurements	85
XII	COMM Subsystem Comprehensive Performance Test Measurements	85
XIII	GN&C Subsystem Comprehensive Test Measurements	86
XIV	EPS Subsystem Comprehensive Test Measurements	88
XV	Propulsion Subsystem Comprehensive Test Measurements	89
XVI.	Comprehensive Performance Test Measurements	89
XVII	Electrical Accommodations Subsystem Comprehensive Test Measurements	89
XVIII	C&DH Subsystem Aliveness Test Measurements	91
XIX	COMM Subsystem Aliveness Test Measurements	91
XX	GN&C Subsystem Aliveness Test Measurements	91
XXI	Aliveness Test Measurements	92
XXII	Propulsion Subsystem Aliveness Test Measurements	93
XXIII	Aliveness Test Measurements	93
XXIV	Electrical Accommodations Subsystem Aliveness Test Measurements	93
XXV	C&DH/FSW Interface Verification Test Measurements	96
XXVI	COMM/FSW Interface Verification Test Measurements	96
XXVII	GN&C/FSW Interface Verification Test Measurements	97
XXVIII	EPS/FSW Interface Verification Test Measurements	97
XXIX	TCS/FSW Interface Verification Test Measurements	97
XXX	ASTER/FSW Interface Verification Test Measurements	97

LIST OF TABLES (Continued)

TABLE	TITLE	PAGE
XXXI	CERES/FSW Interface Verification Test Measurements	97
XXXII	MISR/FSW Interface Verification Test Measurements	97
XXXIII	MODIS/FSW Interface Verification Test Measurements	97
XXXIV	MOPITT/FSW Interface Verification Test Measurements	98
XXXV	C&DH Transient Tolerance Test Measurements	100
XXXVI	COMM Transient Tolerance Test Measurements	100
XXXVII	GN&C Transient Tolerance Test Measurements	100
XXXVIII	EPS Transient Tolerance Test Measurements	100
XXXIX	Propulsion Transient Tolerance Test Measurements	101
XL	TCS Transient Tolerance Test Measurements	101
XLI	ASTER Transient Tolerance Test Measurements	101
XLII	CERES Transient Tolerance Test Measurements	101
XLIII	MISR Transient Tolerance Test Measurements	101
XLIV	MODIS Transient Tolerance Test Measurements	101
XLV	MOPITT Transient Tolerance Test Measurements	101
XLVI	RF Compatibility Test	107
XLVII	Qualification Acoustic Test Levels (TITAN–IV (NUS) and Atlas–IIAS)	122

TBD LOG

ITEM	SECTION	PAGE	SUBJECT	RESP.	DUE
TBD–1	2.3.4	8	I&T Launch Site Procedures	I&T	CDR
TBD–2	8.2	73	Intrument PWR/GND Isolation Criteria	I&T	CDR
TBD–3	9.3.2.2	84	Enviromental Test Temperature Limits	I&T	CDR
TBD–4	9.3.5	90	S/C and S/S Test Criteria	I&T	CDR + 6 months
TBD–5	9.3.6	90	S/C and S/S Test Pre–Requisites	I&T	CDR + 6 months
TBD–6	10.2.1.4	97	FSW IVT Test Requirements	I&T	CDR + 6 months
TBD–7	10.2.1.7	98	S/C and S/S Test Guidelines/ Constraints	I&T	CDR + 6 months
TBD–8	10.2.3.4	100	Transient Tolerance Test Requirements	I&T	CDR + 6 months
TBD–9	10.6.1.3	124	Leak Test Configuration	I&T	CDR + 6 months
TBD–10	20.1	145	Spacecraft Electrical Configurations	I&T	CDR + 6 months

TBR LOG

ITEM	SECTION	PAGE	SUBJECT	RESP.	DUE
TBR–1	10.6.4.4	128	Mission Simulation Test Duration	I&T	CDR + 6 months

(This page intentionally left blank.)

1 GENERAL

1.1 Purpose

This document describes the test plan for the EOS–AM spacecraft and its instruments and subsystems during spacecraft integration, qualification, and acceptance testing.

1.2 Scope

This plan specifically addresses instrument testing performed during integration onto the spacecraft bus, subsystem testing performed subsequent to Equipment Module (EM) electrical checkout during integration onto the spacecraft bus, spacecraft qualification testing, and launch site testing.

This plan focuses on organizational management, test philosophy, test operations, support requirements, facility requirements, and test descriptions. Requirements for this plan are established in the Verification Plan (PN20005404) and Verification Specification (PS20005404) documents for the EOS–AM Spacecraft. After concurrence by the participating organizations, this plan will serve as the baseline from which integration and test planning for the spacecraft can be developed.

Figure 1 illustrates the organization of assembly and test documentation for the component, major assembly, and spacecraft levels of assembly. The Comprehensive Test Plan comprises this plan, the Major Assembly Test Plans, and the Component Test Plans. The Major Assembly Test Plans define the test programs for the Equipment Modules (EMs), High Gain Antenna (HGA) assembly, and Solar Array (S/A) assembly. The Component Test Plans define the test programs for the individual components within the major assemblies. Details of the processes and philosophy associated with assembly of Major Assemblies and the mechanical integration of the Spacecraft is provided in the Assembly Plan for the EOS–AM Spacecraft (PS20005405). Component fabrication and assembly plans are defined in the manufacturing planning.

Within this document, "Major Assemblies" refers to equipment modules, the solar array assembly, the high gain deployment assembly, and the propulsion module. "Subsystem" will refer to the functional subdivisions of the spacecraft consisting of multiple functionally related components (command and data handling; guidance, navigation and control; communications; structures/mechanisms; electrical power; thermal control; and propulsion). Additionally, each instrument will be considered a subsystem. "Spacecraft Bus" refers to the fully integrated spacecraft minus the instruments. "Spacecraft" refers to the spacecraft bus and the complete instrument set.

Level of Assembly	Fabrication and Assembly Plans	Test Plans
		Comprehensive Test Plan
Component	**Component Manufacturing Planning** • Component Fabrication Definition • Component Assembly Definition	**Component Test Plans** • Component Test Definition – Functional – Performance – EMC – Shock – Strength – Vibration – Thermal Cycle – Mass Properties
Major Assembly	**Spacecraft Assembly Plan** • Integration Flow Definition – EMs – Propulsion Module – HGA • Assembly Definition – Panel Build-up – Module Integration	**Major Assembly Test Plans** • EM Test Definition – EIC – IVT – Functional – Performance (CPT) – Sine Vibration – Acoustic – Thermal Cycle – Mass Properties • HGA and Solar Array – Pre/post integration Testing
Spacecraft	• Integration Flow Definition – Spacecraft • Integration Definition – S/C Bus Equipment Installations – EM Installation – CPHTS Installation – Instrument Installations – Alignment – HGA & S/A Fit Check – Flight Adapter Fit Check – Thermal Blanket Installations – Environmental Test Preps – HGA & S/A Installations	**Spacecraft and Subsystem Test Plan** • Subsystem Test Definition – Subsystem Integration – Aliveness – Functional – Performance (CPT) • Spacecraft Test Definition – Subsystem Verification – Interface Verification – Alignment Verification – Aliveness – Functional – Performance – Compatibility – Thermal Vacuum – Acoustic – Pyro Shock – Deployments – Leak Test – End-to-End – Trouble Free Operation – Mass Properties – Launch Vehicle Interface – Launch Pad Aliveness – Launch Dress Rehearsal

Figure 1. Assembly and Test Planning Organization

2 APPLICABLE DOCUMENTS

2.1 Government Documents

The following documents of the exact issue shown, form a part of this plan to the extent specified herein. In the event of conflict between the documents referenced herein and the contents of this plan, the contents of this plan shall be considered as superseding.

2.1.1 NASA Documents

GSFC–420–03–02	General Instrument Interface Specification for the Earth Observing System
GSFC–420–05–02	Performance Assurance Requirements for EOS Observatories
GSFC–421–10–01	Requirements Document for the EOS–AM Spacecraft
GSFC–421–12–11–01	Unique Instrument Interface Document for the Advanced Spaceborne Thermal Emission and Reflection Radiometer (ASTER)
GSFC–421–12–04–01	Unique Instrument Interface Document for the Moderate–Resolution Imaging Spectro Radiometer (MODIS)
GSFC–421–12–12–02	Unique Instrument Interface Document for the Clouds and the Earth's Radiant Energy System (CERES)
GSFC–421–12–03–02	Unique Instrument Interface Document for the Multi–angle Imaging Spectro Radiometer (MISR)
GSFC–421–12–15–02	Unique Instrument Interface Document for the Measurement of Pollution in the Troposphere (MOPITT)

2.1.2 Other NASA Documents

GEVS–SE 1/90	General Environmental Verification for STS and ELV Payloads, Subsystems, and Components

2.1.3 Military Documents

MIL–STD–1522A	Standard General Requirements for Safe Design and Operation of Pressurized Missile and Space Systems

2.1.4 Other Government Documents

WSMCR 127–1 12/89	Western Space and Missile Center Range Safety Specification

2.1.5 Standards

FED–STD–209D	Clean Room and Work Station Requirements, Controlled Environment

2.2 Non–government Documents

The following documents of the latest issue shown form a part of this specification to the extent specified herein. In the event of conflict between the documents referenced herein and the contents of this specification, the contents of this specification shall be considered a superseding requirement, except for higher tier documents.

2.2.1 Martin Marietta Astro Space Documents

IS20008501	General Interface Specification for the Earth Observing System, (ICD–101)
IS20008503	Launch Vehicle Interface Requirements Document
PS20005396	EOS–AM Spacecraft Contract End Item Specification, (SEP–101)
PS20005397	Product Assurance Implementation Plan (PAIP)
PS20005404	Verification Specification for the Earth Observing System, (VRD–110)
PS20008536	EOS–AM Spacecraft Specification Tree
PS20008509	Spacecraft Checkout Station Requirements Document (SEP–900)
PS20008662	EOS–AM Spacecraft Flight Software System Requirements Specification
PN20005404	EOS–AM Spacecraft Verification Plan
PN20005868	Electromagnetic Compatibility Test Plan
PN20005869	Electromagnetic Compatibility (EMC) Control Plan, (SEP–106)
PN20008648	Program Approved Parts List (PAPL)
20008650	Program Approved Materials and Processes List
PN20005405	EOS–AM Assembly Plan (VRD–800)
PN20008522	Launch Site Plan (OP–510)

PN20008660	EOS–AM Alignment Plan (SEP–121)
PN20008659	EOS–AM Component Life Test Plan (SEP–113)
20001412	EOS–AM Contamination Control Plan (SEP–107)
20008698	Procedure for Control of Unscheduled Activities during Integration and Verification Testing (VRD–120)
20008816	ASTER I&T Interface Control Drawing
20008826	CERES I&T Interface Control Drawing
20008836	MISR I&T Interface Control Drawing
20008846	MODIS I&T Interface Control Drawing
20008856	MOPITT I&T Interface Control Drawing
Source:	Martin Marietta Astro Space P. O. Box 800 Princeton, NJ 08543–0800

2.2.2 Major Assemblies

PN2008513	Test Plan High Gain Antenna (Preliminary)
PN20008745	Test Plan C&DH/Communications Equipment Module (Preliminary)
PN20008571	Test Plan Direct Access Panel (Preliminary)
PN20008616	Structural Verification Test Plan EOS–AM Spacecraft
PN20008702	Verification Test Plan High Gain Antenna (Preliminary)
PN20001408	Test Plan for the Power EM & Battery Panels (Preliminary)
PN20003824	Reaction Wheel Assembly Test Plan
PN20001407	Test Plan GN&C Equipment Module
PN20008618	Test Plan Propulsion Module
PN20001411	Test Plan Solid–State Recorder Equipment Module
PN20008601	Test Plan Solar Array Assembly
Source:	Martin Marietta Astro Space P. O. Box 800 Princeton, NJ 08543–0800

2.3 Test Procedures

2.3.1 Utility and Calibration Procedures

TP–PFT–20008500	Fixture Proof Test
TP–ERT–20008500	EGSE Readiness Test
TP–OST–20008500	Ordnance Device Simulation Self–Test
Source:	Martin Marietta Astro Space P. O. Box 800 Princeton, NJ 08543–0800

2.3.2 General Purpose Test Procedures

TP–CRT–20008500	Cable Routing and Tying
TP–IOF–20008500	Instrument Turn–Off
TP–ION–20008500	Instrument Turn–On
Source:	Martin Marietta Astro Space P. O. Box 800 Princeton, NJ 08543–0800

2.3.3 Spacecraft Test Procedures

IPR–SI–20008500	Spacecraft Integration Procedure
TP–ABD–20008500	Solar Array Blanket Partial Deployment
TP–AE–20008500	Acoustic, Electrical
TP–AHD–20008500	Solar Array Hinge Deployment
TP–AL–20008500	Alignment, Optical
TP–AM–20008500	Acoustic, Mechanical
TP–AT–20008500	Aliveness Test
IPR–SI–20008500	Spacecraft Integration Procedure
TP–ABD–20008500	Solar Array Blanket Partial Deployment
TP–AE–20008500	Acoustic, Electrical
TP–AHD–20008500	Solar Array Hinge Deployment

TP–AL–20008500	Alignment, Optical
TP–AM–20008500	Acoustic, Mechanical
TP–AT–20008500	Aliveness Test
TP–CHG–20008500	Battery Charge Procedure
TP–CLN–20008500	Cleaning, Inspection
TP–CPTE–20008500	Comprehensive Performance Test, Electrical
TP–EAV–20008500	ESA Detector Aliveness Test
TP–EIC–20008500	Electrical Interface Checkout
TP–EMI–20008500	EMI/EMC
TP–ETE–20008500	Spacecraft End to End
TP–FTE–20008500	Functional Test, Electrical
TP–HBD–20008601G1	HGA Boom Deployment
TP–IVT–20008500	Electrical Interface Verification Test
TP–LM–20008500	Launch Mode
TP–LK–20008500	Leak
TP–LR–20008500	Launch Readiness
TP–MH–20008500	Mechanical Handling
TP–MP–20008500	Mass Properties–Balance/Ballast & Inertia
TP–MVS–20008500	Solar Array Drive Mechanical Verification
TP–ORB–20008500	Orbit Test
TP–ORD–20008500	Pyrotechnic Arming & Checks
TP–PP–20008500	Power Profile
TP–RF–20008500	RF Compatibility
TP–SCT–20008500	Launch Stored Command Table Test
TP–SHK–20008500	Pyro Shock
TP–SHP–20008500	Shipment, Receiving, Inspection
TP–SOF–20008500	Spacecraft Turn Off

TP–SON–20008500	Spacecraft Turn On
TP–SSC–20008500	Safe State Check
TP–SSHP–20008500	Spacecraft Ship Configuration Turn Off
TP–TBT–20008500	Thermal Balance Testing
TP–TCE–20008500	Thermal Cycle, Electrical
TP–TCM–20008500	Thermal Cycle, Mechanical
TP–TGT–20008500	Thermal Vacuum Target Operation
TP–TT–20008500	Transient Tolerance
TP–TV–20008500	Thermal Vacuum Program
TP–TVC–20008500	Thermal Vacuum Chamber Operation (35')
TP–UMB–20008500	Umbilical Pull Test at WTR
Source:	Martin Marietta Astro Space P. O. Box 800 Princeton, NJ 08543–0800

2.3.4 Launch Site Unique Integration and Test Procedures

(TBD–1)

2.3.5 EM Test Procedures

TP–EIC–20001409G1	RWA Electrical Interface C/O
TP–EIC–20001407	Sensor Electrical Interface C/O
TP–EIC–20008571	DAS Electrical Interface C/O
TP–EIC–20001408G1	Power Electrical Interface C/O
TP–EIC–20008703G1	Propulsion Electrical Interface C/O
TP–EIC–20008746G1	Battery Electrical Interface C/O
TP–EIC–20001411G1	Recorder Electrical Interface C/O
TP–EIC–20008745G1	C&DH/COMM Electrical Interface C/O
TP–EIC–20008601G1	Solar Array Assy Electrical Interface C/O
TP–EIC–20008572G1	HGAA Electrical Interface C/O

Source:	Martin Marietta Astro Space P. O. Box 800 Princeton, NJ 08543–0800

2.3.6 Subsystem Test Procedures

TP–FTE–20008567	C&DH S/S Functional Test, Electrical
TP–CPTE–20008567	C&DH S/S Comprehensive Performance Test (CPT), Electrical
TP–AT–20008567	C&DH S/S Aliveness Test
TP–FTE–20008580	COMM S/S Functional Test, Electrical
TP–CPTE–20008580	COMM S/S CPT, Electrical
TP–AT–20008580	COMM S/S Aliveness Test
TP–FTE–20008636	Electrical Accommodations System Functional Test, Electrical
TP–CPTE–20008636	EAS CPT, Electrical
TP–AT–20008636	EAS Aliveness Test
TP–IVT–20008545	EAS Interface Verification Test, PRA
TP–FTE–20004749	Electrical Power System (EPS) Functional Test, Electrical
TP–CPTE–20004749	EPS CPT, Electrical
TP–AT–20004749	EPS Aliveness Test
TP–FTE–20004937	GN&C S/S Functional Test, Electrical
TP–CPTE–20004937	GN&C S/S CPT, Electrical
TP–AT–20004937	GN&C S/S Aliveness Test
TP–FTE–20008617	Propulsion Module Functional Test, Electrical
TP–CPTE–20008617	Propulsion Module CPT, Electrical
TP–AT–20008617	Propulsion Module Aliveness Test
TP–LK–20008617	Propulsion Module Leak Test
TP–EIC–20008549	Thermal Control System (TCS) S/S Integration Test, Electrical

TP–MIC–20008549	TCS S/S Integration Test, Mechanical
TP–FTE–20008549	TCS S/S Functional Test, Electrical
TP–FTM–20008549	TCS S/S Functional Test, Mechanical
TP–CPTE–20008549	TCS S/S CPT, Electrical
TP–AT–20008549	TCS S/S Aliveness Test
Source:	Martin Marietta Astro Space P. O. Box 800 Princeton, NJ 08543–0800

3 INTEGRATION AND TEST PROGRAM OVERVIEW

3.1 Test Philosophy

3.1.1 Levels of Testing

The EOS–AM flight hardware test verification program incorporates test activities at the three major levels of assembly: Component, Equipment Module, and Spacecraft. Figure 2 illustrates the process in which test requirements are identified and flowed into the test plans and procedures for each level. Collectively, the test results from each level provide verification, to the extent possible by testing, that the flight hardware meets design and performance requirements.

The most extensive performance and environmental testing is performed at the component level. This is due mainly to the greater testability afforded by the direct access to box interfaces and test connectors. Performance is evaluated while exercising the component through its entire electrical and environmental test ranges. Component testing provides the earliest risk retirement. Detailed definition of component testing is described in the component test plans and procedures.

Equipment Module testing focuses primarily on the integration of the components within an EM and the functional verification of the fully assembled EM. Interface compatibility is verified throughout the build up of the EM. A series of open circuit and mated circuit electrical tests are performed, during the integration of each component, to verify each interface. After the EM is fully assembled, a performance test is performed to demonstrate functionality and self compatibility of the components within the EM. Detailed definition of EM testing is described in the EM test plans and procedures.

Spacecraft testing verifies the interface compatibility of the EMs and instruments, evaluates the functional performance of each of the spacecraft subsystems, demonstrates subsystem self–compatibility, and verifies spacecraft performance in simulated mission environments. This document pertains to spacecraft–level testing; component and EM testing will only be addressed as part of the integration and test program overview. Additional definition of spacecraft level testing is described in the spacecraft test procedures.

3.1.2 Test Categories

For each level of testing discussed in the previous section, the EOS–AM program will utilize four basic categories of tests: Aliveness, Functional, Performance, and System Characterization. The following paragraphs discuss each of these categories.

Aliveness testing will be used when a quick check of the state of the spacecraft or subsystems is required. This testing will consist of powering the subsystem into a standby mode in order to verify that it will receive and process commands and generate telemetry. The intent here is simply to determine that the subsystem is still operating and not to determine the quality of its operation. This type of testing may be used at such times as pre–test checks, after changes of spacecraft configuration or location, and prelaunch.

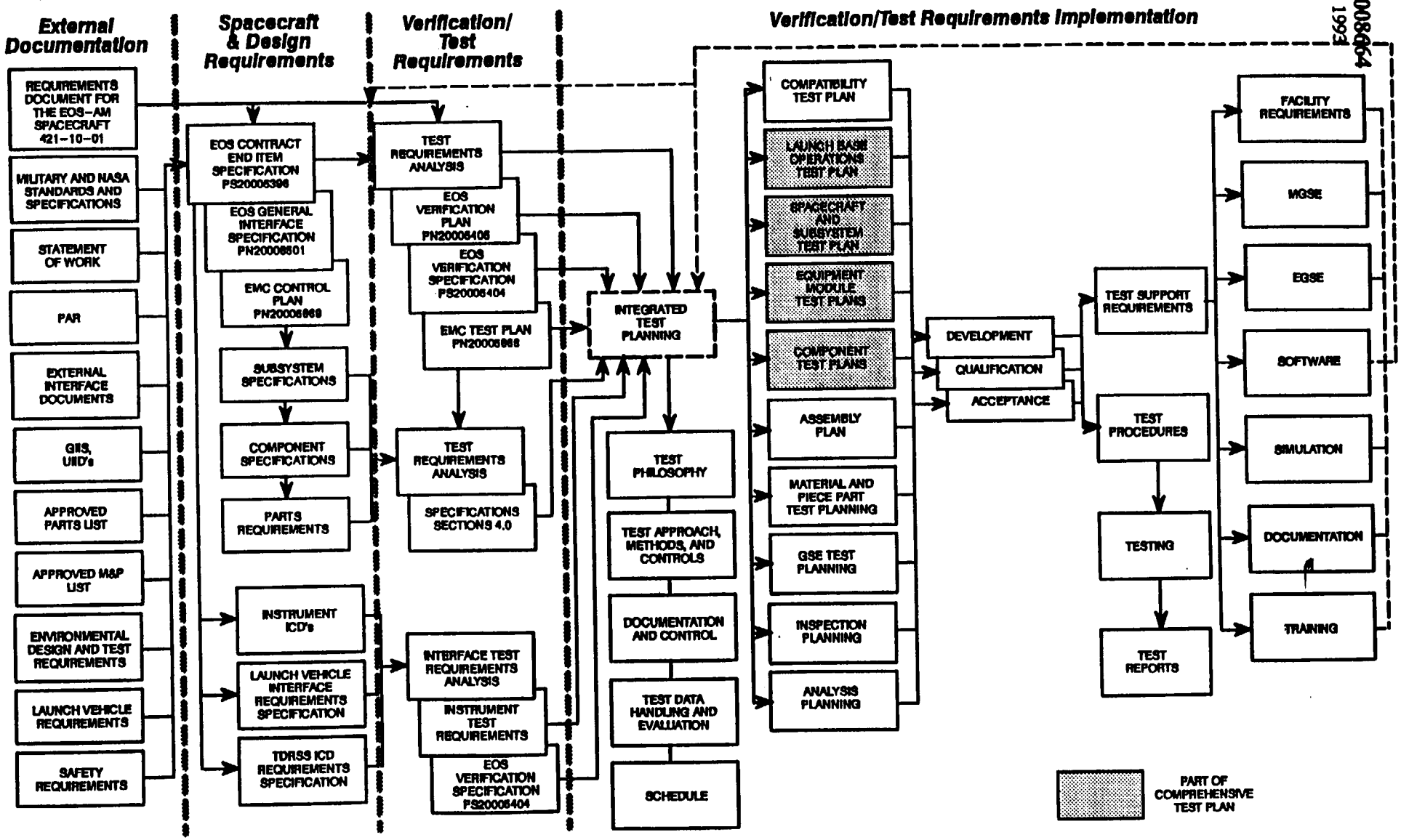

Figure 2. Test Requirements Traceability

Functional verification is the exercising of all command paths for the subsystem and verifying the proper electrical and mechanical response through telemetry. All command paths, configurations and operational modes of the subsystem will be operated, but not all combinations of these factors. The intent is to activate all mechanisms and internal configurations, including redundant H/W, within the subsystem, demonstrating that correct operation of the subsystem is achieved for that configuration. This type of testing is not used to assess the accuracy of the performance data and, therefore, will not include the use of external stimuli. Functional verification will be used following integration of the subsystem with the spacecraft and after selected environments.

Performance testing evaluates the end–to–end performance of the subsystem on the spacecraft and whether or not the subsystem meets its specified performance requirements. The subsystem is placed into its various operating modes and then the end–to–end performance of the subsystem is evaluated with the use of external and/or internal stimuli. This testing provides for determination of the subsystem's response to stimuli, and the stability of the subsystem output over time and environmental conditions. This testing will be performed several times throughout the I&T program to provide for a database of subsystem performance, over time, in order for performance trends to be evaluated. As a minimum, this testing will be performed after integration, prior to and immediately following environmental testing, during the spacecraft thermal vacuum testing, and prior to and immediately following shipment of the spacecraft to the launch site. This test may be performed on a stand–alone basis or in combination with other subsystems. For all subsystems, including instruments, this test should be traceable to testing performed at lower levels of assembly.

System Characterization is used to evaluate the response of the entire spacecraft to changes in subsystem configuration and the environment. It allows for evaluation of the repeatability and compatibility of spacecraft performance. For this type of testing, all of the subsystems will be in their normal operational modes (i.e., science mode, or as close to it as the ambient environment will allow) at the same time and the telemetry will be monitored, then compared to the baseline performance of each subsystem. This comparison will be used to evaluate the effect of each subsystem and its configurations on the performance of every other subsystem. This testing will be used to study the inter–subsystem compatibility of the spacecraft. System characterization testing will include transient tolerance, power profile, RF compatibility and simulated orbital operations testing.

3.2 I&T Overview

3.2.1 I&T Planning

Planning of I&T activities begins in the early phases of the spacecraft design process. The I&T organization is an integral member of the engineering product teams, which provide a systematic and concurrent approach to the design, manufacture, integration, and test of the EOS–AM hardware. I&T support of product teams and design reviews promotes incorporation of producibility and testability into the flight hardware designs. Development of test requirements, tests plans, and support equipment requirements, in the beginning phases of the program, is another significant benefit of the concurrent engineering effort.

Early involvement with the instrument providers is one of the primary focuses of the early I&T effort. Establishing a mutual understanding of the requirements for delivery of the instruments, integration to the spacecraft, and testing at the spacecraft level is essential for a timely, successful completion of these tasks. Instrument Accommodation colloquia will be held on a regular basis to develop these requirements. Development of the mechanical integration requirements will identify, among other things, alignment procedures, facility requirements, contamination control procedures, ground cooling requirements, and special constraints. Similarly, electrical requirement development will establish test philosophies and formats, EGSE and IGSE requirements, and any special test constraints.

Test planning is a large part of the pre–hardware I&T effort. The test requirements developed through the product teams and instrument accommodation colloquiums are the foundation for the test plans. Through the development of the test plans, facility and ground support equipment requirements are identified. The I&T organization is actively involved in the generation of the support equipment specifications to assure proper form, fit and function. Timely, accurate definition of support equipment requirements is critical as I&T procedures are dependent on them. Consequently, the I&T procedures are developed after support equipment definition.

3.2.2 Equipment Module Integration and Test

Equipment module integration and test will be performed by the I&T organization. EM I&T provides risk mitigation through parallel activities and interface verification prior to spacecraft integration. Additional benefits of the EM I&T approach is the validation of the C&T database and data displays, and the familiarization with EM hardware and test routines prior to spacecraft testing.

Figure 3 illustrates the typical equipment module assembly and test flow. Assembly and test of the EMs will be performed in parallel and independent of each other. Each EM will have a dedicated Equipment Module Special Test Equipment (EM STE) test station to perform all of its electrical testing. Each EM STE is an automated computer–based test set consisting of a SUN Workstation running OASIS. The command and telemetry (C&T) database and test modules utilized during EM I&T will be identical to those used during spacecraft I&T.

The assembly of the EMs will begin with installation of flight equipment onto the individual panels which make up a module. Electrical Integration and Checkout (EIC) is a series of tests that provides a safe orderly build–up and functional verification during integration of an equipment module. Powered and unpowered open circuit tests will be performed to verify a safe to mate condition before any mating occurs. When all of the equipment panels for a particular EM have been assembled, the electrical integration of the EM will begin. This consists primarily of mated circuit electrical measurements. The individual EM panels will be connected to each other with test harnesses if the flight harness does not allow this connection with the panels disassembled. A functional test will be performed with the panels electrically connected. After completion of the functional test, the EM panels will be assembled together to create the module assembly.

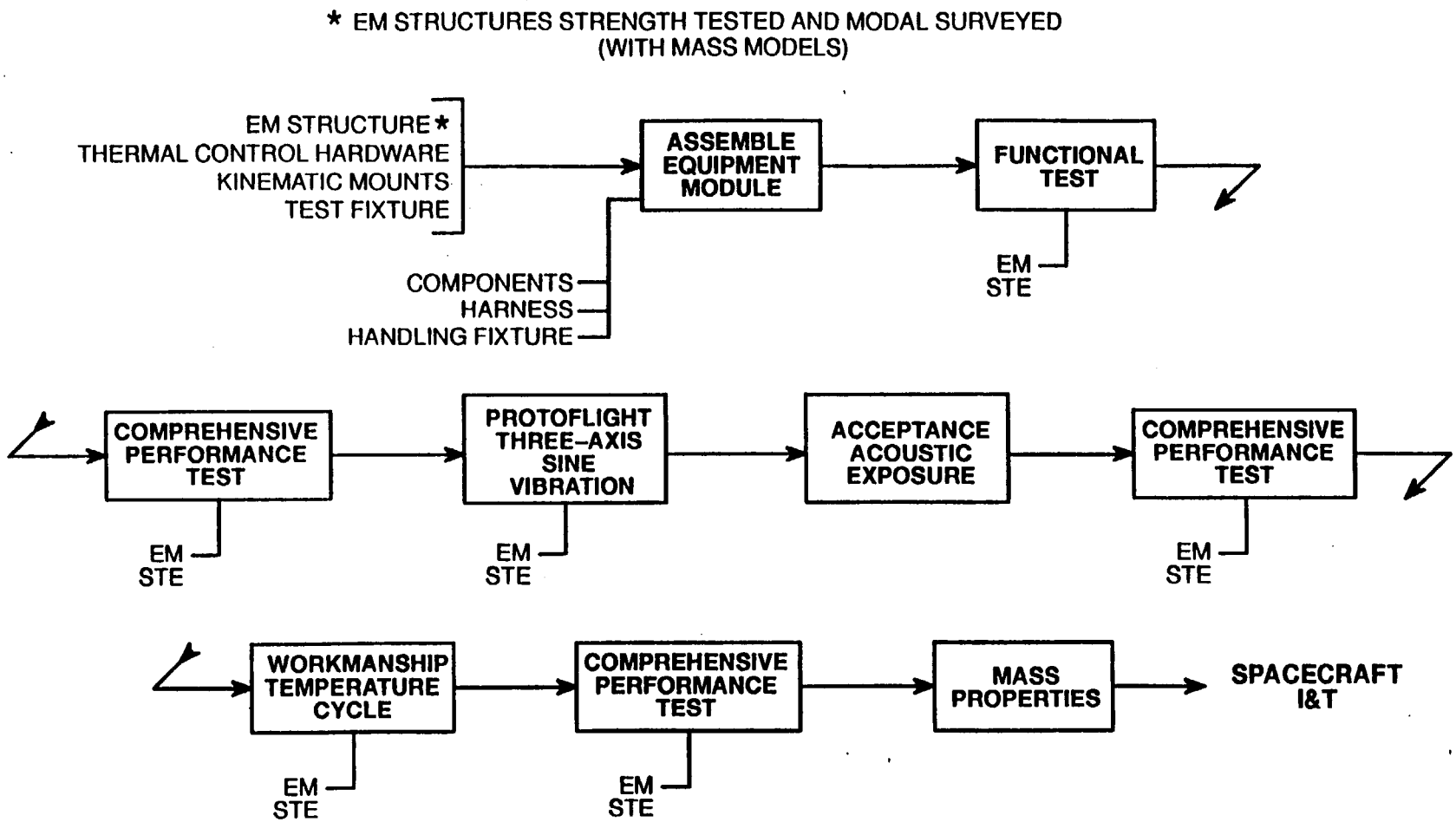

Figure 3. Typical Equipment Module Test Flow

Performance and environmental testing is performed with the EM in the fully assembled configuration. Performance tests will be performed before and after environmental testing. Environmental testing is performed to verify workmanship and consists of: three axis sine vibration, acoustic exposure, and thermal cycling (GNC EM testing will include thermal vacuum cycling). Mass properties measurements will be made just prior to spacecraft integration.

3.2.3 Spacecraft Bus Integration

3.2.3.1 Mechanical Integration

Integration of the Spacecraft will begin with the delivery of the core structure assembly to the I&T organization. The assembly of the Spacecraft is a multi–phased activity where groups of related hardware are integrated with the core structure assembly. This hardware consists mainly of the Electrical Accommodation Subsystem (harnesses), Propulsion Module, Solar Array Assembly, HGA boom and deployment equipment, Equipment Modules, Thermal Control Subsystem, and structure–mounted components. The Spacecraft integration flow is shown in Figure 4.

The first group of components to be integrated with the core structure are associated with the EAS. Following the assembly of the Electrical Accommodation Subsystem (EAS), internal Thermal Control Subsystem (TCS) and Structure and Mechanisms Subsystem (SMS) hardware on the core structure, the qualified Propulsion Module will be integrated. The equipment modules will be integrated to the Spacecraft next. As each equipment module is installed, any related structure–mounted components will also be installed and electrically integrated to simplify the electrical integration of each subsystem. Installation and checkout of the CPHTS assemblies will be performed next. The HGA assembly and the solar array assembly will be installed for a fit check to verify all mechanical and electrical interfaces and then will be removed. At this point, the instruments will be installed. This completes the assembly activities associated with the Spacecraft integration flow.

There are several mechanical integration activities which will take place as part of the Spacecraft test flow shown in Figure 5. The first activity will be the installation of MLI (thermal blankets) and other flight thermal control hardware prior to the Spacecraft thermal vacuum test. The HGA and solar array assemblies will be installed prior to the system acoustics test. The final mechanical assembly activity during the test flow will be the installation of flight batteries prior to the last Spacecraft comprehensive performance test and the shipment of the Spacecraft.

3.2.3.2 Electrical Integration

Spacecraft electrical integration is an iterative process in which individual major assemblies are electrically verified immediately following their mechanical integration to the spacecraft structure. The major assembly integration sequence provides for development of the critical bus resources necessary for the integration of the subsequent major assemblies. Electrical integration will verify performance of the spacecraft bus, including flight software, prior to instrument integration.

EIC will be performed immediately following mechanical integration of an EM. A series of open circuit tests will be performed to verify a safe to mate condition before mating the core harness to the EM. This is followed by a series of mated circuit electrical measurements. A functional test is

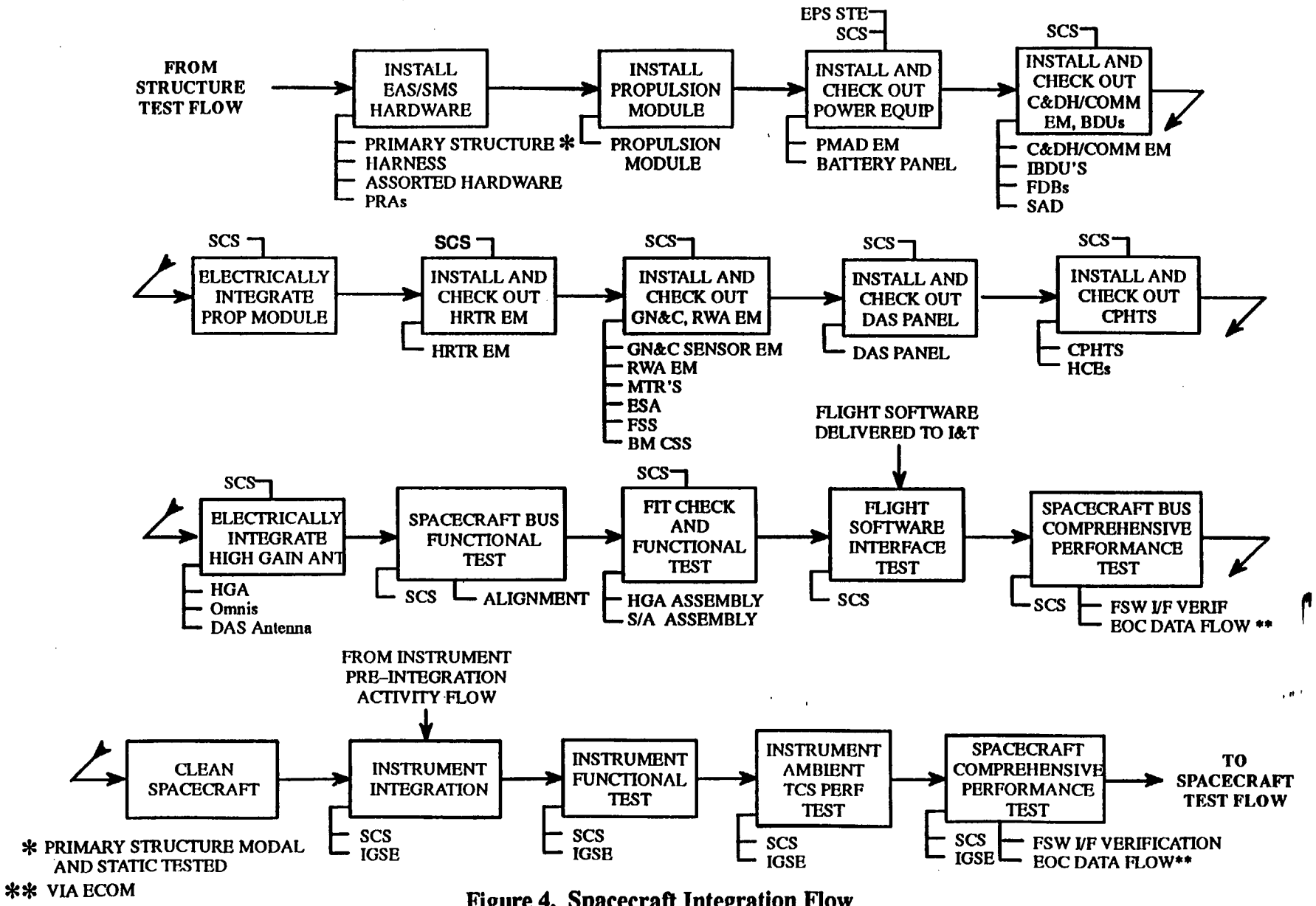

Figure 4. Spacecraft Integration Flow

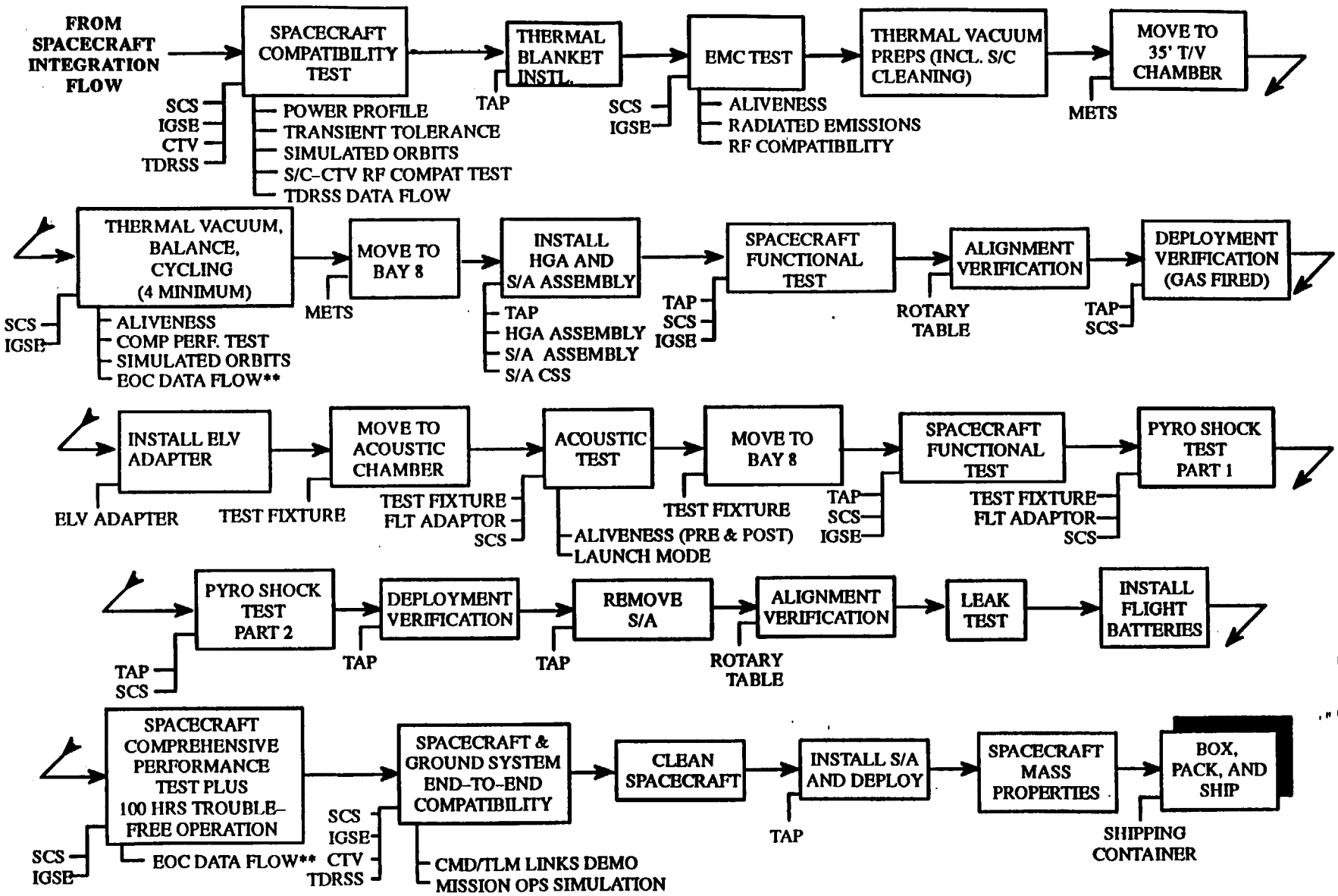

** VIA ECOM

Figure 5. Spacecraft Test Flow

then performed to demonstrate proper operation of the EM. The Power and C&DH/COMM EMs will be the first integrated to provide the necessary power, command, and telemetry functions required for integration of the remaining EMs. Figure 4 illustrates the sequence of EM integration as well as the other spacecraft integration activities. The Flight Software Interface Verification test will be performed after all the EMs have been integrated and verified. This test verifies flight software interfaces with the flight hardware. A Comprehensive Performance Test is performed as the final evaluation of the spacecraft bus prior to instrument integration.

Electrical testing during spacecraft integration is performed using the Spacecraft Checkout Station (SCS) (see Section 7.1.1.3). The SCS is an automated computer–based test set consisting of a SUN Workstation running Operations and Science Instrument Support Software (OASIS). Spacecraft level test procedures will utilize the same C&T database and test modules that were used during EM I&T. Testing during Spacecraft integration provides, in addition to increased confidence in the bus hardware, validation of the procedures and databases to be used during Spacecraft testing.

3.2.4 Instrument Integration

The instrument integration process is divided into three phases: pre–delivery, pre–integration, and integration. Each phase will be planned in detail through the Instrument Accommodation colloquia. These working group meetings will be attended by Martin Marietta Astro Space (Astro Space), GSFC, and the instrument providers. Detailed descriptions of these phases can be found in the Detailed Instrument–to–Spacecraft Integration Flow design note (EOS–DN–SE&I–039).

The pre–delivery activities focus primarily on the fabrication and delivery (to the instrument providers) of the following test support devices: instrument drill/alignment fixtures (DAFs), test coldplate drill template, test cold plate systems, test kinematic mounts, and test harnesses. Astro Space will fabricate and deliver to the IP a DAF. The IPs will transfer the mounting hole pattern from their DAF to their instrument. The DAFs will be utilized by Astro Space to drill the instrument mounting hole patterns into the spacecraft mounting structures. The test coldplate drill template will be used to transfer the coldplate mounting hole pattern to the instrument and coldplate assembly. Astro Space will deliver test coldplate systems to the ASTER and MOPITT IPs for thermal control purposes during pre–delivery and integration instrument testing. Test kinematic mounts will be delivered to the IPs for use during pre–delivery environmental testing. Flight–like test harnesses will be delivered to ASTER to create a flight–like configuration during pre–delivery testing.

Pre–integration activities include: receipt and inspection of the instrument and IGSE at the Astro Space, East Windsor facility, bench acceptance testing, and preparation for spacecraft integration. The receiving and inspection process officially records the arrival of the hardware at Astro Space and verifies that the instrument and IGSE were not visibly damaged during shipment. The BAT verifies the instrument is performing properly and is ready for integration. The BAT is performed by IP personnel in accordance with IP–approved procedures. Preparations for integration include any modifications to the instrument configuration that are required to prepare it for installation on the spacecraft.

All spacecraft accommodation equipment specific to an instrument will be installed prior to the mechanical integration of that instrument. Instrument integration will be performed by Astro Space personnel, with technical support supplied by the IP, per an approved Astro Space procedure. The spacecraft will be oriented horizontally with the +Z axis up. Following mechanical integration, the instrument will be aligned to the spacecraft as specified in the instrument Mechanical Interface Control Drawing (MICD).

Instrument integration is independent of order; however, electrical integration will immediately follow the mechanical integration of an instrument. Electrical integration consists of a series of tests that ensure compatibility of all electrical spacecraft–to–instrument interfaces and to demonstrate the proper operation of the instrument once it has been fully integrated. Electrical integration is performed in three steps. The first step is an open circuit verification to ensure a safe to mate condition. The second step is a mated circuit test to verify proper response to power and commands. The third step is a functional test to verify proper operation of all command, data, and power paths for both primary and redundant hardware and to verify CPHTS interfaces.

3.2.5 Spacecraft Test

Spacecraft testing demonstrates interface compatibility, verifies functional performance of subsystems and instruments, characterizes spacecraft self compatibility, demonstrates compatibility with ground and space networks, and evaluates spacecraft performance in simulated mission environments. Figure 5 illustrates the spacecraft test flow.

The spacecraft Comprehensive Performance Test (CPT) is a detailed verification that the spacecraft and subsystems meet performance requirements, in all operational and contingency modes, to the extent these requirements are testable. The CPT is repeated throughout I&T and will be the primary means by which the spacecraft's performance is trended during I&T. At a minimum, the CPT will be performed after instrument integration, during thermal vacuum testing, after environmental testing, just prior to shipment to the launch site, and at the launch site.

Compatibility testing includes self compatibility and spacecraft–to–network compatibility tests. Self compatibility is characterized through conducted emissions tests, radiated emissions and orbital simulation tests. Conducted emissions tests characterize the effects, on spacecraft performance, of power bus transients and component "noisy" modes. Radiated emissions tests measure worst case unintentional electromagnetic radiation emanating from the spacecraft. Orbit simulations demonstrate the ability of all spacecraft elements to operate in science mode during simulated mission orbits. Spacecraft–to–network compatibility tests, utilizing the Compatibility Test Van (CTV), verify RF compatibility between the EOS–AM spacecraft, space network, and ECOM/EOSDIS network.

Spacecraft–level environmental testing includes thermal vacuum, acoustic, and pyro shock environments. Thermal vacuum testing verifies the capability of the spacecraft to meet performance specifications while subjected to predicted nominal and worst case operating conditions. The solar array assembly and the HGA will not be installed during thermal vacuum testing, but they will be installed during acoustic and pyro shock testing. Further self compatibility characterization,

through orbital simulations, will occur during this test. Performance of the thermal control hardware and accuracy of analytical models will be evaluated during the thermal balance test which is performed as part of the thermal vacuum test.

The acoustic test exposes the spacecraft to an environment which is 3 dB higher than the predicted dynamic launch environment. With the spacecraft in the launch configuration, telemetry is monitored throughout the test for any unexpected occurrences. An aliveness test will be performed before and after the test to verify no degradation to the spacecraft has occurred.

Flight–like pyro assemblies will be installed and fired for pyro shock testing. Shock response will be recorded and telemetry monitored for unexpected occurrences during the firings. Solar Array and HGA deployments will be performed before and after environmental testing to verify no degradation of performance has occurred due to the induced environments. Alignment verification will also occur before and after environmental testing to characterize environmental effects.

After environmental testing and prior to shipping, flight battery installation, a pre–ship CPT, a continuous operations test, end–to–end test and final mass properties will be performed.

3.2.6 Launch Site Activities

Launch site activities include the transportation of the spacecraft to Vandenberg Air Force Base (VAFB), post–shipment processing, and final preparations and verification for launch. Figure 6 illustrates the launch site flow.

The spacecraft will be shipped to the VAFB launch facility in the modified Gamma Ray Observatory (GRO) shipping container. Upon arrival at the launch site, the spacecraft will be inspected and a propulsion system leak check will be performed.

Flight battery charging will commence following the leak check. After completion of battery charging, a CPT will be performed to verify the spacecraft survived the the cross–country transport. The test will be a repeat of the CPT performed during spacecraft I&T. The GSE equipment and spacecraft configuration will be the same as during spacecraft I&T.

After performance testing is completed, the spacecraft will undergo a final inspection and any mechanical closeouts that may be required will be performed (e.g., final arrangement of blankets, removal of red–tagged items, etc.). All non–flight items on the spacecraft will be red–tagged to ensure removal prior to launch. The batteries will be discharged prior to propellant loading. The propulsion module will then be serviced with propellant and the Spacecraft will be installed into the launch vehicle fairing. The encapsulated Spacecraft will then be transported to the Space Launch Complex –3 (SLC–3) facility and mated to the booster.

Battery charging will be performed following the mate to the launch vehicle. An aliveness test will be performed to validate the command and telemetry links and to verify no damage to the spacecraft occurred during the move to the pad. The composite electrical readiness test is then performed to verify the spacecraft and launch vehicle common interfaces and self compatibility between the two systems. A launch day dress rehearsal will be performed to demonstrate launch readiness of the flight vehicle system and launch support organizations. Final closeouts, performed on launch day, will include installation of battery enable plugs, removal of final red tag items, and arming of spacecraft ordnance.

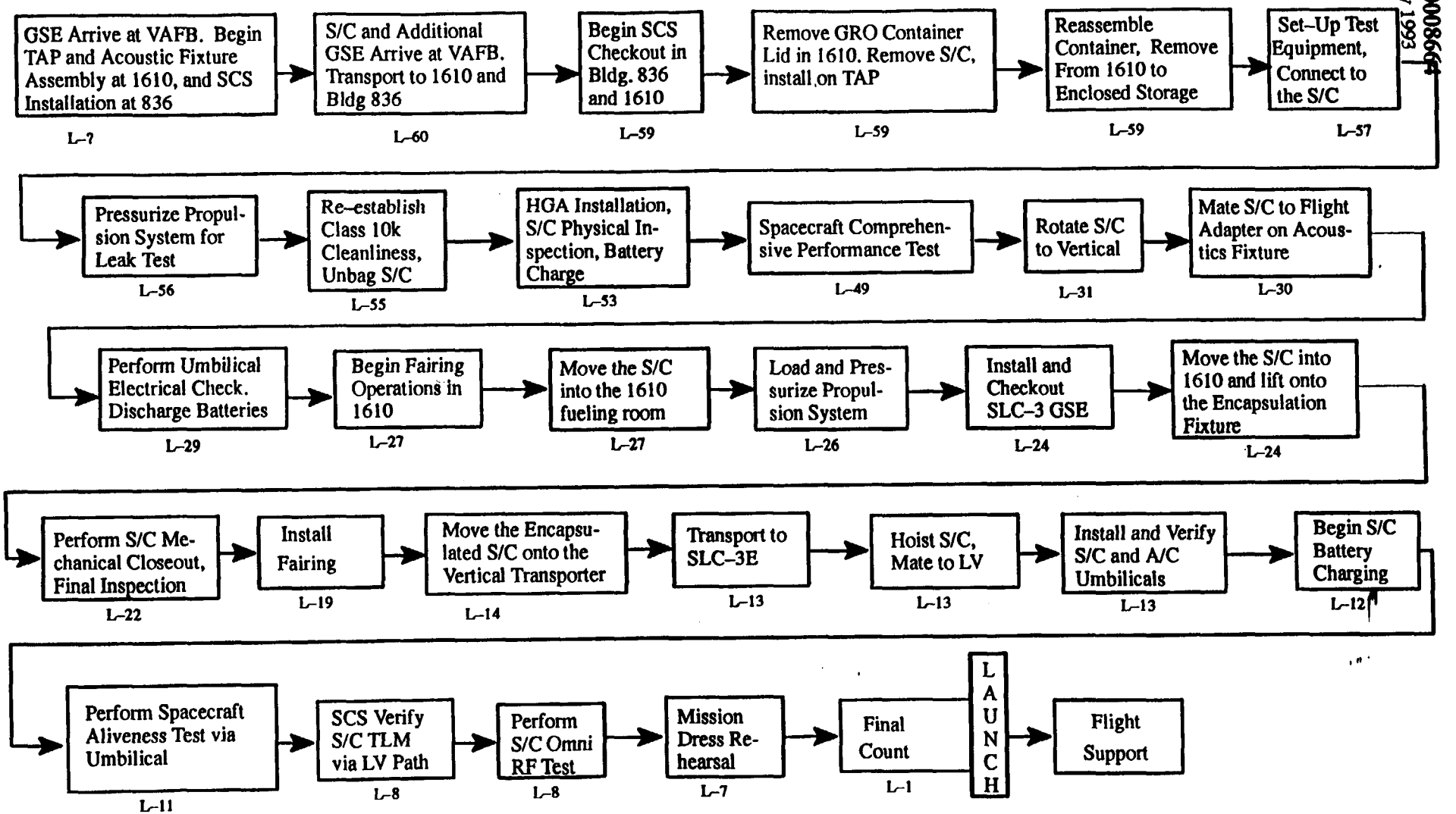

NOTE: "L-" days are calendar days prior to launch

Figure 6. Launch Site Flow

3.3 Integration and Test Schedule

Figure 7 is the schedule of the major EOS–AM I&T activities. The I&T schedule for EOS plans for two eight hour shifts per day, five days per week during ambient testing of the spacecraft, including instrument integration activities. The remaining time each week (nights and weekends) is reserved for contingency operations. During environmental testing (e.g., thermal/vacuum testing), the schedule will be three eight hour shifts per day, seven days per week. Figure 8 depicts the planned shift coverage for the EOS–AM spacecraft.

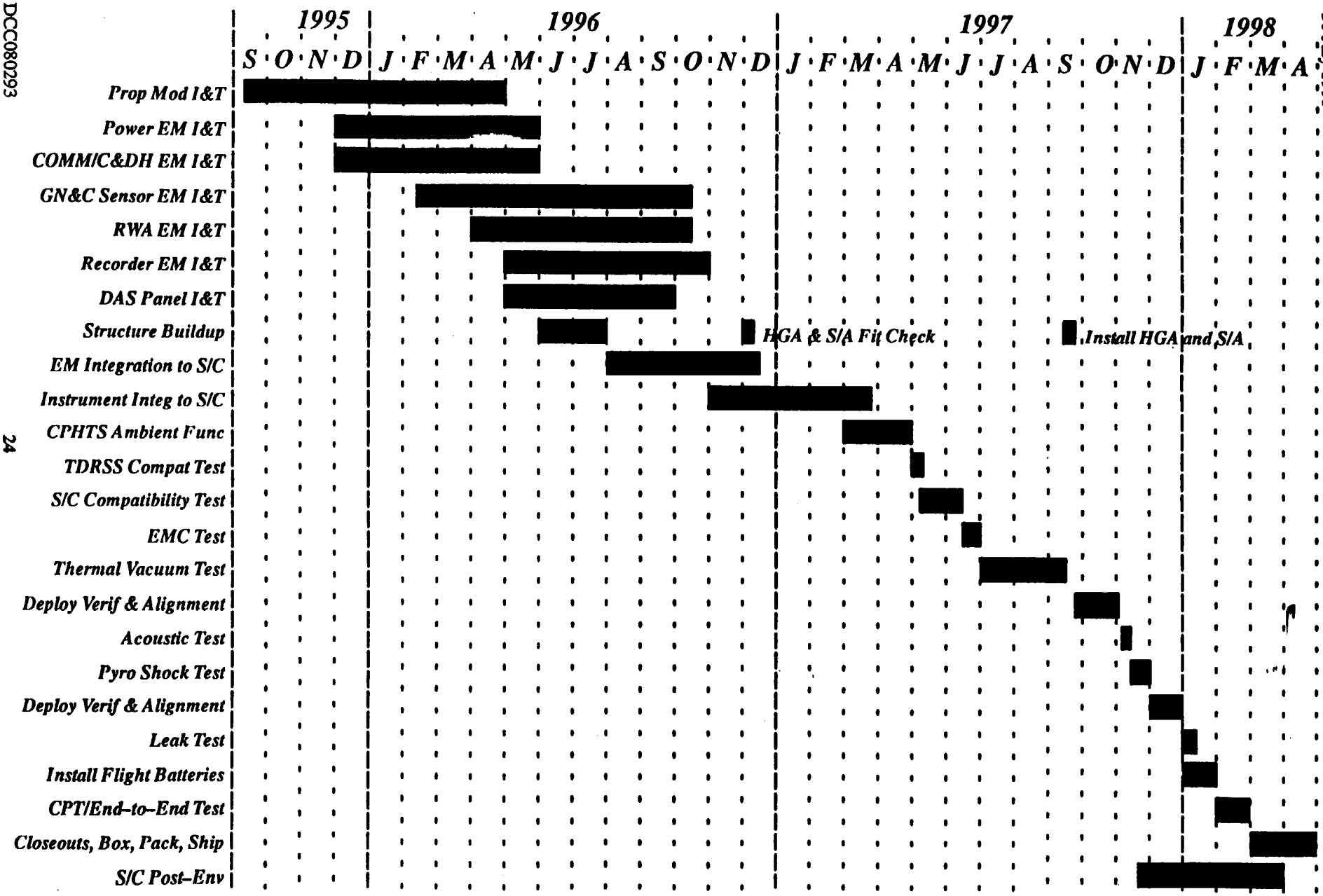

Figure 7. EOS–AM I&T Schedule

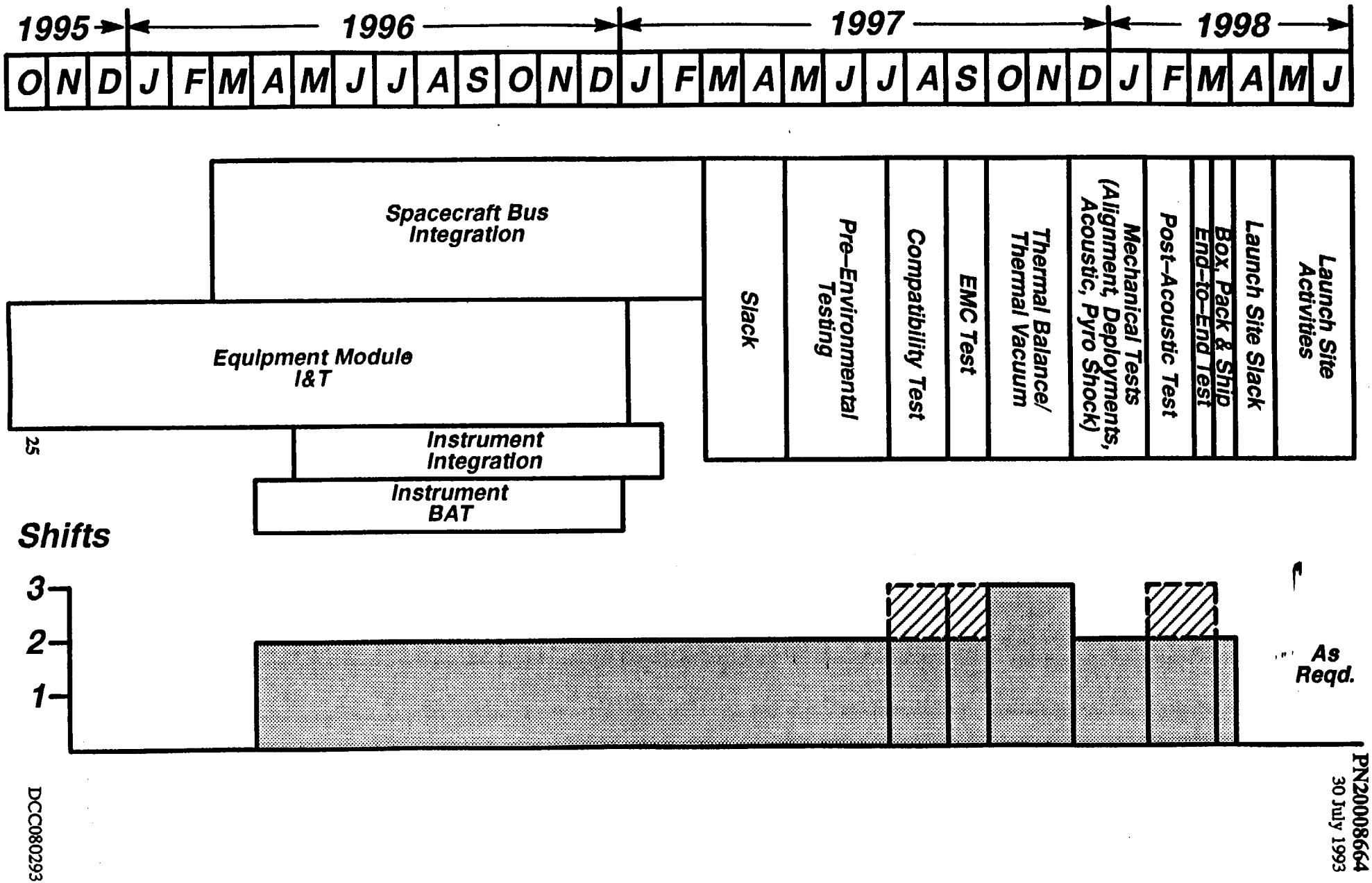

Figure 8. I&T Operations Shift Plan

DCC080293
PN20008664
30 July 1993

(This page intentionally left blank.)

4 ORGANIZATIONAL ROLES AND RESPONSIBILITIES

The following organizations will provide the defined support for the EOS–AM Equipment Module and Spacecraft Integration and Test.

Personnel levels and experience will include those required to accomplish and support: (1) product teams, (2) interface working groups, (3) GSE requirements definition, (4) contingency and test plan development, (5) integration and test procedure development, (6) manufacture and assembly operations, (7) I&T operations, and (8) special facility and simulation equipment operation.

Each individual working on the test activities of the program is required to understand and exercise safety related practices. Each individual is equally responsible, regardless of job classification, to make recommendations, immediately if necessary, to assure the continued safety of the test article. The personnel shall appraise themselves of the safety aspect of their assignments. Critical assignments such as pyro handlers, tug operators, spacecraft handlers, mate/demate personnel and MGSE operators, shall be specially trained and certified by the I&T Management and Quality Assurance, as appropriate.

4.1 Integration and Test

Astro Space EOS–AM I&T will provide the following:

a. Test direction and management

b. EM and spacecraft producibility and testability engineering support

c. Test and facilities planning

d. EM and Spacecraft Test Procedures development (and Test Directives) and updates

e. Test scheduling

f. EM and spacecraft assembly

g. Control and conduction for all EM and Spacecraft testing

h. Pre–test and post–test briefings. These briefings will be held prior to and after every significant test phase

i. Preparation and maintenance of appropriate logbooks

j. Daily test report generation and distribution

The EOS–AM I&T organization structure is shown in Figure 9.

Staffing of the I&T team provides that the I&T Manager and other key personnel are in place at the beginning of the development phase of the contract to perform the advance planning required for the I&T operation.

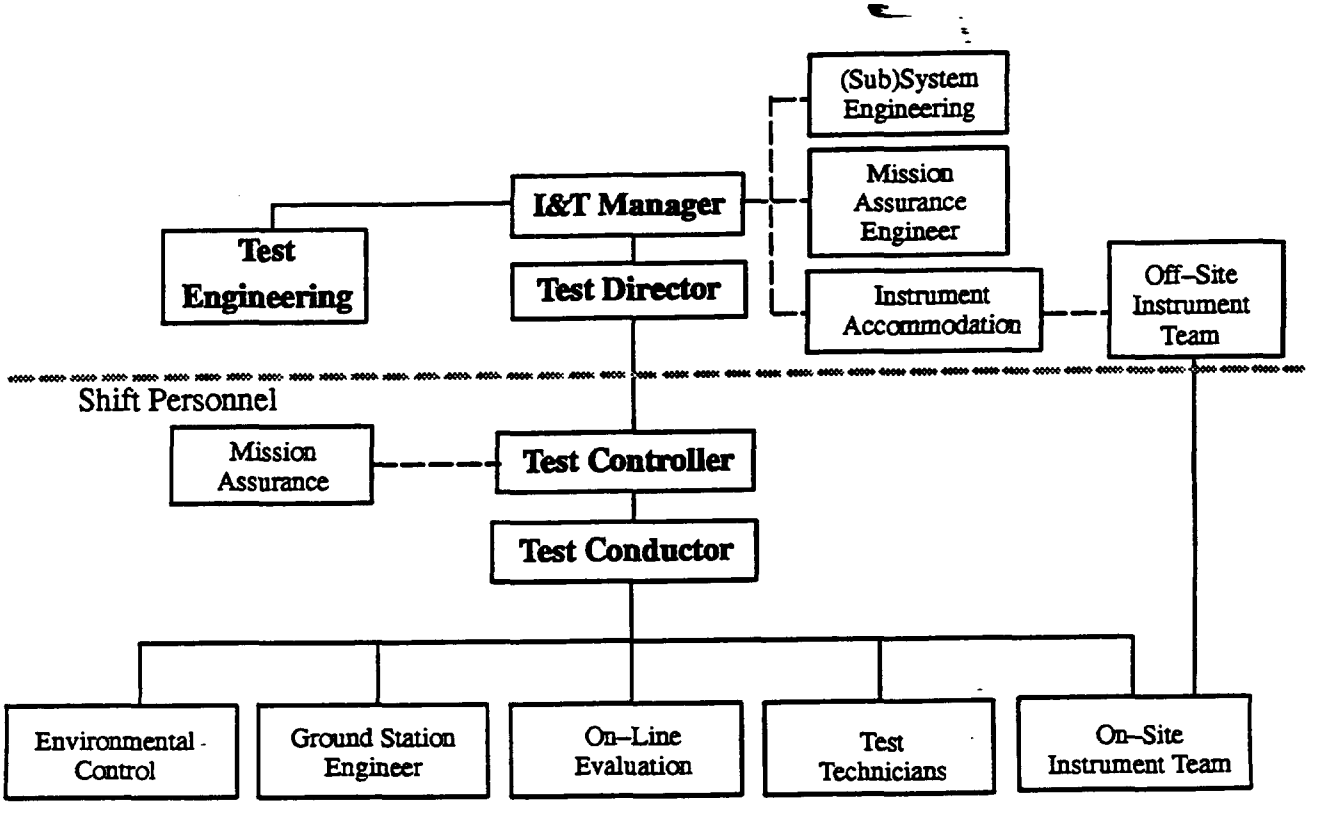

Figure 9. EOS I&T Team Structure

Following the definition of requirements for plans and procedures, the staff will be increased to address the development of these documents.

I&T staff involved with the early project planning maintains a close interface with the program office Systems and Equipment groups to ensure a thorough understanding of the EOS–AM components and subsystems. In addition, key I&T staff members maintain a tight interface with Instrument Accommodation and the IPs to facilitate the test information transfer required for the EOS–AM integration program.

Testing of the EOS–AM flight hardware is supported by key personnel involved with the initial plan and procedure development effort to provide continuity of thought and provide the most knowledgeable staff during this effort.

The following sections provide definitions of the organization responsibilities of the EOS–AM I&T team members.

4.1.1 I&T Manager

The EOS–AM Integration and Test Manager is responsible for the overall integration, test, storage, and launch activities related to the Equipment Panels and Modules and the Spacecraft. The I&T Manager reports directly to the EOS–AM Program Manager and is the primary information conduit to the deputy program manager–development.

In addition to the activities directly related to the spacecraft, the I&T manager is responsible for the I&T bay, all Ground Support Equipment (GSE), test equipment, and spacecraft documentation, including test plans, procedures reports and configuration logs. The I&T manager's primary roles and responsibilities are:

a. I&T program performance

b. Manpower planning

c. Facilities planning

d. Test program definition

e. Long range test planning

f. I&T operations management

4.1.2 Test Personnel

4.1.2.1 Test Director

The Test Director manages the administrative matters related to the coordination of the overall test effort. He is the primary interface with his management and support groups outside integration and test management. He reviews and approves all test procedures.

No alterations to the Program Plan, affecting test activities already in process, may be made without his cognizance and his contact with the test controller. The sole exception is where the Test Controller is required to make an on–line decision to protect hardware or personnel safety. The test director's primary roles and responsibilities are:

a. Test planning and scheduling

b. Facility planning

c. Manpower forecasting and scheduling

d. Test Readiness Reviews

e. Test coordination

f. Problem Report Board Chairman

g. Daily Test Report generation

4.1.2.2 Test Controller

The Test Controller is the shift leader in whom control of all aspects of the testing is vested. He assures that the test article and associated GSE is configured according to the requirements of that procedure and restraints established by ancillary documents. It is his responsibility to start, complete, and/or terminate all test activities and related support activities at his discretion. It is his responsibility to notify his functional and program management immediately of all matters related to hardware safety. He has a near full time presence in the test laboratory and has ultimate responsibility for spacecraft health and bay activities for a given shift. The test controller's primary roles and responsibilities are:

a. Shift leader

b. Test floor coordination

c. Test safety monitoring

d. Contamination control monitoring

e. Shift planning

f. Test documentation control

4.1.2.3 Test Conductor

The Test Conductor supervises the test personnel during the step–by–step execution of the test procedure. He stands in for the Test Controller when necessary and so must be aware of all safety responsibilities of that position. The Test Conductor's primary roles and responsibilities are:

a. Test supervision

b. Test configuration control

4.1.2.4 Test Engineering

Test Engineering is part of the I&T organization and reports to the I&T Manager. This group is formed around the CDR time frame and, initially, is responsible for developing Equipment Module test procedures from the EM test plans and with support from subsystem engineers. Test engineers rely heavily on subsystem engineers during EM I&T for technical support. From CDR through EM I&T, test engineers become knowledgeable about the hardware and then assume responsibility for that hardware during Spacecraft I&T. During Spacecraft I&T, subsystem engineers are expected to support test engineers as required.

Test engineers are responsible for specific subsystems. They have responsibility for developing all test procedures required for testing a given subsystem as well as data evaluation and generation of test reports. In preparation for EM I&T, they support subsystem engineers in the development of the I&T database and data displays. During EM I&T, they support subsystem engineers in troubleshooting and anomaly resolution. During Spacecraft I&T, they are responsible for troubleshooting and anomaly resolution for their subsystem. Test Engineering's primary roles and responsibilities are:

a. Spacecraft and subsystem test planning

b. Test procedure development

c. Test support

d. Data review

e. Anomaly resolution

f. C&T database development

4.2 Test Support

4.2.1 Engineering

Engineering provides the following support to I&T:

a. Provide the requirements for all tests

b. Review and approve all test procedures generated to assure that all test requirements are included

c. Participate in the resolution of anomalies that occur

d. Participate in pre–test and post–test briefing

e. Support test conduction

f. Generate the applicable Test Reports

g. Support off–line analysis

h. Analyze/Evaluate Test Results

i. Provide technical support for environmental exposure testing

j. Provide technical support for all subsystems (Power, Thermal, Communication, and Control) including instruments

k. Provide technical support for I&T Software maintenance

Instrument Accommodation Engineering provides the following support:

a. Assist IP

    1. Generate test requirements

    2. Technical direction and support for spacecraft instrument testing

    3. Lead instrument unique anomaly investigation and resolution

    4. Assist in data review

    5. Preparation of test reports

b. Focal point for coordination with the instrument team

c. Liaison with non–resident instrument team

d. Maintain spacecraft instrument database

4.2.2 Manufacturing

Manufacturing provides the following support:

a. Provide services for support of all hardware transfer to I&T.

b. Provide documentation logs for all components including such information as mate/demate of connectors, test results, and anomaly information..

c. Provide component test information, specifically trending and calibration curve data.

4.2.3 Facilities

Facilities provides the following support:

a. Scheduling the availability of the various facilities used by I&T.

b. Maintaining and refurbishing the facilities so that they meet the needs of the EOS–AM program activities.

c. Providing trained and certified personnel to operate the environmental facilities.

d. Supporting movement of flight and ground hardware outside controlled areas as applicable.

e. Providing a security system to limit access into the EOS–AM integration bay.

4.2.4 Quality Assurance/Product Assurance

Quality Assurance provides the following support:

a. Provide receiving inspection for all instruments.

b. Provide in–line/in–process inspection during assembly and test of the EMs and Spacecraft.

c. Assist in resolution of anomalies.

d. Maintain appropriate logs as applicable such as significant events, connector mate/demate, and operating times.

e. Training

4.2.5 Contamination Control Engineering

The Contamination Control Engineer is responsible for implementing and enforcing the requirements of the Contamination Control Plan PN20001412.

These requirements include:

a. Monitoring the Test Bay and Environmental Facilities for acceptable particle counts and molecular deposition levels

b. Training of personnel in the proper practices and procedures of handling hardware in clean room areas

c. Supervision of flight hardware cleanings

4.2.6 EOS–AM Safety Engineering

On the EOS–AM program, Safety Engineering makes inputs to the following, as applicable:

a. Personnel safety requirements

b. Review of procedures

c. Training

d. Flight and ground hardware design and fabrication

e. Spacecraft integration and test

f. WTR Launch site activities

Where as EHS and the WTR set the ground rules for operation within their facilities. Safety Engineering acts as a liaison for the EOS–AM program to ensure that the program is set up to meet those ground rules.

4.2.7 Environmental Health and Safety

EHS activities include setting the standards as well as monitoring the test bays and hallways to ensure that a safe and healthy work environment is being maintained by the resident Spacecraft program. This includes making sure that program activities are complying to applicable Federal, State and local laws and regulations affecting the health and safety of the employees and the environment. Throughout the facilities, EHS is active in emphasizing employee awareness to:

a. Proper use of personal and equipment safeguards

b. Recognizing and reporting potential hazards to a manager or EHS

c. Proper use of safety practices and procedures

4.2.8 NASA–GSFC

NASA–GSFC provides the following support:

a. Review this document

b. Review all Spacecraft level procedures

c. Assist in resolution of anomalies

d. Provide technical support for all GFE

e. Provide technical support for all GFE Bench Acceptance Tests

f. Provide as required the access to the Compatibility Test Van, EOC, and the TDRSS satellite

g. IP support for all instruments

5 TEST DOCUMENTATION

The following sections describe the test documentation to be developed in order to plan, perform, and record spacecraft and subsystem test activities. Figure 10 illustrates the implementation of requirements from the EOS–AM Program plans and design documents into the I&T documentation. The documents that contain all pertinent information relating to spacecraft and subsystem testing are:

a. Test Procedures and Data Sheets

b. Logbooks

c. Test Reports

d. Non–Conformance Reports

e. Command and Telemetry Database

5.1 Test Procedures

5.1.1 Test Procedure Generation

All testing of the EOS–AM spacecraft and its subsystems is performed in accordance with authorized test procedures. Procedures are developed by the I&T organization based upon requirements established by the engineering organization and described in the test plans.

The procedures are written in a clear and concise fashion to provide the reader with a complete understanding of the objectives and methods of the tests. Test procedures are developed in enough detail to cover all aspects of each test, including:

a. Test article configuration

b. GSE configuration and calibration requirements

c. Facility control requirements

d. Test operation instructions

e. Special operating restraints

f. Deviations from Standard Operating Procedures (SOP)

g. Test parameters with acceptable min/max limits

h. Data collection and reporting requirements

i. Special safety constraints

j. Special contamination control constraints

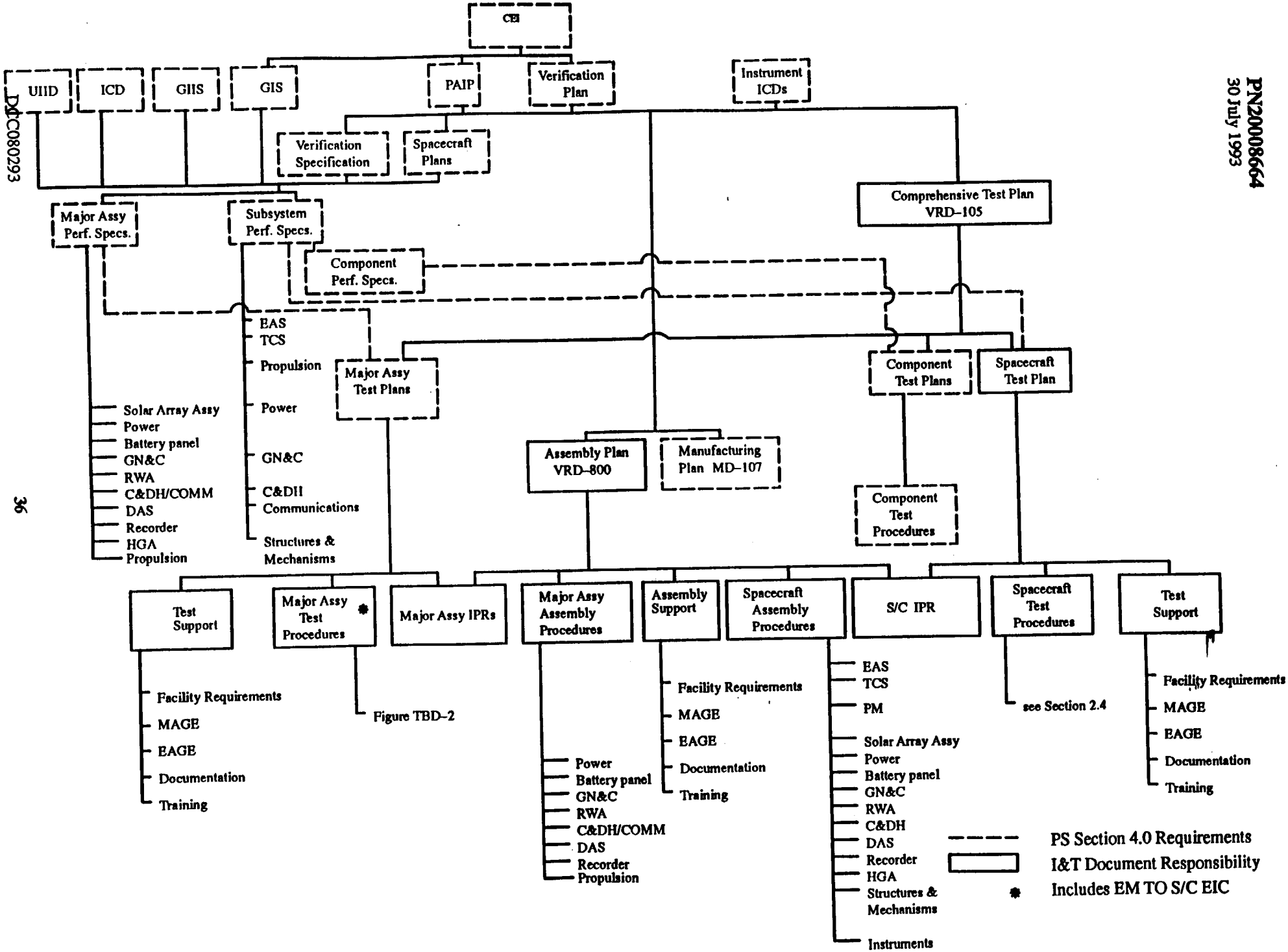

Figure 10. I&T Requirement Document Flow (Sheet 1 of 2)

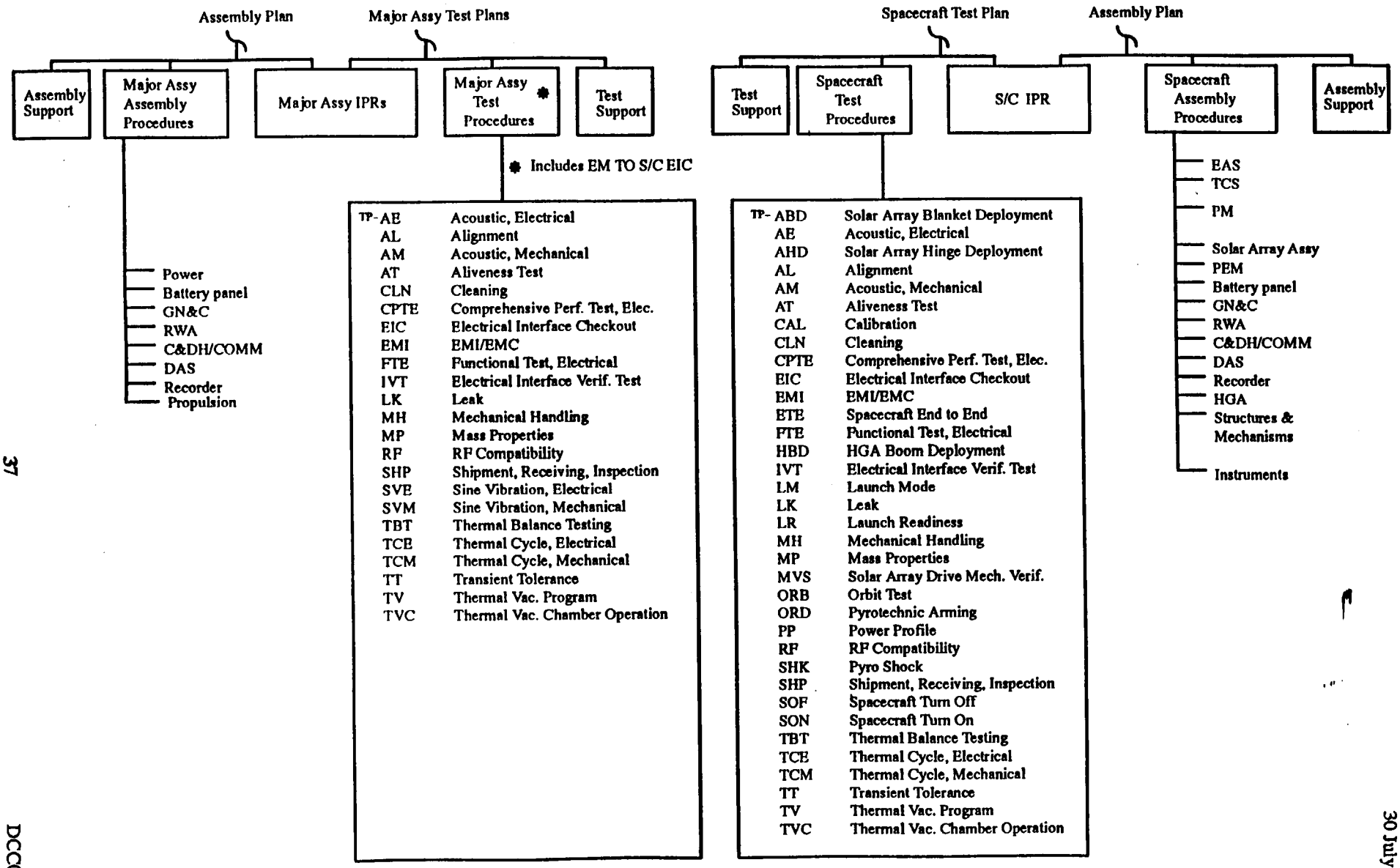

Figure 10. I&T Requirement/Document Flow (Sheet 2 of 2)

Test planning occurs prior to the development of a particular procedure. The responsible I&T engineer reviews the test requirements received from engineering and generates a "Test Concept". The Test Concept, written in English, describes in detail the approach and activities of the test. It is reviewed by I&T management and the engineering organization.

Test procedures are developed from their respective Test Concepts. Spacecraft activities are performed in parallel to the extent practical. Testing is as automated as practical. Procedures are created in the OASIS environment using the Colorado (University of) Standard Test and Operations Language (CSTOL) test programming language. A set of controlled CSTOL command sequences, each having a single defined function, serve as the building blocks for all procedures. Execution of the procedures are performed interactively from a SUN Workstation running OASIS. Coordinating manual activities with automated test procedures is accomplished by including procedure statements that suspend procedure execution.

Procedures provide for real–time data displays and data recording throughout testing. The primary means of recording data is manual measurements made by test personnel and automatic measurements performed by the SCS. Data products resulting from the test procedure are data sheets containing manual entries, printouts of autonomous measurements, snapshots of telemetry taken during the test, post–processed telemetry trending outputs, and archived spacecraft telemetry.

5.1.2 Test Procedure Software

Test procedure software consists primarily of the CSTOL test programs, building blocks, and special FSW memory uploads. Software generated to support test procedures are designed and generated in a modular fashion and stored on the check–out station file server after release. All test software is tested for proper command format and syntax prior to use.

5.1.3 Approval Prior to Use

All procedures are submitted for an in–house review following their generation. Any comments received during this review cycle are addressed by the author and implemented as appropriate. After incorporation of comments and prior to use, the procedure must receive signature approval from the following individuals or organization representatives:

a. Responsible I&T Engineer

b. I&T management

c. Systems Engineering

d. Instrument Accommodations (only for test documents which involve instruments)

e. Engineering Program Manager

f. Product Assurance

5.1.4 Procedure Changes

Procedure changes during testing are made in accordance with the Procedure for Control of Unscheduled Activities During Integration and Verification Testing (20008698). All other procedural changes are made via a Procedure Change Request (see Section 6.2.10.1).

5.1.5 Special Test Procedures

Special purpose tests, which are not part of the approved I&T program, are performed to authorized test procedures. Procedures for these unscheduled activities are prepared in agreement with the Procedure for Control of Unscheduled Activities During Integration and Verification Testing (20008698).

5.2 Logbooks

Logbooks are prepared and maintained during all test phases under the responsibility of the Test Director. These provide daily notes including the status of the tests performed, the progress of the shift completed, any anomalies encountered and corrective action taken.

5.2.1 Test Operations Logbook

The test operations logbook is written daily and includes the rough draft of the daily test report (see Section 5.3.1). The logbook is maintained by the test personnel and contains notes of significant test related events. The log includes times of spacecraft operation, deviations from procedures, anomalies, and problems encountered. All entries are time tagged. It contains all significant information such that the shift's activity can be reconstructed as to what occurred and when.

5.2.2 Mechanical Operations Logbook

The mechanical operations logbook is maintained by the test lead mechanical technician and contains notes of significant mechanical integration related to events that occur during his/her shift. The log includes descriptions of tasks completed, deviations from procedures, anomalies, and problems encountered. All entries are time tagged. It contains all significant information such that the shift's activity can be reconstructed as to what occurred and when.

5.2.3 Ground Station Logbook

The test conductor (or a designated alternate) maintains a logbook that contains notes of all significant events that occur, related to the ground station, during his/her assigned shift. This includes descriptions of all anomalies and corrective actions, entries for all maintenance performed, and descriptions of any equipment reconfiguring. It also serves as the log for the data archival tapes.

5.2.4 Instrumentor's Logbook

Each instrumentor maintains a logbook to provide historical information in regards to the particular instrument and associated GSE. The logbook contains as a minimum, instrument operating times, tests performed, unplanned events, anomalies, and all related problem reports. All entries are time tagged.

5.2.5 Problem Report Logbook

The official Problem Report Logbook is maintained by the Test Controller and remains in the control room. Chronological control numbering is the test controller's responsibility. All original PRs are logged through this system. The logbook is maintained to include copies and closure status for all problem reports.

5.2.6 Mate/Demate Logbook

A log is maintained to record all mates and demates involving flight connectors. The log contains connector reference number, date and time of mate/demate, initials of technician performing mate/demate, indication of mate or demate, and mission assurance initials verifying inspection and witness of mate.

5.3 Test Reports

5.3.1 Daily Test Reports

A Daily Test Report (DTR) for the EOS–AM Spacecraft is prepared under the supervision of the Test Director for each test day's activities. The distribution includes the NASA–GSFC representative resident at Astro Space as well as the NASA/GSFC Project Office.

Typically the DTR includes the following information:

a. Brief statement of tests performed and the significant events which occurred, including all problem reports

b. Preliminary evaluation of results

c. Preliminary conclusions, if any

d. Plan of next day activities

5.3.2 System Test Report

A System Test Report will be generated at the completion of every major test sequence. This report contains a data package including post test analyses, a summary of the major problems encountered and corrective actions, and conclusions and assessments of the tests performed. System test reports are generated following these test sequences:

a. Mission Unique Integration

b. Instrument Integration

c. Electrical System Test (including Compatibility and EMC tests)

d. Environmental Exposure (including Thermal Vacuum and Acoustics)

e. Mechanical Tests (including Shock and Deployment)

f. Post–Environment/Pre–Ship (including Leak and End–to–End)

g. Launch Site

5.4 Non–conformance Reports

All problems relating to procedures, databases, flight hardware, flight software and ground support equipment are initially documented on Problem Reports (PR). Generation of PRs is encouraged no matter how trivial the problem. The PR system serves to record items affecting I&T. Anyone can

generate a PR. Problem reports that are determined to be flight hardware or flight software related are documented on Automated Deficiency Reports (ADRs). Descriptions of PR generation and dispositioning are contained in Section 6.1.8 of this document and in PAP A8.8E. Descriptions of ADR generation and dispositioning is contained in the Product Assurance Implementation Plan (PS20005397).

5.5 Test Database

5.5.1 C&T Database

The EOS–AM program has a program C&T database. This database contains command mnemonic, definition and execution verification information, telemetry mnemonic, location and calibration information as well as limit sets for ambient and thermal vacuum testing. I&T supports engineering in the development of this database. Some of the information contained in this database comes from component test information, e.g., calibration information for analog telemetry sensors.

The I&T C&T database which is used by the GSE software is extracted from the program C&T database. At the start of I&T, the I&T organization assumes responsibility for controlling and updating the program C&T database. Changes to the database will be performed by the Database Administrator (DBA) upon receipt of an approved Database Change Request (DBCR). Configuration control is described in more detail in Section 6.2.10.

5.5.2 Data Displays

Data displays are user–defined information used by the GSE software to display telemetry information in a meaningful way. These data displays permit users to associate text labels with telemetry data and to organize this data such that it is easy to comprehend. The telemetry data can be displayed in various ways as well, including format, calibrated vs raw and as graphical icons.

5.5.3 Memory Loads

Most of the EOS–AM instruments and the Spacecraft Controls Computer (SCC) and the Command and Telemetry Interface Unit (CTIU) in the Command and Data Handling (C&DH) Subsystem contain microprocessors. While the information required to operate these computers is contained, to some extent, in ROM, many of them either require or are capable of being modified via memory loads. Memory load data is contained in a file and is transmitted to the appropriate hardware, as required. In some cases, memory loads are performed as part of powering on the hardware. In other cases, memory loads serve to define parameters which specify how the hardware is to operate.

5.6 I&T Library

A library is maintained for controlled storage of I&T documentation. All library items are available for short term use through sign–out accountability. The following items are contained within the library:

a. Completed Test Procedures and Data Sheets

b. Procedure Change Requests (PCR)

c. Daily Test Reports

d. Problem Reports (PR)

e. Offline Data Analysis Products

f. Test Directives

g. Test Data Tapes

h. Command and Telemetry Database

i. Database Change Requests (DCR)

j. I&T Configuration Control Tapes

k. I&T Spacecraft Drawings

l. Integration Procedure and Records (IPR)

m. Flow Alteration Records (FAR)

n. Configuration Time Line (CTL)

6 OPERATIONS

6.1 Test Operations

All test operations are performed in accordance to approved Astro Space procedures and policies. All deviations from the approved program test sequence or Astro Space operating policies must be approved by the PMO and/or authorizing organization. The Spacecraft Integration Procedure and Record (IPR) is the authorizing document for all spacecraft assembly and test operations. The spacecraft IPR provides a top level road map of the spacecraft build–up and test activities sequence.

6.1.1 Test Readiness

A formal review is performed, prior to major test activities, to certify the readiness of the spacecraft (or subsystem), procedures, support equipment, and facilities. The review team is comprised of representatives from the PMO, Engineering, Quality Assurance, Safety, and I&T organizations. Test readiness reviews are performed for:

a. Initial power application to the spacecraft bus

b. Spacecraft Comprehensive Performance Evaluation tests

c. Spacecraft Thermal Vacuum test

d. Spacecraft Acoustic test

The items listed below are reviewed by designated personnel prior to the scheduled Test Readiness Review (TRR) and unresolved matters investigated for impact on the planned test. The open items, their impacts and a walkthrough of the test procedure are presented at the TRR. A review of the open items assures that the test objectives are not be compromised or a safety hazard does not exist. Authorization to start testing is decided by the review team based upon the review of open items. Concurrence by the SE&I Manager, Engineering Program Manager, Product Assurance Project Engineer, and I&T Manager is required to start testing.

a. Spacecraft Configuration Time Line (CTL)

b. Test Planning

c. Test Procedures

d. Test Software

e. Command and Telemetry Databases

f. Test Equipment (including check of calibration dates)

g. Test Set–up and Fixtures

h. Test Facilities

i. Automated Discrepancy Reports (ADR)

j. Problem Reports

k. Integration Procedure and Records (IPR)

l. Flow Alteration Records (FAR)

m. Test Data

6.1.2 Test Discipline

During spacecraft and subsystem testing, a number of standard test practices are established and enforced in order to ensure a successful and well controlled test program. The four primary practices are: 1) no test is performed without an approved procedure and the approval of the test director and the responsible systems engineer; 2) all spacecraft stations are manned whenever the spacecraft is powered; 3) the instrument ground stations are manned by IP personnel whenever instrument operation is planned; and 4) all anomalies are documented in the problem reporting system (see Section 6.1.8), no matter how insignificant they may appear at the time of occurrence. The enforcement of these standard practices is the responsibility of the entire I&T team with ultimate authority residing with the I&T Manager.

In addition to the above, a number of other practices are used during the I&T program as outlined below:

a. The Test Director schedules and controls all tests at the spacecraft level and the Test Controller is the shift leader during test (see Section 4.1.2).

b. A test log book (see Section 5.2) is maintained for the spacecraft (by the test controller) and the instruments (by the IP personnel) in which are recorded significant test information on a shift by shift basis. Significant test information includes such items as the time at which a subsystem is turned on or off, what test is being run, the particular side of redundant components under test, any anomalies and the time of their occurrence, and significant events or activities occurring during the shift .

c. Spacecraft power is OFF for all mechanical activities on the spacecraft including integration of subsystems, mating and demating of all connectors, alignment and leak tests, installation and removal of test stimuli.

d. Test fuses are installed in line with the flight fuses during electrical integration activities. These fuses are rated to be less than or equal to the derated value of the flight fuse.

e. All signal measurements at the connector interfaces are made through test tees and break out boxes. No manual probing of connectors is allowed.

f. Operating time for redundant components is as balanced as possible.

g. All ground stations are voice linked during testing and will have a copy of the test procedure being performed.

h. All persons notify the shift lead upon entering the clean room to learn of any special rules or exclusions caused by ongoing activity in the bay.

i. All persons in the clean room are under the supervision of the shift leader and/or the test controller, and agree by entering to obey their instructions.

j. All activities within the clean room have the prior approval of the test director and shift leader before commencing. Activities which require touching of flight hardware or GSE which interfaces with flight hardware require the use of an approved procedure.

k. No personnel work alone in any of the test facilities within Astro Space.

6.1.3 Test Coordination

All EOS testing is performed in accordance with the EOS master schedule and lower tier spacecraft integration and test schedules. The schedules are used for all test activity planning, and reviewed and updated as required, through the life of the I&T operation. Individual test flows called out in the I&T schedules may be modified in real–time with the approval of the EOS I&T manager or his designate.

Near term schedules are developed to assist in the planning and coordination of activities in the upcoming 3 and 11–day periods. Daily stand–up meetings are held, at the beginning of first shift, to discuss the previous day's test activities and to review the 3 and 11–day test schedules. Status of the past 24–hour period includes a brief statement of tests performed and the significant events which occurred, including all problem reports. The 3 and 11–day schedules are re–evaluated for proper priorities and readiness to perform the identified tasks. Decisions agreed upon during the meeting are incorporated into the I&T schedules and master schedule where appropriate.

6.1.4 Test Performance

Preparation activities for a test begins many days before the start of the test. It is the Test Directors primary responsibility to coordinate and verify readiness of the procedures, test equipment, manpower, and facilities required to perform a test.

The Test Controller will convene a pre–test briefing within 24 hours of the start of the test. This includes an informal step–by–step walk through of the test procedure. Attendance at this meeting by the test conductor, test technicians, and responsible engineer is mandatory. This meeting familiarizes the entire test team of the objectives, methodologies and constraints of the test to be performed. The meeting also provides a forum for questions for those performing the test.

All test activities are performed to an approved test procedure. The Test Conductor supervises the test personnel during the step–by–step execution of the test while the Test Controller oversees the entire integration and test operation. Each step of the procedure is initialed upon completion by the test technician who performed the operation. The Test Controller initials the bottom of each page to indicate that all steps have been properly completed and to give consent to proceed with testing. During the performance of a procedure, changes and deviations are permitted as described in Procedure for Control of Unscheduled Activities during Integration and Verification Testing of the EOS Spacecraft, EOS Document 20008698.

The typical system level test procedure is a semi-autonomous series of calls to subsystem/instrument building block procedures. Execution of the procedure is controlled by interaction between the operator and the CRT through a series of prompts and responses. A hardcopy of the procedure, identical to that being displayed on the CRT, is distributed to all participating ground stations. The master copy is stamped in red with "Official Test Copy" and remains at the SCS control console. Via the voice link, the test conductor narrates the significant test activities as they occur.

Test data is collected automatically by the SCS in response to the test software being executed. Data from ancillary test equipment is recorded manually in the test procedure and data sheets as directed by the test procedures. Supplemental data and descriptions of significant test events are entered into the test conductors logbook. All data is annotated with the applicable test, date and time obtained, and the involved test personnel. Telemetry is continuously recorded on magnetic tape, and in SCS memory, whenever the spacecraft is powered.

Upon the completion of a test, the Test Controller reviews the entire procedure to verify all steps were properly performed and all associated data was recorded. The Quality Assurance Project Engineer reviews each page of the procedure to verify all steps were performed and the test objectives were not compromised. Data is reviewed by the I&T Test Engineer followed by an engineering representative. Signed off procedures are permanently filed in the EOS-AM I&T library (see Section 5.6).

6.1.5 Instrument Operations

Instrument configuration will be maintained by IP personnel who will ensure that it is appropriate for each test to be performed. This includes installation of covers, thermal blankets, purges, etc. The C&DH and Instrument I&T ICDs will be used to document the configuration of the instruments for each phase of spacecraft I&T including any test constraints.

IP personnel are expected to operate their ground stations whenever the instrument is scheduled to be powered. Following an instrument test or system test in which an instrument participated, the IP provides a quick look assessment of the test data by the next morning meeting. This is an assessment of the instruments readiness to continue with the spacecraft test program. Following this quick look, a report on the complete data analysis is made to the cognizant Astro Space Instrument Accommodations Engineer when available.

6.1.6 Data Evaluation

Real-time, off-line test and post-test data analyses are accomplished in sufficient depth to ascertain test success, in accordance with the test requirements. Such evaluation is performed by I&T with assistance from the PMO Systems Engineering organization as required. Periodic reviews of such data by the PMO and the customer are conducted. All test data analyzed by any person is annotated to indicate the level of analysis performed (checkmarks and/or annotations). All data products are evaluated for out-of-limits conditions. Data involving special instrumentation (such as accelerometers for acoustic test) are evaluated by the cognizant engineering group.

6.1.6.1 Real Time Evaluation

Real time analysis is performed to verify proper response of the spacecraft and that no significant problems exist prior to breaking configuration of the test. In the event of an anomaly, the test configuration remains unaltered until an appropriate review is completed. It is imperative that the test condition, in the presence of an anomaly, be preserved to facilitate troubleshooting and fault isolation.

During conduct of a test, Spacecraft data is continuously monitored. During normal operations, critical Spacecraft parameters are monitored on the CRT and/or remote displays. Any required strip charts are observed in real time to verify test results. Data displays present spacecraft telemetry in varying formats (i.e., tables, plots) on the CRT. These displays are monitored throughout testing for out of limit conditions or unexplained occurrences. The CRT display is also utilized to maintain control of the test sequence. This is achieved by interaction between the operator and the CRT through a series of prompts and responses, many of which are dependent on observed test results When test limits are exceeded, the results are automatically flagged. Real–time analysis consists primarily of monitoring telemetry to verify spacecraft configuration and no out–of–limits conditions.

6.1.6.2 Post–Test Analyses – General

Post–test analysis consists of a quick–look at the spacecraft telemetry display printouts and data manually recorded in the test procedures. The final analysis consists of a detailed review of the spacecraft telemetry display printouts, manually recorded data and any data produced by the ancillary test equipment.

Test data analysis will consist of: verifying that the proper test sequence has been performed, verifying proper spacecraft response, evaluating spacecraft performance, and trending critical spacecraft parameters. The test sequence is generally controlled by test software, and confirmation that the proper sequence was followed during a test is made by comparing the telemetry printouts with the software program. During this process, the proper response of the spacecraft is verified. Performance is evaluated by comparing the test results to baseline runs and/or predicted performance developed through analysis. Test results for those parameters selected for trending are compared against previous results and recorded on the trending charts. Additional test data is obtained through playback of the magnetic tapes containing spacecraft telemetry recorded during testing. These tapes allow for post–test processing of spacecraft telemetry acquired during the testing.

System engineering produces the System Test Reports summarizing the results and conclusions of the major tests (see Section 5.3.2). The report includes a brief description of the tests performed, deviations from the test plan, problems experienced and resolutions, the final data package, evaluation of the test results, and conclusions regarding the state of the spacecraft/subsystem.

6.1.6.3 Trend Data

Trend data is accumulated throughout the I&T process. The data is reviewed after each major test to determine if any meaningful or observable changes has occurred. The spacecraft parameters to be trended are specified in the Verification Plan for the EOS–AM Spacecraft (PN20005404).

6.1.7 Test Abort Criteria

The Test Controller, or his alternate, has the authority to stop a test and to take necessary precautions as may be required to ensure the safety of personnel and the spacecraft. Testing may be interrupted for any of the following reasons:

a. Electrical performance of the spacecraft test does not comply with the limits in the applicable test procedure.

b. Electrical performance of the spacecraft, although meeting the requirements of the applicable test procedure, has significantly changed.

c. Support facilities, including AC power source, instrumentation, or other test equipment, deviate from their specified performance.

d. The spacecraft is physically damaged or is in imminent danger.

e. A severe electrical storm is in progress.

f. Anyone associated with the test feels that continuing would potentially result in damage to hardware or endanger personnel.

6.1.8 Anomaly Resolution

Any test response which falls outside the expected limits is documented using the problem reporting system. Problem reports (see Figure 11) are generated in accordance with PAP A8.8. If the anomaly is determined to be flight hardware or flight software related, an Automated Deficiency Report (ADR) is initiated in accordance with PAP A8.5. Activities that are a consequence of a hardware or software nonconformance are controlled, approved and documented according to the Procedure for Control of Unscheduled Activities During Integration and Verification Testing (20008698).

A Problem Report meeting is held at regular intervals for formal closure of the Problem Reports. The meeting is chaired by the I&T Manager (or his delegate), with required attendance of the Quality Assurance Engineer (QAE), SE&I manager (or his delegate), and the responsible subsystem or system engineer. The customer representative attends the meetings and is provided copies of closed Problem Reports.

Problem Reports that are determined to be hardware related are documented on an ADR. In determining the disposition of the hardware, the QAE will involve representatives as required from Engineering (Parts, Materials, Systems, Test, Design, Reliability and safety), Program Office, Product Assurance, including Failure Analysis and Systems Effectiveness. Actual troubleshooting dispositions are made by the Test Director using Test Directives.

The QAE has full responsibility for Automated Deficiency Reports (ADRs) generated during System Level testing. The QAE in conjunction with the Test Director or I&T manager, directs all activities required to determine and document on the ADR the failure cause, required rework and the corrective actions necessary to prevent recurrence.

MARTIN MARIETTA

Science and Applications
Integration and Test

Astro Space
Problem Report

General Electric Company, Astro-Space Division

Affected Article		P.R. No.
Responsible Engineer/Analyst		Date
Test Situation	Time of Occurrence	Vehicle
Problem Type ○ EAGE/MAGE ○ Data Base ○ Software ○ Procedural ○ Prime Hardware		Item/Sequence No.

Problem Description

Signature Date

Diagnosis/Cause

Signature Date

Corrective Action

Signature Date

Corrective Action Follow-up/Completion

Signature Date

Problem Report Closeout Approval

Signature Date

Signature Date

Signature Date

Signature Date

91-0961M 2/91

Figure 11. Astro Space Problem Report

The QAE, in conjunction with the Test Director or I&T manager, provides recommended disposition instructions to the FRB for approval prior to implementation. The FRB approves all hardware–related dispositions resulting from test failures, with the exception of in–place rework of harnesses. The FRB is chaired by the EOS Product Assurance Manager or designate and includes representatives as required from I&T, Manufacturing, Parts, Materials, Systems, Design, Reliability and Safety Engineering, Program Office and Product Assurance. A resident customer (GSFC) representative also sits on the FRB.

After successful completion of the disposition instructions, the QAE ensures close–out of the ADR. ADRs closed with open corrective actions continue to be tracked by the QAE and worked to full closure. Following full closure by the QCE the ADR is presented to the FRB for review and closeout approval.

6.1.9 Unscheduled Activities

Unscheduled activities are performed as a consequence of hardware or software failure or nonconformance. Unscheduled activities also include situations where immediate action is required of the test operator by reasons of potential or imminent hazard to the unit under test or test personnel. All unscheduled activities are approved, documented and controlled in accordance with the Procedure for Control of Unscheduled Activities During Integration and Verification Testing (20008698).

6.2 General Operations

All general operations pertaining to the integration and test of the spacecraft are performed in accordance to approved Astro Space practices and policies. All deviations from the general Astro Space practices and policies are approved by the PMO and/or authorizing organization.

6.2.1 Contamination Control

Contamination control is provided for integration, test, and transport of the spacecraft. Control of cleanliness is in accordance with Design Engineering documentation as outlined in the EOS Contamination Control Plan (PN20001412). Exposed and accessible surfaces are monitored by several procedures such as visual inspection, witness plates, and swab sampling. Visual inspection of the spacecraft occurs on a regular basis. Tracking of contamination on exposed surfaces of the Spacecraft is accomplished using witness plates which are analyzed gravimetrically. In addition, Swab sampling is used to identify contaminants and to indicate magnitude of deposition..

There are three planned cleanings of the spacecraft during the I&T process (see Figures 4 and 5). The spacecraft will be cleaned prior to instrument integration, thermal vacuum testing, and shipment to the launch site. Cleaning at the Spacecraft level will be done by I&T in accordance with procedures and materials specified in Martin Marietta 2613940, which outlines the guidelines for cleaning components and assemblies at the Spacecraft level. In order to prevent unnecessary abrasion of surfaces and generation of static charge, no dry wiping will be used. Cleaning of GFE will be by or as approved by the supplier. When not undergoing testing, Spacecraft Bus thermal

radiators (Ag–Teflon) will be protected with an approved non–contaminating film. Sensitive optical surfaces will be protected with appropriate covers at all times, except when the optical unit is undergoing testing.

Contamination control requirements for the launch site is defined in the launch site ICD. Verification includes witness plate monitoring as specified by Astro Space.

6.2.2 Clean Room Practices

In order to preserve the cleanliness of the EOS–AM spacecraft, clean room practices, as discussed in the EOS Contamination Control Plan (PN20001412), are followed. Access to the clean room facilities are controlled and all activities are monitored jointly by the designated I&T contamination control persons, Quality Assurance technician and the Contamination Control Engineer. In general the following apply:

a. All persons are escorted inside of the clean room unless they have received Astro Space training and certification. Training and certification consists of attendance at three courses: Environmental Health and Safety (EHS) Familiarization, General Clean Room Etiquette and Clean Room Practices for EOS.

b. All persons entering the clean room wear clean room coveralls, hoods, facial mask (to cover moustaches and beards) and booties. These items are provided by Astro Space along with appropriate laundry services.

c. All persons near to or touching flight hardware will wear approved gloves except where the wearing of gloves could pose a hazard to personnel or flight hardware.

d. It is recommended that all instruments be covered with a protective cover as much as possible during I&T to reduce the accumulation of particulate contamination. Purging of instruments is also recommended as an additional means of reducing contamination.

All equipment entering the clean room must be clean and compatible with the controlled environment. A tent is utilized to contain contaminants from incompatible equipment that is required in the bay. For instrument GSE which is used in the clean rooms at Astro Space, the IP provides documentation and certification that this equipment is clean room compatible. Likewise for equipment to be used in the Thermal Vacuum chambers at Astro Space, the IP provides certification and supporting documentation that this equipment is non–outgassing and compatible with use in the Thermal Vacuum environment.

6.2.3 Mating and Demating of Connectors

Mating and demating of a flight spacecraft connector is performed as separate steps within an approved test procedure. The mating and demating of flight spacecraft connectors are performed only by those personnel who have received training and are approved by QA. During integration activities or when repeated mates/demates are planned, flight connectors are outfitted with connector savers as required.

Mating and demating of any spacecraft connector, including tees and extenders, are performed with spacecraft power off. Unmated connectors are protected with dust covers.

All mates and demates are witnessed by the Test Conductor and Quality Control Technician and are entered into the Mate/Demate log. Prior to mating of connectors, a visual inspection of the connectors to be mated is performed by the Quality Control Technician. The technician rejects any test tee that is damaged, broken, or corroded. A problem report is written and the test tee is removed from the test area until it is repaired. If required, both sides are cleaned with isopropyl alcohol and allowed to dry before mating.

6.2.4 Test Tees and Breakout Boxes

Test tees and breakout boxes are utilized during EM, instrument integration, and anomaly resolution testing for measuring electrical signals. Breakout boxes are not planned for use during spacecraft level testing. Breakout boxed and test tees remain in the clean area and are stored in a designated cabinet with dust covers installed. Usage of any test tee with the spacecraft requires the following steps:

a. Test tee integrity is maintained by storage in special cabinets. Any questionable test tee is subjected to a continuity and resistance test prior to use.

b. The Quality Assurance Technician visually inspects all pins prior to use. The technician rejects any tee that is damaged, broken, or corroded, and if required, cleans all sockets and pins with alcohol.

c. A qualified Test Technician or Final Assembly Wireman verifies connector designation and orientation and insert the tee into the box and/or harness connector. Witnessing and logging of test tee mating/demating follows the flight connector mate procedure. The serial number of the tees and breakout boxes is recorded in the Mate/Demate logbook.

d. The breakout box is inserted into the test tee standard interface connector.

e. The breakout box is supported such that its weight places no stress on the flight harness.

f. Flight fuses are buffered at the derated value of the flight fuse, or as specified by the Electrical Systems Engineer, in special fuse buffered connectors. Fuse buffers are continuity checked before and after use.

Test tees are removed after completion of the test requiring their use except when necessary for troubleshooting. The test tee is immediately returned to storage upon removal.

6.2.5 Connection of External Leads to Spacecraft

GSE interconnection cabling mating and demating is performed in accordance with the established procedures for mating test tees and flight connectors. Test leads are disconnected from the spacecraft if monitoring or measurements are not in progress. Disconnection of test leads is from the spacecraft first and then from the measurement device.

Test DVM leads have in line protective fuses with .25 amp maximum rating. Oscilloscope measurements are made using differential input probes.

6.2.6 Grounding Restraints

All test equipment which directly interfaces with the spacecraft has its chassis connected to spacecraft ground and is isolated from building or safety ground. Isolation transformers are used for all test equipment which will connect directly to the spacecraft. The isolation transformer is wired such that building or safety ground connections are left open. The transformer case and safety ground are connected to spacecraft ground.

6.2.7 Electrostatic Discharge Precautions

Special handling procedures are required to protect the spacecraft from Electrostatic Discharge (ESD) related damage. ESD precautions are defined in the Electrostatic Discharge Control Plan (3261414).

6.2.8 Training

Training provides the I&T personnel the necessary skills and knowledge required to safely integrate and test the spacecraft. Training includes standard practices, equipment operation, personnel and hardware safety, clean room practices, and spacecraft handling. Contributions to the training curriculum come from EHS, Safety Engineering, Quality Assurance, Contamination Control, and Environmental Test Facilities groups. Individuals are trained in the areas required for their responsibilities. The following training is available:

a. EOS I&T Operations

b. Spacecraft Handling

c. ESD

d. Connector Mating/Demating

e. Wireman Certification

f. Soldering

g. Crimping

h. EHS Practices

i. Clean Room Practices

j. SCS Operations

k. Special Test Equipment Operations

l. Three Axis Positioner Operations

m. Crane Operations

6.2.9 Safety

All I&T activities are performed in accordance with the safety practices established in the Astro Space operating policies and approved EOS procedures. These policies are designed to first protect personnel and secondly to protect the flight hardware. Strict adherence to safety rules is the top priority of the I&T bay operations. Monitoring of bay operations for safe practices is the responsibility of everyone with ultimate authority residing with the I&T Manager. The Safety organization grants final approval for all safety policies and performs routine inspections of the bays. An overview of the general safety practices is given in the following sections.

6.2.9.1 Safety of Personnel

No one is exposed to any hazardous environment without understanding the necessary safety information, following the appropriate precautionary measures, and properly using the correct protective devices.

No test procedure is accepted for use, unless it provides for complete isolation of all personnel from hazardous conditions involved in the test setup. The Test Controller has authority to refuse acceptance on this basis.

Unless at least two people are present, neither the equipment under test nor the test equipment is energized.

All personnel handling, installing, or mating to Electro–Explosive Devices (EEDs) are certified through the Astro Space Explosive Handling course.

Personnel are required to wear hard hats when in the immediate area of overhead cranes in use.

All work platforms are required to be equipped with guard rails and toe boards.

No personnel are allowed to work under a suspended load.

Ammonia sensors are utilized in all work areas to detect leaks in the spacecraft and test coldplates.

6.2.9.2 Product Safety

Test personnel are instructed by the I&T Engineer in the proper use of equipment and specific safety aspects of each operation.

All equipment under test and test equipment is continually observed to detect tendencies toward malfunctioning, especially equipment which could cause destruction. Any indication of malfunctioning is cause for powering down the affected equipment and returning it to the proper repair activity.

Test equipment is used only in ways prescribed in written test procedures.

Test equipment is not used if the calibration schedule has expired.

There is no planned testing with test equipment where calibration is expected to expire during the course of the test.

Faulty equipment of any kind is plainly tagged, to prevent further use until repaired.

Each test setup is connected to the building ground, at a minimum of one point. This connection is made before any equipment is energized and is not removed until the setup is dismantled.

Every connector to ac house power must contain a third wire to the ac system ground.

All high–voltage terminals are be enclosed behind appropriate covers to prevent access to them while in operation.

Equipment flows are planned to minimize the amount of handling and movement.

All tools are tethered when personnel are working above any part of the spacecraft

6.2.10 Configuration Control

The I&T organization has the responsibility for configuration control of the program command/telemetry database and integration and test procedures. This does not include test software developed by software engineering or GSE engineering. Only information and equipment that is under configuration control is used to assemble and test flight hardware.

Each time a new baseline is generated, it is permanently archived. This makes it possible to restore a previous version, if necessary. A memo is also generated to document the changes that have been made and to notify the Test Director of which version is now available. Verification that this is indeed the version being used is the responsibility of the Test Director as part of verifying test readiness.

6.2.10.1 Test Procedures and Integration Procedure and Records

Test Procedures (TPs) and Integration Procedure and Records (IPRs) are configuration controlled by I&T. This information is maintained in electronic form on the EOS–AM Integrated Information System (IIS). It is available in read–only form to anyone supporting the program. Changes to these documents require an approved Procedure Change Request (PCR).

TPs and IPRs are approved prior to use. Any significant change to these documents after they have been approved requires that they be resubmitted for approval. The following signatures are required for approval:

a. Responsible Engineer

b. EOS–AM SE&I Manager

c. EOS–AM Engineering Program Manager

d. EOS–AM Product Assurance Project Engineer

e. EOS–AM Test Director

Once the TP or IPR has been approved, it is placed under configuration control. Changes are permitted with an approved PCR. The PCR provides detailed information as to the changes being made to the document. The following signatures are required for PCR approval:

a. Responsible Engineer

b. EOS–AM SE&I Manager

c. EOS–AM Product Assurance Project Engineer

d. EOS–AM Test Director

TPs and IPRs are maintained in an electronic as well as hardcopy form. Assembly and test activity can only be performed with the procedure in hardcopy. This document will have "Official Test Copy" stamped in red ink on every page. A new copy of the document is required whenever the activity is to be repeated. In addition, the Test Controller verifies that the current hardcopy document is consistent with the electronic version prior to the start of an activity.

During the performance of a procedure, changes and deviations will be permitted as described in Procedure for Control of Unscheduled Activities during Integration and Verification Testing of the EOS Spacecraft, EOS Document 20008698. Any permanent changes made during the performance of a procedure result in the generation of a Problem Report (PR) against the procedure at the end of the activity. This PR is only closed after a PCR has been approved for the procedure and the changes have been incorporated.

6.2.10.2 Test Database and CSTOL Procedures

Configuration control of the test database and CSTOL procedures (often referred to as building blocks) is the responsibility of the I&T organization. This information is maintained electronically on the IIS and is available in read–only form to anyone supporting EOS–AM I&T. Initial submittal of and subsequent changes to this information require an approved Database Change Request (DCR). The following signatures are required for DCR approval:

a. Responsible Engineer

b. EOS–AM SE&I Manager

c. EOS–AM Test Director

7 TEST SUPPORT REQUIREMENTS

7.1 Support Equipment

Electrical and mechanical ground support equipment (EGSE and MGSE) provide the resources required to integrate, test and transport the EOS–AM Spacecraft. The intent of this section is to provide an overview of the EGSE and MGSE utilized during spacecraft I&T and launch site activities. Detailed definition of the support equipment is contained in the Ground Support Equipment Requirements Document (GSERD) 20001430.

7.1.1 Electrical Ground Support Equipment

The EGSE is comprised of the Spacecraft checkout station, equipment module special test equipment (EM STE), Spacecraft interface simulator (SIS), and launch support equipment (LSE). The major EGSE systems are of modular design and can accommodate a wide range of hardware and test configurations. Most of the EGSE systems provide computer–driven test capability and automated or computer–assisted test data collection, reduction, summarization, analysis, and display. The major EGSE systems are identified in Figure 12.

7.1.1.1 Spacecraft Interface Simulator

The SIS is used at the various facilities where EOS Spacecraft instruments are developed to demonstrate the compatibility of the electrical interfaces between the instrument and the Spacecraft bus. The electrical interfaces include Spacecraft power simulation, science bus and high–rate data link interfaces, and BDU command and telemetry services, Time Mark and Frequency Bus interfaces, and Command and Telemetry Bus interfaces. The SIS is designed for transportability between Astro Space and IP locations. The SIS is an automated computer–based test set consisting of a SUN Workstation running OASIS. Instrument tests are developed in the OASIS environment, thus allowing for the identical test modules to be utilized during spacecraft I&T in the SCS OASIS environment. The SIS is not planned for use during spacecraft I&T.

7.1.1.2 Equipment Module Special Test Equipment

The EM STE group is comprised of five different types of test stations that are used during EM assembly and test. These stations are computer–based and operate in a stand–alone configuration to provide the appropriate environment for functional testing of the particular EM. The stations are interfaced to the SCS Test LAN for the purpose of downloading software or uploading test data. During spacecraft I&T the primary roles of the EM stations are off line EM testing and to provide redundant hardware for the SCS.

7.1.1.3 Spacecraft Checkout Station

The SCS contains the majority of the Spacecraft–level test equipment, and is configured as shown in Figure 13. The SCS interfaces to the Spacecraft via the test port, solar array connector, umbilical connection point, S–band omni antenna connections, high gain antenna connector or HGA test

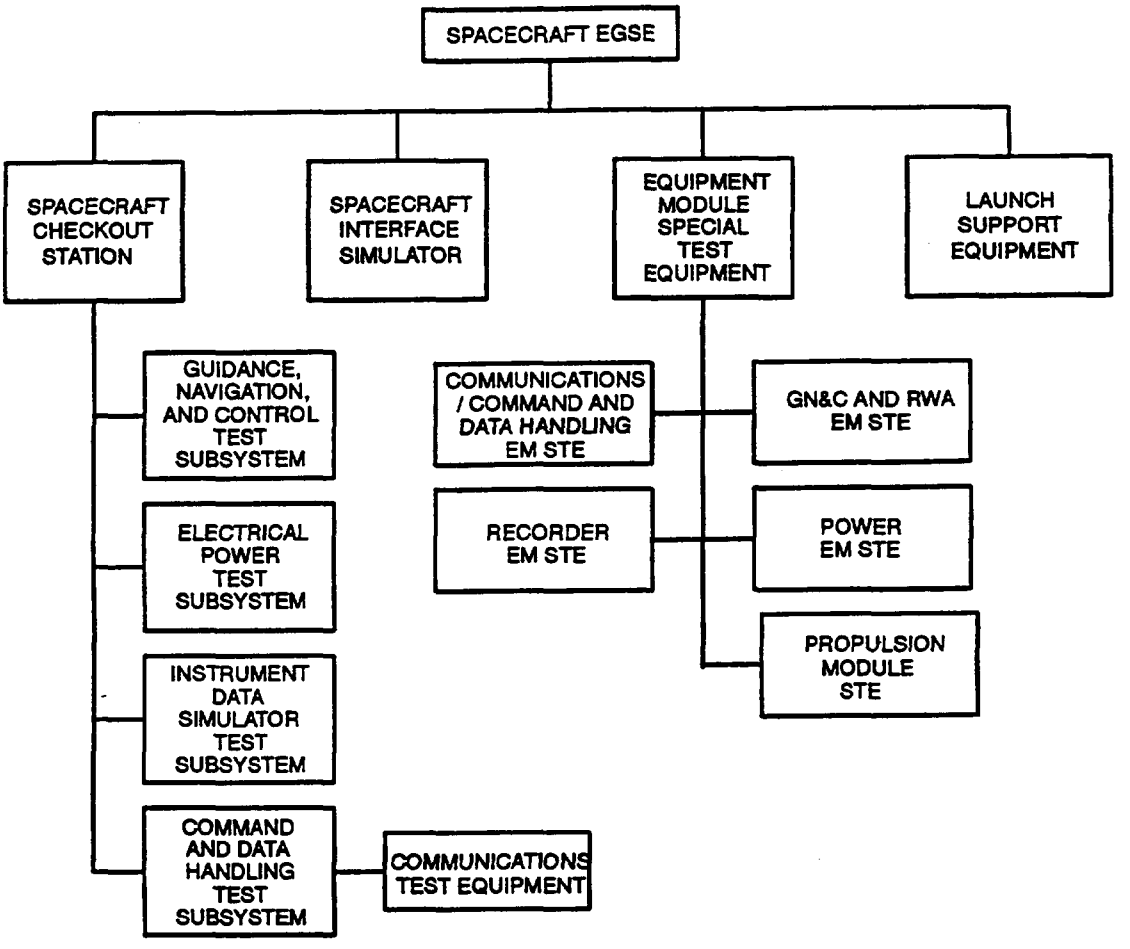

Figure 12. Spacecraft Electrical Ground Support Equipment (EGSE)

connections, DAS antenna connections, and certain EM test connectors. The SCS provides command, telemetry, and science data handling services. The SCS also provides power to the Spacecraft dc bus, and stimuli to the GN&C sensors. Comprehensive Spacecraft tests are supported once all EMs are installed.

The majority of the SCS equipment is remotely located from the spacecraft in an effort to minimize traffic and equipment around the spacecraft. The main computer, operator workstations, and instrument GSE are located in the spacecraft test control room (see Section 7.3.6). The Bay 8 mezzanine (see Section 7.3.7) houses GSE that must be located close to the spacecraft. This equipment includes the power control racks, RF uplink and downlink equipment, and target controllers. Communications between the remote–located equipment occur via the Ethernet Test LAN. The only support equipment required in Bay 8 is the Ku– and X–band downconverters and the CPHTS ground cooling equipment.

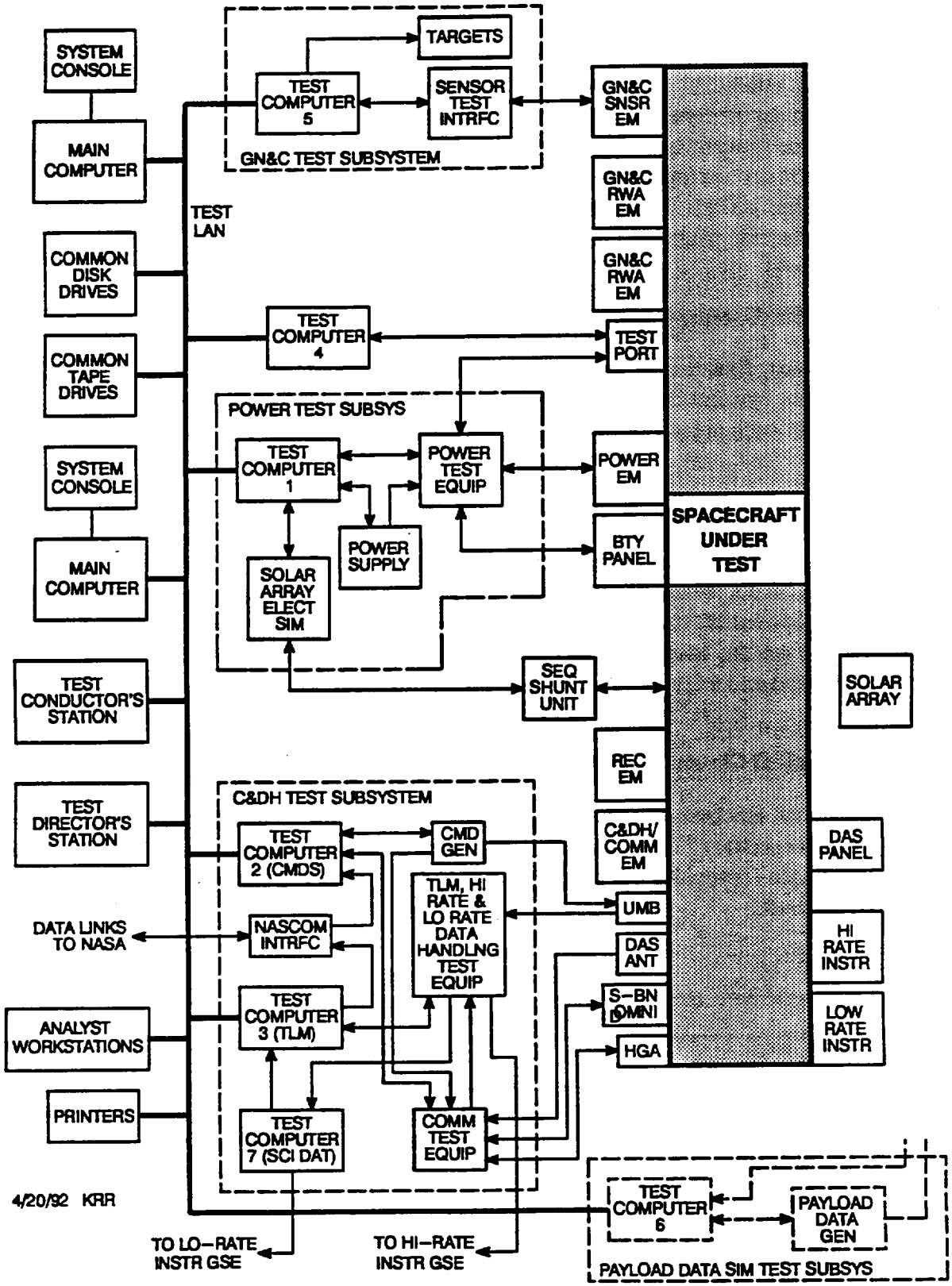

Figure 13. Spacecraft Checkout Station

7.1.1.4 Test Coldplate Systems

The Test Coldplate Systems (TCPS) provide ground cooling of the instruments ASTER SWIR, ASTER TIR, and MOPITT. In flight cooling of these instruments is provided by the Capillary Pumped Heat Transport Systems (CPHTS). The TCPs simulate cooling characteristics of the CPHTSs during instrument bench tests and during phases of spacecraft level integration and test when the CPHTSs are not operating. The TCPS assembly at the Spacecraft level consists of a recirculating chiller, a Data Acquisition and Control System (DACS) and auxiliary equipment which plumb to the test channels of the flight cold plate.

7.1.1.5 CPHTS Ground Cooling System

The Ground Cooling Systems for the CPHTS provide cooling of the flight radiators during their verification. These systems consists of a recirculating chiller, a control and monitoring system, a heat exchanger for each unique radiator and auxiliary equipment.

7.1.1.6 Launch Support Equipment

The launch support equipment (LSE) provides electrical power to the Spacecraft through the umbilical harness during prelaunch checkout. The LSE also includes separate battery charger power supplies for the Spacecraft batteries and acquisition circuitry for monitoring critical Spacecraft parameters while on the launch vehicle. The LSE, in close proximity to the launch vehicle, interfaces command and telemetry traffic between the Spacecraft and the remotely–located SCS.

7.1.2 Mechanical Ground Support Equipment

Various mechanical, electromechanical, and pneumatic–mechanical equipment is used, to support and manipulate the primary EOS–AM Spacecraft, throughout the various stages of I&T and launch site activities. Table I provides a description of the MGSE used to support the verification of the EOS–AM Spacecraft.

Table I. EOS Spacecraft MGSE

Spacecraft Level MGSE Fixtures		
1.	Three–Axis Positioner	Spacecraft integration fixture "rolls" Spacecraft structure ±180 deg. along horizontal axis ("x") for installation of mass models, Instruments, Equipment Modules, etc. Also rotates Spacecraft about its "z" or "y" axis 0 through 90 deg. to bring Spacecraft "x" axis from horizontal to vertical
2.	Spacecraft Horizontal Lift Sling	Counterweighted "H" beam sling used to transfer the Spacecraft horizontally ("±z" or "±y" up), in various c.g. configurations, between different fixtures, e.g., TAP to METS

Table I. EOS Spacecraft MGSE (Continued)

Spacecraft Level MGSE Fixtures (Continued)		
3.	Spacecraft Vertical Lift Sling	"Y" shaped structural sling used to lift and transfer the Spacecraft vertically ("+x" up only), in various c.g. configurations, between different fixtures, e.g., TAP to Precision Rotary Table
4.	Spacecraft Aft MGSE Booster Adapter	Replaces, and interfaces with same Spacecraft "–x" nodes as, flight Booster Adapter (BA). Serves as the Spacecraft's interface between its primary structure and the MGSE for handling (rotating, shipping, etc.) and testing (acoustic, T/V, etc.)
5.	Spacecraft to Shipping Container Aft Adapter	Serves as the major structural support, in conjunction with the MGSE BA, for the assembled Spacecraft during shipping as well as providing the aft interface to the GRO shipping container
6.	Spacecraft to Shipping Container Forward Adapter	Provides single axis structural support for the assembled Spacecraft during shipping as well as providing the forward interface to the GRO shipping container
7.	Leak Test Bag	Airtight enclosure used to contain and detect gaseous leaks from the Spacecraft Thermal Control Subsystem and Propulsion Subsystem
8.	Spacecraft Shipping Container	Environmentally controlled (temperature, humidity, and cleanliness levels) "hard" protective enclosure which houses and structurally supports the completely assembled Spacecraft and adapters for "over the road", air, and sea travel (modified GRO/UARS container)
9.	Vertical Test Stand (Acoustic)	Mobile structural frame which interfaces to the flight Booster Adapter and supports the full–up Spacecraft in a vertical ("+x" up) attitude during the acoustic test
10.	EMI Test Fixture	Individual "RF" absorbers, (hat shaped), strategically placed near the spacecraft to absorb RF energy throughout Spacecraft level EMI testing
11.	Horizontal Test Stand (UARS METS) for certain I&T activities, e.g., Propulsion Module	Fixture used for Spacecraft environmental tests in a horizontal configuration, e.g., thermal–vacuum. May also be used to position Spacecraft and provide access Installation.

Table I. EOS Spacecraft MGSE (Continued)

Spacecraft Level MGSE Fixtures (Continued)		
12.	Static Load Test Fixture	Structural stand which supports the complete Spacecraft structure with mass models and reacts specified loads applied to the Spacecraft structure at specific points which simulate worst case load conditions incurred during launch
13.	Modal Test Fixture	Rigid plate designed for stiffness used to support the Spacecraft structure with mass models during "natural frequency" mode tests
14.	Pyro Shock Fixture	Add–on to the acoustic test fixture which will catch the fired pyro bolts and the flight Booster Adapter during separation tests
15.	Mass Properties Adapter	Interface adapter between payload and mass properties fixture.
16.	HGA Boom Spacecraft Deployment Support System	Fixture used to offset "1G" effects during Spacecraft–level deployment tests of the HGA hinge/boom assembly
17.	Solar Array Assembly Spacecraft Development Test Fixture	Fixture used to offset "1G" effects during Spacecraft–level deployment tests of the Solar Array Assy – 1st stage full deployment & partial blanket deployment excursion
Subassembly Level MGSE Fixtures		
1.	Proof Test Equipment	Test fixture for running proof tests on all Spacecraft handling and test fixtures, e.g., TAP, METS, Shipping Container, EMI Fixture
Thermal–Vacuum Support Equipment		
1.	Thermal–Vacuum Baffles	Large curtains which zone off the thermal–vacuum chamber to present the required view factors to the various Instruments and Equipment Modules mounted on the Spacecraft
2.	Thermal–Vacuum Cold Plates	Individual plates used to simulate the space environment for those Instruments and Equipment Modules whose fields of view to the chamber walls or baffles are blocked by Spacecraft structure or other Instruments, etc.
3.	Thermal–Vacuum Target Pallet	Support structure which holds and positions simulated space targets for various Instruments inside the chamber during thermal–vacuum testing
4.	Thermal–Vacuum Cold Plate Supports	Support structures for portable cryopanels (cold plates)

Table I. EOS Spacecraft MGSE (Continued)

Thermal–Vacuum Support Equipment (Continued)		
5.	SSU Support	Support structure for Sequential Shunt Unit during room ambient and thermal–vacuum tests
6.	Chamber Penetration Plates	Stainless steel plates with connectors or special fittings allowing electrical signals or purge tubes to pass through the thermal–vacuum chamber wall to the Spacecraft Instruments during thermal–vacuum tests

Mechanical launch support equipment (LSE) is needed to manipulate the Spacecraft, its appendages, and instruments for the purpose of establishing the launch configuration after shipment to the launch site. Ground transportation fixtures and containers are provided by the launch vehicle contractor to protect and transport the Spacecraft and its related equipment between the several prelaunch facilities.

For those instruments using CPHTS coldplates for thermal control, ground support equipment is provided to support Spacecraft I&T. Flight coldplates include separate cooling channels, capable of carrying a non–ammonia fluid and being connected to a GSE cooling system to achieve instrument thermal control for ground tests other than thermal performance tests. This system is available for supporting instrument cooling when Spacecraft test orientations do not allow CPHTS operation in CPL or reflux mode.

Additional air–conditioned cooling capabilities are provided to support housekeeping bus and Spacecraft testing in an ambient environment.

7.1.3 Instrument Ground Support Equipment

Instrument providers deliver all EGSE and MGSE necessary to support instrument I&T. A separate instrument ground station area is provided for each instrument. This area is located next to the spacecraft control room.

7.2 Support Software

The software that is used to support I&T consists of two categories of software. The first is resident in the GSE hardware and is used to operate that specific piece of hardware, and is often referred to as GSE firmware. The other category of software is that software which is more general purpose in nature and supports the automated testing of the flight hardware and the off–line data analysis. All of this software is completely tested and verified prior to the initiation of Integration and Test. Updates are made, as required, using standard methodology.

7.2.1 GSE Firmware

GSE firmware is resident in the racks which it controls. It is often tailored to the application. Examples include software to coordinate command distribution and telemetry collection from various chassis in the rack and implementation of a state diagram to ensure that the proper sequences performed or configurations maintained to prevent damage to flight hardware.

7.2.2 Test Software

This software consists of Astro Space–developed, GFE and Commercial Off The Shelf (COTS) software. The on–line, or real–time, software consists primarily of the GFE OASIS software. OASIS provides an automated test capability through the control language CSTOL. OASIS also provides the ability to command and configure GSE, command, control and test the flight hardware, and collect, distribute, process, display and limit check GSE and flight hardware telemetry.

The off–line software supports data analysis, trending, report generation and telemetry data archival. Some of the reports that are generated include:

a. Command Transmission report – List of commands that were transmitted and whether or not they were properly executed

b. Out of Limits Summary report – List of telemetry items that were out of limits

c. Data Quality report – Summary of how many telemetry frames were lost or considered to be bad

d. Operating Time Summary report – Summary of how long various flight components have been in a particular state

This software consists of Astro Space–developed and COTS software. The COTS product PV–Wave is used for data analysis.

7.3 Facilities

This section describes the Astro Space facilities that are used to support the integration and test of the EOS–AM spacecraft. The facility floor plan is shown in Figure 14.

7.3.1 Shipping and Receiving Area

All hardware arriving at the Astro Space, East Windsor, NJ plant is delivered to the Shipping and Receiving Area at the east side of building 409. This area is a standard shipping dock capable of handling equipment which can be offloaded manually or with a fork lift. Equipment must pass through a door 7.5 feet wide x 8 feet high. Equipment requiring an overhead crane or which will not fit through the area door is offloaded at the east end of building 417. The Shipping and Receiving Area is located approximately 300 yards away from the Bench Acceptance Test Clean Room. The hallway between these two facilities is slightly more than 7 feet wide and it is not environmentally controlled. All equipment must be received and inspected before being moved to the Bench Acceptance Test area.

7.3.2 Bench Acceptance Test Control Room

The BAT Control Room is 35 feet long and 15 feet wide. It is located adjacent to the Bench Acceptance Test Clean Room and contains feedthroughs directly into the clean room. Windows in the room provide visibility into the clean room. Access to the room is provided by a double door

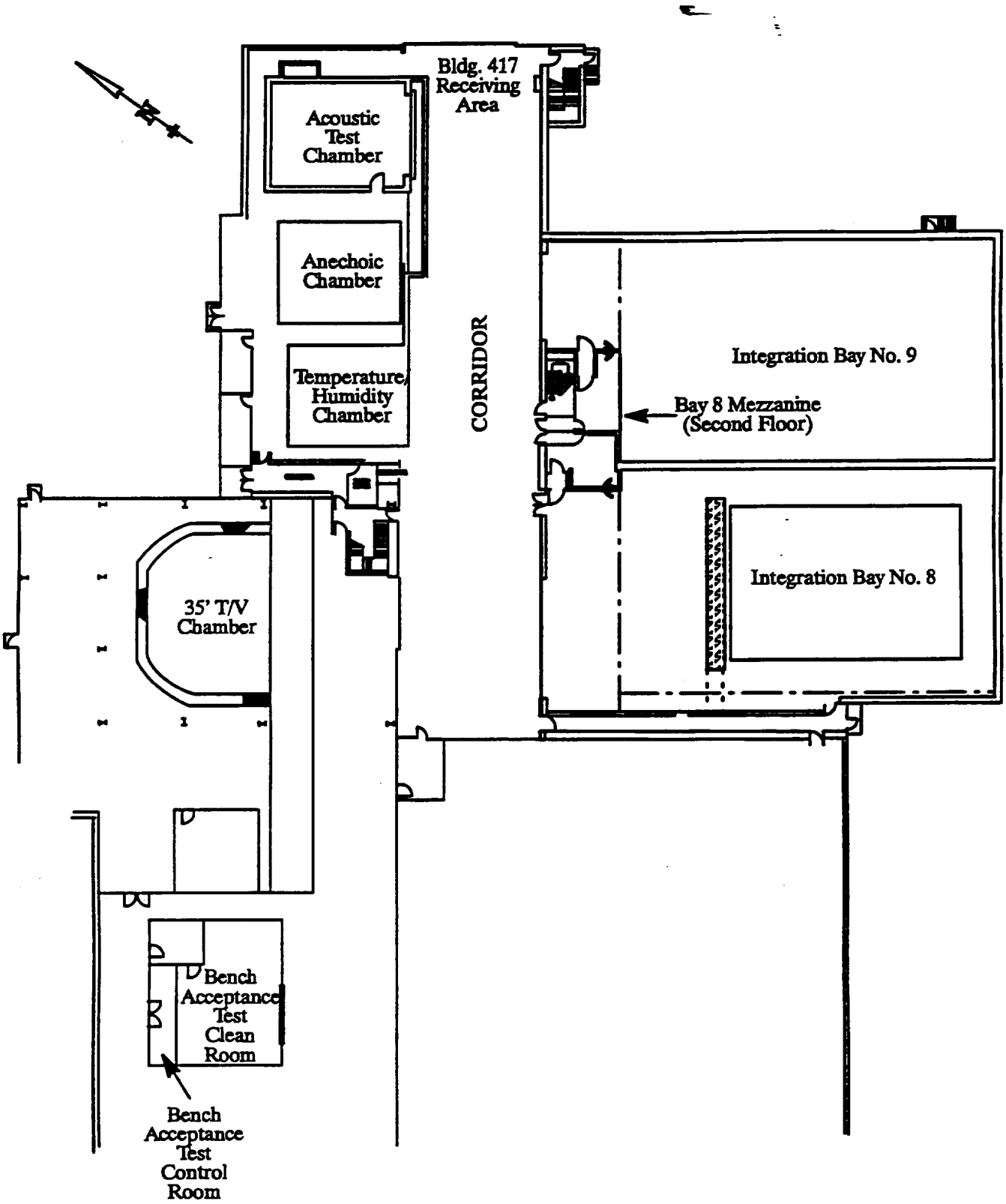

Figure 14. EOS Integration and Test Facilities

located in the rear of the room. All non–clean–room–compatible IGSE required for instrument testing is located in this room. It is sized to permit simultaneous processing of two instruments. Electrical power requirements documented in the I&T ICD will be accommodated. A floor plan of the BAT area is shown in Figure 15.

7.3.3 Bench Acceptance Test Clean Room

The BAT Clean Room is an environmentally controlled room dedicated to EOS instruments for testing and processing prior to spacecraft integration. It is 44 feet long, 35 feet wide and 14 feet high, and is sized to permit simultaneous processing of two instruments. It is maintained at Class 10,000. It is temperature and humidity controlled.

Equipment enters the room through a 12'x12' sliding door. Personnel access is provided via an air shower by a separate door. The room does not have an air lock. A portable two ton crane with a 11' hook height is provided for lifting operations. Air, vacuum and GN_2 connections are available on the wall at multiple locations in the room. Electrical power requirements documented in the I&T ICD will be accommodated. A floor plan of the BAT area is shown in Figure 15.

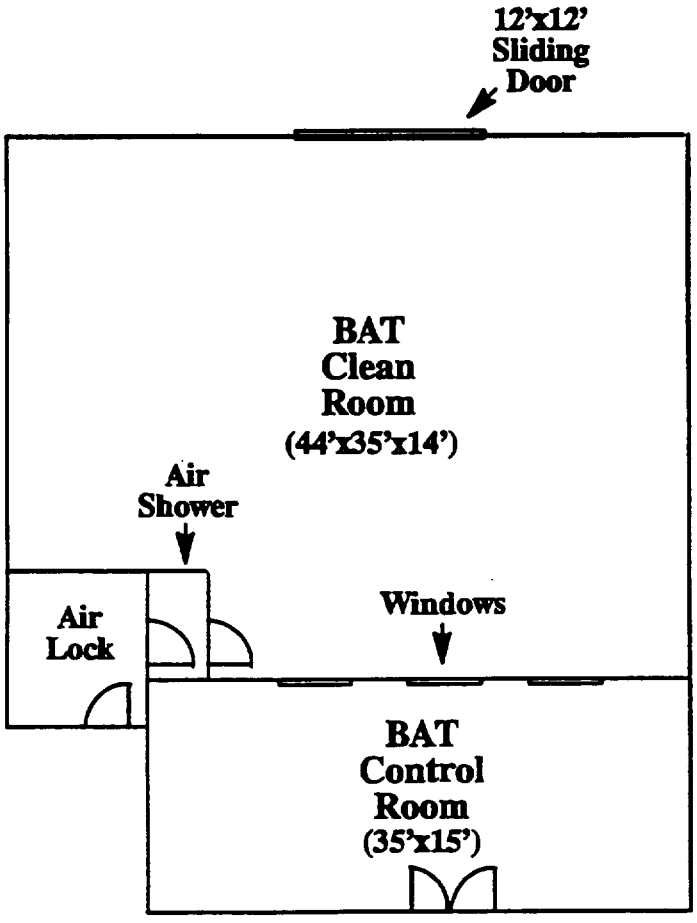

Figure 15. Bench Acceptance Test Area Floor Plan

7.3.4 35–foot Thermal Vacuum Chamber

The 35–Foot Thermal Vacuum Chamber has a working diameter of 35 feet and an inside height of 45 feet. The side–opening 49–foot diameter main door is removable and allows for loading fully integrated test items at floor level. At ambient conditions, it is temperature and humidity controlled, and maintained at Class 10,000. Using two mechanical roughing trains and six 48–inch cryogenic pumps, a pressure of $5x10^{-6}$ Torr is achieved after 24 hours.

The interior surfaces of the 35–Foot Thermal Vacuum Chamber are maintained at extremely low temperatures to simulate the low energy, absorbing characteristics of space. These surfaces consist of a system of eight independently controlled black cooling panels (shroud) which line the walls, ceiling and floor, and through which gaseous or liquid nitrogen or brine is circulated. Each panel can be individually thermally controlled from +125 to –185°C when liquid nitrogen is used. All surfaces facing the test article have an emissivity of $\geq$0.95.

There is a 5 ton crane located on the center line of the chamber ceiling, and three 3–ton cranes located 120° apart, 13 feet from the ceiling center line. Personnel access is provided by a 6.5–foot door. Penetrations for GSE are provided. Chamber instrumentation includes 580 channels for thermocouples (460 channels for the unit under test and 120 channels for the facility) and a 200 AMU residual gas analyzer (by prior arrangement). Emergency power is available.

7.3.5 Acoustic Chamber

The Acoustic Chamber is a reinforced concrete reverberant noise test chamber designed for acoustic generated dynamic simulation testing. The acoustic energy is generated by a flow of nitrogen gas, which is frequency controlled by two Wyle WAS 3000 air stream modulators and two Ling EPT 200 modulators, and temperature controlled to 20°C ±5°C. Up to eight microphones within the chamber measure the acoustic levels, which for test are up to 155 dB and have a shaped frequency range from 25 to 10,000 Hz.. The chamber is equipped with safety interlocks and an air ventilation system. At ambient conditions, it is temperature and humidity controlled, and maintained at Class 10,000.

The Acoustic Chamber is 31.5 feet wide, 41.8 feet deep, and 45.5 feet high. The side–opening door is 25 feet wide by 45 feet high.

7.3.6 Spacecraft Test Control Room

The Spacecraft Test Control Room is located on the fourth floor of building 417, overlooking Bay 8. It is approximately 15 feet long and 10 feet wide. All spacecraft testing is controlled from this room by the Test Controller and Test Conductor. The Control Room contains all test–related documentation. All test stations, including the instrument ground stations, are voice–linked with the Control Room.

7.3.7 Bay 8 Mezzanine

The Bay 8 Mezzanine is located on the second floor of building 417 immediately adjacent to Bay 8. It is located above the Bay 8 air lock and shower. It is approximately 41 feet long and 8 feet high. Half of the area is 20 feet wide. The other half of the area is 12 feet wide. It is used for

non–clean–room–compatible GSE that must be located close (within 100 feet) to the spacecraft. If space permits, it is also used for clean–room–compatible GSE that can be located up to 100 feet from the spacecraft in an attempt to minimize clutter around the spacecraft.

The mezzanine is a raised floor area which accommodates the electrical power requirements documented in the I&T ICD. Personnel access is provided by a door on the first floor. Access is controlled with a cypher lock. Access for equipment is provided by a double door (5 feet wide x 7 feet high) on the second floor which opens into the building 417 corridor. A fork lift and special equipment loading platform are used to move equipment into the mezzanine.

The Bay 8 Mezzanine location is shown in Figure 16.

7.3.8 Instrument Ground Station Area

The Instrument Ground Station Area is located on the fourth floor of building 417, adjacent to the Spacecraft Test Control Room and Spacecraft Checkout Station. Each instrument is provided with a ground station area of approximately 150–200 square feet. Separate office space is provided.

The ground station area accommodates the electrical power requirements documented in the I&T ICD. The area provides fluorescent lighting and forced air cooling (three 115,000 BTU air conditioners), and has a raised floor. The ceiling height is approximately 8 feet.

Access to the fourth floor is provided by an elevator which has a door opening of 3.5 feet wide x 7 feet high. The elevator is 6.5 feet deep and rated to lift up to 3000 lbs.

7.3.9 Integration Bay 8

Integration Bay 8 is located in building 417. It is 112 feet long, 64 feet wide and 65 feet high. It contains a seismic mass which is 70 feet long, 45 feet wide and 6 feet deep. On top of the seismic mass is a 100 ton, 13 feet diameter precision rotary table which is used for spacecraft alignment. The bay contains a 20 ton and a 5 ton crane, each with a hook height of 55 feet. It has a laminar flow air handling system which controls the cleanliness of the bay to better than Class 10,000. The air handling system also maintains bay temperature to ±2°F of the set point and bay humidity within the range 30 to 50%. Access to the bay is provided by a 35 foot wide, 45 foot high sliding door. Personnel access is provided via an air lock and air shower. Access is controlled by a cypher lock. Air, vacuum and GN_2 connections are available on the wall at multiple locations in the bay. A floor plan of the bay is shown in Figure 16.

7.3.10 Calibration and Standards Laboratory

The Standards Laboratory performs the calibration and maintenance of all measuring and test equipment on a periodic basis. This resource will be made available to Instrument Providers for any IGSE requiring calibration after instrument delivery. All standards employed are directly traceable to the National Bureau of Standards and encompass frequency, ac and dc voltage and current, impedance/resistance ratio, capacitance, inductance, impedance, Q factor, power attenuation, vibration and shock, pressure, altitude, vacuum, temperature and magnetics.

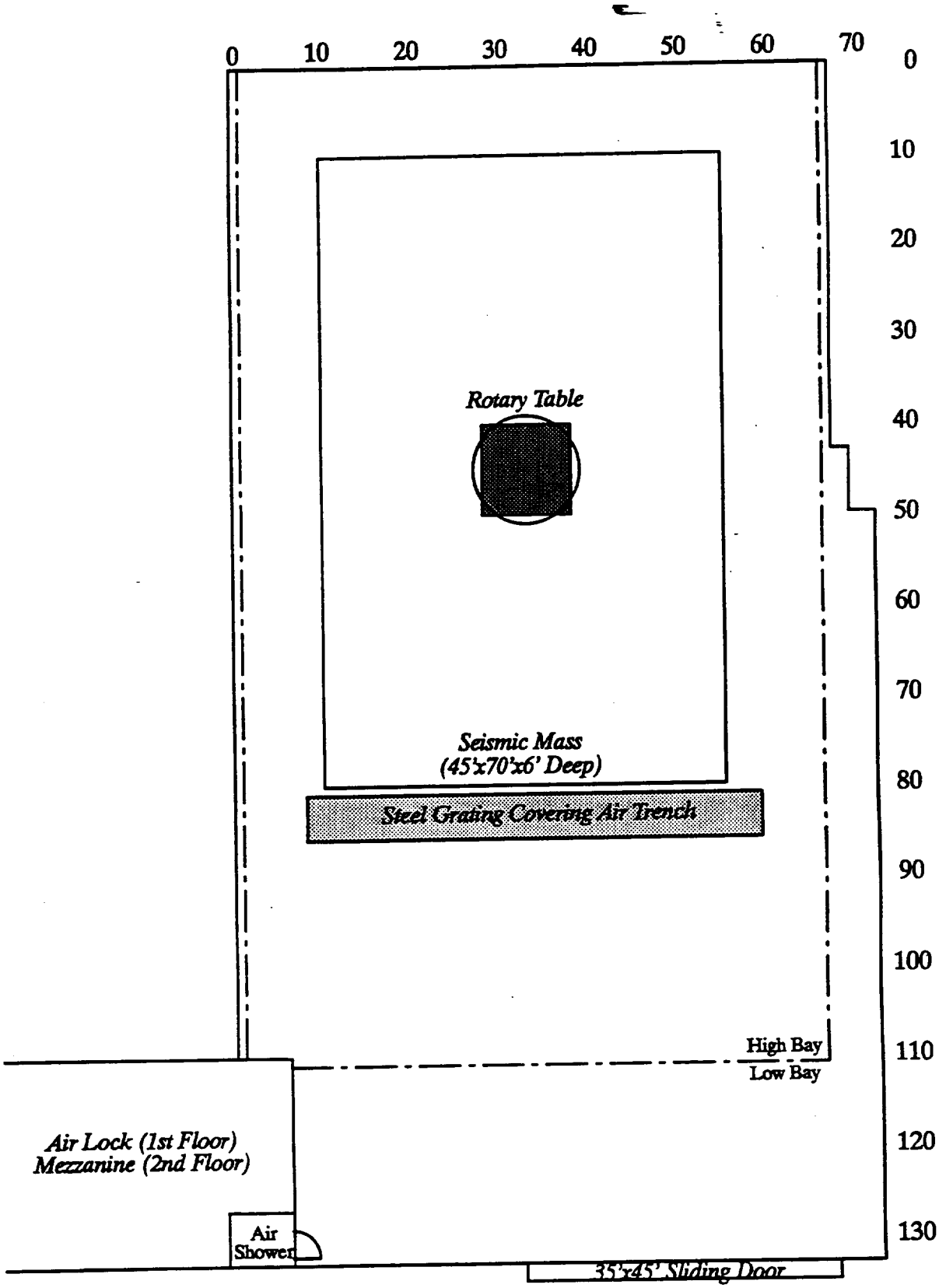

Figure 16. Integration Bay 8 Floor Plan

(This page intentionally left blank.)

8 INSTRUMENT TESTING

Instrument testing at Astro Space is performed during three test phases; BAT, instrument–to–spacecraft electrical integration and checkout, and spacecraft testing. After the instrument is received and inspected at Astro Space, a BAT is performed to verify the instrument is performing properly and is ready for integration with the spacecraft. During integration with the spacecraft, a series of open circuit and mated tests are performed to ensure a safe orderly integration and to verify proper operation with the spacecraft bus. A thermal interface test is performed to verify the CPHTS system. The instruments participate in a series of spacecraft tests to evaluate performance at the spacecraft level and to verify self compatibility. Details of spacecraft testing is provided in Section 10.

8.1 Bench Acceptance Testing

The purpose of the BAT is to verify that the instrument is performing properly and is ready for integration with the spacecraft. As such, it is performed by IP personnel in accordance with IP approved procedures. The instrument is connected to the IGSE and the test cold plate, if required.

The BAT Area is considered by Astro Space and NASA to be an extension of the IP's home facility. Therefore, the normal practices and procedures for the handling and test of flight hardware that are in force at the Instrument Provider's facility are in force within the BAT Area. In the event that these practices and procedures appear to violate Astro Space's policies with respect to the safe handling of flight hardware, the I&T Manager in conference with Astro Space PA, NASA Plant Representative, Instrument Accommodation Engineer (IAE), and IP personnel will decide which policy governs.

The BAT is performed in accordance with IP procedures and may include functional testing, performance testing, calibration and/or alignment. Support is required from Astro Space, i.e., special test equipment, purges or personnel, is agreed upon in advance and documented in the I&T ICD. Data from the BAT is processed by the IGSE and compared to the data produced during the Instrument Pre–Ship Test. The success criteria are determined by the GSFC EOS Project Office and the IP.

Prerequisite Activity:

IGSE Set Up and Checkout (IP must certify IGSE checkout was successful)

Instrument Inspection

Facility:

BAT Area

GSE:

Electrical and mechanical IGSE, as required. It is assumed that any special test stand for the instrument or GSE is provided by the IP unless specifically defined in the I&T ICD.

8.2 Instrument–to–Spacecraft Electrical Integration

The purpose of Instrument–to–Spacecraft Electrical Integration is to electrically integrate all instrument components with the spacecraft. It also verifies all instrument–to–spacecraft electrical interfaces. Instrument–to–Spacecraft Electrical Integration is a series of tests which is performed to ensure the compatibility of all electrical spacecraft–to–instrument interfaces and to demonstrate the proper operation of the instrument once it has been fully integrated. It is performed to Astro Space test procedures that are developed jointly by Astro Space and IP personnel. All testing and measurements are performed by Astro Space I&T personnel with support from IP personnel. Specific details of the test and associated requirements are documented in the I&T ICD.

Electrical integration is performed in three steps. The first step involves an open circuit Interface Verification Test (IVT). It verifies the proper grounding and input of power, commands and signals prior to mating of flight hardware. It is performed by mating one end of the flight harness to the signal source and making measurements at the other end (i.e., the instrument interface) of the harness. The open circuit measurements consist of unpowered and powered measurements. The test configuration includes connector test tees to access harness test points for measurement. Fuse buffers are installed on power bus lines for overcurrent protection. The unpowered measurements ensure proper grounding and ground isolation, and power and power return/ground isolation. These measurements are made at both the spacecraft harness and instrument connector interfaces. The powered measurements ensure proper voltage and signal (command, telemetry, and timing) characteristics. Test results (i.e., oscilloscope photos) are recorded and retained. The specific measurements are listed in Table II. The test configuration is shown in Figure 17.

The second step involves a mated circuit Interface Verification Test. It verifies proper response to power, commands and signals upon initial integration of flight hardware. Photographs may be required to capture cyclic or pulsed loads. Current balance measurements are made for power lines. Current inputs and current returns are measured to verify that total current "In" is equal to current "Out" (in–to–out balance, i.e., no current returned through a signal–to–chassis ground path). Current balance line–to–line is verified for both input and return lines. Loaded signal (command, telemetry, and timing) characteristics are verified and photographed. Current transients and their voltage effect on the associated power bus are measured and photographed while the instrument is exercised through turn–on, turn–off, and operational modes. This test is also the first opportunity to verify proper instrument health and safety telemetry. The specific measurements are listed in Table III. The test configuration is shown in Figure 18. Telemetry displays in the SCS will be used to verify proper telemetry values and limit check states.

The third step involves removing all electrical test equipment from the spacecraft interfaces, mating all spacecraft–to–instrument interfaces, verifying the connector shell–to–connector shell bonding and performing a functional test. The functional test will be defined by the IP and verifies correct electrical and mechanical response in each major operational mode. It tests all command, data and power paths and exercises primary and redundant hardware.

Table II. IVT Open Circuit Measurements

Measurement	Location	Spacecraft Configuration	Criteria
Chassis ground	Spacecraft side of interface (through harness)	Power off	<2.5 mΩ
Chassis ground	Instrument side of interface (through connector)	Power off	<2.5 mΩ
Power line isolation – input to return – input to chassis	Spacecraft side of interface (A&B feeds)	Power off (instrument power relays (A&B) closed)	>(TBD–2) ohms >(TBD–2) ohms
Power bus isolation –A input to B input –A return to B return	Instrument side of interface	Power off	≥100 kΩ ≥100 kΩ
Power isolation – input to signal – input to chassis – return to signal – return to chassis	Instrument side of interface (A&B feeds)	Power off	>1 MΩ >1 MΩ >1 MΩ >1 MΩ
Power – input to return – input to chassis	Spacecraft side of interface (A&B feeds)	Power off (instrument power relays (A&B) closed)	0.0 ± 0.25 Vdc 0.0 ± 0.25 Vdc
Power – input to return – input to chassis – return to chassis	Spacecraft side of interface (A&B feeds)	Power on (instrument power relays (A&B) closed)	120 ± 4% Vdc 120 ± 4% Vdc 0.0 ± 0.25 Vdc
BDU relay drive commands	Spacecraft side of interface (all signals used by instrument)	Power on	+24V to +30V 50<t<60 msec
BDU logic level commands	Spacecraft side of interface (all signals used by instrument)	Power on	per GIIS

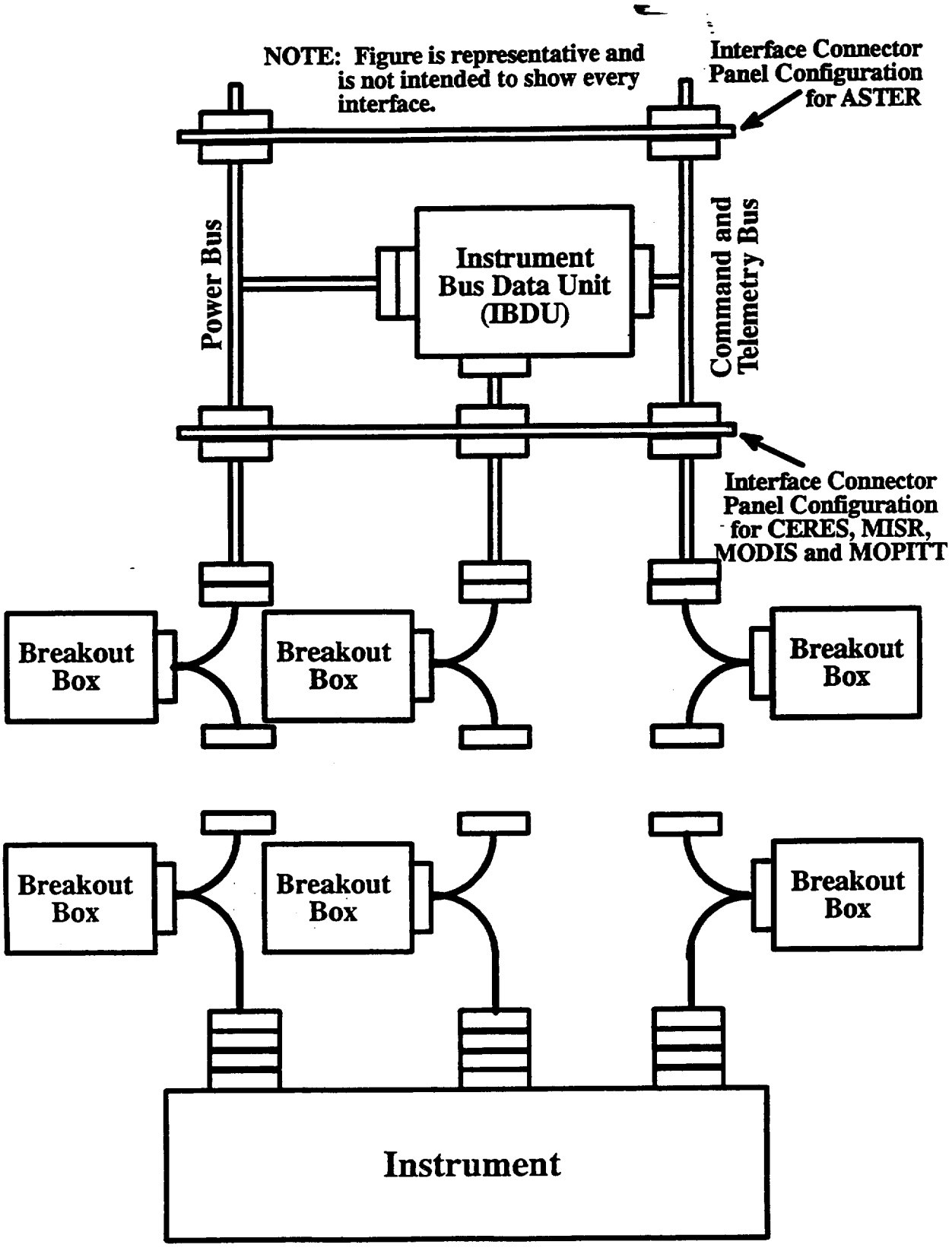

Figure 17. Open Circuit Interface Verification Test Configuration

Table III. IVT Mated Circuit Measurements

Measurement	Spacecraft Configuration	Instrument Configuration	Criteria
Power (for A&B sides)	Power on (instrument power relays (A&B) closed)	Instrument on (initial power on state)	120 ± 4% Vdc
Current In	Power on (instrument power relays (A&B) closed)	Instrument on (initial power on state)	per instrument EICD
Current Out	Power on (instrument power relays (A&B) closed)	Instrument on (initial power on state)	per instrument EICD (Current Out must be equal to Current In to within 5%)
Current Balance – line–to–line in – line–to–line out	Power on (instrument power relays (A&B) closed)	Instrument on (initial power on state)	Current measurements must be equal to within 10% or 5 mA, whichever is greater
Current for each operating mode	Power on (instrument power relays (A&B) closed)	Instrument on (configured for each operating mode)	per instrument EICD
Turn–on/Turn–off transients	Power on (instrument power relays (A&B) closed)	Instrument cycled to/from initial power on state to off	per GIIS
Operating transients for each operating mode	Power on (instrument power relays (A&B) closed)	Instrument on (configured for each operating mode)	per GIIS
Cyclic transients for each operating mode	Power on (instrument power relays (A&B) closed)	Instrument on (configured for each operating mode)	per GIIS
BDU relay drive commands	Power on	Instrument in acceptable configuration	+24V to +30V 50<t<60 msec
C&T bus	Power off	Power off	Time Domain Reflectomer (TDR) measurement via test port
Low–rate science bus	Power off	Power off	TDR measurement via test port
Time and frequency bus	Power off	Power off	TDR or level measurement via test port

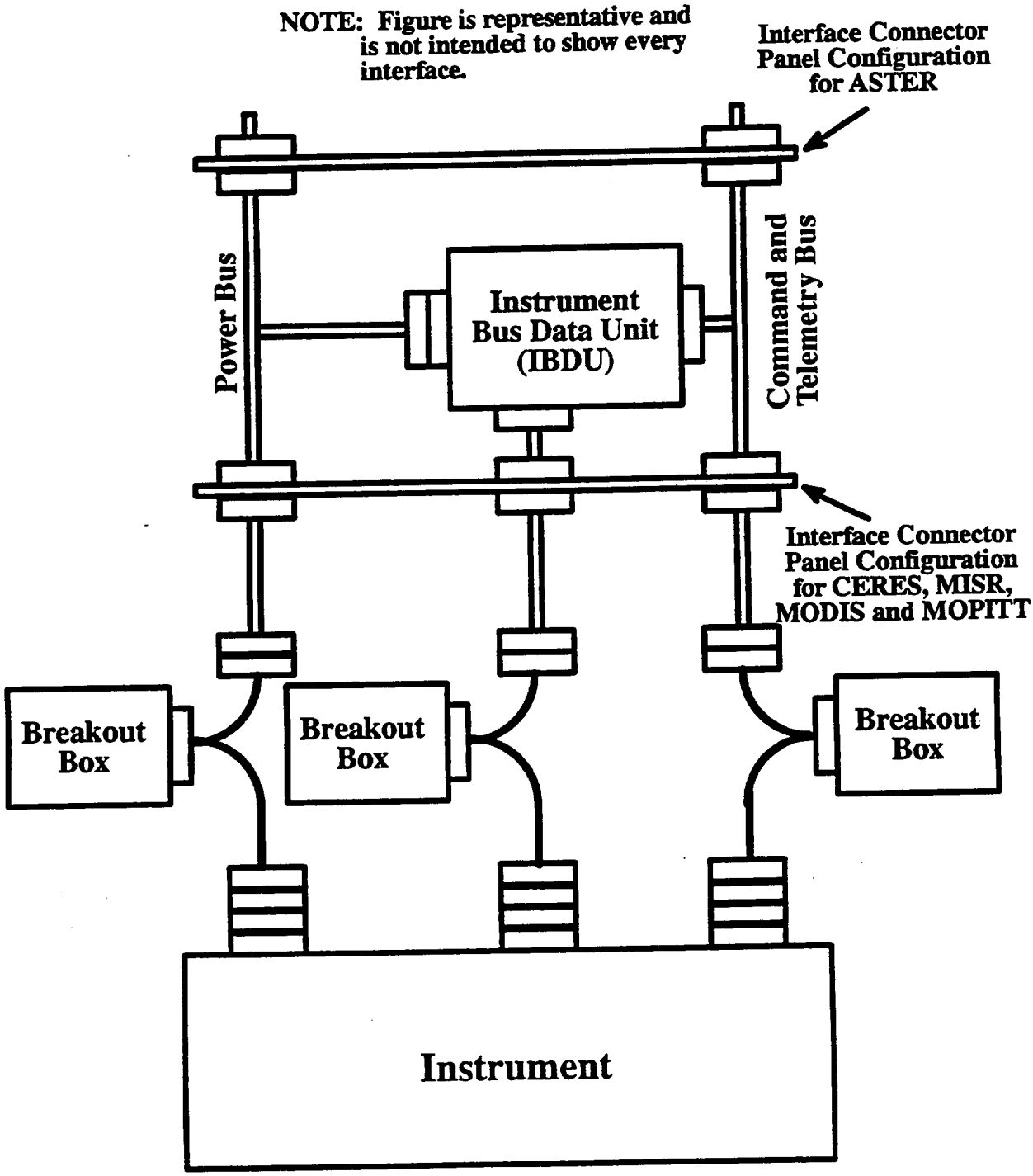

Figure 18. Mated Circuit Interface Verification Test Configuration

Prerequisite Activity:

All instrument–related accommodation equipment is installed and integrated (includes FDB, IBDU, HCE and harnesses).

Protective fuse buffers containing fuses sized at one half the derated size of the flight fuse are installed on the power lines.

All intra–instrument harnesses, if applicable, and instrument ground straps are installed.

Instrument–to–Spacecraft alignment

Instrument–to–Coldplate mechanical integration (if required)

IGSE move to instrument ground station area or Bay 8 mezzanine and set up

IGSE move to Bay 8 and set up

Facility:

Bay 8

GSE:

IGSE required for electrical integration and checkout of the instrument

Spacecraft on TAP

The spacecraft is oriented to provide personnel access to all spacecraft–to–instrument electrical interfaces. Until spacecraft harness routing has been defined, specific orientations for each instrument cannot be determined.

SCS

Test tees, break–out boxes, TDR, oscilloscope, fuse buffers, DVM

8.2.1 Thermal Interface Test

The purpose of the Thermal Interface Test is to verify the CPHTS system after instrument integration to ensure it is capable of transporting waste heat from the instrument. The test requires the instrument to generate heat at the coldplate interface.

Prerequisite Activity:

ASTER and MOPITT mechanical and electrical integration

Facility:

Bay 8

GSE:

Spacecraft is installed in TAP, oriented horizontally with +Z up.

CPHTS ground cooling system

SCS

8.2.2 Instrument Performance Test

The purpose of the Instrument Performance Test is to establish a baseline for use in trend analysis and for comparison with test results from performance testing throughout the spacecraft–level test program. It is assumed that this data can be traced to data collected during performance testing at the IP's facility.

Prerequisite Activity:

Instrument–to–Spacecraft Electrical Integration

Facility:

Bay 8

GSE:

Spacecraft is installed in TAP, oriented horizontally with –Z up.

TAP, SCS, IGSE

Instrument targets, calibration sources

TCPS

9 SUBSYSTEM TESTING

9.1 Overview

Subsystem level testing consists of a series of tests that verify the performance of each spacecraft bus subsystem in the spacecraft environment. Each subsystem is tested independently except where the resources of another subsystem are required. Three basic types of tests are utilized during subsystem level testing: functional, performance, and aliveness. Each subsystem has a separate test (i.e., test procedure) for each test type. Subsystem test procedures are typically integrated into the higher level spacecraft test procedures. Description of spacecraft bus subsystem tests are included in the following sections; details of the instrument functional, CPT, and aliveness tests are contained in the instrument test plans and instrument I&T ICDs.

9.2 Functional Test

9.2.1 Purpose

The Functional Test is performed with no external stimuli applied to the subsystem and verifies correct electrical and mechanical response in each major operational mode. All command and data paths between components are tested, and both primary and redundant hardware is exercised.

9.2.2 Test Environment

Location:	Integration Bay
Cleanliness:	Class 10,000
Temperature:	13 to 24°C
Humidity:	30 to 50%
Access:	Limited
Pressure:	Atmospheric

9.2.3 Test Configuration

Spacecraft:	+Z Down
Test Fixture:	TAP
Test Equipment:	SCS

9.2.4 Test Description

This test is performed with all harnesses and connectors mated in their flight configuration. To the maximum extent possible, telemetry is used to evaluate performance. When this is not adequate, measurements are made via test connectors.

Tables IV through X summarize the primary measurements of each subsystem for the functional test.

Table IV. C&DH Functional Test Measurements

Unit Under Test	Mode (incl side)	Tested Functions
C&DH S/S	All	Verify subsystem can be configured into each of its operational modes. Verify proper power consumption. Verify proper telemetry and proper response to commands. Verify proper initialization states.
CTIU	Science (A&B)	Command Receipt and Distribution, Telemetry Collection and Formatting (1 and 16 Kbps), Dump/Dwell, Bus Management, Time and Frequency Bus, SCC Monitoring, Hardline Telemetry
BDU (incl. H/K & Instr. BDUs)	Science (A&B)	C&T Bus Interaction, Command Processing, Load/Dump, Telemetry Sampling
SCC	Science (A&B)	Flight Software Functionality, Load/Dump, Command Processing, Telemetry Formatting, Self Checks, Time and Frequency Bus
Telemetry Data Recorder	Science (A&B)	Command Response (Record, Playback, Wind), Telemetry
Science Formatting Equipment	Science (A&B)	Command Response, Telemetry, Generation of Fill Data
High Rate Telemetry Recorder	Science (A&B)	Command Response (Record, Playback, Wind), Telemetry

Table V. COMM Functional Test Measurements

Unit Under Test	Mode (incl side)	Tested Functions
COMM S/S	All	Verify subsystem can be configured into each of its operational modes. Verify proper power consumption. Verify proper telemetry and proper response to commands. Verify proper initialization states.
MO	Science (A&B)	None. Operation verified by other component tests.
SBT	TDRS (A&B)	125, 1K and 10Kbps Receive Rates, 1, 16, and 256 Kbps Telemetry Rates, Dump, Playback, Transmitter Power, Transmitter Frequency, Doppler Data Extraction, Ranging, Hardline Command.
SBT	STDN (A&B)	2 Kbps Receive Rate, 1K and 16 Kbps Telemetry Rates, Dump, Playback, Ranging
SBIU	N/A	Relay Commands
KSA Modulator	Science (A&B)	None. Operation verified by other component tests.
KSA Upconv	Science (A&B)	None. Operation verified by other component tests.

Table V. COMM Functional Test Measurements

Unit Under Test	Mode (incl side)	Tested Functions
KSA Xmtr	Science (A&B)	Transmitter Power, Transmitter Frequency, Signal Lock
DAS Modulator	Science (A&B)	None. Operation verified by other component tests.
DAS Upconv	Science (A&B)	None. Operation verified by other component tests.
DAS Xmtr	DB (A&B)	Transmitter Power, Transmitter Frequency, Signal Lock
DAS Xmtr	DDL (A&B)	Signal Lock
DAS Xmtr	DB/DDL (A&B)	Signal Lock
DAS Xmtr	DB/DP (A&B)	Signal Lock
DAS Xmtr	DP (A&B)	Signal Lock
Waveguide Sw	N/A	Relay Commands

Table VI. GN&C Subsystem Functional Test Measurements

Unit Under Test	Mode (incl side)	Tested Functions
GN&C S/S	All	Verify subsystem can be configured into each of its operational modes. Verify proper power consumption. Verify proper telemetry and proper response to commands. Verify proper initialization states.
RWA 1	Science	Verify wheel can be powered and sends tach data, command response, telemetry data, wheel speed
RWA 2	Science	Verify wheel can be powered and sends tach data, command response, telemetry data, wheel speed
RWA 3	Science	Verify wheel can be powered and sends tach data, command response, telemetry data, wheel speed
RWA 4	Science	Verify wheel can be powered and sends tach data, command response, telemetry data, wheel speed
Magnetic Torquer Rods	Science (A&B)	Generate magnetic field on command
PSU (SM)	Science (A&B)	Command response, fuses integrity, current flow through both sides, proper voltages
ACE	Science (A&B)	Command Response; Status Data; RWA and Torquer Rod Commands; SCC I/F; ADE Status and Data; Separation Signals; ESA, CSS, FSS, TAM, IRU, and SSST Data Processing

Table VI. GN&C Subsystem Functional Test Measurements (Continued)

Unit Under Test	Mode (incl side)	Tested Functions
	Safe Mode (A&B)	Command Response; Status Data; Safe Mode Entry and Exit; RWA, Torquer Bar, Truster Commands; SCC I/F; ADE Status and Data; ESA, CSS, FSS, TAM, IRU, and SSST Data Processing
SSST 1	Self–test	Command response, telemetry data, current draw
SSST 2	Self–test	Command response, telemetry data, current draw
IRU	Science (A&B)	Command response, telemetry data, current draw position and rate data
TAM 1	Science	Command response, telemetry data, current draw magnetic field data
TAM 2	Science	Command response, telemetry data, current draw magnetic field data
CSS (SM)	Science	Telemetry data, attitude data
FSS	Science	Command response, telemetry data

Table VII. EPS Subsystem Functional Test Measurements

Unit Under Test	Mode (incl side)	Tested Functions
EPS S/S	All	Verify subsystem can be configured into each of its operational modes. Verify proper power consumption. Verify proper telemetry and proper response to commands. Verify proper initialization states.
PDU	All	Verify bus regulation for all modes and during mode transitions. Verify power distribution to all spacecraft loads
BPC	All	Verify battery charge and discharge functions
SSU	All	Verify shunting of excess solar array power.
Solar Array	All	To be tested as Solar Array Assembly
Battery	All	Verify battery discharge and charge capabilities. Verify pyro bus voltage.
FDB	All	Verify fuses are good, current flow through both sides, proper voltage.
EPC	N/A	None. Operation verified by other component tests.
PSU	N/A	None. Operation verified by other component tests.
ADE	Sides A&B	Verify ADE can supply drive to the SAD for all command states.

Table VIII. Propulsion Subsystem Functional Test Measurements

Unit Under Test	Mode (incl side)	Tested Functions
Propulsion S/S	All	Verify subsystem can be configured into each of its operational modes. Verify proper power consumption. Verify proper telemetry and proper response to commands. Verify proper initialization states.
PMEA	Science (A&B) Delta–V (A&B) Safe Mode (A&B)	Command Response, Serial Status Telemetry, Current Draw
Latch Valve	Science (A&B) Delta–V (A&B)	Command Response, Telemetry Sampling
REAs	Science (A&B) Delta–V (A&B)	Command Response, Telemetry Sampling

Table IX. Thermal Control Subsystem Functional Test Measurements

Unit Under Test	Mode (incl side)	Tested Functions
TCS	All	Verify subsystem can be configured into each of its operational modes. Verify proper telemetry and proper response to commands. Verify proper initialization states.
HCE	All	Heaters powered from both sides, Command Response, Telemetry and status data.
CPHTS	Science	Pressure Switch, Command Response, Temperature/Heater Status Telemetry.

Table X. Electrical Accommodations Subsystem Functional Test Measurements

Unit Under Test	Mode (incl side)	Tested Functions
PRA	All	Command Response, Telemetry

9.2.5 Test Criteria

The measurements will be within specification and compare favorably with component and EM/panel/major assembly level data.

9.2.6 Test Prerequisites

This test assumes all constituents of the subsystem have been electrically integrated, all test tees have been removed and all connectors are mated prime.

9.2.7 Guidelines/Constraints

COMS:

Any open receiver or transmitter port is properly terminated.

All component power is at 120V.

9.3 Comprehensive Performance Test

9.3.1 Purpose

The CPT is a detailed verification that the subsystem meets performance requirements in all operational and contingency modes, to the extent these requirements are testable. All command and data paths are verified as well as all redundant hardware.

9.3.2 Test Environment

9.3.2.1 Ambient

Location:	Integration Bay
Cleanliness:	Class 10,000
Temperature:	13 to 24°C
Humidity:	30 to 50%
Access:	Limited
Pressure:	Atmospheric

9.3.2.2 Thermal Vacuum

Location:	35' Thermal Vacuum Chamber
Cleanliness:	Class 10,000
Temperature:	(TBD–3) to (TBD–3)°C
Humidity:	N/A
Access:	Restricted, none while under vacuum
Pressure:	$<1 \times 10^{-5}$ Torr

9.3.3 Test Configuration

9.3.3.1 Ambient

Spacecraft:	Horizontal, –Z Up
Test Fixture:	Spacecraft in TAP
Test Equipment:	SCS

9.3.3.2 Thermal Vacuum

Spacecraft:	Horizontal, –Z Up
Test Fixture:	Spacecraft in METS
Test Equipment:	SCS

9.3.4 Test Description

This test is performed with all harnesses and connectors mated in their flight configuration. To the maximum extent possible, telemetry is used to evaluate performance. When this is not adequate, measurements are made via test connectors.

Tables XI through XVII summarize the primary measurements of each subsystem for the Comprehensive Performance Test.

Table XI. C&DH Subsystem Comprehensive Performance Test Measurements

Unit Under Test	Mode (incl side)	Tested Functions
C&DH S/S	All	Verify subsystem can be configured into each of its operational modes. Verify proper power consumption. Verify proper telemetry and proper response to commands. Verify proper initialization states.
CTIU	Science (A&B)	Command Receipt and Distribution, Telemetry Collection and Formatting (1 and 16 Kbps), Dump/Dwell, Bus Management, Time and Frequency Bus, SCC Monitoring, Hardline Telemetry
BDU (incl. H/K & Instr. BDUs)	Science (A&B)	C&T Bus Interaction, Command Processing, Load/Dump, Telemetry Sampling
SCC	Science (A&B)	Flight Software Functionality, Load/Dump, Command Processing, Telemetry Formatting, Self Checks, Time and Frequency Bus, Processor Performance Using Test Software
Telemetry Data Recorder	Science (A&B)	Command Response, Telemetry, Record and Playback Test Pattern (for each record rate)
Science Formatting Equipment	Science (A&B)	Command Response, Telemetry, Generation of Fill Data, Output at DAS Interface, Provide Data On Each Link For Recording on HRTR
High Rate Telemetry Recorder	Science (A&B)	Command Response, Telemetry, Record and Playback Test Pattern (for each record rate), Record Through Speed Changes

Table XII. COMM Subsystem Comprehensive Performance Test Measurements

Unit Under Test	Mode (incl side)	Tested Functions
MO	Science (A&B)	Stability

Table XII. COMM Subsystem Comprehensive Performance Test Measurements (Continued)

Unit Under Test	Mode (incl side)	Tested Functions
SBT	TDRS (A&B)	125, 1K and 10K bps Receive Rates, 1, 16 and 256 Kbps Telemetry Rates, Dump, Playback, Transmitter Power, Transmitter Frequency, Doppler Data Extraction, Ranging, Hardline Command, I:Q Power Ratio, Coherent Mode Frequency, Receiver Acquisition Threshold, Command Threshold
SBT	STDN (A&B)	2 Kbps Receive Rate, 1, 16, and 512 Kbps Telemetry Rates, Dump, Playback, Ranging
SBIU	N/A	Relay Commands
KSA Modulator	Science (A&B)	None. Operation verified by other component tests.
KSA Upconv	Science (A&B)	None. Operation verified by other component tests.
KSA Xmtr	Science (A&B)	Transmitter Power, Transmitter Frequency, Signal Lock
DAS Modulator	Science (A&B)	None. Operation verified by other component tests.
DAS Upconv	Science (A&B)	None. Operation verified by other component tests.
DAS Xmtr	DB (A&B)	Transmitter Power, Transmitter Frequency, Signal Lock, I:Q Power Ratio
DAS Xmtr	DDL (A&B)	Signal Lock
DAS Xmtr	DB/DDL (A&B)	Signal Lock, I:Q Power Ratio
DAS Xmtr	DP (A&B)	Signal Lock, I:Q Power Ratio
DAS Xmtr	DB/DP (A&B)	Signal Lock, I:Q Power Ratio
Waveguide Sw	N/A	Relay Commands

Table XIII. GN&C Subsystem Comprehensive Test Measurements

Unit Under Test	Mode (incl side)	Tested Functions
GN&C S/S	All	Verify Flight Software interaction.
RWA 1	Science Safe Mode	Command Response, Telemetry, Current Draw, Speed vs Torque, Rundown Time, Stiction, Phasing, Reaction Torque, Momentum Storage, Tachometer Output, Temperature Sensor
RWA 2	Science Safe Mode	Command Response, Telemetry, Current Draw, Speed vs Torque, Rundown Time, Stiction, Phasing, Reaction Torque, Momentum Storage, Tachometer Output, Temperature Sensor

Table XIII. GN&C Subsystem Comprehensive Test Measurements (Continued)

Unit Under Test	Mode (incl side)	Tested Functions
RWA 3	Science Safe Mode	Command Response, Telemetry, Current Draw, Speed vs Torque, Rundown Time, Stiction, Phasing, Reaction Torque, Momentum Storage, Tachometer Output, Temperature Sensor
RWA 4	Science Safe Mode	Command Response, Telemetry, Current Draw, Speed vs Torque, Rundown Time, Stiction, Phasing, Reaction Torque, Momentum Storage, Tachometer Output, Temperature Sensor
Magnetic Torquer Rods	Science (A&B) Safe Mode (A&B)	Generate magnetic field on command
PSU (SM)	Science (A&B)	Command response, fuses good, current flow through both sides, proper voltages
ACE	Science (A&B)	Command Response; Status Data; Mode Switching; RWA and Torquer Rod Commands; SCC I/F; ADE Status and Data; Separation Signals; ESA, CSS, FSS, TAM, IRU, and SSST Data Processing; ACE logic; Initialization
ACE	Safe Mode (A&B)	Command Response; Status Data; Safe Mode Entry and Exit; Drive Commands to RWA, Torquer Rods, Thrusters; SCC I/F; ADE Status and Data; ESA, CSS, FSS, TAM, IRU, SSST Data Processing; ACE Logic; Initialization
SSST 1	Science	Command Response, Status Data, Output Data, Sensitivity, Mode, Star Position, Current Draw, Temperature
SSST 2	Science	Command Response, Status Data, Output Data, Sensitivity, Mode, Star Position, Current Draw, Temperature
IRU	Science (A&B)	Command Response, Status Data, Output Data, Phasing, Position and Rate Data, Mode, Current Draw, Temperature, Cross–Coupling, Drift, Linearity
TAM 1	Science	Command Response, Status Data, Output Data, Field Data, Linearity, Saturation Level
TAM 2	Science	Command Response, Status Data, Output Data, Field Data, Linearity, Saturation Level
CSS (SM)	Science	Telemetry Data, Status Data Saturation Level
FSS	Science	Command response, telemetry data

Table XIII. GN&C Subsystem Comprehensive Test Measurements (Continued)

Unit Under Test	Mode (incl side)	Tested Functions
ESA 1	Science	Command response, telemetry data, current draw, phasing, sensitivity, FOV, Sun inhibit
ESA 2	Science	Command response, telemetry data, current draw, phasing, sensitivity, FOV, Sun inhibit

Table XIV. EPS Subsystem Comprehensive Test Measurements

S/S Unit Under Test	Mode (incl side)	Tested Functions
EPS S/S	All	Verify subsystem can be configured into each of its operational modes. Verify proper power consumption. Verify proper telemetry and proper response to commands. Verify proper initialization states.
PDU	All	Verify bus regulation for all modes and during mode transitions. Verify power distribution to all spacecraft loads. Verify battery constant charge rate. Verify battery V/T limiting function.
BPC	All	Verify battery charge and discharge functions
SSU	All	Verify shunting of excess solar array power.
Solar Array	All	To be tested as Solar Array Assembly
Battery	All	Verify battery discharge and charge capabilities. Verify pyro bus voltage.
EPC	N/A	None. Operation verified by other component tests.
PSU	N/A	None. Operation verified by other component tests.
ADE	Sides A&B	Verify ADE can supply drive to the SAD for all command states. Verify ADE can operate in safe mode configuration, either dive to index and hold or track sun closed loop using coarse sun sensor data.
FDB	All	Fuses good, power flows through both sides.

Table XV. Propulsion Subsystem Comprehensive Test Measurements

Unit Under Test	Mode (incl side)	Tested Functions
Propulsion S/S	All	Verify subsystem can be configured into each of its operational modes. Verify proper power consumption. Verify proper telemetry and proper response to commands. Verify proper initialization states.
PMEA	Standby (A&B) Science (A&B) Delta–V (A&B) Survival (A&B) Safe Mode (A&B)	Correct initialization and configuration Correct Command Response Correct Serial Status Telemetry Correct Response to Separation Signal Correct Safe Mode Entry and Exit
Latch Valve	Standby (A&B) Science (A&B) Delta–V (A&B) Survival (A&B) Safe Mode (A&B)	Correct Command Response Correct position telemetry
REAs	Standby (A&B) Science (A&B) Delta–V (A&B) Survival (A&B) Safe Mode (A&B)	Correct Command Response Correct status telemetry

Table XVI. Comprehensive Performance Test Measurements

Unit Under Test	Mode (incl side)	Tested Functions
TCS	All	Verify subsystem can be configured into each of its operational modes. Verify proper power consumption. Verify proper telemetry and proper response to commands. Verify proper initialization states.
HCE	All	Heaters powered from both sides, Command Response, Telemetry and status data.
CPHTS	Science	Pressure Switch, Command Response, Temperature/Heater Status Telemetry.

Table XVII. Electrical Accommodations Subsystem Comprehensive Test Measurements

Unit Under Test	Mode (incl side)	Tested Functions
PRA	All	Command Response, Telemetry

9.3.5 Test Criteria

(TBD–4)

9.3.6 Test Prerequisites

(TBD–5)

9.3.7 Guidelines/Constraints

COMS:

Any open receiver or transmitter port is properly terminated.

All component power is at 120V.

9.4 Aliveness Test

9.4.1 Purpose

The aliveness test is a subset of the Functional Test. It verifies the aliveness of redundant hardware in the subsystems. It demonstrates redundant power and signal paths to major subsystem components, but does not send every command. It verifies proper telemetry response in Standby Mode. No external stimuli is used as part of the test and it is used as a quick check when the environment does not permit a more extensive test. It is also used after the spacecraft is moved to a new facility.

9.4.2 Test Environment

Location:	35' T/V, Anechoic and Acoustic Chambers
Cleanliness:	Class 10,000
Temperature:	13 to 24°C
Humidity:	30 to 50%
Access:	Limited
Pressure:	Atmospheric

9.4.3 Test Configuration

Spacecraft:	Horizontal or Vertical
Test Fixture:	Spacecraft in METS, Anechoic Fixture, Acoustic Fixture
Test Equipment:	SCS

9.4.4 Test Description

Tables XVIII through XXIV summarize the primary measurements of each subsystem for the Aliveness Test.

Table XVIII. C&DH Subsystem Aliveness Test Measurements

Unit Under Test	Mode (incl side)	Tested Functions
CTIU	Science (A&B)	Command Receipt and Distribution, Telemetry Collection and Formatting (16 Kbps), Bus Management, Hardline Telemetry
BDU (incl. H/K & Instr. BDUs)	Science (A&B)	C&T Bus Interaction, Command Processing, Telemetry Sampling
SCC	Science (A&B)	Flight Software Functionality, Command Processing, Telemetry Formatting
Telemetry Data Recorder	Science (A&B)	Command Response, Telemetry
Science Formatting Equipment	Science (A&B)	Command Response, Telemetry
High Rate Telemetry Recorder	Science (A&B)	Command Response, Telemetry

Table XIX. COMM Subsystem Aliveness Test Measurements

Unit Under Test	Mode (incl side)	Tested Functions
SBT	(A&B)	Hardline Command, Telemetry Verification of Proper Transmitter Configuration for TDRSS and STDN
SBIU	N/A	Relay Commands
KSA Xmtr	Science (A&B)	Telemetry Verification of Proper Transmitter Configuration
DAS Xmtr	(A&B)	Telemetry Verification of Proper Transmitter Configuration
Waveguide Sw	N/A	Relay Commands

Table XX. GN&C Subsystem Aliveness Test Measurements

Unit Under Test	Mode (incl side)	Tested Functions
GN&C S/S	All	Verify subsystem can be configured into each of its operational modes. Verify proper power consumption. Verify proper telemetry and proper response to commands. Verify proper initialization states.
RWA 1	STDBY	Verify wheel can be powered and sends tach data, responds to speed change commands
RWA 2	STDBY	Verify wheel can be powered and sends tach data, responds to speed change commands

Table XX. GN&C Subsystem Aliveness Test Measurements (Continued)

Unit Under Test	Mode (incl side)	Tested Functions
RWA 3	STDBY	Verify wheel can be powered and sends tach data, responds to speed change commands
RWA 4	STDBY	Verify wheel can be powered and sends tach data, responds to speed change commands
Magnetic torquer rods	Safe Mode (A&B) Science (A&B)	Generate magnetic field on command
PSU	STDBY (A&B)	Command response, fuses good, current flow through both sides, proper voltages
ACE	Science (A&B)	Command response, telemetry data
SSST 1	Self–test	Command response, telemetry data, current draw
SSST 2	Self–test	Command response, telemetry data, current draw
IRU	STDBY (A&B)	Command response, telemetry data, current draw
TAM 1	STDBY	Command response, telemetry data, current draw
TAM 2	STDBY	Command response, telemetry data, current draw
CSS (SM)	STDBY	Telemetry data
FSS	STDBY	Command response, telemetry data
ESA 1	STDBY	Command response, telemetry data, current draw
ESA 2	STDBY	Command response, telemetry data, current draw

Table XXI. Aliveness Test Measurements

Unit Under Test	Mode (incl side)	Tested Functions
EPS S/S	All	Verify subsystem can be configured into each of its operational modes. Verify proper power consumption. Verify proper telemetry and proper response to commands. Verify proper initialization states.
PDU	All	Verify bus regulation for standby modes and during mode transitions. Verify power distribution to all spacecraft loads. Verify battery constant charge rate. Verify battery V/T limiting function.
BPC	All	Verify battery charge and discharge functions
SSU	All	Verify shunting of excess solar array power.
Solar Array	All	To be tested as Solar Array Assembly
Battery	All	Verify battery discharge and charge capabilities. Verify pyro bus voltage.

Table XXI. Aliveness Test Measurements (Continued)

Unit Under Test	Mode (incl side)	Tested Functions
FDB	All	Verify fuses are good and current will flow through both sides
EPC	All	None. Operation verified by other component tests.
PSU	All	None. Operation verified by other component tests.
ADE	Sides A&B	Verify ADE can be powered and provide telemetry.

Table XXII. Propulsion Subsystem Aliveness Test Measurements

Unit Under Test	Mode (incl side)	Tested Functions
Propulsion S/S	Standby	Verify subsystem can be configured into each of its operational modes. Verify proper power consumption. Verify proper telemetry and proper response to commands. Verify proper initialization states.
PMEA	Standby (A&B)	Correct initialization and configuration Correct Command Response Correct Serial Status Telemetry
Latch Valve	Standby (A&B)	Correct Command Response Correct position telemetry
REAs	Standby (A&B)	Correct Command Response Correct status telemetry

Table XXIII. Aliveness Test Measurements

Unit Under Test	Mode (incl side)	Tested Functions
HCE	All	Command Response, Telemetry
Temperature Sensors	All	Telemetry
CPHTS	Science	Pressure Switch, Command Response, Temperature/Heater Status Telemetry.

Table XXIV. Electrical Accommodations Subsystem Aliveness Test Measurements

Unit Under Test	Mode (incl side)	Tested Functions
PRA	All	Command Response, Telemetry

9.4.5 Test Criteria

(TBD–4)

9.4.6 Test Prerequisites

None

9.4.7 Guidelines/Constraints

COMM:

Any open receiver or transmitter port is properly terminated.

All component power is at 120V.

10 SYSTEM–LEVEL TESTING

10.1 Overview

System–level testing consists of a series of tests that verify the performance of each subsystem in combination with the other subsystems, the inter–system compatibility of the spacecraft, and the performance of the spacecraft in environments which simulate the expected conditions for the life cycle of the spacecraft.

Four basic types of tests are utilized during system level testing: functional verification, system characterization, performance, and aliveness. Description of these test categories can be found in Section 3.1.2.

The system level test plan is partitioned into the following classifications in accordance with the general purpose of the test:

Electrical system testing: Verifies flight software interfaces with all subsystems, quantifies spacecraft conducted emissions, and characterizes inter–system compatibility.

RF system testing: Quantifies spacecraft radiated emissions and verifies spacecraft RF self compatibility.

Thermal vacuum testing: Verifies the spacecraft's capability to meet performance specifications while subjected to nominal and worst case operating conditions.

Mechanical system testing: Verifies proper performance of appendages, confirms the capability of flight hardware to withstand shock and launch environments, and validates the integrity of system alignment throughout environmental testing.

Post environmental testing: Verifies no degradation of flight hardware has occurred during environmental testing, establishes end–to–end compatibility with the ground and space networks, and includes final magnetic and mass properties measurements.

10.2 Electrical System Testing

10.2.1 Flight Software Interface Verification

10.2.1.1 Purpose

This test verifies the flight software in the spacecraft environment. The test verifies flight software interfaces with flight hardware, operational modes, and failure detection, isolation and recovery (FDIR) functions.

10.2.1.2 Test Environment

Location:	Integration Bay
Cleanliness:	Class 10,000
Temperature:	13 to 24°C
Humidity:	30 to 50%
Access:	Limited
Pressure:	Atmospheric

10.2.1.3 Test Configuration

Spacecraft:	Horizontal (–Z Up) Test Fixture: TAP
Test Equipment:	SCS IGSE

10.2.1.4 Test Description

The test is performed with a complete, fully qualified, flight software build and the full up spacecraft. Software relating to each subsystem and instrument are verified for proper command and telemetry processing, execution, and spacecraft fault detection and response. Tests are performed using STOL test procedures, stored command sequences and special FSW table configurations for enhanced telemetry capabilities, as required. Spacecraft telemetry is the primary means of verification. Initial conditions and induced faults are simulated through both hardware and software techniques. Flight software interfaces (e.g., stored commands) verified during other spacecraft tests (e.g., simulated orbits) do not have to be verified during this test. The functions to be verified are listed in Tables XXV through XXXIV.

Table XXV. C&DH/FSW Interface Verification Test Measurements

Function	Description
Command Processing	Verifies command and memory data uplink process at the various uplink rates. Verifies real time and stored command distribution capabilities.
Telemetry Processing	Verifies nominal/contingency mode Spacecraft bus telemetry processing and contents.
Ancillary Data Support	Verifies generation and distribution of ancillary data.
SCC OK Signal	Verifies generation and proper processing of signal.
FDIR/TMON	Verifies FSW telemetry monitoring and response functions

Table XXVI. COMM/FSW Interface Verification Test Measurements

Function	Description
S–band Management	Verifies management of transmitter turn on/off.

Table XXVII. GN&C/FSW Interface Verification Test Measurements

Function	Description
HGA Control	Verifies proper gimbal angle determination and correct position command generation. Verifies avoidance of restricted RF emissions zones
Solar Array Drive Control	Verifies correct solar array position determination. Verifies autonomous rate control of solar array drive.
Attitude Control Interface	Verifies sensor and actuator command and telemetry interfaces.
Navigation	Verifies TONS interface.

Table XXVIII. EPS/FSW Interface Verification Test Measurements

Function	Description
Function	Description
Battery Management	Verifies battery telemetry monitoring and charge/discharge control.
Load Management	Verifies proper power load monitoring and shedding capabilities.

Table XXIX. TCS/FSW Interface Verification Test Measurements

Function	Description
Thermal Monitoring and Control	Verifies monitoring and control of TCS hardware.

Table XXX. ASTER/FSW Interface Verification Test Measurements

Mode	Description
(TBD–6)	(TBD–6)

Table XXXI. CERES/FSW Interface Verification Test Measurements

Mode	Description
(TBD–6)	(TBD–6)

Table XXXII. MISR/FSW Interface Verification Test Measurements

Mode	Description
(TBD–6)	(TBD–6)

Table XXXIII. MODIS/FSW Interface Verification Test Measurements

Mode	Description
(TBD–6)	(TBD–6)

Table XXXIV. MOPITT/FSW Interface Verification Test Measurements

Mode	Description
(TBD–6)	(TBD–6)

10.2.1.5 Test Criteria

(TBD–4)

10.2.1.6 Test Pre–Requisites

All testing of the flight software in the Flight Software Test Bed (FSTB) is completed and all hardware with interfaces to the flight software is integrated.

10.2.1.7 Guidelines/Constraints

(TBD–7)

10.2.2 Power Profile (Conducted Emissions) Test

10.2.2.1 Purpose

This test measures the magnitude of power transients and its effect on bus voltages to verify proper fuse sizing. It also quantifies bus voltage ripple and noise.

10.2.2.2 Test Environment

Location:	Integration Bay
Cleanliness:	Class 10,000
Temperature:	13 to 24°C
Humidity:	30 to 50%
Access:	Limited
Pressure:	Atmospheric

10.2.2.3 Test Configuration

Spacecraft:	Horizontal (–Z Up)
Test Fixture:	TAP
Test Equipment:	SCS
	IGSE
	Spectrum Analyzer
	Oscilloscope

10.2.2.4 Test Description

The Power Profile Test characterizes bus voltage noise, ripple, and transients. The test is performed in two phases. The first phase measures power bus characteristic during EM and instrument integration. The second phase measures the same characteristics with a fully integrated spacecraft.

Initial power bus characterization is performed as part of the electrical integration of the EM's and instruments to the structure. Measurements are made with an oscilloscope at a breakout box located between the assembly and the power interface. Details of the electrical integration operations are provided in the EM and instrument test plans and procedures.

Characterization of the fully integrated spacecraft is performed in the Launch, Science, and Noisy (electrical) configurations. Measurements are made with the spacecraft in the steady state configurations defined to support launch, to perform mission science operations and to create worst case noise conditions. Science mode testing includes measurements made during the switching of instruments through their primary mission operating modes. The tests are performed for both prime and redundant configurations. Frequency and time domain measurements are captured, using an oscilloscope and spectrum analyzer, at the Power Management and Distribution (PMAD) EM test connector. The measurements are repeated during thermal vacuum testing. Additional test information can be found in the EMC Test Plan PN20005869.

10.2.2.5 Test Criteria

(TBD–4)

10.2.2.6 Test Pre–Requisites

All hardware is electrically integrated.

10.2.2.7 Guidelines/Constraints

(TBD–7)

10.2.3 EMC (Transient Tolerance) Test

10.2.3.1 Purpose

This test verifies conducted emissions (noise/transients) self–compatibility while exercising the spacecraft through its subsystem/instrument operational modes.

10.2.3.2 Test Environment

Location:	Integration Bay
Cleanliness:	Class 10,000
Temperature:	13 to 24°C
Humidity:	30 to 50%
Access:	Limited
Pressure:	Atmospheric

10.2.3.3 Test Configuration

Spacecraft:	Horizontal (–Z Up)
Test Fixture:	TAP
Test Equipment:	SCS
	IGSE

10.2.3.4 Test Description

This test verifies that each subsystem is tolerant of the emissions conducted by the other subsystems. Subsystem inter–compatibility testing evaluates the effects of conducted emissions from a subsystem on the operation of the other subsystems. All subsystems and instruments are configured in their "quiet" or most susceptible mode. Sequentially each subsystem and instrument is exercised through its various operational modes to produce worst case conducted noise on the power bus. Telemetry is monitored to detect any unexpected perturbations. The test is performed for both the prime and redundant configurations. Some testing, relating to hardware whose worst case emissions occur in the thermal vacuum environment, is performed during thermal vacuum testing. Additional test information can be found in the EMC Test Plan PN20005869. Tables XXXV through XLV identify the operating modes to be exercised for each EM and instrument.

Table XXXV. C&DH Transient Tolerance Test Measurements

Mode	Description
(TBD–8)	(TBD–8)

Table XXXVI. COMM Transient Tolerance Test Measurements

Mode	Description
S–band Transponder Turn On	Characterizes turn on/off effects on other subsystems.
KSA Transmitter Turn On	Characterizes turn on/off effects on other subsystems.
DAS Transmitter Turn On	Characterizes turn on/off effects on other subsystems.

Table XXXVII. GN&C Transient Tolerance Test Measurements

Mode	Description
RWA Ramp Up/Down	Monitor power bus and Spacecraft performance during RWA ramp up/down.

Table XXXVIII. EPS Transient Tolerance Test Measurements

Mode	Description
Array Drive Electronics/ Solar Array Drive	Monitor power bus and Spacecraft performance during slew of solar array drive.
Battery Charging	Monitor power bus and Spacecraft performance during transition to battery charging.
Battery Discharging	Monitor power bus and Spacecraft performance during transition to battery discharging.
Shunt Mode	Monitor power bus and Spacecraft performance during transition to shunt mode operation.
Pyro Bus	Monitor power bus and Spacecraft performance during pyro firings.

Table XXXIX. Propulsion Transient Tolerance Test Measurements

Mode	Description
Latch Valve	Monitor power bus and Spacecraft performance during latch valve actuation.

Table XL. TCS Transient Tolerance Test Measurements

Mode	Description
HCE/Heaters	Monitor power bus and Spacecraft performance during heater turn on. Performed in T/V only.

Table XLI. ASTER Transient Tolerance Test Measurements

Mode	Description
(TBD–8)	(TBD–8)

Table XLII. CERES Transient Tolerance Test Measurements

Mode	Description
(TBD–8)	(TBD–8)

Table XLIII. MISR Transient Tolerance Test Measurements

Mode	Description
(TBD–8)	(TBD–8)

Table XLIV. MODIS Transient Tolerance Test Measurements

Mode	Description
(TBD–8)	(TBD–8)

Table XLV. MOPITT Transient Tolerance Test Measurements

Mode	Description
(TBD–8)	(TBD–8)

10.2.3.5 Test Criteria

(TBD–4)

10.2.3.6 Test Pre–Requisites

All hardware is electrically integrated.

10.2.3.7 Guidelines/Constraints

(TBD–7)

10.2.4 Orbital Mode Test

10.2.4.1 Purpose

This test demonstrates the self–compatibility of all spacecraft elements as well as the ability of all spacecraft elements to operate in nominal orbit mode.

10.2.4.2 Test Environment

Location:	Integration Bay
Cleanliness:	Class 10,000
Temperature:	13 to 24°C
Humidity:	30 to 50%
Access:	Limited
Pressure:	Atmospheric

10.2.4.3 Test Configuration

Spacecraft:	Horizontal (–Z Up)
Test Fixture:	TAP
Test Equipment:	SCS
	IGSE
	Spacecraft Cooling GSE
	TCPS

10.2.4.4 Test Description

This test consist of a series of simulated orbits designed to verify spacecraft self–compatibility. Additionally, the simulated orbits demonstrate spacecraft operability during mission–like operations. The Orbital Mode Test will be is the primary characterization test used throughout I&T.

All subsystems and instruments are operated concurrently to emulate, to the extent practical, the mission orbital timelines. Multiple orbits are performed to exercise spacecraft configurations representative of those used throughout the mission. The orbits incorporate verification of primary and redundant hardware, primary data and power configurations, and nominal spacecraft operations. Spacecraft telemetry is monitored realtime, and subsequently reviewed, to verify compatibility between subsystems and instruments. Significant activities for subsystems and instruments are observed. These activities include: instrument science operations, science and housekeeping telemetry processing, data storage and playback, RF transmitter duty cycling, HGA and solar array tracking, and battery charge management. Figure 19 illustrates the simulated orbit timeline.

Results of the simulated orbits are used to evaluate the ability of the spacecraft to perform the intended mission operations. Spacecraft activities are monitored to verify proper response, sequencing, and timing. Orbital data are utilized, during end–to–end testing, to verify ground and space network compatibility. Simulated orbit testing occurs during spacecraft compatibility, end–to–end compatibility, and thermal vacuum testing

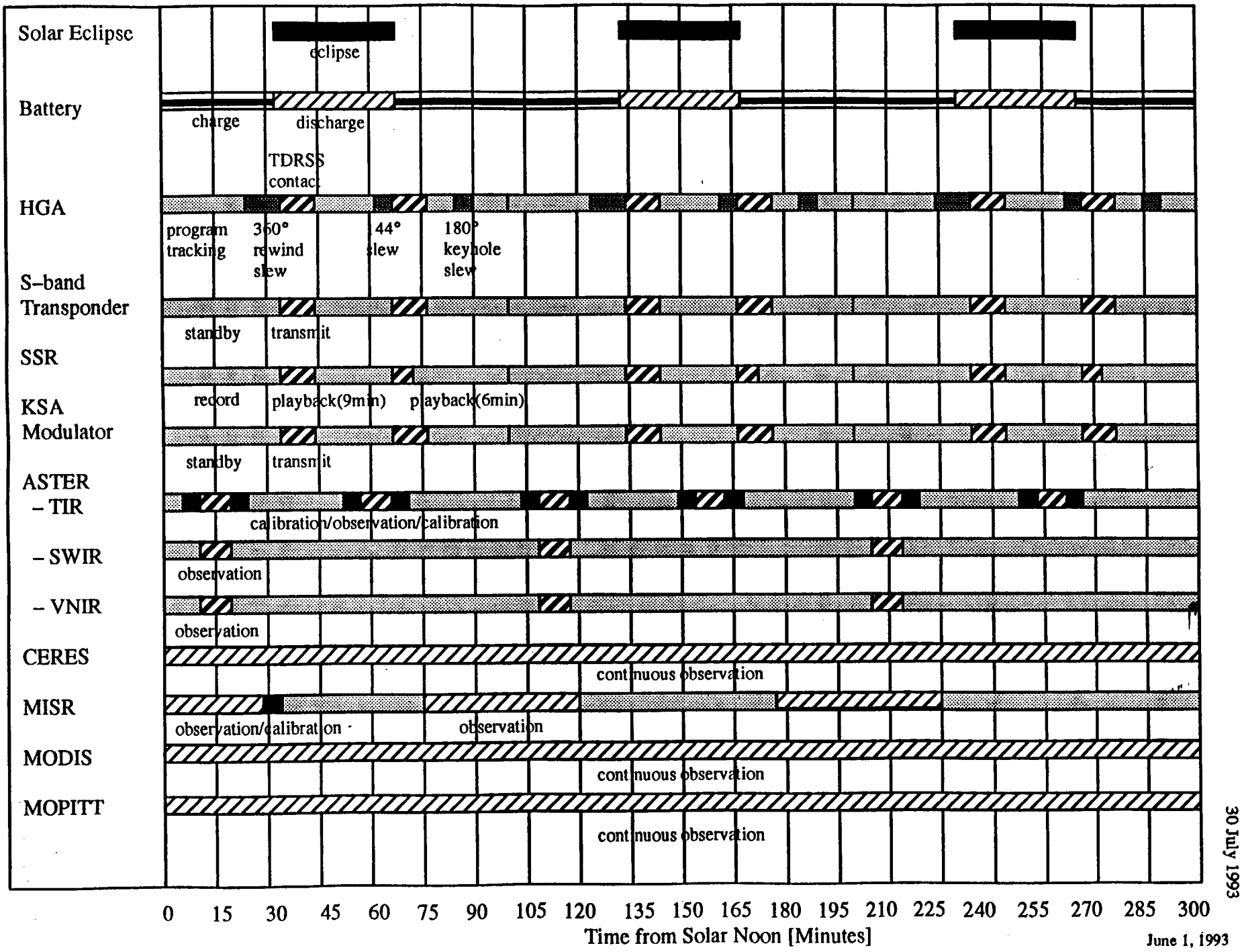

Figure 19. Orbit Mode Test Timeline

10.2.4.5 Test Criteria

(TBD–4)

10.2.4.6 Test Pre–Requisites

(TBD–5)

10.2.4.7 Guidelines/Constraints

(TBD–7)

10.2.5 Spacecraft–to–Network Compatibility Tests

10.2.5.1 Purpose

This test verifies the RF interface compatibility between the spacecraft and the SN and GN.

10.2.5.2 Test Environment

Location:	Integration Bay
Cleanliness:	Class 10,000
Temperature:	13 to 24°C
Humidity:	30 to 50%
Access:	Limited
Pressure:	Atmospheric

10.2.5.3 Test Configuration

Spacecraft:	Horizontal (–Z Up)
Test Fixture:	TAP
Test Equipment:	SCS
	IGSE
	NASA Compatibility Test Van
Test Support	TDRSS
	EOC

10.2.5.4 Test Description

This test evaluates the RF interfaces between the spacecraft and the ground and space networks. Testing will be performed in three phases: the first phase verifies compatibility between the EOS Operations Center (EOC) and the spacecraft, the second phase characterizes the spacecraft, SN, and GN RF interfaces, and the third phase demonstrates Spacecraft compatibility with the space network.

EOC compatibility testing demonstrates, with the spacecraft, the spacecraft commanding and telemetry processing capabilities of the EOC. All command, telemetry, recorder playback and SCC load/dump functions are verified to the extent practical. Command and telemetry traffic between the spacecraft and the EOC is hardline via the ECOM network. EOC command and data flow testing occurs during selected tests throughout the I&T cycle (see Figure 5).

The CTV is utilized to evaluate the Spacecraft RF interfaces to the space and ground networks. All ground network RF interfaces, as well as the TDRS forward and return signals, are characterized by the CTV. The Spacecraft K–band signal is relayed via the CTV to WSC for characterization. RF interfaces are validated prior to space network compatibility testing to minimize TDRS usage.

After successful validation of the RF interfaces, the spacecraft signal is relayed to WSC via the TDRS. WSC personnel will demonstrate the ability to lock–on and to process the signal. WSC evaluates the spacecraft signal for each link mode. Spacecraft data is flowed to the EOC if the required SN elements are available.

10.2.5.5 Test Criteria

(TBD–4)

10.2.5.6 Test Pre–Requisites

The flight command database shall be verified prior to performing the spacecraft to network compatibility tests. All commands are transmitted from the EOC, via ECOM, to Astro; commands are captured by the SCS and compared to the I&T command data base.

10.2.5.7 Guidelines/Constraints

(TBD–7)

10.3 RF System Testing

10.3.1 EMC (Radiated Emissions) Test

10.3.1.1 Purpose

This test measures the worst case narrowband and broadband electric fields, unrelated to the transmitters, emanating from the spacecraft.

10.3.1.2 Test Environment

Location:	Integration Bay
Cleanliness:	Class 10,000
Temperature:	13 to 24°C
Humidity:	30 to 50%
Access:	Limited
Pressure:	Atmospheric

10.3.1.3 Test Configuration

Spacecraft:	Horizontal (–Z Up)
Test Fixture:	TAP
Test Equipment:	SCS
	IGSE
	EMC Measurement Equipment
	TCPS

10.3.1.4 Test Description

This test characterizes the spacecraft's radiated emissions with the transmitters turned off. Radiation surveys are performed with the spacecraft configured in Launch, Science, and RF Noisy modes (see Appendix I). Findings from the Launch mode survey verify the spacecraft meets the launch vehicle requirements. Results from the Science survey verify the Spacecraft meets the performance requirements, established in the EMC Control Plan (PN20005869), during simulated mission orbits. The RF Noisy mode survey measures worst case emissions with all subsystems and instruments simultaneously in their "noisy" modes.

The test is performed with the spacecraft controlled via RF command and telemetry links. All external cables and test equipment, in the immediate vicinity of the spacecraft, are shielded to minimize the emissions induced by the test environment. A background survey is performed to determine placement of test antennas at points of maximum emissions. A minimum of four test locations are used. Emissions are characterized for each mode using a combination RF probes, antennas and RF analyzers. Testing verifies both primary and redundant configurations. Detailed test information is provided in the EMC Test Plan PN20005869.

10.3.1.5 Test Criteria

(TBD–4)

10.3.1.6 Test Pre–Requisites

All hardware is electrically mated in its flight configuration.

10.3.1.7 Guidelines/Constraints

(TBD–7)

10.3.2 RF Compatibility Test

10.3.2.1 Purpose

This test verifies the spacecraft operates properly in the presence of radiated emissions produced by the spacecraft.

10.3.2.2 Test Environment

Location:	Bay 8
Cleanliness:	Class 10,000 (using spacecraft enclosure)
Temperature:	15 to 30°C
Humidity:	30 to 60%
Access:	Restricted
Pressure:	Atmospheric

10.3.2.3 Test Configuration

Spacecraft:	Horizontal –Z Up (in enclosure)
Test Fixture:	Acoustic Test Fixture
Test Equipment:	SCS IGSE EMC Measurement Equipment TCPS

10.3.2.4 Test Description

The RF compatibility test verifies that the spacecraft operates properly in the presence of radiated emissions produced by the spacecraft's transmitters, subsystems, and instruments. The first part of the test compares the performance of the command receiver during selected quiet, nominal, and worst case combinations of subsystem, instrument and transmitter operating modes. The second part evaluates the effects of spacecraft transmitter operations on subsystem and instrument performance, and radiated emissions. Table XLVI summarizes the tests performed during the test.

Table XLVI. RF Compatibility Test

Test	Subsystem/Instrument Mode	Transmitter State (S–band, K–band, DAS)
Receiver Performance	Quiet	All Off
Receiver Performance	Nominal	All Off
Receiver Performance	Noisy	All On
Spacecraft XMTR Self–Compatibility	Quiet	All On
Radiated Emissions	Nominal	All On

Receiver performance testing measures command receiver loss–of–lock, acquisition threshold and command threshold levels. Command receiver testing incrementally decreases the ground radiated power levels to measure and verify receiver loss–of–lock. Acquisition threshold testing incrementally increases the radiated power levels to measure and verify the threshold for acquiring receiver lock. Command threshold testing sends sets of commands to the spacecraft while incrementally decreasing radiated power levels to measure and verify the threshold for execution of commands. The tests are repeated for the various transmitter and subsystem configurations listed in Table XLVI. Testing encompasses both primary and redundant configurations and verifies both GSTDN and TDRSS receiver modes.

During spacecraft transmitter self–compatibility testing, the transmitters are operating with the subsystems and instruments configured in their quiet modes (see Appendix I). Telemetry is monitored, and subsequently reviewed, to determine if any perturbations were induced by the transmitters.

Finally, the subsystems and instruments are configured into their nominal orbit mode. Transmitters are turned on and the radiated emissions measurements (as described in Section 10.3.1 EMC Test) are repeated. Detailed test information is provided in the EMC Test Plan PN20005869.

10.3.2.5 Test Criteria

(TBD–4)

10.3.2.6 Test Pre–Requisites

C&DH:

The flight omni and DAS antennas are installed in their flight configuration.

10.3.2.7 Guidelines/Constraints

This test involves radiating RF energy from the various spacecraft antennas. This energy represents a serious personnel hazard. Proper precautions are observed.

10.4 Thermal Vacuum Testing

Thermal vacuum testing consists of a series of tests that verify electrical and thermal performance of the spacecraft in a simulated orbital environment. Thermal Balance testing has been incorporated into the Thermal Vacuum Test in order to reduce overall cost and risk of environmental testing. Figure 20 depicts the Spacecraft Thermal Vacuum Test profile. The primary objectives of the tests are to:

a. Verify capability of Spacecraft to meet performance requirements while subjected to nominal and worst case T/V operating conditions

b. Validate ability of the thermal control subsystem to maintain the required temperatures and gradient limits

c. Confirm accuracy of Spacecraft analytical thermal models and mission temperature predicts

d. Verify functionality of hardware requiring vacuum environment

e. Provide baseline data for validation of flight telemetry measurements

f. Demonstrates system compatibility

Testing is partitioned into the following test phases:

Trial Pump Down: Verifies operation of chamber and ground support equipment prior to installation of spacecraft. It also provides for bakeout of chamber and GSE.

Pre–Pump Down: Verifies spacecraft and GSE is operating properly prior to chamber closure.

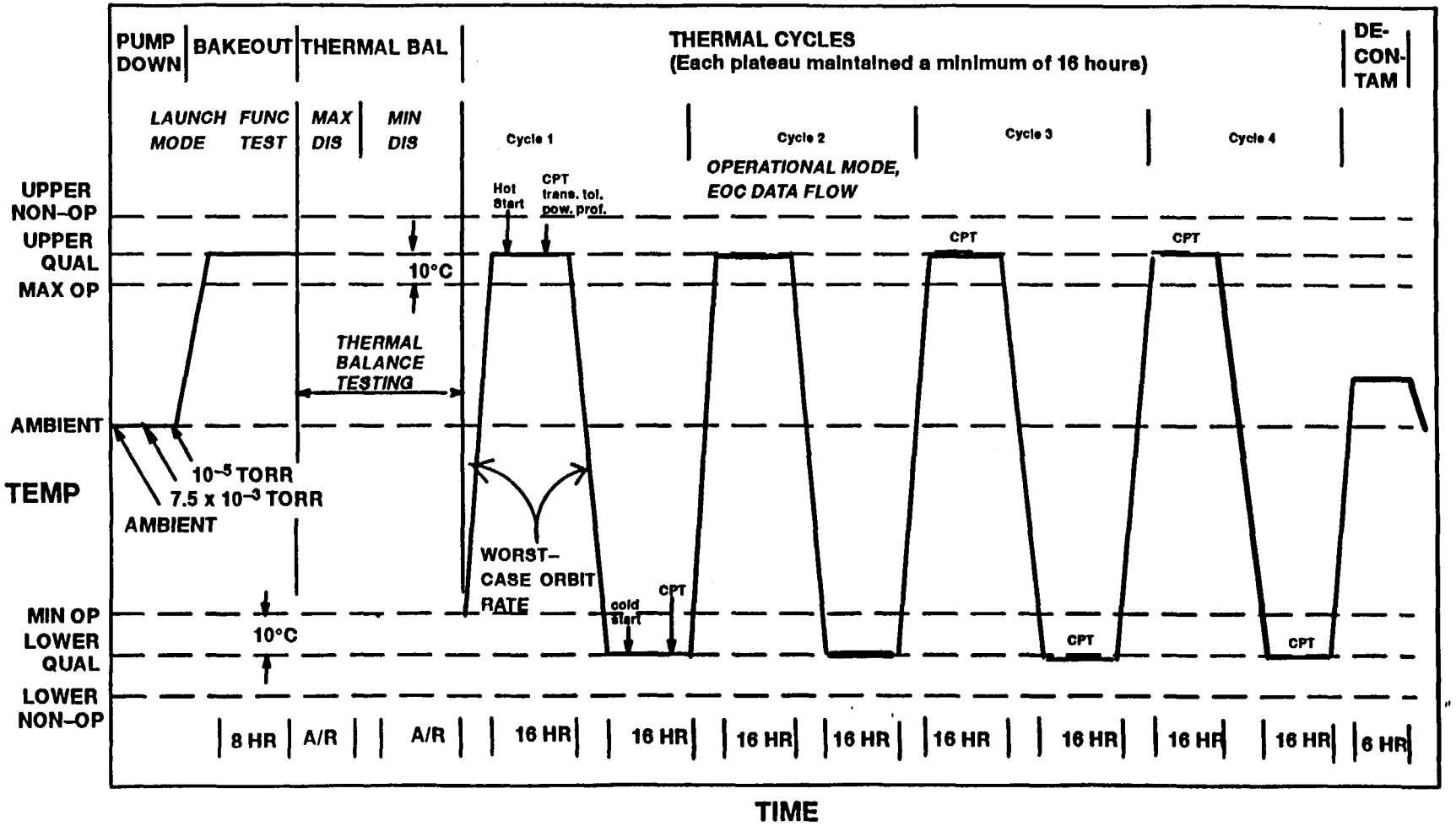

Figure 20. Spacecraft Thermal–Vacuum Test Profile

Bakeout: Provides time for outgassing of contaminants from spacecraft.

Launch Mode (Pump Down): Verifies spacecraft performance, while in launch configuration, during transition from ambient pressure to predicted on orbit pressure.

Thermal Balance: Verifies thermal control subsystem performance and validates analytical thermal models.

Vacuum (Thermal Cycling) Test: Verifies the capability of the spacecraft to meet performance requirements while exposed to worst case orbital T/V conditions.

Post Ventback: Verifies no degradation has occurred to the spacecraft due to the thermal vacuum exposure.

10.4.1 Trial Pump Down Test

10.4.1.1 Purpose

This test verifies the operation of the chamber and test support equipment prior to the installation of the spacecraft into the chamber. It also verifies cleanliness of the vacuum chamber and support equipment by bake–out prior to testing with flight hardware.

10.4.1.2 Test Environment

Location:	35' Thermal Vacuum Chamber
Cleanliness:	Class 10,000
Temperature:	**(TBD–3)** to **(TBD–3)°C**
Humidity:	N/A
Access:	Restricted (none while under vacuum)
Pressure:	$<1x10^{-5}$ Torr

10.4.1.3 Test Configuration

Spacecraft:	N/A
Test Fixture:	METS
Test Equipment:	TBD
	Contamination Monitor
	Thermocouples (incl. monitoring equipment)
	Supplemental heaters (incl. controllers/power supplies)
	Supplemental insulation
	Contamination monitor

All GSE to be used during actual thermal vacuum test is positioned in the chamber in the same configuration as expected for the test, to the extent practical.

10.4.1.4 Test Description

This test is performed prior to the installation of the spacecraft into the thermal vacuum chamber. Proper installation and operation of the cables, fluid lines, fixtures, targets, heater controls and monitoring devices used in the chamber are verified to the extent practical. Chamber pressure and

liquid nitrogen shroud performance are also evaluated. Chamber zones, utilized during the spacecraft test, are installed to characterize zone temperature control. Witness plates and TQCMs are used to monitor contaminant quantities and types.

10.4.1.5 Test Criteria

(TBD–4)

10.4.1.6 Test Pre–Requisites

(TBD–5)

10.4.1.7 Guidelines/Constraints

It is assumed that the configuration of the thermal vacuum chamber does not change between this test and the spacecraft thermal vacuum test.

Personnel working in the thermal vacuum chamber must take proper precautions to ensure that an environment capable of supporting life exists prior to entering the chamber.

10.4.2 Pre–pump Down Test

10.4.2.1 Purpose

This test verifies the operation of the spacecraft subsystems and supporting GSE in the thermal vacuum chamber prior to the initiation of thermal vacuum testing.

10.4.2.2 Test Environment

Location:	35' Thermal Vacuum Chamber
Cleanliness:	Class 10,000
Temperature:	13 to 24°C
Humidity:	30 to 50%
Access:	Restricted
Pressure:	Atmospheric

10.4.2.3 Test Configuration

Spacecraft:	Horizontal (–Z Up)
Test Fixture:	METS (Spacecraft)
	HGA Fixture (supports HGA and allows gimbal rotation)
	SSU Bench
Test Equipment:	SCS
	IGSE

10.4.2.4 Test Description

This test validates the thermal vacuum test configuration before chamber closure and the start of pumpdown. An Aliveness Test (Section 9.4) is performed to verify operation of the spacecraft subsystems and GSE interfaces. Special purpose tests are performed to demonstrate unverified GSE electrical interfaces, thermal control and monitoring hardware, and target support equipment.

10.4.2.5 Test Criteria

(TBD–4)

10.4.2.6 Test Pre–Requisites

(TBD–5)

10.4.2.7 Guidelines/Constraints

Personnel working in the thermal vacuum chamber must take proper precautions to ensure that an environment capable of supporting life exists prior to entering the chamber.

Any changes to the equipment configuration after the test must be verified prior to the start of the thermal vacuum testing.

10.4.3 Launch Mode (Pump Down) Test

10.4.3.1 Purpose

This test verifies proper operation of the spacecraft, while in the launch configuration, during chamber pressure evacuation to simulate transition from ambient to the on orbit environment.

10.4.3.2 Test Environment

Location:	35' Thermal Vacuum Chamber
Cleanliness:	Class 10,000
Temperature:	(TBD–3) to (TBD–3)°C
Humidity:	N/A
Access:	Restricted (none while under vacuum)
Pressure:	$<1 \times 10^{-5}$ Torr

10.4.3.3 Test Configuration

Spacecraft:	Horizontal (–Z Up)
Test Fixture:	METS
Test Equipment:	SCS
	Thermocouples (incl. monitoring equipment)
	Supplemental heaters (incl. controllers/power supplies)
	Supplemental insulation
	Contamination monitor

10.4.3.4 Test Description

The spacecraft subsystems are configured for launch (instruments are off). The chamber is evacuated to less than 7.5×10^{-3} Torr to simulate the pressure profile of the ELV–powered flight within the constraints of the chamber facility. During the transition, bus voltage and current are

monitored for abnormal variations. Spacecraft telemetry is monitored to evaluate launch mode activities. Provided that no bus anomalies are detected, the chamber is evacuated to a pressure of less than $1x10^{-5}$ Torr and maintained for the duration of T/V testing.

10.4.3.5 Test Criteria

(TBD–4)

10.4.3.6 Test Pre–Requisites

(TBD–5)

10.4.3.7 Guidelines/Constraints

(TBD–7)

10.4.4 Bakeout

10.4.4.1 Purpose

This activity provides for outgassing of the spacecraft structure and components.

10.4.4.2 Test Environment

Location:	35' Thermal Vacuum Chamber
Cleanliness:	Class 10,000
Temperature:	**(TBD–3)** to **(TBD–3)**°C
Humidity:	N/A
Access:	None
Pressure:	$<1x10^{-5}$ Torr

10.4.4.3 Test Configuration

Spacecraft:	Horizontal (–Z Up)
Test Fixture:	METS
Test Equipment:	SCS
	IGSE
	Thermocouples (incl. monitoring equipment)
	Supplemental heaters (incl. controllers/power supplies)
	Supplemental insulation
	Contamination monitor

10.4.4.4 Test Description

The spacecraft is heated using both internal (component) and external (shroud) heat sources. It is heated to temperatures which are sufficient to foster contaminant release but which do not exceed the upper qualification temperature. The bakeout conditions are maintained until contaminant

release has ceased or for a minimum duration of eight hours. Molecular contamination within the chamber is monitored with a Temperature–controlled Quartz Crystal Microbalance (TQCM) during T/V testing. During the bakeout process, thermal control of the chamber shrouds are used as required to maintain all flight hardware within its qualification temperature limits. A functional test are performed during bakeout to provide early verification that the spacecraft and GSE are operational in the thermal vacuum environment.

10.4.4.5 Test Criteria

(TBD–4)

10.4.4.6 Test Pre–Requisites

(TBD–5)

10.4.4.7 Guidelines/Constraints

(TBD–7)

10.4.5 Thermal Balance Test

10.4.5.1 Purpose

This test confirms the accuracy of the spacecraft analytical thermal models and the ability of the thermal control system to maintain the required temperatures and gradient limits with margin.

10.4.5.2 Test Environment

Location:	35' Thermal Vacuum Chamber
Cleanliness:	Class 10,000
Temperature:	(TBD–3) to (TBD–3)°C
Humidity:	N/A
Access:	None
Pressure:	$<1x10^{-5}$ Torr

10.4.5.3 Test Configuration

Spacecraft:	Horizontal (–Z Up)
Test Fixture:	METS
Test Equipment:	SCS
	IGSE
	Thermocouples (incl. monitoring equipment)
	Supplemental heaters (incl. controllers/power supplies)
	Supplemental insulation
	Contamination monitor

10.4.5.4 Test Description

After completing bakeout, the thermal balance test begins by adjusting the T/V chamber temperature and reconfiguring the spacecraft in order to simulate the worst–case hot scenario. Spacecraft temperatures are monitored to ensure no temperature exceeds the maximum allowable temperature limit for that location. This scenario requires simulation of the maximum external absorbed flux in combination with the maximum internal power dissipation predicted during the normal spacecraft operational profile. These conditions are maintained until the spacecraft reaches temperature stabilization and for a minimum of eight hours afterward. Temperature readings throughout the spacecraft and heater currents are closely monitored and recorded for post–test correlation of the thermal analytical model.

After simulating the worst–case hot scenario, the nominal scenario is simulated by lowering the chamber temperature and reconfiguring the spacecraft again. The worst–case cold nominal scenario requires simulation of the nominal external absorbed flux in combination with the nominal internal power dissipation predicted during the normal spacecraft operational profile. These conditions are maintained until the spacecraft reaches temperature stabilization and for a minimum of eight hours afterward. Temperature readings throughout the spacecraft and heater currents are monitored and recorded for post–test correlation of the thermal analytical model.

After simulating the nominal scenario, the worst–case cold scenario is simulated by lowering the chamber temperature and reconfiguring the spacecraft again. The worst–case cold scenario requires simulation of the minimum external absorbed flux in combination with the minimum internal power dissipation predicted during the normal spacecraft operational profile. These conditions are maintained until the spacecraft reaches temperature stabilization and for a minimum of eight hours afterward. Temperature readings throughout the spacecraft and heater currents are monitored and recorded for post–test correlation of the thermal analytical model.

10.4.5.5 Test Criteria

(TBD–4)

10.4.5.6 Test Pre–Requisites

(TBD–5)

10.4.5.7 Guidelines/Constraints

(TBD–7)

10.4.6 Vacuum (Thermal Cycling) Test

10.4.6.1 Purpose

Thermal Vacuum testing verifies the capability of the spacecraft to meet performance specification requirements while exposed to nominal and worst–case orbital T/V conditions.

10.4.6.2 Test Environment

Location:	35' Thermal Vacuum Chamber
Cleanliness:	Class 10,000
Temperature:	(TBD–3) to (TBD–3)°C
Humidity:	N/A
Access:	None
Pressure:	$<1x10^{-5}$ Torr

10.4.6.3 Test Configuration

Spacecraft:	Horizontal (–Z Up)
Test Fixture:	METS
Test Equipment:	SCS
	IGSE
	Thermocouples (incl. monitoring equipment)
	Supplemental heaters (incl. controllers/power supplies)
	Supplemental insulation
	Contamination monitor

10.4.6.4 Test Description

Vacuum testing consists of four thermal cycles during which spacecraft performance will be evaluated. During hot plateau testing, the chamber will be controlled such that the hottest component is maintained at 10°C above its maximum predicted on–orbit operating temperature. During cold plateau testing, the chamber will be controlled such that the coldest component is maintained at 10°C below its maximum predicted on–orbit operating temperature. Under no condition shall any component be permitted to reach a temperature which is outside its non–operating limits. The spacecraft thermal vacuum test profile is defined in Figure 20.

Spacecraft temperature transitions are induced by changes in chamber temperatures. The spacecraft temperature transition rate is the "worst case" expected on–orbit rate (10°C per hour) to the extent practical. Orbital simulations (see Section 10.2.4) are performed during all transitions and also during temperature plateaus when no other testing is scheduled.

During T/V cycling, a portion of the CPT (see Section 9.3) is performed during each cycle's high and low plateaus. On a cumulative basis, one full CPT is performed at the high temperature level, and one full CPT at the low temperature level. High and low temperature plateaus are maintained for at least 16 hours.

The following sequence is employed for spacecraft thermal cycling in T/V:

a. **Cycle 1, High Temperature** – After temperature stabilization has been achieved at the upper qualification temperature, the spacecraft is turned off (essential Spacecraft hardware will remain powered). Hot start capability is demonstrated two successive times. Applicable sections of the Transient Tolerance (Section 10.2.3) and Power Profile (Section 10.2.2) tests will be performed. A portion of the CPT is performed in order to ensure that the spacecraft is functioning properly.

b. **Cycle 1, Low Temperature** – After temperature stabilization has been achieved at the lower qualification temperature, the spacecraft is turned off (essential Spacecraft hardware will remain powered). Cold start capability is demonstrated two successive times. Cold–start capability is verified by performing a shutdown, waiting for a period of 30 minutes, and then performing a restart. During the shutdown, the Spacecraft is configured in its "survival" mode and test heaters and shroud control is used in order to prevent exposure to temperatures significantly below the lower qualification temperature. A portion of the CPT is performed in order to ensure that the spacecraft is functioning properly.

c. **Cycle 2, High and Low Temperatures** – Simulated orbits are performed during which EOC data flow testing occurs. During this testing, the EOC receives and processes telemetry from the spacecraft through the NASCOM link.

d. **Cycle 3, High and Low Temperatures** – CPT testing occurs.

e. **Cycle 4, High and Low Temperatures** – CPT testing occurs.

Following the fourth cycle, a contamination prevention half–cycle is performed in which the spacecraft's sensitive external surfaces are stabilized at temperatures within their operating ranges that minimize contamination. The spacecraft temperature is controlled such that contaminants are attracted to the colder chamber walls rather than the spacecraft. During this cycle the spacecraft is configured to a mode safe for transition to ambient pressure.

10.4.6.5 Test Criteria

(TBD–4)

10.4.6.6 Test Pre–Requisites

(TBD–5)

10.4.6.7 Guidelines/Constraints

(TBD–7)

10.4.7 Post–ventback Test

10.4.7.1 Purpose

This test verifies proper operation of the spacecraft subsystems in the thermal vacuum chamber at the conclusion of thermal vacuum testing.

10.4.7.2 Test Environment

Location:	35' Thermal Vacuum Chamber
Cleanliness:	Class 10,000
Temperature:	13 to 24°C
Humidity:	30 to 50%
Access:	Restricted
Pressure:	Atmospheric

10.4.7.3 Test Configuration

Spacecraft:	Horizontal (–Z Up)
Test Fixture:	METS
Test Equipment:	SCS
	IGSE

10.4.7.4 Test Description

Upon entering the chamber following ventback, witness plates are removed for analysis of contaminant composition and quantity. An in–place inspection of the spacecraft is performed to verify no physical damage has occurred during the thermal vacuum test. An aliveness test is performed to verify all subsystems are functional and that no degradation has occurred during the ventback process.

10.4.7.5 Test Criteria

(TBD–4)

10.4.7.6 Test Pre–Requisites

(TBD–5)

10.4.7.7 Guidelines/Constraints

Personnel working in the thermal vacuum chamber take proper precautions to ensure that an environment capable of supporting life exists prior to entering the chamber.

10.5 Mechanical System Testing

10.5.1 Pre– and Post–mechanical System Alignment Test

10.5.1.1 Purpose

The pre– and post–mechanical system alignment test measurements verify that each required sensor, instrument, HGA, S/A, and propulsion subsystem component is aligned to the Spacecraft navigation base coordinate system within the tolerance specified in the Spacecraft Alignment Plan, PN20008660. The alignment measurements are performed before and after the Spacecraft exposure to acoustic and shock environments to determine if any shift has occurred that exceeds the budget allowance.

10.5.1.2 Test Environment

Location:	Integration Bay
Cleanliness:	Class 10,000
Temperature:	13 to 24°C
Humidity:	30 to 50%
Access:	Limited
Pressure:	Atmospheric

10.5.1.3 Test Configuration

Spacecraft:	Vertical
Test Fixture:	Rotab (Spacecraft on rotab adaptor)
Test Equipment:	Alignment Equipment

10.5.1.4 Test Description

Alignments have been previously verified and a baseline established during structure testing and the integration phase of I&T. Measurements are made at the beginning of the mechanical system test phase and at the conclusion in order to evaluate the effects of acoustics, pyrotechnically induced shock and handling on the spacecraft. The Spacecraft is vertically positioned (+X axis up) on a precision rotary table for these alignment measurements.

10.5.1.5 Test Criteria

(TBD–4)

10.5.1.6 Test Pre–Requisites

(TBD–5)

10.5.1.7 Guidelines/Constraints

(TBD–7)

10.5.2 Deployment Verification Test

10.5.2.1 Purpose

Deployment testing is performed to verify proper installation of deployables, to confirm the deployment mechanisms operate as designed, and to verify there is no degradation in operation due to environmental exposures.

10.5.2.2 Test Environment

Location:	Integration Bay
Cleanliness:	Class 10,000
Temperature:	13 to 24°C
Humidity:	30 to 50%
Access:	Limited
Pressure:	Atmospheric

10.5.2.3 Test Configuration

Spacecraft:	Horizontal, TBD Up
Test Fixture:	TAP
Test Equipment:	HGA Deployment Fixture
	S/A Hinge Deployment Fixture
	S/A Blanket Box Pop and Catch Fixture
	Deployment Table

10.5.2.4 Test Description

a. **Solar Array Deployment**: Prior to Spacecraft acoustic testing, the S/A is installed in its flight configuration. The Spacecraft will be positioned in a vertical configuration (+X up) on the TAP. The S/A blanket box and canister will be supported from above using specially designed fixtures to simulate zero–g conditions. The S/A canister hinge deployment is performed by pneumatically actuating the release. The deployment of the canister is timed and the deployment angle measured and aligned if necessary. The canister hinge heater and latch microswitch operation are verified. The next part of this test involves the blanket box deployment. The S/A blanket box pop and catch fixture are installed on the S/A and the S/A blanket are deployed via Spacecraft commands to show first motion (approx. 2 in.). At the completion of this testing, the S/A is restowed on the Spacecraft in flight configuration for the acoustic test. This test is repeated after the acoustic test using pyrotechnics to actuate the release.

b. **HGA Boom Deployment**: Prior to acoustic testing, the HGA Deployment Assembly is installed in its flight configuration. The Spacecraft is positioned and aligned to the deployment table using the TAP. The HGA RF electronics box is supported by specially designed fixtures, to simulate zero–g conditions, which ride across the deployment table on air bearings. The HGA boom deployment is deployed by pneumatically actuating the four electronics box release mechanisms. The deployment of the boom is timed and the deployment angle measured and aligned if necessary. The boom hinge heater and latch microswitch operation are verified. At the completion of this test the HGA boom is restowed on the Spacecraft in flight configuration for the acoustic test. This test is repeated after the acoustic test using pyrotechnics to actuate the release mechanisms.

10.5.2.5 Test Criteria

The deployments occur when the deploy command is transmitted within the times described by specification.

The deployments take place in a controlled, repeatable manner to the extent possible taking into account fixture and facility constraints.

The post–deployment alignment of the HGA and the S/A canister must be within the specified range.

10.5.2.6 Test Pre–Requisites

The HGA and S/A must be installed in their launch configurations.

10.5.2.7 Guidelines/Constraints

(TBD–7)

10.5.3 Acoustic Test

10.5.3.1 Purpose

This test demonstrates the ability of the spacecraft to withstand and operate in the launch and ascent dynamic environment.

10.5.3.2 Test Environment

Location:	Acoustic Chamber
Cleanliness:	Class 100,000 (controlled to Class 10,000)
Temperature:	13 to 24°C
Humidity:	30 to 50%
Access:	Limited (none during test)
Pressure:	Atmospheric

10.5.3.3 Test Configuration

Spacecraft:	Vertical, with flight adaptor ring
Test Fixture:	Acoustic Test Fixture
Test Equipment:	Accelerometers (incl. data acquisition equipment)
	SCS
	IGSE
	Data Central

10.5.3.4 Test Description

The acoustic test of the EOS–AM Spacecraft is conducted in the Acoustic Chamber at the Astro Space East Windsor facility. Before the Spacecraft is installed in the chamber, the spectrum of the acoustic field in the test chamber is preshaped. The Spacecraft is moved into the facility and set–up vertically with test accelerometers installed. Prior to acoustic exposure, an aliveness test is performed with the Spacecraft set up in the acoustic chamber. After the aliveness test, the Spacecraft is placed in its launch mode per Appendix I and remains in this configuration during the acoustic exposure. A low–level acoustic test is performed to make final adjustments to the shape of the acoustic spectrum. The Spacecraft is then be subjected to the qualification test levels specified in Table XLVII for a protoflight duration. During exposure to the acoustic environment, telemetry is monitored for anomalous conditions and unexpected changes. A sniff test will be performed upon entering the test chamber following the test to verify no leaks in the CPHTS were induced. After acoustic exposure, an aliveness test is performed and the Spacecraft will be inspected for any visible damage.

10.5.3.5 Test Criteria

The Spacecraft shows no degradation in functional performance during acoustic exposure, and no degradation in functional performance or mechanical structural integrity upon completion of testing.

10.5.3.6 Test Pre–Requisites

The Spacecraft must be completely (electrically and mechanically) integrated in its launch configuration, except that the propellant tank is empty.

Table XLVII. Qualification Acoustic Test Levels (TITAN–IV (NUS) and Atlas–IIAS)

One–Third Octave Center Frequency (Hz)	Noise Level (dB) re: 20 uN/M2	Test Tolerance (dB)	
25 32 40	122.5 132.0 133.5	+3	–6
50 63 80	134.0 135.0 135.5	+3	–3
100 125 160	136.0 136.0 135.7	+3	–3
200 250 315	134.9 134.0 133.2	+3	–3
400 500 630	131.8 130.5 129.1	+3	–3
800 1000 1250	127.3 125.5 124.0	+3	–3
1600 2000 2500	122.0 120.5 119.0	+3	–3
3150 4000 5000	117.0 115.5 113.5	+3	–6
6300 8000 10000	111.5 112.7 113.5	+3	–6
Overall	145.8	+1	–1
Protoflight Duration: One Minute Qualification Duration: Two Minutes			

10.5.4 Shock Test

10.5.4.1 Purpose

This test demonstrates the capability of the flight hardware to withstand and/or operate in a predicted shock environment. In addition, shock response measurements are taken and compared to the component level shock environments in order to ascertain if the imposed levels are potentially damaging to the components.

10.5.4.2 Test Environment

Location:	Acoustic Chamber, Integration Bay
Cleanliness:	Class 10,000
Temperature:	13 to 24°C
Humidity:	30 to 50%
Access:	Limited
Pressure:	Atmospheric

10.5.4.3 Test Configuration

Spacecraft:	Vertical, with flight adaptor ring (Part 1)
	Horizontal (–Y Up) (Part 2)
Test Fixture:	Spacecraft Vertical Lift Sling (Part 1)
	TAP (Part 2)
Test Equipment:	Accelerometers (incl. data acquisition equipment)
	Data Central
	SCS
	IGSE (for Functional Test)
	Flight Adaptor Ring Catch Fixture
	HGA Deployment Fixture
	S/A Hinge Deployment Fixture
	S/A Blanket Box Pop and Catch Fixture

10.5.4.4 Test Description

The shock test is performed in two parts. The first part of the test simulates the externally–induced shocks caused by Spacecraft separation from the launch vehicle. This test is performed immediately following the acoustic test in the acoustic test chamber. Test accelerometers are installed at the appropriate locations. The Spacecraft is suspended vertically and the launch vehicle adapter is pyrotechnically separated from Spacecraft. This part of the test is performed at least twice to account for the data scatter associated with each actuation. Following this part of the test, the Spacecraft is returned to the Integration Bay.

The second part of the shock test simulates the self–induced shocks caused by the solar array and HGA deployment releases. This test is performed with the Spacecraft on the Three–Axis Positioner (TAP). HGA and solar array deployment actuations are performed separately with the appropriate deployment fixture in place. Each of these actuations is performed twice to account for data scatter.

10.5.4.5 Test Criteria

A successful test requires the following:

a. Successful firing of ordnance.

b. Successful separation.

c. No damage to spacecraft.

d. Spacecraft equipment shock response levels as verified from Data Central spectrum analyses are not excessive.

10.5.4.6 Test Pre–Requisites

(TBD–5)

10.5.4.7 Guidelines/Constraints

(TBD–7)

10.6 Post Environmental Testing

10.6.1 Leak Test

10.6.1.1 Purpose

This test is conducted to insure the integrity of the propulsion subsystem after thruster firings and exposure to acoustic and shock environments.

10.6.1.2 Test Environment

Location:	Integration Bay
Cleanliness:	Class 10,000
Temperature:	13 to 24°C
Humidity:	30 to 50%
Access:	Limited
Pressure:	Atmospheric

10.6.1.3 Test Configuration

Spacecraft:	(TBD–9)
Test Fixture:	(TBD–9)
Test Equipment:	(TBD–9)

10.6.1.4 Test Description

The propulsion subsystem is pressurized with helium as a working gas. The system is monitored for a decay in the pressure of the system. Leak presence is determined by the measured rate of pressure reduction.

10.6.1.5 Test Criteria

(TBD–4)

10.6.1.6 Test Pre–Requisites

(TBD–5)

10.6.1.7 Guidelines/Constraints

This test involves the use of helium gas. Personnel working within (TBD–7) feet of the spacecraft take the proper precautions to ensure that the environment is capable of supporting life. Portable life support equipment must be available in the immediate vicinity for all personnel.

10.6.2 Trouble – Free Operations Test

10.6.2.1 Purpose

This test demonstrates reliable, continuous operation of the spacecraft prior to shipment to the launch facility.

10.6.2.2 Test Environment

Location:	Integration Bay
Cleanliness:	Class 10,000
Temperature:	13 to 24°C
Humidity:	30 to 50%
Access:	Limited
Pressure:	Atmospheric

10.6.2.3 Test Configuration

Spacecraft:	Horizontal, (–Z Up)
Test Fixture:	TAP
Test Equipment:	SCS
	IGSE
	Spacecraft Cooling GSE

10.6.2.4 Test Description

Reliable operation is demonstrated by performing a minimum of 100 hours of testing devoid of flight hardware or flight software problems. Testing consists of a continuous series of simulated orbits; the spacecraft is operated as defined in the Orbital Mode Test (see Section 10.2.4). Spacecraft telemetry is monitored, and subsequently reviewed, for anomalous conditions. Data is flowed to the EOC as part of end–to–end compatibility testing.

10.6.2.5 Test Criteria

(TBD–4)

10.6.2.6 Test Pre–Requisites

All hardware is electrically mated in its flight configuration.

10.6.2.7 Guidelines/Constraints

(TBD–7)

10.6.3 End–to–end Compatibility Test

10.6.3.1 Purpose

This test demonstrates the operational compatibility of the EOS–AM Spacecraft with the ECOM, EOSDIS and Space networks.

10.6.3.2 Test Environment

Location:	Integration Bay
Cleanliness:	Class 10,000
Temperature:	13 to 24°C
Humidity:	30 to 50%
Access:	Limited
Pressure:	Atmospheric

10.6.3.3 Test Configuration

Spacecraft:	Horizontal (–Z Up)
Test Fixture:	TAP
Test Equipment:	SCS
	IGSE
	NASA Compatibility Test Van
Test Support	TDRSS
	ECOM
	EOSDIS

10.6.3.4 Test Description

The End–to–End (ETE) test verifies operational compatibility between the EOS Spacecraft and appropriate ground and space network elements. All tracking, telemetry, command and control elements are linked to demonstrate integrated network operation. Command and data interfaces, as well as ground network command and data processing, are evaluated. The primary activities of the ETE test are:

a. Verification of the ability to send Spacecraft telemetry to the WSC, via TDRSS, in the various RF link and transponder configurations.

b. Verification of the ability of the EOS Operations Center (EOC) to send all command types, at all command rates, to the spacecraft.

c. Verification of the ability of the EOC to receive all telemetry types from the Spacecraft.

d. Verification of the ability of the ground network to process and distribute data to EOC.

During ETE testing, the spacecraft is interfaced with the CTV. The CTV, by serving as a pass through relay between the Spacecraft and TDRSS, completes the link between the Spacecraft and space network elements. Operation of the Spacecraft by EOC, via the ECOM and space networks, is through the spacecraft checkout station. All command and SCC load functions will be exercised from their point of origin during the mission. Data processing is verified at all points of distribution throughout the ECOM and EOSDIS networks. All SN communication links and modes are demonstrated. Detailed test information is provided in the RF Compatibility Plan and Report for the EOS–AM Spacecraft (PN20008709).

10.6.3.5 Test Criteria

(TBD–4)

10.6.3.6 Test Pre–Requisites

Spacecraft to TDRS and Spacecraft to EOC compatibility must be demonstrated prior to this test.

10.6.3.7 Guidelines/Constraints

(TBD–7)

10.6.4 Mission Simulation Test

10.6.4.1 Purpose

This test validates a subset of the activation, nominal, and contingency mission operating procedures. The test also provides mission operations training for the flight operation teams.

10.6.4.2 Test Environment

Location:	Integration Bay
Cleanliness:	Class 10,000
Temperature:	15 to 30°C
Humidity:	30 to 60%
Access:	Limited
Pressure:	Atmospheric

10.6.4.3 Test Configuration

Spacecraft:	Horizontal, (–Z Up)
Test Fixture:	TAP
Test Equipment:	SCS
	IGSE
	ECOM
	NASA Compatibility Test Van
	TDRSS
	EOC

10.6.4.4 Test Description

This test provides training for the flight operations team, validates a subset of the flight operation procedures, and verifies network end–to–end compatibility. The test consists of up to a 24 (TBR–1) hour period in which the flight operations team commands and monitors the spacecraft as if it were in orbit. Actual flight operation procedures are utilized to perform a simulated nominal mission timeline. The test is performed with all required network elements, including the CTV and TDRS, linked to provide end–to–end verification of the integrated operation. All command and SCC load functions are exercised from their point of origin during the mission. Selected network organizations and users participate to verify proper command and telemetry processing at their respective locations. Throughout the test, the SCS maintains hardline telemetry monitoring capability. Detailed test information is provided in the RF Compatibility Plan and Report for the EOS–AM Spacecraft (PN20008709).

10.6.4.5 Test Criteria

(TBD–4)

10.6.4.6 Test Pre–Requisites

Spacecraft to TDRS and Spacecraft to EOC compatibility is demonstrated prior to this test.

10.6.4.7 Guidelines/Constraints

(TBD–7)

10.6.5 Mass Properties Test

10.6.5.1 Purpose

This test measures the weight and center of gravity of the spacecraft. From these measurements, moments and products of inertia are calculated.

10.6.5.2 Test Environment

Location:	Integration Bay
Cleanliness:	Class 10,000
Temperature:	15 to 30°C
Humidity:	30 to 60%
Access:	Limited
Pressure:	Atmospheric

10.6.5.3 Test Configuration

Spacecraft:	Horizontal, Vertical
Test Fixture:	Horizontal Lift Sling
	Vertical Lift Sling
Test Equipment:	Load Cells

10.6.5.4 Test Description

This test is performed in two parts. The first part of the test determines the weight of the Spacecraft and the center of gravity in the X–Y plane. The Spacecraft is lifted using the horizontal lift sling with a load cell attached to each of the four sling risers. The load in each of the risers is measured. The weight and center of gravity in the X–Y plane are calculated from these measurements. The second part of the test determines the center of gravity of the Spacecraft in the Y–Z plane. The Spacecraft is rotated and lifted using the vertical lift sling with a load cell attached to each of the three sling risers. The load in each of the risers is measured and the center of gravity in the Y–Z plane calculated.

10.6.5.5 Test Criteria

(TBD–4)

10.6.5.6 Test Pre–Requisites

All hardware is installed in its launch configuration (with the exception of fuel).

10.6.5.7 Guidelines/Constraints

(TBD–7)

(This page intentionally left blank.)

11 LAUNCH SITE TESTING

11.1 Overview

Launch site testing verifies the integrity of the propulsion system, readiness of the spacecraft for launch, and performance of the spacecraft to launch vehicle interfaces. Activities are performed at the processing facility and at the launch pad. Detailed launch site activity information is provided in the Launch Site Plan PN20008522.

11.2 Spacecraft Leak Check

11.2.1 Purpose

This test is conducted to insure the integrity of the propulsion subsystem after the shipping and handling operations to the launch site have been completed and prior to loading fuel into the system.

11.2.2 Test Environment

Location:	Payload Processing Facility (TBD) at WTR
Cleanliness:	Class 100,000 (controlled to Class 10,000)
Temperature:	15 to 30°C
Humidity:	30 to 60%
Access:	Limited
Pressure:	Atmospheric

11.2.3 Test Configuration

Spacecraft:	Horizontal –Z Up
Test Fixture:	TAP
Test Equipment:	SCS IGSE

11.2.4 Test Description

The propulsion subsystem is pressurized with a working gas. The system is monitored for a decay in the pressure of the system. Leak presence is determined by the measured rate of pressure reduction.

11.2.5 Test Criteria

(TBD–4)

11.2.6 Test Pre–Requisites

(TBD–5)

11.2.7 Guidelines/Constraints

This test involves the use of (TBD–7) gas. Personnel working within (TBD–7) feet of the spacecraft must take the proper precautions to ensure that the environment is capable of supporting life. Portable life support equipment must be available in the immediate vicinity for all personnel.

11.3 Spacecraft Comprehensive Performance Test

11.3.1 Purpose

This test demonstrates proper spacecraft performance after shipment from Astro Space to WTR.

11.3.2 Test Environment

Location:	Payload Processing Facility (TBD) at WTR
Cleanliness:	Class 100,000 (controlled to Class 10,000)
Temperature:	13 to 24°C
Humidity:	30 to 50%
Access:	Limited
Pressure:	Atmospheric

11.3.3 Test Configuration

Spacecraft:	Horizontal (–Z Up)
Test Fixture:	TAP
Test Equipment:	SCS
	IGSE
	Spacecraft Cooling GSE

11.3.4 Test Description

Flight battery charging commences following the post shipment inspection. After completion of battery charging, a comprehensive performance test is performed to verify the spacecraft survived the the cross–country transport and that the HGA has been properly installed after transport. The test is a repeat of the CPT (see Section 9.3) performed during spacecraft I&T. The GSE configuration is the same as during spacecraft I&T. Review and analysis of the test data occurs, at the launch site, immediately following testing.

11.3.5 Test Criteria

(TBD–4)

11.3.6 Test Pre–Requisites

(TBD–5)

11.3.7 Guidelines/Constraints

(TBD–7)

11.4 Launch Pad Spacecraft Bus Aliveness Test

11.4.1 Purpose

This test verifies the proper installation and operation of the T–0 Umbilical cable. The test also verifies that no damage occurred to the spacecraft during the move to the launch pad.

11.4.2 Test Environment

Location:	SLC–3E (TBR)
Cleanliness:	Class 100,000 (controlled to Class 10,000)
Temperature:	13 to 24°C
Humidity:	30 to 60%
Access:	Limited
Pressure:	Atmospheric

11.4.3 Test Configuration

Spacecraft:	Mounted to ELV (Encapsulated, Vertical)
Test Fixture:	N/A
Test Equipment:	SCS
	IGSE
	LSE

11.4.4 Test Description

This test verifies proper operation of the T–0 Umbilical and the spacecraft after being mated to the ELV. Prior to the mating of the T–0 Umbilical, impedance and open circuit measurements are made to verify a safe to mate condition. An aliveness test is then performed to validate the umbilical cable and to verify no damage to the spacecraft occurred during the move to the pad. The test is a repeat of the aliveness test performed throughout spacecraft I&T. Spacecraft power is provided by the SCS throughout the test. After successful completion of the test, battery charging commences.

11.4.5 Test Criteria

(TBD–4)

11.4.6 Test Pre–Requisites

(TBD–5)

11.5 Composite Electrical Readiness Test

11.5.1 Purpose

This test verifies the spacecraft and launch vehicle common interfaces and self compatibility between the two systems. The test also provides final verification of spacecraft battery operation and readiness of redundant components.

11.5.2 Test Environment

Location:	SLC–3E (TBR)
Cleanliness:	Class 100,000 (controlled to Class 10,000)
Temperature:	13 to 24°C
Humidity:	30 to 50%
Access:	Limited
Pressure:	Atmospheric

11.5.3 Test Configuration

Spacecraft:	Mounted to ELV (Encapsulated,Vertical)
Test Fixture:	N/A
Test Equipment:	SCS
	IGSE
	LSE
	Spacecraft Cooling GSE

11.5.4 Test Description

This test consists of three phases: verification of the spacecraft and launch vehicle interface, demonstration of spacecraft and launch vehicle self compatibility, and verification of spacecraft launch readiness.

The spacecraft and launch vehicle interface test verifies proper operation of the telemetry interleaver located within the launch vehicle. Prior to the mating of the Spacecraft and LV interface connectors, impedance and open circuit measurements are made to verify a safe to mate condition. Spacecraft telemetry, stripped from the launch vehicle interleaved data stream, is verified against the I&T database. This spacecraft telemetry stream, received from the launch vehicle, is also verified against the spacecraft hardline telemetry stream obtained via the T–0 Umbilical cable.

Electrical compatibility between the launch vehicle, launch control center equipment, and the spacecraft is verified. The spacecraft is configured to the launch mode. During the configuring and while in the steady state, launch vehicle telemetry is evaluated for any perturbations caused by the spacecraft. Similarly, the launch vehicle and launch control equipment is configured to its launch mode; spacecraft telemetry, both hardline and from the LV, is reviewed for any abnormalities induced by the launch environment.

Launch readiness of the spacecraft redundant components is demonstrated. The spacecraft is configured in the launch mode utilizing redundant components. Spacecraft telemetry is evaluated for any differences from the signature obtained while in the primary configuration. Once configured, the spacecraft is transitioned to battery power for a brief period. This serves as final verification, before launch day, of the battery interface circuitry. Spacecraft battery operation, while on the pad, is kept to a minimum to assure optimal battery charge at launch.

11.5.5 Test Criteria

(TBD–4)

11.5.6 Test Pre–Requisites

(TBD–5)

11.6 Launch Day Dress Rehearsal

11.6.1 Purpose

This test demonstrates the launch readiness of the flight vehicle system (LV and Spacecraft) and launch support organizations.

11.6.2 Test Environment

Location:	SLC–3E (TBR)
Cleanliness:	Class 100,000 (controlled to Class 10,000)
Temperature:	13 to 24°C
Humidity:	30 to 50%
Access:	Limited
Pressure:	Atmospheric

11.6.3 Test Configuration

Spacecraft:	Mounted to ELV (Encapsulated,Vertical)
Test Fixture:	N/A
Test Equipment:	SCS
	IGSE
	LSE

11.6.4 Test Description

This test is a rehearsal of the launch day countdown activities. It is an integrated test involving the launch vehicle, spacecraft, and all personnel required to support the launch countdown. The launch vehicle contractor conducts the simulated countdown with the support of all involved organizations. Actual launch day countdown procedures are utilized to perform all activities, to the extent practical, from the start of the countdown thru launch. Launch hold and abort contingency procedures are also exercised. Countdown operations are orchestrated on the voice networks allocated for launch day.

Spacecraft activities include final closeouts, configuring for launch, and demonstration of EOC readiness. All spacecraft activities are performed in the same manner as on launch day. Closeout activities include final MLI blanket installation, removal of final red tag items, and installation of flight enable plugs. The spacecraft is configured for launch while on external power. Telemetry is evaluated to determine the Go–for–Launch status. The EOC issues a no–op command, to the spacecraft, to demonstrate the operational readiness of the EOC and the command and telemetry links. Trickle charging occurs throughout the countdown; charging is terminated just prior to launch when the spacecraft is transitioned to battery power. Spacecraft personnel and the configuration of the spacecraft and GSE are identical to that planned for launch day.

11.6.5 Test Criteria

(TBD–4)

11.6.6 Test Pre–Requisites

(TBD–5)

12 ACRONYMS AND ABBREVIATIONS

EOS–AM Spacecraft Acronym List

ACS	Attitude Control System
ADE	Array Drive Electronics
ADR	Automated Discrepancy Report
ASSY	Assembly
ASTER	Advanced Spaceborne Thermal Emission and Reflection Radiometer
BDU	Bus Data Unit
BER	Bit Error Rat
BPC	Battery Power Conditioner
BPM	Battery Pressure Monitor
bps	Bits Per Second
C	Celsius (temperature)
C&DH	Command and Data Handling
C&DHS	Command and Data Handling Subsystem
C&T	Command and Telemetry
C/D	Charge/Discharge
CCB	Configuration Control Board
CCHP	Constant Conductance Heat Pipe
CCP	Contamination Control Plan
CDR	Critical Design Review
CEI	Contract End Item
CERES	Clouds and the Earth's Radiant Energy System
CERT	Composite Electrical Readiness Test
CFM	Cubic Feet Per Minute
CM	Configuration Management
cm	Centimeter
CMD	Command
CMD/TLM	Command/Telemetry
COMM	Communications
COMMS	Communications Subsystem

CPHTS	Capillary–Pumped Heat Transport System
CSS	Coarse Sun Sensor
CSTOL	Colorado (University of) Standard Test and Operations Language
CT&C	Command, Telemetry, and Control
CTIU	Command and Telemetry Interface Unit
CTP	Comprehensive Test Plan
CTV	Compatibility Test Van
DAS	Direct Access System
dB	Decibel
DB	Direct Broadcast (DAS Service)
DBMS	Database Management System
dc	Direct Current
DDL	Direct Downlink
deg	Degree
DEU	Deployment Electronics Unit (Solar Array Assembly)
DOD	Depth–of–Discharge
DP	Direct Playback (DAS Service)
DPM	Deputy Program Manager
ECN	Engineering Change Notice
ECOM	EOS Communication System
EED	Electro–Explosive Device
ELV	Expendable Launch Vehicle
EM	Equipment Module
EM STE	Equipment Module Special Test Equipment
EMC	Electromagnetic Compatibility
EMI	Electromagnetic Interference
EOC	EOS Operations Center
EOL	End–of–Life
EOM	End of Mission
EOS	Earth Observing System
EOS–AM	Earth Observing System (AM Mission)
EOS–PM	Earth Observing System (PM Mission)

EOSDIS	EOS Data Information System
EPC	Electronic Power Conditioner
EPS	Electrical Power Subsystem
ESA	Earth Sensor Assembly
ESD	Electro–Static Discharge
ESE	Earth Sensor Electronics
ESH	Earth Sensor Head
ESTOL	EOS Standard Test and Operations Language
ETE	End–To–End
ETM	Engineering Test Model
EU	Electronics Unit (HRTR)
FBA	Fuse Board Assembly
FDB	Fuse Distribution Box
FDIR	Fault Detection, Isolation, and Recovery
FSS	Fine Sun Sensor
FSTB	Flight Software Testbed
FSW	Flight Software
ft	Feet
FVS	Flight Vehicle System
g	Acceleration of Gravity
g	Gram
GaAs	Galium Arsenide
GDE	Gimbal Drive Electronics
GFE	Government Furnished Equipment
GFP	Government Furnished Property
GHz	Gigahertz
GIIS	General Instrument Interface Specification
GIS	General Interface Specification
GN	Ground Network
GN&C	Guidance, Navigation, and Control
GN&CS	Guidance, Navigation, and Control Subsystem
GNC	Guidance, Navigation, and Control (also GN&C)

GRO	Gamma Ray Observatory
GSE	Ground Support Equipment
GSERD	Ground Support Equipment Requirements Document
GSFC	Goddard Space Flight Center (NASA)
H/K	Housekeeping
H/W	Hardware (also HW)
HCA	Heater Control Assembly
HCE	Heater Control Electronics
HGA	High Gain Antenna
hr	Hour
HTS	Horizontal Test Stand
HW	Hardware (also H/W)
Hz	Hertz
I&T	Integration and Test
I/F	Interface
I/O	Input/Output
in	inch
INST	Instrument
IP	International Partner
IRU	Inertial Reference Unit
IVT	Interface Verification Test
kb	kilobit
Kbps	Kilobits per Second
kg	Kilogram
kHz	Kilohertz
km	kilometer
KSA	Ku–Band Single Access
Ku	RF band (Giga hertz range)
kW	Kilowatt
lb	Pound (Mass)
lbf	Pounds of Force
LC	Launch Complex

LCC	Launch Control Center
LSB	Least Significant Bit
LSE	Launch Support Equipment
LSSP	Launch Site Support Plan
LV	Launch Vehicle (also L/V)
LVC	Launch Vehicle Contractor
mA	Milli–Amperes
MAGE	Mechanical Aerospace Ground Equipment
Mb	Megabit
MB	Megabyte (also Mbyte)
Mbps	Megabits per second
MHz	Mega Hertz
MLI	Multi–Layer Insulation
mm	Millimeter
MODIS–N	Moderate Resolution Imaging Spectrometer–Nadir
MOPITT	Measurements of Pollution in the Troposphere
MSB	Most Significant Bit
msec	Milli–second
MST	Mobile Service Tower
N/A	Not Applicable (also NA)
NASA	National Aeronautics and Space Administration
NASA/GSFC	National Aeronautics and Space Administration/Goddard Space Flight Center
NASCOM	NASA Communications Network
NCC	Network Control Center
NiH2	Nickel Hydregen (Battery)
OASIS	Operations and Science Instrument Support Software
p–p	Peak–to–Peak
P/B	Playback
P/L	Payload
PAI	Product Assurance Instruction
PAIP	Product Assurance Implementation Plan
PAM	Product Assurance Manager

PAPE	Produce Assurance Program Engineer
PAPL	Program Approved Parts List
PAPs	Product Assurance Procedures
PDR	Preliminary Design Review
PDU	Power Distribution Unit
PMO	Program Management Office
pps	Pulses per second
psia	Pounds per Square Inch, Absolute
QA	Quality Assurance
QAE	Quality Assurance Engineer
QC	Quality Control
R/L	Return Link
R/T	Real–Time (also RT)
RF	Radio Frequency
RFI	Radio Frequency Interference
RT	Remote Terminal
RTC	Relative Time Command
RTN	Return
RWA	Reaction Wheel Assembly
S/C	Spacecraft (also SC)
S/C	Subcontract
S/S	Subsystem
S/W	Software (also SW)
SA	Solar Array (also S/A)
SAD	Solar Array Drive
SADE	Solar Array Drive Electronics
SAES	Solar Array Electrical Simulator
SBCAR	Spacecraft Bus Core Activity Request
SBIU	S–band Interface Unit
SBT	S–band Transponder
SCA	Spacecraft Adapter
SCAPE	Self Contained Atmosphere Protection Ensemble

SCC	Spacecraft Controls Computer
SCE	Spacecraft Command Encoder
SCM	Software Configuration Management
SCS	Spacecraft Checkout Station
SCT	Stored Command Table
SD	Space Division
SE&I	Systems Engineering and Integration
sec	Second
SEN	Sensor
SERD	Support Equipment Requirements Document
SEU	Single Event Upset
SFE	Science Formatting Equipment
SIS	Spacecraft Interface Simulator
SLC	Space Launch Complex
SLC–3	Space Launch Complex – 3 (Vandenburg Air Force Base)
SMA	S–band Multiple Access (TDRSS)
SMS	Structure and Mechanisms Subsystem
SN	Space Network
SOP	Standard Operating Procedure
SPA	S–band Power Amplifier
SSA	S–band Single Access (TDRSS)
SSA	Sun Sensor Assembly
SSA	Source Selection Authority
SSE	Sun Sensor Electronic
SSPA	Solid–State Power Amplifier
SSST	Solid State Star Tracke
SSU	Sequential Shunt Unit
ST	Star Tracker
STE	Special Test Equipment
STOL	Standard Test and Operations Language
STOP	Short Term Operations Plan
T/B	Thermal/Balance

T/V	Thermal Vacuum
TAM	Three–Axis Magnetometer
TAP	Three–Axis Positioner
TBD	To Be Determined
TBR	To Be Reviewed
TBS	To Be Supplied
TCS	Thermal Control Subsystem
TD	Test Directive
TDRS	Tracking and Data Relay Satellite
TDRSS	Tracking and Data Relay Satellite System
TLM	Telemetry
TONS	TDRSS Onboard Navigation System
TP	Test Procedure
TQCM	Temperature–controlled Quartz Crystal Microbalance
TR	Tape Recorder
TRB	Test Review Board
TRR	Test Readiness Review
V	Voltage
V/T	Voltage/Temperature
VAFB	Vandenberg Air Force Base
Vdc	Volts, direct current
VLS	Vandenberg Launch Site
VXO	Voltage Controlled Crystal Oscillator
W	Watt
WSC	White Sands Complex
WSGT	White Sands Ground Terminal
WSMC	Western Space and Missile Center
WSMCR	Western Space and Missile Center Regulation
WSMR	White Sands Missile Range
WTR	Western Test Range
WTS	Wallops Tracking Station
XMTR	Transmitter

APPENDIX I

20 SPACECRAFT ELECTRICAL CONFIGURATIONS

20.1 Launch Mode

(TBD–10)

20.2 Science Mode

(TBD–10)

20.3 Noisy Mode

(TBD–10)

20.4 Quiet Mode

(TBD–10)

(This page intentionally left blank.)

20001390
CAGE No. 49671
30 July 1993

(Preliminary) Mass Properties Report for the EOS–AM Spacecraft (SEP–120)

Prepared under:
Contract NAS5–32500
NASA Goddard Space Flight Center
Greenbelt, Maryland 20771

Prepared by:
Martin Marietta Corporation
Astro Space
P.O. Box 800
Princeton, New Jersey 08543–0800

DCC080393

(This page intentionally left blank.)

REVISION LOG

This log identifies those portions of this document which have been revised since the original issue. Revised portions of each page, for the current revision only, are identified by marginal striping.

Revision	Paragraph Number(s) Affected	Rev. Date	Approval
Preliminary 1		07/30/93	AD

(This page intentionally left blank.)

TABLE OF CONTENTS

SECTION / PARAGRAPH	TITLE	PAGE
1	SUMMARY	1
2	ATLAS LIFT REQUIREMENTS AND CURRENT STATUS	11
3	STATEMENT OF ASSUMPTIONS	13
3.1	Primary Structure	13
3.2	Instruments	13
3.3	Instrument Accommodation	13
3.3.1	Thermal Accommodation	13
3.3.2	Instrument BDUs, HCEs, and FDBs	13
3.4	Equipment Modules	13
3.5	Solar Array	14
3.6	High Gain Antenna	14
3.7	Propulsion Module	14
3.8	Propellant	14
3.9	Harness	14
3.10	Thermal	16
3.11	Secondary Structure and Miscellaneous	16
3.12	Contingency	16
3.13	Lift Margin and Manager's Reserve	16
3.14	Mass Property Components	16
	APPENDIX I	
10	SECN LOG–MECHANICAL ENGINEERING	21
	APPENDIX II	
20	MASS PROPERTIES REPORT–PDR BASELINE STOWED	47
	APPENDIX III	
30	MASS PROPERTIES REPORT–DEPLOYED SOLAR ARRAY AND HIGH GAIN ANTENNA	65

LIST OF FIGURES

FIGURE	TITLE	PAGE
1	Spacecraft Stowed Configuration Nadir	7
2	Spacecraft Stowed Configuration Zenith	8
3	Spacecraft Deployed Configuration	9
4	Spacecraft Phase Timeline	15

LIST OF TABLES

TABLE	TITLE	PAGE
I	Changes/Updates to Mass Properties	2
II	Spacecraft Weight Summary (lbm)	11
III	Calculation of Percent Average Contingency	17
IV	Spacecraft Phase Inertia Matrix with Contingency	18
V	Spacecraft Phase Inertia Matrix without Contingency	19

(This page intentionally left blank.)

1 SUMMARY

This report reflects the mass properties of the EOS–AM Spacecraft as of May 14, 1993, the baseline freeze. The configuration represents the mass *estimates*, primary structure design, and the component layout to be used with the Atlas IIAS stretched fairing consistent with the mechanical subsystem PDR. All masses in this report have been approved and are in the Mass and Power Report, EOS–DN–RES–025 (Revision P), dated 07 June 1993. All the masses provided in this report are approved *estimates* with the exception of instrument masses, Solar Array Assembly, High Gain Antenna, and propellant which are shown at their approved *allocations*. If the estimate exceeds the allocation for these components, the estimated weight is reported and no contingency is added (currently the High Gain Antenna mass exceeds its allocation , see section 3.12). SECNs 294 through 476 have been incorporated into this report. The status of the incorporation of the SECN's into the master model, from which the mass properties report is generated, is tracked by the SECN LOG, Appendix I. Changes and updates to the Mass Properties Report are summarized in Table I. This table summarizes changes from the last published report (07 May 1993). Results from intermediate runs have been supplied to analysis when requested. Stowed nadir, zenith, and deployed zenith configurations of the Spacecraft are shown in Figures 1, 2, and 3, respectively.

Table I. Changes/Updates to Mass Properties

CHANGES IN BASELINE FROM APRIL 1993 TO JULY 1993
CONFIGURATION = STOWED

Name	..CG, in System Axes (in).. X	Y	Z	.....Inertias, local @ CG, in System Axes (lb-in^2)..... Ixx	Iyy	Izz	Ixy	Iyz	Ixz	(lb) Mass
FROM: BASELINE (incl Cont Wt)	104.2833	2.1678	-2.9374	1.7436e+07	6.8644e+07	6.4923e+07	7.517e+04	-1.318e+05	3.043e+06	10970.10
TO: BASELINE (incl Cont Wt)	105.2482	1.5904	-2.5407	1.7302e+07	6.8186e+07	6.4380e+07	1.061e+05	-2.696e+05	2.861e+06	10885.03
"Primary Structure"										
FROM: PS TOP ASSY	110.2700	-0.4658	-1.3998	1.6748e+06	7.6451e+06	8.2321e+06	1.335e+04	-6.961e+03	-2.315e+05	1550.600
TO: PS TOP ASSY	112.2700	-0.3526	-1.4703	1.6956e+06	7.9326e+06	8.5317e+06	3.136e+04	-7.915e+03	-2.414e+05	1583.700
"Secondary Structure"										
FROM: CORE STR BRACKETS	116.0000	0.0000	0.0000	0.0000e+00	0.0000e+00	0.0000e+00	0.000e+00	0.000e+00	0.000e+00	59.900
TO: CORE STR BRACKETS	128.0000	0.0000	0.0000	0.0000e+00	5.1102e-09	5.1102e-09	0.000e+00	0.000e+00	0.000e+00	58.000
"Harness"										
FROM: INSTRUMENT HARNESS	154.6983	0.0500	1.8630	0.0000e+00	0.0000e+00	0.0000e+00	0.000e+00	0.000e+00	0.000e+00	79.700
TO: INSTRUMENT HARNESS	152.6400	6.8100	14.6100	0.0000e+00	7.0222e-09	7.0222e-09	0.000e+00	0.000e+00	0.000e+00	79.700
FROM: CORE HARNESS	110.2700	-0.4658	-1.3998	0.0000e+00	0.0000e+00	0.0000e+00	0.000e+00	0.000e+00	0.000e+00	129.000
TO: CORE HARNESS	112.2700	-0.3526	-1.4703	0.0000e+00	0.0000e+00	0.0000e+00	0.000e+00	0.000e+00	0.000e+00	116.800
FROM: EM HARNESS	76.0000	9.0000	-35.0000	0.0000e+00	0.0000e+00	0.0000e+00	0.000e+00	0.000e+00	0.000e+00	206.200
TO: EM HARNESS	85.6450	5.3765	-35.9750	0.0000e+00	0.0000e+00	0.0000e+00	0.000e+00	0.000e+00	0.000e+00	291.400
FROM: S AND KU CABLES	110.2700	-0.4658	-1.3998	0.0000e+00	0.0000e+00	0.0000e+00	0.000e+00	0.000e+00	0.000e+00	5.000
TO: S AND KU CABLES	112.2700	-0.3526	-1.4703	0.0000e+00	0.0000e+00	0.0000e+00	0.000e+00	0.000e+00	0.000e+00	8.000
FROM: SIGNAL REF PLANE	110.2700	-0.4658	-1.3998	0.0000e+00	0.0000e+00	0.0000e+00	0.000e+00	0.000e+00	0.000e+00	10.000
TO: SIGNAL REF PLANE	112.2700	-0.3526	-1.4703	0.0000e+00	0.0000e+00	0.0000e+00	0.000e+00	0.000e+00	0.000e+00	10.000
FROM: PRA_VOL	143.3100	-20.9270	-32.4730	1.3034e+02	1.2144e+02	1.2312e+02	0.000e+00	0.000e+00	2.047e+01	9.780
TO: PRA_VOL	143.3100	-20.9270	-32.4730	1.3034e+02	1.2144e+02	1.2312e+02	0.000e+00	0.000e+00	2.047e+01	9.780
FROM: (no entry)										
TO: XBAND CABLE AND WG	112.2700	-0.3526	-1.4703	0.0000e+00	0.0000e+00	0.0000e+00	0.000e+00	0.000e+00	0.000e+00	4.500
"Thermal"										
FROM: EM CCHPS MLI MISC	70.9000	8.9000	-37.3000	0.0000e+00	0.0000e+00	0.0000e+00	0.000e+00	0.000e+00	0.000e+00	69.700
TO: EM CCHPS MLI MISC	70.4320	9.1241	-39.9860	0.0000e+00	0.0000e+00	0.0000e+00	0.000e+00	0.000e+00	0.000e+00	69.700
FROM: MISC THERMAL	116.0000	0.0000	0.0000	0.0000e+00	0.0000e+00	0.0000e+00	0.000e+00	0.000e+00	0.000e+00	15.160
TO: MISC THERMAL	128.0000	0.0000	0.0000	0.0000e+00	0.0000e+00	0.0000e+00	0.000e+00	0.000e+00	0.000e+00	15.160
FROM: S/C MLI	116.0000	0.0000	0.0000	0.0000e+00	0.0000e+00	0.0000e+00	0.000e+00	0.000e+00	0.000e+00	31.680
TO: S/C MLI	128.0000	0.0000	0.0000	0.0000e+00	0.0000e+00	0.0000e+00	0.000e+00	0.000e+00	0.000e+00	31.680
FROM: S/C HCES	116.0000	0.0000	0.0000	0.0000e+00	0.0000e+00	0.0000e+00	0.000e+00	0.000e+00	0.000e+00	19.200
TO: S/C HCES	128.0000	0.0000	0.0000	0.0000e+00	0.0000e+00	0.0000e+00	0.000e+00	0.000e+00	0.000e+00	17.400
"S-Band Omni"										
FROM: S-BAND W/BOOM	182.8800	-19.6250	46.3000	3.0608e+02	3.0608e+02	5.9537e-01	0.000e+00	-7.588e-13	0.000e+00	1.675
TO: S-BAND W/BOOM	182.8800	-19.6250	46.3000	3.0608e+02	3.0608e+02	5.9537e-01	0.000e+00	-7.588e-13	0.000e+00	1.675
FROM: S-BAND W/BOOM	200.0000	-11.3750	-55.5410	3.0608e+02	3.0608e+02	5.9537e-01	-3.689e-11	4.553e-12	-7.284e-11	1.675
TO: S-BAND W/BOOM	200.0000	-11.3750	-55.5410	3.0608e+02	3.0608e+02	5.9537e-01	-3.689e-11	4.553e-12	-7.284e-11	1.675

Table I. Changes/Updates to Mass Properties (Continued)

CHANGES IN BASELINE FROM SEPT 1992 TO APRIL 1993
CONFIGURATION: STOWED

Name	..CG (in System Axes).. X	Y	Z	.....Inertias (local @ CG, in System Axes)..... Ixx	Iyy	Izz	Ixy	Iyz	Ixz	MASS
"DAS Antenna"										
FROM: DAS	82.8620	-9.8755	47.5350	2.0170e+03	2.0170e+03	9.6966e+00	0.000e+00	0.000e+00	0.000e+00	12.491
TO: DAS	82.8620	-9.8755	47.5350	2.0170e+03	2.0170e+03	9.6966e+00	0.000e+00	0.000e+00	0.000e+00	12.491
FROM: XBAND CABLE AND WG	82.8600	-9.8700	47.5000	0.0000e+00	0.0000e+00	0.0000e+00	0.000e+00	0.000e+00	0.000e+00	15.000
TO: (distributed to appropriate equipment)										
"Torque Rods"										
FROM: TORQUE ROD SYS1	27.5000	-39.3750	-0.0000	3.7613e-29	1.7346e-10	1.7346e-10	0.000e+00	0.000e+00	8.077e-20	31.500
TO: TORQUE ROD SYS1	27.5000	-39.8750	-0.0000	3.4628e-29	1.5969e-10	1.5969e-10	0.000e+00	0.000e+00	7.436e-20	29.000
FROM: TORQUE ROD SYS1	-3.2500	0.0000	-50.0000	0.0000e+00	0.0000e+00	0.0000e+00	0.000e+00	0.000e+00	0.000e+00	31.500
TO: TORQUE ROD SYS1	-3.2500	0.0000	-59.0000	0.0000e+00	2.4952e-12	2.4952e-12	0.000e+00	0.000e+00	0.000e+00	29.000
FROM: TORQUE ROD SYS1	2.2500	-39.3750	0.0000	0.0000e+00	0.0000e+00	0.0000e+00	0.000e+00	0.000e+00	0.000e+00	31.500
TO: TORQUE ROD SYS1	2.2500	-39.8750	0.0000	0.0000e+00	0.0000e+00	0.0000e+00	0.000e+00	0.000e+00	0.000e+00	29.000
"Body SUn Sensors"										
FROM: FSS_ASY	0.2400	-37.5340	-60.4050	1.5514e+00	1.1225e+00	2.2157e+00	4.503e-03	-5.466e-01	-1.865e-03	0.900
TO: DELETED (FSS is in Power Module)										
"Earth Sensors"										
FROM: ESA ICM	20.9520	31.1870	48.8180	3.7957e+00	2.3749e+00	3.4867e+00	0.000e+00	6.625e-01	0.000e+00	2.250
TO: ESA ICM	23.6870	28.1900	48.8180	0.0000e+00	0.0000e+00	0.0000e+00	0.000e+00	0.000e+00	0.000e+00	2.200
FROM: ESA ICM	6.3779	-27.4310	48.8180	2.3749e+00	3.7957e+00	3.4867e+00	0.000e+00	0.000e+00	-6.625e-01	2.250
TO: ESA ICM	6.3779	-27.4310	48.8180	0.0000e+00	0.0000e+00	0.0000e+00	0.000e+00	0.000e+00	0.000e+00	2.200
FROM: (no entry - were previously in the power module)										
TO: ESA ELECTRONICS	25.4300	-30.0710	48.3470	0.0000e+00	0.0000e+00	0.0000e+00	0.000e+00	0.000e+00	0.000e+00	5.500
TO: ESA ELECTRONICS	23.6870	2.8380	48.3470	0.0000e+00	0.0000e+00	0.0000e+00	0.000e+00	0.000e+00	0.000e+00	5.500
"Solar Array"										
FROM: GAL_ARS_ARRAY	128.1300	-53.9940	1.4829	2.2909e+05	9.7484e+05	7.8404e+05	1.481e+02	2.138e+04	-1.643e+03	453.400
TO: GAL_ARS_ARRAY	128.1300	-53.9940	1.4829	2.2909e+05	9.7484e+05	7.8404e+05	1.481e+02	2.138e+04	-1.643e+03	453.400
FROM: S/A BOX SUPPT. SYS	206.7000	-37.2040	-3.4835	5.1378e+02	5.1756e+02	7.6792e+00	-7.136e-01	6.795e-01	2.570e+00	3.116
TO: S/A BOX SUPPT. SYS	206.7000	-37.2040	-3.4835	5.1378e+02	5.1756e+02	7.6792e+00	-7.136e-01	6.795e-01	2.570e+00	3.116
FROM: SAD_STRUC_SYS	128.0700	-21.1260	-25.9390	4.5579e+03	4.9902e+03	7.7087e+03	6.817e-04	-2.650e+01	7.241e-03	36.001
TO: SAD_STRUC_SYS	128.0700	-21.1260	-25.9390	4.5579e+03	4.9902e+03	7.7087e+03	6.817e-04	-2.650e+01	7.241e-03	36.001
FROM: SA HARNESS	128.0000	-54.0000	1.0000	0.0000e+00	0.0000e+00	0.0000e+00	0.000e+00	0.000e+00	0.000e+00	5.700
TO: SA HARNESS	128.0000	-54.0000	1.0000	0.0000e+00	0.0000e+00	0.0000e+00	0.000e+00	0.000e+00	0.000e+00	5.700
"HGA Assembly"										
FROM: HGA SYSTEM	237.8100	-3.6873	-23.5440	5.7429e+04	1.9451e+05	2.0358e+05	-2.603e+02	-3.907e+00	4.978e+03	279.500
TO: HGA SYSTEM	237.9600	-3.6417	-24.4640	5.5293e+04	1.9599e+05	2.0304e+05	-8.884e+01	-1.261e+02	2.974e+03	285.500
TO: HGA HARNESS	186.4800	-3.5000	-26.5310	0.0000e+00	0.0000e+00	0.0000e+00	0.000e+00	0.000e+00	0.000e+00	2.800
FROM: HGA HARNESS	170.0000	0.0000	-25.7000	0.0000e+00	0.0000e+00	0.0000e+00	0.000e+00	0.000e+00	0.000e+00	2.800
FROM: (no entry)										
TO: HGA S & KU CABLES	186.4800	-3.5000	-26.5310	0.0000e+00	0.0000e+00	0.0000e+00	0.000e+00	0.000e+00	0.000e+00	3.200
"Equipment Modules"										
FROM: PMAD4_26_ICM	26.3400	13.4500	-46.3610	3.2383e+05	2.1105e+05	3.8786e+05	-1.537e+04	3.614e+04	-2.580e+03	590.140
TO: PMAD5_14_ICM	27.2280	13.0620	-47.6690	3.2416e+05	2.0718e+05	4.0141e+05	-1.675e+04	3.446e+04	-6.518e+03	600.500

DCC080393

20001390
30 July 1993

Table I. Changes/Updates to Mass Properties (Continued)

CHANGES IN BASELINE FROM SEPT 1992 TO APRIL 1993
CONFIGURATION: STOWED

Name	..CG (in System Axes)... X	Y	Z	.....Inertias (local @ CG, in System Axes)..... Ixx	Iyy	Izz	Ixy	Iyz	Ixz	MASS
FROM: HEXBAT3_31_ICM	25.7200	34.6700	-1.3711	3.8211e+04	1.0658e+05	7.3936e+04	-4.737e+01	2.202e+01	-2.942e+03	320.300
TO: HEXBAT5_14_ICM	24.4050	34.6950	-1.3715	4.1001e+04	1.1448e+05	7.9528e+04	2.011e+01	2.291e+01	-3.154e+03	345.000
FROM: SSREC4_26_ICM	77.8810	1.7029	-50.6160	4.6543e+05	2.3783e+05	5.5006e+05	4.033e+03	5.082e+04	8.336e+03	748.900
TO: SSREC5_14_ICM	74.9330	3.4039	-49.9430	3.8608e+05	2.1929e+05	4.5772e+05	4.837e+04	3.566e+04	1.561e+04	747.800
FROM: SENSOR4_26_ICM	141.6800	20.6710	-38.5670	4.6678e+04	1.2330e+05	1.1932e+05	2.418e+03	4.702e+03	1.015e+04	252.250
TO: SENSOR5_14_ICM	141.3600	20.4760	-37.8560	5.0755e+04	1.3346e+05	1.2861e+05	2.710e+03	4.754e+03	9.712e+03	270.730
FROM: RWA4_26_ICM	79.5000	-48.9120	-6.1512	1.8418e+04	6.7610e+04	6.6057e+04	1.522e+00	-1.534e+03	9.761e-01	214.900
TO: RWA5_14_ICM	79.4010	-49.0300	-5.6210	2.1906e+04	7.7316e+04	7.4797e+04	-2.371e+02	-1.863e+03	-3.123e+03	236.900
FROM: DAS4_26_ICM	26.5450	36.0390	30.3500	2.2348e+03	1.0368e+04	9.0705e+03	8.553e+01	-1.767e+01	9.740e+00	51.400
TO: DAS5_14_ICM	26.3890	36.3780	30.1430	3.3635e+03	1.6643e+04	1.4361e+04	1.528e+02	-3.965e+01	1.821e+01	63.900
FROM: COMM4_26_ICM	203.4700	22.8150	-37.0930	3.4067e+04	6.8451e+04	7.0415e+04	-1.911e+03	2.033e+03	-1.568e+03	225.100
TO: COMM5_14_ICM	203.2000	22.6630	-37.0690	3.3703e+04	6.9707e+04	7.2260e+04	-1.069e+03	1.022e+03	-2.173e+03	222.250
"Instruments"										
FROM: SWIR	165.0800	-11.5760	36.9900	0.0000e+00	0.0000e+00	0.0000e+00	0.000e+00	0.000e+00	0.000e+00	291.100
TO: SWIR	165.0800	-11.5760	36.9900	0.0000e+00	0.0000e+00	0.0000e+00	0.000e+00	0.000e+00	0.000e+00	291.100
FROM: TIR	198.0900	5.0000	22.3800	0.0000e+00	0.0000e+00	0.0000e+00	0.000e+00	0.000e+00	0.000e+00	359.400
TO: TIR	198.0900	5.0000	22.3800	0.0000e+00	0.0000e+00	0.0000e+00	0.000e+00	0.000e+00	0.000e+00	359.400
FROM: VSR	119.5600	13.5400	47.7550	0.0000e+00	1.0300e-08	1.0300e-08	0.000e+00	0.000e+00	0.000e+00	116.900
TO: VNIR	119.5600	13.5400	47.7550	0.0000e+00	1.0300e-08	1.0300e-08	0.000e+00	0.000e+00	0.000e+00	116.900
FROM: VEL	140.6900	24.9500	39.0050	0.0000e+00	0.0000e+00	0.0000e+00	0.000e+00	0.000e+00	0.000e+00	63.900
TO: VEL	140.6900	24.9500	39.0050	0.0000e+00	0.0000e+00	0.0000e+00	0.000e+00	0.000e+00	0.000e+00	63.900
FROM: CSP	160.6300	28.5200	38.6850	0.0000e+00	0.0000e+00	0.0000e+00	0.000e+00	0.000e+00	0.000e+00	121.300
TO: CSP	160.6300	28.5200	38.6850	0.0000e+00	0.0000e+00	0.0000e+00	0.000e+00	0.000e+00	0.000e+00	121.300
FROM: MPS	118.2100	34.2700	37.6650	2.1862e-10	2.1862e-10	0.0000e+00	0.000e+00	0.000e+00	0.000e+00	39.700
TO: MPS	118.2100	34.2700	37.6650	2.1862e-10	2.1862e-10	0.0000e+00	0.000e+00	0.000e+00	0.000e+00	39.700
FROM: MODIS_ICM	235.9100	17.0580	16.5760	0.0000e+00	0.0000e+00	0.0000e+00	0.000e+00	0.000e+00	0.000e+00	613.000
TO: MODIS_ICM	235.9100	17.0580	16.5760	0.0000e+00	0.0000e+00	0.0000e+00	0.000e+00	0.000e+00	0.000e+00	613.000
FROM: MODIS 2ND STRUCT	239.4200	19.5920	-7.1928	4.3361e+03	4.4695e+03	8.2648e+03	-1.468e+02	-3.817e+02	2.356e+02	20.230
TO: MODIS 2ND STRUCT	247.9100	19.4580	-6.8251	2.2112e+03	6.0467e+02	2.5981e+03	2.550e+02	-1.839e+02	8.428e+01	14.730
FROM: MOPITT	77.3530	23.7070	40.4350	0.0000e+00	7.7711e-09	7.7711e-09	0.000e+00	0.000e+00	0.000e+00	352.800
TO: MOPITT-MP	76.7930	15.5370	40.7500	5.5852e-10	0.0000e+00	5.5852e-10	0.000e+00	0.000e+00	0.000e+00	405.700
FROM: (no entry - was included in MOPITT RADIATOR)										
TO: COLD PLATE	89.8300	16.9180	32.5220	1.6423e+02	7.2747e+02	8.8715e+02	-2.459e-01	2.888e-04	-5.492e-04	13.500
FROM: (no entry - inadvertantly deleted)										
TO: MOPITT KM	85.3270	16.9120	31.7420	1.4302e+03	2.9156e+03	4.3457e+03	3.483e-02	0.000e+00	0.000e+00	7.500
FROM: CERESICM	38.9100	-15.9050	57.2690	2.1851e-09	2.1851e-09	0.0000e+00	0.000e+00	0.000e+00	0.000e+00	99.200
TO: CERES	9.4998	14.5550	57.2690	2.1851e-09	2.1851e-09	0.0000e+00	0.000e+00	0.000e+00	0.000e+00	99.200
FROM: CERESICM	9.4998	14.5550	57.2690	2.1851e-09	2.1851e-09	0.0000e+00	0.000e+00	0.000e+00	0.000e+00	99.200
TO: CERES	38.9100	-15.9050	57.2690	2.1851e-09	2.1851e-09	0.0000e+00	0.000e+00	0.000e+00	0.000e+00	99.200
FROM: CERES TRUSS	25.7610	0.0000	34.7210	4.0819e+04	3.1264e+04	6.7895e+04	-3.376e+00	1.018e-04	-4.023e+00	44.000
TO: CERES TRUSS	25.7640	4.6147	33.5740	3.4388e+04	2.4291e+04	5.5175e+04	-5.614e+00	1.091e+03	-3.467e+00	34.000
FROM: CERES TRUSS	26.0500	0.0000	30.0000	0.0000e+00	0.0000e+00	0.0000e+00	0.000e+00	0.000e+00	0.000e+00	40.000
TO: (deleted - this was a duplicate)										

Table I. Changes/Updates to Mass Properties (Continued)

CHANGES IN BASELINE FROM SEPT 1992 TO APRIL 1993
CONFIGURATION: STOWED

Name	..CG (in System Axes)... X	Y	Z	.....Inertias (local @ CG, in System Axes)..... Ixx	Iyy	Izz	Ixy	Iyz	Ixz	MASS
FROM: MISR	122.8100	-20.5520	42.0170	6.6293e+04	9.8790e+04	8.4267e+04	-3.417e+02	-9.226e+02	9.568e+02	297.620
TO: MISR	122.8100	-20.5520	42.0170	6.6293e+04	9.8790e+04	8.4267e+04	-3.417e+02	-9.226e+02	9.568e+02	297.620
"Instrument Radiators"										
FROM: TIR RADIATOR	179.5000	37.8500	-6.6650	3.4790e+03	2.1009e+04	1.7543e+04	0.000e+00	0.000e+00	0.000e+00	48.310
TO: TIR RADIATOR	179.5000	37.8500	-6.6650	3.5070e+03	2.1179e+04	1.7684e+04	0.000e+00	0.000e+00	0.000e+00	48.700
FROM: SWIR RADIATOR	127.0000	37.8500	0.0000	7.1808e+03	1.3160e+04	5.9913e+03	0.000e+00	0.000e+00	0.000e+00	47.220
TO: SWIR RADIATOR	127.0000	37.8500	0.0000	7.2386e+03	1.3266e+04	6.0395e+03	0.000e+00	0.000e+00	0.000e+00	47.600
FROM: MOPITT RADIATOR	79.5000	37.8500	2.1500	1.0519e+04	2.5433e+04	1.4930e+04	0.000e+00	0.000e+00	0.000e+00	57.100
TO; MOPITT RADIATOR	79.5000	37.8500	2.1500	7.5896e+03	1.8351e+04	1.0772e+04	0.000e+00	1.418e-11	0.000e+00	41.200
"Instrument BDU's"										
FROM: BDU	216.0600	-25.3560	-27.8750	2.5849e+02	2.9367e+02	2.4047e+02	0.000e+00	0.000e+00	0.000e+00	17.800
TO: BDU	216.0600	-25.3560	-27.8750	2.5849e+02	2.9367e+02	2.4047e+02	0.000e+00	0.000e+00	0.000e+00	17.800
FROM: BDU	164.5100	26.3650	22.6400	2.5849e+02	2.9367e+02	2.4047e+02	0.000e+00	0.000e+00	0.000e+00	17.800
TO: BDU	164.5100	26.3650	22.6400	2.5849e+02	2.9367e+02	2.4047e+02	0.000e+00	0.000e+00	0.000e+00	17.800
FROM: BDU	73.7950	-29.2750	27.8750	2.5849e+02	2.9367e+02	2.4047e+02	0.000e+00	0.000e+00	0.000e+00	17.800
TO: BDU	73.7950	-29.2750	27.8750	2.5849e+02	2.9367e+02	2.4047e+02	0.000e+00	0.000e+00	0.000e+00	17.800
"Instrument FBD's"										
FROM: FDB	141.6400	25.7380	26.2750	1.0342e+01	3.5417e+00	1.1333e+01	0.000e+00	0.000e+00	-3.745e-11	1.700
TO: FDB	141.6400	25.7380	26.2750	1.0342e+01	3.5417e+00	1.1333e+01	0.000e+00	0.000e+00	-3.745e-11	1.700
FROM: FDB	135.3400	25.7380	26.2750	1.0342e+01	3.5417e+00	1.1333e+01	0.000e+00	0.000e+00	0.000e+00	1.700
TO: FDB	135.3400	25.7380	26.2750	1.0342e+01	3.5417e+00	1.1333e+01	0.000e+00	0.000e+00	0.000e+00	1.700
FROM: FDB	60.9960	-6.5297	24.2500	3.5417e+00	1.0342e+01	1.1333e+01	0.000e+00	0.000e+00	0.000e+00	1.700
TO: FDB	60.9960	-6.5297	24.2500	3.5417e+00	1.0342e+01	1.1333e+01	0.000e+00	0.000e+00	0.000e+00	1.700
FROM: FDB	60.6440	-28.7800	24.2500	1.0342e+01	3.5417e+00	1.1333e+01	0.000e+00	0.000e+00	0.000e+00	1.700
TO: FDB	60.6440	-28.7800	24.2500	1.0342e+01	3.5417e+00	1.1333e+01	0.000e+00	0.000e+00	0.000e+00	1.700
"Instrument HCE's"										
FROM: HCE TYPE 2	213.8400	-15.8610	-24.7500	0.0000e+00	0.0000e+00	0.0000e+00	0.000e+00	0.000e+00	0.000e+00	0.600
TO: HCE TYPE 2	216.3400	-14.4610	-26.1500	0.0000e+00	0.0000e+00	0.0000e+00	0.000e+00	0.000e+00	0.000e+00	0.600
FROM: HCE TYPE 2	136.4000	15.4550	22.7750	0.0000e+00	0.0000e+00	0.0000e+00	0.000e+00	0.000e+00	0.000e+00	0.600
TO: HCE TYPE 2	138.9000	16.8550	26.1750	0.0000e+00	0.0000e+00	0.0000e+00	0.000e+00	0.000e+00	0.000e+00	0.600
FROM: HCE TYPE 2	60.7000	-22.4850	22.7500	0.0000e+00	0.0000e+00	0.0000e+00	0.000e+00	0.000e+00	0.000e+00	0.600
TO: HCE TYPE 2	63.2000	-21.0850	26.1500	0.0000e+00	0.0000e+00	0.0000e+00	0.000e+00	0.000e+00	0.000e+00	0.600
"Instrument IC's"										
FROM: IC-ASTER	122.5700	29.9560	25.2800	1.3746e+00	9.8971e+00	8.6108e+00	0.000e+00	0.000e+00	0.000e+00	0.500
TO: IC-ASTER	122.5700	29.9560	25.2800	1.3746e+00	9.8971e+00	8.6108e+00	0.000e+00	0.000e+00	0.000e+00	0.500
FROM: IC STD	226.8500	-13.7650	-24.5470	6.1211e-01	1.0072e+01	9.5733e+00	0.000e+00	0.000e+00	0.000e+00	0.500
TO: IC STD	226.8500	-13.7650	-24.5470	6.1211e-01	1.0072e+01	9.5733e+00	0.000e+00	0.000e+00	0.000e+00	0.500
FROM: IC STD	88.2620	-28.6500	24.5470	1.0072e+01	6.1211e-01	9.5733e+00	0.000e+00	0.000e+00	0.000e+00	0.500
TO: IC STD	88.2620	-28.6500	24.5470	1.0072e-01	6.1211e-01	9.5733e+00	0.000e+00	0.000e+00	0.000e+00	0.500
FROM: IC STD	72.4810	-10.7060	24.5470	6.1211e-01	1.0072e+01	9.5733e+00	0.000e+00	0.000e+00	0.000e+00	0.500
TO: IC STD	72.4810	-10.7060	24.5470	6.1211e-01	1.0072e+01	9.5733e+00	0.000e+00	0.000e+00	0.000e+00	0.500
FROM: IC-CERES	45.2630	-30.6010	48.2430	5.9955e+00	8.3716e-01	5.2769e+00	0.000e+00	0.000e+00	0.000e+00	0.500
TO: IC-CERES	45.2630	-30.6010	48.2430	5.9955e+00	8.3716e-01	5.2769e+00	0.000e+00	0.000e+00	0.000e+00	0.500

DCC080393

20001390
30 July 1993

Table I. Changes/Updates to Mass Properties (Continued)

CHANGES IN BASELINE FROM SEPT 1992 TO APRIL 1993
CONFIGURATION: STOWED

Name	..CG (in System Axes)... X	Y	Z	.....Inertias (local @ CG, in System Axes)..... Ixx	Iyy	Izz	Ixy	Iyz	Ixz	MASS
"BDU Panels"										
FROM: (no entry)										
TO: BAY 2 BDU PANEL	74.8500	-19.0500	22.2500	9.3614e-11	9.3614e-11	0.0000e+00	0.000e+00	0.000e+00	0.000e+00	17.000
TO: BAY 6 BDU PANEL	220.2700	-21.3670	-22.2500	0.0000e+00	0.0000e+00	0.0000e+00	0.000e+00	0.000e+00	0.000e+00	14.000
"Torque Rod Panel"										
FROM: (no entry)										
TO: TORQUE ROD PANEL SYS	26.9190	-73.7500	19.5650	0.0000e+00	0.0000e+00	0.0000e+00	0.000e+00	0.000e+00	0.000e+00	25.000
"Close-out Panels"										
FROM: (no entry)										
TO: CP BAY1/TRIANG SYS	25.7500	0.0000	33.4550	1.8638e+04	2.5766e+04	4.2850e+04	0.000e+00	0.000e+00	0.000e+00	32.400
TO: CP BAY3 -Y SYSTEM	127.0000	-37.1250	-6.4500	1.2720e+03	3.0732e+03	1.8037e+03	0.000e+00	0.000e+00	0.000e+00	15.000
TO: CP BAY4 -Y SYSTEM	159.7500	-37.1250	-6.4500	8.3740e+02	1.7544e+03	9.1856e+02	0.000e+00	0.000e+00	0.000e+00	9.500
TO: CP BAY5 -Y SYSTEM	190.0000	-37.1250	-6.4500	8.3426e+02	1.7205e+03	8.8784e+02	0.000e+00	0.000e+00	0.000e+00	9.500
TO: CP BAY4 -Z SYSTEM	161.9400	-17.6630	-22.2500	1.4126e+03	7.9962e+02	2.2105e+03	0.000e+00	0.000e+00	0.000e+00	10.500
TO: CP BAY5 -Z SYSTEM	193.6200	-17.6650	-21.8250	2.1796e+03	2.3353e+03	4.5124e+03	-2.535e-01	0.000e+00	0.000e+00	15.000
"Propulsion Module"										
FROM: PROP MODULE 4_27	17.1986	-0.3344	0.3896	2.4687e+05	2.2759e+05	2.3140e+05	4.199e+03	-1.905e+03	-4.248e+03	1099.957
TO: PROP MODULE 6_2	17.1919	-0.2591	0.4472	2.5927e+05	2.3443e+05	2.3608e+05	2.439e+03	-9.427e+02	-5.238e+03	1101.414
FROM: PROPELLANT	21.3210	0.0000	0.0000	1.2645e+05	8.5501e+04	8.5501e+05	0.000e+00	0.000E+00	0.000E+00	760.000
TO: FUEL (LAUNCH)	21.3210	0.0000	0.0000	1.2645e+05	8.5501e+04	8.5501e+04	0.000e+00	0.000e+00	0.000e+00	760.000
"Contingency"										
FROM: CONT WT (20%)	86.9788	4.3249	-15.0399	1.6731e+06	5.4871e+06	5.3164e+06	9.830e+03	-3.980e+04	-2.278e+04	1170.510
TO: CONTINGENCY 12%	90.8700	3.7150	-15.3020	1.0539e+06	3.5938e+06	3.5079e+06	-1.510e+04	-3.521e+04	1.754e+04	742.140

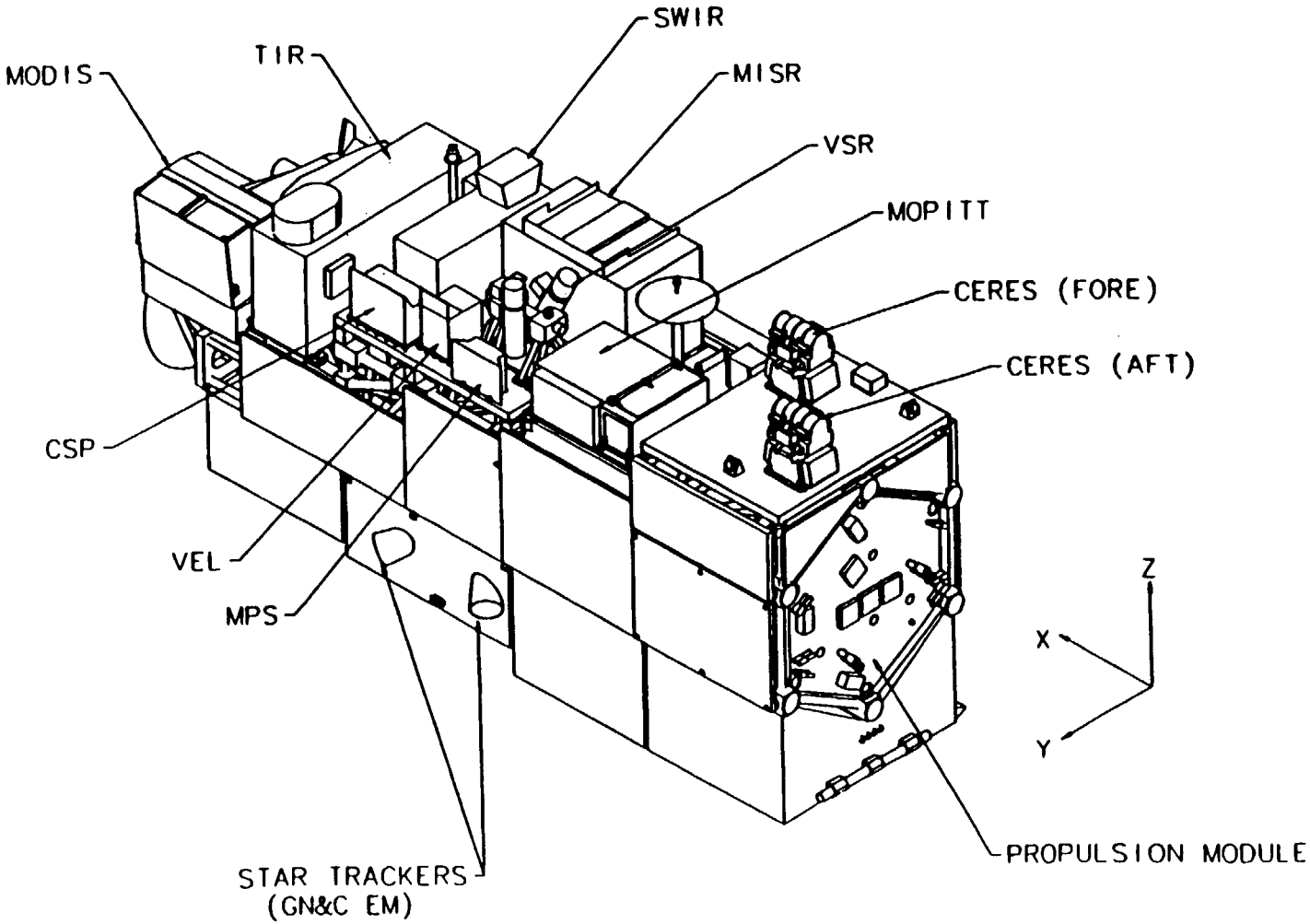

Figure 1. Spacecraft Stowed Configuration Nadir

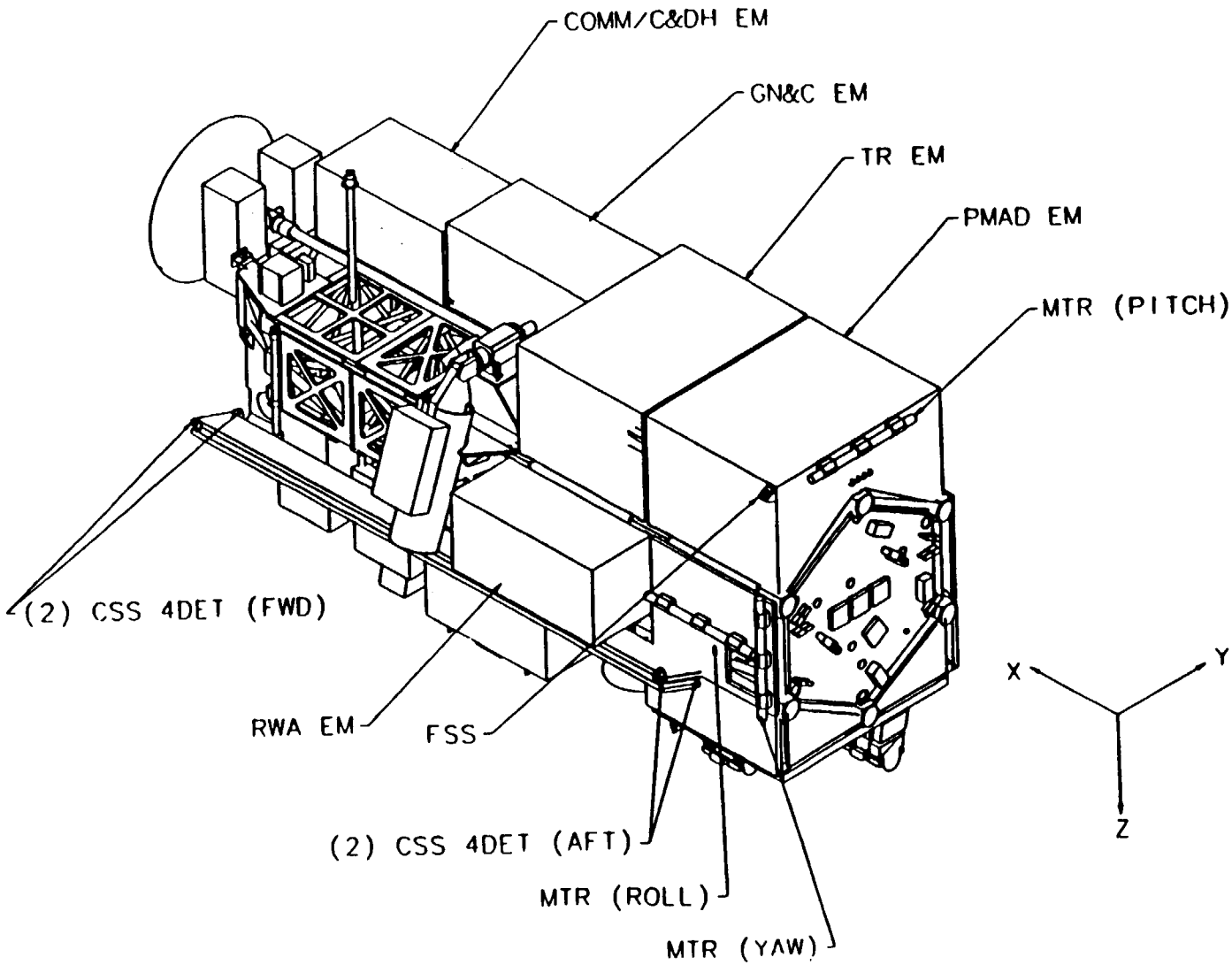

Figure 2. Spacecraft Stowed Configuration Zenith

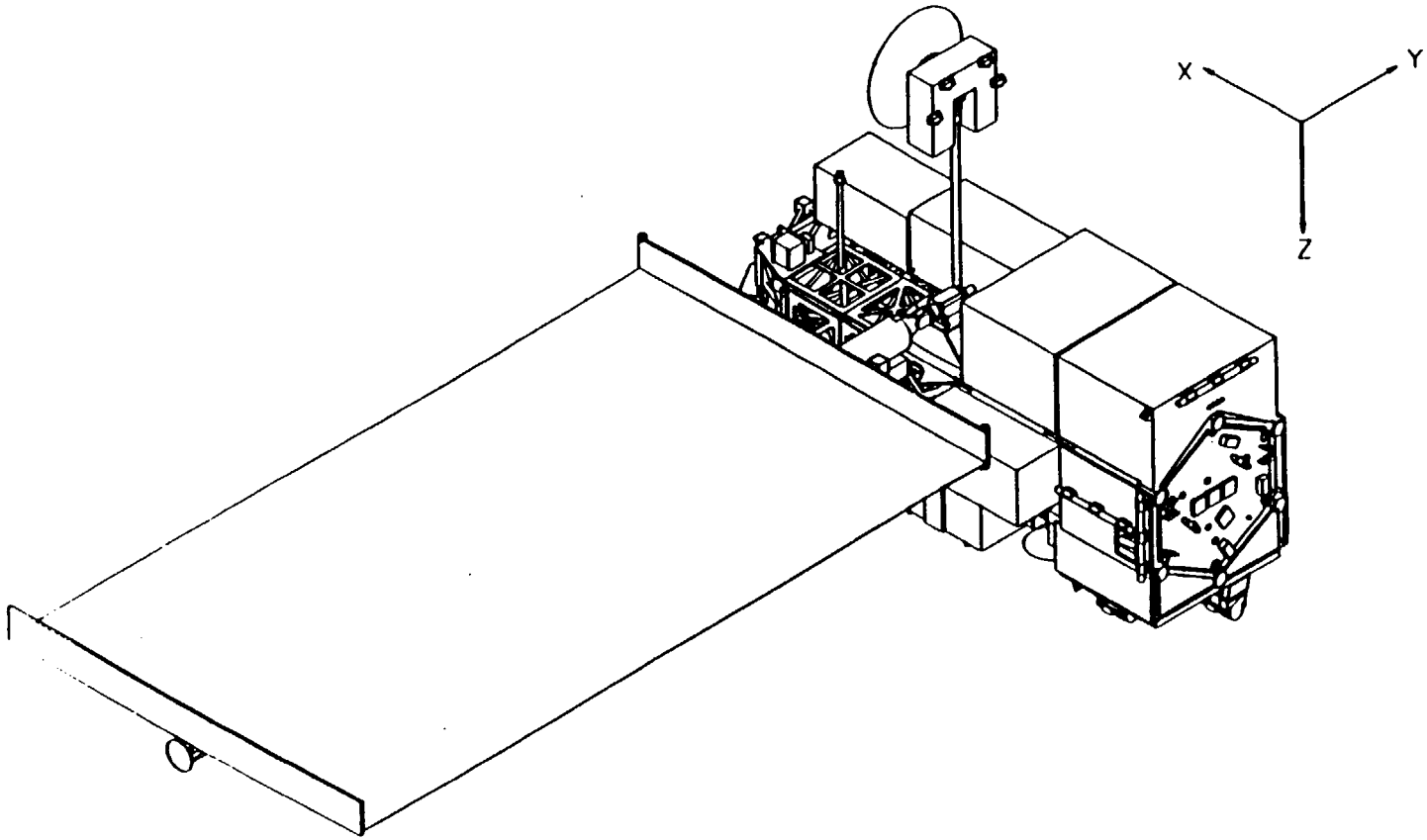

Figure 3. Spacecraft Deployed Configuration Zenith

(This page intentionally left blank.)

2 ATLAS LIFT REQUIREMENTS AND CURRENT STATUS

The Atlas IIAS has a lift capability of 11410 lbm, which includes 350 lbm for flight support equipment. The stowed Spacecraft with 12 percent contingency and flight support equipment has a total mass of 10885 lbm, leaving a 175 lbm lift margin. Currently, the applied hardware contingency weight is 742 lbm. Together the contingency weight and lift margin account for 11 percent of the total lift capability. The lift margin is not included in the mass properties calculations shown in this report. Previously, 500 lbm was reserved as Manager's Reserve but it is being accounted for in the lift margin. Table II provides a summary of the Spacecraft mass distribution, and Appendix II is a report of the mass properties for all components and assemblies on the Spacecraft.

The Atlas IIAS launch center–of–gravity (CG) requirements, derived from the line load limit at the adapter interface, dictates that the Spacecraft have no greater than a 116 inch offset from the separation plane in the +X direction. The design goal of a radial CG offset less than 2.0 inches in the YZ plane has been established based on Titan IV requirements. Currently the Spacecraft has an X CG of 105.3 inches and a YZ radial CG offset of 3.0 inches, the latter of which does not currently meet these design goals.

The last Mass Properties Report (07 May 1993) showed an X CG of 104.3 inches and a radial YZ CG of 3.65 inches. The 1.0 inch increase in the Spacecraft X CG is due primarily to the decrease of the contingency mass, the addition of the closeout panels and the increase in the primary structure mass. The 0.65 inch decrease in the radial offset can be largely attributed to MOPITT's increase in mass and decrease in the y component of its center of gravity. The addition of the closeout panels also pulled the spacecraft cg in the negative y direction, which helped move the radial cg in towards its 2 inch limit.

Table II. Spacecraft Weight Summary (lbm)

	Current Estimate	May 7, 1993 Last Report
Spacecraft Bus	6876	6585
Instruments (allocation)	2507	2454
Propellant (allocation)	760	760
Contingency	742	1171
Atlas Interface Equipment	350	350
Spacecraft Total	11235	11320
Lift Capability	11410	11415
Lift Margin	175	–405
Manager's Reserve	0	500

(This page intentionally left blank.)

3 STATEMENT OF ASSUMPTIONS

3.1 Primary Structure

The fore and aft sections are truss structures with a panel located at bulkhead 7. The base nodes on the aft section accommodate a separation concept that uses separation nuts at six discrete locations at the base of the primary structure. The primary structure accommodates the stretched fairing layout.

3.2 Instruments

The current instrument set includes the following instruments: ASTER, CERES, MISR, MODIS, and MOPITT. The instrument masses are the instrument allocations which include instrument contingency (refer to Section 3.12).

3.3 Instrument Accommodation

For the stretch fairing configuration the CERES, ASTER–MPS, ASTER–CSP, ASTER–VEL, and ASTER–VSR instruments will be accommodated on kinematically mounted plates. Estimates for the mass of the plates and kinematic mounts are included in this report.

MOPITT, MODIS, MISR, ASTER–TIR, and ASTER–SWIR will be directly mounted using kinematic mounts as the interface between the instrument and the primary structure. The mass of the kinematic mounts are included in this report.

The weight breakdown of the each ASTER component is listed separately in Appendix II.

3.3.1 Thermal Accommodation

The ASTER and MOPITT instruments require CPHTS radiators and coldplates resulting in a total of three instrument radiators—two for ASTER (TIR and SWIR) and one for MOPITT.

3.3.2 Instrument BDUs, HCEs, and FDBs

Currently, there are three instrument BDUs at locations consistent with SECN 363. There are 27 instruments HCEs on the spacecraft: eight instrument accommodation hardware HCEs for each CPHTS system (24 total), and one for each BDU system (three total). There are also four FDBs.

3.4 Equipment Modules

The equipment modules consist of one each of the following: GN&C Sensor, COMM/C&DH, RWA, Power, battery panel, Recorder, and DAS panel. In an effort to reduce model complexity, the equipment modules' component listings are not provided in this report. Equipment module component level reports are available upon request. The mass of the kinematic mounts for each equipment module are individually identified in Appendix II.

Harness mass and thermal mass are each listed as lump masses located at the combined CG of the equipment modules.

3.5 Solar Array

The solar array has Gallium Arsenide cells on flexible blankets that are deployed with an astromast. The baseline array used for this report is the TRW 5 kW array.

The deployed blanket is oriented in the XY plane for all deployed cases reported in this document. This orientation is the "zero degree" orientation as per the GN&C Specification PS20004937. The mass properties of the deployed solar array are given in Appendix III.

3.6 High Gain Antenna

The configuration of the High Gain Antenna (HGA) is a 4.5 ft reflector with a RF component box where dimensions reflect SPAR's current baseline design. The CG has also been updated to reflect SPAR's latest estimate, as of June 1993.

The stowed HGA is located off of the +X end of the Spacecraft bus with the deployment system on the zenith face. The "short boom" has been selected as the optimal boom length with the hinge mounting pad on the solar array drive support plate.

The HGA is deployed using a single negator spring hinge such that in the deployed position the HGA is above the zenith face and the boom is parallel to the Spacecraft Z axis. The deployed HGA is oriented facing the +X direction with a "zero degree" elevation for all deployed cases reported in this document as per the GN&C Specification PS20004937. The mass properties of the deployed HGA are given in Appendix III.

3.7 Propulsion Module

The Propulsion Module has changed considerably since the original baseline. Due to a decrease in Spacecraft mass margin and a change in injection orbit, the propellant load has been reduced. Subsequently, the configuration of the Propulsion Module has been simplified. It includes: a single propellant tank attached to a ring which is supported by an all–strut structure and a base panel which houses all propulsion and electronic equipment (one BDU, two PMEAs, four EPCs, four HCEs, and three FDBs).

3.8 Propellant

The total propellant mass is 760 lbm. This mass is for an orbit of 550 x 696 km with a 7.5 year mission life. Propellant is not included in the 12 percent contingency application because the 760 lbm includes a 10 percent propellant margin.

See Figure 4 for the propellant burn throughout the life of the Spacecraft.

3.9 Harness

The harness mass is broken out into applicable regions. The mass for each region appears as a line item in the mass properties report. The X and Y CG coordinates for the instrument harness are the same as the calculated X and Y CG coordinates for all of the instruments. The Z CG coordinate is

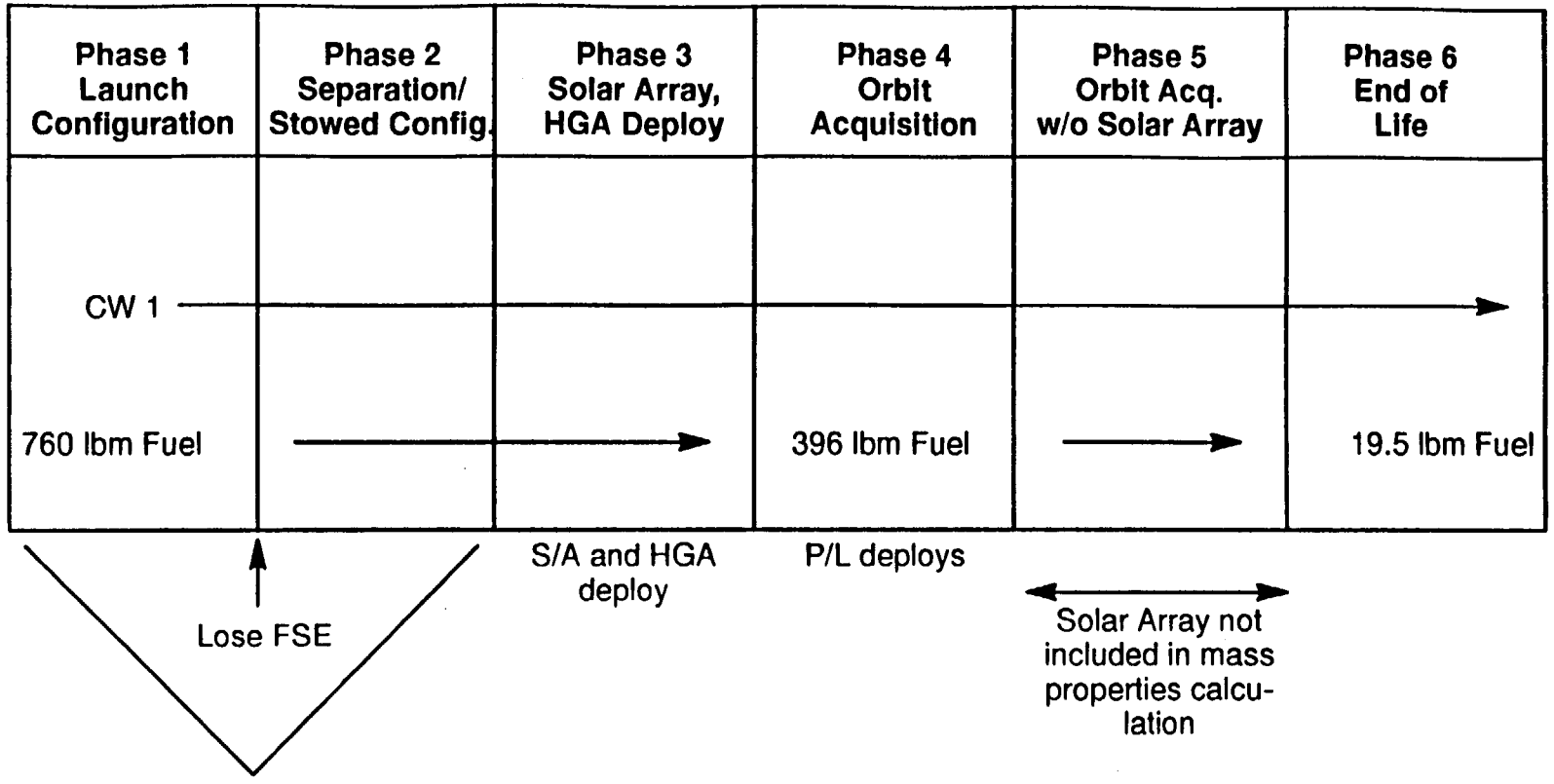

Currently, Phases 1 and 2 are the same because the adapter and separation equipment have not been incorporated into the model.

Legend:
LM = Lift Margin
CW = Contingency Weight
Numbers associated with LM and CW indicate a new location, **NOT** a new weight

Figure 4. Spacecraft Phase Timeline

located based on the position of each instrument on the primary structure, along the Z axis. The core harness, S and Ku Cables, Signal Reference Plane, and X–band cable and waveguide are located at the primary structure center of gravity. Each harness mass is assigned as a lumped mass, i.e., zero inertia. Since the location of the harness has a large impact on the center of gravity of the entire Spacecraft, the locations will continue to be refined.

3.10 Thermal

The thermal mass is broken out into applicable regions. The mass for each region appears as a line item in the mass properties report and the CG of the region has been estimated. Each thermal mass is assigned as a lumped mass, i.e., zero inertia.

3.11 Secondary Structure and Miscellaneous

The secondary structure mass is broken out into applicable regions. The mass for each region appears as a line item in the mass properties report and the CG of the region has been estimated. Each secondary mass, in cases where a detailed model is not available, is assigned as a lumped mass, i.e., zero inertia. As the design evolves, this mass will be represented by specific secondary support structures that will have a mass and inertia and will be located on the Spacecraft.

3.12 Contingency

The reported masses of the instruments, propellant, solar array and high gain antenna are their allocations. For these systems, should the estimated mass exceed the allocated mass, the estimated mass, without additional contingency added, is reported. Currently the high gain antenna estimated mass of 238 lbm exceeds its allocated mass of 200 lbm.

A 12% contingency is applied to all other hardware. This 12% was calculated based on the Mass and Power Report, EOS–DN–RES–025 (Revision P), dated 07 June 1993. The average accuracy class can be determined by dividing the total allocated spacecraft bus mass by the total estimated spacecraft bus mass. Similar to the propellant and instruments, those assemblies and components which have their allocation, rather than estimate, included in the mass properties report are subtracted from the total spacecraft bus mass, and then the average accuracy class computed, shown in Table III.

Table IV shows the mass properties of each phase including this 12% contingency weight. Table V shows the mass properties of each phase, without contingency.

3.13 Lift Margin and Manager's Reserve

Lift margin is not included in the calculation of the mass properties. Manager's Reserve is now included in the lift margin.

3.14 Mass Property Components

For components such as harness and thermal equipment, the total mass is represented as a lump mass: a mass located at the proper CG location, but with zero inertia. For vendor supplied assemblies, the models are detailed, but the mass, CG, and inertias, which are supplied by the vendors, are input as

a single mass properties component. There are several components listed in the Appendices which show zero mass and inertia, but their system mass and inertia are accounted for in a mass properties component.

Table III. Calculation of Percent Average Contingency

Data from Mass & Power Report, Rev. P, Table 5–1	Allocation (lbs)	Estimate (lbs)
Spacecraft Bus Totals	7690.0	6886.2
Subtract assemblies/components with masses listed as allocations in the Mass Properties Report:		
HGA	225.0	238.0
Solar Array	353.0	302.0
SSU	98.0	83.8
CSS	2.4	2.4
New Spacecraft Bus Total	7011.6	6260.0
Percent Average Contingency = ((Allocation / Estimate) – 1) x 100% % = ((7011.6 / 6260.0) – 1) x 100% = **12 %**		

Table IV. Spacecraft Phase Inertia Matrix with Contingency

Phase	1 Launch	2 Separation	3 Solar Array HGA Deploy	4 Orbit Acquisition	5 Orbit Acq. w/o Solar Array	6 End of Life
Mass (lbm)	10885.03	10885.03	10885.03	10521.03	10067.63	10144.56
Center of Gravity						
X (in)	105.248	105.248	102.879	105.533	104.519	108.809
Y (in)	1.590	1.590	–3.544	–3.666	4.160	–3.802
Z (in)	–2.541	–2.541	–7.007	–7.249	–5.456	–7.518
Inertias (lbm–in^2)						
Ixx	1.7302e+07	1.7302e+07	4.2628e+07	4.2541e+07	1.9415e+07	4.2453e+07
Iyy	6.8186e+07	6.8186e+07	6.8046e+07	6.5778e+07	6.3982e+07	6.2681e+07
Izz	6.4380e+07	6.4380e+07	8.0567e+07	7.8332e+07	5.5021e+07	7.5250e+07
Ixy	1.0607e+05	1.0607e+05	–1.1485e+06	–1.0461e+06	7.9399e+05	–9.1974e+05
Iyz	–2.6855e+05	–2.6855e+05	3.0039e+06	2.9946e+06	1.7637e+04	2.9842e+06
Ixz	2.8611e+06	2.8611e+06	1.8164e+06	2.0189e+06	2.4443e+06	2.2687e+06

Table V. Spacecraft Phase Inertia Matrix without Contingency

Phase	1 Launch	2 Separation	3 Solar Array HGA Deploy	4 Orbit Acquisition	5 Orbit Acq. w/o Solar Array	6 End of Life
Mass (lbm)	10142.89	10142.89	10142.89	9778.89	9325.49	9402.42
Center of Gravity						
X (in)	106.300	106.300	103.758	106.646	105.606	110.225
Y (in)	1.435	1.435	–4.075	–4.226	4.196	–4.396
Z (in)	–1.607	–1.607	–6.400	–6.638	–4.672	–6.904
Inertias (lbm–in^2)						
Ixx	1.6115e+07	1.6115e+07	4.1477e+07	4.1392e+07	1.8284e+07	4.1306e+07
Iyy	6.4298e+07	6.4298e+07	6.4283e+07	6.1960e+07	6.0161e+07	5.8781e+07
Izz	6.0704e+07	6.0704e+07	7.6922e+07	7.4609e+07	5.1364e+07	7.1440e+07
Ixy	1.4550e+05	1.4550e+05	–1.0640e+06	–9.4458e+05	8.0389e+05	–7.9666e+05
Iyz	–2.1177e+05	–2.1177e+05	3.0871e+06	3.0773e+06	4.9310e+04	3.0663e+06
Ixz	2.6974e+06	2.6974e+06	1.7195e+06	1.9070e+06	2.3191e+06	2.1394e+06

(This page intentionally left blank.)

APPENDIX I

10 SECN LOG–MECHANICAL ENGINEERING

SECN LOG (Mechanical Engr) *(last updated: 6/8/93)*

SECN	Originator	In-Date	Est/ Alloc	STATUS: Approve Reject Withdraw	Incorp in Master	AFFECTS: Mass,Dim, Power,Loc, Thermal	Equipment Location	REASON FOR CHANGE	CHANGE
SECN's up to and including SECN 293 have been incorporated into the master for October '92 PDR.									
294	B. Stephen-son	9/16/92	E,A	A 9/18/92	N/A	P	DAS Panel	Design Maturity – Frequency source moved to Modulator. Change name to DAS Upconverter.	Change the DAS Upconverter/Frequency Source estimated power from 10.0W to 5.0W, allocation from 15.0W to 5.0 W, and dissipation estimation from 10.0W to 5.0W.
295	B. Stephen-son	9/16/92	E,A	A 9/18/92	N/A	M,P	DAS Panel	Design Maturity – make allocations consistent with single power level. Estimate based on recalculation.	Change the DAS Transmitter estimated power from 60W to 52W, allocated power from 24W to 52W, allocated weight from 20 lbs to 4.5 lbs, , and dissipation estimation from 45W to 38W.
296	B. Stephen-son	9/16/92	E,A	A 9/18/92	N/A	P	DAS Panel	Design Maturity – allocation – addition of frequency source. Estimate updated on breadboard results.	Change the DAS Modulator estimated power from 28.1W to 40.0W, allocation from 18.0W to 40.0 W, and dissipation estimation from 28.1W to 40.0W.
297	B. Stephen-son	9/16/92	E,A	A 9/18/92	N/A	P	Rec EM	Design Maturity – for KSA modulator due to breadboard results.	Change the KSA Modulator estimated power from 8.4W to 11.2W, allocation from 8.4W to 11.2 W, and dissipation estimation from 8.4W to 11.2W.
298	B. Stephen-son	9/16/92	E,A	A 9/18/92	N/A	M,P	COMM EM	Design Maturity – altering unallocated margin to account for changes from SECN's 294 thru 297.	Change the Comm Subsystem allocated power from 69.6W to 26.8W and allocated mass margin from 65.0 lb to 80.5 lb.
299	B. Stephen-son	9/16/92	E,A	A 9/18/92	N/A	P,T	DAS Panel	Power and Dissipation: Design Maturity of the Comm Subsystem components.	Change component temp ranges to be consistent with values in Table IV of GIS for components mounted in equipment modules or on the DAS Panel. Change S-band omni and DAS antenna temp ranges based on latest thermal predictions.
300	N. Benko	9/17/92	A	A 9/18/92	X	P	Instrument	To baseline the MISR Mechanical ICD.	Replace the mechanical sheets of the database with the MISR MICD. Also included are changes to the overview, distribution, and power and data rate estimates.
301	B. Stephen-son	9/24/92	E,A	A 9/25/92	X	M	DAS Panel	Movement of frequency source from DAS Upconverter to DAS Modulator.	Change the DAS Upconverter Source estimated weight from 10.0 lbs to 5.0 lbs. No change in weight of DAS modulator.

SECN LOG (Mechanical Engr) *(last updated: 6/8/93)*

SECN	Originator	In-Date	Est/ Alloc	STATUS: Approve Reject Withdraw	Incorp in Master	AFFECTS: Mass,Dim, Power,Loc, Thermal	Equipment Location	REASON FOR CHANGE	CHANGE
302	N. Benko	9/24/92	A	A 9/25/92	X	M	Instrument	Define individual mass allocations for ASTER components.	Individual mass allocations have been defined for the ASTER components due to the need for this information to further spacecraft design and due to the fact that the UIID placeholders for such info are TBD. This information should be used for all spacecraft analyses.
303	N. Benko	9/24/92	A	A 9/25/92	X	N/A	Instrument	Baseline ASTER TIR & SWIR kinematic mount arrangements.	To baseline ASTER TIR and SWIR kinematic mount arrangements for inclusion in the ASTER database.
304	R. Renzulli	10/12/92	A	A 10/23/92	X	L	Instrument	Maintain the same relative proximity and clear science FOVs.	Shift CERES-FORE and CERES-AFT locations.
305	L. Rattenni	10/19/92	E,A	A 1/8/93	X	M,P	Prop. Mod.	Update EOS Mass & Power Budget Summaries to reflect GE ASD make of propulsion module and the 550 km injection orbit.	Change in mass & power estimate to reflect the Propulsion Module to support the 550 km injection orbit. (See SECN's for details)
306	H. Bond	10/23/92	A	A 3/19/93	N/A	N/A	-	Improved probability of recovery.	Revise the baseline orientation for the sun-pointing levels of safe mode.
307	S. Raymus	11/18/92	A	A 1/8/93	N/A	D	-	To document the changes to various kinematic mount ICD's which have occurred as a result of design maturity.	Original design change due to spacecraft design maturity.
308	N. Benko	11/20/92	A	A	X	D	Instrument	As a result of completing negotiations for establishing the MISR to Spacecraft mechanical interface.	Change MISR dimensions from 51.0"x31.0"x30.5" to 50.0"x30.5"x34.5", also additional changes per SECN.
309	N. Benko	12/3/92	A	A 1/13/93	X	M,P	Instrument	EOS Requirements Document for EOS-AM Spacecraft dated 10/30/92.	Change mass, power, and data rate allocations for all five instruments based on EOS Requirements Document for EOS-AM S/C.
310	N. Benko	12/3/92	A	A 12/11/92	X	M,P,L,D	Instrument	Delete the WBDCS per customers direction.	Remove WBDCS from EOS baseline and from all Program documentation including databases, specifications, interface control documents, deliverable lists, equipment lists, reqmts documents, etc.
311	N. Benko	12/3/92	A	A 12/11/92	X	(FOV)	Instrument	Redefined thermal fields of view and field of view origin locations as well as editorial changes to database. Revise MODIS model to reflect thermal FOV locations and revise drawing to eliminate confusion.	Make editorial changes to database per conversion to Interleaf 5.3. Make changes to MODIS database Contamination section and Power profile.

DCC080393

20001390
30 July 1993

SECN LOG (Mechanical Engr) *(last updated: 6/8/93)*

SECN	Originator	In-Date	Est/ Alloc	STATUS: Approve Reject Withdraw	Incorp in Master	AFFECTS: Mass,Dim, Power,Loc, Thermal	Equipment Location	REASON FOR CHANGE	CHANGE
312	D. Cobb	12/7/92	E	A 12/17/92	X	M,P,D	Comm EM	The original **estimates** for the EOS ADE were based on the Mars Observer Gimble Electronics. The new design utilizes the UARS SADDE with the standard EOS packaging concept.	Change the Dimensions from 7x9.5x8 to 10.5x9.5x10 (L,W,H), Weight from 10.4 to 13.4 lbs, Power (cons.) from 10W to 13W, Power (diss) from 10W to 4.8W on the ADE.
313	D. Cobb	12/7/92	A	A 12/17/92	N/A	M,P	Comm EM	The original **allocations** for the EOS ADE were based on the Mars Observer Gimble Electronics. The new design utilizes the UARS SADDE with the standard EOS packaging concept.	Change the Weight from 12.32 to 16.0 lbs, Power (cons.) from 12.12W to 15.5W, Power (diss) from 12.12W to 6W on the ADE.
314	N. Benko	12/11/92	A	A 12/17/92	X	M	Instrument	Update to instrument model due to design maturity. Changes to database due to error corrections and updated ICD information.	Update database to include allocation and weight changes to distribution, C&DH, mechanical, operations, pointing, power, and thermal sections.
315	J. Fredley	1/6/93	E	A 1/22/93	X	M,D	Instrument	Completion of detail review on CPHTS components of the thermal subsystem preliminary design.	Change the weight of Inst. Thermal Accommodation–ASTER from 97.4 to 95.6 and Inst. Thermal Accommodation–MOPITT weight from 59.0 to 57.1 in the Thermal Subsystem. TIR = 46.31, SWIR=47.22
316	T. McName	1/8/93	E	A 1/8/93	N/A	M,L	Sensor EM Comm EM	A thermal analysis performed on the GN&C Sensor and Comm/C&DH EMs have shown that the CCHPs will not be required.	Delete the GN&C Sensor and Comm/C&DH Equipment Modules from the Thermal Subsystem. Est. weight change from 341.33 lb to 336.17 lb.
317	J. Thomas	1/8/93	E,A	A 1/22/93	X	M,D	Instrument	Redefinement of the packaging design based on the current electrical and mechanical design requirements.	Change the weight of the BDU instruments (7) from 13.20 lbs each to 16.0 lbs or 17.1 lbs where applicable
318	T. Ford	1/8/93	A	A 1/13/93	X	M	Prop. Mod.	New injection scenario allows for lower Propulsion Subsystem and Propulsion Module allocations.	Changes in the Mass requirements from 13,800 lbs to 10,650 lbs resulted in injection orbit change from 300 to 550 km and associated LV Lift allocation from 13,800 to 11,415 lbs.
319	R. Renzulli	1/11/93	E	A 1/23/93	X	M	Instrument	ASTER–TIR secondary structure requires fewer struts due to change in the kinematic mount configuration.	ASTER–TIR secondary structure reduced the number of struts from 10 to 6 (weight changed from 58.84 lbs to 45.8 lbs) in the Structure and Mechanism Subsystem.

SECN LOG (Mechanical Engr) *(last updated: 6/8/93)*

SECN	Originator	In-Date	Est/ Alloc	STATUS: Approve Reject Withdraw	Incorp in Master	AFFECTS: Mass,Dim, Power,Loc, Thermal	Equipment Location	REASON FOR CHANGE	CHANGE
320	D. Cobb	1/11/93	E	A 1/22/93	X	M,D	S/C Core Assy	The EOS Pyrotechnic Relay Assembly is larger due to the one-for-one relay configuration.	Using the Inmarsat Pyrotechnic Relay Assembly (PRA) as a baseline, increase the PRA from 7.7 lbs to 8.12 lbs in the EAS Subsystem.
321	R. Renzulli	1/14/93	A	A 1/22/93	X	L	Instrument	Correction to SECN #304. The x-coordinates were mistakenly given relative to the IMP and not S/C coordinates.	Change old x=40.54 (fore) to x=39.04, and old x=11.13 (aft) to x=9.63. CERES is not moving, only the reporting of its location is changing.
322	G. Gordon	1/21/93	E	A 1/23/93	N/A	P	Instrument	Correction to SECN #309 and the Mass & Power Database.	Change the MISR Database from 60.7 to 67.4 (One-Orbit Average).
323	P. Beresin	1/21/93	E,A	A 1/29/93	X	M,P,D	Comm EM	To reflect updated information from Honeywell contained in SCC Delta Proposal 92-517, Ltr dated 12/5/92.	Change the weight (est & alloc), size, and power of the Spacecraft Controls Computer in the Comm/C&DH EM Subsystem. Wt (est): from 13.2 lb to 12.0 lb Power (est): from 19 W to 14 W Power (alloc): from 19W to 17 W Dim (alloc): from 5.6x10.8x7 to 5.0x10.9x9.1 (LxWxH, in)
324	J. Thomas	1/21/93	E,A	A 1/29/93	X	M,D	Sensor EM Power EM Comm EM DAS Panel	Refinement of the packaging design based on current electrical and mechanical design requirements.	Equipment modules: Change the weight of the GN&C, PWR, COMM/C&DH, and DAS BDU-Housekeeping from 19.0 to 20.1 each and dimensions from 10.3x10.8x7 to 9.1x13.1x8.8. Delete the BDU-Housekeeping (Prop) from the C&DH Subsystem.
					X	D	Rec EM RWA EM		SSRec and RWA: BDU-Housekeeping stays at 19.0 lb. but dimensions change from 10.3x10.8x7 to 9.1x13.1x8.8.
325	N. Benko	1/22/93	A	A 1/22/93	X	M,D	Instrument	Addition to a sunshade and corrected dimensions for the solar view door per MODIS PDR documentation.	Correct the dimensions for the solar view door and add a sunshade to the MODIS database.
326	J. Sonsino	3/3/93	E,A	A 2/5/93	X	M,P,D	Rec EM	Revise the SFE, given the proposed implementation from the subcontractor.	Change the Science Formatting Equipment in the C&DH Subsystem in the TR module as follows: Mass (est): from 50 lb to 40 lb, (alloc): from 42 to 40 lb Power: (est & alloc): from 80 W to 75 W Dim: from 27x20x10 to 14.5x12x7.7 (LxWxH,in)

DCC080393

20001390
30 July 1993

SECN LOG (Mechanical Engr) *(last updated: 6/8/93)*

SECN	Originator	In-Date	Est/ Alloc	STATUS: Approve Reject Withdraw	Incorp in Master	AFFECTS: Mass,Dim, Power,Loc, Thermal	Equipment Location	REASON FOR CHANGE	CHANGE
327	W. D. Henn	1/25/93	E,A	A 2/12/93	X	M,P,D	Rec EM	Replace HRTR, NSTR , and SSB with new component - Solid-State Recorder Equipment Module.	Replace HRTR, NSTR ,SSB with new components: HRSR-DCU: quantity of 2; Mass: 47.5 lb Power: 130 W(cons), 55W (dis) Dim: 20x6.22x11 AND HRSR-DMU: qty of 5; Mass: 81 lb ea. Power: 14 W (dis); Dim: 19x9x12 Delete the LPC from the C&DH Subsystem.
328	J. Thomas	2/4/93	E,A	A 2/5/93	X	M,P,D	Comm EM	Redefinement of the packaging design based on the current electrical and mechanical design requirements.	Change the C&DHS CTIU (Comm/C & DH EM): Mass: from 23.2 lb to 20.2 lb Power: from 43.2 W to 36.6 W Dim: from 8.6x10.8x7 to 9.1x11.8x8.8 (LxWxH,In)
329	F. W. Short	2/1/93	E,A	A 3/5/93	X	M,P,D	Sensor EM	Increase power because of fuses and diodes.	Change the PSU (GN&C EM): Mass: from 12.8 lb to 12.0 lb Power: from 15.0 W to 15.5 W Dim: from 8.5x8.0x9.5 to 7.0x9.5x10.0 (LxWxH,In)
330	F. W. Short	2/1/93	E,A	A 2/5/93	X	M,P,D,L	Rec EM	The LPC has been deleted from use. Its only location is in the Tape Recorder.	Delete the LPC from the Power Subsys (TR EM): Mass was 7.0 lb, Power was 15.0 W, Dim were: 8.5x6x9.5
331	F. W. Short	1/21/93	E,A	A 4/9/93	X	M,P,L	Prop. Mod.	The weight of the box has grown due to the chassis being thicker. **(Action Item to Linda Palmieri to rewrite Power Section.)**	Change the EPC in the Prop. Module: Mass: from 1.8 lb to 2.0 lb (alloc is 2.2 lb) Power (BOL): from 15.6 W (disp, consump) to 4.3W (disp) & 28.6W (consump) Power (EOL): from 13.5 W (disp, consump) to 4.9W (disp) & 29.2W (consump) Dim: from 6.5x7.3x1.5 to 7x7.3x1.5

SECN LOG (Mechanical Engr) *(last updated: 6/8/93)*

SECN	Originator	In-Date	Est/ Alloc	STATUS: Approve Reject Withdraw	Incorp In Master	AFFECTS: Mass,Dim, Power,Loc, Thermal	Equipment Location	REASON FOR CHANGE	CHANGE
332	F. W. Short	1/25/93	E,A	A 2/19/93	X	M	Sensor EM Rec EM Comm EM RWA EM DAS Panel	Thicker wall box and 16 fuses on both Side A and B.	Equipment modules: Change mass of the FDB and add FDB to the GN&C EM Subsystem, total quantity increases from 13 to 14. Mass (est): from 1.5 lb to 1.7 lb Mass (alloc): from 1.78 lb to 1.9 lb
					X	M	Prop. Mod.		Prop. Mod.: Change mass of the FDB, Mass (est): from 1.5 lb to 1.7 lb Mass (alloc): from 5.18 to 5.6
					X	M	Instrument		S/C Assy: Change mass of the FDB, Mass (est): from 4.0 lb to 1.7 lb Mass (alloc): from 37.91 lb to 11.22 lb
333	E. Kohl	2/5/93	A	A 2/5/93	N/A	N/A	-	Update Launch Vehicle IRD.	Misc. updates to the Launch Vehicle IRD.
334	N. Benko	2/4/93	A	A 2/5/93	X	N/A	Instrument	To baseline the MISR Mechanical ICD (MICD) Draft 002.	Replace the MISR MICD Draft 001 of the database with MISR MICD Draft 002.
335	N. Benko	2/4/93	A	A 2/5/93	X	N/A	Instrument	To baseline the CERES Mechanical ICD (MICD).	Replace the Mechanical data sheets of the database with the CERES ICD Draft 001.
336	N. Benko	2/4/93	A	A 2/5/93	X	N/A	Instrument	To baseline the MODIS Mechanical ICD (MICD) Draft 002.	Replace the MODIS MICD Draft 001 of the database with MODIS MICD Draft 002.
337	H. Silverman	2/5/93	E,A	A 2/19/93	X	M,P	Instrument	Mass, power, and cost reduction per the customers direction.	Reduce number of instrument BDUs from 7 to 3. See SECN 317.
338	D. Cobb	2/10/93	E,A	A 2/19/93	N/A	P	Comm EM	New allocations & estimates are based on a drive rate of 1 nominal orbital rate.	Change the estimate and allocation to the ADE of the EPS Subsystem.
339	N. Sauers	2/12/93	E,A	A 2/12/93	X	D	Comm EM	Motorola presented data at Component PDR to reflect estimated dimensions.	Change the dimensions of the S-Band Transponder Assy in the Comm/C&DH EM: Dim (alloc): from 11x6x5 to 10x8x8 (LxWxH) Dim (est): to 10x7.4x6.1 (LxWxH)
340	T.Milbourne	2/12/93	E	A 2/19/93	X	M,P,L,D	DAS Panel Rec EM	PDR data and design maturity for weight and power. Minimization of cabling/harness for location change.	Change the DAS Modulator in the Comm Subsystem (DAS Panel): (REFER TO SECN 348) Mass: from 12 lb to 22 lb Power: from 40 W to 49.2 W Loc: from DAS to Recorder EM Dim: from 7x9x8 to 11x9x7.5 (LxWxH)

DCC080393

20001390
30 July 1993

SECN LOG (Mechanical Engr) *(last updated: 6/8/93)*

SECN	Originator	In-Date	Est/ Alloc	STATUS: Approve Reject Withdraw	Incorp in Master	AFFECTS: Mass,Dim, Power,Loc, Thermal	Equipment Location	REASON FOR CHANGE	CHANGE
341	H. Silver-man	2/18/93	E,A	A 2/19/93	X	M	Instrument	Change in BDU-Inst. quantity and associated change in instrument ground requirement.	Spacecraft and Power Subsystem change: Change quantity of the Fuse & Dist. Board (Inst) in the Power Subsystem. Reduce instr FDBs from 6 to 4. See SECN 332.
342	H. Silver-man	2/18/93	A	A 2/19/93	(SECN 363 super-cedes this SECN)	M	Instrument	Change in BDU-Inst. quantity and associated change in instrument ground requirement.	Change quantity and weight of the Interface Conn. Panel (Inst) in the S/C Subsystem.
343	F.W. Short	2/18/93	E	A 3/19/93	X	M,P,D	Power EM	The Power Converters (2) are being incor-porated into the Power Module Boards.	Change the BPC in the Power Module: Mass: from 21.5 lb to 19.6 lb Power: (dissipation) from 99 W to 77 W Dim: from 12.5x10x7 to 9.5x11x10
344	S. Holaday	2/19/93	E,A	A 2/26/93	X	M,P	S/C (RWA EM)	Increased design definition.	Change the weight and allocation of the RWA Power Harness and RWA C&DH. power harness from 4 lb to 5 lb. C&DH harness from 13 lb to 36.7 lb.
345	T. Milbourne	2/17/93	E	A 3/3/93	X	M,P,D	DAS Panel	PDR update and design maturity. Removal of frequency source.	Change the DAS Upconverter in the DAS Panel: Mass: from 5 lb to 1 lb Power: from 5W to 4W Dim: from 7.5x5.5x2.2 to 3.5x3.5x1.2
346	T. Milbourne	2/11/93	E	A 3/3/93	X	M,P,D	Rec EM	PDR update and design maturity. Addition of frequency source.	Change the KSA Modulator in the Recorder EM: Mass: from 12 lb to 20.3 lb Power: from 11.2 W to 16.5 W Dim: from 7x9x8 to 11x9x7.5
347	T. Milbourne	2/17/93	E	A 2/26/93	N/A	P	Comm EM	PDR update.	Change the power consumption of the S-Band Transponder from 46W to 39.1W in the Communication Subsystem.
348	T. Milbourne	2/25/93	E	A 3/3/93	X	M	Rec EM	Correction to error in PDR Data Package.	Change the weight of the DAS Modulator from 22 lbs to 20.3 lbs each in the Recorder EM.
349	N. Benko	2/25/93	E	A 2/26/93	N/A	T	Instrument	Updated temperature ranges from instru-menters based on recent analysis.	Update thermal section of the CERES Data-base.

SECN LOG (Mechanical Engr) *(last updated: 6/8/93)*

SECN	Originator	In-Date	Est/ Alloc	STATUS: Approve Reject Withdraw	Incorp in Master	AFFECTS: Mass,Dim, Power,Loc, Thermal	Equipment Location	REASON FOR CHANGE	CHANGE
350	N. Benko	2/25/93	A	A 3/5/93	X	(FOV)	Instrument	Design Maturity.	Change FOV's in the MISR Database.
351	R. Renzulli	2/26/93	Loca-tion	A 3/5/93	X	L	Instrument	Relocation.	Relocate ASTER-TIR.
352	R. Renzulli	2/26/93	Loca-tion	A 3/5/93	X	L	Instrument	Relocation.	Relocate ASTER-SWIR.
353	R. Renzulli	2/26/93	Loca-tion	A 3/3/93	X	L	S/C	Relocated to reduce the magnetic field levels at the TAMs in the Sensor EM.	Relocate TRX, TRY and TRZ Torque Rods in the GN&C Subsystem.
354	W. Batten/ D. Chalmers	3/3/93	E	A 3/5/93 Action Item	X	M,P,D	S/C	New Type 5 and deletion of Type 2's in Propulsion Module.	Change the HCE's (total qty from 98 to 67): S/C Assy: (qty from 42 to 27): Mass: from 17.16 lb to 19.2 lb Power: from 17.22 W to 16.05 W Dimensions: See SECN for details
					X	M,P,D	Prop. Mod.		HCE's: Propulsion module (qty from 23 to 5) Mass: from 14.95 lb to 6.5 lb Power: from 23.0 W to 10.0 W Dimensions: See SECN for details
					X	M,P,D	Power,Sensor, Rec,RWA-Comm EMs DAS Panel		HCE's: Equipment modules (qty from 33 to 35): Mass: from 14.27 lb to 35.8 lb Power: from 8.46 W to 29.75 W Dimensions: See SECN for details
355	L. Miller	3/5/93	E,A	A 3/5/93	X	M	S/C	Design maturity.	DC Power Distribution Harness mass change. Est from 60 lb to 43. Allocation from 70 lb to 45 lb.
					X	M	S/C		Pyrotechnic Cabling Harness mass change. Est from 18 lb to 6. Allocation from 18 lb to 6.25 lb.
					X	M	S/C (DAS Panel)		DAS Panel Harness mass change. Est from 5.1 lb to 9.8; Alloc from 6 lb to 10.2 lb.
356	C. Scott	3/3/93	E	A 3/5/93	X	M,P	S/C (Power EM Rec EM)	Incorporation of HRSR allowed TR EM design complexity reduction. Power EM CCHP definition changed to match latest proposal.	Change heat pipe weight from 49.54 lb to 15.76 lb **(See SECN for details)**

DCC080393

20001390
30 July 1993

SECN LOG (Mechanical Engr) *(last updated: 6/8/93)*

SECN	Originator	In-Date	Est/ Alloc	STATUS: Approve Reject Withdraw	Incorp In Master	AFFECTS: Mass,Dim, Power,Loc, Thermal	Equipment Location	REASON FOR CHANGE	CHANGE
357	M. Roza	3/5/93	N/A	A 3/5/93	X	M,P,L,D	Rec EM	HRSR does not correctly reflect all functions.	Change from HRSR to Solid State Recorder — no other info given. **(See SECN for details).**
358	L. Ratteni	3/5/93	N/A	A 3/5/93	N/A	M,P	Prop. Mod.	Shift Propulsion Subsystem EPC's and harness into proper subsystem.	Recategorization of Prop Mod EPCs and Harness
359	T.Milbourne	2/3/93	E,A	A 3/5/93	N/A	P	HGA	Most recent SPAR data	Change power on HGA
360	N. Benko	3/12/93	A	A 3/26/93	X	D	Instrument	MISR baffle dimensions defined due to a change in FOV. (See SECN 350)	Change in length and width, and height of lower portion. **See SECN for details.**
361	N. Benko	3/12/93	A	A 3/26/93	X	D,L	Instrument	Post PDR redesign.	Change MODIS model, including changes to the MODIS mainframe dimensions, mounting bracket locations, and cooler field of view. **See SECN for details.**
362	A. Duque	3/12/93	E	A 3/19/93	N/A	P	S/C	Refinement of Power Dissipation and Consumption estimates of the three types of BDU's.	Various power dissipation and consumption changes to the BDU's.
363	H. Silverman	3/17/93	E,A	A 4/9/93	X	M	Instrument	Change in BDU–Inst. quantity and associated change in instrument ground requirement. **THIS SECN SUPERCEDES SECN # 342.**	Change quantity and weight of the Interface Connector Panel (Inst) in the S/C Subsystem from 3 to qty 5, 0.5 lb ea (est. and alloc.). **(Action item to R. Renzulli to determine where to locate these on the S/C.)**
364	D. Fischer	3/17/93	E,A	A 3/19/93	N/A	P	Solar Array	Correction to Mass and Power Database, for the Solar Array Drive.	Change power consumption (est and Alloc) from 10 W to 0 W, and dissipation from 10 W to 8.6 W.
365	E. Kohl	3/19/93	N/A	A 4/9/93	X	N/A	–	Review of the power requirements needed for EOS AM processing	Update power receptacle requirements, change injection orbit parameters. **(Action item to Erika Kohl to review pin allocations)**
366	L. Miller	3/18/93	E,A	W: 3/26/93 (to be re-submitted when updated)	N/A	M	S/C Instrument	Increased design definition. Re–allocation to specific instrument categories	Instrument Power Harness: Wt: from 26.4 to 23.2 (est), 29.7 to 29.7 (alloc)* Instrument C&DH Harness: Wt: from14.4 to 52.5 (est), 20 to 20 (alloc)* *** See SECN for Details**

SECN LOG (Mechanical Engr) *(last updated: 6/8/93)*

SECN	Originator	In-Date	Est/ Alloc	STATUS: Approve Reject Withdraw	Incorp In Master	AFFECTS: Mass,Dim, Power,Loc, Thermal	Equipment Location	REASON FOR CHANGE	CHANGE
367	M. Riley	3/19/93	E	A 3/26/93	X	M,D,T	Solar Array	Baseline locations caused FOV problems. Temperatures now reflect those shown in the performance spec.	Coarse Sun Sensor: Change qty from 2 to 4, Change wt. from 1.2 lb each to .6 lb each, Change dim's from 5.3x5.3x3.5 to 4.1x4.1x2.5. **Action Item to S. Raymus to assess the change.**
368	M. Riley	3/19/93	E	A 3/19/93	N/A (SECN 410)	D,T	Power EM	Update dimensions, temperature ranges specified are too restrictive.	Earth Sensor Electronics (PMAD EM): Change dim's from TBD to 7x7.9x4.3. **(See SECN 410)**
					X	D,T	S/C		Earth Sensor Head: dim's from TBD to 3.9dia x 5.0 **(See SECN 425)**
369	S. Holaday	3/19/93	E	A 3/19/93	X	M,L	S/C Core Assy	Reduction in total number of pyrotechnic mechanisms	Pyrotechnic Relay Assy: Qty from 2 to 1 Change wt. from 19.56 to 9.78. The PRA to be eliminated should be the one presently located on the hex bay close out panel. Keep the remaining PRA on the SAD support structure.
370	K. Smith	3/17/93	E,A	A 3/26/93	X	M	HGA	Contractually the vendor, must meet weight allocation of 225 lb. Current weight allocation uses more than this total allocation. (238lb)	HGA Assembly: Mass (alloc & est): from 200 to 225 lb. **CHANGES THAT WERE APPROVED: EST MASS FROM 200 TOO 238 LB NO ALLOC. MASS CHANGE WAS APPROVED**
371	L. Palmieri	3/26/93	E,A	A 4/9/93	X	M,P,D	Solar Array	The SSU weight estimate has been updated to reflect the down-sizing of the Solar Array Assy. This weight estimate is based upon 28 shunt switches.	Mass: from 50 lb to 83.8 lb (alloc is 98.0 lb) Power: from 120W to 57.8W (dis) Dim: from 21x15.5x7 to 28.5x16.5x8 **ACTIONS: ~~1. C. Faust to assess impact of wt. and dim. change. (weight is ok)~~ 2. L. Palmieri to update SECN with justification for 83 lb. 3. Art Neufeld to verify dimensions.**
372	L. Palmieri	3/26/93	E,A	A 4/9/93	X	M,P,D	Power EM	The PDU weight estimate reflects a packaging analysis presented at the component PDR and includes the addition of the instrument feed current meter shunts and the deletion of the capacitor bank blast shields.	Mass: from 62 lb to 84.7 lb (alloc is 101.6) Power: from 37.6W to 42.6W (disp) from 18W to 32W (consump) Dim: from 33x8x9 to 22.4x16.5x11.7 **ACTIONS: 1. C. Faust to asses impact of wt. and dim. change. 2. L. Palmieri to complete TBD and include sketch of new PDU.**

DCC080393

20001390
30 July 1993

SECN LOG (Mechanical Engr) *(last updated: 6/8/93)*

SECN	Originator	In-Date	Est/ Alloc	STATUS: Approve Reject Withdraw	Incorp In Master	AFFECTS: Mass,Dim, Power,Loc, Thermal	Equipment Location	REASON FOR CHANGE	CHANGE
373	N. Benko	3/25/93	A	A 3/26/93	X	M,P,D	Instrument	To baseline the MISR Mechanical ICD Draft 002 with changes as requested by instrumenter.	Replace the mechanical sheets of the database with the MISR MICD.
374	D. Alex Duque	3/26/93	N/A	A 3/26/93	N/A	N/A	N/A	This SECN does not call out any changes. It establishes the card sets (board type and qty) for the three BDU configurations. There are no impacts or affected documents.	No Change.
375	S. Holaday	3/26/93	E	A 3/26/93	X	M	S/C Core Harness	Increased design definition. Re-allocation of 1553 data bus stubs to be part of the CD&H harness of each instrument and EM instead of the S/C core Data Bus Harness.	1553 Data Bus Cable/Couplers/Term.: Mass (est): from 62 lb to 20 lb Mass (alloc): from 65 lb to 20 lb
376	J. Thomas	3/26/93	E,A	A 4/6/93	X	M,D	S/C	Increase in length of IBDU (.7 in) is required to accommodate the addition of the Command Relay Output Assy. Overall wt. increase due to increase size of chassis and EPC weight increase form 1.8 to 2.0 lb.	BDU (Instrument): Mass: from 17.1 lb to 17.8 lb (est) from 17.1 lb to 19.6 lb (alloc) Dim: from 8.8x9.1x10.3 to 9.5x9.1x10.3 **ACTION: C. Faust to assess impact of weight increase.**
					X	M,D	Prop. Mod.		BDU: Mass: from 17.1 lb to 17.8 lb (est) from 17.1 lb to 19.6 lb (alloc) Dim: from 8.8x9.1x10.3 to 9.5x9.1x10.3
377	J. Thomas	3/26/93	E,A	A 4/6/93	X	M,D	Sensor EM Power EM Comm EM DAS Panel	Increase in height of HBDU (.7 in) is required to accommodate the addition of the Command Relay Output Assy. Overall weight increase due to increases size of chassis and EPC weight increase from 1.8 to 2.0 lb.	BDU (Housekeeping): Mass: from 20.1 to 20.8 lb (est) from 20.1 to 22.9 lb (alloc) Dim: 9.1x13.1x8.8 to 9.1x13.1x9.5 **ACTION: C. Faust to assess impact of weight increase.**
					X	M,D	Rec EM RWA EM		BDU (Housekeeping): Mass: from 19.0 to 20.8 lb (est) from 19.0 to 22.9 lb (alloc) Dim: 9.1x13.1x8.8 to 9.1x13.1x9.5
378	J. Thomas	3/26/93	E,A	A 4/6/93	X	M,D	Comm EM	Size of CTIU increased to accommodate the Honeywell Computer Assy and the Command Relay Output Assy. Overall weight increase of CTIU due to increase size of chassis, EPC weight increase from 1.8 to 2.0 lb and increase weight of CTIU Computer from 2.2 to 5.0 lb.	CTIU: Mass: from 20.2 to 25.9 lb (est) from 20.2 to 28.5 lb (alloc) Dim: from 9.1x11.8x8.8 to 10.8x13.8x10.8

SECN LOG (Mechanical Engr) *(last updated: 6/8/93)*

SECN	Originator	In-Date	Est/ Alloc	STATUS: Approve Reject Withdraw	Incorp in Master	AFFECTS: Mass,Dim, Power,Loc, Thermal	Equipment Location	REASON FOR CHANGE	CHANGE
379	N. Benko	3/30/93	A	A 4/2/93	X	N/A	Instrument	To baseline the ASTER Mechanical ICD Drawing.	Replace the ASTER drawing section of the database with the ASTER Mechanical ICD Drawing.
380	N. Benko	3/25/93	A	A 4/2/93	X	N/A	Instrument	To baseline the CERES Mechanical ICD, Draft 002.	Replace the CERES MICD Draft 001 of the database with CERES MICD Draft 002.
381	S. Holaday	3/29/93	E,A	A 4/2/93	X	M	HGA Harness	Previous estimate was based on a 'similar-to' harness at the beginning of the Space Station Platform program and then scaled up or down based on configuration. This is the current estimate based on the actual interface requirements. (RF cables not included in this weight.)	HGA Boom Power Harness: Mass (est): from 2.9 lb to 1.0 lb Mass (alloc): from 3.0 lb to 1.1 lb HGA Boom C&DH Harness: Mass (est): from 0.9 lb to 1.8 lb Mass (alloc): from 1.0 lb to 2.0 lb
382	S. Holaday	3/29/93	E,A	A 4/2/93	X	M	EM Harness	Increased design definition. First real bottom's up weight estimate based on real configuration, power and thermal definition.	Sensor EM Power Harness: Mass (est): from 2.2 lb to 9.3 lb Mass (alloc): from 3.0 lb to 10.2 lb Sensor EM C&DH Harness: Mass (est): from 12.5 lb to 24.4 lb Mass (alloc): from 15.0 lb to 26.8 lb
383	S. Holaday	3/29/93	E,A	A 4/2/93	X	M	S/C Core Harness	Increased design definition. The new weight includes only the 1553 data bus cabling within S/C core. 1553 data bus stubs are being reallocated to EM and Instrument C&DH Harnesses.	1553 Data Bus Cable/Couplers/Term.: Mass (est): from 62.0 lb to 21.0 lb Mass (alloc): from 65.0 lb to 23.0 lb
384	S. Holaday	3/30/93	E,A	A 4/2/93	X	M	S/A Harness	Increased design definition, due to latest power information and mechanical configuration.	Solar Array Boom Power Harness: Mass (est): from 10.6 lb to 4.8 lb Mass (alloc): from 11.0 lb to 5.3 lb Solar Array Boom C&DH Harness: Mass (est): from 3.2 lb to 0.9 lb Mass (alloc): from 4.0 lb to 1.0 lb
385	S. Raymus	4/8/93	A	A 4/9/93	N/A	D	-	To update kinematic mount MICD's 20001400 and 20008983.	Design changes reflect latest design maturities.
386	L. Miller	4/2/93	E,A	A 4/2/93	X	M	EM Harness	Increased design definition, due to latest power information and mechanical configuration. Part of increase for the C&DH harness is due to the reallocation of 1553 data bus stubs to this harness.	Comm EM Power Harness: Mass (est): from 4.5 lb to 10.9 lb Mass (alloc): from 4 lb to 12 lb Comm EM C&DH Harness: Mass (est): from 21.3 lb to 31.8 lb Mass (alloc): from 21 lb to 35 lb

DCC080393

20001390
30 July 1993

SECN LOG (Mechanical Engr) *(last updated: 6/8/93)*

SECN	Originator	In-Date	Est/ Alloc	STATUS: Approve Reject Withdraw	Incorp In Master	AFFECTS: Mass,Dim, Power,Loc, Thermal	Equipment Location	REASON FOR CHANGE	CHANGE
387	L. Miller	4/1/93	E,A	A 4/2/93	X	M	S/C Core Harness	Increased design definition. Change due partly to HRDL weight being reallocated to EM's and Instrument C&DH harnesses.	High Rate Data Links: Mass (est): from 11.5 lb to 9.0 lb Mass (alloc): from 11.5 lb to 9.0 lb
388	L. Miller	4/1/93	E,A	A 4/2/93	X	M,P	Instrument Harness	Increased design definition. Part of the increase in the C&DH harness is due to the re-allocation of the 1553 data bus stubs to be part of the C&DH harness of each instrument instead of the S/C Core Data Bus Harness. Also HRDL were re-allocated to ASTER, MISR, MODIS C&DH harnesses. (SEE SECN for details on power changes.)	Instrument Power Harness mass: from: 26.4 lb (est) & 29.7 (alloc), qty 8 to: ASTER: 12.5 (E) & 12.5 (A), qty1 ASTER Intra-Inst: 3.9 (E) & 4.3 (A), qty1 CERES: 1.4 (E) & 1.5 (A), qty 1 MISR: 0.7 (E) & 0.8 (A), qty 1 MODIS: 1.0 (E) & 1.1 (A), qty 1 MOPITT: 3.2 (E) & 3.5 (A), qty 1 Instrument C&DH Harness mass: from: 14.4 lb (est) & 20.0 lb (alloc), qty 8 to: ASTER: 28.1 (E) & 30.9 (A), qty 1 ASTER Intra-Inst: 7.0 (E) & 7.7 (A), qty 1 CERES: 5.1 (E) & 5.6 (A), qty 1 MISR: 3.6 (E) & 4.0 (A), qty 1 MODIS: 4.7 (E) & 5.2 (A), qty 1 MOPITT: 8.5 (E) & 9.4 (A), qty 1
389	J. Dow	4/3/93	E,A	A 4/9/93	N/A	P	Comm EM	Refinement of the CTIU interfaces.	Power: (Init Consump) from 29.4 W to 27.3 W (Stby Dissipation) from 15.4 W to 18.8 W (Init. Dissipation) from 29.4 W to 30.9 W
390	H. Bond	4/8/93	E,A	A 4/9/93	N/A	P	Solar Array	The Drive Electronics Unit (DEU) of the Vendor Supplied SA is turned on in preparation for the deployment of the solar array, and it turns itself off once the array has been successfully deployed.	Power (Science mode): from 10 W to 0 W (est) from 12.12 W to 0 W (alloc) ADD: (Standby): 10 W (Deployment): 70 W (stepper motor operation for blanket box separation and for mast deployment)
391	T. Milbourne	4/9/93	E	A 4/9/93	N/A	P	HGA	System requirement change from 30 minute contact time to 20 minute contact time.	Power (est): from 126 W to 121 W
392	N. Benko	4/15/93	A	A	N/A	P	MODIS	Update per MODIS UIID dated 11/6/92	Power (alloc): from 295 W to 245 W

SECN LOG (Mechanical Engr) *(last updated: 6/8/93)*

SECN	Originator	In-Date	Est/ Alloc	STATUS: Approve Reject Withdraw	Incorp in Master	AFFECTS: Mass,Dim, Power,Loc, Thermal	Equipment Location	REASON FOR CHANGE	CHANGE
393	D. Chalmers	4/12/93	E,A	A	X	M, P	S/C	Update heater power requirements. Update for latest configuration changes. Clean up excessive detail in CDD section.	(See SECN for power details) Change MLI mass to: 31.68 lb Change Misc therm equip to: 15.16 lb
					X	M	Power,Comm, Sensor, RWA, Rec, DAS		(Equip mod/change MLI to/ change misc therm to) (Power / 8.47 / 18.83), (Comm / 3.08 / 3.14), (Sensor / 2.86 / 3.51), (RWA / 1.98 / 2.25), (SSREC / 3.69 / 4.29), (DAS / 0.55 / 1.27)
					X	M	Prop. mod		(Prop mod / MLI: 7.10 / Misc: 6.49)E, A
394	M. DiNardo	4/27/93	E	A 4/30/93	X	M	Primary Structure	To stiffen structure to increase frequencies of local structure modes to PDLC levels.	Mass: change from 1550.50 lb to 1578.14 lb
395	R. Renzulli	4/27/93	E	A 4/30/93	X	M	CERES Structure	Dynamic & stress analysis shows that struts 153 and 253 can be removed & requirements will still be met.	Mass: change from 95 lb to 85 lb.
396	L. Miller	4/15/93	E,A	A 4/30/93	X	M,P	Prop. Mod.	Increased design definition. Re-allocation of 1553 data bus stubs to be part of the C&DH harness of each EM instead of the S/C Core Data Bus Harness.	Mass: Change from: Prop Mod Harness, 46.3 (est) and 50.93 (alloc) to: Prop Mod power harn: 17.8 (est), 19.6 (alloc) Prop Mod C&DH harn: 15.2 (est), 16.7 (alloc)
397	H. Bond G. Gordon	4/28/93	A	A 4/30/93	N/A	M	Various (Structures & Mechanisms Subsystem)	Revise allocations to be consistent. Allocations will now be equal to the estimate multiplied by the accuracy class, except for vendor supplied assemblies, for which the allocated mass assigned to the vendor will be reported.	(See SECN for details) -SECNs 394 and 395 affect this section.
398	H. Bond G. Gordon	4/28/93	A	A 4/30/93	N/A	M	Various (Thermal Subsystem)	See 397.	(See SECN for details) Only allocations which aren't referred to in the master model are changed
399	H. Bond G. Gordon	4/28/93	A	A 4/30/93	N/A	M	Various (Elect Accom Subsystem)	See 397.	(See SECN for details)
400	H. Bond G. Gordon	4/28/93	E,A	A 4/30/93	X	M	Various (Electrical Power Subsystem)	See 397.	(See SECN for more details) Solar Array est changed from 409 (which included SSU, CSSU & cable) to 302. Allocation changed from 490.8 to 351. SSU alloc will remain 98 lb.

DCC080393

20001390
30 July 1993

SECN LOG (Mechanical Engr) *(last updated: 6/8/93)*

SECN	Originator	In-Date	Est/ Alloc	STATUS: Approve Reject Withdraw	Incorp In Master	AFFECTS: Mass,Dim, Power,Loc, Thermal	Equipment Location	REASON FOR CHANGE	CHANGE
401	H. Bond G. Gordon	4/28/93	A	A 4/30/93	N/A	M	Various (C&DH Subsystem)	See 397.	(See SECN for more details) Allocations for vendor supplied items will be listed as the maximum mass specified in the specs: SCC: 24lb; DCU: 95 lb; DMU: 405 lb; SFE: 40 lb
402	H. Bond G. Gordon	4/28/93	E,A	A 4/30/93	X	M	Various (Comm Subsystem)	See 397.	(See SECN for more details) S-Band Transponder est. from: 17.3 to 15.3 alloc. from: 38.06 to 34.6 Band Reject Filter alloc from 11.43 to 1.4 Master Oscillator est. from: 5.5 to 2 alloc from: 12.1 to 11 High Gain Antenna alloc remains at 200 (est is currently 238)
403	H. Bond G. Gordon	4/28/93	A	A 4/30/93	N/A	M	Various (Prop. Mod. Subsystem)	See 397.	(See SECN for details)
404	H. Bond G. Gordon	4/28/93	E,A	Rejected 4/30/93 (Replaced by 447)	N/A	M	Various (GN&C Subsystem)	See 397.	(See SECN for more details) Fine Sun Sensor Head: qty is 1, not 2 Star Tracker est. from: 20 to 21.34; alloc. becomes 44 lb (per SECN 405)
405	M. Riley	4/28/93	E,A	A 4/30/93	X	M, P	Sensor EM	Negotiations with vendor.	Star Tracker est. from: 20 to 21.34; alloc. from 40 to 44 lb Power from: 40 W to 26 W
406	M. Riley	4/29/93	E	A 4/30/93	X	M	RWA EM	To agree with vendor compliance matrix.	RWA: from 35 lb to 31.6 lb
407	M. Riley	4/29/93	N/A	A 4/30/93	N/A	T	Solar Array	To update non-operational design allowable limits. The body mounted coarse sun sensor thermal limits should have changed with the solar array mounted CSS limits in SECN 367.	See SECN for details.
408	M. Riley	4/29/93	N/A	A 4/30/93	N/A	T	Power EM	To update non-operational design allowable limits.	See SECN for details

SECN LOG (Mechanical Engr) *(last updated: 6/8/93)*

SECN	Originator	In-Date	Est/ Alloc	STATUS: Approve Reject Withdraw	Incorp in Master	AFFECTS: Mass,Dim, Power,Loc, Thermal	Equipment Location	REASON FOR CHANGE	CHANGE
409	L. Miller	4/29/93	E,A	A 4/30/93	X	M	EM Harness	Increased design definition. Change due to latest power info and mechanical configuration in first bottoms up estimate.	REC EM Power Harness Mass (est): from 3.6 to 12.1 lb Mass (alloc): from 4.0 to 13.3 lb REC EM C&DH Harness Mass (est): from 19.4 to 50.3 lb Mass (alloc): from 21.0 to 55.3 lb
410	S. Raymus	4/30/93	N/A	A 5/7/93	X	L	Power EM	Harness length between ESE and Earth Sensor head must be ≤24". This requirement cannot be met with the ESE in the power EM and head on CERES plate.	Relocate ESE from Power EM to S/C Core Assy
					X	L	S/C Assy		
411	L. Miller	4/29/93	E,A	A 4/30/93	X	M	S/C Core Harness	Increased design definition. Changes due to first bottoms up estimate with latest configuration.	C&DH Discrete Wiring: Mass (est): from 50 to 37.8 lb Mass (alloc): from 50 to 41.6 lb
412	N. Sauers	5/4/93	A	A 5/7/93	X	D	Rec EM	Change requested by SFE vendor. Change in size allocation is intended to allow Fairchild to assess additional packaging options with the goal of reducing risks in box design, fabrication, and test.	SFE: Change dimensions from 14.5x12x7.7 to 18x14x10
413	H. Bond	4/30/93	N/A	A 5/7/93	N/A	T	Various (Propulsion System)	To place all component temperature requirements under configuration control.	Add the non-operational qualification temperature range to the CDD Report.
414	L. Palmieri	5/5/93	E	A 5/14/93	X	M	Hexbay Panel	To change the baseline design of the battery cell open failure by-pass protection.	Hex Bay Battery: est. mass: from 275.3 to 295 lb; Alloc from 302.8 to 324.5 lb
					X	M	Power EM		Power EM Battery: est. mass: from 275.3 to 290 lb; Alloc from 302.8 to 319 lb
415	H. Bond	4/30/93	A	A 5/7/93	N/A	T	Various (Comm Subsystem)	To place all component temperature requirements under configuration control.	Add the non-operational qualification temperature range to the CDD Report.
416	D. Alex Duque	5/6/93	A	A 5/7/93	N/A	P	Various	SECN 401 changed all BDU power allocations to 10% higher than estimates. The resulted in numbers to the nearest hundredth watt. This represents more accuracy than is reasonable.	The allocations should be changed to the nearest tenth watt.

DCC080393

20001390
30 July 1993

SECN LOG (Mechanical Engr) *(last updated: 6/8/93)*

SECN	Originator	In-Date	Est/ Alloc	STATUS: Approve Reject Withdraw	Incorp in Master	AFFECTS: Mass,Dim, Power,Loc, Thermal	Equipment Location	REASON FOR CHANGE	CHANGE
417	R. Renzulli	5/5/93	E	A 5/7/93	X	M	MODIS Structure	The responsibility for secondary structure strut SL651 and the mounting pad are being transferred to the primary structure.	MODIS secondary structure Mass (est): from 20.23 to 14.73 lb Primary Structure Mass (est): from 1578.14 to 1583.64
418	R. Renzulli	5/5/93	E	A 5/7/93	X	M	S/C Assy	These panels are required to mount the BDU/HCE/FDB/IC on the s/c as located in SECN 363.	BDU Panels: Mass: from 0 to 23 lb Quantity: from 4 to 2 BDU Panel DST: Mass: from 0 to 8 lb Quantity: from 0 to 8
419	R. Renzulli	5/3/93	N/A	A 5/14/93	X	D	MOPITT Structure	MOPITT going from a plate mount to a 3 point direct mount.	Change model in master file to reflect the 3 point mount.
420	H. Bond	4/30/93	N/A	A 5/7/93	N/A	T	Various (GN&C Subsystem)	To place all component temperature requirements under configuration control.	Add the non-operational qualification temperature range to the CDD Report.
421	H. Bond	4/30/93	N/A	W 5/7/93	N/A	T	Various (Thermal Subsystem)	To place all component temperature requirements under configuration control.	Add the non-operational qualification temperature range to the CDD Report.
422	H. Bond	4/30/93	N/A	A 5/7/93	N/A	T	Various (Elec. Power Subsystem)	To place all component temperature requirements under configuration control.	Add the non-operational qualification temperature range to the CDD Report.
423	H. Bond	4/30/93	N/A	A 5/7/93	N/A	T	Various (C&DH Subsystem)	To place all component temperature requirements under configuration control.	Add the non-operational qualification temperature range to the CDD Report.
424	H. Bond	4/30/93	N/A	A 5/7/93	N/A	T	Various (Elec. Accom. Subsystem)	To place all component temperature requirements under configuration control.	Add the non-operational qualification temperature range to the CDD Report.

SECN LOG (Mechanical Engr) *(last updated: 6/8/93)*

SECN	Originator	In-Date	Est/ Alloc	STATUS: Approve Reject Withdraw	Incorp In Master	AFFECTS: Mass,Dim, Power,Loc, Thermal	Equipment Location	REASON FOR CHANGE	CHANGE
425	M. Riley	5/6/93	E	A 5/7/93	X	D	RWA EM	Old dimension did not include height and diameter was exclusive of connectors.	RWA Change dimension from OD=16 to 8.5 x 18.0 (height x max OD).
					X	D	Sensor EM	New dimensions reflect the latest evaluation.	ACE Change dim's from 13.5 x 18 x 9 to13.3 x 18 x 9.5
					X	D	S/C Assy	Length and OD order was switched.	Earth Sensor Head Change dim's from 3.9 x 5.0 to 5.0 x 3.9 (L x OD)
426	T. Milbourne	4/29/93	E	A 5/7/93	N/A	P	HGA	SPAR PDR package received shows heater power to be higher than ROM made by GE.	(See SECN for details)
427	T. Milbourne	4/29/93	E	A 5/7/93	N/A	P	Rec EM	Give visibility to the fact that 2 EPC's are used in each modulator.	DAS Modulator (See SECN for details)
428	T. Milbourne	4/29/93	E	A 5/7/93	N/A	P	Rec EM	Give visibility to the fact that 2 EPC's are used in each modulator.	KSA Modulator (See SECN for details)
429	T. Milbourne	4/29/93	E	A 5/7/93	N/A	P	Comm EM	Give visibility to the fact that the master oscillator receives 28 volt power from CTIU versus dedicated 120 volt supply used previously.	Master Oscillator (See SECN for details)
430	T. Milbourne	4/29/93	E	A 5/14/93	N/A	P	DAS Panel	DAS Upconverter to be powered from SSPA EPC since previously planned power tap from DAS modulator moved off the panel.	SSPA (See SECN for details)
431	T. Milbourne	4/29/93	E	A 5/14/93	N/A	P	DAS Panel	DAS Upconverter to be powered from SSPA EPC since previously planned power tap from DAS modulator moved off the panel.	DAS Upconverter (See SECN for details)
432	T. Milbourne	4/29/93	E	A 5/7/93	N/A	P	Comm EM	Give visibility to the fact that the transponder has 2 EPC's, one supplying continuous power to receiver and the second supplying power to the transmitter as required.	S-Band Transponder (See SECN for details)
433	N. Sauers	4/30/93	E,A	A 5/7/93	X	P,D	Comm EM	Motorola data provided in response to PDR Action Items, telecon Action items and updated SBT performance spec.	Band Reject Filter Assy Dissip.: from 1 W to 0.1 W Dimensions: from 6 x 1.8 x 2 to 6.01 x 1.78 x 2.05

DCC080393

20001390
30 July 1993

SECN LOG (Mechanical Engr) *(last updated: 6/8/93)*

SECN	Originator	In-Date	Est/ Alloc	STATUS: Approve Reject Withdraw	Incorp In Master	AFFECTS: Mass,Dim, Power,Loc, Thermal	Equipment Location	REASON FOR CHANGE	CHANGE
434	N. Benko	5/6/93	E	A 5/7/93	N/A	N/A	Instrument	Updated information from MODIS Instrumenter.	(See SECN for details)
435	N. Benko	5/6/93	A	A 5/7/93	N/A	N/A	Instrument	To baseline the MISR Mechanical ICD Drawing.	Replace the MISR drawing section of the database with the MISR Mechanical ICD Drawing.
436	N. Benko	5/6/93	A	A 5/7/93	N/A	N/A	Instrument	To baseline the MODIS Mechanical ICD Drawing.	Replacing the MODIS drawing section of the database with the MODIS Mechanical ICD Drawing.
437	N. Benko	5/6/93	A	A 5/7/93	N/A	N/A	Instrument	To baseline the MODIS Thermal ICD Draft 002 with changes as requested by instrumenter.	Make changes to the MODIS Thermal MICD Draft 002.
438	N. Benko	5/6/93	A	A 5/7/93	N/A	N/A	Instrument	Add ASTER Unique Instrument Interface Document (UIID) dated January 29, 1993 to ASTER Database.	Add UIID to database and make changes as noted on reddened pages of SECN.
439	N. Benko	5/6/93	A	A 5/7/93	N/A	N/A	Instrument	Add CERES Unique Instrument Interface Document (UIID) dated March 15, 1993 to CERES Database.	Add UIID to database and make changes as noted on redlined pages of SECN.
440	N. Benko	5/6/93	A	A 5/7/93	N/A	N/A	Instrument	Add MODIS Unique Instrument Interface Document (UIID) dated November 6, 1992 to CERES Database.	Add UIID to database and make changes as noted on redlined pages of SECN.
441	P. Beresin	5/7/93	E,A	A 5/7/93	X	M,P	Comm EM	To reflect updated weight estimate from Honeywell contained in SCC PDR Data Package dated 22-23 April 1993.	SCC Mass (est): from 12 to 12.7 lb Power: see SECN for details
442	L. Miller	5/5/93	E	A 5/7/93	X	M	EM Harness	Increased design definition. Change due to latest power info and mechanical configuration first bottoms up estimate.	Power Mod. Power Harness Mass (est): from 45.6 to 52.7 lb Mass (alloc): from 50 to 58 lb Power Mod. C&DH Harness Mass (est): from 9.7 to 40.40 Mass (alloc): from 10 to 44.4
443	J. Sonsino	5/5/93	N/A	A 5/7/93	N/A	N/A	Rec EM	To implement the X-Band operational changes as directed by Program Directive 1ENA-V6-0493 dated 4/26/93.	SFE (See SECN for details)
444	J. Sonsino	5/5/93	N/A	A 5/7/93	N/A	N/A	Rec EM	To eliminate the Ku-Band simultaneous real/time and playback data downlinks at 75 Mbps which are not required by the CEI specification.	SFE (See SECN for details)

SECN LOG (Mechanical Engr) *(last updated: 6/8/93)*

SECN	Originator	In-Date	Est/ Alloc	STATUS: Approve Reject Withdraw	Incorp In Master	AFFECTS: Mass,Dim, Power,Loc, Thermal	Equipment Location	REASON FOR CHANGE	CHANGE
445	J. Dow	5/5/93	E,A	A 5/7/93	N/A	P	Comm EM	Additional requirement for CTIU Interface: Supply 28 Vdc at 300 ma to Master Oscillator Component.	CTIU (See SECN for details)
446	N. Benko	5/6/93	A	A 5/14/93	X	N/A	Instrument	New MOPITT contractor has finalized design to be used for S/C PDR.	Replace MOPITT model to reflect new configuration. Also make changes in MOPITT: mass allocation increased by 52.9 lb, to 405.7 lb; dimensions also changed.
447	H. Bond M. Riley	5/6/93	E,A	A 5/13/93	X	M	S/C Assy	To rationalize the GN&C mass estimates and allocations for the MTR, RWA, ESA, FSS, CSS (body), CSS (S/A), IRU, SSST, TAM. To change power allocations to match values in the component specs (See SECN for details)	Earth Sensor Head: est from 2.25 to 2.2 lb each alloc from 4.73 to 4.4 lb Magnetic Torque Rods: est from 31.5 to 29 lb ea. alloc from 94.5 to 87 lb Earth Sensor Electronics: est from 5.52 to 5.5 lb ea alloc from 11.59 to 11.0 lb
					N/A	M	Power EM		Fine Sun Sensor Elec: alloc from 2.52 to 2.4 lb Fine Sun Sensor Head: alloc from .95 to .9 lb
					X	M	Sensor EM		Magnetometer Elec.: Mass est from 1.35 (qty) to 1.6 lb ea (qty 2) Sensor: Mass est from 1.35 (qty2) to 1 lb ea (qty 2) Mass alloc from 5.67 lb (total) to 3.4 lb (for elec.) and 2.0 lb (for sensor). Other allocation changes: CSS (body): from .26 to .25 lb Star Tracker: from 46.95 to 44 lb IRU: from 39.38 to 37.5 lb
					N/A	M	RWA EM		RWA: alloc from 132.72 to 126.40 lb
					N/A	M	Solar Array		CSS (S/A): alloc from 2.52 to 2.4 lb
448	R. Renzulli	5/6/93	E,A E	A 5/7/93	X	M	S/C Assy (Structure)	To add the mass of the torque rod panel to the Mass & Power report.	Change Core Str Misc from 63 to 58 lb (5 lbs was included for the closeout panel). The panel is 21 lbs and the mounts are 4 lbs; dimensions are 50.5 x 41 x 1.5.

DCC080393

20001390
30 July 1993

SECN LOG (Mechanical Engr) *(last updated: 6/8/93)*

SECN	Originator	In-Date	Est/ Alloc	STATUS: Approve Reject Withdraw	Incorp In Master	AFFECTS: Mass,Dim, Power,Loc, Thermal	Equipment Location	REASON FOR CHANGE	CHANGE
449	R. Renzulli	5/6/93	N/A	A 5/7/93	X	L	S/C Assy (Structure)	TRx and TRz are translating –0.5 inches to account for the thickness change of the torque rod panel.	Translate Torque rods and battery plugs in master model, per SECN 449.
450	I. Khatri	2/10/93	E	A 5/7/93	X	M,D	Comm EM	Original estimate was an error.	S-Band Interface Unit Mass: from 10 to 11.75 lb Dim's: from 12 x 8 x 6 to 21 x 10.1 x 5 in.
451	I. Khatri	5/5/93	E	A 5/7/93	X	M,L	S/C Harness	Estimate based on cable type and lengths detailed calculation vs first rough estimate.	S and Ku Band Cables: est mass from 5.0 lb to 3.2 lb @ HGA boom 8.0 lb @ S/C core 1.8 lb @ REC EM 2.2 lb @ Comm EM
452	W. D. Henn	5/7/93	A	A 5/14/93	X	D,P	Rec EM	Design maturity, plus memory capacity increase from 130 to 140 Gb per PD.	DCU Dim's from 20 x 6.22 x 11 to 20.05 x 6.22 x 13.25 Power change: See SECN
453	W. D. Henn	5/7/93	A	A 5/14/93	N/A	M,P	Rec EM	Design maturity.	DCU Mass alloc: from 47.5 to 46.2 lb ea Power change: See SECN for details.
454	W. D. Henn	5/7/93	E	A 5/14/93	N/A	P	Rec EM	Design maturity plus memory capacity increase from 130 to 140 Gb per PD.	DCU See SECN for power changes.
455	W. D. Henn	5/7/93	E,A	A 5/14/93	X	M,P,D	Rec EM	Design maturity permits reduction of number of DMU boxes from 5 to 2. The dimensions, weight, and power have been refined accordingly.	DMU Mass est: from 81 lb ea (qty 5) to 210 lb ea (qty 2) Mass alloc: from 81 lb ea (qty5) to 252 lb ea (qty 2) Dim's: from 19 x 9 x 12 to 20.8 x 23.5 x 15 Power change: See SECN for details.
456	W. D. Henn	5/7/93	E	A 5/14/93	X	M,P	Rec EM	Design maturity.	DCU Mass est: from 47.5 ea (qty 2) to 38.5 lb ea (qty 2)
457	L. Palmieri	5/14/93	E,A	A 5/14/93	X	M,D,P,L	Power EM	The Power EM requires an FDB to fuse the power of the Power EM BDU's and HCE's. This FDB is the standard FDB supplied throughout the S/C.	Add FDB to Power EM: Mass (est/alloc): 1.7 lb / 1.9 lb Dim's: 8 x 4 x 3 Power: See SECN
458	L. Palmieri	5/14/93	N/A	A 5/14/93	N/A	N/A	Various	The 'FDB' is a box not a board.	Change name of 'Fuse Distribution Board' in M&P Report to 'Fuse Distribution Box'.

SECN LOG (Mechanical Engr) *(last updated: 6/8/93)*

SECN	Originator	In-Date	Est/ Alloc	STATUS: Approve Reject Withdraw	Incorp In Master	AFFECTS: Mass,Dim, Power,Loc, Thermal	Equipment Location	REASON FOR CHANGE	CHANGE
459	L. Rattenni	5/14/93	E	A 5/14/93	X	M,P,D	Prop Mod	To add mass to rear bulkhead for panel stiffener and primary structure interface brackets. To remove 4 boost phase thrusters and associated HCE. To update PMEA mass, power, & dim's. (See SECN for power changes)	Rear bulkhead: Mass est from 66.82 to 76.46 lb Brackets & Misc: Mass est from 17.5 to 25.35 lb HCE4: Qty from 5 to 4; total mass from 6.5 to 5.2 5 lb thrusters: Qty from 8 to 4; total mass from 11.28 to 5.64 lb PMEA: Mass est from 13.6 to 14.26 lb ea Dim's from 8.8 x 8.1 x 8.5 to 8.8 x 9.3 x 8.5
460	D. Linder	5/12/93	N/A	A 5/14/93	N/A	N/A	Sensor EM	This SECN was submitted to define changes to the baseline design to support off-index sun pointing.	No change.
461	L. Miller	5/12/93	E	A 5/14/93	X	L	Power EM	This SECN establishes the size of the Battery-Enable/Pre-Enable Panel located on -X panel of the Power EM for baseline.	See SECN for sample layout.
462	I. Khatri	5/10/93	E	A 5/14/93	X	D	DAS Panel	New estimate from the switch spec.	WG Switch: Dim's: from 2.6 x 2.2 x 1.4 to 3.75 x 2.5 x 2.5
463	N. Benko	5/11/93	A	A 5/14/93	N/A	N/A	Instruments	To reflect changes to S/C C&DH resources to instruments due to the BDU changes made in SECNs 337 and 363.	See SECN for details.
464	R. Palmer	5/14/93	E	A 5/14/93	X	M	RWA EM	Redesign of panels of RWA EM to account for reconfigured RWA support design.	RWA Module Structure: Mass (est): from 40 lb to 46.2 lb
465	R. Palmer	5/14/93	E,A	A 5/14/93	X	M	RWA EM	Redesign of RWA support structure.	Add to RWA EM: RWA Supports, Tall: est mass = 17.1 lb (qty 1) RWA Supports, Short: est mass = 12.3 lb (qty 1) Update model with new configuration of RWA's & supports.
466	T. McCormick	5/14/93	N/A	A 5/14/93	N/A	P	DAS Panel	The SSPA will house a "pulse stretcher"circuit which stretches the standard BDU relay drive pulse to a length compatible with the waveguide switch requirements.	See SECN for details.

DCC080393

20001390
30 July 1993

SECN LOG (Mechanical Engr) *(last updated: 6/8/93)*

SECN	Originator	In-Date	Est/ Alloc	STATUS: Approve Reject Withdraw	Incorp in Master	AFFECTS: Mass,Dim, Power,Loc, Thermal	Equipment Location	REASON FOR CHANGE	CHANGE
467	I. Khatri	5/14/93	E	A 5/14/93	X	M	S/C Harness	Estimate based on cable type and lengths detailed calculation vs first rough estimate.	X Band Cables & waveguide:est mass from 15.0 lb to 3.0 lb @ DAS Panel 4.5 lb @ S/C core 1.0 lb @ Rec EM
468	D. Chalmers	5/14/93	E,A	A 5/14/93	X	M,P,D	Rec EM	-Change in qty of Rec EM HCE's due to reduction in DMU's per SECN 455. -Change in qty of prop mod HCE's due to reduced # of thrusters; same change as SECN 459. -Change in dimensions reflects post-PDR design mods to enable top connectors and reduce footprint area. (See SECN for power details)	HCE2: Reduce qty from 7 to 6 Change dim's from 4 x 4 x 2 to 2.8 x 5 x 6.8
					X	D	Comm, RWA Sensor, Power EM's, DAS		HCE2: dim's from 4 x 4 x 2 to 2.8 x 5 x 6.8
					X	M,P,D	Prop Mod		HCE4: Reduce qty from 5 to 4 Change dim's from 6 x 6 x 1.5 to 2.8 x 5 x 6.8
					X	D	S/C		HCE2: dim's from 4 x 4 x 2 to 2.8 x 5 x 6.8 HCE3: dim's from 6.5 x 4.6 x 2.4 to 2.8 x 5 x 6.8
469	S. Raymus	5/14/93	E	A 5/14/93	X	M	Power EM	-Update EM structure weights to reflect design maturity. -Change Sensor EM shell and DAS panel kinematic mounts to the standard type due to loads. -Decrease Recorder EM kin. mount qty from 6 to 5 due to inaccessibility of 1 mount.	Power EM Structure: Mass (est) from 123 to 128 lb
					X	M	Hexbay Panel		Hex Bay Battery Panel Structure: Mass (est) from 30 to 35 lb
					X	M	Sensor EM		Sensor EM Struct: Mass (est) from 60.5 to 65.5 lb Sensor EM Mounts-b: Mass (est) from 1.5 ea to 2.5 lb ea.
					X	M	Rec EM		Rec EM Structure: Mass (est) from 86 to 91 lb Rec EM Mounts: Qty from 6 to 5
					X	M	Comm EM		Comm EM Structure: Mass (est) from 41 to 46 lb
					X	M	DAS Panel		DAS Panel Structure: Mass (est) from 12 to 17 lb DAS Panel Mounts: Mass (est) from 1.0 to 2.5 lb ea
470	S. Raymus	5/14/93	E	A 5/14/93	X	M	Sensor EM	Star Tracker Bracket mass was never included in Mass & Power report.	Add Star Tracker Bracket to Sensor EM: Mass (est) = 5.0 lb; acc class = 3; alloc = 5.5 lb

SECN LOG (Mechanical Engr) *(last updated: 6/8/93)*

SECN	Originator	In-Date	Est/ Alloc	STATUS: Approve Reject Withdraw	Incorp In Master	AFFECTS: Mass,Dim, Power,Loc, Thermal	Equipment Location	REASON FOR CHANGE	CHANGE
471	S. Raymus	5/14/93	E	A 5/14/93	X	M	S/C Assy (Sec. Struct.)	Close-out panels weights were never reflected in M & P report.	Add mass (92.0 lb) for close-out panels to Sec. Str.: mass est from 58 lb (per SECN 448) to 150 lb
472	H. Bond	5/18/93	N/A	A	N/A	T	Various (Thermal Control Subsystem)	(This SECN replaces SECN 421 which was withdrawn.) To update temperature requirements and add the non-operational qualification temperature range to the CDD Report.	(See SECN for details)
473	N. Sauers	5/18/93	E,A	A	X	M	HGA Assy	Additional support needed to support HGA deployment.	Increase the weight estimate and allocation of the HGA Support System in the Structure and Mechanism Subsystem.
474	K. Smith	5/24/93	A	A	N/A	M	HGA Assy	Customer compliance at contract award.	Increase HGA Assembly allocation from 200 lbs to 225 lbs.
475	K. Smith	5/19/93	N/A	A	N/A	N/A	N/A	Name change: Change ~Core Harness" in the CDD to "Core Harness Brackets" for clarification.	No change to model.
476	H. Bond	5/93	N/A	A	N/A	T	N/A	Required for baseline freeze.	Update temperature ranges in the CDD section of the Structure & Mechanism Subsystem.

SECN's from 294 to 476 are included in the master model representing the baseline design which will be presented at the September '93 PDR

DCC080393

20001390
30 July 1993

(This page intentionally left blank.)

APPENDIX II

20 MASS PROPERTIES REPORT–PDR BASELINE STOWED

PDR BASELINE
CONFIGURATION = STOWED

Name	..CG, in System Axes (in).. X	Y	Z	.....Inertias, local @ CG, in System Axes (lb-in^2)..... Ixx	Iyy	Izz	Ixy	Iyz	Ixz	(lb) Mass
"Spacecraft-Stowed Configuration with Contingency"										
BASELINE	105.2482	1.5904	-2.5407	1.7302e+07	6.8186e+07	6.4380e+07	1.061e+05	-2.686e+05	2.861e+06	10885.030
"Primary Structure"										
PS TOP ASSY	112.2700	-0.3526	-1.4703	1.6956e+06	7.9326e+06	8.5317e+06	3.136e+04	-7.915e+03	-2.414e+05	1583.700
.EOS LONGERON ASSY	96.2070	0.0244	-1.6811	3.1044e+05	9.4372e+05	1.0579e+06	6.809e+02	-6.192e+01	-3.660e+04	209.340
..BAY 1 LONGERON ASSY	25.7500	0.0000	0.0000	1.0400e+05	6.6213e+04	6.7755e+04	0.000e+00	0.000e+00	0.000e+00	69.120
...BAY 1 LONGERON	25.7500	33.8250	18.9500	1.7192e+01	2.5056e+03	2.5056e+03	0.000e+00	0.000e+00	0.000e+00	11.520
...BAY 1 LONGERON	25.7500	-33.8250	18.9500	1.7192e+01	2.5056e+03	2.5056e+03	0.000e+00	0.000e+00	0.000e+00	11.520
...BAY 1 LONGERON	25.7500	33.8250	-18.9500	1.7192e+01	2.5056e+03	2.5056e+03	0.000e+00	0.000e+00	0.000e+00	11.520
...BAY 1 LONGERON	25.7500	-33.8250	-18.9500	1.7192e+01	2.5056e+03	2.5056e+03	0.000e+00	0.000e+00	0.000e+00	11.520
...BAY 1 LONGERON	25.7500	-0.0000	38.7700	1.7192e+01	2.5056e+03	2.5056e+03	0.000e+00	0.000e+00	0.000e+00	11.520
...BAY 1 LONGERON	25.7500	0.0000	-38.7700	1.7192e+01	2.5056e+03	2.5056e+03	0.000e+00	0.000e+00	0.000e+00	11.520
..BAY 2 LONGERON ASSY	79.5000	0.0000	0.0000	7.6139e+04	3.1197e+04	7.0919e+04	0.000e+00	0.000e+00	0.000e+00	50.600
...BAY 2 LONGERON	79.5000	33.8250	18.9500	1.8879e+01	3.2565e+03	3.2565e+03	0.000e+00	0.000e+00	0.000e+00	12.650
...BAY 2 LONGERON	79.5000	-33.8250	18.9500	1.8879e+01	3.2565e+03	3.2565e+03	0.000e+00	0.000e+00	0.000e+00	12.650
...BAY 2 LONGERON	79.5000	33.8250	-18.9500	1.8879e+01	3.2565e+03	3.2565e+03	0.000e+00	0.000e+00	0.000e+00	12.650
...BAY 2 LONGERON	79.5000	-33.8250	-18.9500	1.8879e+01	3.2565e+03	3.2565e+03	0.000e+00	0.000e+00	0.000e+00	12.650
..BAY 3 LONGERON ASSY	127.0000	0.0000	0.0000	5.3027e+04	1.7034e+04	4.4698e+04	0.000e+00	0.000e+00	0.000e+00	35.240
...BAY 3 LONGERON	127.0000	33.8250	18.9500	1.3148e+01	1.0948e+03	1.0948e+03	0.000e+00	0.000e+00	0.000e+00	8.810
...BAY 3 LONGERON	127.0000	-33.8250	18.9500	1.3148e+01	1.0948e+03	1.0948e+03	0.000e+00	0.000e+00	0.000e+00	8.810
...BAY 3 LONGERON	127.0000	33.8250	-18.9500	1.3148e+01	1.0948e+03	1.0948e+03	0.000e+00	0.000e+00	0.000e+00	8.810
...BAY 3 LONGERON	127.0000	-33.8250	-18.9500	1.3148e+01	1.0948e+03	1.0948e+03	0.000e+00	0.000e+00	0.000e+00	8.810
..BAY 4 LONGERON ASSY	160.7500	0.0000	0.0000	3.8039e+04	1.0749e+04	3.0594e+04	0.000e+00	0.000e+00	0.000e+00	25.280
...BAY 4 LONGERON	160.7500	33.8250	18.9500	9.4319e+00	4.1762e+02	4.1762e+02	0.000e+00	-1.740e-11	0.000e+00	6.320
...BAY 4 LONGERON	160.7500	-33.8250	18.9500	9.4319e+00	4.1762e+02	4.1762e+02	0.000e+00	1.740e-11	0.000e+00	6.320
...BAY 4 LONGERON	160.7500	33.8250	-18.9500	9.4319e+00	4.1762e+02	4.1762e+02	0.000e+00	1.740e-11	0.000e+00	6.320
...BAY 4 LONGERON	160.7500	-33.8250	-18.9500	9.4319e+00	4.1762e+02	4.1762e+02	0.000e+00	-1.740e-11	0.000e+00	6.320
..BAY 5 LONGERON ASSY	192.7500	0.0000	-11.5680	2.8593e+04	5.2172e+03	2.7953e+04	3.885e-10	0.000e+00	0.000e+00	22.420
...BAY 5 LONGERON -Z	192.7500	33.8250	-18.9500	1.1790e+01	8.1235e+02	8.1235e+02	0.000e+00	0.000e+00	0.000e+00	7.900
...BAY 5 LONGERON +Z	192.7500	33.8250	6.0500	9.0732e-01	3.3835e+02	3.3835e+02	0.000e+00	0.000e+00	0.000e+00	3.310
...BAY 5 LONGERON -Z	192.7500	-33.8250	-18.9500	1.1790e+01	8.1235e+02	8.1235e+02	0.000e+00	0.000e+00	0.000e+00	7.900
...BAY 5 LONGERON +Z	192.7500	-33.8250	6.0500	9.0732e-01	3.3835e+02	3.3835e+02	0.000e+00	0.000e+00	0.000e+00	3.310
..BAY 6 LONGERON ASSY	221.0700	0.7651	-13.8570	6.9479e+03	5.3700e+02	6.9084e+03	4.281e+01	3.060e-01	-6.096e-04	6.680
...BAY 6 LONGERON +Z,-Y	221.1300	-29.2720	-5.4500	9.7137e+00	5.0050e+01	5.9120e+01	2.117e+01	0.000e+00	0.000e+00	1.320
...BAY 6 LONGERON +Z,+Y	221.0000	33.8250	-5.4500	5.8478e-01	4.4392e+01	4.4392e+01	0.000e+00	0.000e+00	0.000e+00	1.200
...BAY 6 LONGERON -Z,-Y	221.1300	-29.2720	-18.9500	1.6594e+01	8.3003e+01	9.7937e+01	3.485e+01	0.000e+00	0.000e+00	2.180
...BAY 6 LONGERON -Z,+Y	221.0000	33.8250	-18.9500	1.5076e+00	7.3519e+01	7.3519e+01	0.000e+00	0.000e+00	0.000e+00	1.980
.EOS BHD STRUT ASSY	103.2600	-0.2999	-0.5644	2.5026e+05	1.5702e+06	1.6196e+06	1.802e+03	6.373e+01	-2.147e+04	277.910
..BHD 1 STRUT ASSY	-0.0000	0.0000	0.0000	6.0166e+04	2.9828e+04	3.0374e+04	0.000e+00	3.822e+00	0.000e+00	48.020
...D2.5 224WALL 37.9IN	-0.0000	33.8250	0.0000	9.4744e+02	9.4744e+02	6.0077e+00	0.000e+00	0.000e+00	0.000e+00	7.890
...D2.5 224WALL 38.71IN	-0.0000	16.9150	28.8610	1.0352e+03	2.6925e+02	7.7207e+02	0.000e+00	-4.489e+02	0.000e+00	8.060
...D2.5 224WALL 37.9IN	-0.0000	-33.8250	0.0000	9.4744e+02	9.4744e+02	6.0077e+00	0.000e+00	0.000e+00	0.000e+00	7.890
...D2.5 224WALL 38.71IN	-0.0000	-16.9050	28.8630	1.0352e+03	2.6912e+02	7.7220e+02	0.000e+00	4.488e+02	0.000e+00	8.060
...D2.5 224WALL 38.71IN	-0.0000	-16.9150	-28.8610	1.0352e+03	2.6925e+02	7.7207e+02	0.000e+00	-4.489e+02	0.000e+00	8.060

PDR BASELINE
CONFIGURATION = STOWED

Name	..CG, in System Axes (in).. X	Y	Z	.....Inertias, local @ CG, in System Axes (lb-in^2)..... Ixx	Iyy	Izz	Ixy	Iyz	Ixz	(lb) Mass
...D2.5 224WALL 38.71IN	-0.0000	16.9050	-28.8630	1.0352e+03	2.6912e+02	7.7220e+02	C.000e+00	4.488e+02	0.000e+00	8.060
..BHD 2 STRUT ASSY	51.5000	-0.4434	0.1692	7.9612e+04	4.0148e+04	3.9512e+04	2.514e-05	-1.017e+01	-3.714e-05	77.980
...D2.0 168WALL 67.65IN	51.5000	-0.0000	18.9500	3.1522e+03	4.0252e+00	3.1522e+03	C.000e+00	0.000e+00	0.000e+00	8.260
...D1.5 112WALL 50.8IN	51.5000	16.9130	0.0004	5.8317e+02	3.2494e+02	2.5897e+02	C.000e+00	2.893e+02	0.000e+00	2.710
...D1.5 112WALL 37.9IN	51.5000	0.0000	-0.0000	2.8042e+02	2.8042e+02	6.4143e-01	-9.242e-06	4.399e-05	-2.401e-05	2.340
...D1.5 112WALL 36.36IN	51.5000	-16.8380	12.5280	2.5371e+02	3.2766e+01	2.2157e+02	C.000e+00	8.426e+01	0.000e+00	2.300
...D1.5 112WALL 41.81IN	51.5000	-17.0130	-6.3754	3.5723e+02	1.2664e+02	2.3127e+02	C.000e+00	-1.704e+02	0.000e+00	2.450
...D1.5 112WALL 19.82IN	51.5000	0.0000	-28.8630	5.9859e+01	5.9859e+01	4.9889e-01	C.000e+00	0.000e+00	0.000e+00	1.820
...D2.0 168WALL 67.65IN	51.5000	-0.0000	-18.9500	3.1522e+03	4.0252e+00	3.1522e+03	C.000e+00	0.000e+00	0.000e+00	8.260
...D1.5 112WALL 19.82IN	51.5000	0.0000	28.8630	5.9859e+01	5.9859e+01	4.9889e-01	C.000e+00	0.000e+00	0.000e+00	1.820
...D2.5 224WALL 37.9IN	51.5000	33.8250	0.0000	9.4744e+02	9.4744e+02	6.0077e+00	C.000e+00	0.000e+00	0.000e+00	7.890
...D2.5 224WALL 37.9IN	51.5000	-33.8250	0.0000	9.4744e+02	9.4744e+02	6.0077e+00	C.000e+00	0.000e+00	0.000e+00	7.890
...D2.5 224WALL 38.71IN	51.5000	16.9100	28.8650	1.0352e+03	2.6923e+02	7.7209e+02	0.000e+00	-4.489e+02	0.000e+00	8.060
...D2.5 224WALL 38.71IN	51.5000	-16.9100	28.8640	1.0352e+03	2.6925e+02	7.7207e+02	C.000e+00	4.489e+02	0.000e+00	8.060
...D2.5 224WALL 38.71IN	51.5000	-16.9100	-28.8650	1.0352e+03	2.6923e+02	7.7209e+02	C.000e+00	-4.489e+02	0.000e+00	8.060
...D2.5 224WALL 38.71IN	51.5000	16.9100	-28.8640	1.0352e+03	2.6925e+02	7.7207e+02	C.000e+00	4.489e+02	0.000e+00	8.060
..BHD 3 STRUT ASSY	107.5000	-0.9866	0.3768	2.7292e+04	8.2067e+03	1.9100e+04	-3.091e-05	-3.244e+00	-1.574e-05	35.040
...D2.0 168WALL 67.65IN	107.5000	-0.0000	18.9500	3.1522e+03	4.0252e+00	3.1522e+03	C.000e+00	0.000e+00	0.000e+00	8.260
...D1.5 112WALL 50.8IN	107.5000	16.9130	0.0004	5.8317e+02	3.2494e+02	2.5897e+02	C.000e+00	2.893e+02	0.000e+00	2.710
...D1.5 112WALL 37.9IN	107.5000	0.0000	-0.0000	2.8042e+02	2.8042e+02	6.4143e-01	-9.242e-06	4.399e-05	-2.401e-05	2.340
...D1.5 112WALL 36.36IN	107.5000	-16.8380	12.5280	2.5371e+02	3.2766e+01	2.2157e+02	0.000e+00	8.426e+01	0.000e+00	2.300
...D1.5 112WALL 41.81IN	107.5000	-17.0130	-6.3754	3.5723e+02	1.2664e+02	2.3127e+02	0.000e+00	-1.704e+02	0.000e+00	2.450
...D2.0 168WALL 67.65IN	107.5000	-0.0000	-18.9500	3.1522e+03	4.0252e+00	3.1522e+03	0.000e+00	0.000e+00	0.000e+00	8.260
...D2.00 168WALL 37.9IN	107.5000	33.8260	0.0007	5.2296e+02	5.2296e+02	2.1247e+00	0.000e+00	0.000e+00	0.000e+00	4.360
...D2.00 168WALL 37.9IN	107.5000	-33.8240	0.0007	5.2296e+02	5.2296e+02	2.1247e+00	C.000e+00	0.000e+00	0.000e+00	4.360
..BHD 4 STRUT ASSY	146.5000	-0.9868	0.3766	2.7292e+04	8.2067e+03	1.9100e+04	-3.092e-05	-3.248e+00	-1.574e-05	35.040
...D2.0 168WALL 67.65IN	146.5000	-0.0000	18.9500	3.1522e+03	4.0252e+00	3.1522e+03	C.000e+00	0.000e+00	0.000e+00	8.260
...D1.5 112WALL 50.8IN	146.5000	16.9130	0.0004	5.8317e+02	3.2494e+02	2.5897e+02	2.985e-11	2.893e+02	0.000e+00	2.710
...D1.5 112WALL 37.9IN	146.5000	0.0000	-0.0000	2.8042e+02	2.8042e+02	6.4143e-01	-9.242e-06	4.399e-05	-2.401e-05	2.340
...D1.5 112WALL 41.81IN	146.5000	-17.0130	-6.3754	3.5723e+02	1.2664e+02	2.3127e+02	C.000e+00	-1.704e+02	0.000e+00	2.450
...D2.0 168WALL 67.65IN	146.5000	-0.0000	-18.9500	3.1522e+03	4.0252e+00	3.1522e+03	0.000e+00	0.000e+00	0.000e+00	8.260
...D2.00 168WALL 37.9IN	146.5000	33.8250	0.0000	5.2296e+02	5.2296e+02	2.1247e+00	0.000e+00	0.000e+00	0.000e+00	4.360
...D2.00 168WALL 37.9IN	146.5000	-33.8250	0.0000	5.2296e+02	5.2296e+02	2.1247e+00	0.000e+00	0.000e+00	0.000e+00	4.360
...D1.5 112WALL 36.36IN	146.5000	-16.8380	12.5280	2.5371e+02	3.2766e+01	2.2157e+02	0.000e+00	8.426e+01	0.000e+00	2.300
..BHD 6 STRUT ASSY	210.5000	0.1306	-5.0109	2.5027e+04	4.2949e+03	2.0753e+04	0.000e+00	2.649e+01	-4.795e-10	41.150
...D2.00 168WALL 25.0IN	210.5000	33.8250	-6.4500	1.8995e+02	1.8995e+02	1.7689e+00	0.000e+00	0.000e+00	0.000e+00	3.630
...D1.5 112WALL 36.42IN	210.5000	16.9120	-12.2000	2.5454e+02	3.5519e+01	2.1966e+02	0.000e+00	8.742e+01	0.000e+00	2.300
...D1.5 112WALL 29.41IN	210.5000	7.7458	-6.4500	1.5165e+02	1.0974e+02	4.2487e+01	0.000e+00	6.764e+01	0.000e+00	2.100
...D1.5 112WALL 27.64IN	210.5000	-5.8908	-6.4510	1.3079e+02	1.0712e+02	2.4234e+01	0.000e+00	-5.022e+01	0.000e+00	2.050
...D1.5 112WALL 24.86IN	210.5000	-22.8050	0.2996	1.0173e+02	2.2190e+01	8.0078e+01	0.000e+00	4.150e+01	0.000e+00	1.970
...D1.5 112WALL 21.64IN	210.5000	24.6570	0.3006	7.3231e+01	2.1045e+01	5.2699e+01	0.000e+00	-3.273e+01	0.000e+00	1.870
...D1.5 112WALL 36.42IN	210.5000	-16.9120	-12.2000	2.5454e+02	3.5519e+01	2.1966e+02	0.000e+00	-8.742e+01	0.000e+00	2.300
...D2.00 168WALL 25.0IN	210.5000	-33.8250	-6.4500	1.8995e+02	1.8995e+02	1.7689e+00	0.000e+00	0.000e+00	0.000e+00	3.630
...D2.5 280WALL 67.65IN	210.5000	-0.0000	6.0500	4.9781e+03	9.9290e+00	4.9781e+03	0.000e+00	0.000e+00	0.000e+00	13.040
...D2.0 168WALL 67.65IN	210.5000	-0.0000	-18.9500	3.1522e+03	4.0252e+00	3.1522e+03	0.000e+00	0.000e+00	0.000e+00	8.260
..BHD 5 STRUT ASSY	175.0000	0.3691	0.2400	2.9847e+04	8.8716e+03	2.0992e+04	-1.054e-05	1.523e+02	-2.374e-05	40.680
...D2.0 168WALL 67.65IN	175.0000	-0.0000	18.9500	3.1522e+03	4.0252e+00	3.1522e+03	0.000e+00	0.000e+00	0.000e+00	8.260
...D1.5 112WALL 41.81IN	175.0000	16.8120	-6.5246	3.5723e+02	1.2664e+02	2.3127e+02	0.000e+00	1.704e+02	0.000e+00	2.450
...D1.5 112WALL 37.93IN	175.0000	0.7999	-0.0019	2.8206e+02	2.8156e+02	1.1448e+00	-1.054e-05	1.186e+01	-2.374e-05	2.350
...D1.5 112WALL 41.81IN	175.0000	-17.0130	-6.3754	3.5723e+02	1.2664e+02	2.3127e+02	0.000e+00	-1.704e+02	0.000e+00	2.450
...D2.0 168WALL 67.65IN	175.0000	-0.0000	-18.9500	3.1522e+03	4.0252e+00	3.1522e+03	0.000e+00	0.000e+00	0.000e+00	8.260
...D2.00 168WALL 37.9IN	175.0000	33.8250	0.0000	5.2296e+02	5.2296e+02	2.1247e+00	0.000e+00	0.000e+00	0.000e+00	4.360
...D2.00 168WALL 37.9IN	175.0000	-33.8250	0.0000	5.2296e+02	5.2296e+02	2.1247e+00	0.000e+00	0.000e+00	0.000e+00	4.360
...D1.5 112WALL 21.28IN	175.0000	-25.3630	12.5000	5.6810e+01	2.1136e+01	3.6086e+01	0.000e+00	2.719e+01	0.000e+00	1.500
...D1.5 112WALL 19.44IN	175.0000	26.5480	12.5020	5.7250e+01	2.5474e+01	3.2272e+01	0.000e+00	-2.817e+01	0.000e+00	1.810
...D1.5 112WALL 41.50IN	175.0000	-8.4497	-0.0015	3.4478e+02	2.8770e+02	5.7737e+01	0.000e+00	-1.280e+02	0.000e+00	2.400
...D1.5 112WALL 42.52IN	175.0000	9.6375	-0.0001	3.7398e+02	2.9727e+02	7.7393e+01	0.000e+00	1.508e+02	0.000e+00	2.480
.EOS BAY DIAGONALS	119.1100	-0.2170	-1.2344	4.1675e+05	1.6816e+06	1.8785e+06	-7.428e+03	-1.007e+03	-5.083e+04	403.680

DCC080393

20001390
30 July 1993

PDR BASELINE
CONFIGURATION = STOWED

Name	..CG, in System Axes (in).. X	Y	Z	.....Inertias, local @ CG, in System Axes (lb-in^2)..... Ixx	Iyy	Izz	Ixy	Iyz	Ixz	(lb) Mass
..BAY 1 DIAGONALS	25.7480	-0.0005	0.0003	8.8960e+04	5.9611e+04	6.0739e+04	-2.986e-01	-2.188e-01	3.824e+03	70.980
...D2.5 280WALL 64.72IN	25.7480	16.9110	28.8630	1.5263e+03	3.0150e+03	3.7564e+03	1.720e+03	-6.619e+02	-1.008e+03	11.860
...D2.5 280WALL 63.94IN	25.7480	33.9240	0.0009	1.4164e+03	4.0144e+03	2.6070e+03	-1.494e-01	-1.099e-01	1.912e+03	11.770
...D2.5 280WALL 63.94IN	25.7480	-33.8260	0.0009	1.4164e+03	4.0144e+03	2.6070e+03	-1.494e-01	-1.099e-01	1.912e+03	11.770
...D2.5 280WALL 64.72IN	25.7480	-16.9110	28.8630	1.5263e+03	3.0150e+03	3.7564e+03	-1.720e+03	6.619e+02	-1.008e+03	11.860
...D2.5 280WALL 64.72IN	25.7480	-16.9110	-28.8630	1.5263e+03	3.0150e+03	3.7564e+03	-1.720e+03	-6.619e+02	1.008e+03	11.860
...D2.5 280WALL 64.72IN	25.7480	16.9110	-28.8630	1.5263e+03	3.0150e+03	3.7564e+03	1.720e+03	6.619e+02	1.008e+03	11.860
..BAY 2 DIAGONALS	79.5000	0.0004	-0.0001	9.7914e+04	5.1881e+04	9.9709e+04	-9.415e-02	4.747e-04	-8.745e+03	102.640
...D3.5 392WALL 67.62IN	79.5000	33.8250	-0.0001	2.9962e+03	9.4568e+03	6.4976e+03	8.382e-07	2.828e-04	-4.372e+03	24.770
...D2.5 224WALL 65.42IN	79.4990	16.9130	18.9500	1.0156e+03	2.7698e+03	3.7774e+03	-1.668e+03	0.000e+00	0.000e+00	10.580
...D3.5 392WALL 67.62IN	79.5000	-33.8250	-0.0001	2.9962e+03	9.4568e+03	6.4976e+03	8.382e-07	2.828e-04	-4.372e+03	24.770
...D2.5 224WALL 65.42IN	79.4990	-16.9110	18.9500	1.0158e+03	2.7697e+03	3.7774e+03	1.668e+03	0.000e+00	0.000e+00	10.580
...D2.5 224WALL 65.42IN	79.4990	16.9130	-18.9500	1.0156e+03	2.7698e+03	3.7774e+03	-1.668e+03	0.000e+00	0.000e+00	10.580
...D2.5 224WALL 65.42IN	79.4990	-16.9110	-18.9500	1.0158e+03	2.7697e+03	3.7774e+03	1.668e+03	0.000e+00	0.000e+00	10.580
...D2.0 168 WALL 56.0IN	79.5000	-0.0000	18.9500	2.6266e+00	1.4099e+03	1.4099e+03	0.000e+00	0.000e+00	0.000e+00	5.390
...D2.0 168 WALL 56.0IN	79.5000	-0.0000	-18.9500	2.6266e+00	1.4099e+03	1.4099e+03	0.000e+00	0.000e+00	0.000e+00	5.390
..BAY 3 DIAGONALS	127.0000	-0.0004	0.0004	7.3513e+04	2.5060e+04	6.6982e+04	2.935e-04	2.137e-04	5.349e+03	72.960
...D3.5 392WALL 54.38IN	127.0000	33.8250	0.0007	2.6315e+03	5.3835e+03	2.7846e+03	4.626e-05	1.110e-04	2.674e+03	21.780
...D2.0 168WALL 51.62IN	127.0000	16.9140	18.9500	4.9194e+02	6.5316e+02	1.1426e+03	-5.643e+02	0.000e+00	0.000e+00	5.140
...D3.5 392WALL 54.38IN	127.0000	-33.8250	0.0007	2.6315e+03	5.3835e+03	2.7846e+03	4.626e-05	1.110e-04	2.674e+03	21.780
...D2.0 168WALL 51.62IN	127.0000	-16.9140	18.9500	4.9194e+02	6.5316e+02	1.1426e+03	5.643e+02	0.000e+00	0.000e+00	5.140
...D2.0 168WALL 51.62IN	127.0000	16.9140	-18.9500	4.9194e+02	6.5316e+02	1.1426e+03	-5.643e+02	0.000e+00	0.000e+00	5.140
...D2.0 168WALL 51.62IN	127.0000	-16.9140	-18.9500	4.9194e+02	6.5316e+02	1.1426e+03	5.643e+02	0.000e+00	0.000e+00	5.140
...D2.0 168WALL 39.0IN	127.0000	-0.0032	18.9500	2.1539e+00	5.6131e+02	5.6131e+02	0.000e+00	0.000e+00	0.000e+00	4.420
...D2.0 168WALL 39.0IN	127.0000	-0.0032	-18.9500	2.1539e+00	5.6131e+02	5.6131e+02	0.000e+00	0.000e+00	0.000e+00	4.420
..BAY 4 DIAGONALS	160.7500	-0.7894	3.3403	7.5563e+04	1.5619e+04	6.8838e+04	-4.519e+02	-8.078e+02	8.288e+02	65.560
...D1.5 112WALL 44.23IN	160.7500	16.9130	-18.9500	2.4075e+02	1.7111e+02	4.1117e+02	-2.023e+02	0.000e+00	0.000e+00	2.520
...D3.0 336WALL 37.91IN	160.7500	33.8250	-6.4496	7.0355e+02	1.5990e+03	9.0997e+02	-3.453e-05	-2.375e-05	7.854e+02	13.290
...D3.0 336WALL 31.28IN	160.7500	33.8250	12.5010	1.8124e+02	1.0006e+03	8.3274e+02	-7.117e-06	2.144e-05	-3.709e+02	12.190
...D3.0 336WALL 31.28IN	160.7500	-33.8250	12.5010	1.8124e+02	1.0006e+03	8.3274e+02	-7.117e-06	2.144e-05	-3.709e+02	12.190
...D3.0 336WALL 37.91IN	160.7500	-33.8250	-6.4496	7.0355e+02	1.5990e+03	9.0997e+02	-3.453e-05	-2.375e-05	7.854e+02	13.290
...D1.5 112WALL 44.23IN	160.7500	-16.9130	-18.9500	2.4075e+02	1.7111e+02	4.1117e+02	2.023e+02	0.000e+00	0.000e+00	2.520
...D2.0 168WALL 56.84IN	160.7500	9.2349	18.9500	1.0941e+03	3.6910e+02	1.4606e+03	-6.324e+02	0.000e+00	0.000e+00	5.420
...D2.0 168WALL 33.95IN	160.7500	-24.5900	18.9500	1.1929e+02	2.8139e+02	3.9866e+02	1.810e+02	0.000e+00	0.000e+00	4.140
..BAY 5 DIAGONALS	192.7500	0.1805	-6.3455	6.2004e+04	1.3943e+04	6.2433e+04	-6.473e+02	-1.111e+02	-4.028e+02	68.380
...D1.5 112WALL 77.58IN	192.7500	-0.0010	-12.2000	1.3885e+03	4.2155e+02	1.7028e+03	-7.002e+02	-2.663e+02	1.397e+02	3.500
...D2.0 168WALL 37.98IN	192.7500	33.8210	-12.2010	6.8377e+01	5.2637e+02	4.6012e+02	1.001e-01	3.808e-02	1.742e+02	4.370
...D3.0 336WALL 37.31IN	192.7500	33.8250	0.2990	1.5909e+02	1.5373e+03	1.3927e+03	-1.019e-06	-1.873e-05	-4.465e+02	13.190
...D3.0 336WALL 37.31IN	192.7500	-33.8250	0.2990	1.5909e+02	1.5373e+03	1.3927e+03	-1.019e-06	-1.873e-05	-4.465e+02	13.190
...D2.0 168WALL 37.98IN	192.7500	-33.8290	-12.2010	6.8377e+01	5.2637e+02	4.6012e+02	1.001e-01	3.808e-02	1.742e+02	4.370
...D2.5 224WALL 49.03IN	192.7500	16.9130	-18.9500	9.0610e+02	9.9780e+02	1.8967e+03	-9.436e+02	0.000e+00	0.000e+00	9.450
...D2.5 224WALL 49.03IN	192.7500	-16.9190	-18.9500	9.0675e+02	9.9714e+02	1.8967e+03	9.437e+02	0.000e+00	0.000e+00	9.450
...D2.0 168WALL 41.79IN	192.7600	-22.8020	6.0490	2.2014e+02	5.6676e+02	7.8428e+02	3.503e+02	1.893e-02	3.048e-02	5.380
...D2.0 168WALL 39.96IN	192.7600	24.6560	6.0490	1.5597e+02	5.7724e+02	7.3054e+02	-2.968e+02	-1.604e-02	3.105e-02	5.480
..BAY 6 DIAGONALS	220.5900	-2.0787	-12.2380	1.2333e+04	1.8184e+03	1.2348e+04	-1.985e+02	-3.175e+02	-8.130e+01	23.160
...D2.0 168WALL 26.77IN	221.1200	-29.2730	-12.2000	8.3890e+01	1.9800e+02	1.6725e+02	5.989e+01	-3.805e+01	-8.880e+01	3.730
...D2.0 168WALL 42.95IN	221.1200	15.1620	-5.4500	5.3544e+02	1.7507e+02	7.0826e+02	-3.036e+02	0.000e+00	0.000e+00	4.600
...D2.0 168WALL 37.03IN	221.1200	-18.6630	-5.4500	3.3092e+02	1.6356e+02	4.9238e+02	2.304e+02	0.000e+00	0.000e+00	4.300
...D2.0 168WALL 32.30IN	221.1200	21.6630	-18.9500	2.0260e+02	1.5509e+02	3.5571e+02	-1.753e+02	0.000e+00	0.000e+00	4.080
...D2.0 168WALL 48.26IN	221.1200	-12.1620	-18.9500	7.7573e+02	1.8845e+02	9.6176e+02	3.793e+02	0.000e+00	0.000e+00	4.950
...D1.5 112WALL 17.36IN	212.8800	28.9120	-12.2000	3.5072e+01	2.5875e+01	1.5218e+01	-5.802e+00	-1.649e+01	7.973e+00	1.500
.BHD NODE ASSY	106.5100	-1.0406	-0.9552	6.9031e+05	2.8640e+06	3.0318e+06	7.651e+03	-4.061e+03	-6.060e+04	536.000
..BHD 1 NODE ASSY	1.0889	0.0000	-0.1061	1.4319e+05	7.1248e+04	7.3638e+04	-6.309e-04	0.000e+00	-1.148e+01	96.000
...NODE 1A	1.0693	33.6210	18.7730	9.8024e+01	1.8952e+02	1.8945e+02	-5.890e-01	-4.965e-01	-5.118e-01	16.000
...NODE 1B	1.0693	-33.6210	18.7730	9.8024e+01	1.8952e+02	1.8945e+02	5.890e-01	4.965e-01	-5.118e-01	16.000
...NODE 1C	1.0855	33.6990	-19.0910	1.0897e+02	2.0083e+02	1.8741e+02	-3.306e-01	-3.550e+00	-3.725e-01	16.000
...NODE 1D	1.0855	-33.6990	-19.0910	1.0897e+02	2.0083e+02	1.8741e+02	3.306e-01	3.550e+00	-3.725e-01	16.000
...NODE 1E	1.1120	-0.0000	38.3770	9.6554e+01	1.9830e+02	1.8545e+02	0.000e+00	0.000e+00	-1.196e+00	16.000

PDR BASELINE
CONFIGURATION = STOWED

Name	..CG, in System Axes (in).. X	Y	Z	.....Inertias, local @ CG, in System Axes (lb-in^2)..... Ixx	Iyy	Izz	Ixy	Iyz	Ixz	(lb) Mass
...NODE 1F	1.1120	0.0000	-38.3770	9.6554e+01	1.9830e+02	1.8545e+02	0.000e+00	0.000e+00	1.196e+00	16.000
..BHD 2 NODE ASSY	51.5000	-1.8450	0.3300	1.4532e+05	6.2404e+04	8.6228e+04	-4.998e-03	-1.161e+03	-4.918e-05	110.000
...NODE 2A	51.5000	33.8250	18.9500	8.8853e+01	3.2209e+02	3.2209e+02	0.000e+00	0.000e+00	0.000e+00	17.000
...NODE 2B	51.5000	-33.8250	18.9500	8.8853e+01	3.2209e+02	3.2209e+02	0.000e+00	0.000e+00	0.000e+00	17.000
...NODE 2C	51.5000	33.8250	-18.9500	8.8853e+01	3.7389e+02	3.7389e+02	0.000e+00	0.000e+00	0.000e+00	17.000
...NODE 2D	51.5000	-33.8250	-18.9500	8.8853e+01	4.0709e+02	4.0709e+02	0.000e+00	0.000e+00	0.000e+00	17.000
...NODE 2E	49.5000	-0.0000	38.7750	5.2267e+01	7.9467e+01	7.9467e+01	0.000e+00	0.000e+00	0.000e+00	10.000
...NODE 2F	49.5000	-0.0000	-38.7750	5.2267e+01	7.9467e+01	7.9467e+01	0.000e+00	0.000e+00	0.000e+00	10.000
...NODE 2AB	54.0000	0.0000	18.9500	3.7573e+01	7.4907e+01	7.0667e+01	0.000e+00	0.000e+00	0.000e+00	8.000
...NODE 2CD	54.0000	0.0000	-18.9500	3.7573e+01	7.4907e+01	7.0667e+01	0.000e+00	0.000e+00	0.000e+00	8.000
...NODE 2BD	51.5000	-33.8250	6.0500	4.7680e+01	4.7680e+01	3.1360e+01	0.000e+00	0.000e+00	0.000e+00	6.000
..BHD 3 NODE ASSY	107.5000	-2.2875	0.4146	1.1526e+05	3.1848e+04	8.5789e+04	-4.064e+00	-1.236e+03	2.301e+00	90.000
...NODE 3A	107.5000	33.8250	18.9500	7.9843e+01	2.7023e+02	2.6122e+02	0.000e+00	0.000e+00	0.000e+00	17.000
...NODE 3B	107.5100	-33.9970	19.0100	8.6563e+01	3.2770e+02	3.2562e+02	-3.453e-01	-3.216e+00	1.201e-01	17.000
...NODE 3C	107.5000	33.8250	-18.9500	7.9843e+01	2.7023e+02	2.6122e+02	0.000e+00	0.000e+00	0.000e+00	17.000
...NODE 3D	107.5000	-33.8250	-18.9500	8.8853e+01	2.7023e+02	2.7023e+02	0.000e+00	0.000e+00	0.000e+00	17.000
...NODE 3AB	107.5000	0.0000	18.9500	3.7573e+01	1.2717e+02	1.2293e+02	0.000e+00	0.000e+00	0.000e+00	8.000
...NODE 3CD	107.5000	0.0000	-18.9500	3.7573e+01	1.2717e+02	1.2293e+02	0.000e+00	0.000e+00	0.000e+00	8.000
...NODE 3BD	107.5000	-33.8250	6.0500	4.7680e+01	4.7680e+01	3.1360e+01	0.000e+00	0.000e+00	0.000e+00	6.000
..BHD 4 NODE ASSY	146.7700	-2.2984	0.3943	1.1529e+05	3.1926e+04	8.6042e+04	-7.638e+02	-1.196e+03	4.381e+02	90.000
...NODE 4A	146.5000	33.8250	18.9500	7.9843e+01	3.2209e+02	3.1308e+02	0.000e+00	0.000e+00	0.000e+00	17.000
...NODE 4B	147.9300	-34.0550	18.9020	8.6869e+01	4.7228e+02	4.7593e+02	5.565e+00	-3.571e+00	-1.023e+01	17.000
...NODE 4C	146.5000	33.8250	-18.9500	7.9843e+01	3.2209e+02	3.1308e+02	0.000e+00	0.000e+00	0.000e+00	17.000
...NODE 4D	146.5000	-33.8250	-18.9500	7.9843e+01	3.2209e+02	3.1308e+02	0.000e+00	0.000e+00	0.000e+00	17.000
...NODE 4AB	146.5000	-0.0000	18.9500	6.3573e+01	3.7573e+01	5.9333e+01	0.000e+00	0.000e+00	0.000e+00	8.000
...NODE 4CD	146.5000	0.0000	-18.9500	6.3573e+01	3.7573e+01	5.9333e+01	0.000e+00	0.000e+00	0.000e+00	8.000
...NODE 4BD	146.5000	-33.8250	6.0500	4.4500e+01	4.4500e+01	2.5000e+01	0.000e+00	0.000e+00	0.000e+00	6.000
..BHD 5 NODE ASSY	174.9700	0.2264	-0.8977	1.0561e+05	2.9001e+04	7.8851e+04	-2.827e+01	3.955e+02	-7.324e+02	88.000
...NODE 5A	172.3100	33.8250	18.9500	4.6967e+01	9.9376e+01	9.4076e+01	0.000e+00	0.000e+00	0.000e+00	10.000
...NODE 5B	172.3100	-33.8250	18.9500	3.8467e+01	9.0876e+01	9.4076e+01	0.000e+00	0.000e+00	0.000e+00	10.000
...NODE 5C	175.0000	33.8250	-18.9500	7.9843e+01	1.6894e+02	1.5993e+02	0.000e+00	-4.681e-11	0.000e+00	17.000
...NODE 5D	175.0000	-33.8250	-18.9500	7.9843e+01	1.6894e+02	1.5993e+02	0.000e+00	4.681e-11	0.000e+00	17.000
...NODE 5AB	175.0000	1.6000	18.9500	2.4773e+01	2.4773e+01	2.1333e+01	0.000e+00	0.000e+00	0.000e+00	8.000
...NODE 5CD	175.0000	0.0000	-18.9500	8.7573e+01	3.7573e+01	8.3333e+01	0.000e+00	0.000e+00	0.000e+00	8.000
...NODE 5BD	179.3700	-33.8250	6.0500	3.1325e+01	1.7744e+02	1.6894e+02	0.000e+00	0.000e+00	0.000e+00	6.000
...NODE 5AC	179.3700	33.8250	6.0500	3.1325e+01	1.7744e+02	1.6894e+02	0.000e+00	0.000e+00	0.000e+00	6.000
...NODE 5AB1	174.5000	19.2750	18.9500	1.6840e+01	1.1840e+01	1.3000e+01	0.000e+00	0.000e+00	0.000e+00	3.000
...NODE 5AB3	175.0000	-16.9000	18.9500	1.4290e+01	9.2900e+00	1.3000e+01	0.000e+00	0.000e+00	0.000e+00	3.000
..BHD 6 NODE ASSY	210.3100	0.6125	-8.5790	6.0680e+04	7.1346e+03	5.4221e+04	5.078e+02	2.468e+02	-2.177e+02	62.000
...NODE 6A	208.7500	33.8250	6.0500	1.5483e+01	3.2254e+01	3.0104e+01	0.000e+00	0.000e+00	0.000e+00	5.000
...NODE 6B	208.7500	-33.8250	6.0500	1.5483e+01	3.2254e+01	3.0104e+01	0.000e+00	0.000e+00	0.000e+00	5.000
...NODE 6C	210.5000	33.8250	-18.9500	4.6967e+01	7.3008e+01	6.7708e+01	0.000e+00	0.000e+00	0.000e+00	10.000
...NODE 6D	210.5000	-33.8250	-18.9500	4.6967e+01	7.3008e+01	6.7708e+01	0.000e+00	0.000e+00	0.000e+00	10.000
...NODE 6CD	210.0000	-0.0000	-18.9500	6.3573e+01	3.7573e+01	5.9333e+01	0.000e+00	0.000e+00	0.000e+00	8.000
...NODE 6BD	210.0000	-33.8250	-5.4500	5.9333e+01	5.9333e+01	3.3333e+01	0.000e+00	0.000e+00	0.000e+00	8.000
...NODE 6AC	210.0000	33.8250	-5.4500	4.4500e+01	4.4500e+01	2.5000e+01	0.000e+00	0.000e+00	0.000e+00	6.000
...NODE 6AB1	210.0000	15.4910	6.0500	3.5540e+01	9.2900e+00	3.4250e+01	0.000e+00	0.000e+00	0.000e+00	3.000
...NODE 6AB2	210.0000	-11.7830	6.0500	3.5540e+01	9.2900e+00	3.4250e+01	0.000e+00	0.000e+00	0.000e+00	3.000
...NODE SL620	215.5000	23.6250	-5.4500	1.6667e+01	1.6667e+01	1.6667e+01	0.000e+00	0.000e+00	0.000e+00	4.000
.BHD 7 PNL ASSY	231.7500	4.0289	-12.5100	1.9690e+04	1.7108e+03	1.8072e+04	0.000e+00	-1.228e+02	0.000e+00	52.630
..PNL 7 FACE SHT	231.7500	4.0289	-12.5100	1.9690e+04	1.7108e+03	1.8072e+04	0.000e+00	-1.228e+02	0.000e+00	52.630
.CG BLOCK	111.3800	-0.4500	-1.4500	1.7348e+01	1.7348e+01	1.7348e+01	0.000e+00	0.000e+00	0.000e+00	104.090
"Secondary Structure"										
CORE STR BRACKETS	128.0000	0.0000	0.0000	0.0000e+00	5.1102e-09	5.1102e-09	0.000e+00	0.000e+00	0.000e+00	58.000

DCC080393

20001390
30 July 1993

PDR BASELINE
CONFIGURATION = STOWED

Name	..CG, in System Axes (in).. X	Y	Z	.....Inertias, local @ CG, in System Axes (lb-in^2)..... Ixx	Iyy	Izz	Ixy	Iyz	Ixz	(lb) Mass
"Harness"										
INSTRUMENT HARNESS	152.6400	6.8100	14.6100	0.0000e+00	7.0222e-09	7.0222e-09	0.000e+00	0.000e+00	0.000e+00	79.700
CORE HARNESS	112.2700	-0.3526	-1.4703	0.0000e+00	0.0000e+00	0.0000e+00	0.000e+00	0.000e+00	0.000e+00	116.800
EM HARNESS	85.6450	5.3765	-35.9750	0.0000e+00	0.0000e+00	0.0000e+00	0.000e+00	0.000e+00	0.000e+00	291.400
S AND KU CABLES	112.2700	-0.3526	-1.4703	0.0000e+00	0.0000e+00	0.0000e+00	0.000e+00	0.000e+00	0.000e+00	8.000
SIGNAL REF PLANE	112.2700	-0.3526	-1.4703	0.0000e+00	0.0000e+00	0.0000e+00	0.000e+00	0.000e+00	0.000e+00	10.000
XBAND CABLE AND WG	112.2700	-0.3526	-1.4703	0.0000e+00	0.0000e+00	0.0000e+00	0.000e+00	0.000e+00	0.000e+00	4.500
PRA_VOL	143.3100	-20.9270	-32.4730	1.3034e+02	1.2144e+02	1.2312e+02	0.000e+00	0.000e+00	2.047e+01	9.780
"Thermal"										
EM CCHPS MLI MISC	70.4320	9.1241	-39.9860	0.0000e+00	0.0000e+00	0.0000e+00	0.000e+00	0.000e+00	0.000e+00	69.700
MISC THERMAL	128.0000	0.0000	0.0000	0.0000e+00	0.0000e+00	0.0000e+00	0.000e+00	0.000e+00	0.000e+00	15.160
S/C MLI	128.0000	0.0000	0.0000	0.0000e+00	0.0000e+00	0.0000e+00	0.000e+00	0.000e+00	0.000e+00	31.680
S/C HCES	128.0000	0.0000	0.0000	0.0000e+00	0.0000e+00	0.0000e+00	0.000e+00	0.000e+00	0.000e+00	17.400
"S-Band Omni"										
S-BAND W/BOOM	182.8800	-19.6250	46.3000	3.0608e+02	3.0608e+02	5.9537e-01	0.000e+00	-7.588e-13	0.000e+00	1.675
.S-BAND OMNI	182.8800	-19.6250	55.3760	0.0000e+00	0.0000e+00	0.0000e+00	0.000e+00	0.000e+00	0.000e+00	1.000
..HOUSING	182.8800	-19.6250	55.3760	0.0000e+00	0.0000e+00	0.0000e+00	0.000e+00	0.000e+00	0.000e+00	1.000
..ANT	0.0000	0.0000	0.0000	0.0000e+00	0.0000e+00	0.0000e+00	0.000e+00	0.000e+00	0.000e+00	0.000
.BOOM	182.8800	-19.6250	32.8540	1.0166e+02	1.0166e+02	5.9537e-01	0.000e+00	0.000e+00	0.000e+00	0.675
S-BAND W/BOOM	200.0000	-11.3750	-55.5410	3.0608e+02	3.0608e+02	5.9537e-01	-3.689e-11	4.553e-12	-7.284e-11	1.675
.S-BAND OMNI	200.0000	-11.3750	-64.6170	0.0000e+00	0.0000e+00	0.0000e+00	0.000e+00	0.000e+00	0.000e+00	1.000
..HOUSING	200.0000	-11.3750	-64.6170	0.0000e+00	0.0000e+00	0.0000e+00	0.000e+00	0.000e+00	0.000e+00	1.000
..ANT	0.0000	0.0000	0.0000	0.0000e+00	0.0000e+00	0.0000e+00	0.000e+00	0.000e+00	0.000e+00	0.000
.BOOM	200.0000	-11.3750	-42.0950	1.0166e+02	1.0166e+02	5.9537e-01	0.000e+00	0.000e+00	0.000e+00	0.675
"DAS antenna"										
DAS	82.8620	-9.8755	47.5350	2.0170e+03	2.0170e+03	9.6966e+00	0.000e+00	0.000e+00	0.000e+00	12.491
.ANTENNA	82.8620	-9.8755	59.2000	0.0000e+00	0.0000e+00	0.0000e+00	0.000e+00	0.000e+00	0.000e+00	5.000
.POLE	82.8620	-9.8755	39.7500	8.8270e+02	8.8270e+02	9.6966e+00	0.000e+00	0.000e+00	0.000e+00	7.491
"Torque Rods"										
TORQUE ROD SYS1	27.5000	-39.8750	-0.0000	3.4628e-29	1.5969e-10	1.5969e-10	0.000e+00	0.000e+00	7.436e-20	29.000
.TORQUE ROD	27.5000	-39.8750	-0.0000	3.4628e-29	1.5969e-10	1.5969e-10	0.000e+00	0.000e+00	7.436e-20	29.000
.SUPPORT TR	0.0000	0.0000	0.0000	0.0000e+00	0.0000e+00	0.0000e+00	0.000e+00	0.000e+00	0.000e+00	0.000
.SUPPORT TR2	0.0000	0.0000	0.0000	0.0000e+00	0.0000e+00	0.0000e+00	0.000e+00	0.000e+00	0.000e+00	0.000
.SUPPORT TR3	0.0000	0.0000	0.0000	0.0000e+00	0.0000e+00	0.0000e+00	0.000e+00	0.000e+00	0.000e+00	0.000
TORQUE ROD SYS1	-3.2500	0.0000	-59.0000	0.0000e+00	2.4952e-12	2.4952e-12	0.000e+00	0.000e+00	0.000e+00	29.000
.TORQUE ROD	-3.2500	0.0000	-59.0000	0.0000e+00	2.4952e-12	2.4952e-12	0.000e+00	0.000e+00	0.000e+00	29.000
.SUPPORT TR	0.0000	0.0000	0.0000	0.0000e+00	0.0000e+00	0.0000e+00	0.000e+00	0.000e+00	0.000e+00	0.000
.SUPPORT TR2	0.0000	0.0000	0.0000	0.0000e+00	0.0000e+00	0.0000e+00	0.000e+00	0.000e+00	0.000e+00	0.000
.SUPPORT TR3	0.0000	0.0000	0.0000	0.0000e+00	0.0000e+00	0.0000e+00	0.000e+00	0.000e+00	0.000e+00	0.000

PDR BASELINE
CONFIGURATION = STOWED

Name	..CG, in System Axes (in).. X	Y	Z	.....Inertias, local @ CG, in System Axes (lb-in^2)..... Ixx	Iyy	Izz	Ixy	Iyz	Ixz	(lb) Mass
TORQUE ROD SYS1	2.2500	-39.8750	0.0000	0.0000e+00	0.0000e+00	0.0000e+00	0.000e+00	0.000e+00	0.000e+00	29.000
.TORQUE ROD	2.2500	-39.8750	0.0000	0.0000e+00	0.0000e+00	0.0000e+00	0.000e+00	0.000e+00	0.000e+00	29.000
.SUPPORT TR	0.0000	0.0000	0.0000	0.0000e+00	0.0000e+00	0.0000e+00	0.000e+00	0.000e+00	0.000e+00	0.000
.SUPPORT TR2	0.0000	0.0000	0.0000	0.0000e+00	0.0000e+00	0.0000e+00	0.000e+00	0.000e+00	0.000e+00	0.000
.SUPPORT TR3	0.0000	0.0000	0.0000	0.0000e+00	0.0000e+00	0.0000e+00	0.000e+00	0.000e+00	0.000e+00	0.000
"Earth Sensors"										
ESA ICM	23.6870	28.1900	48.8180	0.0000e+00	0.0000e+00	0.0000e+00	0.000e+00	0.000e+00	0.000e+00	2.200
.ESA BKT ICM	0.0000	0.0000	0.0000	0.0000e+00	0.0000e+00	0.0000e+00	0.000e+00	0.000e+00	0.000e+00	0.000
.EARTH SEN ICM	23.6870	28.1900	48.8180	0.0000e+00	0.0000e+00	0.0000e+00	0.000e+00	0.000e+00	0.000e+00	2.200
ESA ICM	6.3779	-27.4310	48.8180	0.0000e+00	0.0000e+00	0.0000e+00	0.000e+00	0.000e+00	0.000e+00	2.200
.ESA BKT ICM	0.0000	0.0000	0.0000	0.0000e+00	0.0000e+00	0.0000e+00	0.000e+00	0.000e+00	0.000e+00	0.000
.EARTH SEN ICM	6.3779	-27.4310	48.8180	0.0000e+00	0.0000e+00	0.0000e+00	0.000e+00	0.000e+00	0.000e+00	2.200
ESA ELECTRONICS	25.4300	-30.0710	48.3470	0.0000e+00	0.0000e+00	0.0000e+00	0.000e+00	0.000e+00	0.000e+00	5.500
ESA ELECTRONICS	23.6870	2.8380	48.3470	0.0000e+00	0.0000e+00	0.0000e+00	0.000e+00	0.000e+00	0.000e+00	5.500
"Solar Array"										
GAL_ARS_ARRAY	128.1300	-53.9940	1.4829	2.2909e+05	9.7484e+05	7.8404e+05	1.481e+02	2.138e+04	-1.643e+03	453.400
.CAN18_S5	0.0000	0.0000	0.0000	0.0000e+00	0.0000e+00	0.0000e+00	0.000e+00	0.000e+00	0.000e+00	0.000
.SSU8_30_6	0.0000	0.0000	0.0000	0.0000e+00	0.0000e+00	0.0000e+00	0.000e+00	0.000e+00	0.000e+00	0.000
.BASE204_2_16	0.0000	0.0000	0.0000	0.0000e+00	0.0000e+00	0.0000e+00	0.000e+00	0.000e+00	0.000e+00	0.000
.COVER204_2_16	0.0000	0.0000	0.0000	0.0000e+00	0.0000e+00	0.0000e+00	0.000e+00	0.000e+00	0.000e+00	0.000
.MAST16_S5	0.0000	0.0000	0.0000	0.0000e+00	0.0000e+00	0.0000e+00	0.000e+00	0.000e+00	0.000e+00	0.000
.BLANKT_STOW_GALARS	0.0000	0.0000	0.0000	0.0000e+00	0.0000e+00	0.0000e+00	0.000e+00	0.000e+00	0.000e+00	0.000
.DEU_MAST	0.0000	0.0000	0.0000	0.0000e+00	0.0000e+00	0.0000e+00	0.000e+00	0.000e+00	0.000e+00	0.000
.CSS4D-N	224.6700	-53.9900	14.3360	6.1796e-01	8.0864e-01	5.9501e-01	8.995e-02	-1.530e-02	-6.231e-02	0.600
..DETCSS	226.2900	-53.7000	13.8350	9.9767e-04	9.7544e-04	8.4679e-04	1.616e-04	-5.792e-05	6.204e-05	0.011
..DETCSS	225.4000	-54.5350	13.5140	9.9767e-04	9.7544e-04	8.4679e-04	1.616e-04	-5.792e-05	6.204e-05	0.011
..DETCSS	224.1000	-54.4850	15.8800	8.2455e-04	1.1135e-03	8.8183e-04	-5.113e-11	1.287e-04	3.260e-11	0.011
..DETCSS	224.1000	-54.9990	14.7230	8.2455e-04	1.1135e-03	8.8183e-04	2.393e-11	1.287e-04	-1.427e-11	0.011
..POS 20DEG BAFFLE	224.1000	-55.0900	14.9740	1.0735e-04	1.5212e-04	2.0003e-04	-9.237e-12	2.834e-06	-4.963e-12	0.002
..POS 20DEG BAFFLE	224.1000	-54.5750	16.1300	1.0735e-04	1.5212e-04	2.0003e-04	-9.237e-12	2.834e-06	-4.963e-12	0.002
..BKTCSS4-N	224.6400	-53.9390	14.3130	5.3056e-01	6.9291e-01	5.0651e-01	7.670e-02	1.601e-04	-2.544e-02	0.542
..FULL BAFFLE	224.1000	-55.1540	14.7920	2.9476e-04	3.6495e-04	3.0867e-04	-1.203e-11	3.125e-05	8.869e-12	0.003
..FULL BAFFLE	224.1000	-54.6390	15.9480	2.9476e-04	3.6495e-04	3.0867e-04	-1.203e-11	3.125e-05	8.869e-12	0.003
..FULL BAFFLE	225.5200	-54.6470	13.4710	3.3681e-04	3.3141e-04	3.0016e-04	3.926e-05	-1.407e-05	1.507e-05	0.003
..FULL BAFFLE	226.4100	-53.8110	13.7920	3.3681e-04	3.3141e-04	3.0016e-04	3.926e-05	-1.407e-05	1.507e-05	0.003
.CSS4D-N	31.3330	-36.8250	20.8610	6.1796e-01	7.2820e-01	6.7545e-01	2.515e-02	-1.046e-01	1.065e-01	0.600
..DETCSS	29.7050	-36.7060	20.2950	9.9767e-04	9.7544e-04	8.4679e-04	1.616e-04	-5.792e-05	6.204e-05	0.011
..DETCSS	30.6000	-35.8700	20.6150	9.9767e-04	9.7544e-04	8.4679e-04	1.616e-04	-5.792e-05	6.204e-05	0.011
..DETCSS	31.8950	-37.4910	22.3390	8.2455e-04	8.8183e-04	1.1135e-03	8.781e-12	-1.287e-04	-3.019e-11	0.011
..DETCSS	31.8950	-36.3350	21.8240	8.2455e-04	8.8183e-04	1.1135e-03	3.320e-11	-1.287e-04	5.486e-11	0.011
..POS 20DEG BAFFLE	31.8950	-36.4350	22.0710	1.0735e-04	1.7075e-04	1.8139e-04	-1.580e-12	2.353e-05	-2.297e-12	0.002
..POS 20DEG BAFFLE	31.8950	-37.5910	22.5860	1.0735e-04	1.7075e-04	1.8139e-04	-1.571e-12	2.353e-05	-2.297e-12	0.002
..BKTCSS4-N	31.3630	-36.8490	20.8100	5.3056e-01	6.0929e-01	5.9013e-01	3.997e-02	-9.271e-02	7.023e-02	0.542
..FULL BAFFLE	31.8950	-36.2660	21.9790	2.9476e-04	3.0867e-04	3.6495e-04	4.315e-12	-3.125e-05	-8.151e-12	0.003
..FULL BAFFLE	31.8950	-37.4220	22.4940	2.9476e-04	3.0867e-04	3.6495e-04	4.315e-12	-3.125e-05	-8.151e-12	0.003
..FULL BAFFLE	30.4800	-35.7590	20.6580	3.3681e-04	3.3141e-04	3.0016e-04	3.926e-05	-1.407e-05	1.507e-05	0.003
..FULL BAFFLE	29.5850	-36.5940	20.3380	3.3681e-04	3.3141e-04	3.0016e-04	3.926e-05	-1.407e-05	1.507e-05	0.003
.CSS4D-N	224.6700	-36.4430	19.8800	6.1796e-01	8.0864e-01	5.9501e-01	-8.995e-02	-1.530e-02	6.231e-02	0.600
..DETCSS	226.2900	-36.7330	20.3810	9.9767e-04	9.7544e-04	8.4679e-04	-1.616e-04	-5.792e-05	-6.204e-05	0.011
..DETCSS	225.4000	-35.8980	20.7010	9.9767e-04	9.7544e-04	8.4679e-04	-1.616e-04	-5.792e-05	-6.204e-05	0.011
..DETCSS	224.1000	-35.9480	18.3360	8.2455e-04	1.1135e-03	8.8183e-04	8.698e-12	1.287e-04	1.764e-12	0.011
..DETCSS	224.1000	-35.4340	19.4920	8.2455e-04	1.1135e-03	8.8183e-04	-6.636e-11	1.287e-04	4.863e-11	0.011
..POS 20DEG BAFFLE	224.1000	-35.3430	19.2420	1.0735e-04	1.5212e-04	2.0003e-04	1.141e-12	2.834e-06	1.177e-13	0.002

DCC080393

20001390
30 July 1993

PDR BASELINE
CONFIGURATION = STOWED

Name	..CG, in System Axes (in).. X	Y	Z	.....Inertias, local @ CG, in System Axes (lb-in^2)..... Ixx	Iyy	Izz	Ixy	Iyz	Ixz	(lb) Mass
..POS 20DEG BAFFLE	224.1000	-35.8580	18.0860	1.0735e-04	1.5212e-04	2.0003e-04	1.141e-12	2.834e-06	1.177e-13	0.002
..BKTCSS4-N	224.6400	-36.4940	19.9020	5.3056e-01	6.9291e-01	5.0651e-01	-7.670e-02	1.601e-04	2.544e-02	0.542
..FULL BAFFLE	224.1000	-35.2790	19.4240	2.9476e-04	3.6495e-04	3.0867e-04	2.892e-12	3.125e-05	7.274e-13	0.003
..FULL BAFFLE	224.1000	-35.7940	18.2670	2.9476e-04	3.6495e-04	3.0867e-04	2.892e-12	3.125e-05	7.274e-13	0.003
..FULL BAFFLE	225.5200	-35.7860	20.7440	3.3681e-04	3.3141e-04	3.0016e-04	-3.926e-05	-1.407e-05	-1.507e-05	0.003
..FULL BAFFLE	226.4100	-36.6210	20.4240	3.3681e-04	3.3141e-04	3.0016e-04	-3.926e-05	-1.407e-05	-1.507e-05	0.003
.CSS4D-N	31.3330	-53.6130	13.3560	6.1796e-01	7.2896e-01	6.7469e-01	-2.554e-02	-1.044e-01	-1.064e-01	0.600
..DETCSS	29.7050	-53.7300	13.9230	9.9767e-04	9.7585e-04	8.4637e-04	-1.618e-04	-5.746e-05	-6.146e-05	0.011
..DETCSS	30.6000	-54.5670	13.6050	9.9767e-04	9.7585e-04	8.4637e-04	-1.618e-04	-5.746e-05	-6.146e-05	0.011
..DETCSS	31.8950	-52.9530	11.8760	8.2455e-04	8.8276e-04	1.1126e-03	-5.477e-11	-1.295e-04	-8.931e-11	0.011
..DETCSS	31.8950	-54.1070	12.3940	8.2455e-04	8.8276e-04	1.1126e-03	-7.950e-11	-1.295e-04	-1.743e-10	0.011
..POS 20DEG BAFFLE	31.8950	-54.0080	12.1480	1.0735e-04	1.7058e-04	1.8156e-04	-2.054e-11	2.349e-05	-2.920e-12	0.002
..POS 20DEG BAFFLE	31.8950	-52.8530	11.6290	1.0735e-04	1.7058e-04	1.8156e-04	-2.054e-11	2.349e-05	-2.920e-12	0.002
..BKTCSS4-N	31.3630	-53.5900	13.4070	5.3056e-01	6.0996e-01	5.8946e-01	-4.022e-02	-9.264e-02	-7.008e-02	0.542
..FULL BAFFLE	31.8950	-54.1770	12.2400	2.9476e-04	3.0890e-04	3.6472e-04	-1.531e-11	-3.145e-05	-2.242e-11	0.003
..FULL BAFFLE	31.8950	-53.0220	11.7210	2.9476e-04	3.0890e-04	3.6472e-04	-1.531e-11	-3.145e-05	-2.242e-11	0.003
..FULL BAFFLE	30.4800	-54.6790	13.5630	3.3681e-04	3.3151e-04	3.0006e-04	-3.931e-05	-1.395e-05	-1.493e-05	0.003
..FULL BAFFLE	29.5850	-53.8420	13.8800	3.3681e-04	3.3151e-04	3.0006e-04	-3.931e-05	-1.395e-05	-1.493e-05	0.003
.NEW SAD HINGE	0.0000	0.0000	0.0000	0.0000e+00	0.0000e+00	0.0000e+00	0.000e+00	0.000e+00	0.000e+00	0.000
.MASSPROPS_STOW	128.1300	-54.0410	1.3997	2.2811e+05	9.5180e+05	7.6125e+05	1.505e+02	2.099e+04	-1.638e+03	451.000
SA HARNESS	128.0000	-54.0000	1.0000	0.0000e+00	0.0000e+00	0.0000e+00	0.000e+00	0.000e+00	0.000e+00	5.700
SAD_ASSY_9_1	128.0000	-22.3790	-44.2200	1.3569e+03	8.1787e+02	1.3569e+03	0.000e+00	0.000e+00	0.000e+00	79.000
.SHAFT_EXTENSION	0.0000	0.0000	0.0000	0.0000e+00	0.0000e+00	0.0000e+00	0.000e+00	0.000e+00	0.000e+00	0.000
.DRIVE_HOUSING	0.0000	0.0000	0.0000	0.0000e+00	0.0000e+00	0.0000e+00	0.000e+00	0.000e+00	0.000e+00	0.000
.MOTOR_DRIVE_PLATE	0.0000	0.0000	0.0000	0.0000e+00	0.0000e+00	0.0000e+00	0.000e+00	0.000e+00	0.000e+00	0.000
.HARMONIC_DRIVE	0.0000	0.0000	0.0000	0.0000e+00	0.0000e+00	0.0000e+00	0.000e+00	0.000e+00	0.000e+00	0.000
.STEPPER_MOTOR	0.0000	0.0000	0.0000	0.0000e+00	0.0000e+00	0.0000e+00	0.000e+00	0.000e+00	0.000e+00	0.000
.COVER_PLATE	0.0000	0.0000	0.0000	0.0000e+00	0.0000e+00	0.0000e+00	0.000e+00	0.000e+00	0.000e+00	0.000
.COVER_PLATE	0.0000	0.0000	0.0000	0.0000e+00	0.0000e+00	0.0000e+00	0.000e+00	0.000e+00	0.000e+00	0.000
.COVER_PLATE	0.0000	0.0000	0.0000	0.0000e+00	0.0000e+00	0.0000e+00	0.000e+00	0.000e+00	0.000e+00	0.000
.COVER_PLATE	0.0000	0.0000	0.0000	0.0000e+00	0.0000e+00	0.0000e+00	0.000e+00	0.000e+00	0.000e+00	0.000
.PTA_HOUSING	128.0000	-22.3790	-44.2200	1.3569e+03	8.1787e+02	1.3569e+03	0.000e+00	0.000e+00	0.000e+00	79.000
.SAD_MTG_BKT_LR	0.0000	0.0000	0.0000	0.0000e+00	0.0000e+00	0.0000e+00	0.000e+00	0.000e+00	0.000e+00	0.000
.SAD_MTG_BKT_LF	0.0000	0.0000	0.0000	0.0000e+00	0.0000e+00	0.0000e+00	0.000e+00	0.000e+00	0.000e+00	0.000
.SAD_MTG_BKT_RR	0.0000	0.0000	0.0000	0.0000e+00	0.0000e+00	0.0000e+00	0.000e+00	0.000e+00	0.000e+00	0.000
.SAD_MTG_BKT_RF	0.0000	0.0000	0.0000	0.0000e+00	0.0000e+00	0.0000e+00	0.000e+00	0.000e+00	0.000e+00	0.000
.SAD_MOUNTING_FOOT	0.0000	0.0000	0.0000	0.0000e+00	0.0000e+00	0.0000e+00	0.000e+00	0.000e+00	0.000e+00	0.000
.SAD_MOUNTING_FOOT	0.0000	0.0000	0.0000	0.0000e+00	0.0000e+00	0.0000e+00	0.000e+00	0.000e+00	0.000e+00	0.000
.SAD_MOUNTING_FOOT	0.0000	0.0000	0.0000	0.0000e+00	0.0000e+00	0.0000e+00	0.000e+00	0.000e+00	0.000e+00	0.000
.SAD_MOUNTING_FOOT	0.0000	0.0000	0.0000	0.0000e+00	0.0000e+00	0.0000e+00	0.000e+00	0.000e+00	0.000e+00	0.000
"Solar Array Support Hardware"										
S/A BOX SUPPT. SYS	206.7000	-37.2040	-3.4835	5.1378e+02	5.1756e+02	7.6792e+00	-7.136e-01	6.795e-01	2.570e+00	3.116
.SA FL_POLE THRU FIT	206.3700	-37.0070	6.0500	7.0061e-01	2.6187e+00	2.8217e+00	-2.638e-01	0.000e+00	0.000e+00	0.746
.SA FL_POLE BASE FIT	206.4800	-36.9970	-18.7100	1.0825e+00	3.0284e+00	2.9687e+00	-2.590e-01	-3.997e-02	-1.231e-01	0.908
.FLAGPOLE	207.0000	-37.5750	-0.9500	1.4837e+02	1.4837e+02	1.1775e+00	0.000e+00	0.000e+00	0.000e+00	1.310
.BATHTUB FITTING	207.0000	-36.2000	18.9500	1.1441e-01	1.6412e-01	5.1289e-02	0.000e+00	0.000e+00	0.000e+00	0.151
SAD_STRUC_SYS	128.0700	-21.1260	-25.9390	4.5579e+03	4.9902e+03	7.7087e+03	6.817e-04	-2.650e+01	7.241e-03	36.001
.SAD BASEPLATE	128.0700	-17.9870	-22.2500	1.7202e+03	2.2580e+03	3.9755e+03	0.000e+00	0.000e+00	0.000e+00	16.418
.SAD_SUPT_+X	139.9700	-20.9270	-29.5230	1.4109e+02	9.1646e+01	1.2579e+02	0.000e+00	0.000e+00	4.489e+01	3.496
.SAD_SUPT_-X	116.1700	-20.9270	-29.5230	1.4109e+02	9.1646e+01	1.2579e+02	0.000e+00	0.000e+00	-4.489e+01	3.496
.SAD_TOPPLATE	128.0700	-20.9270	-36.7970	6.7805e+01	4.2615e+01	1.0997e+02	0.000e+00	0.000e+00	0.000e+00	2.705
.SAD Y PANEL	128.0700	-12.7570	-28.3820	4.8891e+01	2.3253e+02	1.8421e+02	0.000e+00	0.000e+00	0.000e+00	3.474
.SAD Y PANEL	128.0700	-29.0980	-28.3820	4.8891e+01	2.3253e+02	1.8421e+02	0.000e+00	0.000e+00	0.000e+00	3.474
.SAD CAN SUPPT_B11	128.0700	-39.7950	-22.2480	2.6219e+01	3.3719e+02	3.6292e+02	0.000e+00	-7.149e-03	0.000e+00	2.937

PDR BASELINE
CONFIGURATION = STOWED

Name	..CG, in System Axes (in).. X	Y	Z	.....Inertias, local @ CG, in System Axes (lb-in^2)..... Ixx	Iyy	Izz	Ixy	Iyz	Ixz	(lb) Mass
"HGA Assembly"										
HGA SYSTEM	237.9600	-3.6417	-24.4640	5.5293e+04	1.9599e+05	2.0304e+05	-8.884e+01	-1.261e+02	2.974e+03	285.500
.SHORT BOOM 8/5/92	186.4800	-3.5000	-26.5310	1.1828e+01	6.6274e+03	6.6260e+03	0.000e+00	0.000e+00	9.665e+01	9.500
.HINGE_VOL	140.7500	-3.5000	-27.2000	1.7225e+02	1.9325e+02	2.2100e+02	0.000e+00	0.000e+00	0.000e+00	12.000
.HGA (VENDOR DATA)	244.6000	-3.6568	-24.3800	5.4816e+04	3.8381e+04	4.5700e+04	1.798e+02	-1.227e+02	-1.174e+03	258.000
..DISH-4.5-SPAR	0.0000	0.0000	0.0000	0.0000e+00	0.0000e+00	0.0000e+00	0.000e+00	0.000e+00	0.000e+00	0.000
..RF BOX-SPAR	0.0000	0.0000	0.0000	0.0000e+00	0.0000e+00	0.0000e+00	0.000e+00	0.000e+00	0.000e+00	0.000
..GIMBAL-COMPACT	0.0000	0.0000	0.0000	0.0000e+00	0.0000e+00	0.0000e+00	0.000e+00	0.000e+00	0.000e+00	0.000
..HYBRID-SPAR	0.0000	0.0000	0.0000	0.0000e+00	0.0000e+00	0.0000e+00	0.000e+00	0.000e+00	0.000e+00	0.000
..HGA SUPPT-CYL	0.0000	0.0000	0.0000	0.0000e+00	0.0000e+00	0.0000e+00	0.000e+00	0.000e+00	0.000e+00	0.000
..HGA MASSPROPS ST	245.3700	-3.6700	-25.0800	4.7740e+04	3.3915e+04	3.9289e+04	2.111e+02	-1.510e+02	4.940e+02	238.000
...-Z RELEASE ASSY	235.2100	-21.5000	-23.1210	2.1327e+01	2.8290e+01	3.6603e+01	0.000e+00	0.000e+00	-7.561e+00	5.000
....-Z NODE BRACKET	233.6400	-21.5000	-22.4370	8.5227e+00	9.3405e+00	1.4220e+01	0.000e+00	0.000e+00	-2.763e+00	2.500
....BOX BRACKET	236.7700	-21.5000	-23.8040	1.0471e+01	4.3132e+00	1.0079e+01	0.000e+00	0.000e+00	5.592e-01	2.500
...-Z RELEASE ASSY	235.2100	14.5000	-23.1210	2.1327e+01	2.8290e+01	3.6603e+01	0.000e+00	0.000e+00	-7.561e+00	5.000
....-Z NODE BRACKET	233.6400	14.5000	-22.4370	8.5227e+00	9.3405e+00	1.4220e+01	0.000e+00	0.000e+00	-2.763e+00	2.500
....BOX BRACKET	236.7700	14.5000	-23.8040	1.0471e+01	4.3132e+00	1.0079e+01	0.000e+00	0.000e+00	5.592e-01	2.500
...+Z RELEASE ASSY	235.6000	7.5000	-8.9724	3.8347e+01	3.4622e+01	2.6759e+01	5.520e-11	-2.845e-12	-1.002e+01	5.000
....BOX BRACKET	236.7700	7.5000	-10.3040	1.0471e+01	4.3132e+00	1.0079e+01	0.000e+00	0.000e+00	5.592e-01	2.500
....+Z NODE BRACKET	234.4300	7.5000	-7.6413	1.9016e+01	1.4574e+01	9.8046e+00	0.000e+00	0.000e+00	-2.772e+00	2.500
...+Z RELEASE ASSY	235.6000	-14.5000	-8.9724	3.8347e+01	3.4622e+01	2.6759e+01	-3.440e-06	3.905e-06	-1.002e+01	5.000
....BOX BRACKET	236.7700	-14.5000	-10.3040	1.0471e+01	4.3132e+00	1.0079e+01	0.000e+00	0.000e+00	5.592e-01	2.500
....+Z NODE BRACKET	234.4300	-14.5000	-7.6413	1.9016e+01	1.4574e+01	9.8046e+00	0.000e+00	0.000e+00	-2.772e+00	2.500
.MIDBOOM RESTR MASS	228.3900	-3.5000	-19.3220	1.0000e+00	1.0000e+00	1.0000e+00	0.000e+00	0.000e+00	0.000e+00	6.000
HGA HARNESS	186.4800	-3.5000	-26.5310	0.0000e+00	0.0000e+00	0.0000e+00	0.000e+00	0.000e+00	0.000e+00	2.800
HGA S & KU CABLES	186.4800	-3.5000	-26.5310	0.0000e+00	0.0000e+00	0.0000e+00	0.000e+00	0.000e+00	0.000e+00	3.200
"Power EM"										
PMAD4_26_ICM	27.2280	13.0620	-47.6690	3.2416e+05	2.0718e+05	4.0141e+05	-1.675e+04	3.446e+04	-6.518e+03	600.500
.PMAD_VOL_COMP	0.0000	0.0000	0.0000	0.0000e+00	0.0000e+00	0.0000e+00	0.000e+00	0.000e+00	0.000e+00	0.000
.PMAD_MP_COMP	27.2660	13.3960	-48.1480	3.0339e+05	1.9050e+05	3.7734e+05	-1.705e+04	3.821e+04	-6.093e+03	585.500
.1-AXIS KM POWER TAPE	0.0000	-33.8250	-22.3670	3.1208e+00	3.1208e+00	4.0644e+00	0.000e+00	0.000e+00	0.000e+00	2.500
.1-AXIS KM POWER TAPE	0.0000	-0.0000	-42.2060	3.1208e+00	3.1208e+00	4.0644e+00	0.000e+00	0.000e+00	0.000e+00	2.500
.3-AXIS KM POWER TAPE	0.0000	33.8250	-22.3670	3.1208e+00	3.1208e+00	4.0644e+00	0.000e+00	0.000e+00	0.000e+00	2.500
.1-AXIS KM POWER TAPE	51.5000	-33.8250	-22.3670	3.1208e+00	3.1208e+00	4.0644e+00	0.000e+00	0.000e+00	0.000e+00	2.500
.1-AXIS KM POWER TAPE	51.5000	-0.0000	-42.2060	3.1208e+00	3.1208e+00	4.0644e+00	0.000e+00	0.000e+00	0.000e+00	2.500
.2-AXIS KM POWER TAPE	51.5000	33.8250	-22.3670	3.1208e+00	3.1208e+00	4.0644e+00	0.000e+00	0.000e+00	0.000e+00	2.500
""Recorder EM"										
SSREC4_26_ICM	74.9330	3.4039	-49.9430	3.8608e+05	2.1929e+05	4.5772e+05	4.837e+04	3.566e+04	1.561e+04	747.800
.REC_VOL_COMP	0.0000	0.0000	0.0000	0.0000e+00	0.0000e+00	0.0000e+00	0.000e+00	0.000e+00	0.000e+00	0.000
.REC_MP_COMP	74.7540	3.4618	-50.4120	3.6481e+05	2.0985e+05	4.3736e+05	4.882e+04	3.685e+04	1.192e+04	735.300
.2-AXIS KM POWER TAPE	55.7500	-33.8250	-22.3670	3.1208e+00	3.1208e+00	4.0644e+00	0.000e+00	0.000e+00	0.000e+00	2.500
.3-AXIS KM POWER TAPE	55.7500	33.8250	-22.3670	3.1208e+00	3.1208e+00	4.0644e+00	0.000e+00	0.000e+00	0.000e+00	2.500
.1-AXIS KM POWER TAPE	105.2500	-33.8250	-22.3670	3.1208e+00	3.1208e+00	4.0644e+00	0.000e+00	0.000e+00	0.000e+00	2.500
.1-AXIS KM POWER TAPE	105.2500	-0.0000	-22.3670	3.1208e+00	3.1208e+00	4.0644e+00	0.000e+00	0.000e+00	0.000e+00	2.500
.1-AXIS KM POWER TAPE	105.2500	33.8250	-22.3670	3.1208e+00	3.1208e+00	4.0644e+00	0.000e+00	0.000e+00	0.000e+00	2.500
"Sensor EM"										

DCC080393

20001390
30 July 1993

PDR BASELINE
CONFIGURATION = STOWED

Name	..CG, in System Axes (in).. X	Y	Z	.....Inertias, local @ CG, in System Axes (lb-in^2)..... Ixx	Iyy	Izz	Ixy	Iyz	Ixz	(lb) Mass
SENSOR_ICM	141.3600	20.4760	-37.8560	5.0755e+04	1.3346e+05	1.2861e+05	2.710e+03	4.754e+03	9.712e+03	270.730
.SENSOR_VOL_COMP_B_B7	0.0000	0.0000	0.0000	0.0000e+00	0.0000e+00	0.0000e+00	0.000e+00	0.000e+00	0.000e+00	0.000
.SENSOR_MP_COMP	141.1600	20.6200	-39.4650	3.8693e+04	1.0763e+05	1.0212e+05	2.774e+03	5.256e+03	8.999e+03	240.730
.1-AXIS KM VOL TOP MT	109.7500	4.8250	-23.4420	2.1511e-13	0.0000e+00	2.1511e-13	0.000e+00	0.000e+00	0.000e+00	2.500
.3-AXIS KM VOL TOP MT	109.7500	33.8250	-23.4420	0.0000e+00	0.0000e+00	0.0000e+00	0.000e+00	0.000e+00	0.000e+00	2.500
.1-AXIS KM VOL TOP MT	146.5000	4.8250	-23.4420	2.1511e-13	0.0000e+00	2.1511e-13	0.000e+00	0.000e+00	0.000e+00	2.500
.1-AXIS KM VOL TOP MT	146.5000	33.8250	-23.4420	0.0000e+00	0.0000e+00	0.0000e+00	0.000e+00	0.000e+00	0.000e+00	2.500
.1-AXIS KM VOL TOP MT	172.7500	4.8250	-23.4420	2.1511e-13	0.0000e+00	2.1511e-13	0.000e+00	0.000e+00	0.000e+00	2.500
.2-AXIS KM VOL TOP MT	172.7500	33.8250	-23.4420	0.0000e+00	0.0000e+00	0.0000e+00	0.000e+00	0.000e+00	0.000e+00	2.500
.1-AXIS KM VOL BOT MT	109.7500	4.8250	-26.4490	3.1208e+00	3.1208e+00	4.0644e+00	0.000e+00	0.000e+00	0.000e+00	2.500
.1-AXIS KM VOL BOT MT	146.5000	4.8250	-26.4490	3.1208e+00	3.1208e+00	4.0644e+00	0.000e+00	0.000e+00	0.000e+00	2.500
.1-AXIS KM VOL BOT MT	172.7500	4.8250	-26.4490	3.1208e+00	3.1208e+00	4.0644e+00	0.000e+00	0.000e+00	0.000e+00	2.500
.1-AXIS KM VOL BOT MT	146.5000	33.8250	-26.4490	3.1208e+00	3.1208e+00	4.0644e+00	0.000e+00	0.000e+00	0.000e+00	2.500
.3-AXIS KM VOL BOT MT	109.7500	33.8250	-26.4490	3.1208e+00	3.1208e+00	4.0644e+00	0.000e+00	0.000e+00	0.000e+00	2.500
.2-AXIS KM VOL BOT MT	172.7500	33.8250	-26.4490	3.1208e+00	3.1208e+00	4.0644e+00	0.000e+00	0.000e+00	0.000e+00	2.500
.BALL SHADE ICM	0.0000	0.0000	0.0000	0.0000e+00	0.0000e+00	0.0000e+00	0.000e+00	0.000e+00	0.000e+00	0.000
.BALL SHADE ICM	0.0000	0.0000	0.0000	0.0000e+00	0.0000e+00	0.0000e+00	0.000e+00	0.000e+00	0.000e+00	0.000
.CSS2 ICM	0.0000	0.0000	0.0000	0.0000e+00	0.0000e+00	0.0000e+00	0.000e+00	0.000e+00	0.000e+00	0.000
..BRKTCSS-ICM	0.0000	0.0000	0.0000	0.0000e+00	0.0000e+00	0.0000e+00	0.000e+00	0.000e+00	0.000e+00	0.000
..DETCSS-ICM	0.0000	0.0000	0.0000	0.0000e+00	0.0000e+00	0.0000e+00	0.000e+00	0.000e+00	0.000e+00	0.000
..DETCSS-ICM	0.0000	0.0000	0.0000	0.0000e+00	0.0000e+00	0.0000e+00	0.000e+00	0.000e+00	0.000e+00	0.000
"RWA EM"										
RWA4_26_ICM	79.4010	-49.0300	-5.6210	2.1906e+04	7.7316e+04	7.4797e+04	-2.371e+02	-1.863e+03	-3.123e+03	236.900
.RWA_VOL_COMP	0.0000	0.0000	0.0000	0.0000e+00	0.0000e+00	0.0000e+00	0.000e+00	0.000e+00	0.000e+00	0.000
.RWA_MP_COMP	79.3970	-49.5490	-5.5845	1.8873e+04	6.7890e+04	6.5494e+04	-2.493e+02	-1.761e+03	-3.122e+03	226.900
.1-AXIS KM VOL BOT MT	51.5000	-37.2420	6.0500	3.1208e+00	4.0644e+00	3.1208e+00	0.000e+00	0.000e+00	0.000e+00	2.500
.3-AXIS KM VOL BOT MT	51.5000	-37.2420	-18.9500	3.1208e+00	4.0644e+00	3.1208e+00	0.000e+00	6.883e-12	0.000e+00	2.500
.1-AXIS KM VOL BOT MT	107.5000	-37.2420	6.0500	3.1208e+00	4.0644e+00	3.1208e+00	0.000e+00	0.000e+00	0.000e+00	2.500
.2-AXIS KM VOL BOT MT	107.5000	-37.2420	-18.9500	3.1208e+00	4.0644e+00	3.1208e+00	0.000e+00	6.883e-12	0.000e+00	2.500
"DAS Panel"										
DAS_ICM	26.3890	36.3780	30.1430	3.3635e+03	1.6643e+04	1.4361e+04	1.528e+02	-3.965e+01	1.821e+01	63.900
.DAS_VOL_COMP	0.0000	0.0000	0.0000	0.0000e+00	0.0000e+00	0.0000e+00	0.000e+00	0.000e+00	0.000e+00	0.000
.DAS_MP_COMP	26.5450	36.0090	30.5540	1.9602e+03	8.6381e+03	7.6880e+03	1.679e+02	2.510e-01	1.395e+00	51.400
.1-AXIS KM VOL TOP MT	0.0000	37.8950	41.0500	1.3767e-11	0.0000e+00	1.3767e-11	0.000e+00	0.000e+00	0.000e+00	2.500
.3-AXIS KM VOL TOP MT	0.0000	37.8950	20.0500	1.3767e-11	0.0000e+00	1.3767e-11	0.000e+00	0.000e+00	0.000e+00	2.500
.1-AXIS KM VOL TOP MT	25.7500	37.8950	20.0500	1.3767e-11	0.0000e+00	1.3767e-11	0.000e+00	0.000e+00	0.000e+00	2.500
.2-AXIS KM VOL TOP MT	51.5000	37.8950	20.0500	1.3767e-11	0.0000e+00	1.3767e-11	0.000e+00	0.000e+00	0.000e+00	2.500
.1-AXIS KM VOL TOP MT	51.5000	37.8950	41.0500	1.3767e-11	0.0000e+00	1.3767e-11	0.000e+00	0.000e+00	0.000e+00	2.500
"Comm EM"										
COMM3_25_ICM	203.2000	22.6630	-37.0690	3.3703e+04	6.9707e+04	7.2260e+04	-1.069e+03	1.022e+03	-2.173e+03	222.250
.COMM_MP_COMP	203.2300	22.8210	-37.7610	2.9221e+04	6.1063e+04	6.3660e+04	-1.094e+03	1.536e+03	-2.066e+03	212.250
.COMM_VOL_COMP	0.0000	0.0000	0.0000	0.0000e+00	0.0000e+00	0.0000e+00	0.000e+00	0.000e+00	0.000e+00	0.000
.1-AXIS KM VOL TOP MT	177.2500	4.8250	-22.3670	2.1511e-13	0.0000e+00	2.1511e-13	0.000e+00	0.000e+00	0.000e+00	2.500
.3-AXIS KM VOL TOP MT	177.2500	33.8250	-22.3670	0.0000e+00	0.0000e+00	0.0000e+00	0.000e+00	0.000e+00	0.000e+00	2.500
.1-AXIS KM VOL TOP MT	227.7500	4.8250	-22.3670	2.1511e-13	0.0000e+00	2.1511e-13	0.000e+00	0.000e+00	0.000e+00	2.500
.2-AXIS KM VOL TOP MT	227.7500	33.8250	-22.3670	0.0000e+00	0.0000e+00	0.0000e+00	0.000e+00	0.000e+00	0.000e+00	2.500
"Hexbay"										
HEXBAT3_31_ICM	24.4050	34.6950	-1.3715	4.1001e+04	1.1448e+05	7.9528e+04	2.011e+01	2.291e+01	-3.154e+03	345.000
.HEXBAT_VOL_COMP	0.0000	0.0000	0.0000	0.0000e+00	0.0000e+00	0.0000e+00	0.000e+00	0.000e+00	0.000e+00	0.000

PDR BASELINE
CONFIGURATION = STOWED

Name	..CG, in System Axes (in).. X	Y	Z	.....Inertias, local @ CG, in System Axes (lb-in^2)..... Ixx	Iyy	Izz	Ixy	Iyz	Ixz	(lb) Mass
.HEXBAT_MP_COMP	24.3440	34.5400	-1.3680	3.6224e+04	1.0323e+05	7.2685e+04	-5.209e+01	2.713e+01	-3.152e+03	330.000
.3-AXIS KM VOL TOP MT	0.0000	38.1190	16.0500	1.3767e-11	0.0000e+00	1.3767e-11	0.000e+00	0.000e+00	0.000e+00	2.500
.1-AXIS KM VOL TOP MT	0.0000	38.1190	-18.9500	1.3767e-11	0.0000e+00	1.3767e-11	0.000e+00	0.000e+00	0.000e+00	2.500
.2-AXIS KM VOL TOP MT	51.5000	38.1190	16.0500	1.3767e-11	0.0000e+00	1.3767e-11	0.000e+00	0.000e+00	0.000e+00	2.500
.1-AXIS KM VOL TOP MT	51.5000	38.1190	-18.9500	1.3767e-11	0.0000e+00	1.3767e-11	0.000e+00	0.000e+00	0.000e+00	2.500
.1-AXIS KM VOL TOP MT	25.7500	38.1190	16.0500	1.3767e-11	0.0000e+00	1.3767e-11	0.000e+00	0.000e+00	0.000e+00	2.500
.1-AXIS KM VOL TOP MT	25.7500	38.1190	-18.9500	1.3767e-11	0.0000e+00	1.3767e-11	0.000e+00	0.000e+00	0.000e+00	2.500
"SWIR"										
SWIR	165.0800	-11.5760	36.9900	0.0000e+00	0.0000e+00	0.0000e+00	0.000e+00	0.000e+00	0.000e+00	291.100
.SWIR_HOUSING	0.0000	0.0000	0.0000	0.0000e+00	0.0000e+00	0.0000e+00	0.000e+00	0.000e+00	0.000e+00	0.000
.SWIR_MOUNT	0.0000	0.0000	0.0000	0.0000e+00	0.0000e+00	0.0000e+00	0.000e+00	0.000e+00	0.000e+00	0.000
.SWIR_MOUNT	0.0000	0.0000	0.0000	0.0000e+00	0.0000e+00	0.0000e+00	0.000e+00	0.000e+00	0.000e+00	0.000
.SWIR_MOUNT	0.0000	0.0000	0.0000	0.0000e+00	0.0000e+00	0.0000e+00	0.000e+00	0.000e+00	0.000e+00	0.000
.SWIR_MOUNT	0.0000	0.0000	0.0000	0.0000e+00	0.0000e+00	0.0000e+00	0.000e+00	0.000e+00	0.000e+00	0.000
.SWIR_MOUNT	0.0000	0.0000	0.0000	0.0000e+00	0.0000e+00	0.0000e+00	0.000e+00	0.000e+00	0.000e+00	0.000
.SWIR_MOUNT	0.0000	0.0000	0.0000	0.0000e+00	0.0000e+00	0.0000e+00	0.000e+00	0.000e+00	0.000e+00	0.000
.COLD_PLATE	0.0000	0.0000	0.0000	0.0000e+00	0.0000e+00	0.0000e+00	0.000e+00	0.000e+00	0.000e+00	0.000
.SWIR-MP	165.0800	-11.5760	36.9900	0.0000e+00	0.0000e+00	0.0000e+00	0.000e+00	0.000e+00	0.000e+00	291.100
SWIR 2ND STRUCT	156.9100	-6.0127	6.9529	1.8518e+04	8.9430e+03	1.4315e+04	1.521e+02	-1.740e+03	-6.109e+02	44.700
.D2.0 168WALL 53.19IN	164.3700	16.9540	0.3006	1.0376e+03	8.2458e+02	6.0904e+02	2.839e+02	-5.062e+02	-3.508e+02	5.230
.D2.0 168WALL 49.29IN	150.1200	16.9540	0.2999	9.9369e+02	6.2313e+02	4.1670e+02	-9.260e+01	-4.848e+02	1.144e+02	5.010
.D2.0 168WALL 47.21IN	164.3700	-26.1260	0.2998	7.2552e+02	7.7070e+02	3.2500e+02	-1.597e+02	2.847e+02	-3.278e+02	4.890
.D2.0 168WALL 43.56IN	164.3600	0.0403	0.3063	1.5696e-15	1.5696e-15	0.0000e+00	0.000e+00	0.000e+00	0.000e+00	4.670
.D2.0 168WALL 42.77IN	150.1200	-26.1260	0.2996	6.8822e+02	5.7686e+02	1.5408e+02	5.159e+01	2.701e+02	1.059e+02	4.640
.D2.0 168WALL 41.53IN	150.1200	-9.2143	0.3011	6.3801e+02	5.6821e+02	1.1191e+02	-4.231e+01	-2.214e+02	1.044e+02	4.570
.D2.0 168WALL 18.5IN	153.7400	-7.6426	19.2520	9.3772e+01	1.5886e+00	9.3772e+01	0.000e+00	0.000e+00	0.000e+00	3.260
.SWIR MTG FTG	153.7400	1.6074	19.2520	0.0000e+00	0.0000e+00	0.0000e+00	0.000e+00	0.000e+00	0.000e+00	4.510
.SWIR MTG FTG	153.7400	-16.8960	19.2500	6.2088e-12	6.2088e-12	0.0000e+00	0.000e+00	0.000e+00	0.000e+00	4.510
.D2.0 168WALL 21.25IN	164.3700	-16.8930	19.2520	1.6617e+00	1.2915e+02	1.2915e+02	0.000e+00	0.000e+00	0.000e+00	3.410
SWIR KM	164.3700	-16.3710	22.1670	3.1408e+03	1.6950e+03	4.8358e+03	1.273e-05	7.208e-12	5.099e-10	15.000
.3-AXIS KM VOL TOP MT	175.0000	-16.8960	22.1670	0.0000e+00	0.0000e+00	0.0000e+00	0.000e+00	0.000e+00	0.000e+00	2.500
.2-AXIS KM VOL TOP MT	153.7400	-16.8960	22.1670	0.0000e+00	2.2027e-10	2.2027e-10	0.000e+00	0.000e+00	0.000e+00	2.500
.1-AXIS KM VOL TOP MT	153.7400	1.6080	22.1670	0.0000e+00	2.2027e-10	2.2027e-10	0.000e+00	0.000e+00	0.000e+00	2.500
.1-AXIS KM VOL TOP MT	175.0000	1.6080	22.1670	0.0000e+00	0.0000e+00	0.0000e+00	0.000e+00	0.000e+00	0.000e+00	2.500
.1-AXIS KM VOL TOP MT	153.7400	-33.8250	22.1670	0.0000e+00	2.2027e-10	2.2027e-10	0.000e+00	0.000e+00	0.000e+00	2.500
.1-AXIS KM VOL TOP MT	175.0000	-33.8250	22.1670	0.0000e+00	0.0000e+00	0.0000e+00	0.000e+00	0.000e+00	0.000e+00	2.500
"TIR"										
TIR	198.0900	5.0000	22.3800	0.0000e+00	0.0000e+00	0.0000e+00	0.000e+00	0.000e+00	0.000e+00	359.400
.TIR_HOUSING	0.0000	0.0000	0.0000	0.0000e+00	0.0000e+00	0.0000e+00	0.000e+00	0.000e+00	0.000e+00	0.000
.INSTR_COLDPLATE	0.0000	0.0000	0.0000	0.0000e+00	0.0000e+00	0.0000e+00	0.000e+00	0.000e+00	0.000e+00	0.000
.TIR-MP	198.0900	5.0000	22.3800	0.0000e+00	0.0000e+00	0.0000e+00	0.000e+00	0.000e+00	0.000e+00	359.400
TIR 2ND STRUCT	184.0800	-1.3435	-2.0832	1.6524e+04	3.7794e+03	1.7050e+04	-1.858e+01	1.399e+02	-9.518e+01	45.800
.SL555 2X.168 35.13IN	178.0500	-25.3030	-6.4499	0.0000e+00	0.0000e+00	0.0000e+00	0.000e+00	0.000e+00	0.000e+00	4.970
.SL552 2X.168 32.93IN	178.0500	22.1590	-6.4495	0.0000e+00	0.0000e+00	0.0000e+00	0.000e+00	0.000e+00	0.000e+00	4.850
.TIR MTG FTG	183.6100	12.9930	6.0500	0.0000e+00	0.0000e+00	0.0000e+00	0.000e+00	0.000e+00	0.000e+00	8.000
.TIR MTG FTG	183.6100	-14.2830	6.0500	0.0000e+00	0.0000e+00	0.0000e+00	0.000e+00	0.000e+00	0.000e+00	8.000
.SL556 2X.168 41.3IN	195.8000	-25.3040	-6.4508	0.0000e+00	0.0000e+00	0.0000e+00	0.000e+00	0.000e+00	0.000e+00	5.320
.SL554 2X.168 29.79IN	178.0500	-8.3899	-6.4517	0.0000e+00	0.0000e+00	0.0000e+00	0.000e+00	0.000e+00	0.000e+00	4.670
.SL551 2X.168 31.44IN	178.0500	5.2477	-6.4490	0.0000e+00	0.0000e+00	0.0000e+00	0.000e+00	0.000e+00	0.000e+00	4.760
.SL553 2X.168 39.45IN	195.8000	22.1590	-6.4496	0.0000e+00	0.0000e+00	0.0000e+00	0.000e+00	0.000e+00	0.000e+00	5.230
TIR KM	198.3000	0.9265	9.2672	1.3318e+04	2.9753e+03	1.6294e+04	3.055e-04	0.000e+00	0.000e+00	20.000
.1-AXIS KM VOL TOP MT	186.1100	-33.8250	9.2672	0.0000e+00	0.0000e+00	0.0000e+00	0.000e+00	0.000e+00	0.000e+00	2.500
.2-AXIS KM VOL TOP MT	210.5000	15.4910	9.2672	0.0000e+00	0.0000e+00	0.0000e+00	0.000e+00	0.000e+00	0.000e+00	2.500
.2-AXIS KM VOL TOP MT	210.5000	-33.8250	9.2672	0.0000e+00	0.0000e+00	0.0000e+00	0.000e+00	0.000e+00	0.000e+00	2.500

PDR BASELINE
CONFIGURATION = STOWED

Name	..CG, in System Axes (in).. X	Y	Z	.....Inertias, local @ CG, in System Axes (lb-in^2)..... Ixx	Iyy	Izz	Ixy	Iyz	Ixz	(lb) Mass
.1-AXIS KM VOL TOP MT	186.1100	-11.7850	9.2672	0.0000e+00	0.0000e+00	0.0000e+00	0.000e+00	0.000e+00	0.000e+00	2.500
.1-AXIS KM VOL TOP MT	210.5000	-11.7850	9.2672	0.0000e+00	0.0000e+00	0.0000e+00	0.000e+00	0.000e+00	0.000e+00	2.500
.1-AXIS KM VOL TOP MT	186.1100	15.4910	9.2672	0.0000e+00	0.0000e+00	0.0000e+00	0.000e+00	0.000e+00	0.000e+00	2.500
.1-AXIS KM VOL TOP MT	186.1100	33.8250	9.2672	0.0000e+00	0.0000e+00	0.0000e+00	0.000e+00	0.000e+00	0.000e+00	2.500
.2-AXIS KM VOL TOP MT	210.5000	33.8250	9.2672	0.0000e+00	0.0000e+00	0.0000e+00	0.000e+00	0.000e+00	0.000e-00	2.500
"VNIR"										
VNIR	119.5600	13.5400	47.7550	0.0000e+00	1.0300e-08	1.0300e-08	0.000e+00	0.000e+00	0.000e+00	116.900
.VNIR_HOUSING	0.0000	0.0000	0.0000	0.0000e+00	0.0000e+00	0.0000e+00	0.000e+00	0.000e+00	0.000e+00	0.000
.VNIR-MP	119.5600	13.5400	47.7550	0.0000e+00	1.0300e-08	1.0300e-08	0.000e+00	0.000e+00	0.000e+00	116.900
VSR SEC STRUCT	138.8900	20.1410	27.7770	7.7741e+03	2.7199e+04	3.4263e+04	3.409e+03	-2.857e+01	-5.047e+02	82.000
.VSR IMP	136.0100	19.9780	29.2750	2.6542e-10	2.6542e-10	0.0000e+00	0.000e+00	0.000e+00	0.000e+00	48.200
.KM SYS	143.0000	20.3730	27.4920	3.2911e+03	1.1482e+04	1.4774e+04	1.488e+03	0.000e+00	0.000e+00	15.000
..3-AXIS KM VOL TOP MT	107.5000	33.8250	27.4920	0.0000e+00	0.0000e+00	0.0000e+00	0.000e+00	0.000e+00	0.000e+00	2.500
..2-AXIS KM VOL TOP MT	175.0000	33.8250	27.4920	0.0000e+00	0.0000e+00	0.0000e+00	0.000e+00	0.000e+00	0.000e+00	2.500
..1-AXIS KM VOL TOP MT	107.5000	0.7200	27.4920	0.0000e+00	0.0000e+00	0.0000e+00	0.000e+00	0.000e+00	0.000e+00	2.500
..1-AXIS KM VOL TOP MT	146.5000	0.7200	27.4920	0.0000e+00	0.0000e+00	0.0000e+00	0.000e+00	0.000e+00	0.000e+00	2.500
..1-AXIS KM VOL TOP MT	146.5000	33.8250	27.4920	0.0000e+00	0.0000e+00	0.0000e+00	0.000e+00	0.000e+00	0.000e+00	2.500
..1-AXIS KM VOL TOP MT	175.0000	19.3250	27.4920	3.4417e-12	0.0000e+00	3.4417e-12	0.000e+00	0.000e+00	0.000e+00	2.500
.VSR STANDOFF SYS	143.0000	20.3730	24.1630	4.1249e+03	1.4391e+04	1.8516e+04	1.866e+03	2.428e-11	0.000e+00	18.800
..VSR STANDOFF	107.5000	0.7200	24.1630	0.0000e+00	0.0000e+00	0.0000e+00	0.000e+00	0.000e+00	0.000e+00	3.133
..VSR STANDOFF	146.5000	0.7200	24.1630	0.0000e+00	0.0000e+00	0.0000e+00	0.000e+00	0.000e+00	0.000e+00	3.133
..VSR STANDOFF	107.5000	33.8250	24.1630	0.0000e+00	0.0000e+00	0.0000e+00	0.000e+00	0.000e+00	0.000e+00	3.133
..VSR STANDOFF	146.5000	33.8250	24.1630	0.0000e+00	0.0000e+00	0.0000e+00	0.000e+00	0.000e+00	0.000e+00	3.133
..VSR STANDOFF	175.0000	33.8250	24.1630	0.0000e+00	0.0000e+00	0.0000e+00	0.000e+00	0.000e+00	0.000e+00	3.133
..VSR STANDOFF	175.0000	19.3250	24.1630	0.0000e+00	0.0000e+00	0.0000e+00	0.000e+00	0.000e+00	0.000e+00	3.133
"VEL"										
VEL	140.6900	24.9500	39.0050	0.0000e+00	0.0000e+00	0.0000e+00	0.000e+00	0.000e+00	0.000e+00	63.900
.VEL_HOUSING	0.0000	0.0000	0.0000	0.0000e+00	0.0000e+00	0.0000e+00	0.000e+00	0.000e+00	0.000e+00	0.000
.VEL-MP	140.6900	24.9500	39.0050	0.0000e+00	0.0000e+00	0.0000e+00	0.000e+00	0.000e+00	0.000e+00	63.900
"CSP"										
CSP	160.6300	28.5200	38.6850	0.0000e+00	0.0000e+00	0.0000e+00	0.000e+00	0.000e+00	0.000e+00	121.300
.CSP_HOUSING	0.0000	0.0000	0.0000	0.0000e+00	0.0000e+00	0.0000e+00	0.000e+00	0.000e+00	0.000e+00	0.000
.CSP-MP	160.6300	28.5200	38.6850	0.0000e+00	0.0000e+00	0.0000e+00	0.000e+00	0.000e+00	0.000e+00	121.300
"MPS"										
MPS	118.2100	34.2700	37.6650	2.1862e-10	2.1862e-10	0.0000e+00	0.000e+00	0.000e+00	0.000e+00	39.700
.MPS_HOUSING	0.0000	0.0000	0.0000	0.0000e+00	0.0000e+00	0.0000e+00	0.000e+00	0.000e+00	0.000e+00	0.000
.MPS-MP	118.2100	34.2700	37.6650	2.1862e-10	2.1862e-10	0.0000e+00	0.000e+00	0.000e+00	0.000e+00	39.700
"MODIS"										
MODIS_ICM	235.9100	17.0580	16.5760	0.0000e+00	0.0000e+00	0.0000e+00	0.000e+00	0.000e+00	0.000e+00	613.000
.DOOR_SBRC_SIMP	0.0000	0.0000	0.0000	0.0000e+00	0.0000e+00	0.0000e+00	0.000e+00	0.000e+00	0.000e+00	0.000
.MAINFRAME W/HOLES	0.0000	0.0000	0.0000	0.0000e+00	0.0000e+00	0.0000e+00	0.000e+00	0.000e+00	0.000e+00	0.000
.MTG FOOT -Y	0.0000	0.0000	0.0000	0.0000e+00	0.0000e+00	0.0000e+00	0.000e+00	0.000e+00	0.000e+00	0.000
.MTG FOOT +Y	0.0000	0.0000	0.0000	0.0000e+00	0.0000e+00	0.0000e+00	0.000e+00	0.000e+00	0.000e+00	0.000

PDR BASELINE
CONFIGURATION = STOWED

Name	..CG, in System Axes (in).. X	Y	Z	.....Inertias, local @ CG, in System Axes (lb-in^2)..... Ixx	Iyy	Izz	Ixy	Iyz	Ixz	(lb) Mass
.MTG FOOT +Y-X	0.0000	0.0000	0.0000	0.0000e+00	0.0000e+00	0.0000e+00	0.000e+00	0.000e+00	0.000e+00	0.000
.NADIR APERTURE DOOR	0.0000	0.0000	0.0000	0.0000e+00	0.0000e+00	0.0000e+00	0.000e+00	0.000e+00	0.000e+00	0.000
.SOLAR APERTURE DOOR	0.0000	0.0000	0.0000	0.0000e+00	0.0000e+00	0.0000e+00	0.000e+00	0.000e+00	0.000e+00	0.000
.SUNSHADE	0.0000	0.0000	0.0000	0.0000e+00	0.0000e+00	0.0000e+00	0.000e+00	0.000e+00	0.000e+00	0.000
.SCAN MTR	0.0000	0.0000	0.0000	0.0000e+00	0.0000e+00	0.0000e+00	0.000e+00	0.000e+00	0.000e+00	0.000
.MAIN ELECTR MODULE	0.0000	0.0000	0.0000	0.0000e+00	0.0000e+00	0.0000e+00	0.000e+00	0.000e+00	0.000e+00	0.000
.DOOR ACCESS -Y	0.0000	0.0000	0.0000	0.0000e+00	0.0000e+00	0.0000e+00	0.000e+00	0.000e+00	0.000e+00	0.000
.MOTOR_LINKASSY_SIMP	0.0000	0.0000	0.0000	0.0000e+00	0.0000e+00	0.0000e+00	0.000e+00	0.000e+00	0.000e+00	0.000
.HINGE_SIMP	0.0000	0.0000	0.0000	0.0000e+00	0.0000e+00	0.0000e+00	0.000e+00	0.000e+00	0.000e+00	0.000
.HINGE_SIMP2	0.0000	0.0000	0.0000	0.0000e+00	0.0000e+00	0.0000e+00	0.000e+00	0.000e+00	0.000e+00	0.000
.SHROUD_SBRC_SIMP	0.0000	0.0000	0.0000	0.0000e+00	0.0000e+00	0.0000e+00	0.000e+00	0.000e+00	0.000e+00	0.000
.FRAME_SBRC_SIMP	0.0000	0.0000	0.0000	0.0000e-00	0.0000e+00	0.0000e+00	0.000e+00	0.000e+00	0.000e+00	0.000
.HOUSING_SBRC_SIMP	0.0000	0.0000	0.0000	0.0000e-00	0.0000e+00	0.0000e+00	0.000e+00	0.000e+00	0.000e+00	0.000
.PIVOT_SBRC_SIMP	0.0000	0.0000	0.0000	0.0000e+00	0.0000e+00	0.0000e+00	0.000e+00	0.000e+00	0.000e+00	0.000
.HOUSING_SBRC_SIMP	0.0000	0.0000	0.0000	0.0000e-00	0.0000e+00	0.0000e+00	0.000e+00	0.000e+00	0.000e+00	0.000
.PIVOT_SBRC_SIMP	0.0000	0.0000	0.0000	0.0000e+00	0.0000e+00	0.0000e+00	0.000e+00	0.000e+00	0.000e+00	0.000
.MODIS_MASS_COMPONENT	235.9100	17.0580	16.5760	0.0000e+00	0.0000e+00	0.0000e+00	0.000e+00	0.000e+00	0.000e+00	613.000
MODIS 2ND STRUCT	247.9100	19.4580	-6.8251	2.2112e+03	6.0467e+02	2.5981e+03	2.550e+02	-1.839e+02	8.428e+01	14.730
.D2.0 168WALL 54.53IN	243.7500	-0.7335	-5.4500	0.0000e+00	0.0000e+00	0.0000e+00	0.000e+00	0.000e+00	0.000e+00	3.730
.D2.0 168WALL 29.64IN	243.7500	28.5390	-12.2020	0.0000e+00	0.0000e+00	0.0000e+00	0.000e+00	0.000e+00	0.000e+00	3.000
.D2.0 168WALL 26.39IN	243.7500	28.5390	-5.4500	0.0000e+00	0.0000e+00	0.0000e+00	0.000e+00	0.000e+00	0.000e+00	3.000
.BAY 7 CLUSTER FTG	256.0000	23.6250	-5.4500	0.0000e+00	0.0000e+00	0.0000e+00	0.000e+00	0.000e+00	0.000e+00	5.000
MODIS KM	234.4200	7.5100	-2.0328	3.9048e+03	2.0863e+03	5.9846e+03	3.223e+02	-2.276e-12	4.742e-13	7.500
.3-AXIS KM VOL BOT MT	231.7500	-24.7200	-2.0328	3.1208e+00	3.1208e+00	4.0644e+00	0.000e+00	0.000e+00	0.000e+00	2.500
.2-AXIS KM VOL BOT MT	256.0000	23.6250	-2.0328	3.1208e+00	3.1208e+00	4.0644e+00	0.000e+00	0.000e+00	0.000e+00	2.500
.1-AXIS KM VOL BOT MT	215.5000	23.6250	-2.0328	3.1208e+00	3.1208e+00	4.0644e+00	0.000e+00	0.000e+00	0.000e+00	2.500
"MOPITT"										
MOPITT 04.93	77.2130	15.5820	40.4850	1.0736e+03	3.8325e+03	3.1327e+03	2.349e+02	-1.484e+02	-1.401e+03	419.200
.BASE2	0.0000	0.0000	0.0000	0.0000e+00	0.0000e+00	0.0000e+00	0.000e+00	0.000e+00	0.000e+00	0.000
.POWER SUPPLY	0.0000	0.0000	0.0000	0.0000e+00	0.0000e+00	0.0000e+00	0.000e+00	0.000e+00	0.000e+00	0.000
.COVER2	0.0000	0.0000	0.0000	0.0000e+00	0.0000e+00	0.0000e+00	0.000e+00	0.000e+00	0.000e+00	0.000
.DUST EARTH ASSY2	0.0000	0.0000	0.0000	0.0000e+00	0.0000e+00	0.0000e+00	0.000e+00	0.000e+00	0.000e+00	0.000
..DUST MOTOR	0.0000	0.0000	0.0000	0.0000e+00	0.0000e+00	0.0000e+00	0.000e+00	0.000e+00	0.000e+00	0.000
..DUST COVER SHAFT4	0.0000	0.0000	0.0000	0.0000e+00	0.0000e+00	0.0000e+00	0.000e+00	0.000e+00	0.000e+00	0.000
..DUST SUPPORT	0.0000	0.0000	0.0000	0.0000e+00	0.0000e+00	0.0000e+00	0.000e+00	0.000e+00	0.000e+00	0.000
..DUST COVER(EARTH2)	0.0000	0.0000	0.0000	0.0000e+00	0.0000e+00	0.0000e+00	0.000e+00	0.000e+00	0.000e+00	0.000
.DUST SPACE2 ASSY	0.0000	0.0000	0.0000	0.0000e+00	0.0000e+00	0.0000e+00	0.000e+00	0.000e+00	0.000e+00	0.000
..DUST COVER(SPACE2)	0.0000	0.0000	0.0000	0.0000e+00	0.0000e+00	0.0000e+00	0.000e+00	0.000e+00	0.000e+00	0.000
..DUST SUPPORT	0.0000	0.0000	0.0000	0.0000e+00	0.0000e+00	0.0000e+00	0.000e+00	0.000e+00	0.000e+00	0.000
..DUST MOTOR	0.0000	0.0000	0.0000	0.0000e+00	0.0000e+00	0.0000e+00	0.000e+00	0.000e+00	0.000e+00	0.000
..DUST COVER SHAFT3	0.0000	0.0000	0.0000	0.0000e+00	0.0000e+00	0.0000e+00	0.000e+00	0.000e+00	0.000e+00	0.000
.BB ENVELOPE	0.0000	0.0000	0.0000	0.0000e+00	0.0000e+00	0.0000e+00	0.000e+00	0.000e+00	0.000e+00	0.000
.BB ENVELOPE	0.0000	0.0000	0.0000	0.0000e-00	0.0000e+00	0.0000e+00	0.000e+00	0.000e+00	0.000e+00	0.000
.COLD PLATE	89.8300	16.9180	32.5220	1.6423e+02	7.2747e+02	8.8715e+02	-2.459e-01	2.888e-04	-5.492e-04	13.500
.MOPITT-MP	76.7930	15.5370	40.7500	5.5852e-10	0.0000e+00	5.5852e-10	0.000e+00	0.000e+00	0.000e+00	405.700
MOPITT S/S	80.8000	16.5000	26.3000	0.0000e+00	0.0000e+00	0.0000e+00	0.000e+00	0.000e+00	0.000e+00	40.000
.MOP KM PADS	0.0000	0.0000	0.0000	0.0000e+00	0.0000e+00	0.0000e+00	0.000e+00	0.000e+00	0.000e+00	0.000
.MY PANEL	0.0000	0.0000	0.0000	0.0000e+00	0.0000e+00	0.0000e+00	0.000e+00	0.000e+00	0.000e+00	0.000
.PY PANEL	0.0000	0.0000	0.0000	0.0000e+00	0.0000e+00	0.0000e+00	0.000e+00	0.000e+00	0.000e+00	0.000
.MX PANEL	0.0000	0.0000	0.0000	0.0000e+00	0.0000e+00	0.0000e+00	0.000e+00	0.000e+00	0.000e+00	0.000
.PX PANEL	0.0000	0.0000	0.0000	0.0000e+00	0.0000e+00	0.0000e+00	0.000e+00	0.000e+00	0.000e+00	0.000
.STR PADS	0.0000	0.0000	0.0000	0.0000e+00	0.0000e+00	0.0000e+00	0.000e+00	0.000e+00	0.000e+00	0.000
.MOPITT S/S MP	80.8000	16.5000	26.3000	0.0000e+00	0.0000e+00	0.0000e+00	0.000e+00	0.000e+00	0.000e+00	40.000
MOPITT KM	85.3270	16.9120	31.7420	1.4302e+03	2.9156e+03	4.3457e+03	3.483e-02	0.000e+00	0.000e+00	7.500

DCC080393

20001390
30 July 1993

PDR BASELINE
CONFIGURATION = STOWED

Name	..CG, in System Axes (in).. X	Y	Z	.....Inertias, local @ CG, in System Axes (lb-in^2)..... Ixx	Iyy	Izz	Ixy	Iyz	Ixz	(lb) Mass
.1-AXIS KM VOL TOP MT	99.2680	-0.0000	31.7420	0.0000e+00	0.0000e+00	0.0000e+00	0.000e+00	0.000e+00	0.000e+00	2.500
.2-AXIS KM VOL TOP MT	57.4430	16.9120	31.7420	0.0000e+00	0.0000e+00	0.0000e+00	0.000e+00	0.000e+00	0.000e+00	2.500
.3-AXIS KM VOL TOP MT	99.2680	33.8250	31.7420	0.0000e+00	0.0000e+00	0.0000e+00	0.000e+00	0.000e+00	0.000e+00	2.500
"CERES"										
CERES	9.4998	14.5550	57.2690	2.1851e-09	2.1851e-09	0.0000e+00	0.000e+00	0.000e+00	0.000e+00	99.200
.COMPONENT18	9.4998	14.5550	57.2690	2.1851e-09	2.1851e-09	0.0000e+00	0.000e+00	0.000e+00	0.000e+00	99.200
.SENSOR	0.0000	0.0000	0.0000	0.0000e+00	0.0000e+00	0.0000e+00	0.000e+00	0.000e+00	0.000e+00	0.000
.COVER1	0.0000	0.0000	0.0000	0.0000e+00	0.0000e+00	0.0000e+00	0.000e+00	0.000e+00	0.000e+00	0.000
.COVER2	0.0000	0.0000	0.0000	0.0000e+00	0.0000e+00	0.0000e+00	0.000e+00	0.000e+00	0.000e+00	0.000
.COMPONENT24	0.0000	0.0000	0.0000	0.0000e+00	0.0000e+00	0.0000e+00	0.000e+00	0.000e+00	0.000e+00	0.000
.BASE	0.0000	0.0000	0.0000	0.0000e+00	0.0000e+00	0.0000e+00	0.000e+00	0.000e+00	0.000e+00	0.000
.THERMAL_TRGT	0.0000	0.0000	0.0000	0.0000e+00	0.0000e+00	0.0000e+00	0.000e+00	0.000e+00	0.000e+00	0.000
.THERMAL_TRGT	0.0000	0.0000	0.0000	0.0000e+00	0.0000e+00	0.0000e+00	0.000e+00	0.000e+00	0.000e+00	0.000
.THERMAL_TRGT	0.0000	0.0000	0.0000	0.0000e+00	0.0000e+00	0.0000e+00	0.000e+00	0.000e+00	0.000e+00	0.000
.THERMAL_TRGT	0.0000	0.0000	0.0000	0.0000e+00	0.0000e+00	0.0000e+00	0.000e+00	0.000e+00	0.000e+00	0.000
.THERMAL_TRGT	0.0000	0.0000	0.0000	0.0000e+00	0.0000e+00	0.0000e+00	0.000e+00	0.000e+00	0.000e+00	0.000
CERES	38.9100	-15.9050	57.2690	2.1851e-09	2.1851e-09	0.0000e+00	0.000e+00	0.000e+00	0.000e+00	99.200
.COMPONENT18	38.9100	-15.9050	57.2690	2.1851e-09	2.1851e-09	0.0000e+00	0.000e+00	0.000e+00	0.000e+00	99.200
.SENSOR	0.0000	0.0000	0.0000	0.0000e+00	0.0000e+00	0.0000e+00	0.000e+00	0.000e+00	0.000e+00	0.000
.COVER1	0.0000	0.0000	0.0000	0.0000e+00	0.0000e+00	0.0000e+00	0.000e+00	0.000e+00	0.000e+00	0.000
.COVER2	0.0000	0.0000	0.0000	0.0000e+00	0.0000e+00	0.0000e+00	0.000e+00	0.000e+00	0.000e+00	0.000
.COMPONENT24	0.0000	0.0000	0.0000	0.0000e+00	0.0000e+00	0.0000e+00	0.000e+00	0.000e+00	0.000e+00	0.000
.BASE	0.0000	0.0000	0.0000	0.0000e+00	0.0000e+00	0.0000e+00	0.000e+00	0.000e+00	0.000e+00	0.000
.THERMAL_TRGT	0.0000	0.0000	0.0000	0.0000e+00	0.0000e+00	0.0000e+00	0.000e+00	0.000e+00	0.000e+00	0.000
.THERMAL_TRGT	0.0000	0.0000	0.0000	0.0000e+00	0.0000e+00	0.0000e+00	0.000e+00	0.000e+00	0.000e+00	0.000
.THERMAL_TRGT	0.0000	0.0000	0.0000	0.0000e+00	0.0000e+00	0.0000e+00	0.000e+00	0.000e+00	0.000e+00	0.000
.THERMAL_TRGT	0.0000	0.0000	0.0000	0.0000e+00	0.0000e+00	0.0000e+00	0.000e+00	0.000e+00	0.000e+00	0.000
.THERMAL_TRGT	0.0000	0.0000	0.0000	0.0000e+00	0.0000e+00	0.0000e+00	0.000e+00	0.000e+00	0.000e+00	0.000
CERES SEC STR	25.7550	1.5690	40.6670	4.8936e+04	3.6866e+04	7.7040e+04	-4.137e+00	-2.206e+01	-6.906e+00	100.000
.CERES TRUSS	25.7640	4.6147	33.5740	3.4388e+04	2.4291e+04	5.5175e+04	-5.614e+00	1.091e+03	-3.467e+00	34.000
..HORIZ STRUT 1.5X.112	51.5000	19.6130	40.5270	0.0000e+00	0.0000e+00	0.0000e+00	0.000e+00	0.000e+00	0.000e+00	4.000
..VERT STRUT 1.5X.112	-0.0000	33.8250	30.9880	0.0000e+00	0.0000e+00	0.0000e+00	0.000e+00	0.000e+00	0.000e+00	2.500
..VERT FTG	0.0485	-33.8250	22.9000	0.0000e+00	0.0000e+00	0.0000e+00	0.000e+00	0.000e+00	0.000e+00	2.000
..SPACER PLATE	0.0000	0.0000	0.0000	0.0000e+00	0.0000e+00	0.0000e+00	0.000e+00	0.000e+00	0.000e+00	0.000
..SPACER PLATE	0.0000	0.0000	0.0000	0.0000e+00	0.0000e+00	0.0000e+00	0.000e+00	0.000e+00	0.000e+00	0.000
..CERES NODE	51.5000	34.8000	40.5270	0.0000e+00	0.0000e+00	0.0000e+00	0.000e+00	0.000e+00	0.000e+00	2.000
..HORIZ STRUT 1.5X.112	-0.0000	19.6130	40.5270	0.0000e+00	0.0000e+00	0.0000e+00	0.000e+00	0.000e+00	0.000e+00	4.000
..VERT FTG	0.0485	33.8250	22.9000	0.0000e+00	0.0000e+00	0.0000e+00	0.000e+00	0.000e+00	0.000e+00	2.000
..CERES NODE	51.5000	-34.8000	40.5270	0.0000e+00	0.0000e+00	0.0000e+00	0.000e+00	0.000e+00	0.000e+00	2.000
..CERES NODE	-0.0000	34.8000	40.5270	0.0000e+00	0.0000e+00	0.0000e+00	0.000e+00	0.000e+00	0.000e+00	2.000
..CERES NODE	0.0485	-34.8000	40.5270	0.0000e+00	0.0000e+00	0.0000e+00	0.000e+00	0.000e+00	0.000e+00	2.000
..VERT STRUT 1.5X.112	51.5000	33.8250	30.9880	0.0000e+00	0.0000e+00	0.0000e+00	0.000e+00	0.000e+00	0.000e+00	2.500
..VERT FTG	51.5480	33.8250	22.9000	0.0000e+00	0.0000e+00	0.0000e+00	0.000e+00	0.000e+00	0.000e+00	2.000
..VERT FTG	51.5480	-33.8250	22.9000	0.0000e+00	0.0000e+00	0.0000e+00	0.000e+00	0.000e+00	0.000e+00	2.000
..VERT STRUT 1.5X.112	51.5000	-33.8250	30.9880	0.0000e+00	0.0000e+00	0.0000e+00	0.000e+00	0.000e+00	0.000e+00	2.500
..VERT STRUT 1.5X.112	-0.0000	-33.8250	30.9880	0.0000e+00	0.0000e+00	0.0000e+00	0.000e+00	0.000e+00	0.000e+00	2.500
.IMP W/KM	25.7500	-0.0000	44.3220	1.1478e+04	9.9828e+03	2.1387e+04	0.000e+00	3.794e-08	0.000e+00	66.000
..CERES_PLATE	25.7500	-0.0000	44.7270	0.0000e+00	0.0000e+00	0.0000e+00	0.000e+00	0.000e+00	0.000e+00	51.000
..KM_ASSY	25.7500	-0.0000	42.9440	1.1441e+04	9.9459e+03	2.1387e+04	-2.371e-14	0.000e+00	0.000e+00	15.000
...3-AXIS KM VOL TOP MT	0.0000	-0.0000	42.9440	0.0000e+00	0.0000e+00	0.0000e+00	0.000e+00	0.000e+00	0.000e+00	2.500
...2-AXIS KM VOL TOP MT	51.5000	-0.0000	42.9440	0.0000e+00	0.0000e+00	0.0000e+00	0.000e+00	0.000e+00	0.000e+00	2.500
...1-AXIS KM VOL TOP MT	0.0000	-33.8250	42.9440	0.0000e+00	0.0000e+00	0.0000e+00	0.000e+00	0.000e+00	0.000e+00	2.500
...1-AXIS KM VOL TOP MT	51.5000	-33.8250	42.9440	0.0000e+00	0.0000e+00	0.0000e+00	0.000e+00	0.000e+00	0.000e+00	2.500
...1-AXIS KM VOL TOP MT	0.0000	33.8250	42.9440	0.0000e+00	0.0000e+00	0.0000e+00	0.000e+00	0.000e+00	0.000e+00	2.500
...1-AXIS KM VOL TOP MT	51.5000	33.8250	42.9440	0.0000e+00	0.0000e+00	0.0000e+00	0.000e+00	0.000e+00	0.000e+00	2.500

PDR BASELINE
CONFIGURATION = STOWED

Name	..CG, in System Axes (in).. X	Y	Z	.....Inertias, local @ CG, in System Axes (lb-in^2)..... Ixx	Iyy	Izz	Ixy	Iyz	Ixz	(lb) Mass
"MISR"										
MISR	122.8100	-20.5520	42.0170	6.6293e+04	9.8790e+04	8.4267e+04	-3.417e+02	-9.226e+02	9.568e+02	297.620
.MISR.BOX	0.0000	0.0000	0.0000	0.0000e+00	0.0000e+00	0.0000e+00	0.000e+00	0.000e+00	0.000e+00	0.000
.MISR.DOOR	0.0000	0.0000	0.0000	0.0000e+00	0.0000e+00	0.0000e+00	0.000e+00	0.000e+00	0.000e+00	0.000
.MISR-MP	122.8100	-20.5520	42.0170	6.6293e+04	9.8790e+04	8.4267e+04	-3.417e+02	-9.226e+02	9.568e+02	297.620
MISR KM	127.0000	-19.6150	22.6750	2.7701e+03	3.8150e+03	6.5763e+03	0.000e+00	0.000e+00	0.000e+00	10.000
.KM VOL	107.5000	-36.2210	22.6750	3.1208e+00	3.1208e+00	4.0644e+00	0.000e+00	0.000e+00	0.000e+00	2.500
.KM VOL	146.5000	-36.2210	22.6750	3.1208e+00	3.1208e+00	4.0644e+00	0.000e+00	0.000e+00	0.000e+00	2.500
.KM VOL	107.5000	-3.0095	22.6750	3.1208e+00	3.1208e+00	4.0644e+00	0.000e+00	0.000e+00	0.000e+00	2.500
.KM VOL	146.5000	-3.0095	22.6750	3.1208e+00	3.1208e+00	4.0644e+00	0.000e+00	0.000e+00	0.000e+00	2.500
"Instrument Radiator"										
RADIATORS	131.3600	37.8500	-1.7164	2.0284e+04	2.7932e+05	2.5907e+05	0.000e+00	0.000e+00	-2.022e+04	137.500
.TIR RADIATOR	179.5000	37.8500	-6.6650	3.5070e+03	2.1179e+04	1.7684e+04	0.000e+00	0.000e+00	0.000e+00	48.700
.SWIR RADIATOR	127.0000	37.8500	0.0000	7.2386e+03	1.3266e+04	6.0395e+03	0.000e+00	0.000e+00	0.000e+00	47.600
.MOPITT RADIATOR	79.5000	37.8500	2.1500	7.5896e+03	1.8351e+04	1.0772e+04	0.000e+00	1.418e-11	0.000e+00	41.200
RADIATOR MTS	128.7900	37.8500	-1.6100	0.0000e+00	0.0000e+00	0.0000e+00	0.000e+00	0.000e+00	0.000e+00	14.000
"Instrument BDU's"										
BDU	73.7950	-29.2750	27.8750	2.5849e+02	2.9367e+02	2.4047e+02	0.000e+00	0.000e+00	0.000e+00	17.800
BDU	164.5100	26.3650	22.6400	2.5849e+02	2.9367e+02	2.4047e+02	0.000e+00	0.000e+00	0.000e+00	17.800
BDU	216.0600	-25.3560	-27.8750	2.5849e+02	2.9367e+02	2.4047e+02	0.000e+00	0.000e+00	0.000e+00	17.800
"Instrument FDB's"										
FDB	60.6440	-28.7800	24.2500	1.0342e+01	3.5417e+00	1.1333e+01	0.000e+00	0.000e+00	0.000e+00	1.700
FDB	60.9960	-6.5297	24.2500	3.5417e+00	1.0342e+01	1.1333e+01	0.000e+00	0.000e+00	0.000e+00	1.700
FDB	135.3400	25.7380	26.2750	1.0342e+01	3.5417e+00	1.1333e+01	0.000e+00	0.000e+00	0.000e+00	1.700
FDB	141.6400	25.7380	26.2750	1.0342e+01	3.5417e+00	1.1333e+01	0.000e+00	0.000e+00	-3.745e-11	1.700
"Instrument HCE's"										
HCE TYPE 2	63.2000	-21.0850	26.1500	0.0000e+00	0.0000e+00	0.0000e+00	0.000e+00	0.000e+00	0.000e+00	0.600
HCE TYPE 2	138.9000	16.8550	26.1750	0.0000e+00	0.0000e+00	0.0000e+00	0.000e+00	0.000e+00	0.000e+00	0.600
HCE TYPE 2	216.3400	-14.4610	-26.1500	0.0000e+00	0.0000e+00	0.0000e+00	0.000e+00	0.000e+00	0.000e+00	0.600
"Instrument IC's"										
IC-CERES	45.2630	-30.6010	48.2430	0.0000e+00	0.0000e+00	0.0000e+00	0.000e+00	0.000e+00	0.000e+00	0.500
IC STD	72.4810	-10.7060	24.5470	0.0000e+00	0.0000e+00	0.0000e+00	0.000e+00	0.000e+00	0.000e+00	0.500
IC STD	88.2620	-28.6500	24.5470	0.0000e+00	0.0000e+00	0.0000e+00	0.000e+00	0.000e+00	0.000e+00	0.500
IC STD	226.8500	-13.7650	-24.5470	0.0000e+00	1.7621e-10	1.7621e-10	0.000e+00	0.000e+00	0.000e+00	0.500
IC-ASTER	122.5700	29.9560	25.2800	0.0000e+00	0.0000e+00	0.0000e+00	0.000e+00	0.000e+00	0.000e+00	0.500
"BDU Panels (including kinematic mounts)"										
BAY 2 BDU PANEL	74.8500	-19.0500	22.2500	9.3614e-11	9.3614e-11	0.0000e+00	0.000e+00	0.000e+00	0.000e+00	17.000
BAY 6 BDU PANEL	220.2700	-21.3670	-22.2500	0.0000e+00	0.0000e+00	0.0000e+00	0.000e+00	0.000e+00	0.000e+00	14.000

DCC080393

20001390
30 July 1993

PDR BASELINE
CONFIGURATION = STOWED

Name	..CG, in System Axes (in).. X	Y	Z	.....Inertias, local @ CG, in System Axes (lb-in^2)..... Ixx	Iyy	Izz	Ixy	Iyz	Ixz	(lb) Mass
"Torque Rod Panel"										
TORQUE ROD PANEL SYS	26.9190	-73.7500	19.5650	0.0000e+00	0.0000e+00	0.0000e+00	0.000e+00	0.000e+00	0.000e+00	25.000
.TORQUE ROD PANEL	26.9190	-73.7500	19.5650	0.0000e+00	0.0000e+00	0.0000e+00	0.000e+00	0.000e+00	0.000e+00	25.000
"Close-out Panels"										
CP BAY1/TRIANG SYS	25.7500	0.0000	33.4550	1.8638e+04	2.5766e+04	4.2850e+04	0.000e+00	0.000e+00	0.000e+00	32.400
.CP TRIANG +Y	-2.0200	22.0010	33.4550	7.3885e+02	1.9492e+02	5.4539e+02	0.000e+00	-1.552e+02	0.000e+00	8.100
.CP TRIANG +Y	53.5200	22.0010	33.4550	7.3885e+02	1.9492e+02	5.4539e+02	0.000e+00	-1.552e+02	0.000e+00	8.100
.CP TRIANG -Y	-2.0200	-22.0010	33.4550	7.3885e+02	1.9492e+02	5.4539e+02	0.000e+00	1.552e+02	0.000e+00	8.100
.CP TRIANG -Y	53.5200	-22.0010	33.4550	7.3885e+02	1.9492e+02	5.4539e+02	0.000e+00	1.552e+02	0.000e+00	8.100
.CP BAY1 -Y	0.0000	0.0000	0.0000	0.0000e+00	0.0000e+00	0.0000e+00	0.000e+00	0.000e+00	0.000e+00	0.000
CP BAY3 -Y SYSTEM	127.0000	-37.1250	-6.4500	1.2720e+03	3.0732e+03	1.8037e+03	0.000e+00	0.000e+00	0.000e+00	15.000
.CP BAY3 -Y	127.0000	-37.1250	-6.4500	1.2720e+03	3.0732e+03	1.8037e+03	0.000e+00	0.000e+00	0.000e+00	15.000
CP BAY4 -Y SYSTEM	159.7500	-37.1250	-6.4500	8.3740e+02	1.7544e+03	9.1856e+02	0.000e+00	0.000e+00	0.000e+00	9.500
.CP BAY4 -Y	159.7500	-37.1250	-6.4500	8.3740e+02	1.7544e+03	9.1856e+02	0.000e+00	0.000e+00	0.000e+00	9.500
CP BAY5 -Y SYSTEM	190.0000	-37.1250	-6.4500	8.3426e+02	1.7205e+03	8.8784e+02	0.000e+00	0.000e+00	0.000e+00	9.500
.CP BAY5 -Y	190.0000	-37.1250	-6.4500	8.3426e+02	1.7205e+03	8.8784e+02	0.000e+00	0.000e+00	0.000e+00	9.500
CP BAY4 -Z SYSTEM	161.9400	-17.6630	-22.2500	1.4126e+03	7.9962e+02	2.2105e+03	0.000e+00	0.000e+00	0.000e+00	10.500
.CP BAY4 -Z	161.9400	-17.6630	-22.2500	1.4126e+03	7.9962e+02	2.2105e+03	0.000e+00	0.000e+00	0.000e+00	10.500
CP BAY5 -Z SYSTEM	193.6200	-17.6650	-21.8250	2.1796e+03	2.3353e+03	4.5124e+03	-2.535e-01	0.000e+00	0.000e+00	15.000
.CP BAY5 -Z	193.6200	-17.6650	-21.8250	2.1796e+03	2.3353e+03	4.5124e+03	-2.535e-01	0.000e+00	0.000e+00	15.000
"Propulsion Module"										
PROP MODULE 6_2	17.1919	-0.2591	0.4472	2.5927e+05	2.3443e+05	2.3608e+05	2.439e+03	-9.427e+02	-5.238e+03	1101.414
.PM STRUCTURE ASSY	5.3099	0.0071	0.0120	6.4573e+04	4.2577e+04	3.8899e+04	-4.149e+00	7.644e-01	-7.572e+00	109.590
..BASE PANEL ASSY	0.5613	0.0102	0.0172	4.4646e+04	2.4442e+04	2.0578e+04	-4.386e-01	7.654e-01	-1.310e+00	76.460
...BASE PANEL	0.0000	0.0170	-0.0040	2.3478e+04	1.1635e+04	1.1874e+04	0.000e+00	7.820e-01	0.000e+00	45.965
...Z-CORNER FTG	0.1160	0.0000	31.7610	9.7440e+00	5.0920e+00	7.6430e+00	0.000e+00	0.000e+00	-9.060e-01	2.500
...LH Y-CORNER FTG	0.1150	-27.7040	15.5250	9.7500e+00	7.0000e+00	5.7440e+00	7.900e-01	1.081e+00	-4.330e-01	2.500
...RH Y-CORNER FTG	0.1150	-27.7040	-15.5250	9.7500e+00	7.0000e+00	5.7440e+00	7.910e-01	-1.081e+00	4.330e-01	2.500
...Z-CORNER FTG	0.1160	0.0000	-31.7610	9.7440e+00	5.0920e+00	7.6430e+00	0.000e+00	0.000e+00	9.060e-01	2.500
...LH Y-CORNER FTG	0.1150	27.7040	-15.5250	9.7500e+00	7.0000e+00	5.7440e+00	-7.900e-01	1.081e+00	4.330e-01	2.500
...RH Y-CORNER FTG	0.1150	27.7040	15.5250	9.7500e+00	7.0000e+00	5.7440e+00	-7.910e-01	-1.081e+00	-4.330e-01	2.500
...MAGE FITTING	-0.3790	0.0000	21.1250	2.2240e+00	1.4720e+00	1.4720e+00	0.000e+00	0.000e+00	0.000e+00	1.165
...MAGE FITTING	-0.3790	18.6520	-9.9176	2.2240e+00	1.4720e+00	1.4720e+00	0.000e+00	-2.971e-09	0.000e+00	1.165
...MAGE FITTING	-0.3790	-18.6520	-9.9176	2.2240e+00	1.4720e+00	1.4720e+00	0.000e+00	2.971e-09	0.000e+00	1.165
...BP STIFFENER	3.5425	0.0000	0.0000	4.4138e+03	4.4343e+03	4.8442e+01	0.000e+00	0.000e+00	0.000e+00	12.000
....BOX BEAM	3.0000	0.0000	0.0000	1.8400e+03	1.8457e+03	2.5337e+01	0.000e+00	0.000e+00	0.000e+00	6.760
....VEM LAYER	5.2500	0.0000	0.0000	6.7318e+02	6.7138e+02	1.9110e+00	0.000e+00	0.000e+00	0.000e+00	2.480
....CONSTRAINING LAYER	5.5360	0.0000	0.0000	1.9722e+02	1.9668e+02	5.4500e-01	0.000e+00	0.000e+00	0.000e+00	0.726
....BP STIFFENER FTG	2.5520	0.0000	28.9160	1.3200e+00	2.8940e+00	3.2740e+00	0.000e+00	0.000e+00	-6.240e-01	1.017
....BP STIFFENER FTG	2.5520	0.0000	-28.9160	1.3200e+00	2.8940e+00	3.2740e+00	0.000e+00	0.000e+00	6.240e-01	1.017
..RING/STRUT ASSY	16.2680	-0.0000	0.0000	1.9927e+04	1.2432e+04	1.2618e+04	-4.456e-05	-4.977e-03	-5.092e-05	33.134
...YZ BIPOD ASSY	12.7900	12.2070	20.8340	3.3276e+02	3.5487e+02	4.9826e+02	-3.527e+01	-1.278e+02	-6.026e+01	3.944
....END FITTING	3.6974	2.3564	29.4410	7.0784e-01	1.4053e+00	1.2878e+00	2.971e-01	-1.610e-01	-4.246e-01	0.650
....END FITTING	21.8830	9.0961	19.8170	7.0784e-01	1.4053e+00	1.2878e+00	2.971e-01	-1.610e-01	-4.246e-01	0.650

PDR BASELINE
CONFIGURATION = STOWED

Name	..CG, in System Axes (in).. X	Y	Z	.....Inertias, local @ CG, in System Axes (lb-in^2)..... Ixx	Iyy	Izz	Ixy	Iyz	Ixz	(lb) Mass
....+/-Y +/-Z TUBE	12.7900	5.7260	24.6290	8.8609e+00	2.6520e+01	2.3601e+01	7.589e+00	-4.016e+00	-1.083e+01	0.672
....END FITTING	3.6974	24.5340	16.4550	7.0784e-01	1.1786e+00	1.5146e+00	-5.157e-01	-3.400e-02	5.165e-02	0.650
....+/-Y +/-Z TUBE	12.7900	18.6890	17.0380	8.8609e+00	2.0872e+01	2.9250e+01	-1.316e+01	-8.427e-01	1.310e+00	0.672
....END FITTING	21.8830	12.8430	17.6210	7.0784e-01	1.1786e+00	1.5146e+00	-5.157e-01	-3.400e-02	5.165e-02	0.650
...Y_BIPOD_ASSY	12.7900	24.2790	0.0000	3.1122e+02	5.4925e+02	2.8057e+02	-7.226e+01	-2.864e-04	-2.546e-04	3.934
....END FITTING	3.7090	26.8200	12.3790	6.9708e-01	1.4528e+00	1.2511e+00	-2.275e-01	1.319e-01	-4.601e-01	0.650
....END FITTING	21.8710	21.7380	2.0994	6.9708e-01	1.4528e+00	1.2511e+00	-2.275e-01	1.319e-01	-4.601e-01	0.650
....+/-Y TUBE	12.7900	24.2790	7.2390	8.3990e+00	2.7092e+01	2.2183e+01	-5.675e+00	3.212e+00	-1.148e+01	0.667
....END FITTING	3.7090	26.8200	-12.3790	6.9708e-01	1.4528e+00	1.2511e+00	-2.275e-01	-1.319e-01	4.601e-01	0.650
....+/-Y TUBE	12.7900	24.2790	-7.2390	8.3990e+00	2.7092e+01	2.2183e+01	-5.676e+00	-3.212e+00	1.148e+01	0.667
....END FITTING	21.8710	21.7380	-2.0994	6.9708e-01	1.4528e+00	1.2511e+00	-2.275e-01	-1.319e-01	4.601e-01	0.650
...YZ_BIPOD_ASSY	12.7900	12.2090	-20.8320	3.3276e+02	3.5504e+02	4.9809e+02	-3.533e+01	1.279e+02	6.022e+01	3.944
....END FITTING	3.6974	24.5330	-16.4450	7.0784e-01	1.1786e+00	1.5146e+00	-5.157e-01	3.401e-02	-5.166e-02	0.650
....END FITTING	21.8830	12.8430	-17.6210	7.0784e-01	1.1786e+00	1.5146e+00	-5.157e-01	3.401e-02	-5.167e-02	0.650
....+/-Y +/-Z TUBE	12.7900	18.6880	-17.0330	8.8609e+00	2.0874e+01	2.9248e+01	-1.316e+01	8.525e-01	-1.326e+00	0.672
....END FITTING	3.6974	2.3648	-29.4460	7.0784e-01	1.4053e+00	1.2878e+00	2.971e-01	1.610e-01	4.246e-01	0.650
....+/-Y +/-Z TUBE	12.7900	5.7303	-24.6320	8.8609e+00	2.6530e+01	2.3592e+01	7.575e+00	4.013e+00	1.084e+01	0.672
....END FITTING	21.8830	9.0962	-19.8170	7.0784e-01	1.4053e+00	1.2878e+00	2.971e-01	1.610e-01	4.246e-01	0.650
...YZ_BIPOD_ASSY	12.7900	-12.2070	-20.8340	3.3276e+02	3.5487e+02	4.9826e+02	3.527e+01	-1.278e+02	6.026e+01	3.944
....END FITTING	3.6974	-2.3564	-29.4410	7.0784e-01	1.4053e+00	1.2878e+00	-2.971e-01	-1.610e-01	4.246e-01	0.650
....END FITTING	21.8830	-9.0961	-19.8170	7.0784e-01	1.4053e+00	1.2878e+00	-2.971e-01	-1.610e-01	4.246e-01	0.650
....+/-Y +/-Z TUBE	12.7900	-5.7260	-24.6290	8.8609e+00	2.6520e+01	2.3601e+01	-7.589e+00	-4.016e+00	1.083e+01	0.672
....END FITTING	3.6974	-24.5340	-16.4550	7.0784e-01	1.1786e+00	1.5146e+00	5.157e-01	-3.400e-02	-5.165e-02	0.650
....+/-Y +/-Z TUBE	12.7900	-18.6890	-17.0380	8.8609e+00	2.0872e+01	2.9250e+01	1.316e+01	-8.427e-01	-1.310e+00	0.672
....END FITTING	21.8830	-12.8430	-17.6210	7.0784e-01	1.1786e+00	1.5146e+00	5.157e-01	-3.400e-02	-5.165e-02	0.650
...Y_BIPOD_ASSY	12.7900	-24.2790	-0.0000	3.1122e+02	5.4925e+02	2.8057e+02	7.226e+01	-2.864e-04	2.546e-04	3.934
....END FITTING	3.7090	-26.8200	-12.3790	6.9708e-01	1.4528e+00	1.2511e+00	2.275e-01	1.319e-01	4.601e-01	0.650
....END FITTING	21.8710	-21.7380	-2.0994	6.9708e-01	1.4528e+00	1.2511e+00	2.275e-01	1.319e-01	4.601e-01	0.650
....+/-Y TUBE	12.7900	-24.2790	-7.2390	8.3990e+00	2.7092e+01	2.2183e+01	5.675e+00	3.212e+00	1.148e+01	0.667
....END FITTING	3.7090	-26.8200	12.3790	6.9708e-01	1.4528e+00	1.2511e+00	2.275e-01	-1.319e-01	-4.601e-01	0.650
....+/-Y TUBE	12.7900	-24.2790	7.2390	8.3990e+00	2.7092e+01	2.2183e+01	5.676e+00	-3.212e+00	-1.148e+01	0.667
....END FITTING	21.8710	-21.7380	2.0994	6.9708e-01	1.4528e+00	1.2511e+00	2.275e-01	-1.319e-01	-4.601e-01	0.650
...YZ_BIPOD_ASSY	12.7900	-12.2090	20.8320	3.3276e+02	3.5504e+02	4.9809e+02	3.533e+01	1.279e+02	-6.022e+01	3.944
....END FITTING	3.6974	-24.5330	16.4450	7.0784e-01	1.1786e+00	1.5146e+00	5.157e-01	3.401e-02	5.166e-02	0.650
....END FITTING	21.8830	-12.8430	17.6210	7.0784e-01	1.1786e+00	1.5146e+00	5.157e-01	3.401e-02	5.167e-02	0.650
....+/-Y +/-Z TUBE	12.7900	-18.6880	17.0330	8.8609e+00	2.0874e+01	2.9248e+01	1.316e+01	8.525e-01	1.326e+00	0.672
....END FITTING	3.6974	-2.3648	29.4460	7.0784e-01	1.4053e+00	1.2878e+00	-2.971e-01	1.610e-01	-4.246e-01	0.650
....+/-Y +/-Z TUBE	12.7900	-5.7303	24.6320	8.8609e+00	2.6530e+01	2.3592e+01	-7.575e+00	4.013e+00	-1.084e+01	0.672
....END FITTING	21.8830	-9.0962	19.8170	7.0784e-01	1.4053e+00	1.2878e+00	-2.971e-01	1.610e-01	-4.246e-01	0.650
...TANK SUPPORT RING	24.9330	0.0000	0.0000	4.1370e+03	2.0683e+03	2.0762e+03	0.000e+00	0.000e+00	0.000e+00	9.490
.PROPULSION ASSY 6_2	18.8270	-0.2117	-0.4093	2.4860e+04	2.3573e+04	3.2213e+04	1.129e+02	-9.331e+02	1.133e+03	97.010
..PROP TANK (TDRS)	24.3950	0.0000	0.0000	1.3075e+04	1.0601e+04	1.0602e+04	0.000e+00	0.000e+00	0.000e+00	76.000
..ROCKET ENGINES 6_2	-4.3888	-1.6648	-4.0937	8.0735e+03	1.2881e+03	6.8896e+03	3.108e+01	-6.326e+02	3.504e+01	12.840
...5LB ENGINE	-5.8427	11.4590	-13.6080	9.7653e-01	6.1776e+00	6.1829e+00	-3.057e-01	-7.414e-03	2.005e-01	1.410
...5LB ENGINE	-5.8427	9.9026	-16.2720	9.7653e-01	6.1753e+00	6.1852e+00	-3.249e-01	-6.112e-03	1.678e-01	1.410
...5LB ENGINE	-5.8427	-19.0390	0.6284	9.7653e-01	6.1776e+00	6.1829e+00	3.058e-01	-7.414e-03	-2.004e-01	1.410
...5LB ENGINE	-5.8427	-17.4830	3.2923	9.7653e-01	6.1753e+00	6.1852e+00	3.249e-01	-6.110e-03	-1.677e-01	1.410
...1LB ENGINE	-2.2500	-27.5870	-6.6500	2.2400e+00	1.5000e-01	2.2300e+00	0.000e+00	2.300e-02	0.000e+00	0.600
...1LB ENGINE	-4.2500	-27.5870	-6.6500	2.2400e+00	1.5000e-01	2.2300e+00	0.000e+00	2.300e-02	0.000e+00	0.600
...1LB ENGINE	-2.2500	-27.9780	11.9710	2.2400e+00	6.5008e-01	1.7299e+00	0.000e+00	8.892e-01	0.000e+00	0.600
...1LB ENGINE	-4.2500	-27.9780	11.9710	2.2400e+00	6.5008e-01	1.7299e+00	0.000e+00	8.892e-01	0.000e+00	0.600
...1LB ENGINE	-2.2500	27.9780	11.9710	2.2400e+00	6.5008e-01	1.7299e+00	0.000e+00	-8.892e-01	0.000e+00	0.600

DCC080393

20001390
30 July 1993

PDR BASELINE
CONFIGURATION = STOWED

Name	..CG, in System Axes (in).. X	Y	Z	.....Inertias, local @ CG, in System Axes (lb-in^2)..... Ixx	Iyy	Izz	Ixy	Iyz	Ixz	(lb) Mass
...1LB ENGINE	-4.2500	27.9780	11.9710	2.2400e+00	6.5008e-01	1.7299e+00	0.000e+00	-8.892e-01	0.000e+00	0.600
...1LB ENGINE	-2.2500	27.5870	-6.6500	2.2400e+00	1.5000e-01	2.2300e+00	0.000e+00	-2.300e-02	0.000e+00	0.600
...1LB ENGINE	-4.2500	27.5870	-6.6500	2.2400e+00	1.5000e-01	2.2300e+00	0.000e+00	-2.300e-02	0.000e+00	0.600
...1LB ENGINE	-2.2500	27.9780	-11.9710	2.2400e+00	6.5008e-01	1.7299e+00	0.000e+00	8.892e-01	0.000e+00	0.600
...1LB ENGINE	-4.2500	27.9780	-11.9710	2.2400e+00	6.5008e-01	1.7299e+00	0.000e+00	8.892e-01	0.000e+00	0.600
...1LB ENGINE	-2.2500	-27.9780	-11.9710	2.2400e+00	6.5008e-01	1.7299e+00	0.000e+00	-8.892e-01	0.000e+00	0.600
...1LB ENGINE	-4.2500	-27.9780	-11.9710	2.2400e+00	6.5008e-01	1.7299e+00	0.000e+00	-8.892e-01	0.000e+00	0.600
..PROP CMPNTS 6_2	5.5587	0.1628	2.4860	3.4497e+03	2.0202e+02	3.4404e+03	-4.033e+02	-3.817e+02	4.775e+01	5.170
...FILTER ASSY	1.6270	21.3100	4.6250	5.2000e-01	5.2500e-01	6.6000e-02	0.000e+00	6.000e-03	0.000e+00	0.400
...FILTER ASSY	1.6270	21.3100	-4.3750	5.2000e-01	5.2500e-01	6.6000e-02	0.000e+00	6.000e-03	0.000e+00	0.400
...LATCH VALVE	2.7930	25.8000	4.8580	7.6700e-01	1.1440e+00	7.1800e-01	1.352e-09	9.932e-09	5.800e-02	0.740
...LATCH VALVE	2.7930	25.8000	-5.4090	7.6700e-01	1.1440e+00	7.1800e-01	-1.352e-09	9.932e-09	-5.800e-02	0.740
...LP SERVICE VALVE	14.1020	-29.4640	6.4882	1.0500e-01	5.0750e-02	8.6250e-02	0.000e+00	-3.074e-02	0.000e+00	0.270
...LP SERVICE VALVE	11.1020	-29.4640	6.4882	1.0500e-01	5.0750e-02	8.6250e-02	0.000e+00	-3.074e-02	0.000e+00	0.270
...PRESSURE TRANSDUCER	4.7380	16.9020	0.0000	6.9400e-01	1.1000e-01	6.9400e-01	0.000e+00	0.000e+00	0.000e+00	0.600
...SERVICE VALVE BRKT	7.8030	-27.7840	5.5182	7.4660e+00	3.8163e+01	3.7742e+01	-1.148e+00	3.646e-01	6.630e-01	1.750
..MANIFOLD TUBING	0.0000	0.0000	0.0000	0.0000e+00	0.0000e+00	0.0000e+00	0.000e+00	0.000e+00	0.000e+00	3.000
.ELEC BOXES 6_2	3.7140	-4.1109	8.2166	2.0683e+04	1.1493e+04	1.1067e+04	-1.207e+03	2.036e+03	8.741e+02	64.620
..PMEA	5.1740	-8.4330	18.6550	1.8965e+02	1.8099e+02	1.7837e+02	0.000e+00	-2.263e+00	0.000e+00	14.260
..PMEA	5.1740	9.0830	19.7810	1.8965e+02	1.8099e+02	1.7837e+02	8.573e-07	2.263e+00	8.014e-07	14.260
..EPC	-1.7500	7.2810	-2.0000	1.7048e+01	8.5420e+00	9.2570e+00	0.000e+00	0.000e+00	0.000e+00	2.000
..EPC	-1.7500	-1.2690	-2.0000	1.7048e+01	8.5420e+00	9.2570e+00	0.000e+00	0.000e+00	0.000e+00	2.000
..EPC	-1.7500	-9.8190	-2.0000	1.7048e+01	8.5420e+00	9.2570e+00	0.000e+00	-1.667e-08	0.000e+00	2.000
..EPC	-1.7500	4.9640	11.5460	1.7048e+01	9.0783e+00	8.7208e+00	0.000e+00	3.096e-01	0.000e+00	2.000
..FDB (120V)	-2.5000	5.0030	26.8490	1.1333e+01	8.6420e+00	5.2420e+00	0.000e+00	2.945e+00	0.000e+00	1.700
..BDU	6.0530	-19.2500	2.2000	2.5094e+02	2.8951e+02	2.7221e+02	0.000e+00	-1.968e-06	0.000e+00	17.800
..FDB (28V)	-2.5000	7.6690	-25.2100	1.1333e+01	5.2420e+00	8.6420e+00	0.000e+00	2.945e+00	0.000e+00	1.700
..FDB (28V)	-2.5000	25.8120	5.7650	1.1333e+01	1.0342e+01	3.5420e+00	0.000e+00	-1.585e-07	0.000e+00	1.700
..HCE (TYPE 4)	2.2000	-12.0000	-14.0000	7.8000e+00	4.5240e+00	4.5240e+00	0.000e+00	0.000e+00	0.000e+00	1.300
..HCE (TYPE 4)	2.2000	-5.0000	-16.7620	7.8000e+00	4.5240e+00	4.5240e+00	0.000e+00	0.000e+00	0.000e+00	1.300
..HCE (TYPE 4)	2.2000	5.0000	-16.7620	7.8000e+00	4.5240e+00	4.5240e+00	0.000e+00	0.000e+00	0.000e+00	1.300
..HCE (TYPE 4)	2.2000	12.0000	-14.0000	7.8000e+00	4.5240e+00	4.5240e+00	0.000e+00	0.000e+00	0.000e+00	1.300
..S/C HARNESS BRKT	2.1207	-15.3620	24.1170	0.0000e+00	2.1511e-18	2.1511e-18	0.000e+00	0.000e+00	0.000e+00	0.000
.THERMAL COMP MASS	2.0000	0.0000	0.0000	0.0000e+00	0.0000e+00	0.0000e+00	0.000e+00	0.000e+00	0.000e+00	13.590
.POWER HARNESS MASS	2.0000	0.0000	0.0000	0.0000e+00	0.0000e+00	0.0000e+00	0.000e+00	0.000e+00	0.000e+00	17.800
.PRIMARY STRUCT I/F	0.2070	0.0000	-0.0000	1.7523e+04	8.6445e+03	8.9036e+03	-1.243e-08	6.457e-02	0.000e+00	15.000
..INTERFACE FTG	0.2070	0.0000	34.1460	5.5510e+00	4.9270e+00	4.8910e+00	0.000e+00	0.000e+00	-2.360e-01	2.500
..INTERFACE FTG	0.2070	29.7890	16.6900	5.5510e+00	4.8996e+00	4.9184e+00	-2.059e-01	1.535e-02	-1.153e-01	2.500
..INTERFACE FTG	0.2070	29.7900	-16.6890	5.5510e+00	4.8996e+00	4.9184e+00	-2.059e-01	-1.535e-02	1.153e-01	2.500
..INTERFACE FTG	0.2070	0.0000	-34.1460	5.5510e+00	4.9270e+00	4.8910e+00	0.000e+00	0.000e+00	2.360e-01	2.500
..INTERFACE FTG	0.2070	-29.7890	-16.6900	5.5510e+00	4.8996e+00	4.9184e+00	2.059e-01	1.535e-02	1.153e-01	2.500
..INTERFACE FTG	0.2070	-29.7900	16.6890	5.5510e+00	4.8996e+00	4.9184e+00	2.059e-01	-1.535e-02	-1.153e-01	2.500
.FUEL (LAUNCH)	21.3210	0.0000	0.0000	1.2645e+05	8.5501e+04	8.5501e+04	0.000e+00	0.000e+00	0.000e+00	760.000
.COMPONENT BRKT MASS	2.0000	0.0000	0.0000	0.0000e+00	0.0000e+00	0.0000e+00	0.000e+00	0.000e+00	0.000e+00	8.600
.C&DH HARNESS MASS	0.0000	0.0000	0.0000	0.0000e+00	0.0000e+00	0.0000e+00	0.000e+00	0.000e+00	0.000e+00	15.200
"Contingency (12%)"										
CONTINGENCY 12%	90.8700	3.7150	-15.3020	1.0539e+06	3.5938e+06	3.5079e+06	-1.510e+04	-3.521e+04	1.754e+04	742.140

APPENDIX III

30 MASS PROPERTIES REPORT–DEPLOYED SOLAR ARRAY AND HIGH GAIN ANTENNA

PDR BASELINE
CONFIGURATION = DEPLOYED SOLAR ARRAY AND DEPLOYED HGA

Name	..CG, in System Axes (in).. X	Y	Z	.....Inertias, local @ CG, in System Axes (lb-in^2)..... Ixx	Iyy	Izz	Ixy	Iyz	Ixz	(lb) Mass
GAL_ARS_ARRAY	128.0500	-177.4500	-47.0650	8.0649e+06	8.0429e+05	8.7607e+06	1.395e+04	-3.016e+05	-6.519e+02	453.400
.CAN18_55	0.0000	0.0000	0.0000	0.0000e+00	0.0000e+00	0.0000e+00	0.000e+00	0.000e+00	0.000e+00	0.000
.SSU8_30_6	0.0000	0.0000	0.0000	0.0000e+00	0.0000e+00	0.0000e+00	0.000e+00	0.000e+00	0.000e+00	0.000
.BASE204_2_16	0.0000	0.0000	0.0000	0.0000e+00	0.0000e+00	0.0000e+00	0.000e+00	0.000e+00	0.000e+00	0.000
.COVER204_2_16	0.0000	0.0000	0.0000	0.0000e+00	0.0000e+00	0.0000e+00	0.000e+00	0.000e+00	0.000e+00	0.000
.DEU_MAST	0.0000	0.0000	0.0000	0.0000e+00	0.0000e+00	0.0000e+00	0.000e+00	0.000e+00	0.000e+00	0.000
.BLGALARS192_471	0.0000	0.0000	0.0000	0.0000e+00	0.0000e+00	0.0000e+00	0.000e+00	0.000e+00	0.000e+00	0.000
.CSS4D-N	31.3330	-99.2670	-50.0880	6.1796e-01	6.1221e-01	7.9144e-01	-9.041e-02	6.010e-02	6.165e-02	0.600
..DETCSS	29.7050	-98.6950	-50.1800	9.9767e-04	8.2455e-04	9.9767e-04	0.000e+00	0.000e+00	1.731e-04	0.011
..DETCSS	30.6000	-98.6950	-49.2850	9.9767e-04	8.2455e-04	9.9767e-04	7.066e-11	-5.328e-11	1.731e-04	0.011
..DETCSS	31.8950	-100.8900	-50.1800	8.2455e-04	9.9767e-04	9.9767e-04	0.000e+00	1.731e-04	0.000e+00	0.011
..DETCSS	31.8950	-99.9900	-49.2850	8.2455e-04	9.9767e-04	9.9767e-04	-7.066e-11	1.731e-04	5.328e-11	0.011
..POS 20DEG BAFFLE	31.8950	-100.2600	-49.2900	1.0735e-04	1.9577e-04	1.5638e-04	0.000e+00	-1.392e-05	0.000e+00	0.002
..POS 20DEG BAFFLE	31.8950	-101.1500	-50.1850	1.0735e-04	1.9577e-04	1.5638e-04	0.000e+00	-1.392e-05	0.000e+00	0.002
..BKTCSS4-N	31.3630	-99.2270	-50.1280	5.3056e-01	5.3056e-01	6.6886e-01	-5.124e-02	6.248e-02	6.248e-02	0.542
..FULL BAFFLE	31.8950	-100.1100	-49.1650	2.9476e-04	3.3681e-04	3.3681e-04	0.000e+00	4.205e-05	0.000e+00	0.003
..FULL BAFFLE	31.8950	-101.0000	-50.0600	2.9476e-04	3.3681e-04	3.3681e-04	0.000e+00	4.205e-05	0.000e+00	0.003
..FULL BAFFLE	30.4800	-98.6950	-49.1650	3.3681e-04	2.9476e-04	3.3681e-04	0.000e+00	0.000e+00	4.205e-05	0.003
..FULL BAFFLE	29.5850	-98.6950	-50.0600	3.3681e-04	2.9476e-04	3.3681e-04	0.000e+00	0.000e+00	4.205e-05	0.003
.CSS4D-N	224.6700	-99.2670	-68.4520	6.1796e-01	6.1221e-01	7.9144e-01	9.041e-02	-6.010e-02	6.165e-02	0.600
..DETCSS	226.2900	-98.6950	-68.3600	9.9767e-04	8.2455e-04	9.9767e-04	0.000e+00	0.000e+00	1.731e-04	0.011
..DETCSS	225.4000	-98.6950	-69.2550	9.9767e-04	8.2455e-04	9.9767e-04	-7.066e-11	5.328e-11	1.731e-04	0.011
..DETCSS	224.1000	-100.8900	-68.3600	8.2455e-04	9.9767e-04	9.9767e-04	0.000e+00	-1.731e-04	0.000e+00	0.011
..DETCSS	224.1000	-99.9900	-69.2550	8.2455e-04	9.9767e-04	9.9767e-04	7.066e-11	-1.731e-04	5.328e-11	0.011
..POS 20DEG BAFFLE	224.1000	-100.2600	-69.2500	1.0735e-04	1.9577e-04	1.5638e-04	0.000e+00	1.392e-05	0.000e+00	0.002
..POS 20DEG BAFFLE	224.1000	-101.1500	-68.3550	1.0735e-04	1.9577e-04	1.5638e-04	0.000e+00	1.392e-05	0.000e+00	0.002
..BKTCSS4-N	224.6400	-99.2270	-68.4120	5.3056e-01	5.3056e-01	6.6886e-01	5.124e-02	-6.248e-02	6.248e-02	0.542
..FULL BAFFLE	224.1000	-100.1100	-69.3750	2.9476e-04	3.3681e-04	3.3681e-04	0.000e+00	-4.205e-05	0.000e+00	0.003
..FULL BAFFLE	224.1000	-101.0000	-68.4800	2.9476e-04	3.3681e-04	3.3681e-04	0.000e+00	-4.205e-05	0.000e+00	0.003
..FULL BAFFLE	225.5200	-98.6950	-69.3750	3.3681e-04	2.9476e-04	3.3681e-04	0.000e+00	0.000e+00	4.205e-05	0.003
..FULL BAFFLE	226.4100	-98.6950	-68.4800	3.3681e-04	2.9476e-04	3.3681e-04	0.000e+00	0.000e+00	4.205e-05	0.003
.CSS4D-N	31.3330	-98.2130	-68.4520	6.1796e-01	6.1221e-01	7.9144e-01	9.041e-02	6.010e-02	-6.165e-02	0.600
..DETCSS	29.7050	-98.7850	-68.3600	9.9767e-04	8.2455e-04	9.9767e-04	0.000e+00	0.000e+00	-1.731e-04	0.011
..DETCSS	30.6000	-98.7850	-69.2550	9.9767e-04	8.2455e-04	9.9767e-04	-7.066e-11	-5.328e-11	-1.731e-04	0.011
..DETCSS	31.8950	-96.5950	-68.3600	8.2455e-04	9.9767e-04	9.9767e-04	0.000e+00	1.731e-04	0.000e+00	0.011
..DETCSS	31.8950	-97.4900	-69.2550	8.2455e-04	9.9767e-04	9.9767e-04	7.066e-11	1.731e-04	-5.328e-11	0.011
..POS 20DEG BAFFLE	31.8950	-97.2240	-69.2500	1.0735e-04	1.9577e-04	1.5638e-04	0.000e+00	-1.392e-05	0.000e+00	0.002
..POS 20DEG BAFFLE	31.8950	-96.3290	-68.3550	1.0735e-04	1.9577e-04	1.5638e-04	0.000e+00	-1.392e-05	0.000e+00	0.002
..BKTCSS4-N	31.3630	-98.2530	-68.4120	5.3056e-01	5.3056e-01	6.6886e-01	5.124e-02	6.248e-02	-6.248e-02	0.542
..FULL BAFFLE	31.8950	-97.3700	-69.3750	2.9476e-04	3.3681e-04	3.3681e-04	0.000e+00	4.205e-05	0.000e+00	0.003
..FULL BAFFLE	31.8950	-96.4750	-68.4800	2.9476e-04	3.3681e-04	3.3681e-04	0.000e+00	4.205e-05	0.000e+00	0.003
..FULL BAFFLE	30.4800	-98.7850	-69.3750	3.3681e-04	2.9476e-04	3.3681e-04	0.000e+00	0.000e+00	-4.205e-05	0.003
..FULL BAFFLE	29.5850	-98.7850	-68.4800	3.3681e-04	2.9476e-04	3.3681e-04	0.000e+00	0.000e+00	-4.205e-05	0.003
.CSS4D-N	224.6700	-98.2130	-50.0880	6.1796e-01	6.1221e-01	7.9144e-01	-9.041e-02	-6.010e-02	-6.165e-02	0.600
..DETCSS	226.2900	-98.7850	-50.1800	9.9767e-04	8.2455e-04	9.9767e-04	0.000e+00	0.000e+00	-1.731e-04	0.011
..DETCSS	225.4000	-98.7850	-49.2850	9.9767e-04	8.2455e-04	9.9767e-04	7.066e-11	5.328e-11	-1.731e-04	0.011
..DETCSS	224.1000	-96.5950	-50.1800	8.2455e-04	9.9767e-04	9.9767e-04	0.000e+00	-1.731e-04	0.000e+00	0.011
..DETCSS	224.1000	-97.4900	-49.2850	8.2455e-04	9.9767e-04	9.9767e-04	-7.066e-11	-1.731e-04	-5.328e-11	0.011
..POS 20DEG BAFFLE	224.1000	-97.2240	-49.2900	1.0735e-04	1.9577e-04	1.5638e-04	0.000e+00	1.392e-05	0.000e+00	0.002
..POS 20DEG BAFFLE	224.1000	-96.3290	-50.1850	1.0735e-04	1.9577e-04	1.5638e-04	0.000e+00	1.392e-05	0.000e+00	0.002
..BKTCSS4-N	224.6400	-98.2530	-50.1280	5.3056e-01	5.3056e-01	6.6886e-01	-5.124e-02	-6.248e-02	-6.248e-02	0.542
..FULL BAFFLE	224.1000	-97.3700	-49.1650	2.9476e-04	3.3681e-04	3.3681e-04	0.000e+00	-4.205e-05	0.000e+00	0.003
..FULL BAFFLE	224.1000	-96.4750	-50.0600	2.9476e-04	3.3681e-04	3.3681e-04	0.000e+00	-4.205e-05	0.000e+00	0.003
..FULL BAFFLE	225.5200	-98.7850	-49.1650	3.3681e-04	2.9476e-04	3.3681e-04	0.000e+00	0.000e+00	-4.205e-05	0.003

PDR BASELINE
CONFIGURATION = DEPLOYED SOLAR ARRAY AND DEPLOYED HGA

Name	..CG, in System Axes (in).. X	Y	Z	.....Inertias, local @ CG, in System Axes (lb-in^2)..... Ixx	Iyy	Izz	Ixy	Iyz	Ixz	(lb) Mass
..FULL BAFFLE	226.4100	-98.7850	-50.0600	3.3681e-04	2.9476e-04	3.3681e-04	0.000e+00	0.000e+00	-4.205e-05	0.003
.NEW SAD HINGE	0.0000	0.0000	0.0000	0.0000e+00	0.0000e+00	0.0000e+00	0.000e+00	0.000e+00	0.000e+00	0.000
.MASSPROPS_DEPLOY	128.0500	-177.8700	-47.0000	8.0494e+06	7.8130e+05	8.7233e+06	1.396e+04	-2.993e+05	-6.534e+02	451.000
.MAST4.4_434	0.0000	0.0000	0.0000	0.0000e+00	0.0000e+00	0.0000e+00	0.000e+00	0.000e+00	0.000e+00	0.000
HGA SYSTEM	147.7500	-3.3583	-117.6300	3.8162e+05	4.8284e+05	1.6357e+05	-4.133e+02	-6.689e+02	1.406e+05	285.500
.SHORT BOOM 8/5/92	140.7500	-3.5000	-72.9310	6.6274e+03	6.6274e+03	1.0416e+01	0.000e+00	0.000e+00	-2.341e-04	9.500
.HINGE_VOL	140.7500	-3.5000	-27.2000	1.7225e+02	1.9325e+02	2.2100e+02	0.000e+00	0.000e+00	0.000e+00	12.000
.HGA (VENDOR DATA)	184.0900	-3.5000	-76.7580	8.1735e+04	1.2713e+05	5.4418e+04	2.037e-04	0.000e+00	6.166e+04	20.000
..DISH-4.5-SPAR	0.0000	0.0000	0.0000	0.0000e+00	0.0000e+00	0.0000e+00	0.000e+00	0.000e+00	0.000e+00	0.000
..RF BOX-SPAR	0.0000	0.0000	0.0000	0.0000e+00	0.0000e+00	0.0000e+00	0.000e+00	0.000e+00	0.000e+00	0.000
..GIMBAL-COMPACT	0.0000	0.0000	0.0000	0.0000e+00	0.0000e+00	0.0000e+00	0.000e+00	0.000e+00	0.000e+00	0.000
..HYBRID-SPAR	0.0000	0.0000	0.0000	0.0000e+00	0.0000e+00	0.0000e+00	0.000e+00	0.000e+00	0.000e+00	0.000
..HGA SUPPT-CYL	0.0000	0.0000	0.0000	0.0000e+00	0.0000e+00	0.0000e+00	0.000e+00	0.000e+00	0.000e+00	0.000
..-Z RELEASE ASSY	183.9000	-3.5000	-77.0820	1.6569e+04	2.7315e+04	1.4015e+04	-4.477e+03	-4.918e+03	1.359e+04	5.000
...-Z NODE BRACKET	233.6400	-21.5000	-22.4370	8.5227e+00	9.3405e+00	1.4220e+01	0.000e+00	0.000e+00	-2.763e+00	2.500
...BOX BRACKET	134.1500	14.5000	-131.7300	1.0471e+01	4.3132e+00	1.0079e+01	0.000e+00	0.000e+00	-5.592e-01	2.500
..-Z RELEASE ASSY	183.9000	-3.5000	-77.0820	1.6569e+04	2.7315e+04	1.4015e+04	4.477e+03	4.918e+03	1.359e+04	5.000
...-Z NODE BRACKET	233.6400	14.5000	-22.4370	8.5227e+00	9.3405e+00	1.4220e+01	0.000e+00	0.000e+00	-2.763e+00	2.500
...BOX BRACKET	134.1500	-21.5000	-131.7300	1.0471e+01	4.3132e+00	1.0079e+01	0.000e+00	0.000e+00	-5.592e-01	2.500
..+Z RELEASE ASSY	184.2900	-3.5000	-76.4340	2.4297e+04	3.6250e+04	1.3193e+04	2.758e+03	3.784e+03	1.724e+04	5.000
...BOX BRACKET	134.1500	-14.5000	-145.2300	1.0471e+01	4.3132e+00	1.0079e+01	0.000e+00	0.000e+00	-5.592e-01	2.500
...+Z NODE BRACKET	234.4300	7.5000	-7.6413	1.9016e+01	1.4574e+01	9.8046e+00	0.000e+00	0.000e+00	-2.772e+00	2.500
..+Z RELEASE ASSY	184.2900	-3.5000	-76.4340	2.4297e+04	3.6250e+04	1.3193e+04	-2.758e+03	-3.784e+03	1.724e+04	5.000
...BOX BRACKET	134.1500	7.5000	-145.2300	1.0471e+01	4.3132e+00	1.0079e+01	0.000e+00	0.000e+00	-5.592e-01	2.500
...+Z NODE BRACKET	234.4300	-14.5000	-7.6413	1.9016e+01	1.4574e+01	9.8046e+00	0.000e+00	0.000e+00	-2.772e+00	2.500
.HGA MASSPROPS DP	143.3000	-3.3300	-129.8900	4.8798e+04	3.3406e+04	3.7721e+04	-2.331e+02	-1.730e+02	-7.490e+02	238.000
.MIDBOOM RESTR MASS	228.3900	-3.5000	-19.3220	1.0000e+00	1.0000e+00	1.0000e+00	0.000e+00	0.000e+00	0.000e+00	6.000

DCC080393

20001390
30 July 1993

(This page intentionally left blank.)

PN20005405
CAGE No. 49671
30 July 1993

(Preliminary) Spacecraft Assembly Plan for EOS–AM Spacecraft (VRD–800)

Prepared under:
Contract NAS5–32500
NASA Goddard Space Flight Center
Greenbelt, Maryland 20771

Prepared by:
Martin Marietta Corporation
Astro Space
P.O. Box 800
Princeton, New Jersey 08543–0800

DCC070993

(This page intentionally left blank.)

REVISION LOG

This log identifies those portions of this document which have been revised since the original issue. Revised portions of each page, for the current revision only, are identified by marginal striping.

Revision	Paragraph Number(s) Affected	Rev. Date	Approval
Preliminary		07/30/93	ELS

(This page intentionally left blank.)

TABLE OF CONTENTS

SECTION / PARAGRAPH	TITLE	PAGE
1	INTRODUCTION	1
1.1	Purpose	1
1.2	Scope	1
1.3	Summary	1
1.4	General Objectives	2
2	APPLICABLE DOCUMENTS	3
2.1	Government Documents	3
2.2	Martin Marietta Astro Space Documents	3
3	SPACECRAFT ASSEMBLY OVERVIEW	5
3.1	Spacecraft Assembly Management and Planning	5
3.1.1	Preliminary Assembly Planning	5
3.1.2	Detailed Assembly Planning and Procedure Development	6
3.2	Hardware Integration Assembly	6
3.2.1	Major Assemblies	6
3.2.2	Spacecraft Assembly	6
3.2.3	Launch Site Integration	6
3.3	Schedule	7
4	ORGANIZATIONAL ROLES AND RESPONSIBILITIES	9
4.1	Integration and Test	9
4.2	Engineering	9
4.3	Manufacturing	9
4.4	Quality Assurance/Product Assurance	10
4.5	Environmental Health and Safety	10
4.6	NASA–GSFC	10
5	DOCUMENTATION	11
5.1	Integration and Test Documentation	11

TABLE OF CONTENTS (Continued)

SECTION / PARAGRAPH	TITLE	PAGE
5.1.1	Integration Procedure and Record	11
5.1.1.1	Spacecraft IPR	11
5.1.1.2	Equipment Module IPR	15
5.1.1.3	Assembly IPRs	16
5.1.2	Flow Alteration Record	16
5.2	Design Controls	16
6	MAJOR ASSEMBLY INTEGRATION PROCESS	17
6.1	Spacecraft Structure Assembly	17
6.2	Equipment Module Assembly	17
6.2.1	Communication/Command and Data Handling Equipment Module	22
6.2.2	Power Equipment Module/Hex Bay Battery Module	27
6.2.3	Recorder Equipment Module (Rec EM)	31
6.2.4	Direct Access (DAS) Equipment Panel	32
6.2.5	Guidance, Navigation and Control Sensor Equipment Module	35
6.2.6	RWA Equipment Module	35
6.3	Solar Array Assembly	37
6.4	High Gain Antenna (HGA) Assembly	37
6.5	Propulsion Module Assembly (PM)	37
7	SPACECRAFT ASSEMBLY INTEGRATION PROCESS	41
7.1	Spacecraft Structure Assembly Handling	41
7.2	Electrical Accommodations Subsystem Installation	45
7.3	Propulsion Module Installation	45
7.4	Installation of the Power Subsystem Equipment	45
7.5	Installation of C&DH/Comm Equipment Module and Related Hardware	48
7.6	Installation of the Recorder Equipment Module	48
7.7	Installation of the DAS Panel Equipment Module	48
7.8	Installation of the Guidance, Navigation, and Control Equipment	48
7.9	Installation of Capillary Pumped Heat Transport System and the Heater Control Electronics Components	49

TABLE OF CONTENTS (Continued)

SECTION / PARAGRAPH	TITLE	PAGE
7.10	Fit Check of the Solar Array and HGA Deployment Assemblies	50
7.11	Instrument Integration	50
7.11.1	Instrument Accommodation Equipment Integration	50
7.11.2	Instrument Mechanical Integration	52
7.11.2.1	ASTER Mechanical Integration	54
7.11.2.2	CERES Mechanical Integration	54
7.11.2.3	MISR Mechanical Integration	54
7.11.2.4	MODIS Mechanical Integration	54
7.11.2.5	MOPITT Mechanical Integration	54
7.11.3	Instrument to Spacecraft Alignment	54
7.11.4	Instrument Cold Plate Mechanical Integration	55
7.11.5	Instrument Electrical Integration	55
7.12	Thermal Blanket Installation	56
7.13	Installation of the Solar Array and HGA Deployment Assemblies	56
7.14	Installation of Flight Launch Vehicle Adapter	56
7.15	Installation of Flight Batteries	56
7.16	Spacecraft Preparations for Shipment	57
8	LAUNCH SITE INTEGRATION	59
8.1	Spacecraft Inspection and Removal From Container	59
8.2	HGA Reflector Installation	59
8.3	Spacecraft Fuel Loading	59
8.4	Spacecraft Mechanical Closeout and Final Inspection	62
8.5	Install Launch Vehicle Fairing	62
8.6	Launch Vehicle Integration	62
8.7	Final Spacecraft Closeouts	62
9	NOTES	63
9.1	Acronyms and Abbreviations	63

LIST OF FIGURES

FIGURE	TITLE	PAGE
1	EOS–AM Integration and Test Schedule	8
2	I&T Requirement/Document Flow	12
3	CTP Documentation and I&T Assembly Plan Coverage	13
4	Integration Procedure and Record	14
5	EOS–AM Spacecraft IPR	15
6	Equipment Module IPR	15
7	EM Generic Assembly Flow	18
8	Strongback Fixture	19
9	Turnover Cart with Panels	19
10	EM/Panel Nomenclature	20
11	Lifting Panel from Turnover Cart	22
12	Base Panel and EM Integration Flow Diagram	23
13	Front Panel Integration	24
14	Top Panel Integration	24
15	Battery Panel Assembly	28
16	Base Panel and EM Integration Flow Diagram for Power EM	29
17	DAS Equipment Panel Integration	34
18	Sensor EM/Base Panel Integration	36
19	Propulsion Module Assembly	39
20	Propulsion Module Assembly in Turnover Fixture	40
21	Propulsion Module Assembly Flow	40
22	EOS–AM Spacecraft Configuration	42
23	Spacecraft Integration Flow	43
24	Spacecraft Test Flow	44
25	Three–Axis Positioner (TAP)	46
26	Propulsion Module Installation	47
27	Instrument Integration Flow	51
28	Instrument Locations on Structure	53
29	Spacecraft Launch Site Flow	60
30	Spacecraft/Launch Vehicle Integration Activities	61

LIST OF TABLES

TABLE	TITLE	PAGE
I	COMM/C&DH EM Integration Flow Support	25
II	COMM/C&DH Front EP Integration Flow Support	27
III	COMM/C&DH Top EP Integration Flow Support	27
IV	Battery Panel Integration Flow Support	30
V	Power Equipment Module Integration Flow Support	31
VI	Rec EM and Base EP Integration Flow Support	32
VII	Rec Front EP Integration Flow Support	32
VIII	Rec Top EP Integration Flow Support	32
IX	DAS Panel Integration Flow Support	32
X	Sensor EM and Optical Bench Base EP Integration Flow Support	35
XI	Sensor Front EP Integration Flow Support	35
XII	Sensor Optical Bench (Base) EP Integration Flow Support	35
XIII	RWA EM and Base EP Integration Flow Support	37
XIV	RWA Front EP Integration Flow Support	37
XV	RWA Top EP Integration Flow Support	37
XVI	Propulsion Module Integration Flow Support	38

TBD LOG

ITEM	SECTION	PAGE	SUBJECT	RESP.	DUE
TBD–1	Table I	25	Comm/C&DH	K. Schutter	CDR
TBD–2	Table II	27	Comm/C&DH Front EP	K. Schutter	CDR
TBD–3	Table III	27	Comm/C&DH Top EP	K. Schutter	CDR
TBD–4	Table IV	30	Battery Panel	K. Schutter	CDR
TBD–5	Table V	31	Power Equipment Module	K. Schutter	CDR
TBD–6	Table VI	32	Rec EM	K. Schutter	CDR
TBD–7	Table VII	32	Rec Front EP	K. Schutter	CDR
TBD–8	Table VIII	32	Rec Top EP	K. Schutter	CDR
TBD–9	Table IX	32	DAS Panel	K. Schutter	CDR
TBD–10	Table X	35	Sensor EM	K. Schutter	CDR
TBD–11	Table XI	35	Sensor Front EP	K. Schutter	CDR
TBD–12	Table XII	35	Sensor Optical Bench	K. Schutter	CDR
TBD–13	Table XIII	37	RWA EM	K. Schutter	CDR
TBD–14	Table XIV	37	RWA Front EP	K. Schutter	CDR
TBD–15	Table XV	37	RWA Top EP	K. Schutter	CDR
TBD–16	Table XVI	38	Propulsion Module	K. Schutter	CDR
TBD–17	7.2	45	Grounding procedure	E. Shade	CDR
TBD–18	7.14	56	Launch Vehicle ICD number	E. Shade	CDR
TBD–19	Figure 30	59	Spacecraft–to–Launch Vehicle integration activities	E. Shace	CDR
TBD–20	8.4	62	Spacecraft closeout and final inspection	E. Shade	CDR
TBD–21	8.5	62	Installation of Launch Vehicle fairing	E. Shade	CDR
TBD–22	8.6	62	Launch Vehicle integration	E. Shade	CDR
TBD–23	8.7	62	Final Spaceraft closeouts	E. Shade	CDR

1 INTRODUCTION

1.1 Purpose

The purpose of the Spacecraft Assembly Plan for the Earth Observing System (EOS–AM) Spacecraft is to provide the details of the processes and philosophy associated with the mechanical assembly of the Equipment Modules (EMs) and the mechanical integration of the spacecraft. Assembly planning activities by the I&T organization begin with a review of preliminary concepts and designs of the Spacecraft and its major assemblies. This activity leads to the development of a comprehensive Spacecraft Assembly Plan. This plan will provide an overall summary of the efforts/activities required to assemble a fully integrated Spacecraft and will be used as a basis for the generation of detailed assembly flows, procedures, and schedules.

1.2 Scope

The assembly plan presented in this document describes a process where flight hardware is systematically integrated in accordance with engineering design prior to being exposed to system level testing. The assembly process is a time phased process designed to provide a logical flow of integration and test activities for the various EOS Spacecraft components, subsystems, EMs, major assemblies, and instruments which ultimately results in a fully integrated EOS–AM Spacecraft. Checkout activities are accomplished at intermediate levels of assembly and verification activities are done at the end of major integration activities such as an assembled EM. All test activities above component level test are described in the Spacecraft and Subsystem Test Plan, PN20008664 or the Equipment Module Test Plans. Tasks which contain both assembly and test operations will have the necessary hand–off of responsibility identified in both the assembly and test plans, as required.

1.3 Summary

This document provides information related to the mechanical assembly processes that are required to build the flight hardware assemblies mentioned above. An overview of the Spacecraft assembly process, including integration scheduling, is initially discussed and presented in Section 3 to show the overall integration period, and to show the relationship of assembly, electrical integration, test, and launch preparation. Section 4 describes the organizational roles and responsibilities during the Spacecraft assembly process. The documentation used to control and record the assembly process is discussed in Section 5.

The levels of assembly and their descriptions are organized as follows:

a. Section 6, Major Assemblies (EMs, HGA, S/A, PM) assembly

b. Section 7, Spacecraft assembly

c. Section 8, Launch Site assembly and closeout activities

1.4 General Objectives

The objectives of this assembly plan are as follows:

a. Show the relationship of controlling documentation to the assembly process.

b. Provide a general flow of assembly activities.

c. Describe the major assembly activities beginning at the Equipment Module (EM) level.

d. Describe how the major mechanical ground equipment items will be used to support the assembly processes.

e. Explain the type of procedures which will be used to document the detailed assembly process.

f. Discuss organizational responsibilities and management of the assembly plan.

g. Provide an integration and test period overview.

2 APPLICABLE DOCUMENTS

The following documents of the exact revision shown, form part of this plan to the extent specified herein. In the event of a conflict between the documents referenced herein and the contents of this plan, this document shall take precedence.

2.1 Government Documents

GSFC–421–10–01	Requirements Document for the EOS–AM Spacecraft (RD)
GSFC–415–EOS–004	Performance Assurance Requirements (PAR)
GSFC 420–03–02	General Instrument Interface Specification (GIIS)

2.2 Martin Marietta Astro Space Documents

PN20001407	GN&C Sensor Equipment Module Test Plan
PN20001408	Power Equipment Module and Battery Panel Test Plan
PN20001409	GN&C Reaction Wheel Assembly Equipment Module Test Plan
PN20001411	Test Plan for the Recorder Equipment Module
PN20001412	Contamination Control Plan for the EOS–AM Spacecraft
PS20005396	EOS–AM Spacecraft Contract End Item Specification (CEI) (SEP–101)
IS20008501	General Interface Specification (GIS) (ICD–101)
PN20005404	EOS–AM Verification Plan (VRD–100)
PS20005404	EOS–AM Verification Specification
PN20005397	Performance Assurance Implementation Plan (PAIP) (PA–100)
PN20005869	EOS–AM Spacecraft Electromagnetic Compatibility Control Plan (SEP–106)
PN20008522	Launch Site Plan (OP–510)
PN20008571	Direct Access System Panel Test Plan

PN20008618	Propulsion Module Test Plan for EOS–AM Spacecraft
PN20008660	EOS–AM Spacecraft Alignment Plan (SEP–121)
PN20008664	Spacecraft and Subsystem Test Plan (SSTP) (VRD–105a)
PN20008745	Test Plan for the Communication/Command and Data Handling Equipment Module
20008698	Procedure for Control of Unscheduled Activities During Integration and Verification Testing
Source:	Martin Marietta Astro Space P. O. Box 800 Princeton, NJ 08543–0800

3 SPACECRAFT ASSEMBLY OVERVIEW

The EOS–AM Spacecraft consists of a spacecraft structure to which are attached major assemblies and scientific instruments. The structure is composed of graphite/epoxy struts bonded to titanium end fittings. The major assemblies consist of equipment modules, the solar array assembly, the high gain antenna and deployment assembly, and the propulsion module. The equipment modules contain subsystem related electronic hardware and provide a modular means to assemble and test the spacecraft. The major assemblies integrated to the spacecraft structure form the spacecraft bus which provides the necessary resources (power, command, telemetry, thermal control, etc.) required to support the payload in meeting its scientific mission objectives.

Each major assembly and instrument that makes up the Spacecraft system will be assembled and tested as completely as is practical prior to integration with the Spacecraft bus. Additionally, if required, the EMs can be electrically integrated as a subsystem with the aid of STE and tested for interface compatibility prior to integration with the Spacecraft bus. These pre–Spacecraft verification steps are designed to minimize Spacecraft level problems and schedule impacts. This plan also depends upon parallel integration activities in order to minimize the overall time required to complete the assembly activities.

3.1 Spacecraft Assembly Management and Planning

Spacecraft assembly planning is the responsibility of the I&T organization. I&T activities are divided into a series of elements which take the EOS–AM assembly process from a management and planning phase through design, buildup, test, and pre–launch checkout of the Spacecraft. The management and planning portion of that overall process contributes to the initial inter–relationship of documentation, verification, assembly, and scheduling. This planning effort will also help management to assure that manpower, equipment, and facilities are adequately provided for and that the requirements of the EOS–AM Program are being met.

3.1.1 Preliminary Assembly Planning

During the preliminary design phase of the program, the primary assembly related I&T tasks are planning and the review of engineering designs for producibility. It is during this time that both the Spacecraft Assembly Plan and the Spacecraft and Subsystem Test Plan are developed. I&T engineers will review specifications, layouts, and drawings to develop an assembly flow plan for the spacecraft and its major assemblies. These plans are developed with consideration for ease of assembly, facility constraints, optical alignment requirements, accessibility, cost effectiveness, and operator safety. I&T will provide feedback/suggestions to design engineering regarding these issues so that a more producible and cost effective design can be achieved. I&T will develop requirements for the Mechanical Ground Support Equipment (MGSE) necessary to support the assembly and testing processes.

The I&T organization is a part of concurrent engineering for the EOS–AM Program as a member of the product development teams for each subsystem. This involvement enables I&T to be aware of and help resolve issues early in the program which may affect EOS–AM integration activities. I&T support to Spacecraft and subsystem design reviews is an important part of the concurrent engineering process.

3.1.2 Detailed Assembly Planning and Procedure Development

The next phase of activity is the detailed assembly planning and procedure development. This activity will begin when the subsystem CDRs have been completed and continues until the hardware is received by I&T for assembly. The Spacecraft Assembly Plan will be updated to incorporate the latest I&T plans based on the completion of the Spacecraft detailed design. I&T will also verify that the design of MGSE is adequate to support the updated Assembly Plan. Assembly IPRs (see Section 5) will be generated by I&T for all Spacecraft and major assembly operations beginning at the EM level. All component and structure level assembly and testing will be performed by Manufacturing prior to hardware delivery to I&T. The combination of the Spacecraft Assembly Plan and the issued engineering drawings will form a basis for procedure development. The Spacecraft IPR will also be written to document the flow of all I&T activities and to direct the implementation of IPRs and TPs.

3.2 Hardware Integration Assembly

The I&T assembly activity will encompass the final assembly of the EOS–AM Spacecraft into flight configuration starting with the component integration into the EM structures and ending with the Spacecraft closeout activities at the launch site. This task will include implementing and maintaining the Assembly IPRs as well as generating Flow Alteration Records (FARs) for unplanned work or rework operations. A more detailed description of the assembly activities is described in sections 6, 7, and 8 of this document.

3.2.1 Major Assemblies

The major assemblies of the EOS–AM Spacecraft are the High Gain Antenna and Deployment System, the Solar Array Assembly, the Propulsion Module, the Spacecraft Structure Assembly, and the Equipment Modules. I&T is responsible for the assembly and testing of the EMs prior to installation onto the Spacecraft. The remaining major assemblies are completely assembled by manufacturing or a subcontractor with the exception of the HGA, which is not fully assembled until it is mechanically integrated to the Spacecraft. Section 6 discusses the I&T assembly activities for major assemblies.

3.2.2 Spacecraft Assembly

The final assembly of the EOS–AM Spacecraft is performed by the I&T organization. This effort includes the mechanical integration of the completed major assemblies and other equipment/ components which mount to the spacecraft structure assembly. This activity is discussed in Section 7.

3.2.3 Launch Site Integration

Launch site integration activities begin with the arrival of the Spacecraft at Vandenburg AFB. These activities include the installation of any flight equipment which was removed for shipping, fuel loading, mechanical closeout operations, removal of non–flight protective covers, and final inspection. These activities are discussed in Section 8.

3.3 Schedule

A schedule of the major tasks associated with the integration activities is summarized in Figure 1.

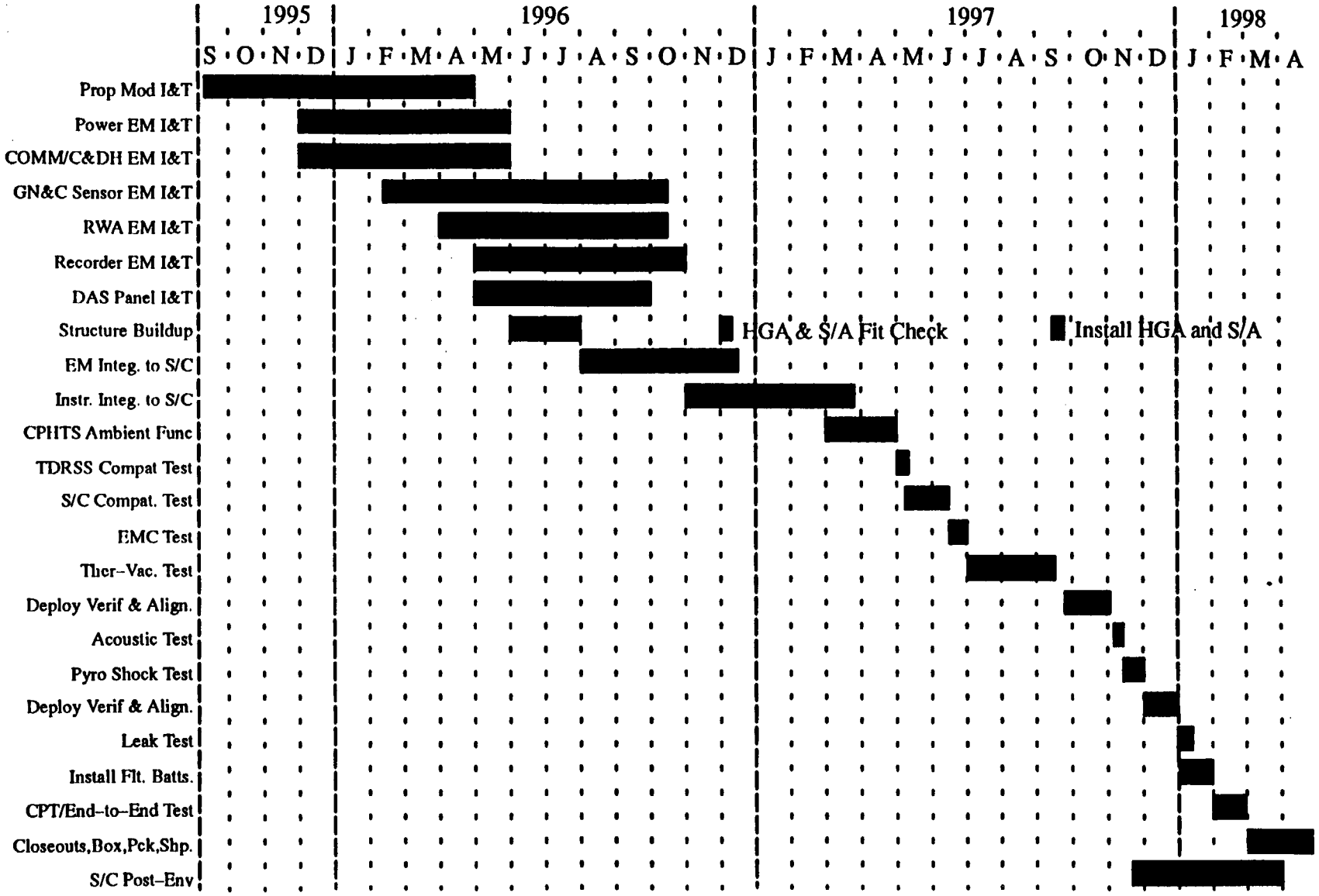

Figure 1. EOS–AM Integration and Test Schedule

4 ORGANIZATIONAL ROLES AND RESPONSIBILITIES

The following organizations will provide the defined support for the assembly of the EOS–AM Spacecraft and major assemblies. Each individual working on the assembly activities of the program is required to understand and exercise safety related practices. Each individual is equally responsible, regardless of job classification, to make recommendations, immediately if necessary, to assure the continued safety of the personnel and the test article. The personnel appraise themselves of the safety aspect of their assignments. Critical assignments such as pyro handlers, tug operators, spacecraft handlers, crane operators, and mate/demate personnel, are specially trained and certified by the Quality Assurance and/or EHS personnel.

4.1 Integration and Test

The Integration and Test Organization will provide the following:

a. Generate Assembly Plan.

b. Assembly planning direction and management.

c. Integration Procedure and Records (IPRs) and updates.

d. Flow Alteration Records (FARs) for unplanned or rework operations.

e. Control and conduction of Spacecraft assembly operations.

f. Control and conduction of Spacecraft alignment operations.

g. Preparation and maintenance of appropriate logbooks.

h. Assistance in resolution of assembly anomalies.

4.2 Engineering

Engineering will provide the following:

a. Review of Assembly Plan.

b. Requirements (drawing definition) for all assembly operations.

c. Support to Spacecraft assembly operations as required.

d. Participation in the resolution of anomalies.

e. Review all Integration Procedure and Records.

4.3 Manufacturing

Manufacturing will provide the following:

a. Production control services for the timely delivery of components and hardware to I&T for assembly activities.

b. Provide Manufacturing Engineering and/or technician support for unplanned or rework operations requiring specific skills.

4.4 Quality Assurance/Product Assurance

Quality Assurance/Product Assurance will provide the following:

a. Review of Assembly Plan.

b. Training and certification of personnel for critical operations.

c. Inspection of all components delivered to I&T for damage and completeness of paperwork.

d. In–line/in–process inspection of Spacecraft assembly operations.

e. Assistance in the resolution of anomalies.

f. Review/approve IPRs and FARs.

4.5 Environmental Health and Safety

Environmental Health and Safety will provide the following:

a. Instruction on the implementation of safety practices and procedures.

b. Instruction on the proper use of personal and hardware safety equipment.

4.6 NASA–GSFC

NASA–GSFC shall provide the following:

a. Review of this document.

b. Review of all Spacecraft level IPRs.

c. Assistance in the resolution of anomalies.

d. Technical support for the installation assembly of all GFE.

e. Support from each Instrument Provider for the installation of each instrument.

5 DOCUMENTATION

5.1 Integration and Test Documentation

The Spacecraft assembly process is responsive to a variety of documents. These documents include GSFC requirements documents and Martin Marietta Astro Space (Astro Space) EOS Project unique documents as well as Astro Space standard policy instructions. Those documents which affect the integration planning activity are used by I&T as controlling, reference, or applicable documents to aid in the planning, management, design, and implementation of the I&T tasks. Figure 2 shows the I&T Requirement/Document Flow.

The Spacecraft and Subsystem Test Plan (SSTP), PN20008664, establishes the requirements and defines the implementation for testing the EOS–AM Spacecraft and its subsystems in accordance with the Verification Plan, PN20005404. The combination of the Spacecraft and Subsystem Test Plan, the Equipment Module Test Plans, and this document, the Spacecraft Assembly Plan, completely describes all I&T activities required to assemble and test the Spacecraft. Figure 3 shows the relationship of this assembly plan with the test plans for components, major assemblies, subsystems, and the Spacecraft. For a description of the testing required at intermediate levels of the spacecraft assembly, this document will refer to the SSTP. Testing requirements for the Equipment Modules are described in separate test plans which have been written for each EM.

5.1.1 Integration Procedure and Record

The Integration Procedure and Record (IPR) is a standard Astro Space document which is used to provide assembly direction and serve as a record of all spacecraft operations. The standard IPR cover sheet is shown in Figure 4. The IPR describes the operations to be performed along with the required operator acknowledgement and defines the points at which Astro Space Quality Assurance and customer (DPRO) inspections are to be performed. Test Procedures (TPs) are used to document spacecraft test operations. The types of IPRs which will be used on the EOS–AM Program are described below in sections 5.1.1.1 thru 5.1.1.3.

5.1.1.1 Spacecraft IPR

The EOS–AM Program will have one Spacecraft IPR, designated IPR–S/C–20008500. This IPR provides a top level roadmap of the Spacecraft build–up and test flow as defined by the Spacecraft Test and Assembly Plans. It resides in the Spacecraft Documentation ("Doc") Folder. All spacecraft assembly IPRs and spacecraft level Test Procedures (TPs) flow down from this document. This IPR provides the overall direction and record of assembly and test for all Spacecraft I&T activities. Detailed assembly and test instructions are not included in this IPR but are contained in the Assembly IPRs and TPs which are directed from it. Figure 5 shows the relationship of the Spacecraft IPR with the assembly IPRs and TPs.

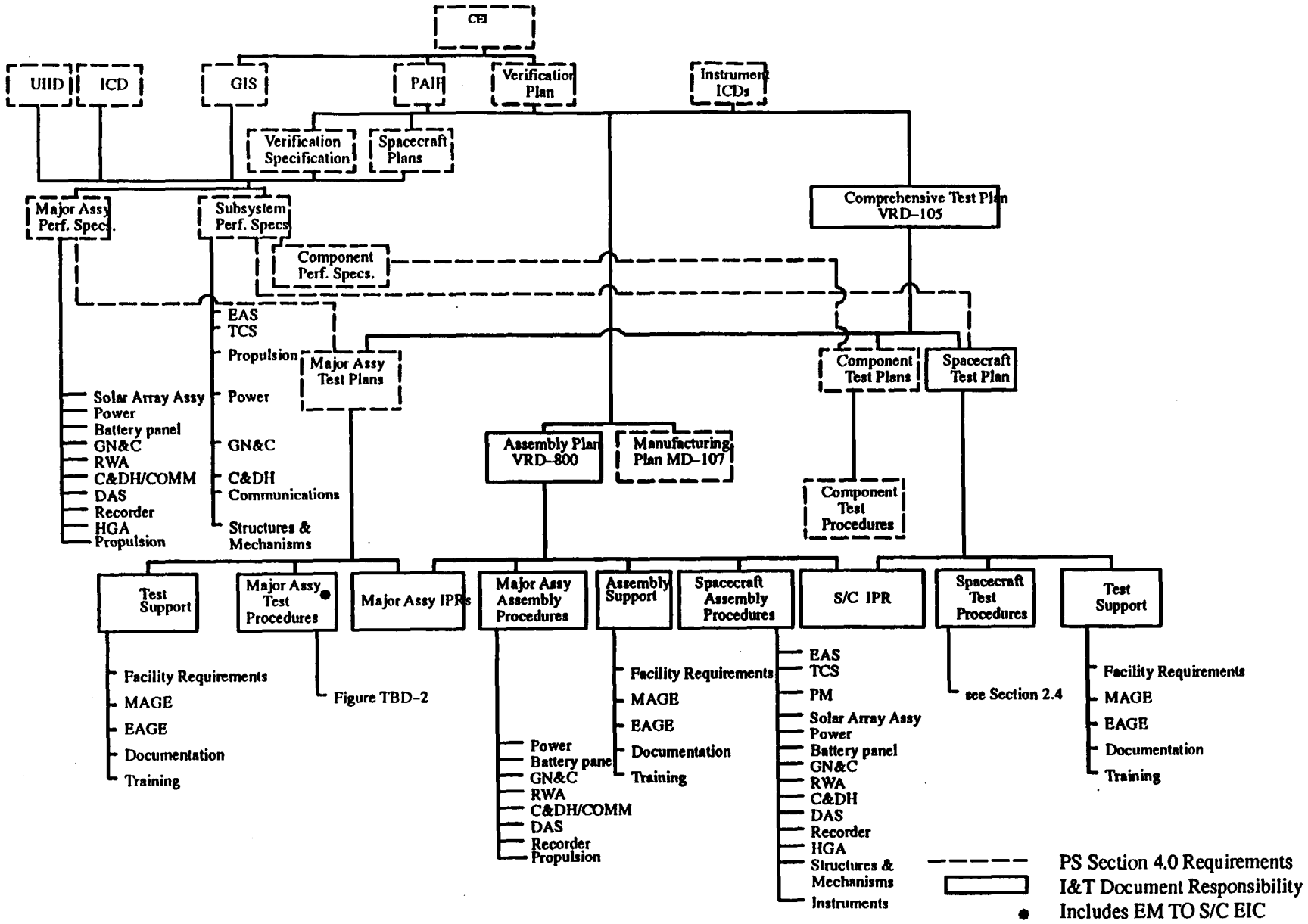

Figure 2. I&T Requirement/Document Flow

PN20005405
30 July 1993

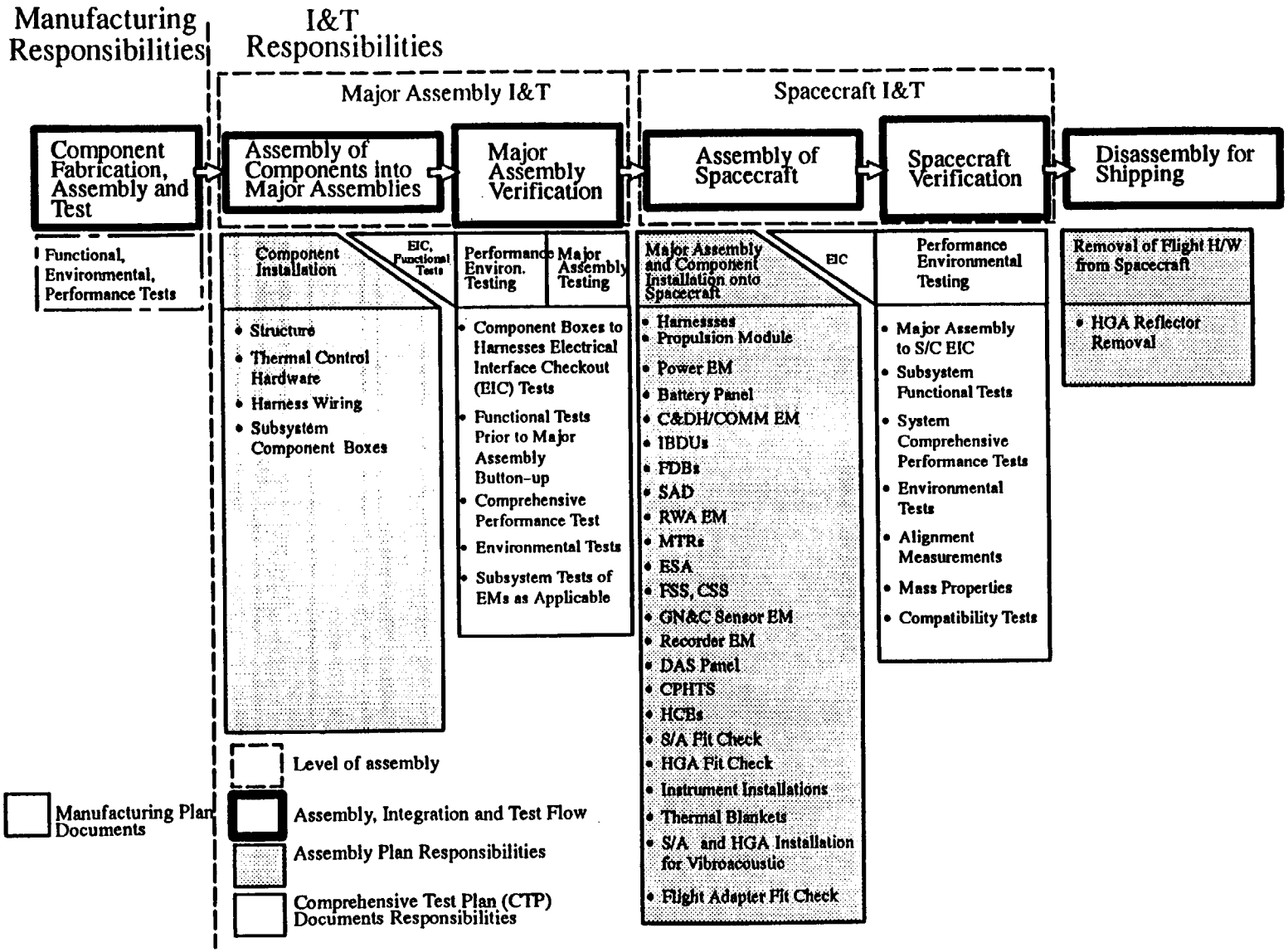

Figure 3. CTP Documentation and I&T Assembly Plan Coverage

Revisions		Rev	
Ltr	Description	Date	Approved
	EXAMPLE		

Revision Record Continued on Sheet _____

Serial Number of Equipment _____

Final Data Review QA _____ Date _____

Project EOS–AM	Contract No. NAS5–32500	MARTIN MARIETTA	Martin Marietta Astro Space East Windsor, NJ Valley Forge, PA
	Written Date	Integration Procedure and Record	
	Approved Date		
	Approved Date	Size A	Code Ident No. 49671	IPR–
	Issued Date		Sheet 1 of XX

Figure 4. Integration Procedure and Record

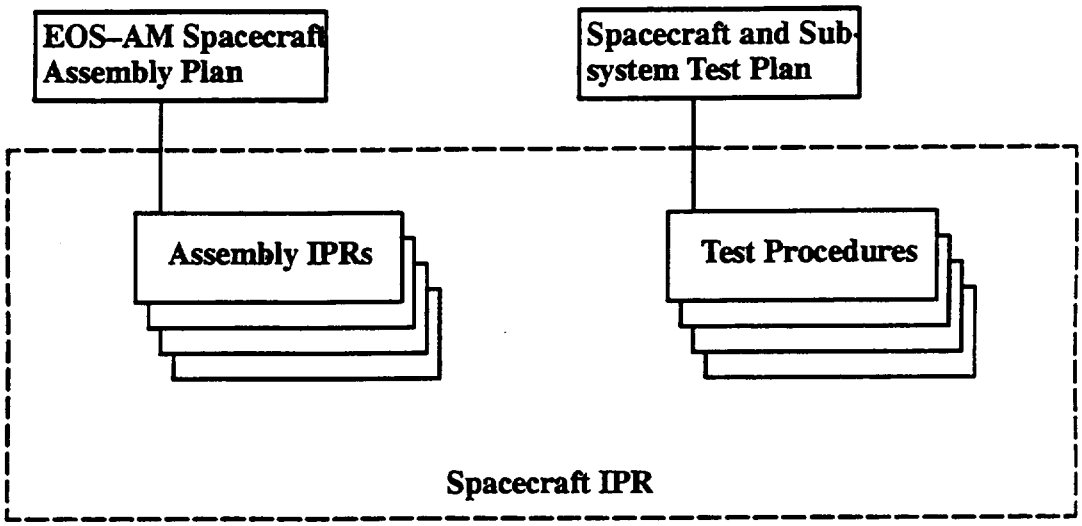

Figure 5. EOS–AM Spacecraft IPR

5.1.1.2 Equipment Module IPR

Each of the Equipment Modules (EMs) on the EOS–AM Program has an Equipment Module IPR to provide a top level flow of assembly and test operations for the EM. All EM assembly IPRs and EM level TPs flow down from the EM IPR. The EM IPR is similar in format to the Spacecraft IPR described above. Figure 6 shows the relationship of the Equipment Module IPR with the assembly IPRs and TPs.

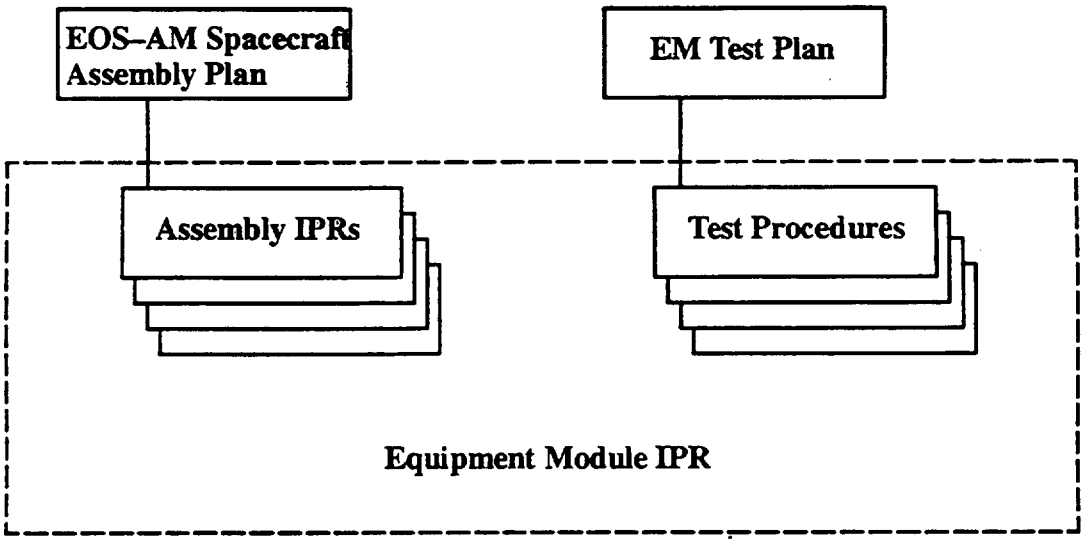

Figure 6. Equipment Module IPR

5.1.1.3 Assembly IPRs

Assembly IPRs contain the instruction and direction for implementing the assembly operations required by the Spacecraft IPR or the EM IPR. Detailed instructions are included to mechanically integrate/assemble the Spacecraft or major assemblies per the appropriate engineering drawings and process specifications. By comparison, all test operations will be directed by TPs as described in the SSTP.

5.1.2 Flow Alteration Record

The Flow Alteration Record (FAR) is a standard Astro Space document which is used to provide direction for unplanned or rework operations. FARs are generated on an as needed basis to provide a record of all assembly operations that are not documented in an existing IPR. The FAR will contain the detailed instructions required to perform the additional work including the necessary Astro Space and DPRO inspection points. The usage of FARs is also described in the Procedure for Control of Unscheduled Activities During Integration and Verification Testing, 20008698.

5.2 Design Controls

The mechanical integration of the EOS–AM Spacecraft is performed per procedures described in the Assembly IPRs. These IPRs will describe an integration process which is in accordance with assembly drawings and process specifications issued by Design Engineering. The procedure for configuration management of I&T documentation is described in the Spacecraft and Subsystem Test Plan, PN20008664, and the Procedure for Control of Unscheduled Activities During Integration and Verification Testing, 20008698.

6 MAJOR ASSEMBLY INTEGRATION PROCESS

This section describes the integration activities to be performed by I&T for the major assemblies of the EOS–AM Spacecraft. These activities include all flight hardware assembly and electrical integration activities which are required at the major assembly level. Installation and check–out of the major assemblies to the spacecraft are described in section 7.0 of this document. The spacecraft major assemblies are the High Gain Antenna and Deployment System, the Solar Array Assembly, the Propulsion Module, the Core Structure Assembly and the Equipment Modules.

The major assemblies are discussed below in the approximate sequence in which they are integrated. These assemblies may, however, be worked in a different sequence or in parallel at the discretion of the I&T Manager. Major assemblies which will be received by I&T fully integrated are briefly discussed to describe the status of the assembly when received.

All hardware and parts required for major assembly integration are accumulated and kitted by Production Control and delivered to I&T. Completed components (i.e. black boxes) are delivered to I&T with closed document folders (i.e. no unapproved or open paperwork) which contain all pertinent test data required for integration. This includes all trending test data.

All hardware received by I&T is inspected for damage and the completeness of the required paperwork. Any hardware that is delivered damaged will be returned to Production Control for disposition. After receipt, the hardware is stored in a designated flight hardware storage area until it is needed for integration. Any damage sustained by the hardware after it has been placed in or removed from this designated flight hardware storage area is handled according to the procedures set forth in document 20008698, Procedure for Control of Unscheduled Activities During Integration and Verification Testing.

Subsystem component hardware is delivered to I&T in the fully–qualified and ready–for–integration condition.

At the completion of the receiving inspection activity, each of the component parts of the major assemblies are either stored in a controlled access storage area or directed into the assembly process for a specific major assembly.

6.1 Spacecraft Structure Assembly

The spacecraft structure is an assembly of individual structural components including longerons, bay tubes, diagonals, node fittings and secondary structure. The structure assembly is covered by Manufacturing Planning Documentation. The structure is delivered to I&T fully assembled and tested for strength and modal requirements. The signal reference plane grounding is also applied as well as some thermal coatings (i.e. paint, tape, etc.) prior to delivery to I&T.

6.2 Equipment Module Assembly

The generic assembly flow of the EMs is shown in Figure 7. This figure includes verification activities to show the overall integration of the EMs.

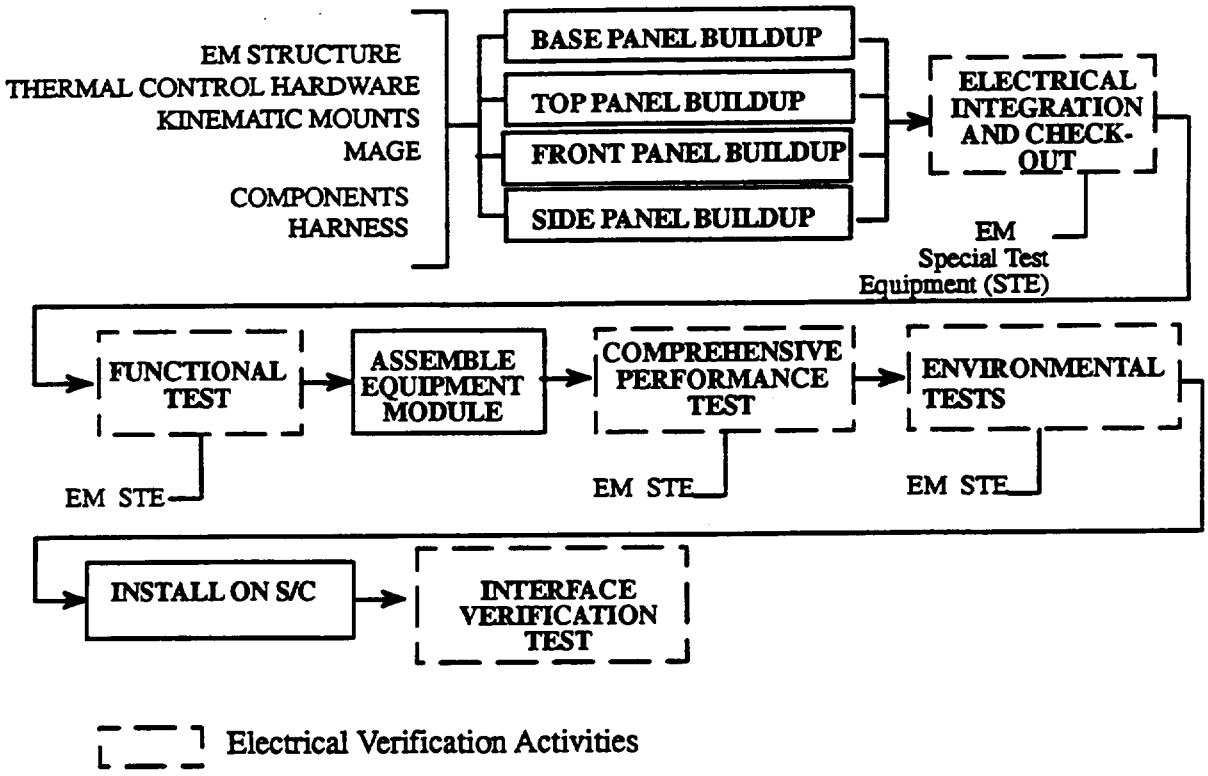

Figure 7. EM Generic Assembly Flow

Any hardware discrepancies with inspection or verification are resolved before that piece of hardware is received and integrated at the levels of assembly performed by I&T. The assembly of the EMs begins with installation of the flight equipment onto the individual structural honeycomb panels which make up a module. The EM structural panels (radiator and non–radiator) are fully prepared for hardware installation when they are received by I&T. The prepared panels include all necessary edgeblock fastener inserts (helicoils) and/or imbedded fastener sleeves (spools) required to either assemble the structural panels together and/or integrate subsystem hardware components onto them. The panel surfaces (inside and out) are painted with thermal coatings if required or covered with tape. The EM panels which contain heat pipes are pre–tested and operational when received by I&T. Heat pipes are considered sealed vessels which will not require any special handling or facility requirements. These equipment panels are be bolted to a MGSE strongback fixture for hardware integration, Figure 8. The strongback fixtures are required to stiffen the panels for equipment installation when they are not assembled as an EM structure. These MGSE strongback fixtures are placed on a turn–over dolly which allows the panel to be positioned in various orientations to facilitate the assembly process and provide necessary access to lift points as shown in Figure 9.

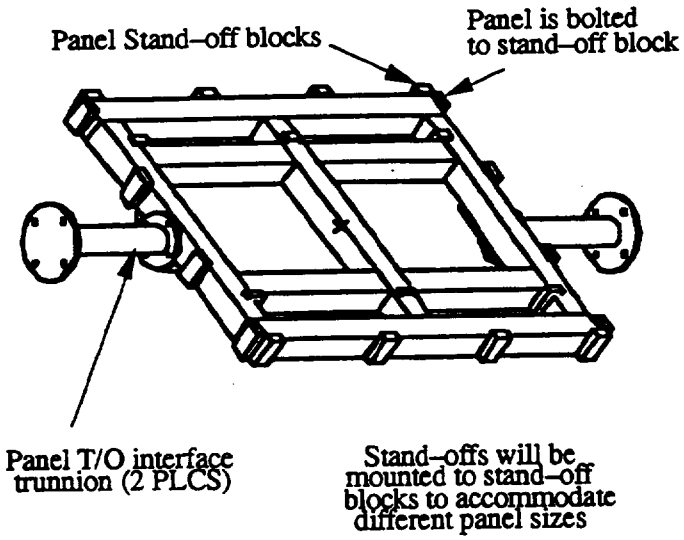

Figure 8. Strongback Fixture

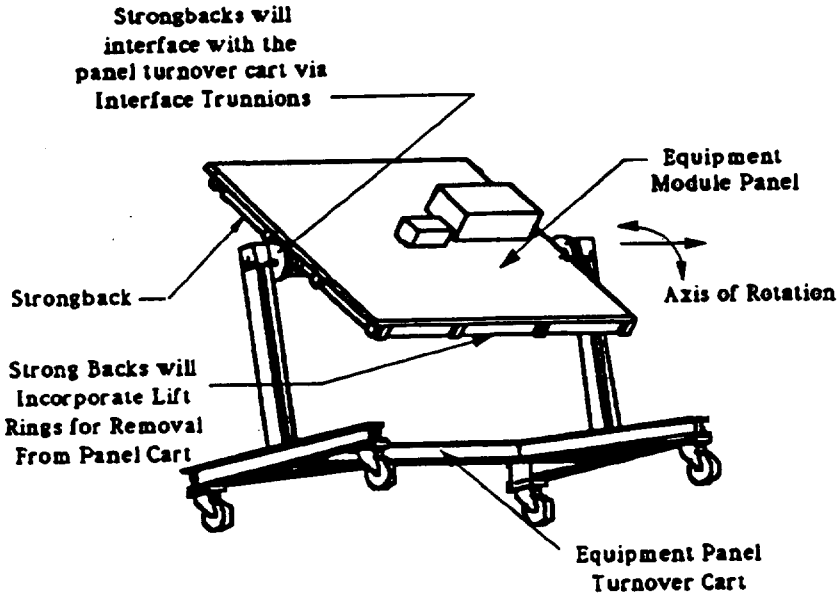

Figure 9. Turnover Cart with Panels

The assembly begins when all of the components are delivered to I&T for a particular panel.

Figure 10 provides the nomenclature used to describe the different panels and their orientation.

The assembly of the EM's takes place in Astro Space's Bay 8 in East Windsor, N.J. which is maintained at a cleanliness level of Class 10,000.

The following is an assembly scenario for an EM beginning with the condition that the panels making up the EM's are mounted to strongbacks which are then mounted to an assembly table or a turn–over cart or directly mounted to an assembly table without a panel strongback.

a. Thermal control hardware (heaters, temperature sensors, etc.) is integrated to the EM panel interior surface per the installation drawing. These may be bonded or secured by fasteners.

b. Harnesses are attached to the EM panel per the harness mockup installation. This order of assembly would assume that the majority of the blackboxes to be installed have side mounted connectors because otherwise, top mounted connectors would make use of harnesses connected to harness support structure. If this were not the case then the harness is installed at a later time (see f). Areas in which harness access may be difficult after component installation have the harness permanently tied down at this time. Otherwise the harnesses are held in place temporarily.

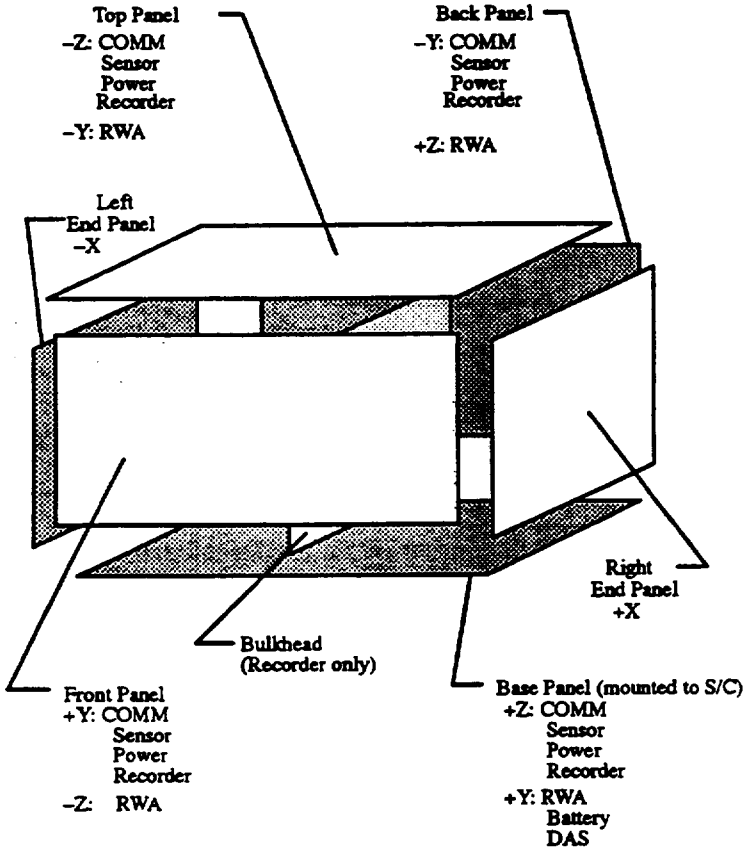

Figure 10. EM/Panel Nomenclature

c. Electronic components (blackboxes) are attached mechanically to the EM panel by threaded fasteners. If brackets are needed to attach the components then they are installed prior to installing the blackboxes.

   Depending on the thermal requirements, some components are installed with thermally conductive adhesive or a thermal gasket at the mounting interface.

d. A component to panel ground bond measurement is taken for each component as described in the assembly procedure.

e. Connector brackets, harness supports, and harness tiedowns are installed on the EM panel per the designated drawings.

f. The panel harness is routed and secured into position on the EM panel harness support structure with tiedowns using the harness mockup as a guide. This assumes that the blackboxes have top mounted connectors.

   In some cases, more than one EM equipment panel in the same EM uses the same harness and the routing is completed after the EM panels sharing that harness are bolted together.

g. Electrical interface checkout procedures are then conducted prior to any connector mating.

h. Connectors are mated at the blackboxes per the electrical integration test procedures.

When all of the equipment panels for a particular EM have been assembled, the electrical verification of the EM begins. Details of the electrical verification are contained in the Test Plan for each EM. This process includes placing the EM panels in close proximity of each other and mating of the flight harness to the components after the initial unpowered portion of the verification is completed by means of breakout boxes. Test jumper harnesses are used if the flight harness does not allow these connections with the modules unassembled. Powered interface checks are then conducted followed by an EM functional test.

At the completion of this portion of the electrical verification, the panels are assembled together to create the module assembly and flight connectors are connected to the component boxes. Figure 11 shows a typical example of how the panels with strongbacks are removed from a turn–over cart so that the panel can be assembled as part of the module. In some instances, like the Power EM, the module is integrated on an EM turn–over fixture which makes use of a strongback that is similar to that used for the EM panels. As each panel is installed, all the final harness routing is performed including the mating of interface connectors at the appropriate interface brackets. The EM is fully assembled except for the back panel. Upon completion of the electrical integration with the module in this configuration, the back panel is installed.

EM level performance testing is conducted in the assembled module configuration, with or without the access back panel, as described in the appropriate EM Test Plan.

Any silver teflon taping associated with external radiators is applied with its protective mylar covering just prior to thermal environment testing. The mylar covering is removed before thermal testing and replaced after thermal testing.

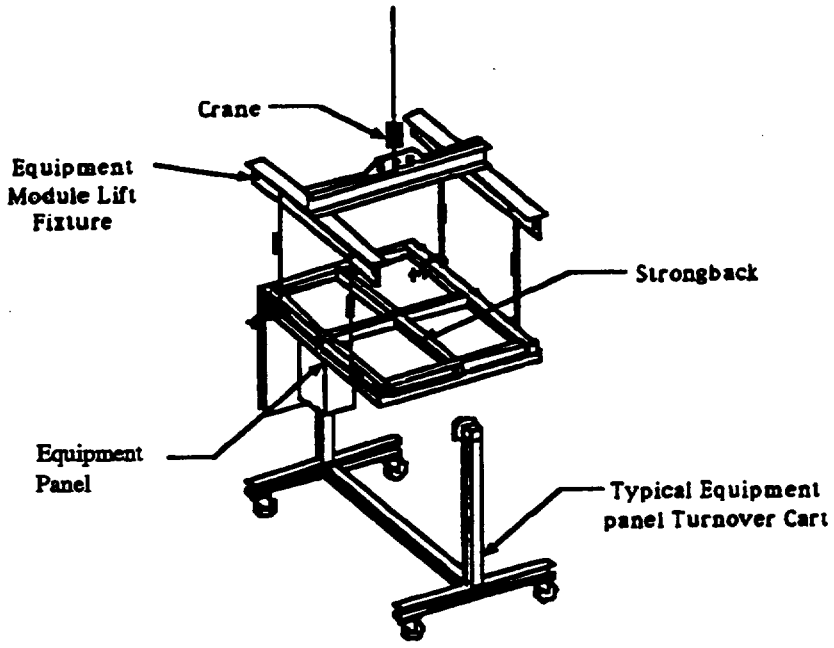

Figure 11. Lifting Panel from Turnover Cart

Figure 12 is the generic integration flow for the Base equipment panel and the EM while Figures 13, and 14 are the generic integration flows for the Front, and Top equipment panels. Variations to these flows for each EM are given in the following EM assembly paragraphs.

The Equipment Modules are designed to include kinematic type mounts which are used to attach the EMs securely to the Spacecraft Structure. The number of kinematic mounts differs between the EMs however, they all make use of a single three–axis mount, a two–axis mount and more than one one–axis mounts.

6.2.1 Communication/Command and Data Handling Equipment Module

Description

The COMM/C&DH Equipment Module consists of (+Z), (–Z), and (+Y) equipment panel assemblies, 2 closure panels ((+X), and (–X)), and an access panel (–Y).

The COMM/C&DH EM has no heat pipes. The (+Y) and (–Z) panels are radiators and have silver teflon tape and the possibility of patch blankets on the exterior surface. The (+X) and (–Y) panels have full and partial MLI blankets installed, respectively. The COMM/C&DH EM is designed to be located on the Zenith (–Z) face of the Spacecraft Bus. The (+Z) panel has aluminum–kapton tape on its interior side and is painted black on the exterior surface and is designed to include four (4) kinematic type mounts which are used to attach the COMM/C&DH EM securely to the Spacecraft Structure.

A

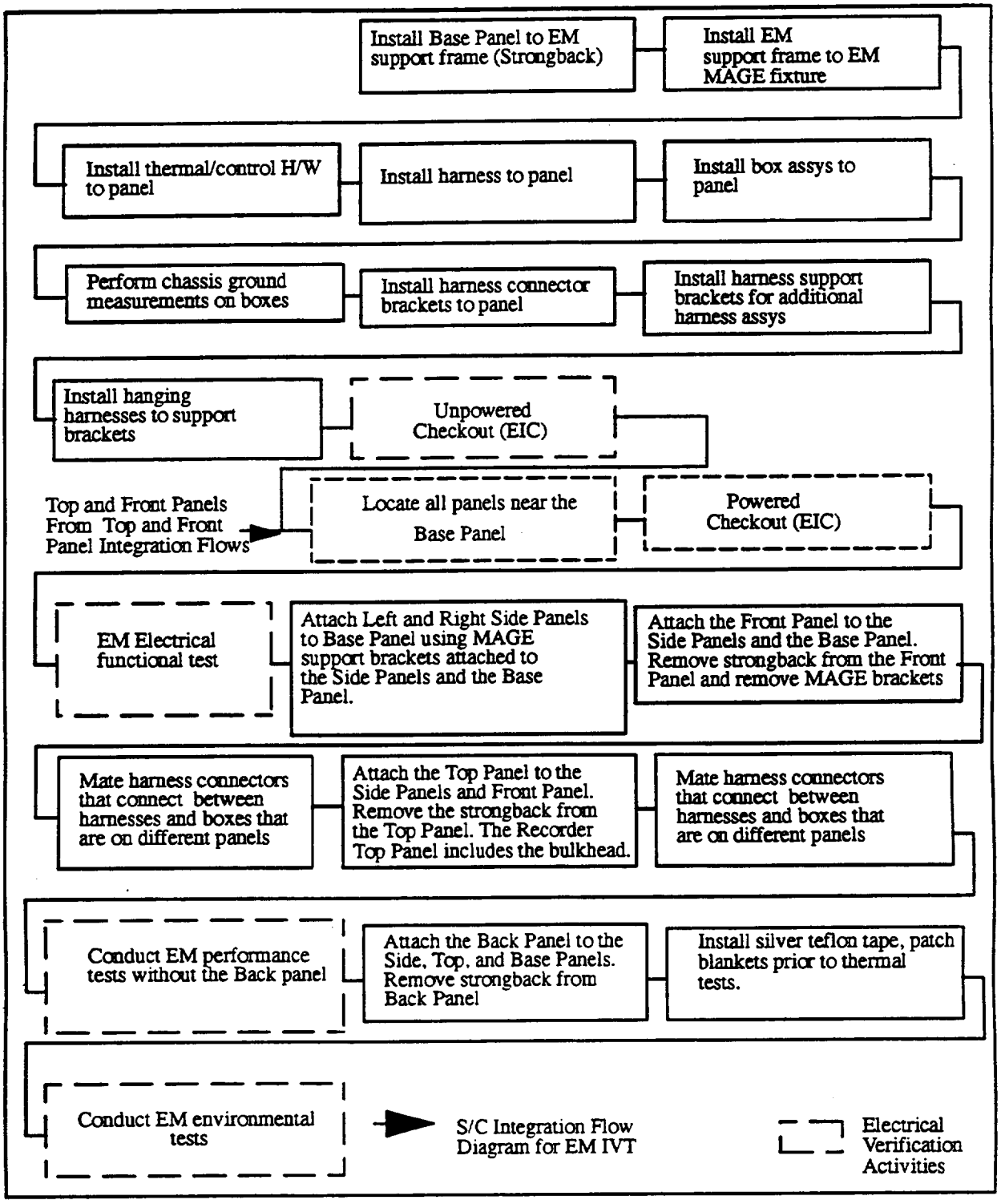

Figure 12. Base Panel and EM Integration Flow Diagram
(Not applicable to Power and Sensor EM)

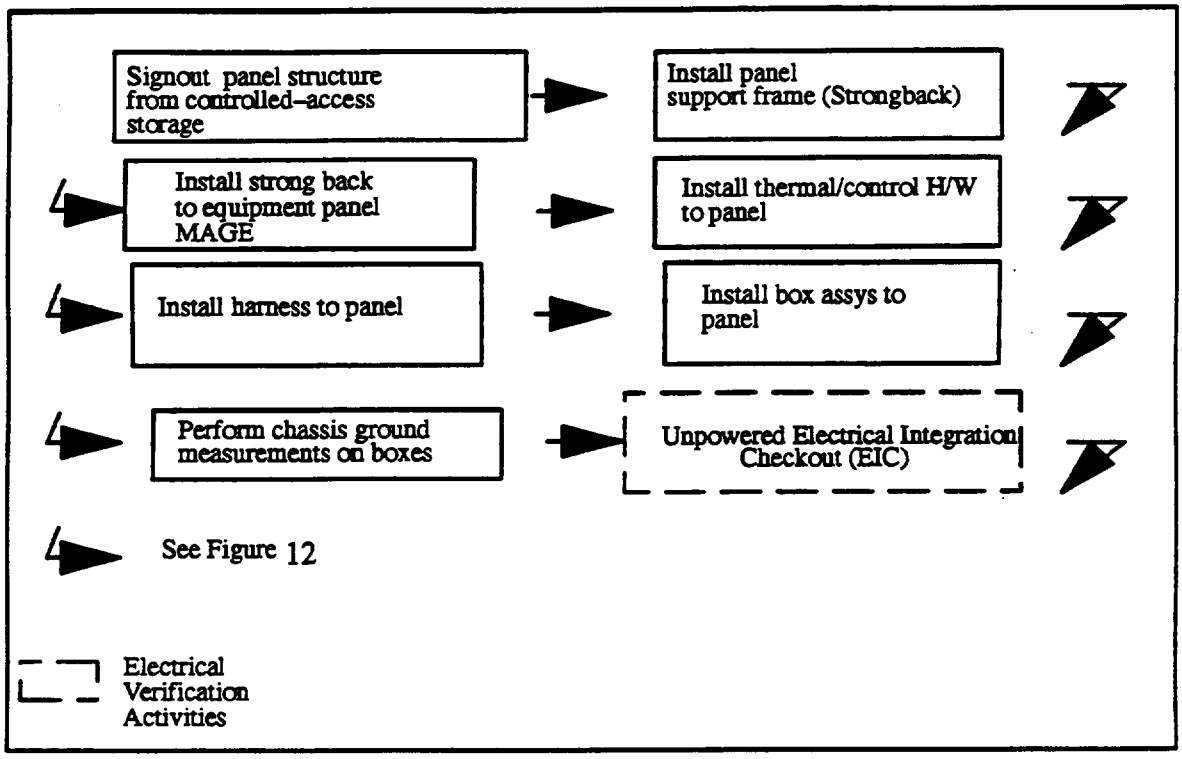

Figure 13. Front Panel Integration

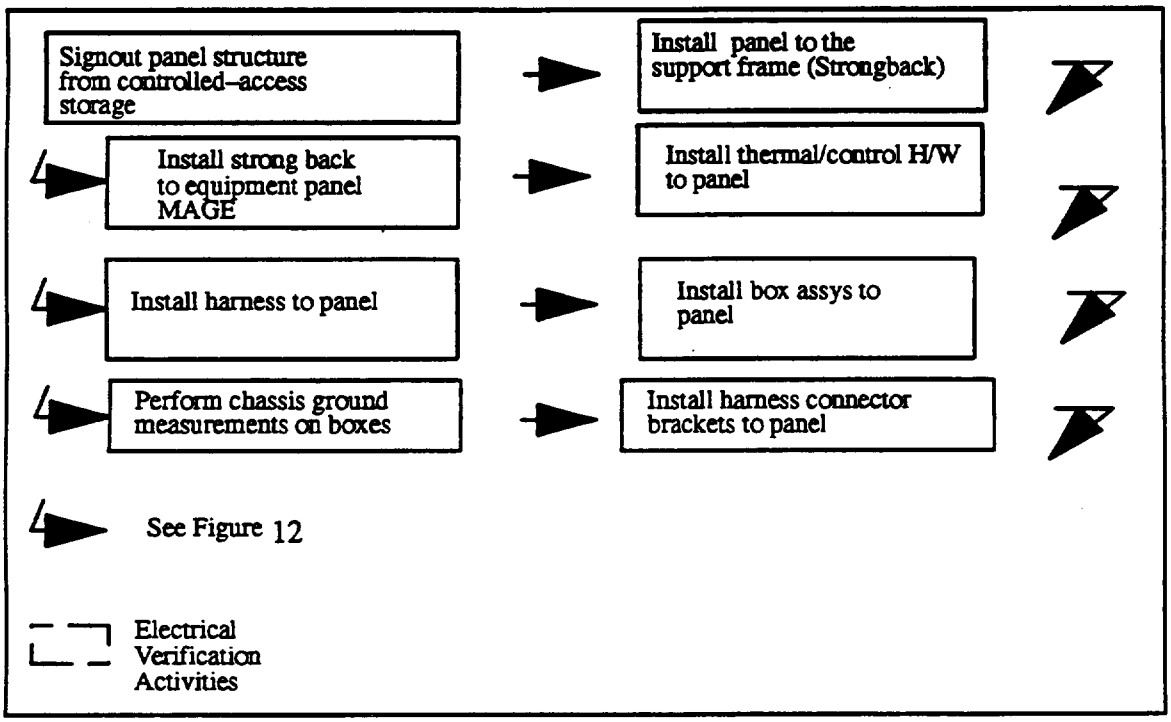

Figure 14. Top Panel Integration

Integration Details

The integration of the COMM/C&DH EM is illustrated in Tables I, II, and III; and described in Figure 7.

Table I. COMM/C&DH EM Integration Flow Support (TBD–1)

	Documentation	Equipment	Tooling/Fixtures	Facilities
Install panel to support frame (strongback)	IPR–COM–20008745	20008895G1, Panel;	20034968, Strongback	Bay 8
Install strong-back to EM turn–over cart	IPR–COM–20008745	(TBD–1)	200034967, EM Cart	Bay 8
Install thermal control H/W to panel	IPR–COM–20008745	(TBD–1)	(TBD–1)	Bay 8
Install harness to panel	IPR–COM–20008745	(TBD–1)	(TBD–1)	Bay 8
Install box assys to panel	IPR–COM–20008745	(TBD–1)	(TBD–1)	Bay 8
Perform chassis ground measure-ments on boxes	IPR–COM–20008745	(TBD–1)	(TBD–1)	Bay 8
Install harness connector brack-et(s) to panel	IPR–COM–20008745	(TBD–1)	(TBD–1)	Bay 8
Install harness support brackets for additional harness assys	IPR–COM–20008745	(TBD–1)	(TBD–1)	Bay 8
Install hanging harnesses to sup-port bracket	IPR–COM–20008745	(TBD–1)	(TBD–1)	Bay 8
Unpowered Elec-trical Integration and Checkout (EIC)	PN20008745	(TBD–1)	(TBD–1)	Bay 8
Co–locate all panels in the same area on an electrical bench next to the base panel.	IPR–COM–20008745	(TBD–1)	(TBD–1)	Bay 8

Table I. COMM/C&DH EM Integration Flow Support (TBD–1) (Continued)

	Documentation	Equipment	Tooling/Fixtures	Facilities
Harness connectors mated to flight boxes using breakout boxes.	IPR–COM–20008745	(TBD–1)	(TBD–1)	Bay 8
Conduct electrical functional tests	PN20008745	(TBD–1)	(TBD–1)	Bay 8
Remove breakout boxes and mate harness connectors to flight boxes.	IPR–COM–20008745	(TBD–1)	(TBD–1)	Bay 8
Attach side panels to base panel	IPR–COM–20008745	(TBD–1)	(TBD–1)	Bay 8
Attach Front panel	IPR–COM–20008745	(TBD–1)	(TBD–1)	Bay 8
Mate harness connectors between panels and panel boxes	IPR–COM–20008745	(TBD–1)	(TBD–1)	Bay 8
Attach Top panel	IPR–COM–20008745	(TBD–1)	(TBD–1)	Bay 8
Mate harness connectors between panels and panel boxes	IPR–COM–20008745	(TBD–1)	(TBD–1)	Bay 8
Conduct EM performance tests without the Back panel	PN20008745	(TBD–1)	(TBD–1)	Bay 8
Attach back panel	IPR–COM–20008745	(TBD–1)	(TBD–1)	Bay 8
Install silver–teflon tape and MLI prior to thermal testing	IPR–COM–20008745	(TBD–1)	(TBD–1)	Bay 8
Conduct EM environmental tests	PN20008745	(TBD–1)	(TBD–1)	

Table II. COMM/C&DH Front EP Integration Flow Support (TBD–2)

	Documentation	Equipment	Tooling/Fixtures	Facilities
(TBD–2)	(TBD–2)	(TBD–2)	(TBD–2)	(TBD–2)

Table III. COMM/C&DH Top EP Integration Flow Support (TBD–3)

	Documentation	Equipment	Tooling/Fixtures	Facilities
(TBD–3)	(TBD–3)	(TBD–3)	(TBD–3)	(TBD–3)

6.2.2 Power Equipment Module/Hex Bay Battery Module

Two Battery panels are associated with the Power Subsystem. One Battery EP is part of the PEM (+Y) and one Battery EP is located on and secured to the hex bay below the PEM (+Y).

The Power Equipment Module (PEM) consists of 3 EP assemblies ((–Z), (+Y), (+X)), a (–X) closure panel, an access panel (–Y), and 5 panels on the EM base (+Z). The base panels are designed to include six (6) kinematic type mounts which are used to attach the Power EM securely to the Spacecraft Structure. The hex bay Battery Module is designed to include six (6) kinematic type mounts which are used to attach it to the Spacecraft Structure

In the PEM the (–Z) and (+Y) panels are radiators with silver teflon tape and the possibility of patch blankets applied to the external surface. The (–Z) panel has heatpipes.

The (–X) and (–Y) panels have MLI on their external surfaces. The (–Y) panel has aluminum–kapton tape on its internal surface.

The (+Z) panels are black on their external surface and have aluminum–kapton tape on their internal surface.

The integration details concerning the Battery EM are illustrated in Figure 15, and Table IV.

The Power equipment module integration details are given in Figure 16 and Table V.

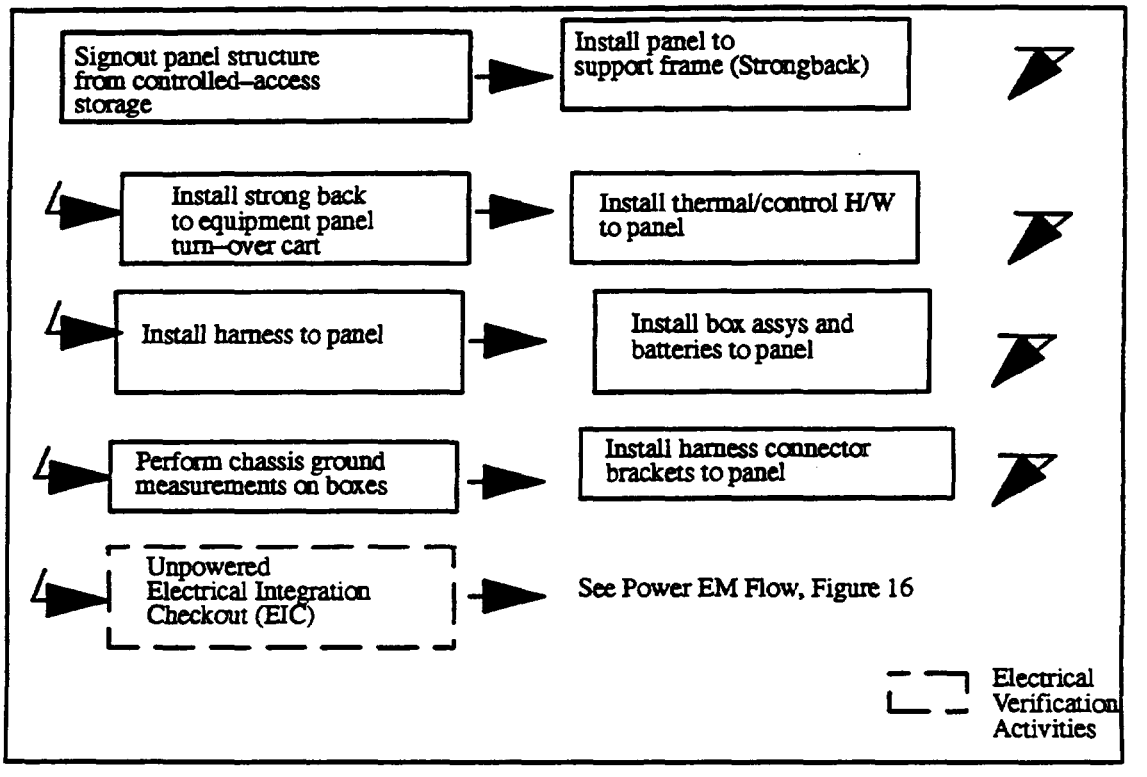

Figure 15. Battery Panel Assembly

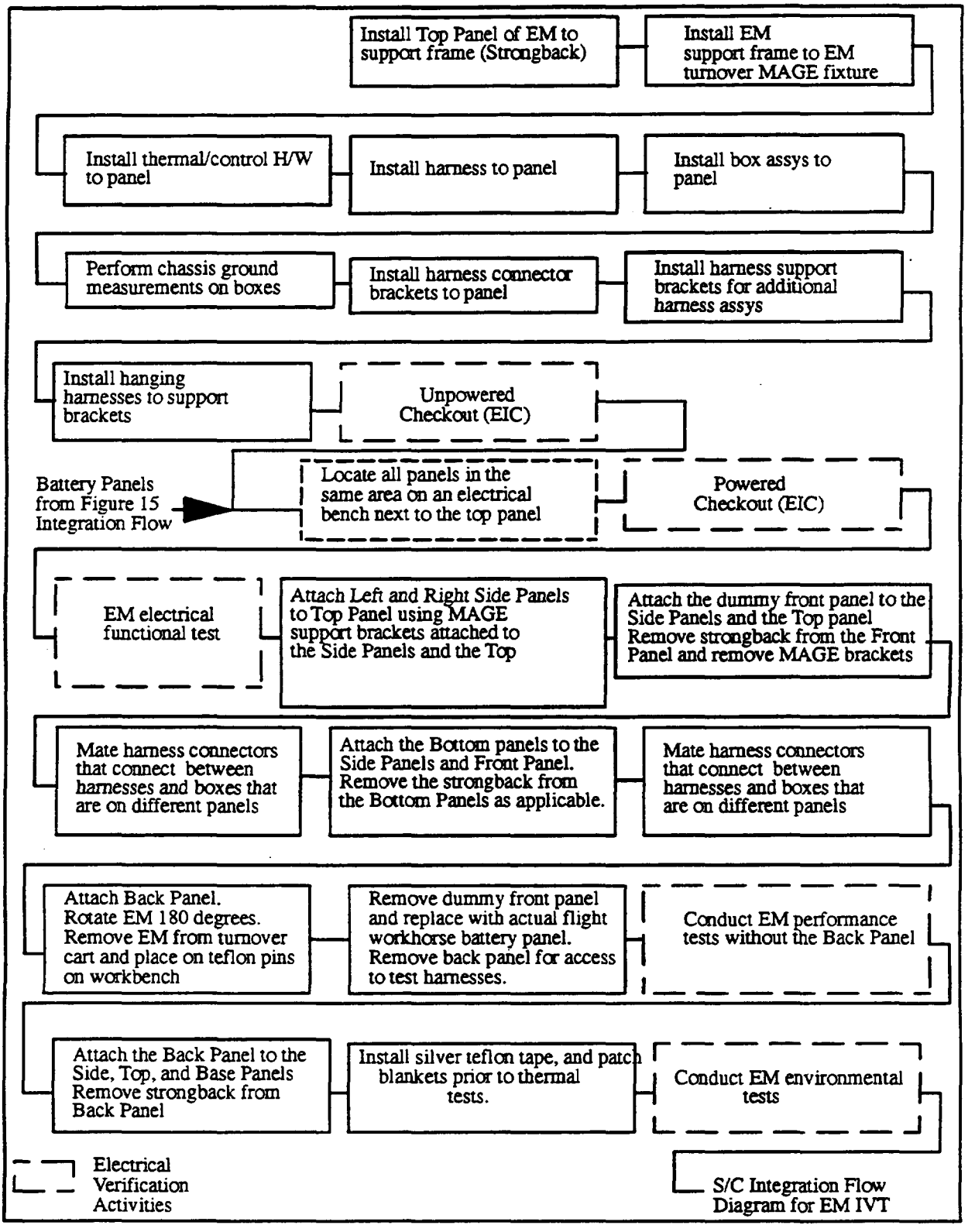

Figure 16. Base Panel and EM Integration Flow Diagram for Power EM

Table IV. Battery Panel Integration Flow Support (TBD–4)

	Documentation	Equipment	Tooling/Fixtures	Facilities
Sign–out Flight hardware from controlled–access storage	IPR–BATT–20001408	(TBD–4)	(TBD–4)	Bay 8
Install panel to support frame (strongback)	IPR–BATT–20001408	Panel, (TBD–4) 1– Axis Kinematic Mounts, 20001400 2–Axis Kinematic Mount, 20001400 3–Axis Kinematic Mount, 20001400	20034968, Strongback	Bay 8
Install strongback to equipment panel turn–over cart	IPR–BATT–20001408	(TBD–4)	20034969, EP Turn–over cart	Bay 8
Install thermal control H/W to panel	IPR–BATT–20001408	Temperature Sensors(TBD–4) Make–up Heaters, (TBD–4) Coatings, (TBD–4)	(TBD–4)	Bay 8
Install harness to panel	(TBD–4)	Power Harness, (TBD–4) C&DH Harness, (TBD–4)	(TBD–4)	Bay 8
Install box assys to panel	IPR–BATT–20001408	HCEs, (TBD–4) FDB, 20008694G1; BDU, 20008568; EPCs, 20008597G1; NH Cells, 20004950;	Electrical breakout boxes, (TBD–4)	Bay 8
Perform chassis ground measurements on boxes	IPR–BATT–20001408	(TBD–4)	(TBD–4)	Bay 8

Table IV. Battery Panel Integration Flow Support (TBD–4) (Continued)

	Documentation	Equipment	Tooling/Fixtures	Facilities
Install harness connector bracket(s) to panel	IPR–BATT–20001408	(TBD–4)	(TBD–4)	Bay 8
Unpowered Electrical Integration and Checkout (EIC)	PN20001408 TP–EIC–20008571	(TBD–4)	(TBD–4)	Bay 8
Powered Electrical Integration and Checkout (EIC) with Power Module	PN20001408 TP–EIC–20008571	(TBD–4)	(TBD–4)	Bay 8
Remove strongback and Battery Panel from turnover cart	IPR–BATT–20001408	(TBD–4)	20038089, EM Lift Fixture	Bay 8

Table V. Power Equipment Module Integration Flow Support (TBD–5)

	Documentation	Equipment	Tooling/Fixtures	Facilities
(TBD–5)	(TBD–5)	(TBD–5)	(TBD–5)	(TBD–5)

6.2.3 Recorder Equipment Module (Rec EM)

The Recorder EM is located on the Zenith face of the Spacecraft and is attached to the Primary Structure using kinematic mounts located in the (+Z) base panel. The Rec EM includes two Equipment Panel (EP) assemblies, (+Y) and (–Z) that are radiators with internal heat pipes as well as having silver–teflon (and patch blankets as required) installed on their exterior surface. There are two closure panels, (+X) and (–X). The (+X) panel has MLI covering part of its exterior surface. A bulkhead panel is included in the design to provide structural stiffness. The bulkhead panel attaches to both the +Z and –Z panels and is located midway between the EM +X and –X panels. The (+Z) panel is black on the Spacecraft side of the panel and has aluminum–kapton tape on the inside surface. An access panel (–Y) with MLI on the exterior surface and aluminum–kapton tape on the interior surface completes the design of the EM.

The base panel is designed to include five kinematic type mounts which are used to attach the Recorder EM securely to the Spacecraft Structure.

The integration details concerning the Rec EM are illustrated in Figure 7, and Tables VI through VIII.

Table VI. Rec EM and Base EP Integration Flow Support (TBD–6)

	Documentation	Equipment	Tooling/Fixtures	Facilities
(TBD–6)	(TBD–6)	(TBD–6)	(TBD–6)	(TBD–6)

Table VII. Rec Front EP Integration Flow Support (TBD–7)

	Documentation	Equipment	Tooling/Fixtures	Facilities
(TBD–7)	(TBD–7)	(TBD–7)	(TBD–7)	(TBD–7)

Table VIII. Rec Top EP Integration Flow Support (TBD–8)

	Documentation	Equipment	Tooling/Fixtures	Facilities
(TBD–8)	(TBD–8)	(TBD–8)	(TBD–8)	(TBD–8)

6.2.4 Direct Access (DAS) Equipment Panel

The DAS equipment panel consists of a single equipment support panel (+Y). This equipment panel is designed with internal heat pipes and silver teflon tape on its exterior surface.

The DAS EP is located on the +Y side of the EOS–AM Spacecraft Bus. The panel is designed to include six (6) kinematic type mounts which are used to attach the DAS EP to the Spacecraft Bus primary structure.

The integration details concerning the DAS EP are illustrated in Table IX and Figure 17.

Table IX. DAS Panel Integration Flow Support (TBD–9)

	Documentation	Equipment	Tooling/Fixtures	Facilities
Sign–out Flight hardware from controlled–access storage	IPR–DAS–20008571	(TBD–9)	(TBD–9)	(TBD–9)
Install panel to support frame (strongback)	IPR–DAS–20008571	Panel, 20008910G1, 1– Axis Kinematic Mounts, 20001400 2–Axis Kinematic Mount, 20001400 3–Axis Kinematic Mount, 20001400	20034968, Strongback	Bay 8
Install strongback to equipment panel turn–over cart	IPR–DAS–20008571	(TBD–9)	20034969, EP Turn–over cart	Bay 8

Table IX. DAS Panel Integration Flow Support (TBD–9) (Continued)

	Documentation	Equipment	Tooling/Fixtures	Facilities
Install thermal control H/W to panel	IPR–DAS–20008571	Temperature Sensor (TBD–9) Make–up Heater, (TBD–9) Coatings, (TBD–9)	(TBD–9)	Bay 8
Install harness to panel	IPR–DAS–20008571	Power Harness, (TBD–9) C&DH Harness, (TBD–9) X–Band/WG Cabling, (TBD–9)	(TBD–9)	Bay 8
Install box assys to panel	IPR–DAS–20008571	HCEs, (TBD–9) FDB, 20008694G1 BDU, 20008568 EPCs, 20008597G1 Upconverter Freq Source, (TBD–9) Transmitter, (TBD–9) Modulator, (TBD–9) Wave Guide Switch, (TBD–9) DAS Filter Assy	Electrical break-out boxes, (TBD–9)	Bay 8
Perform chassis ground measure-ments on boxes	IPR–DAS–20008571	(TBD–9)	(TBD–9)	Bay 8
Install harness connector brack-et(s) to panel	IPR–DAS–20008571	(TBD–9)	(TBD–9)	Bay 8
Unpowered Elec-trical Integration and Checkout (EIC)	PN20008571	(TBD–9)	(TBD–9)	Bay 8

Table IX. DAS Panel Integration Flow Support (TBD–9) (Continued)

	Documentation	Equipment	Tooling/Fixtures	Facilities
Powered Electrical Integration and Checkout (EIC), Functional Tests, Performance Tests	PN20008571	(TBD–9)	(TBD–9)	Bay 8
Install silver teflon tape.	IPR–DAS–20008571	(TBD–9)	(TBD–9)	Bay 8
Environmental Tests	PN20005871	(TBD–9)	(TBD–9)	
Remove strongback and panel from turn–over cart	IPR–DAS–20008571	(TBD–9)	(TBD–9)	Bay 8

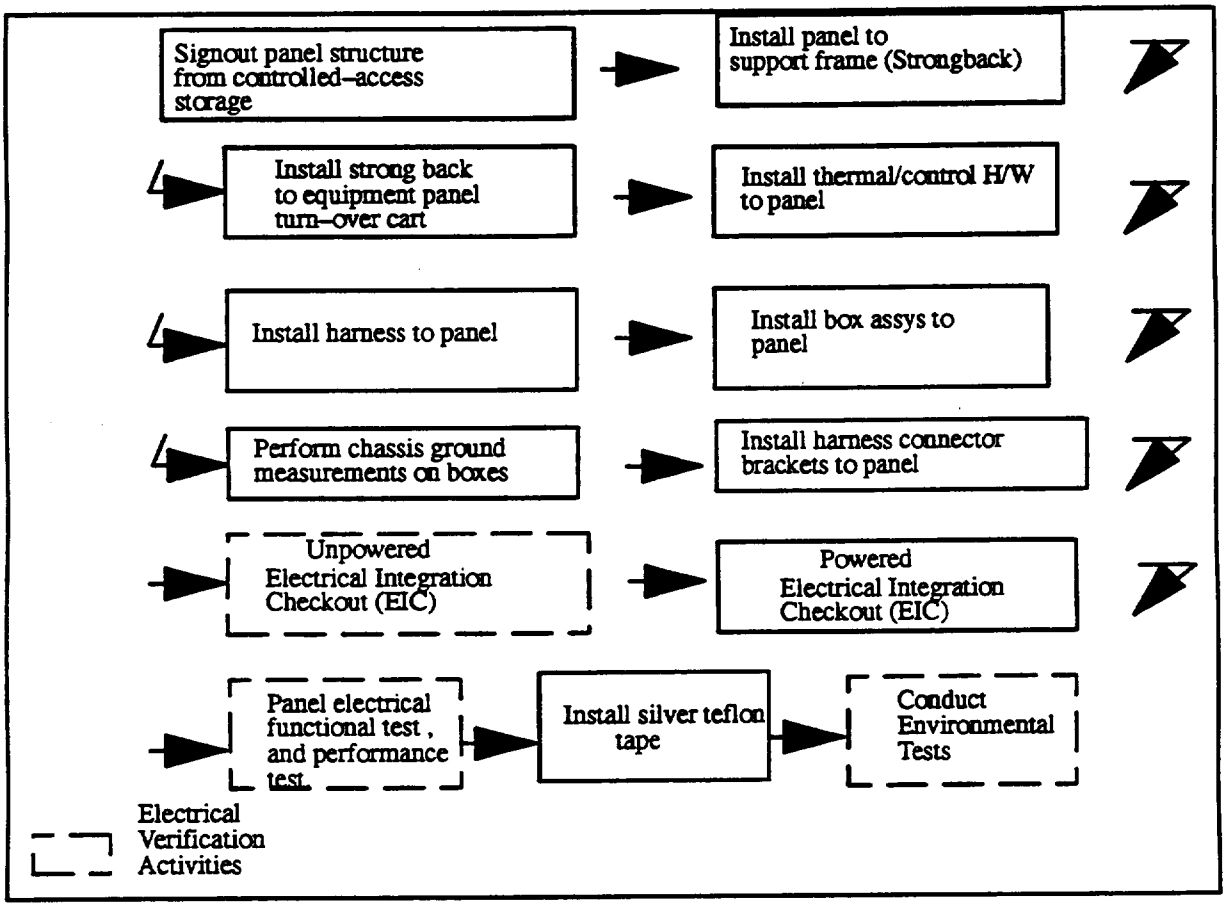

Figure 17. DAS Equipment Panel Integration

6.2.5 Guidance, Navigation and Control Sensor Equipment Module

The GN&C Sensor Equipment Module consists of 3 EP assemblies, ((+Z), (–Z), and (+Y)), 2 closure panels ((+X), and (–X)), and an access panel (–Y). The (+Z) panel acts as an optical bench for the GN&C Sensor EM.

The panel is designed to include six (6) kinematic type mounts which are used to attach the optical bench (+Z panel) to the Spacecraft Bus primary structure and six (6) kinematic mounts (placed piggyback to the other kinematic mounts) which attach the rest of the Sensor EM structure to the optical bench.

The (–Z) and (+Y) panels are the radiators for the EM and have silver teflon tape and the possibility of patch blankets on their exterior surfaces. The (–Y) panel has MLI on its exterior surface and aluminum–kapton tape on its interior surface. The (+Z) panel is black on the exterior side of the panel and has aluminum–kapton tape on the interior surface.

The integration details concerning the GN&C Sensor EM are illustrated in Tables X, XI, XII and Figure 18.

6.2.6 RWA Equipment Module

One RWA equipment module is required for use in the EOS GN&C S/S. The RWA equipment module consists of equipment panels ((+Y), (+Z), (–X)), 2 closure panels ((–X), (–Z)), and an access panel (–Y). The RWA EM is used in conjunction with the GN&C Sensor EM as part of the EOS GN&C S/S. The RWA EM is located on the –Y face of the Spacecraft, below the SAA, in the –X direction from the SAD.

The base panel is designed to include four (4) kinematic type mounts which are used to attach the RWA EM securely to the Spacecraft Structure.

On this EM the (+Z), (–Y) and (–X) panels are radiators. As such they have silver–teflon tape and the possibility of patch blankets on their exterior surface. The (+X), (+Y), and (–Z) panels have MLI on their exterior surface.

Table X. Sensor EM and Optical Bench Base EP Integration Flow Support (TBD–10)

	Documentation	Equipment	Tooling/Fixtures	Facilities
(TBD–10)	(TBD–10)	(TBD–10)	(TBD–10)	(TBD–10)

Table XI. Sensor Front EP Integration Flow Support (TBD–11)

	Documentation	Equipment	Tooling/Fixtures	Facilities
(TBD–11)	(TBD–11)	(TBD–11)	(TBD–11)	(TBD–11)

Table XII. Sensor Optical Bench (Base) EP Integration Flow Support (TBD–12)

	Documentation	Equipment	Tooling/Fixtures	Facilities
(TBD–12)	(TBD–12)	(TBD–12)	(TBD–12)	(TBD–12)

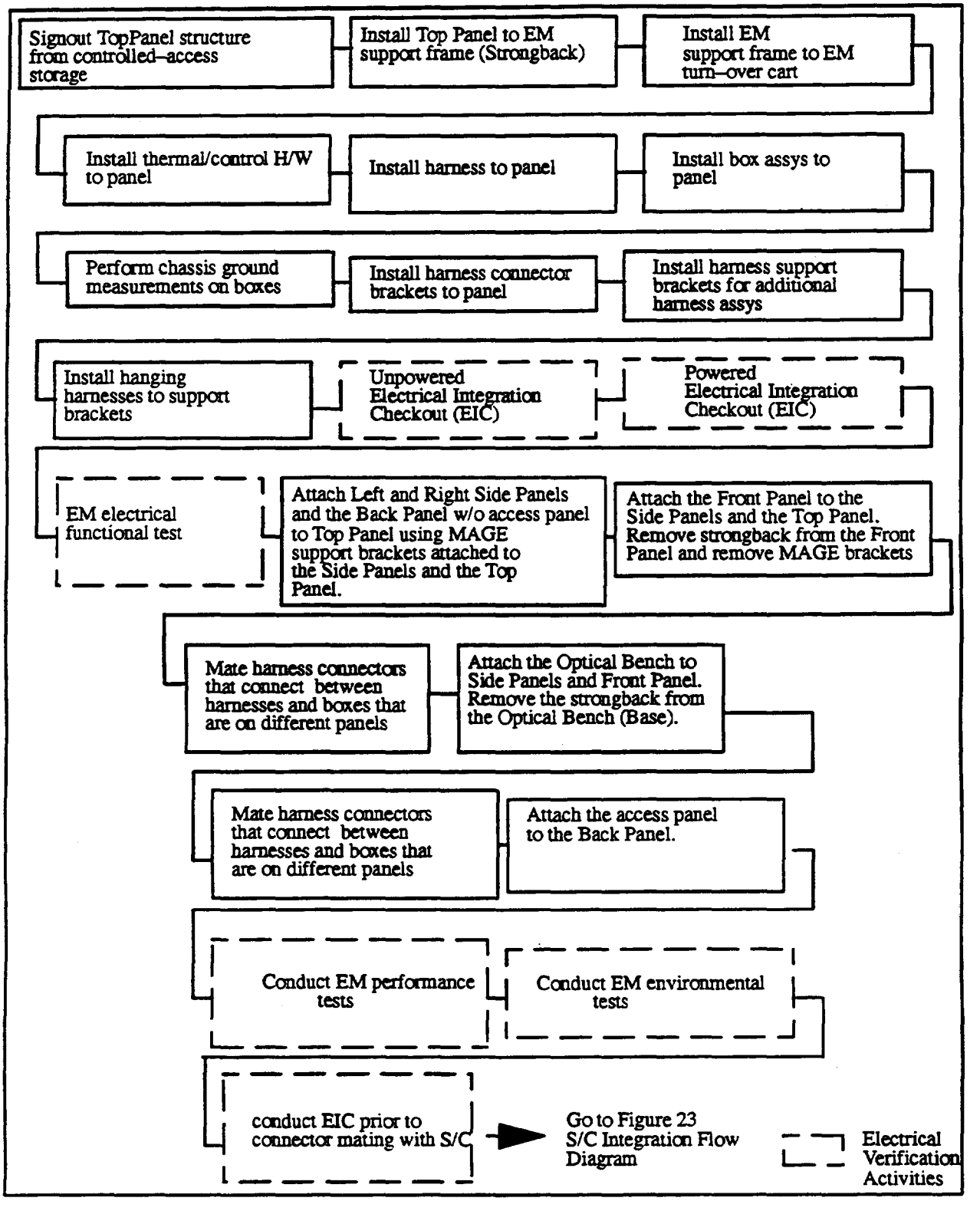

Figure 18. Sensor EM/Base Panel Integration

The integration details concerning the RWA EM are illustrated in Figure 7, and Tables XIII, XIV, and XV.

Table XIII. RWA EM and Base EP Integration Flow Support (TBD–13)

	Documentation	Equipment	Tooling/Fixtures	Facilities
(TBD–13)	(TBD–13)	(TBD–13)	(TBD–13)	(TBD–13)

Table XIV. RWA Front EP Integration Flow Support (TBD–14)

	Documentation	Equipment	Tooling/Fixtures	Facilities
(TBD–14)	(TBD–14)	(TBD–14)	(TBD–14)	(TBD–14)

Table XV. RWA Top EP Integration Flow Support (TBD–15)

	Documentation	Equipment	Tooling/Fixtures	Facilities
(TBD–15)	(TBD–15)	(TBD–15)	(TBD–15)	(TBD–15)

6.3 Solar Array Assembly

The Solar Array Assembly is supplied to I&T completely assembled and tested by the subcontractor. The assembly consists of a single flexible blanket housed in a blanket box and a continuous longeron astromast used to extend and provide tension to the blanket when in orbit. The hardware needed to retain the blanket box to the Spacecraft during launch by connecting the blanket box to the Spacecraft primary structure node fittings is provided with the blanket box.

The Sequential Shunt Unit which is mounted on the Solar Array mast cannister for flight, will not be on the Solar Array when it is delivered to I&T.

The SSU is used for all electrical testing of the Spacecraft even when the Solar Array is removed from the Spacecraft. For example, after the Solar Array is removed after its fit check with the Spacecraft the SSU remains electrically integrated to the Spacecraft. Final installation of the Solar Array is done just prior to the acoustic environmental test. Integration of the Solar Array Assembly by I&T is performed at the Spacecraft level as described in Spacecraft Integration, Section 7.

6.4 High Gain Antenna (HGA) Assembly

The HGA is a major assembly qualified and delivered by the subcontractor fully assembled. The HGA Assembly consists of the following major components; the HGA Assembly Reflector, the Gimbal Drive and Cable Wrap Assembly, the Gimbal Drive Electronics, the Ku–band RF Electronics, and the Thermal Control Equipment. The HGA Assembly and the mating boom and hinge assemblies are integrated with the EOS Spacecraft as described in the Spacecraft Integration, Section 7.

6.5 Propulsion Module Assembly (PM)

The propulsion module flight structure assembly is delivered to I&T complete with harness, flight tank, valves, thrusters, line heaters and associated piping and the MAGE turnover fixture. The propulsion subsystem acceptance test is also completed prior to delivery to I&T.

The assembly of the propulsion module begins with the installation of thermal control hardware (heaters, thermostats, temperature sensors, etc.) to the propulsion module base panel. The electronic component boxes and any additional harnesses are mechanically installed next. These components are installed with thermally conductive adhesive at their interface where required. A component–to–panel ground measurement is taken for each component. The propulsion module harnesses are routed and secured into position using the harness mockup as a guide. Harness connectors are mated to the electronic components as part of the electrical integration procedure. Thermal coatings and MLI will be installed onto the propulsion module prior to propulsion module environmental tests.

Figure 19 provides two views showing the various electronic boxes and their locations on the propulsion module. Figure 20 shows the assembled propulsion module still in the turnover fixture. A flow diagram of the PM assembly activities by I&T is given in Figure 21. The integration details concerning the Propulsion Module are provided in Table XVI.

Note: The full–up PM will be assembled to the Spacecraft Structure during the Spacecraft assembly process. The specific details of this assembly activity are in Section 7.1.

Table XVI. Propulsion Module Integration Flow Support (TBD–16)

	Documentation	Equipment	Tooling/Fixtures	Facilities
(TBD–16)	(TBD–16)	(TBD–16)	(TBD–16)	(TBD–16)

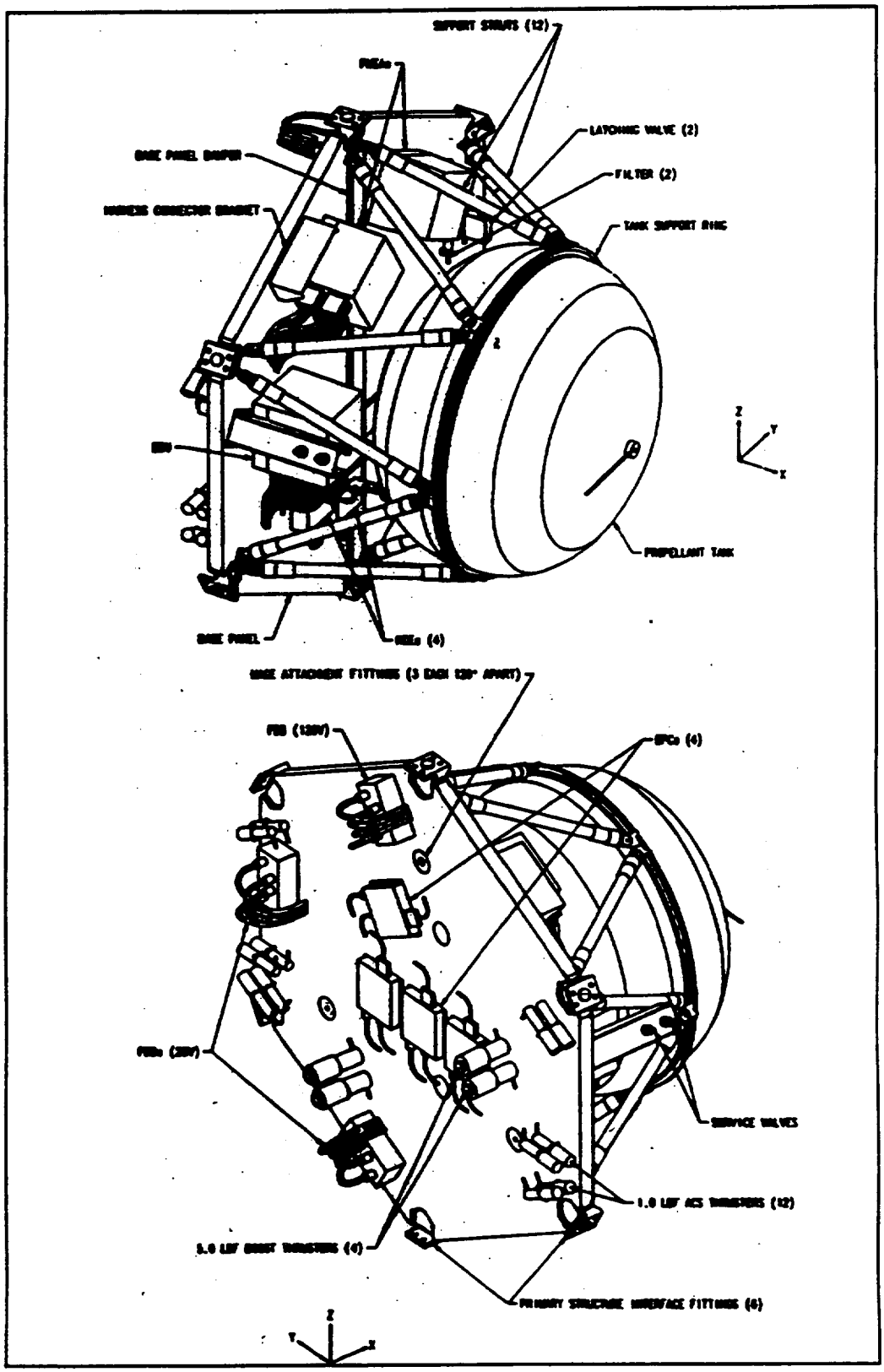

Figure 19. Propulsion Module Assembly

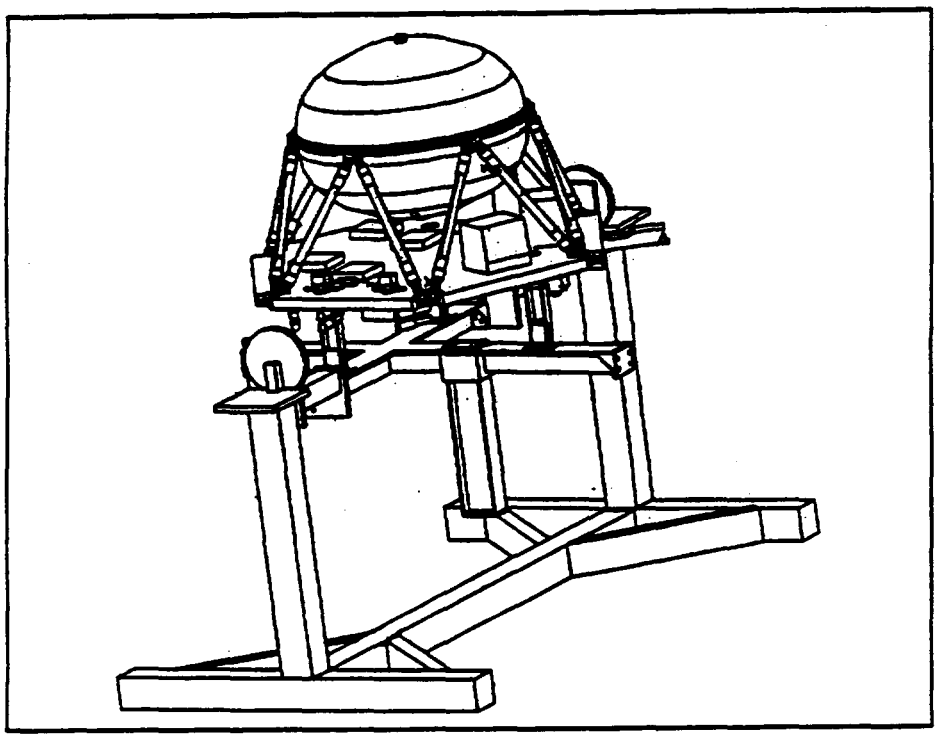

Figure 20. Propulsion Module Assembly in Turnover Fixture

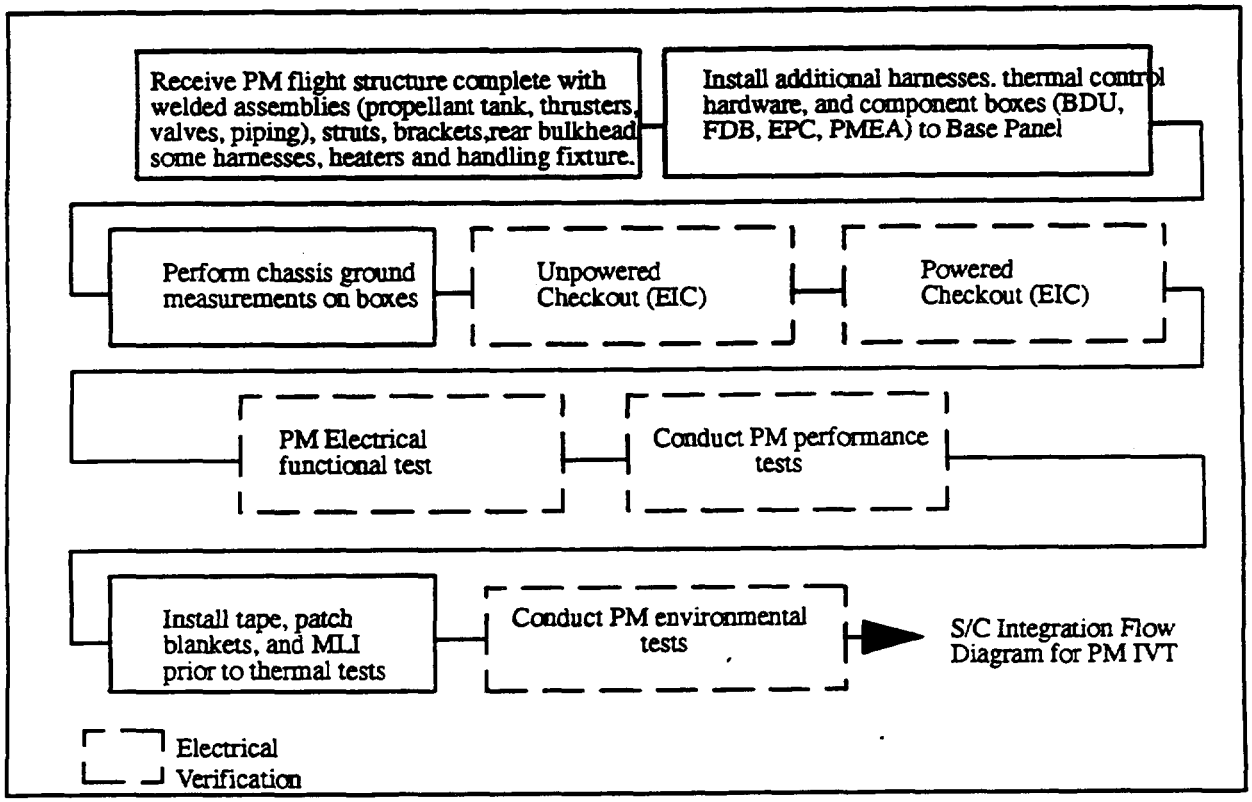

Figure 21. Propulsion Module Assembly Flow

7 SPACECRAFT ASSEMBLY INTEGRATION PROCESS

This section describes the integration activities to be performed by I&T during the Spacecraft assembly and test phases of the EOS–AM Program. These activities include the installation and electrical integration of all flight hardware with the spacecraft structure assembly. A layout drawing of the EOS–AM Spacecraft is shown in Figure 22. The assembly of the Spacecraft takes place in the Astro Space Bay 8 facility in East Windsor, N.J. which is maintained at a cleanliness level of Class 10,000. Integration of the Spacecraft begins with the delivery of the spacecraft structure assembly to I&T. The assembly of the Spacecraft is a multi–phased activity where groups of related hardware are integrated with the spacecraft structure assembly. This hardware consists mainly of the Electrical Accommodation Subsystem (harnesses), propulsion module, solar array, HGA deployment subsystem, equipment modules, thermal control subsystem, and structure mounted components. The Spacecraft integration flow is shown in Figure 23.

The first group of components to be integrated with the spacecraft structure is associated with the Electrical Accommodation Subsystem (EAS). Following the assembly of the EAS hardware on the spacecraft structure, the qualified Propulsion Module is integrated. The equipment modules is integrated to the Spacecraft next. As each equipment module is installed any related structure mounted components is also installed to simplify the electrical integration of each subsystem. This is depicted in the Spacecraft integration flow. Installation and checkout of the CPHTS assemblies is performed next. The HGA and deployment assembly and the solar array are installed for a fit check to verify all mechanical interfaces and then are removed. Final installation of these assemblies is accomplished during the Spacecraft test flow just prior to the Spacecraft acoustics test. At this point the instruments are installed. This completes the assembly activities associated with the Spacecraft integration flow.

There are several mechanical assembly activities which take place as part of the Spacecraft test flow shown in Figure 24. The first activity is the installation of MLI (thermal blankets) and other flight thermal control hardware prior to the Spacecraft thermal vacuum test. The Spacecraft is thoroughly cleaned per a process defined by contamination control engineering in the Contamination Control Plan for the EOS–AM Spacecraft, PN20001412. The HGA and solar array assembly is installed prior to the spacecraft acoustic test. The next mechanical assembly activity during the test flow is the installation of flight batteries prior to the last Spacecraft comprehensive performance test and the shipment of the Spacecraft. The Spacecraft is thoroughly cleaned again, as described above, prior to its preparation for shipment. Figure 1, in section 3, shows the integration schedule for the EOS–AM Spacecraft.

7.1 Spacecraft Structure Assembly Handling

The spacecraft structure assembly is delivered to I&T after it has completed verification testing (i.e, modal and static load tests). The structure is installed in the mobile environmental test stand (METS) when it is delivered to the I&T bay. Once in the I&T Bay, the core structure assembly is transferred to the three axis positioner (TAP) using the horizontal lift sling and refurbished in preparation for the integration process. The TAP is the Spacecraft integration fixture which "rolls" the Spacecraft structure ±180 degrees along its horizontal axis ("X") for installation or access to

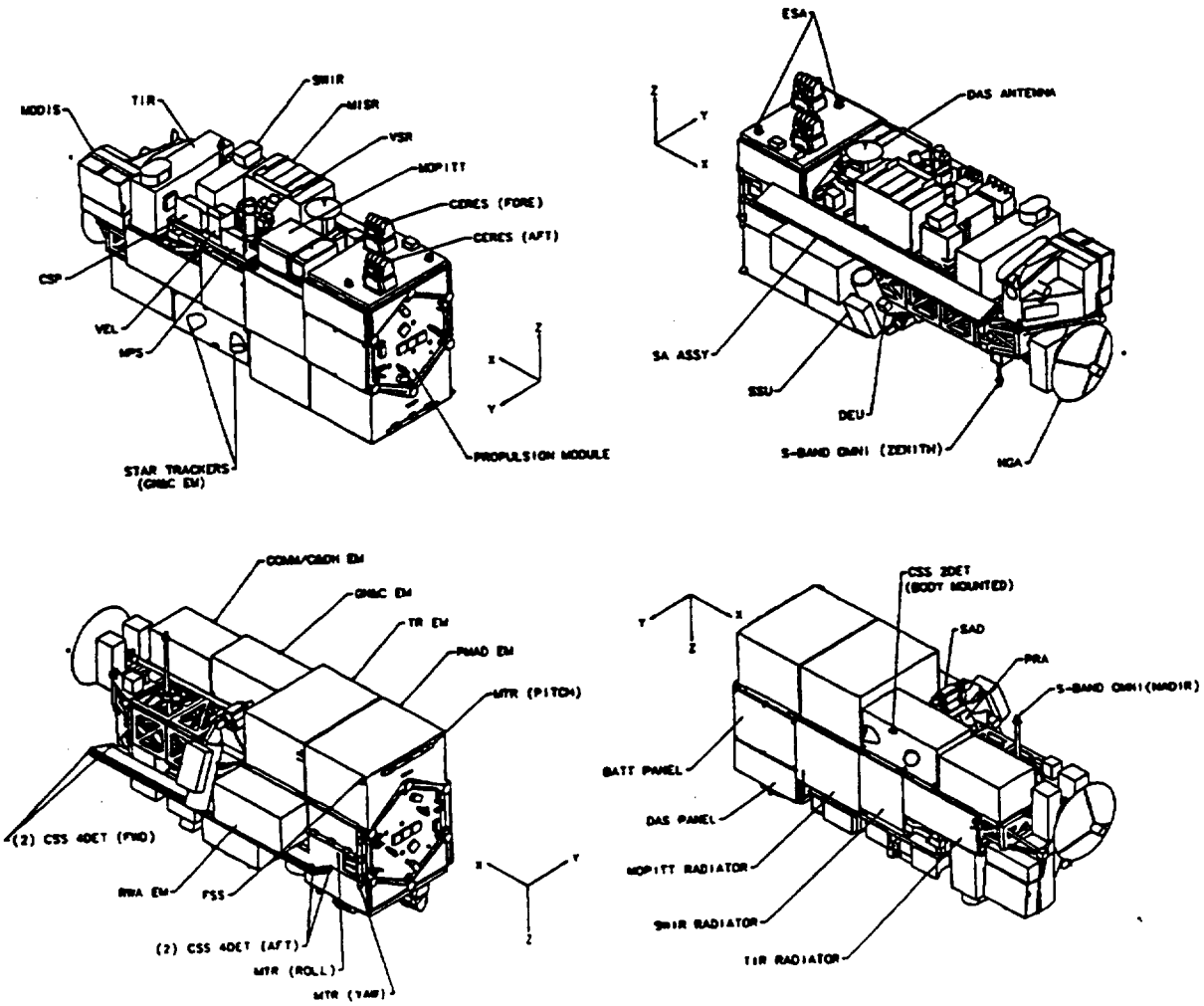

Figure 22. EOS–AM Spacecraft Configuration

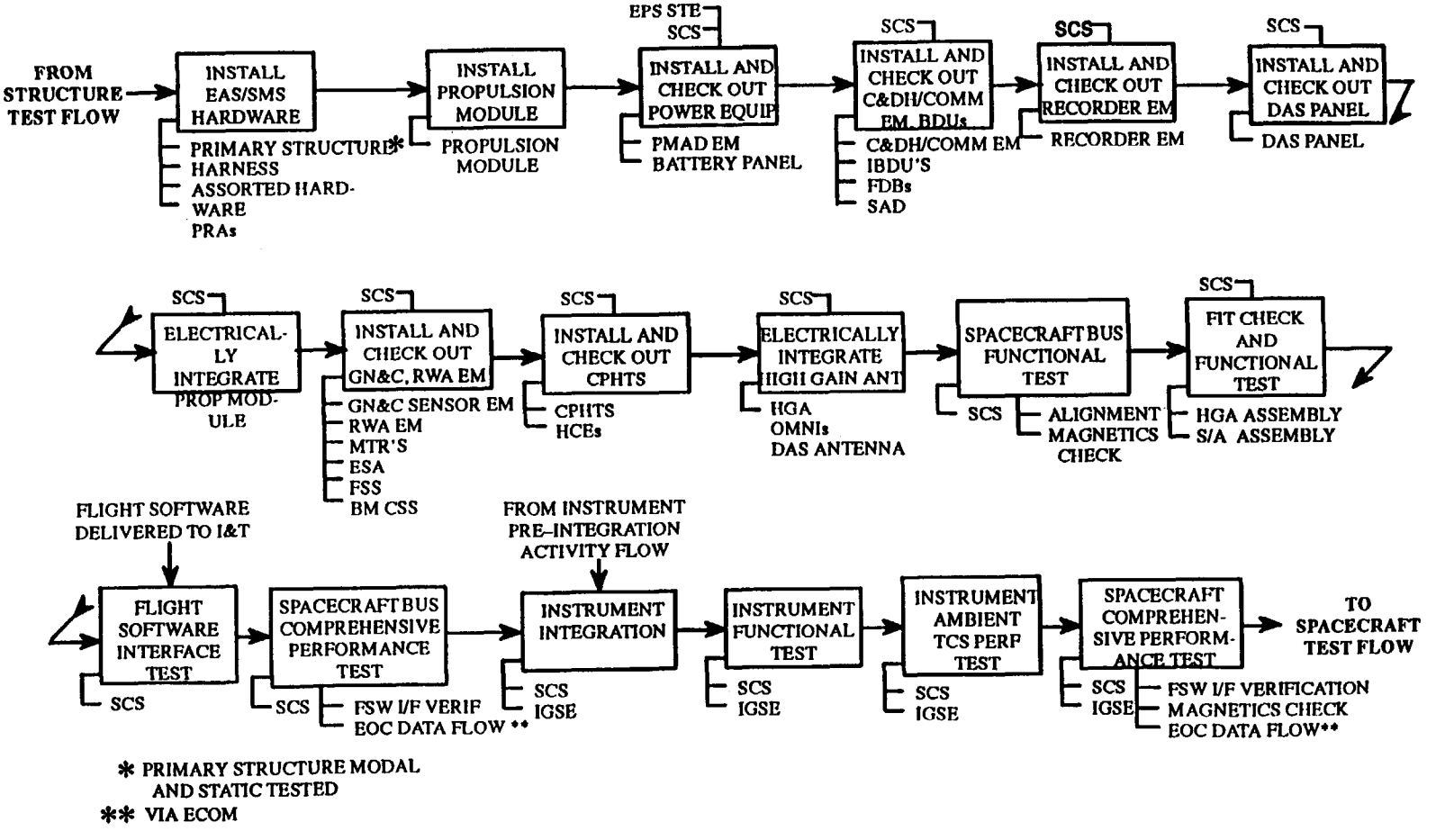

Figure 23. Spacecraft Integration Flow

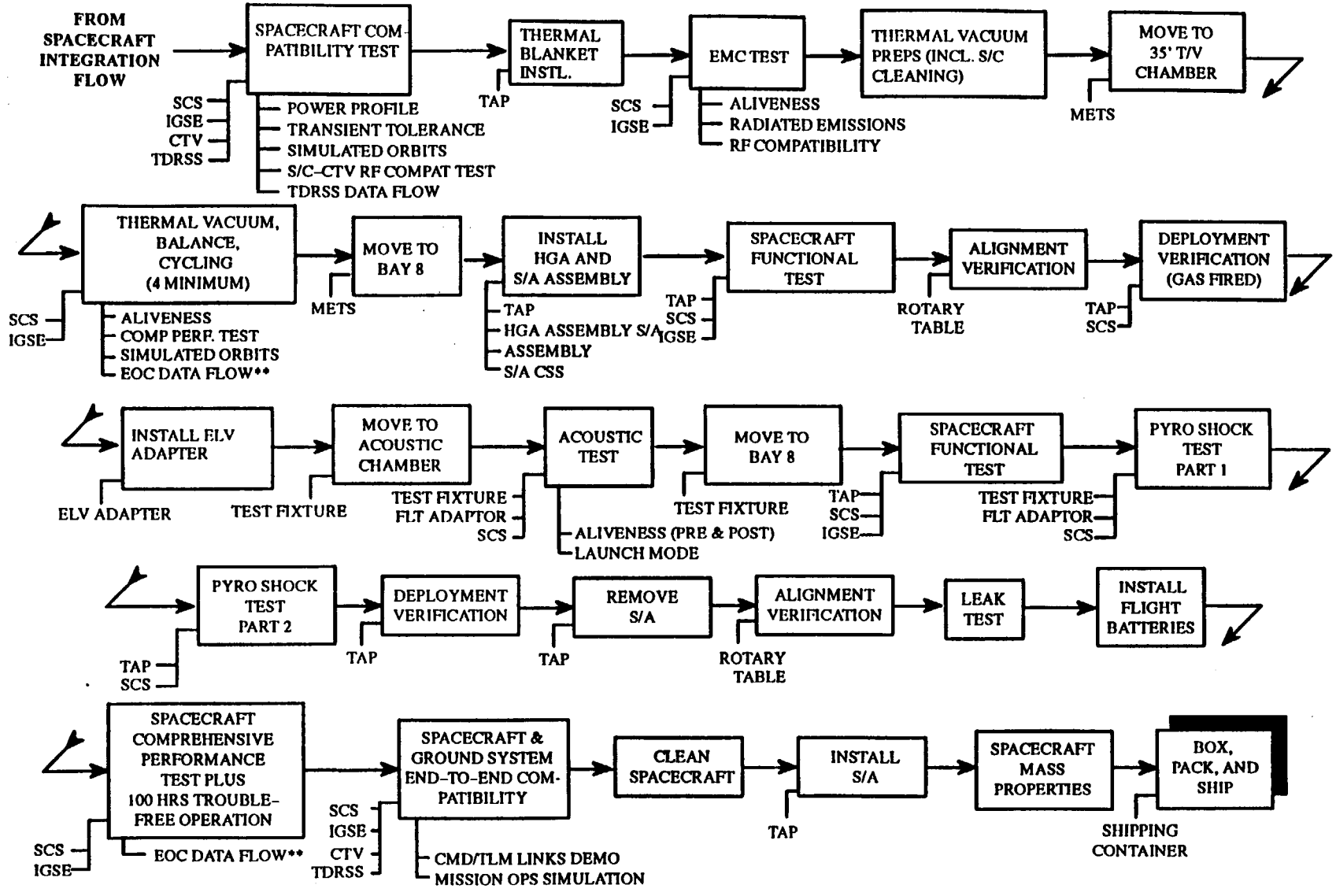

** VIA ECOM

Figure 24. Spacecraft Test Flow

equipment modules, instruments, connectors, etc. It also rotates the Spacecraft about its "Y" or "Z" axis 0 through 90 degrees bringing the Spacecraft "X" axis from horizontal to vertical. The TAP is shown in Figure 25.

7.2 Electrical Accommodations Subsystem Installation

The integration of the Spacecraft begins with the installation of the EAS components which consists mainly of the electrical harnesses. The electrical harnesses installed on the structure include the electrical power harnesses, C&DH harnesses, high rate data links, RF cables, and pyrotechnic harnesses. The harnesses are pre–formed with all connectors terminated prior to being installed. All connector brackets and other miscellaneous harness support equipment are also installed at this time. The full size harness mockup is used to show the detailed harness routing and tie–down requirements for the installation. The connector brackets and harness support brackets are grounded as required per grounding procedure (TBD–17). The TAP is rotated as necessary for the installation of the EAS components.

7.3 Propulsion Module Installation

The mechanical integration of the Spacecraft continues with the installation of the propulsion module into the aft end of the hex bay of the structure assembly. The propulsion module is positioned on its turn–over fixture with the –Z axis up. The Spacecraft structure is rotated to the –Z up orientation in the TAP and lifted using the horizontal lift sling. The Spacecraft is installed onto the METS fixture to allow access for propulsion module installation from the –X direction. Figure 26 shows this installation process. The propulsion module is lifted from its turn–over fixture with a counterweighted strongback assembly and sling. The module is then inserted into the spacecraft structure's Bay 1 using the overhead crane. The rear bulkhead of the module is bolted to the spacecraft aft hex bulkhead. The Spacecraft is lifted from the METS and replaced on the TAP using the Spacecraft horizontal lift sling. Electrical integration of the propulsion module occurs after the integration of the DAS panel equipment module (described in section 5.7 and shown in Figure 23). The electrical integration is performed per the Propulsion Module test plan which includes the mating of Spacecraft harnesses to the module.

7.4 Installation of the Power Subsystem Equipment

The Spacecraft is positioned in the –Z up orientation in the TAP for the Power EM installation. The six kinematic mounts for the equipment module are installed on the Spacecraft node fittings and the upper kinematic mount bearings are installed in the base of the equipment module. The equipment module is lifted from its assembly fixture with its –Z panel up using the equipment module lift sling. The module is then lowered onto its kinematic mounts on the Spacecraft and secured. When the Power EM installation is completed, the Spacecraft is rotated in the TAP to the +Y up orientation for the battery panel installation. The battery panel is installed onto its Spacecraft kinematic mounts using the same process as the Power EM above. Electrical integration of the Power and battery panel EMs is performed per the Power EM and battery panel test plans. The Spacecraft harnesses are mated to the EM and panel as part of the electrical integration procedure.

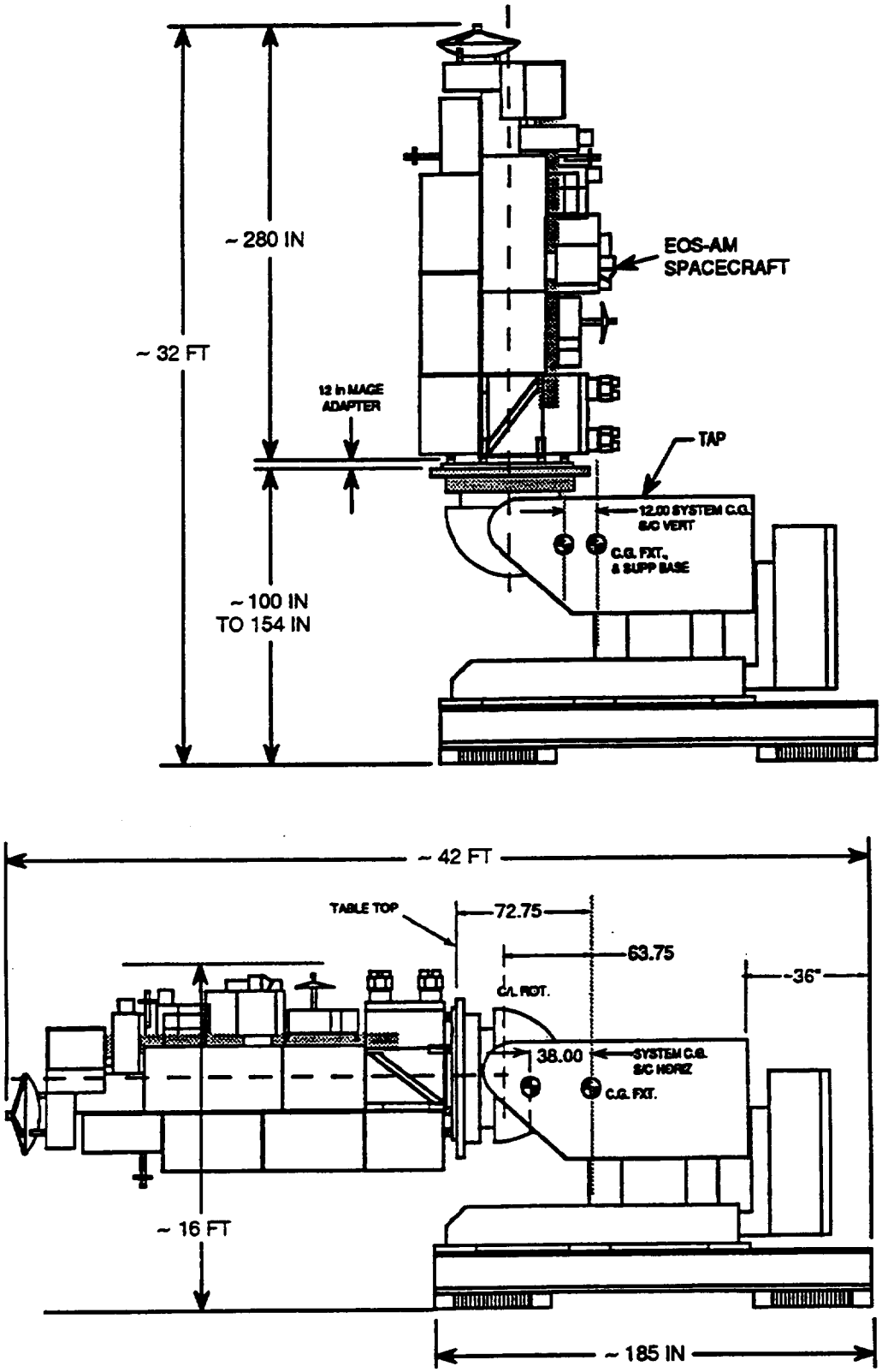

Figure 25. Three–Axis Positioner (TAP)

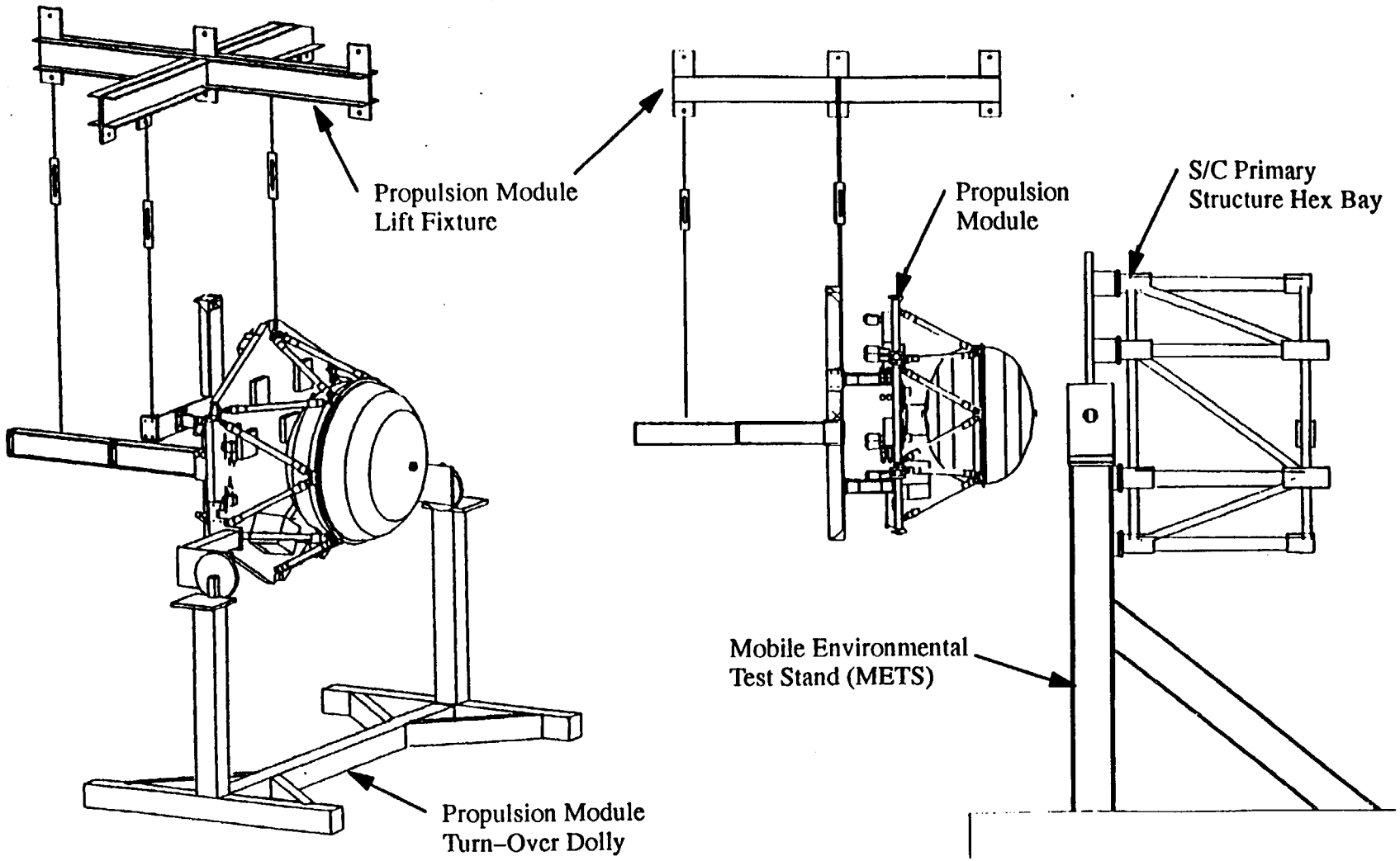

Figure 26. Propulsion Module Installation

7.5 Installation of C&DH/Comm Equipment Module and Related Hardware

The Spacecraft is positioned in the –Z up orientation in the TAP for the C&DH/Comm EM installation. The four kinematic mounts for the equipment module are installed on the Spacecraft node fittings and the upper kinematic mount bearings are installed in the base of the equipment module. The equipment module is lifted from its assembly fixture with its –Z panel up using the equipment module lift sling. The module is then be lowered onto its kinematic mounts on the Spacecraft and secured.

The next step installs the instrument bus data units (BDUs) and related fuse distribution boards (FDBs) onto the Spacecraft structure assembly. This equipment mounts directly to the structure with thermally conductive RTV used at their mutual interfaces. The housekeeping BDUs and FDBs are not included because they are installed inside of their designated equipment modules. The solar array drive (SAD) component is also mounted to the Spacecraft at this time. It is installed onto secondary structure which is on the –Z side of the Spacecraft. Electrical integration of the C&DH/Comm EM and its related equipment is performed per the C&DH/COMM EM and C&DH Subsystem test plans. The Spacecraft harnesses are mated to this equipment as part of the electrical integration procedure.

7.6 Installation of the Recorder Equipment Module

The Spacecraft is positioned in the –Z up orientation in the TAP for the recorder EM installation. The five kinematic mounts for the equipment module are installed on the Spacecraft node fittings and the upper kinematic mount bearings are installed in the base of the equipment module. The equipment module is lifted from its assembly fixture with its –Z panel up using the equipment module lift sling. The module is then lowered onto its kinematic mounts on the Spacecraft and secured. Electrical integration of the Recorder EM is performed per the Recorder EM test plan. The Spacecraft harnesses are mated to the EM as part of the electrical integration procedure.

7.7 Installation of the DAS Panel Equipment Module

The Spacecraft is positioned in the +Y up orientation in the TAP for the DAS panel equipment module installation. The five kinematic mounts for the equipment module are installed on the Spacecraft node fittings and the upper kinematic mount bearings are installed in the base of the equipment module. The equipment module is lifted from its assembly fixture with its +Y panel surface up using the equipment module lift sling. The module is then lowered onto its kinematic mounts on the spacecraft and secured. Electrical integration of the DAS panel EM is performed per the Spacecraft and Subsystem Test Plan. The Spacecraft harnesses are mated to the EM as part of the electrical integration procedure.

7.8 Installation of the Guidance, Navigation, and Control Equipment

The spacecraft is positioned in the –Z up orientation in the TAP for the Guidance Navigation and Control (GN&C) sensor EM installation. The six kinematic mounts for the equipment module optical bench are installed on the Spacecraft node fittings and the upper kinematic mount bearings

are installed in their appropriate locations on the optical bench. The optical bench is lifted from its assembly fixture with its –Z side up using the equipment module lift sling. The bench is lowered onto its kinematic mounts. The six kinematic mounts for the GN&C EM shell assembly are installed on the –Z side of the optical bench and the upper kinematic mount bearings are installed in the appropriate fittings of the EM shell assembly. The shell assembly is lifted from its assembly fixture with its –Z side up using the equipment module lift sling. The shell is lowered onto its kinematic mounts on the optical bench. The shell assembly is electrically mated to the optical bench equipment and the Spacecraft by removing a –Y access panel during the electrical integration of the module.

The Spacecraft is rotated in the TAP to the –Y up orientation for the Reaction Wheel Assembly (RWA) EM installation. The four kinematic mounts for the equipment module are installed on the Spacecraft node fittings and the upper kinematic mount bearings are installed in the base of the equipment module. The equipment module is lifted from its assembly fixture with its –Y panel up using the equipment module lift sling. The module is then be lowered onto its kinematic mounts on the Spacecraft and secured.

The next step in the installation of the GN&C equipment is the installation of the three magnetic torque rod assemblies (MTR). The roll and yaw MTRs are installed on the structure closeout panel located on the –Y side of bay 1. The pitch MTR is installed on the –X panel of the power EM. The two ESAs are installed on the Spacecraft next. The earth sensor assemblies (ESAs) are located on the +Z equipment panel at structure bay 1 (CERES panel). The fine sun sensor (FSS) head is assembled to its mounting bracket on the –Y panel of the power EM and the body mounted coarse sun sensor (CSS) is installed on the +Y panel of the GN&C sensor EM. Electrical integration of the GN&C subsystem equipment is performed per the Spacecraft and Subsystem Test Plan. The Spacecraft harnesses are mated to this equipment as part of the electrical integration procedures for the GN&C equipment.

7.9 Installation of Capillary Pumped Heat Transport System and the Heater Control Electronics Components

The Spacecraft is positioned in the +Z up orientation in the TAP for the installation of this thermal control equipment. The three CPHTS assemblies are individually lifted from their assembly/ holding fixture using a strongback and lift fixture attached to the overhead crane. The assembly is positioned with the radiator panel secured to the +Y side of the Spacecraft. The cold plate is on the +Z side of the Spacecraft and held in place with a MGSE bracket until it is mounted on the instrument baseplate. Installation of the ASTER SWIR CPHTS assembly requires the removal of the ASTER Instrument Mounting Plate (IMP) because the plumbing from the coldplate to the radiator will pass under the IMP. The IMP will be reinstalled immediately following the installation of the CPHTS assembly. The structure mounted HCEs (i.e., the HCEs which are not installed in equipment modules) are installed next. The HCEs are mounted to the Spacecraft structure at their designated locations. Electrical integration of this thermal control equipment is performed per the Thermal Control Subsystem test plan. The Spacecraft harnesses are mated to this equipment as part of the electrical integration procedure.

7.10 Fit Check of the Solar Array and HGA Deployment Assemblies

This section describes the mechanical fit check installation of the solar array and HGA and Deployment Assemblies. These fit checks are performed at this point in the integration flow to verify all the mechanical interfaces between the Spacecraft and S/A and HGA. This allows sufficient time to correct any anomalies which may be discovered before the S/A and HGA are installed for the Spacecraft acoustic test which occurs late in the Spacecraft test flow.

The Spacecraft is positioned in the +Z up orientation in the TAP for the solar array assembly installation. The S/A assembly is lifted from its holding fixture using a lift sling supplied by the S/A subcontractor. The S/A is positioned on the Spacecraft using the overhead crane such that the elevation hinge mounts to the solar array drive and the blanket box restraint mechanisms mount to the designated node fittings on the primary structure. The mounting of the S/A assembly is "flight–like" to verify that no mechanical interface anomalies exist.

Next, the Spacecraft is positioned in the –Z up orientation in the TAP for the HGA and deployment assembly installation. The first step of this assembly is to install the HGA boom/hinge assembly to the spacecraft using the overhead crane. The hinge is mounted to its interface on the SAD support plate and the boom is secured by its restraint mechanism which mounts to the other end of the boom. The HGA assembly (dish, electronics, and gimbal) is installed next by mounting the gimbal assembly to the end of the boom and the electronics box restraint assemblies to the +X Spacecraft structure. The mounting of the HGA assembly is "flight–like" to verify that no mechanical interface anomalies exist.

An electrical integration of the S/A and HGA assemblies takes place per the Spacecraft and Subsystem Test Plan. At the completion of this testing, the assemblies are removed from the Spacecraft. The next Spacecraft activities are the flight software interface test and the Spacecraft bus comprehensive performance test as shown in Figure 24 and described in the Spacecraft and Subsystem Test Plan.

7.11 Instrument Integration

The flow of activities performed for instrument integration is shown in Figure 27. The instruments are either mounted on Instrument Mounting Plates (IMP) or mounted directly to the Spacecraft Primary Structure through the use of kinematic mounts and secondary support structure. The term "Instrument" is used to denote either an Instrument on an Instrument Mounting Plate or an Instrument using a secondary mounting structure. The EOS–AM set of Instruments consists of MISR, MOPITT, ASTER, CERES, and MODIS. Instrument accommodation equipment (BDUs, FDBs, HCEs, CPHTS assemblies, harnesses, and interconnection brackets) are mechanically and electrically integrated with the spacecraft bus prior to instrument installation.

7.11.1 Instrument Accommodation Equipment Integration

All flight instrument accommodation equipment is installed to the spacecraft prior to instrument installation as described in previous sections. The instrument mounting plates are installed on the spacecraft during the alignment phase of the structure assembly build–up. For direct mounted

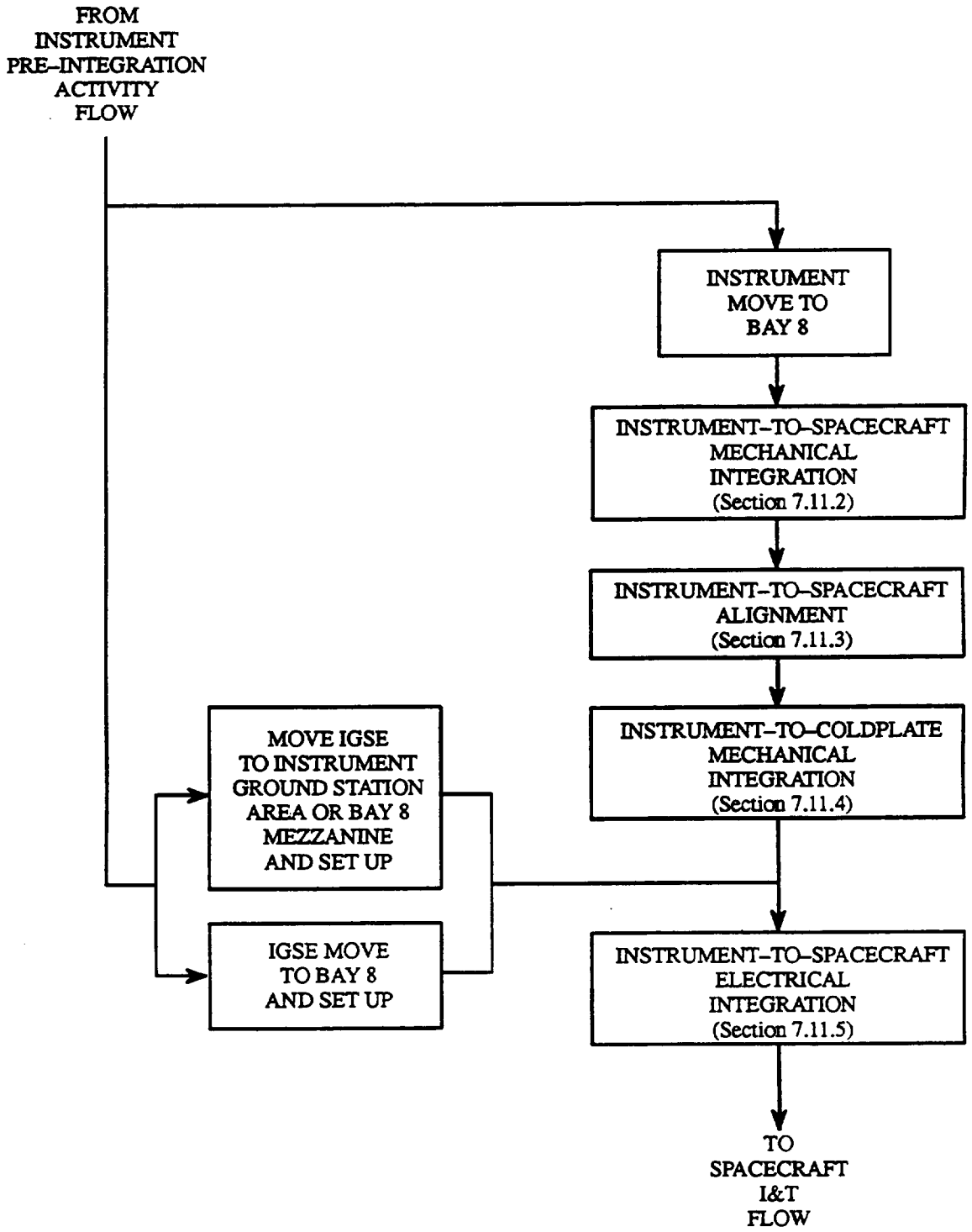

Figure 27. Instrument Integration Flow

instruments, the flight kinematic mounts (excluding the bearings mounted to the instrument) are installed on the spacecraft. The instrument–related Bus Data Unit (BDU), Fuse Distribution Board (FDB) and Heater Control Electronics (HCE) flight hardware are already mechanically and electrically integrated to the spacecraft.

The instrument Capillary–Pumped Heat Transport System (CPHTS) assemblies are assembled and tested as a unit off the spacecraft. The tested assemblies are then installed on the spacecraft prior to instrument integration. The coldplates are held in place on the structure with MGSE until they are mounted on the instrument.

7.11.2 Instrument Mechanical Integration

The instruments are installed onto the spacecraft by Astro Space mechanical I&T personnel with technical support supplied by instrument provider personnel per an approved Astro Space procedure. The spacecraft is oriented horizontally with the +Z axis up in the Spacecraft Three–Axis Positioner for all instrument installations.

All instrument equipment which weighs more than 35 pounds is lifted using the overhead crane and a lifting fixture and/or slings supplied by the instrument provider.

Direct mounted instruments are lifted from their holding fixture/container to a position above the spacecraft and lowered onto the kinematic mounts. Plate mounted instruments are lifted from their holding fixture/container to a position above the spacecraft and lowered onto the plate.

In some cases, the installation of an instrument significantly limits the access to the spacecraft interface of another instrument. Specifically, these cases are as follows (see Figure 28 for locations):

a. Access to the ASTER VSR mounting feet is limited if MOPITT and SWIR have been installed.

b. Access to the SWIR +Y kinematic mounts (locations SW–1 and SW–4) is limited if ASTER CSP has been previously installed.

c. Access to the MISR +Y kinematic mounts (locations MI–1 and MI–3) is limited if ASTER VSR, VEL, and MPS have been installed.

d. Access to the TIR +X kinematic mounts (locations TI–6 and TI–7) is limited if MODIS has already been installed.

Based on these installation access concerns, there is a preferred sequence of instrument installation. The recommended installation sequence for the instruments is MISR, ASTER, MOPITT and MODIS, respectively. The sequence for MOPITT and MODIS instruments may be reversed but they must follow the installation of both the MISR and ASTER instruments. Within the ASTER group of equipment, the VSR component should be installed first. SWIR should then be mounted to the spacecraft prior to the remainder of the boxes on the ASTER mounting plate (CSP, VEL, and MPS) and TIR. There is no preferred sequence for the installation of the CERES instrument. CERES may be installed before, in between, or after any of the instruments listed above.

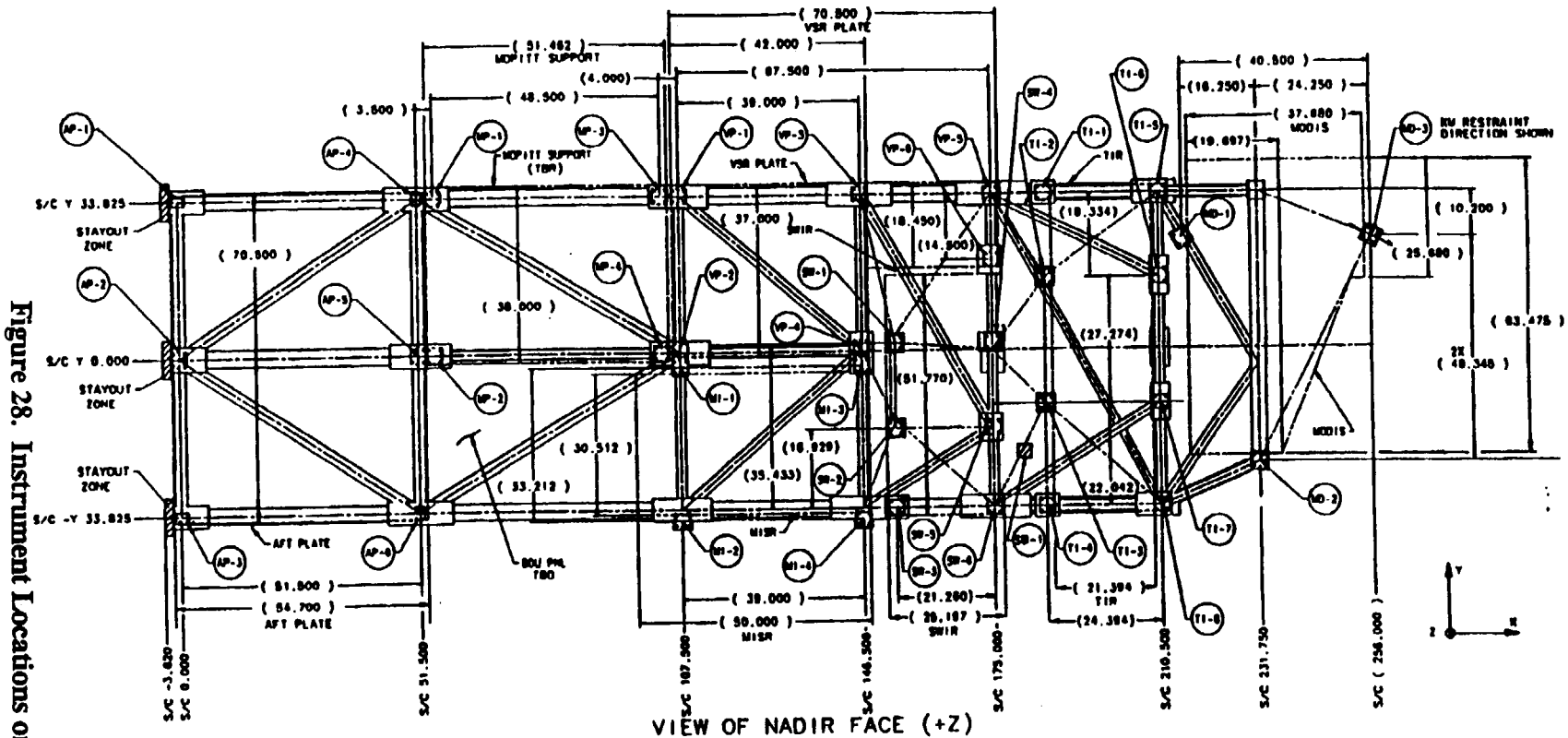

VIEW OF NADIR FACE (+Z)

INTERFACE POINT IDENTIFICATION: +Z FACE

LABEL	PURPOSE	RW RESTRAINT AXES	X	Y	Z	DETAIL
AP-1	AFT PLATE SUPPT	N/A	0.000	33.825	21.850	E
AP-2	AFT PLATE SUPPT	X,Y,Z (3-AXIS)	0.000	0.000	41.572	A
AP-3	AFT PLATE SUPPT	N/A	0.000	-33.825	21.850	E
AP-4	AFT PLATE SUPPT	N/A	51.500	33.825	21.250	E
AP-5	AFT PLATE SUPPT	Y,Z (2-AXIS)	51.500	0.000	41.572	B
AP-6	AFT PLATE SUPPT	N/A	51.500	-33.825	21.250	E
MP-1	MOPITT SUPPT (TBR)	N/A	55.000	33.825	21.750	M
MP-2	MOPITT SUPPT (TBR)	N/A	55.000	0.000	21.750	M
MP-3	MOPITT SUPPT (TBR)	N/A	103.500	33.825	21.750	M
MP-4	MOPITT SUPPT (TBR)	N/A	103.500	0.000	21.750	M
VP-1	VNIR/VSR PLATE	X,Y,Z (3 AXIS)	107.500	33.825	21.750	M
VP-2	VNIR/VSR PLATE	Z (1 AXIS)	107.500	0.720	21.750	M
VP-3	VNIR/VSR PLATE	Z (1 AXIS)	146.500	33.825	21.750	M
VP-4	VNIR/VSR PLATE	Z (1 AXIS)	146.500	0.720	21.750	M
VP-5	VNIR/VSR PLATE	Y,Z (2 AXIS)	175.000	33.825	21.750	M
VP-6	VNIR/VSR PLATE	Z (1 AXIS)	175.000	19.325	21.750	M
MI-1	MISR (DIRECT MOUNT)	Z (1 AXIS)	107.500	-3.009	21.750	A
MI-2	MISR (DIRECT MOUNT)	X,Y,Z (3 AXIS)	107.500	-36.221	21.750	A
MI-3	MISR (DIRECT MOUNT)	Z (1 AXIS)	146.500	-3.009	21.750	A
MI-4	MISR (DIRECT MOUNT)	Y,Z (2 AXIS)	146.500	-36.221	21.750	B

LABEL	PURPOSE	RW RESTRAINT AXES	X	Y	Z	DETAIL
SW-1	SWIR (DIRECT MOUNT)	Z (1 AXIS)	153.740	1.608	21.250	A
SW-2	SWIR (DIRECT MOUNT)	Y,Z (2 AXIS)	153.740	-16.896	21.250	B
SW-3	SWIR (DIRECT MOUNT)	Z (1 AXIS)	153.740	-33.825	21.250	A
SW-4	SWIR (DIRECT MOUNT)	Z (1 AXIS)	175.000	1.608	21.250	A
SW-5	SWIR (DIRECT MOUNT)	X,Y,Z (3 AXIS)	175.000	-16.896	21.250	A
SW-6	SWIR (DIRECT MOUNT)	Z (1 AXIS)	175.000	-33.825	21.250	A
TI-1	TIR (DIRECT MOUNT)	Z (1 AXIS)	186.106	33.825	8.350	A
TI-2	TIR (DIRECT MOUNT)	Z (1 AXIS)	186.106	15.491	8.350	A
TI-3	TIR (DIRECT MOUNT)	Z (1 AXIS)	186.106	-11.783	8.350	A
TI-4	TIR (DIRECT MOUNT)	Z (1 AXIS)	186.106	-33.825	8.350	A
TI-5	TIR (DIRECT MOUNT)	X,Z (2 AXIS)	210.500	33.825	8.350	B
TI-6	TIR (DIRECT MOUNT)	Y,Z (2 AXIS)	210.500	15.491	8.350	B
TI-7	TIR (DIRECT MOUNT)	Z (1 AXIS)	210.500	-11.783	8.350	A
TI-8	TIR (DIRECT MOUNT)	X,Z (2 AXIS)	210.500	-33.825	8.350	B
MD-1	MODIS (DIRECT MOUNT)	Z (1 AXIS)	215.500	23.625	-2.950	A
MD-2	MODIS (DIRECT MOUNT)	X,Y,Z (3 AXIS)	231.750	-24.720	-2.950	A
MD-3	MODIS (DIRECT MOUNT)	X/Y,Z (2 AXIS)	256.000	23.625	-2.950	B
SB-1	NADIR S-BAND MOUNT	N/A	TBD	TBD	TBD	N/A

Figure 28. Instrument Locations on Structure

Immediately after each instrument is installed and aligned (as described below), it is grounded to its spacecraft interface connector bracket. This bracket will be grounded to the spacecraft signal reference plane. A bonding measurement between the chassis of each instrument component and spacecraft chassis will be made. This bond resistance value must meet the requirements of the EOS–AM Spacecraft Electromagnetic Compatibility Control Plan, PN20005869.

7.11.2.1 ASTER Mechanical Integration

The ASTER mechanical integration is performed as described in Section 7.11.2. The ASTER Instrument Mounting Plate (IMP) is installed onto the Spacecraft prior to instrument integration. The plate mounted ASTER components (VSR, CSP, VEL, and MPS) are installed onto the Spacecraft by mounting them to the integrated IMP. This installation approach is preferred because of limited access to the IMP kinematic mounts during installation if the instrument components were mounted to it. The sequence of installation for the ASTER components, as discussed above, is VSR, SWIR, CSP, VEL, MPS, and TIR, respectively.

7.11.2.2 CERES Mechanical Integration

The mechanical integration of CERES includes the installation of the Fore (+X) and Aft (–X) CERES instruments. These instruments are installed onto the CERES instrument mounting plate which will have been previously integrated to the Spacecraft. There is no preferred order for the integration of CERES.

7.11.2.3 MISR Mechanical Integration

MISR is a direct mount instrument which is mechanically integrated as described in Section 7.11.2. MISR is the first instrument installed on the Spacecraft to allow better access to its +Y kinematic mounts. Access to these mounts is hindered by surrounding instruments as is described above.

7.11.2.4 MODIS Mechanical Integration

The MODIS mechanical integration is performed as described in Section 7.11.2. MODIS is a direct mount instrument which is installed after the ASTER TIR component so that the +X kinematic mounts of TIR are accessible during installation.

7.11.2.5 MOPITT Mechanical Integration

MOPITT is a direct mount instrument which is mechanically integrated as described in Section 7.11.2. MOPITT is installed after the MISR and ASTER instruments due to installation access concerns for these instruments.

7.11.3 Instrument to Spacecraft Alignment

The purpose of instrument to spacecraft alignment is to ensure that the instrument boresight(s) is aligned as specified in the instrument MICD with respect to the spacecraft reference axes. There are no co–alignment requirements between instruments.

Each instrument to be aligned is delivered with an optical cube installed. The IP also supplies Astro Space with the data which relates the instrument boresight to the instrument cube. The cube is located on the instrument such that two orthogonal faces (±Y and +Z) have a clear line of sight when the instrument is installed on the spacecraft. It is preferred to have a clear line of sight to orthogonal faces of the cube in the X, Y, and Z axes of the spacecraft. It is also preferred for all faces of the cube, except the mounting face, to have optical surfaces. This adds flexibility to the alignment procedures and significantly simplifies the instrument alignment measurements with the spacecraft in the horizontal and vertical orientations. The location of the cube on the instrument is documented in the instrument MICD.

Instrument–to–Spacecraft Alignment determines the shimming required to adjust the instrument in the roll and pitch axes. Shimming of an instrument takes place if the alignment budget is exceeded by the instrument or the Spacecraft. The instrument yaw alignment can not be adjusted at this point because it is established during instrument interface drilling at the structure assembly. For direct mounted instruments, the interface between the kinematic mounts and the spacecraft are shimmed, as required. For plate mounted instruments, the instrument interface is adjusted to meet its alignment requirement prior to instrument installation. This is accomplished by shimming the kinematic mounts which attach the instrument mounting plate to the structure. The instrument alignment measurements are repeated later in the Integration and Test flow. These measurements are performed just before and after spacecraft environmental testing to verify that any environmentally induced shifts are within the values allocated. For more details of the spacecraft alignment plan see reference document PN20008660 EOS–AM Spacecraft Alignment Plan.

7.11.4 Instrument Cold Plate Mechanical Integration

The coldplate is bolted to the instrument after the instrument is installed. CPHTS assemblies will be installed on the Spacecraft for the ASTER SWIR, ASTER TIR, and MOPITT instruments. This activity is performed by Astro Space I&T personnel using an approved Astro Space procedure. There is sufficient access to the coldplates from within the spacecraft to permit coldplate installation and removal from the instrument. MGSE is used to support the coldplates when the instruments are not installed. The CPHTS assembly can only be installed or removed from the spacecraft when its corresponding instrument is not on the spacecraft. For installation or removal of the SWIR CPHTS assembly, the ASTER instrument mounting plate (including the ASTER instrument and accommodation components which are mounted to it) must also be removed. The coldplate is mounted to the instrument using 24 bolts and a Chotherm 1679 thermal gasket. The thermal gasket is adhered to the coldplate prior to installation. Ground cooling channels are contained in the flight coldplates for instrument cooling during spacecraft I&T when the CPHTS assemblies are not operating in CPL or reflux mode.

7.11.5 Instrument Electrical Integration

This task will be performed as described in PN20008664, Spacecraft and Subsystem Test Plan.

7.12 Thermal Blanket Installation

Prior to performing the Spacecraft EMC test, the Spacecraft thermal blankets are installed in preparation for the thermal vacuum testing as shown on the Spacecraft test flow, Figure 24. The Spacecraft is in the TAP and positioned in various orientations to install thermal blankets on the entire Spacecraft.

The installation process begins with the application of velcro to the Spacecraft. Mylar templates of the thermal blankets are used to determine the locations for the bonding of velcro on the Spacecraft. The thermal blankets are installed next per the engineering drawing and thermal engineering direction. Radiator surfaces which were not completed at the component/major assembly level are prepared with silver/teflon tape at this time also. Blankets are installed in flight configuration as much as possible for the Spacecraft thermal vacuum test.

7.13 Installation of the Solar Array and HGA Deployment Assemblies

The installation of these two assemblies is identical to the fit check installations described in section 5.10, except that the HGA and S/A restraint mechanisms are tensioned to flight pre–loads. After the S/A has been installed, the four coarse sun sensor (CSS) assemblies are mounted to the S/A panels. Electrical integration of these assemblies is performed per the Spacecraft and Subsystem Test Plan. All harnesses are mated as part of the electrical integration. Spacecraft testing continues with acoustic and pyro shock tests as shown in Figure 24.

7.14 Installation of Flight Launch Vehicle Adapter

The flight Launch Vehicle Adapter (LVA) will be installed onto the Spacecraft in Bay 8 after the completion of the gas fired deployment verification tests as shown in Figure 24. The LVA is installed onto the Spacecraft acoustic test fixture. The Spacecraft is then rotated to the +X up (vertical) orientation in the TAP and lifted using the Spacecraft vertical lifting sling. The Spacecraft is lowered onto the LVA and installed per engineering definition. Launch vehicle ICD #(TBD–18) defines this configuration. The LVA kick–off springs are adjusted to flight loads during the installation. The six flight separation bolts are also installed and tensioned in flight configuration. After the Spacecraft has been installed on the LVA and acoustic test fixture, the Spacecraft is moved to the acoustic test chamber for testing.

7.15 Installation of Flight Batteries

The Spacecraft is positioned in the +Y up orientation for the removal of the workhorse batteries after they have been completely discharged. The workhorse battery panel is removed from its Spacecraft kinematic mounts using the equipment module lift sling and placed on its handling fixture. The +Y Power EM workhorse battery panel is unbolted from the EM and removed from the Spacecraft with the EM lift sling also. The flight battery panels are reinstalled on the Spacecraft using the same technique. There is access to mate harnesses to the batteries inside the power EM through an access hole in the –X EM panel (the module is not disassembled for access). Electrical integration of the batteries will be performed per the Spacecraft and Subsystem Test Plan. After this activity the final Spacecraft testing is performed and the spacecraft is prepared for shipment to the launch site as described in the next section.

7.16 Spacecraft Preparations for Shipment

The Spacecraft is shipped to the launch site in the modified GRO shipping container. The HGA reflector is removed from the HGA electronics box to accommodate the Spacecraft in the shipping container. The spacecraft is lifted from the TAP in the –Y up configuration using the horizontal lift sling and lowered into the GRO shipping container. The Spacecraft is attached to MAGE aft and forward supports in the container.

(This page intentionally left blank.)

8 LAUNCH SITE INTEGRATION

The launch site integration activities begin when the Spacecraft arrives at Vandenberg AFB. A flow of the launch site activities is shown in Figure 29. The Spacecraft is transported to a test facility where it is unpacked, inspected, tested and verified as ready for launch. The Spacecraft is placed in the modified GRO shipping container for transportation to the launch site facility. The Spacecraft is transported to the launch site facility Building 1610 for electrical testing, fuel loading, and final mechanical integration activities. The fairing is installed after the electrical tests and mechanical closeout activities have been completed. The Spacecraft is then transported to the launch pad, installed on the booster, and readied for launch. Figure 30 **(TBD–19)** illustrates the Spacecraft/Launch Vehicle integration activities. The following is a discussion of the various integration activities performed at the Launch Site.

8.1 Spacecraft Inspection and Removal From Container

The cover and access panels are removed from the modified GRO shipping container and the Spacecraft is inspected for any obvious damage which may have occurred during shipping. The Spacecraft is then removed from the container using the horizontal lift sling and mounted on the Three–Axis Positioner. A full close–up inspection of the Spacecraft is performed at this time.

8.2 HGA Reflector Installation

The HGA Dish Reflector is reinstalled on the HGA electronics box per drawing requirements. Electrical integration of the antenna is performed as part of the launch site comprehensive performance test per the Spacecraft and Subsystem Test Plan.

8.3 Spacecraft Fuel Loading

All pre–flight propulsion subsystem servicing is conducted in a certified hazardous operations facility which will provide adequate ventilation, scrubbing, and drainage provisions for hazardous waste. These operations include post shipment integrity testing to verify flight readiness and propellant loading. Integrity tests include pressure testing at maximum expected operating pressure and leakage. All fuel loading operations are performed by personnel equipped with self–contained atmospheric pressure ensemble (SCAPE) protective suits. A specialized hydrazine load cart is utilized to accomplish all fuel handling. Propellant gauging during fuel loading is performed by weight through the use of an explosion proof scale that monitors real time fluid transfer from holding drums to the spacecraft. Fuel is passed through a 5–micron absolute filter and loaded through a spacecraft service valve. Loading of the propulsion subsystem is performed by pulling vacuum on the fluid lines and tank to allow propellant wetting up to the service valves and thruster valves. A hydrazine sample is taken from the load cart at the start of fuel loading for chemical analysis to provide a record of the exact state of the hydrazine on the loading day which will be compared against a previous sample analysis taken approximately one week earlier to verify purity of the propellant. At the conclusion of the loading, the propulsion subsystem is pressurized to blanket pressure and all equipment will be drained, flushed, and de–contaminated.

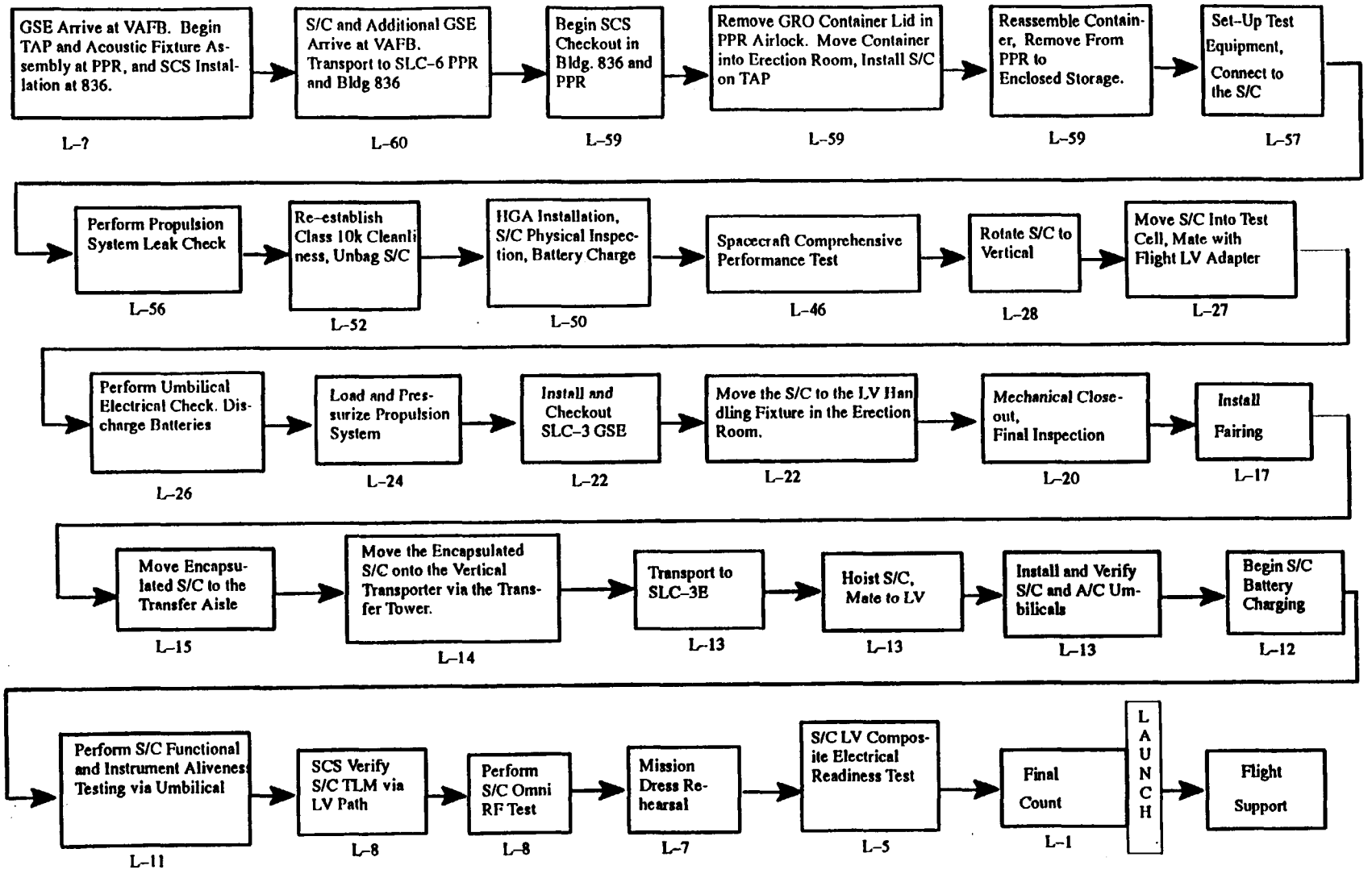

NOTE: "L-" days are calendar days prior to launch

Figure 29. Spacecraft Launch Site Flow

PN20005405
30 July 1993

(TBD–19)

Figure 30. Spacecraft/Launch Vehicle Integration Activities

8.4 Spacecraft Mechanical Closeout and Final Inspection

(TBD–20)

8.5 Install Launch Vehicle Fairing

(TBD–21)

8.6 Launch Vehicle Integration

(TBD–22)

8.7 Final Spacecraft Closeouts

(TBD–23)

9 NOTES

9.1 Acronyms and Abbreviations

AGE	Aerospace Ground Equipment
ASTER	Advanced Spaceborne Thermal Emission and Reflection Radiometer
BATT	Battery
BDU	Bus Data Unit
C&DH	Command and Data Handling
CERES	Clouds and the Earth's Radiant System
CG	Center–of–gravity
Comm	Communications
CPHTS	Capillary Pumped Heat Transportation System
CSS	Coarse Sun Sensor
DAS	Direct Access Subsystem
DPRO	Defense Plant Representative Office
EAS	Electrical Accommodation Subsystem
EGSE	Electrical Ground Support Equipment
EIC	Electrical Integration Checkout
EM	Equipment Module
EMC	Electromagnetic Compatibility
EMI	Electromagnetic Interference
EOS	Earth Observing System
EP	Equipment Panel
FAR	Flow Alteration Record
FDB	Fuse Distribution Board
FSS	Fine Sun Sensor
GFE	Government Furnished Equipment
GN&C	Guidance, Navigation, and Control
GRO	Gamma Ray Observatory
GSE	Ground Support Equipment
GSERD	Ground Support Equipment Requirements Document
GSFC	Goddard Space Flight Center

HCE	Heater Control Electronics
HGA	High Gain Antenna
I&T	Integration and test
IBDU	Instrument Bus Data Unit
ICD	Interface Control Document
IMP	Instrument Mounting Plate
IP	Instrument Provider
IPR	Integration Procedure and Record
LVA	Launch Vehicle Adapter
MAGE	Mechanical Aerospace Ground Equipment
METS	Mobile Environmental Transportation Stand
MGSE	Mechanical Ground Support Equipment
MISR	Multi–angle Imaging Spectroradiometer
MLI	Multi Layer Insulation
MODIS	Moderate Resolution Imaging Spectroradiometer
MOPITT	Measurements of Pollution in the Troposphere
MTM	Mechanical Test Model
NASA	National Aeronautics and Space Administration
PEM	Power Equipment Module
PM	Propulsion Module
RF	Radio Frequency
RWA	Reaction Wheel Assembly
S/A	Solar Array
S/C	Spacecraft
SAA	Solar Array Assembly
SAD	Solar Array Drive
SSTP	Spacecraft and Subsystem Test Plan
SSU	Sequential Shunt Unit
STE	Special Test Equipment
T–V	Thermal–vacuum
TAP	Three–Axis Positioner
TBD	To Be Determined

TP	Test Procedure
Umb	Umbilical
VAFB	Vandenburg Air Force Base
WSMCR	Western Space and Missile Center Regulation
WTR	Western Test Range

(This page intentionally left blank.)

PS20005404A
CAGE No. 49671
06 August 1993

Verification Specification
EOS–AM Spacecraft
(VRD–110)

Prepared under:
Contract NAS5–32500
NASA Goddard Space Flight Center
Greenbelt, Maryland 20771

Prepared by:
Martin Marietta Corporation
Astro Space
P.O. Box 800
Princeton, New Jersey 08543–0800

DCC080593

(This page intentionally left blank.)

REVISION LOG

This log identifies those portions of this document which have been revised since the original issue. Revised portions of each page, for the current revision only, are identified by marginal striping.

Revision	Paragraph Number(s) Affected	Rev. Date	Approval
Initial Issue		31 Dec. 1992	CM/GSR
A	Revised per ECN EOS0049	06 Aug. 1993	CM/GSR

(This page intentionally left blank.)

TABLE OF CONTENTS

SECTION / PARAGRAPH	TITLE	PAGE
1	INTRODUCTION	1
1.1	Scope	1
1.2	Applicability	1
2	APPLICABLE DOCUMENTS	3
2.1	Government Documents	3
2.1.1	Specifications	3
2.1.2	Standards	3
2.2	Non–Government Documents	4
2.2.1	Specifications	4
2.2.2	Other Documents	4
3	VERIFICATION PROCESS	7
3.1	General	7
3.2	Verification Methods	7
3.3	Verification Hardware	8
3.3.1	Qualification Hardware	8
3.3.1.1	Qualification Test Model (QTM)	8
3.3.1.2	Protoflight Hardware	10
3.3.2	Acceptance Hardware	10
3.4	Verification Documentation	11
3.4.1	Verification Reports	11
3.4.2	Verification Test Procedures	11
3.4.3	Activity Log Book	14
3.5	Special Procedures	14
3.5.1	Deviations	14
3.5.2	Unscheduled Activities	14
3.5.3	Anomalies, Failures, and Retest	15
3.5.3.1	Component Anomalies and Failures	15
3.5.3.2	EM and Other Major Assembly Anomalies and Failures	16

TABLE OF CONTENTS (Continued)

SECTION / PARAGRAPH	TITLE	PAGE
3.5.3.3	Instrument and Spacecraft I&T Anomalies and Failures	20
3.5.3.4	Failure Review Board (FRB)	22
3.5.3.5	Failure Reporting	22
3.6	General Test and Inspection Requirements	22
3.6.1	Preparation for Test Program	23
3.6.2	Test Sequence	23
3.6.3	Test Evaluation	23
3.6.3.1	Trend Parameters	23
3.6.4	Test Facilities	24
3.6.5	Calibration	24
3.6.6	Tolerances	24
3.6.7	Vibration and Acoustic Testing	26
3.6.7.1	General	26
3.6.7.2	Instrumentation	27
3.6.7.3	Measurement of Vibration	27
3.6.7.4	Test Set–Up	28
3.6.7.5	Test	28
3.6.8	Thermal Vacuum (T/V) Testing	28
3.6.8.1	General	28
3.6.8.2	Measurement and Instrumentation	30
3.6.8.3	Precautions	30
3.6.8.4	Test Set–up	31
3.6.8.5	Test Item Operations	31
3.6.8.6	Thermal Cycling	31
3.6.8.7	Thermal Vacuum Acceptance Test	32
3.6.9	EMC Tests	32
3.6.10	Life Verification Requirements	33
3.6.11	Electrical Interface Verification Tests	34
3.6.12	Mass Properties	34
3.6.13	General Inspection Requirements	34

TABLE OF CONTENTS (Continued)

SECTION / PARAGRAPH	TITLE	PAGE
4	COMPONENT VERIFICATION	35
4.1	General	35
4.2	Analysis	35
4.2.1	Mechanical	35
4.2.2	Mass Properties	35
4.2.3	Thermal	36
4.2.3.1	Components Requiring Detailed Modelling and Reporting	36
4.2.4	Electrical	38
4.2.5	Single Event Upset (SEU)	38
4.3	Inspections	38
4.4	Environmental Test Sequence	38
4.4.1	Trend Parameters	38
4.4.2	Electrical Function	39
4.4.2.1	Functional Test	39
4.4.2.2	Comprehensive Performance Test	39
4.4.2.3	Environmental Performance Test	40
4.4.3	EMC Tests	40
4.4.4	Mechanical Testing	40
4.4.4.1	Resonant Frequency Check/Signature Test (Low Level Sine Sweep)	41
4.4.4.2	Random Vibration	42
4.4.4.3	Acoustics	43
4.4.4.4	Pyro Shock	43
4.4.4.5	Strength Test	43
4.4.5	Thermal Vacuum	45
4.4.5.1	Measurement and Instrumentation	45
4.4.5.2	Precautions	45
4.4.5.3	Test Set–up	46
4.4.5.4	Test Item Operations	46
4.4.5.5	Thermal Cycling	47

TABLE OF CONTENTS (Continued)

SECTION / PARAGRAPH	TITLE	PAGE
4.4.5.6	Qualification	50
4.4.5.7	Acceptance	50
4.4.6	Temperature Cycle	50
4.4.6.1	Measurement and Instrumentation	50
4.4.6.2	Precautions	50
4.4.6.3	Test Set–up	51
4.4.6.4	Test Item Operations	51
4.4.6.5	Temperature Cycling	51
4.4.6.6	Qualification	51
4.4.6.7	Acceptance	51
4.4.7	Thermal Balance	51
4.4.7.1	General	52
4.4.7.2	Measurement and Instrumentation	52
4.4.7.3	Precautions	52
4.4.7.4	Test Set–up	52
4.4.7.5	Test Item Operations	53
4.4.7.6	Test Levels and Cycles	53
4.5	Demonstrations	53
4.5.1	Mechanical Function	53
4.5.1.1	Precautions	53
4.5.2	Leakage	53
4.6	Mass Properties	54
4.7	Interface Verification	54
4.7.1	Internal Interfaces	54
4.7.2	External Interfaces	54
5	EQUIPMENT MODULE VERIFICATION	55
5.1	General	55
5.2	Analysis	55
5.2.1	Mechanical	55

TABLE OF CONTENTS (Continued)

SECTION / PARAGRAPH	TITLE	PAGE
5.2.2	Mass Properties	55
5.2.3	Thermal	55
5.2.4	Electrical	56
5.3	Inspections	56
5.4	Environmental Test Sequence	56
5.4.1	Trend Parameters	56
5.4.2	Electrical Function	56
5.4.2.1	Functional Test	57
5.4.2.2	Comprehensive Performance Test	57
5.4.2.3	Environmental Performance Test (EPT)	57
5.4.3	EMC Tests	58
5.4.4	Modal Survey	58
5.4.4.1	General	58
5.4.4.2	Instrumentation and Measurement	58
5.4.4.3	Test Set–Up	58
5.4.4.4	Test	58
5.4.5	Optical Bench Vibration	59
5.4.5.1	General	59
5.4.5.2	Instrumentation and Measurement	59
5.4.5.3	Test Set–Up	59
5.4.5.4	Test Levels	59
5.4.6	Acoustic Test	60
5.4.6.1	General	60
5.4.6.2	Measurement and Instrumentation	60
5.4.6.3	Precautions	60
5.4.6.4	Test Set–Up	60
5.4.6.5	Test Levels	60
5.4.7	Sine Vibration	61
5.4.7.1	Strength Test (Sine Burst)	61
5.4.7.2	Sine Sweep Vibration Test	61

TABLE OF CONTENTS (Continued)

SECTION / PARAGRAPH	TITLE	PAGE
5.4.8	Mechanical Shock	62
5.4.9	Thermal Balance	62
5.4.9.1	General	62
5.4.9.2	Measurement and Instrumentation	62
5.4.9.3	Precautions	62
5.4.9.4	Test Set–up	63
5.4.9.5	Test Item Operations	63
5.4.9.6	Test Levels and Cycles	63
5.4.10	Thermal Vacuum	63
5.4.11	Temperature Cycle (Thermal Cycle at Ambient Pressure)	63
5.4.11.1	Measurement and Instrumentation	63
5.4.11.2	Precautions	63
5.4.11.3	Test Set–up	65
5.4.11.4	Test Item Operations	65
5.4.11.5	Temperature Cycling	65
5.4.11.6	Workmanship Temperature Testing	65
5.5	Demonstrations	66
5.5.1	Mechanical Function	66
5.5.1.1	Precautions	66
5.5.2	Leakage	66
5.6	Mass Properties	66
5.7	Interface Verification	67
5.7.1	Internal Interfaces	67
5.7.2	External Interfaces	67
6	MAJOR ASSEMBLY VERIFICATION	69
6.1	General	69
6.2	Analysis	69
6.2.1	Mechanical	69
6.2.2	Mass Properties	69

TABLE OF CONTENTS (Continued)

SECTION / PARAGRAPH	TITLE	PAGE
6.2.3	Thermal	69
6.2.3.1	Detailed Thermal Model Requirements	70
6.2.3.2	Surface Model Requirements	70
6.2.3.3	Reduced Node Model Requirements	71
6.2.4	Electrical	71
6.3	Inspection	71
6.4	Environmental Test Sequence	72
6.4.1	Trend Parameters	72
6.4.2	Electrical Function	72
6.4.2.1	Functional Test	72
6.4.2.2	Comprehensive Performance Test	72
6.4.2.3	Environmental Performance Test	73
6.4.3	EMC Tests	73
6.4.4	Static Load Tests	73
6.4.4.1	General	73
6.4.4.2	Instrumentation/Measurement	73
6.4.4.3	Tests	73
6.4.5	Sine Burst Strength Test	74
6.4.5.1	Instrumentation and Measurement	74
6.4.5.2	Test Set–Up	75
6.4.5.3	Test Levels	75
6.4.6	Modal Survey	75
6.4.6.1	General	75
6.4.6.2	Instrumentation/Measurement	75
6.4.6.3	Test Set–Up	75
6.4.6.4	Test	75
6.4.7	Mechanical Shock	76
6.4.7.1	General	76
6.4.7.2	Test Set–Up	76
6.4.7.3	Test	76

TABLE OF CONTENTS (Continued)

SECTION / PARAGRAPH	TITLE	PAGE
6.4.8	Acoustic Testing	76
6.4.8.1	General	76
6.4.8.2	Test Set–Up	76
6.4.8.3	Test Levels	76
6.4.9	Thermal Balance	77
6.4.10	Thermal Vacuum	77
6.4.10.1	Solar Array	77
6.4.10.2	High Gain Antenna	77
6.4.11	Temperature Cycling	77
6.4.11.1	Propulsion Module	77
6.5	Alignment	77
6.5.1	Instrumentation/Measurement	78
6.5.2	Test	78
6.6	Demonstrations	78
6.6.1	Mechanical Function	78
6.6.1.1	Precautions	78
6.6.2	Pressure Testing – Propulsion Module	78
6.6.3	Pressure Testing – CPHTS	79
6.6.4	Flow Rate – Propulsion Module	79
6.6.5	Latch Valve Leak Check – Propulsion Module	79
6.6.6	Leakage Check – General	79
6.7	Mass Properties	80
6.8	Interface Verification	80
6.8.1	Internal Interfaces	80
6.8.2	External Interfaces	80
7	SPACECRAFT VERIFICATION	81
7.1	General	81
7.2	Analysis	81
7.2.1	Mechanical	81

TABLE OF CONTENTS (Continued)

SECTION / PARAGRAPH	TITLE	PAGE
7.2.2	Mass Properties	82
7.2.3	Thermal	82
7.2.4	Electrical	83
7.2.5	Mission	83
7.3	Inspections	84
7.4	Environmental Testing Sequence	84
7.4.1	Trend Parameters	84
7.4.2	Electrical Function	84
7.4.2.1	Instrument Pre–Integration Tests	85
7.4.2.2	Spacecraft Tests Before Instrument Integration	86
7.4.2.3	Spacecraft Tests, Following Instrument Integration	87
7.4.3	Alignment	91
7.4.3.1	Test	91
7.4.4	CPHTS Performance (Ambient)	91
7.4.5	EMC Tests	92
7.4.6	Thermal Balance/Thermal Vacuum Test	92
7.4.6.1	General	92
7.4.6.2	Precautions	94
7.4.6.3	Test Set–Up	94
7.4.6.4	Test	95
7.4.7	Acoustic Test	98
7.4.7.1	General	98
7.4.7.2	Measurement and Instrumentation	99
7.4.7.3	Precautions	99
7.4.7.4	Test Set–Up	99
7.4.7.5	Test Level	99
7.4.7.6	Test Item Operations	99
7.4.8	Shock	99
7.4.8.1	General	99
7.4.8.2	Test	100

TABLE OF CONTENTS (Continued)

SECTION / PARAGRAPH	TITLE	PAGE
7.5	Demonstrations	100
7.5.1	Mechanical Function (Deployment)	100
7.5.1.1	Precautions	100
7.5.2	Solar Array Full Deployment	100
7.5.3	Leakage	101
7.5.4	Trouble–Free Operations	101
7.6	Mass Properties	101
7.7	Interface Verification	101
7.7.1	Internal Interfaces – Spacecraft Bus	102
7.7.2	External Interfaces – Spacecraft Bus to Instrument	102
7.7.3	External Interfaces – Spacecraft to Launch Vehicle	102
8	SOFTWARE	103
8.1	Requirements	103
8.2	Verification	103
9	END–TO–END VERIFICATION	105
9.1	General	105
9.2	Spacecraft–to–Network Compatibility Test	105
9.3	End–to–End Compatibility Test	105
9.4	Mission Simulation	106
9.5	Operational Readiness	106
9.6	DAS Compatibility	107

TABLE OF CONTENTS (Continued)

SECTION / PARAGRAPH	TITLE	PAGE
	APPENDIX I	
10	ABBREVIATIONS AND ACRONYMS	109
	APPENDIX II	
20	DEFINITIONS	115
	APPENDIX III	
30	SPACECRAFT FLIGHT HARDWARE TEST MATRIX	121
	APPENDIX IV	
40	TYPICAL FLIGHT HARDWARE TEST FLOW	139

LIST OF FIGURES

FIGURE	TITLE	PAGE
1	EOS–AM Spacecraft Specification Tree	2
2	Comparison of Thermal Test Levels	9
3	Comparison of Vibroacoustic Test Levels and Durations	9
4	Verification Report Form	12
5	Random Vibration Loads	42
6	Component Thermal Cycle Test Profile	48
7	Equipment Module Temperature Cycle Test Sequence	64
8	Spacecraft Thermal–Vacuum Test Profile	93
9	Typical Component Flow	140
10	Typical Equipment Module Test Flow	141
11	GN&C Sensor Equipment Module Test Flow (Sheet 1 of 2)	142
12	Propulsion Module Integration and Test Flow	144
13	Protoflight Structure Qualification Test Flow	145
14	Spacecraft Integration Flow	146
15	Spacecraft Protoflight Test Flow	147
16	High Gain Antenna Test Flow	148
17	Solar Array Test Flow	149

LIST OF TABLES

TABLE	TITLE	PAGE
I	Hardware to be QTM Tested	10
II	Retest Logic for Component Random Failures	17
III	Retest Logic for EM or Other Major Assembly Failure Caused by Component Random Failure	18
IV	Retest Logic for EM or Other Major Assembly Failure Caused by Random Installation or Assembly Error	19
V	Retest Logic for Spacecraft Bus, EM, or Other Major Assembly Failure Caused by Random Harness Failure (harness reworked in place)	20
VI	Retest Logic for Spacecraft Bus, EM, or Other Major Assembly Failure Caused by Random Harness Failure (harness removed for rework)	20
VII	Retest Logic for Instrument/Spacecraft I&T Failures Caused by Random Component, EM, or Other Major Assembly Failure (Non–Harness Housekeeping Equipment)	21
VIII	Maximum Allowable Test Tolerances	25
IX	Flight Components Requiring Thermal–Vacuum Testing	28
X	Thermal Vacuum Criteria Guidelines	31
XI	Suggested – Thermal Parameters Predicted for (Component Name)	37
XII	Components Which Are Powered On at Launch	41
XIII	Spacecraft Flight Hardware Test Matrix	122

TBD LOG

ITEM	SECTION	PAGE	SUBJECT	RESP.	DUE
TBD–1	2.1.1	3	Release Date, MISR UIID	F. Komro	9/1/93

1 INTRODUCTION

1.1 Scope

This specification identifies and defines the applicable verification methods (analyses, inspections, demonstrations, and tests), the applicable test levels and environmental test parameters/tolerances for the verification program of the Earth Observing System (EOS) Spacecraft, its subsystems, equipment modules, major assemblies, and components. Instruments are included in the top Spacecraft assembly level and, as such, are part of the Spacecraft verification program. However, individual instrument verification is not covered in this document. Lower-level component and EM verification requirements described in this document do not apply to instruments. The test environments and criteria in this specification are established with regard to the natural and induced environments to which flight hardware for the EOS-AM mission will be exposed. The design environments are specified in the EOS General Interface Specification (GIS), IS20008501, and for random vibration and shock loads, in the individual component specifications.

1.2 Applicability

This specification will be used in conjunction with other documents to generate test plans and procedures for verification of the performance of EOS Spacecraft flight hardware and support equipment. The verification requirements described in this specification are applicable to all EOS-AM hardware (H/W) and equipment.

This document is driven by the Verification Plan (PN20005404). That plan defines the verification program required of the EOS-AM program, and identifies all verification activities for the Spacecraft, its elements (components, equipment modules, major assemblies, software, subsystems, Spacecraft Bus) and external interfaces (instruments, ground support equipment (GSE), ground segment, flight support equipment (FSE). The Verification Specification takes those verification activities and provides the performance, interface, environmental, and test parameter requirements associated with each one. In addition, it provides definitions of all verification terms and standards which will be used.

The Comprehensive Test Plan (PN20008664) is also driven by the Verification Plan. It takes each test activity required by the Verification Plan, and defines how the test will be implemented. The test parameters given in the Comprehensive Test Plan shall be consistent with the test requirements defined herein. Deviations from the requirements of this document shall be stated in a separate table in the individual performance specifications.

Verification requirements which are specific to a Spacecraft element (component, EM, subsystem, major assembly) are specified in Section 4 of the performance specification for that element. Verification requirements given in all performance specifications shall be consistent with the generic requirements defined herein.

The relationship of this specification and related verification documents to the EOS-AM Specification Tree is shown in Figure 1.

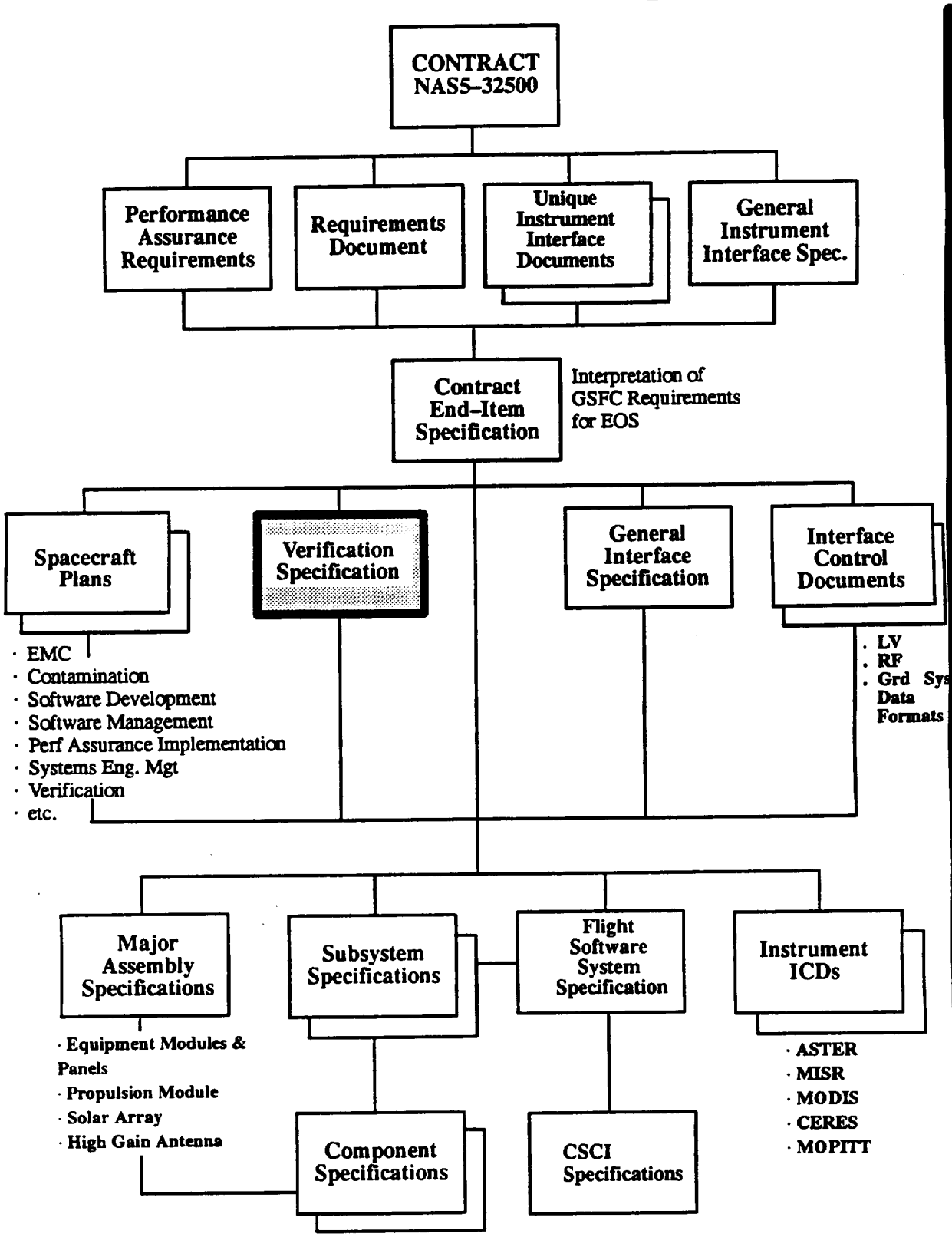

Figure 1. EOS–AM Spacecraft Specification Tree

2 APPLICABLE DOCUMENTS

The following documents form a part of this specification to the extent specified herein, and are subject to constraint, exception, or amendment by the EOS Contract End Item (CEI) Specification (PS20005396). Only documents of the given revision or issue dates shall be applicable. For documents listed without specific revision or issue dates, the version current as of the issue date of this specification shall be applicable.

2.1 Government Documents

The following documents of the exact issue shown, form a part of this specification to the extent specified herein. In the event of conflict between the documents referenced herein and the contents of this specification, the contents of this specification shall be considered a superseding requirement.

2.1.1 Specifications

Military

MIL–C–45662A	Calibration System Requirements

NASA–GSFC

GSFC–420–05–02	Performance Assurance Requirements (PAR) for the EOS–AM Spacecraft
GSFC–420–03–02	General Instrument Interface Specification (GIIS) for the Earth Observing System (EOS) Observatory
GSFC–421–12–11–01	Unique Instrument Interface Document for the Advanced Spaceborne Thermal Emission and Reflection Radiometer (ASTER)
GSFC–421–12–04–01	Unique Instrument Interface Document for the Moderate–Resolution Imaging Spectrometer (MODIS)
GSFC–421–12–12–02	Unique Instrument Interface Document for the Clouds and Earth's Radiant Energy System (CERES)
GSFC–421–12–03–02 dated **(TBD–1)**	Unique Instrument Interface Document for the Multi–Angle Imaging Spectro–Radiometer (MISR)
GSFC–421–12–15–02	Unique Instrument Interface Document for the Measurement of Pollution in the Troposphere (MOPITT)

2.1.2 Standards

Federal

FED–STD–209D	Clean Room and Work Station Requirements, Controlled Environment

Military

MIL–STD–1522A	Standard General Requirements for Safe Design and Operation of Pressurized Missile and Space Systems
MIL–STD–1541	EMC Requirements for Space Systems
MIL–STD–461C	Electromagnetic Emissions and Susceptibility Requirements for Control of EMI
MIL–STD–462	Measurements of EMI Characteristics
MIL–STD–463A	Definitions and Systems of Units, Electromagnetic Interference and Electromagnetic Compatibility Technology

2.2 Non–Government Documents

The following documents of the latest issue, form a part of this specification to the extent specified herein. In the event of a conflict between the documents referenced herein and the contents of this specification, the contents of this specification shall be considered a superseding requirement.

2.2.1 Specifications

PS20005396	EOS–A Spacecraft Contract End Item (CEI) Specification (SEP–101)
IS20008501	General Interface Specification (GIS) for the EOS–AM Spacecraft (ICD–101)
IS20008503 30 April 1993	Interface Requirements Document for EOS–AM Spacecraft to Launch Vehicle
IS20008504	Radio Frequency Interface Control Document Between the EOS–AM Spacecraft and the Spaceflight Tracking and Data Network (ICD–104)
PS20008617 19 January 1993	Propulsion Subsystem Performance Specification for the EOS–AM Spacecraft
Source:	Martin Marietta Astro Space P. O. Box 800 Princeton, NJ 08543–0800

2.2.2 Other Documents

PN20001412 12 May 1992	Contamination Control Plan for the EOS–AM Spacecraft (SEP–107)

20005387 02 December 1992	EOS–AM Configuration Management Plan (MD–104)
23001146	Configuration Management Requirements for Subcontractors
PN20005397 17 January 1992	EOS Performance Assurance Implementation Plan (PAIP) (PA–100)
PN20005404	Verification Plan for the EOS–AM Spacecraft (VRD–100)
PN20008664 30 September 1992	EOS–AM Comprehensive Test Plan, Thermal Control Subsystem Subset for the EOS–AM Spacecraft (VRD–105)
PN20005869A	Electromagnetic Compatibility (EMC) Control Plan for the EOS–AM Spacecraft (SEP–106)
PN20008660 28 September 1992	EOS–AM Spacecraft Alignment Plan (SEP–121)
20004280	Subcontractor Performance Assurance Requirements for the EOS Observatory Program
PS20001415 28 September 1992	Structures and Mechanisms Subsystem Specification for EOS–AM Spacecraft (SP–101)
PN20008655 26 October 1992	EOS–AM Software Management Plan
20001422 15 April 1993	EOS–AM Spacecraft Software Development Plan (MD–109)
20008633	Software Requirements for EOS–AM Subcontractors
Source:	Martin Marietta Astro Space P. O. Box 800 Princeton, NJ 08543–0800

(This page intentionally left blank.)

3 VERIFICATION PROCESS

3.1 General

The Verification Process is designed to demonstrate that all EOS Spacecraft elements will meet performance and interface requirements during the proposed EOS–AM mission. The EOS Verification Process shall wherever practical use the Protoflight Qualification concept where hardware shall serve the dual purposes of being used for qualification testing and for flight. In general, protoflight hardware shall be subjected to qualification environment test levels for acceptance durations and then be used for flight. All Spacecraft hardware must be qualified for the EOS–AM mission through analysis, inspection, demonstration, and either protoflight or Qualification Test Model (QTM) testing. Once qualified, any additional flight hardware (follow–on units) shall only undergo flight acceptance testing.

Through a combination of verification methods, the EOS Verification Program shall demonstrate that the Spacecraft and all its elements have met all of its allocated performance and interface requirements. The tests and analyses will encompass all expected environments including thermal vacuum, structural loads, vibroacoustic, mechanical shock, and pressure profile.

The above process is defined in the Verification Plan. The Requirements Verification Matrix in that document (also Appendix III in this document) defines the verification process to be used for each Spacecraft–level requirement. The plan describes the processes to be used to verify that the Spacecraft performance and interface requirements specified in the Contract End Item Specification (PS20005396) are met. The Flight Hardware Test Matrix identifies all tests to be performed on flight hardware, at all component– and higher levels, to verify that the given Spacecraft element meets its specified performance and interface requirements.

This document gives the generic verification requirements applying to all EOS–AM Spacecraft element verification activities identified in the Verification Plan. Specific elements may have additional requirements identified in lower level specifications. Those additional requirements shall be consistent with the generic requirements specified herein.

In order to ensure that the Spacecraft and its elements have met the electromagnetic compatibility requirements, a comprehensive EMC test program will be conducted in conjunction with the environmental testing specified herein. The specific details of the EMC testing are defined in the EOS Spacecraft EMC Control Plan (PN20005869) and its subtier documents.

3.2 Verification Methods

Methods used for the verification process shall consist of either analysis, inspection, demonstration, or test. In several cases, a combination of these methods will be employed.

All four methods are defined in Appendix II of this document. In many cases, analysis performed at one level of assembly will require review of test or inspection data from a lower assembly level. In addition, verification tests will generally require support analyses for the purposes of test requirement definition and test result interpretation.

3.3 Verification Hardware

A generic comparison of the environment levels and test durations for QTM, Protoflight, and Flight Acceptance testing to the predicted environment conditions is illustrated in Figures 2 and 3. Test levels for ETM and EDM hardware, when used for verification testing, are generally the same as those used for QTM hardware. In the case of protoflight hardware, test durations may be reduced. QTM, ETM, EDM, Protoflight, and Acceptance hardware are defined in Appendix II, and are discussed in the following sections.

3.3.1 Qualification Hardware

Qualification tests are formal, contractual confirmations that the design and manufacturing methods have resulted in hardware (and software) capable of meeting performance specification requirements. During qualification tests, the test item is subjected to environmental levels greater than those which the flight item shall experience during ground handling, transportation, storage, launch, powered flight, or on orbit. All qualification hardware shall be produced from the same drawings, using the same materials, tooling and manufacturing methods as those used to produce flight hardware.

For the EOS Program, there are two types of Qualification testing. These are: Protoflight and QTM testing. The primary difference between the types of tests is the duration of exposure to the relatively severe environmental conditions.

In vibration, for example, protoflight hardware shall receive qualification levels for flight (acceptance) durations. Qualification hardware will receive qualification levels for qualification durations. Whereas Protoflight hardware will be used for flight provided it passes qualification testing, QTM hardware will not be used for flight. Therefore, Protoflight hardware is flight hardware by form, fit, and function. QTM hardware shall be built to the same standards, with respect to the parameters which are critical to qualification, i.e. manufacturing processes and tolerances, electronic parts designation, materials used, etc. After a QTM has been qualified, subsequent hardware that is produced from that design shall be flight acceptance tested only.

3.3.1.1 Qualification Test Model (QTM)

QTM testing involves hardware of a new design without test or flight heritage. QTM hardware shall not be used for flight because the combined environmental levels and test durations are significantly more severe than those anticipated during ground, launch or orbital operations. This severe environmental exposure may produce deleterious effect on the subsequent performance or reliability of the QTM. Usually the first version of newly designed flight hardware, without flight or test heritage, is selected for QTM testing.

Table I is a list of QTM hardware. This hardware shall be subjected to QTM testing in accordance with Table XIII of Appendix III. Note that in some cases, qualification is performed using ETM or EDM hardware in a separate qualification test program. The qualification test requirements in these cases are unchanged. Use of ETM/EDM hardware in these applications requires GSFC approval. All other hardware shall be qualified by Protoflight testing.

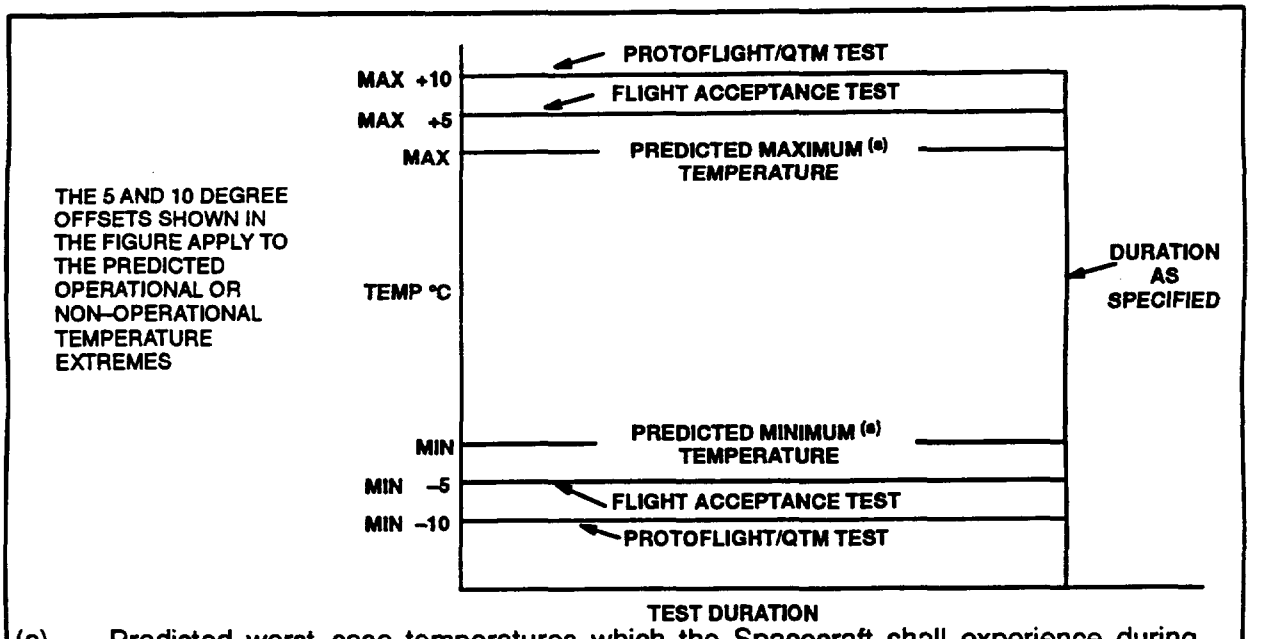

(a) Predicted worst–case temperatures which the Spacecraft shall experience during ground, launch, or orbital operations, as specified in GIS.

Figure 2. Comparison of Thermal Test Levels

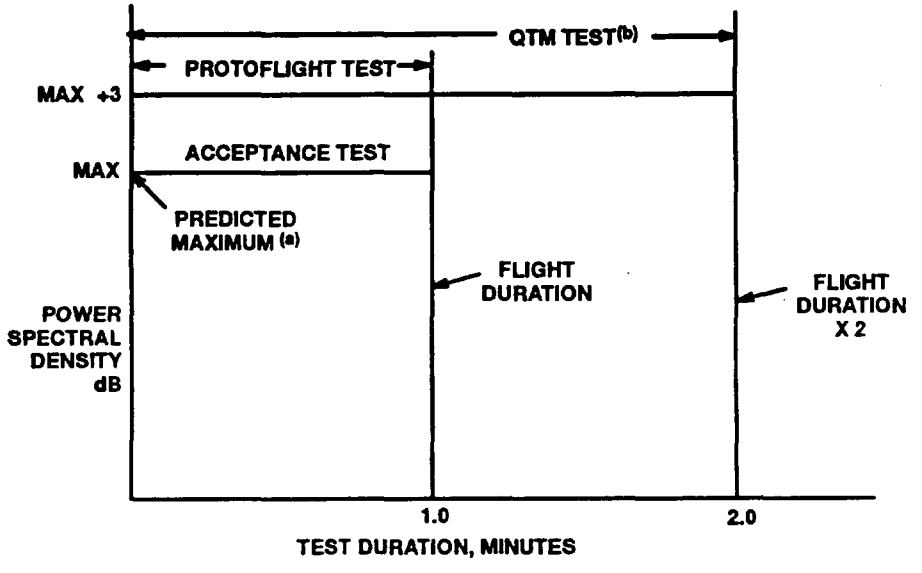

(a) Predicted worst–case vibro–acoustic levels which the Spacecraft shall experience during ground, launch, and orbital operations, as specified in GIS.

(b) QTM testing is for 2 minutes versus 1 minute for Protoflight and Acceptance.

Figure 3. Comparison of Vibroacoustic Test Levels and Durations

Table I. Hardware to be QTM Tested

Hardware Item	# of QTMs
Equipment Module Structural/Thermal Control System: [Flight–like EDM of Power EM]	1
Capillary Pumped Heat Transport System: (Flight–like EDM – similar model for life test)	1
Kinematic Mounts	1 set
Solar Array Drive (SAD)	
a. Flight–like EDM for life test	1
b. Full QTM for qualification testing	1
HGA Gimbal Drive (Flight–like EDM for life test)	1
Workhorse Battery Panels*	2 (1 of each type)
Battery Life Test Unit (7 cells) (Electrically Equivalent Only)	1
Heater Control Electronics	4 (1 of each type)
Solid State Recorder (EDM version of DCU and DMU)	1 each

*Only Hex Bay Battery Panel Assembly receives Thermal Vacuum Test

3.3.1.2 Protoflight Hardware

Protoflight hardware constitutes the first unit of a given design, or the first application of a design to a given mission, which is used to qualify that design to the intended mission and subsequently is used for flight. In general, the environmental levels to which Protoflight hardware is tested are the same as those used on QTM hardware, however, the duration of exposure is less; i.e., the same as for flight hardware durations (acceptance duration).

However, while both QTM and Protoflight hardware are newly designed, previous test performance, and/or orbital flight experience with qualified hardware of similar design precludes the necessity of exposing Protoflight hardware to the potentially harmful rigors of long duration environmental exposure involved in QTM testing. Therefore, unlike QTM hardware, Protoflight hardware may be used for flight once it has passed Protoflight qualification tests.

Protoflight hardware will undergo the tests indicated in Table XIII of Appendix III. The requirements for those tests are defined in the following sections.

3.3.2 Acceptance Hardware

Acceptance tests shall verify that subsystems, major assemblies, instruments, and components operate in accordance with the applicable performance specification(s) during powered flight and on–orbit operation. Subsystem/component Acceptance Tests shall be performed after unit

qualification, and shall demonstrate that the test item is ready for flight. In many instances, the test requirements defined for the qualification of flight hardware shall also apply to the Acceptance Tests, except for the environmental levels. All spare subsystems/components shall also be subjected to the Acceptance Test environments specified in the following sections.

3.4 Verification Documentation

The following documentation shall be generated in order to record the verification activities performed in preparation for the EOS–AM mission. Documentation requirements for items built by Martin Marietta Astro Space (Astro Space) and those built by its subcontractors are the same; however, the format of subcontractor–generated verification documents may be different than those presented herein as long as the same information is present.

3.4.1 Verification Reports

Upon completion of any verification activity at any level of hardware assembly, a Verification Report shall be generated in order to document the results of the verification activity. A blank Verification Report Form is shown in Figure 4. This form or equivalent shall be used to document how each requirement is verified including any special conditions, assumptions, or limitations. All requirements which are to be documented as verified by the report shall be clearly delineated. The report shall describe how the math models used were validated by test data and what were the significant results of any verification by analysis. All supporting documentation shall be attached to the report upon submission. Detailed test and analysis data shall be retained by the organization performing the verification, unless requested to do otherwise. All Verification Reports that are generated by Subcontractors shall be submitted to Astro Space for review prior to transmittal to NASA–GSFC by Astro Space.

3.4.2 Verification Test Procedures

Test procedures shall be developed in enough detail to cover all aspects of each verification test, including: test article configuration, test parameters with acceptable min/max limits, facility control measures, instrumentation, data collection, and reporting requirements. The test procedures shall also address what measures will be taken to maintain safety, control contamination and protect the test hardware from damage. Procedures for performance tests shall provide for real–time data display in a readily distinguishable format. Test predictions shall also be attached to the procedure documents. Pass–fail criteria and limits shall be determined prior to test procedure approval. Corrective action for all test failures, including retest requirements, shall be approved by the Failure Review Board in accordance with the Performance Assurance Implementation Plan (PN20005397) for testing at Astro Space, and the Subcontractor PAR (20004280) for testing at Subcontractor facilities, prior to final acceptance of the hardware.

Verification test procedures shall provide the following means of configuration control for the Unit Under Test (UUT):

a. Nomenclature and drawing/specification number of the assembly being tested shall be stated.

PERFORMANCE VERIFICATION DOCUMENTATION
Page ___ of ___

EOS OBSERVATORY VERIFICATION REPORT

ITEM _____

MANUFACTURER _____

PART NO. _____ SERIAL NO. _____

LEVEL OF ASSEMBLY: ☐ COMPONENT ☐ EM ☐ MAJOR ASSY.
☐ HOUSEKEEPING BUS ☐ SPACECRAFT

TYPE OF HARDWARE: ☐ QTM ☐ PROTOFLIGHT ☐ FLIGHT ☐ SPARE
☐ ENGINEERING

REQUIREMENT(S) VERIFIED: _____
(State requirement(s) verified and identify source)

VERIFICATION METHOD: ☐ ANALYSIS ☐ INSPECTION ☐ DEMONSTRATION ☐ TEST

TYPE TEST:

☐ COMPREHENSIVE PERFORMANCE
☐ MODAL SURVEY
☐ STRUCTURAL LOADS
☐ SINE VIBRATION
☐ RANDOM VIBRATION
☐ ACOUSTIC
☐ ELECTROMAGNETIC COMPATIBILITY
☐ ALIGNMENT
☐ FUNCTIONAL PERFORMANCE @ AMBIENT
☐ FUNCTIONAL PERFORMANCE @ TEMP.
☐ MECHANICAL SHOCK
☐ THERMAL BALANCE
☐ THERMAL VACUUM
☐ LEAKAGE
☐ MASS PROPERTIES
☐ TEMPERATURE CYCLE
☐ INTERFACE VERIFICATION
☐ OTHER (explain) _____

VERIFICATION SUMMARY: _____
(Summarize results of verification)

Figure 4. Verification Report Form

PERFORMANCE VERIFICATION DOCUMENTATION
Page ___ of ___

VERIFICATION REPORT (Continued)

VERIFICATION PROCEDURE NO. _____ REV. _____ DATE _____
☐ INITIAL TEST
☐ RETEST (☐ PARTIAL OR ☐ FULL; INITIAL TEST START DATE _____)

APPLICABLE TEST PLAN: _____
FACILITY DESCRIPTION: _____
LOCATION: _____
TEST LOG REFERENCE: _____

COMMENTS: _____
SIGNATURE: _____

DESIGN OR SYSTEMS ENGINEER: _____ DATE _____
TEST DIRECTOR OR TEST ENGINEER: _____ DATE _____
QUALITY ASSURANCE REPRESENTATIVE: _____ DATE _____

Date (add time for thermal tests)	Ambient Temp/ Humidity (°C, RH)	Note beginning and end of actual activity, deviations from the planned procedure, and discrepancies in test performance.	Failure Report Number and Date (if applicable)
		(use additional paper as required)	

The activities covered by these reports include analyses, tests and measurements performed for the purpose of verifying the flightworthiness of hardware at the applicable level of assembly.

Material necessary to clarify this report including copies of Design Notes or test/inspection data shall be attached. Test logs and data should be retained by those responsible for the test item in accordance with the provisions of the Performance Assurance Implementation Plan.

This report does not replace the need for maintaining complete logs, records, etc.; it is intended to document the implementation of the verification program and to provide a minimum amount of information as to the performance of the test item.

Figure 4. Verification Report Form (Continued)

b. If the assembly is within a manufacturing process, the manufacturing planning step number at which the test is to be performed shall be stated. As often the test procedure will be written prior to the manufacturing planning, "TBD" may be used provided the planning step is added prior to closeout of the test procedure.

c. Test readiness review (TRR) requirements, if any, shall be specified in the procedure. Tests which require test readiness reviews are specified in Sections 4 through 7 of this document. Where special TRR parameters which are not specified in the Performance Assurance Implementation Plan are required for the particular test, these requirements shall be stated in the procedure.

3.4.3 Activity Log Book

A daily log shall be kept by the Astro Space I&T organization and all subcontractors throughout the qualification and flight acceptance testing and shall contain all test hardware identification, procedure descriptions and a record of all pertinent events during the test program. A similar log shall be kept by the Manufacturing Test, Inspection, and Environmental Test organizations throughout the component and assembly level verification activities.

3.5 Special Procedures

3.5.1 Deviations

Deviations from the requirements of this specification shall be avoided where possible. For deviations to internal requirements which do not violate contract requirements, the following procedure shall be followed: Recommended deviations shall be submitted to the Martin Marietta Astro Space EOS SE&I organization with sufficient engineering information to justify the deviation. Furthermore, all lower level performance specifications or applicable test specifications shall contain a matrix which lists deviations from this document. Under these conditions, if the rationale is found to be acceptable, the lower level procedure will be approved, thus approving the deviation.

Deviations from this document which violate contract requirements shall be submitted by the Astro Space EOS PMO to GSFC in accordance with the requirements of the Performance Assurance Implementation Plan. If deviations to the verification requirements are approved, these changes shall then be incorporated into the applicable procedure and other test documentation.

3.5.2 Unscheduled Activities

Astro Space shall prepare a document that shall describe procedures for controlling, documenting and approving all activities not part of an approved verification procedure. All Subcontractors are required to prepare a similar document which shall be submitted to Astro Space for approval. Included shall be actions for dealing with unscheduled problems during a test and potentially hazardous conditions to test personnel. These procedures shall institute controls which will prevent accident or injury or Spacecraft hardware damage. The procedures shall also utilize real-time decision making mechanisms to expedite suspension or resumption of testing after a failure which will minimize the impact on testing.

These Procedures for Control of Unscheduled Activities During Integration and Verification Testing shall be in accordance with requirements given in this document and the Performance Assurance Implementation Plan (PN20005397) or applicable Subcontractor Performance Assurance Requirements(20004280).

3.5.3 Anomalies, Failures, and Retest

An anomaly is a deviation from predicted behavior during a verification process. Anomalies are attributable to product failures or to verification process deficiencies such as improper test equipment, test procedure errors, or human error.

A failure is a departure from specification requirements that is discovered in the functioning or operation of verification hardware or software. For all design related failures the retests required will be determined on an individual case basis considering the specific nature of the failure and the corrective action to be taken.

A designated Government representative shall participate in the resolution of anomalies and failures, as part of the Failure Review Board, per the Performance Assurance Implementation Plan and the Procedure for Control of Unscheduled Activities During Integration and Verification Testing. FRB approval shall be required on the Automated Discrepancy Report (ADR) disposition for retest of design related failures.

If configuration changes are required they shall be in accordance with the Configuration Management Plan (PN20005387) and/or Configuration Management Requirements for Subcontractors (23001146). For the closeout of each failure, corrective actions shall be taken, and necessary design changes shall be verified in test. These corrective actions shall be performed in a manner which minimizes the impact upon other subsystems, major assemblies, and components.

Following retest, testing will resume where it was interrupted in accordance with retest logic detailed below.

Any anomaly which is caused by test procedure, test operator, or test equipment failure shall be documented, and evaluated by the cognizant component, subsystem, or systems engineer. If the anomaly is determined to have a potential for damage to flight hardware it shall be classified as a "failure" and documented on ADR or equivalent subcontractor form. An analysis of subsequent test data shall be performed prior to ADR closure to verify that no damage has been done to the flight hardware.

3.5.3.1 Component Anomalies and Failures

Component anomalies shall be documented on ADR or equivalent subcontractor form, and investigated by the Quality Assurance Engineer responsible for that ADR in accordance with the Performance Assurance Implementation Plan and the Procedure for Control of Unscheduled Activities during Integration and Verification testing, and Subcontractor PAR, for Spacecraft hardware. If the anomaly is determined to be test or inspection related, processing shall be resumed after the verification process is corrected, after proper disposition and approval. Retest or reinspection shall be required for those verification steps which are determined to have been compromised by the anomaly.

Component failures may be caused by design deficiencies or random failures. Random failures are attributable defects in manufacture, installation, workmanship, or handling. Design related failures are treated as discussed in Section 3.5.3.

If the component failures are determined to be random, the failed hardware will be repaired or reworked. In addition, surrounding or interfacing components will be evaluated/analyzed, if necessary, to assure that the failure did not propagate and damage them. Then, depending on where the failure occurred in the test cycle, the degree of retesting will be determined. The degree of retesting will be in accordance with Table II. Deviations from the retest logic in that table will require FRB approval on the ADR disposition.

3.5.3.2 EM and Other Major Assembly Anomalies and Failures

Equipment module and major assembly anomalies shall be documented on a problem report (PR) and investigated in accordance with the Performance Assurance Implementation Plan and the Procedure for Control of Unscheduled Activities during Integration and Verification testing. If the anomaly is determined to be test or inspection related, processing shall be resumed after the verification process is corrected, after proper disposition and approval. Retest or reinspection shall be required for those verification steps which are determined to have been compromised by the anomaly. If the anomaly is determined to be a failure, it shall be documented on ADR.

EM and other Major Assembly failures usually occur from either interface incompatibilities or from component failures as described above. Interface incompatibilities will be investigated and determined to be due to one of the following reasons:

a. Interface Design Deficiency (mechanical, thermal, electrical, harness)

b. Harness Manufacturing Error or Damage

c. Assembly/Installation Error or Damage

Component failures shall be treated as specified in Section 3.5.3.1. After retest, reintegration of the the component into the EM or Major Assembly will be required. Reintegration interface verification test requirements are specified in Section 5.

Failures due to interface design deficiencies shall require FRB approval of retest operations as discussed in Section 3.5.3.

Failures due to manufacturing or installation errors shall be treated as follows. After repair of the failed hardware, the degree of retesting will be determined by where the failure occurred in the test cycle. The degree of retesting for failures caused by random component failures shall be in accordance with Table III. The degree of retesting for failures caused by random installation or EM assembly errors shall be in accordance with Table IV. Deviations from the retest logic in those tables shall require FRB approval on the ADR disposition.

In addition to the above retesting, if a failure occurs to the GNC Sensor EM which requires removal of any of the sensor components (IRU, TAM, SSST) from the optical bench, an alignment test shall be performed upon reinstallation of the affected component to verify the remount placement.

Table II. Retest Logic for Component Random Failures

Failure Occurrence	Retest (after all rework)
Initial Functional	a. Repeat initial functional b. Continue testing
Comprehensive Performance	a. Perform initial functional to verify repair b. Repeat comprehensive performance c. Continue testing
EMC Test	a. Perform initial functional to verify repair b. Repeat EMC test c. Continue testing
Strength Test	a. FRB approval required prior to retest
During Vibration or Acoustic	a. Perform initial functional to verify repair b. Repeat axis of vibration where failure occurred or repeat acoustic c. Continue test cycle
Post Vib/Acoustic Functional	a. Perform initial functional test to verify repair b. Perform single–axis acceptance level vibration along most sensitive axis relative to failed component c. Repeat post–vib functional test d. Continue test cycle
Thermal Cycle/Vacuum	a. Perform initial functional test to verify repair b. Perform single–axis acceptance level vibration along most sensitive axis c. Repeat post–vib functional test d. Perform two powered thermal cycles. Operating parameters shall be monitored whenever the component is powered. A CPT* shall be performed during transitions and plateaus of one full thermal cycle. e. Continue test cycle
During or After Final CPT * *Subset of CPT which can be performed within the Thermal Cycle vacuum or ambient pressure environment*	a. Perform initial functional test to verify repair b. Perform single–axis acceptance level vibration along most sensitive axis c Repeat post–vib functional test d. Perform two powered thermal cycles. Operating parameters shall be monitored whenever the component is powered. A CPT* shall be performed during transitions and plateaus of one full thermal cycle. e. Repeat final CPT f. Continue test cycle

Table III. Retest Logic for EM or Other Major Assembly Failure Caused by Component Random Failure

Failure Occurrence	Retest (after component rework)
Electrical Integration	a. Rework and retest component per Table II b. Repeat electrical interface verification tests involving component (including module–to–structure grounding check) c. Continue test cycle
Initial Functional	a. Rework and retest component per Table II b. Repeat electrical interface verification tests involving component c. Repeat initial functional test d. Continue test cycle
Comprehensive Performance	a. Rework and retest component per Table II b. Repeat electrical interface verification tests involving component c. Repeat comprehensive performance test d. Continue test cycle
During Vibration/Acoustic	a. Rework and retest component per Table II b. Repeat electrical interface verification tests involving component c. Repeat initial functional test d. Repeat failed vib axis or acoustic test e. Perform acceptance level random vib along most sensitive axis (if not covered in e.) f. Continue test cycle
Post–Vib/Acoustic CPT	a. Rework and retest component per Table II b. Repeat electrical interface verification tests involving component c. Repeat initial functional test d. Perform acceptance level random vib along most sensitive axis e. Repeat CPT f. Continue test cycle
Thermal Cycle	a. Rework and retest component per Table II b. Repeat electrical interface verification tests involving component c. Repeat initial functional test d. Perform acceptance level random vib along most sensitive axis e. Repeat CPT f. Resume thermal cycle test remaining cycles + repeat of CPT at plateaus, if already performed) g. Continue test cycle
Final CPT	a. Rework and retest component per Table II b. Repeat electrical interface verification tests involving component c. Repeat initial functional test d. Perform acceptance level vibration test along most sensitive axis e. Repeat CPT f. Perform abbrev T/C test (1 cycle) g. Repeat CPT h. Continue test cycle

Table IV. Retest Logic for EM or Other Major Assembly Failure Caused by Random Installation or Assembly Error

Failure Occurrence	Retest (after reinstallation/reassembly)
Electrical Integration	a. Inspect installation and repeat grounding check* b. Repeat electrical interface verification tests involving component(s) removed c. Continue test cycle
Initial Functional Test	a. Inspect installation and repeat grounding check* b. Repeat initial functional test c. Continue test cycle
Comprehensive Performance	a. Inspect installation and repeat grounding check* b. Repeat CPT c. Continue test cycle
During Vibration/Acoustic	a. Inspect installation and repeat grounding check* b. Repeat initial functional test c. Repeat failed vib axis or acoustic test d. Perform acceptance level random vib along most sensitive axis (if not covered in e) e Continue test cycle
Post–Vib/Acoustic CPT	a. Inspect installation and repeat grounding check* b. Repeat initial functional test c. Perform acceptance level random vib (most sensitive axis) d. Repeat CPT e. Continue test cycle
Thermal Cycle Test	a. Inspect installation and repeat grounding check* b. Repeat initial functional test c. Perform acceptance level random vib (most sensitive axis) d. Repeat CPT e. Resume thermal cycle test remaining cycles + repeat of CPT at plateaus, if already performed) f. Continue test cycle
During or After Final CPT * *Module–to–structure grounding check*	a. Inspect installation and repeat grounding check* b. Repeat initial functional test c Perform acceptance level random vib (most sensitive axis) d. Repeat CPT e. Perform abbrev acceptance T/C test (1 cycle) f. Repeat CPT g. Continue test cycle

If an EM or major assembly failure is caused by random harness construction or installation errors, the degree of retesting shall depend upon the nature of the defect, subject to the following criteria: Defects which can be safely reworked in place shall be retested in accordance with Table V. Defects which require removal of the harness to rework shall be retested in accordance with Table VI. Deviations from the retest logic in those tables shall require FRB approval on the ADR disposition.

Table V. Retest Logic for Spacecraft Bus, EM, or Other Major Assembly Failure Caused by Random Harness Failure (harness reworked in place)

Failure Occurrence	Retest (after reinstallation/reassembly)
Electrical Integration	a. Inspect rework for workmanship errors. b. Perform isolation/continuity test through reworked connectors and/or lines (harness demated from any connectors interfacing with reworked lines) c. Repeat electrical interface verification tests involving reworked harness d. Continue test cycle
Any Subsequent Functional Test	a. Inspect rework for workmanship errors. b. Perform isolation/continuity test through reworked connectors and/or lines (harness demated from any connectors interfacing with reworked lines) c. Repeat electrical interface verification tests involving reworked harness d. Repeat functional test in which failure was detected e. Continue test cycle where interrupted

Table VI. Retest Logic for Spacecraft Bus, EM, or Other Major Assembly Failure Caused by Random Harness Failure (harness removed for rework)

Failure Occurrence	Retest (after reinstallation/reassembly)
Any Failure	a. Inspect rework for workmanship errors. b. Repeat harness acceptance testing (Hipot/Meggar, Insulation Resistance) c. Install harness on EM or Spacecraft d. Inspect installation e. Continue retest per Table V starting at step c.

3.5.3.3 Instrument and Spacecraft I&T Anomalies and Failures

Instrument and Spacecraft I&T anomalies shall be documented first on Problem Reports and dispositioned in accordance with the Performance Assurance Implementation Plan and the Procedure for Control of Unscheduled Activities during Integration and Verification testing. If the anomaly is determined to be test or inspection related, processing shall be resumed after the verification process is corrected, after proper disposition and approval. Retest or reinspection shall be required for those verification steps which are determined to have been compromised by the anomaly.

If the anomaly is determined to be a flight hardware failure, an ADR will be written and dispositioned by the Failure Review Board in accordance with the Performance Assurance Implementation Plan. As with EMs and Major Assemblies, failures during instrument or Spacecraft I&T will usually occur from either interface incompatibilities or from component failures as described in the previous section. Design related failures shall be retested as discussed in Section 3.5.3.

Failures to housekeeping equipment due to manufacturing or installation errors shall be treated as follows: After repair of the failed hardware, the degree of retesting will be depend upon where the failure occurred in the test cycle. Failure data and proposed remedies shall be reviewed by the FRB in order to determine what retesting will be required. The degree of retesting will be in accordance with Table VII. Deviations from the retest logic in that table will require FRB approval on the ADR disposition.

Table VII. Retest Logic for Instrument/Spacecraft I&T Failures Caused by Random Component, EM, or Other Major Assembly Failure (Non–Harness Housekeeping Equipment)

Failure Occurrence	Retest
Electrical Integration	a. Retest component per Table II (Table III if an EM–mounted component) b. Perform re–integration IVT of component or EM c. Continue test cycle
S/S Initial Functional	a. Retest component per Table II (Table III if an EM–mounted component) b. Perform re–integration IVT of component or EM c. Repeat initial functional test d. Continue test cycle
Pre–T/V CPT, B/L, EMC Tests	a. Retest component per Table II (Table III if an EM–mounted component) b. Perform re–integration IVT of component or EM c. Repeat subsystem B/L test d. Continue test cycle
T/V or Subsequent	a. GSFC approval required

If a Spacecraft or Spacecraft Bus failure is caused by random harness construction or installation errors, the degree of retesting shall depend upon the nature of the defect, subject to the following criteria. Defects which can be safely reworked in place shall be retested in accordance with Table V. Defects which require removal of the harness to rework shall be retested in accordance with Table VI. Deviations from the retest logic in those tables shall require FRB approval on the ADR disposition.

In the event of a failure during testing of a flight instrument, the testing shall be halted, a Problem Report written (immediately), and the cognizant GSFC representative shall be contacted before proceeding. All instrument retest operations during I&T shall require GSFC approval.

Instrument or housekeeping equipment failures during I&T which require removal of an instrument, major assembly, or EM from the Spacecraft shall also require reintegration of the affected hardware upon reinstallation. Interface verification test requirements for reintegration are specified in Section 7.

3.5.3.4 Failure Review Board (FRB)

A Failure Review Board (FRB) shall be operated in accordance with either the Performance Assurance Implementation Plan (PN20005397) or the subcontractor PAR (20004280). This FRB shall control final acceptance of all hardware for which failures have been recorded.

3.5.3.5 Failure Reporting

Failures which occur at Astro Space facilities shall be reported in accordance with the PAIP (PN20005397). Those which occur at Subcontractor facilities shall be reported in accordance with the Subcontractor PAR (20004280). In the event of any failure, the cognizant government representative shall be contacted.

3.5.3.5.1 Failure Reports

The format for failure reports is specified in either PN20005397 or 20004280 (for subcontracted hardware). All reference data for failure reports shall be maintained on file and will be available upon request.

Corrective action should be stipulated as soon as the cause of failure is accurately determined. Results of failure analysis which show rationale for the corrective action proposed shall be submitted to NASA. Failure reports will be submitted to NASA in accordance with the PAIP.

3.5.3.5.2 Status Summaries

The Performance Assurance Status Report shall contain a section for a listing of all the failure reports. This listing shall be updated monthly to show new open failure reports as well as recently closed reports. A file shall be maintained including failure analysis and Failure Review Board (FRB) activities.

3.6 General Test and Inspection Requirements

This section defines the general requirements for the environmental tests identified in the Verification Plan, which are required to verify compliance of the Spacecraft, its major assemblies, subsystems, and components to the design requirements specified in the Contract End Item Specification (PS20005396) and General Interface Specification (GIS, number IS20008501), and

the lower level subsystem and component specifications. Instruments are included at the top Spacecraft assembly level and, as such, are part of the Spacecraft verification program. However, individual instrument verification is not covered in this document. Lower–level component and equipment module verification described in this document does not apply to instruments.

A summary of the environmental testing which will be conducted as part of the EOS–AM Spacecraft verification program is shown in Table XIII of Appendix III.

Flight hardware shall be qualified in accordance with the environmental test parameters described in this specification and Section 4 of the pertinent major assembly or component specification. Upon qualification, all identical (replicate) flight hardware shall be subjected to Flight Acceptance Testing in accordance with the environmental test program outlined in this specification and Section 4 of the pertinent hardware specification.

Environmental test levels defined herein take into consideration launch vehicle interfaces specified in the Launch Vehicle IRD, IS20008503.

3.6.1 Preparation for Test Program

Hardware submitted for testing shall be identical to flight hardware in all respects which may affect test results, and complete with protective covering, potting, thermal insulation, shock mounting and/or any other means of attenuating environmental rigors expected during launch, ascent, and on–orbit operations. Any appendage or attachment which may render the test hardware more vulnerable under environmental exposure shall be included or simulated during tests.

Hardware undergoing environmental exposure in the qualification or acceptance test program shall be operated in its most stressful condition expected for the portion of the flight which is being simulated by environmental exposure.

3.6.2 Test Sequence

The environmental testing sequence of the Spacecraft, its equipment modules, major assemblies, and components shall be in accordance with the flow diagrams in Appendix IV and/or any elaborations contained within Section 4 of the applicable element (component, EM, subsystem, major assembly) specification.

3.6.3 Test Evaluation

Whenever applicable, test evaluations shall include the following:

a. A comparison of predicted versus actual test performance

b. Necessary adjustments to analytical models

c. Logging of identified trend parameters (see Section 3.6.3.1)

3.6.3.1 Trend Parameters

Measurable parameters which relate to performance stability shall be evaluated at all levels of assembly, starting with component protoflight or acceptance testing, through Spacecraft testing.

The monitoring shall be accomplished within the normal test framework. A system shall be established for recording and analyzing the parameters as well as any changes from the first observed value, even if the levels are within specified limits.

Typical parameters might be: power supply output voltages with minimum, nominal, and maximum bus voltage; input current as a function of bus voltage; ripple measurements; RF output power; or other key characterization parameters. A general list of trend parameters to be followed will be contained in the Verification Plan. Detailed listings shall be included in the Spacecraft, subsystem, and component specifications.

3.6.4 Test Facilities

The facilities and equipment used in conducting tests shall be capable of producing and maintaining the required test conditions while the test hardware is in either an operating or non–operating mode, and shall not induce failure or cause contamination.

Ambient conditions in the test facilities used for the checkout of test hardware before and after environmental exposure shall be maintained in accordance with the parameters specified in the GIS. After delivery to Astro Space I&T, exposed instruments or components which are particulate–sensitive shall be maintained in a Class 10,000 environment (including thermal vacuum test chamber). Cleanliness during all I&T activities shall be maintained in accordance with the EOS Spacecraft Contamination Control Plan (PN20001412). Cleaning of all components prior to integration into EM or higher assembly levels shall be as specified in the Contamination Control Plan.

If the test hardware is sealed or otherwise insensitive to variations in temperature and humidity, operational checkout at ambient room conditions shall be acceptable.

Certain facilities housing the Spacecraft or components during I&T may not meet all of the requirements specified in the GIS, IS20008501. In those cases bagging, purging, vacuum, protective covers, or other protective measures shall be used to compensate for the environmental deficiencies of those facilities. Those methods shall meet the requirements specified in the Contamination Control Plan as well as the conditions in the GIS.

3.6.5 Calibration

All inspection, measuring and test equipment shall be calibrated at scheduled intervals against certified standards in accordance with PN20005397 (EOS Performance Assurance Implementation Plan) for verification activities at Astro Space facilities and the launch site, and 20004280 (EOS Subcontractor Performance Assurance Requirements [PAR]) for verification activities at subcontractor facilities.

3.6.6 Tolerances

Table VIII indicates the maximum allowable tolerances for test conditions. Where required for element–specific verification activities, tighter tolerances shall be specified in the element specification.

Table VIII. Maximum Allowable Test Tolerances

Parameter	Tolerance
Temperature °C	±2
±2Relative Humidity, %	±5
Vibration (input)	
Sinusoidal (Amplitude), %	±10
Sinusoidal (Frequency), %	±2 or 1 Hz, whichever is greater
Random (Overall RMS Level), %	±10
Random (Power Spectral Density), dB	20–50 Hz ± 1.5 dB 500–2000 Hz ± 3.0dB
Mass	
Spacecraft, %	±0.25
Components (All levels of assembly)	±0.1 lb or ±0.5%, whichever is greater
Center of Mass	
Spacecraft, inches	±0.25
Components, inches	±0.10
Inertia	
Products, %	±5[a]
Moments, %	±5
Time Duration	Exposure duration shall be at least for the time stated, unless otherwise stated
Shock	
Response Spectrum, %	+25, –10
Time History, %	±10
Acoustic, dB[b] (1/3 Octave Band Tolerance)	
Overall	±1
F ≤ 40 Hz center. freq.	+3, –6
40 < F < 3150 Hz	+3, –3
F ≥ 3150 Hz center freq.	+3, –6
Electromagnetic Compatibility	
Voltage Magnitude, %	±5 (of peak)
Current Magnitude, %	±5 (of peak)
RF Amplitude, dB	±2
Frequency, %	±2
Distance, %	±5[c]

(a) of associated moments (by analysis)
(b) Sound Pressure Levels, dB ref: 20mN/M²
(c) ±5 % of specified distance or ±1 in, whichever is greater

Table VIII. Maximum Allowable Test Tolerances (Continued)

Loads	
Steady State Accel., %	±5
Static, %	±5
Pressure, %	
760 to 100 torr	±5
100 to 1 torr	±10
1 to 10^{-3} torr	±25
$<10^{-3}$ torr	±80
Magnetic Properties	
Mapping Distance, inches	±1
Displacement of Assy. CG from Rotation Axis, inches	±2
Vertical Displacement of Single Probe Centerline from CG of Assembly, inches	±2
Mapping Turntable Angular Displacement, deg	±3
Magnetic Field Strength, Repeatability of Magnetic Measurements (Short Term)	±5 % or ±2 nT, whichever is greater
Demagnetizing and Magnetizing Field Level, % of nominal	±5
Antenna Pattern Determ., dB	±0.3

3.6.7 Vibration and Acoustic Testing

The requirements stated herein shall apply to all vibration and acoustic tests performed on EOS–AM Spacecraft elements. Additional requirements for the component, major assembly, EM, and Spacecraft assembly levels are defined in Sections 4, 5, 6, and 7 of this specification, and in Section 4 of the element specifications.

3.6.7.1 General

Vibration tests demonstrate the ability of the component/EM/major assembly to withstand and/or operate in the vibration environment which is predicted for the hardware during launch and ascent.

Vibration test levels generally simulate the maximum expected launch/ascent loads for acceptance testing, with a suitable margin added for qualification or protoflight testing. Random vibration test levels are designed to include the effect of acoustic inputs as well as vibration transmitted through the structure. All test levels are discussed in greater detail in Sections 4, 5, 6, and 7.

As with vibration testing, acoustic acceptance test levels encompass the maximum expected launch environment. A suitable margin is added for qualification and protoflight test levels. All test levels are discussed in greater detail in Sections 5, 6, and 7.

Functional tests shall be performed on the test items before and after exposure to vibration and acoustic testing.

3.6.7.2 Instrumentation

The following requirements for instrumentation during vibration and testing shall be met.

3.6.7.2.1 Accelerometers

The transducers shall be located so that the signal output accurately defines the motion of the surface under evaluation. Either of the two following methods shall be used for mounting the accelerometers onto the test item:

a. Direct attachment by threaded fasteners to the surface being monitored, using torque values specified by the manufacturer. This method is mandatory for mounting control accelerometers.

b. Direct bonding of the accelerometer to the surface being monitored using an approved, rigid, high modulus adhesive.

3.6.7.2.2 Signal Conditioner

The signal conditioner shall prepare the output of the accelerometer in a form suitable for display or recording. The input and output impedance of the signal conditioner shall match those of the accelerometer and the recording equipment.

3.6.7.2.3 Recorders

X–Y recorders shall require a converter to change the AC vibration signal to a DC voltage for Y–axis display. This display shall be either linear or logarithmic and the recorder shall have adequate response and damping characteristics in order to provide a chart display without excessive overshooting or lag in the system.

Recording oscillographs may be used for direct readout of AC accelerometers as well as from tape playback. Galvanometers used in recording oscillographs shall be capable of flat response to the maximum frequency expected during the test. Proper damping circuits shall be used, when required, with the recording oscillograph. Magnetic tape recorders shall exhibit a flat frequency response sufficient to record and reproduce the frequency spectrum of the test.

3.6.7.3 Measurement of Vibration

The input vibration shall be measured at the test item/test fixture interface. (Acoustic input shall be as defined in the specific test procedure.) Power spectral density levels specified in each frequency band and the overall (g_{RMS}) shall be within the tolerances specified in Table VIII. An X–Y plot of the power spectral density versus frequency in each axis shall be generated. A tape recording of the data, including the control accelerometer signal, shall be required.

The spectrum analyzer shall have the following characteristics:

a. Real time, parallel filter; filter bandwidths shall not exceed 25 cps below 1200 Hz or 100 cps above 1200 Hz.

b. The random vibration control equalizer shall have filter roll–off characteristics above 2000 Hz of 40 dB per octave or greater.

3.6.7.4 Test Set–Up

The test item shall be attached to the test equipment by a rigid fixture. A fixture survey shall be conducted using a dummy–mass test item which simulates the interface, weight, and center of gravity (CG) of the actual test item.

3.6.7.5 Test

The test item shall be operated in modes consistent with the mission phases during which the Spacecraft may experience the environmental (vibration) conditions being simulated by the test. The operations during test need not be comprehensive, but must include all operations (e.g., those involving mechanical motions/position changes) which are likely to affect test results. For vibration tests, the test item shall be vibrated in three orthogonal axes, one of which shall be parallel to the predicted major vibrational axis.

3.6.8 Thermal Vacuum (T/V) Testing

3.6.8.1 General

T/V testing shall verify the capability of flight hardware to meet specification requirements, while subjected to worst–case orbital T/V conditions. Components requiring thermal vacuum testing are listed in Table IX. Qualification hardware shall be tested to demonstrate its capability to operate at temperatures 10°C beyond the predicted on–orbit operational extremes, and survive 10°C beyond the predicted non–operational extremes. The predicted on–orbit operational and non–operational extremes are listed in the GIS. Deviations must be worked out on a case–by–case basis, as defined in par. 3.5.1.

Table IX. Flight Components Requiring Thermal–Vacuum Testing

Subsystem	Acronym	Title*
C&DH	SCC	Spacecraft Control Computer
	DMU	Data Memory Unit (Part of Solid–State Recorder)
	DCU	Data Control Unit (Part of Solid–State Recorder)
	SFE	Science Formatting Equipment
	CTIU	Command/Telemetry Interface Unit
	BDU, Housekeeping	Bus Data Unit, Housekeeping
	BDU, Instrument	Bus Data Unit, Instrument

Table IX. Flight Components Requiring Thermal–Vacuum Testing (Continued)

Subsystem	Acronym	Title*
COMM	SBT	S–Band Transponder
	MO	Master Oscillator
	KSA MOD	K–Band Single Access Modulator
	DAS XMIT	Direct Access System Transmitter
	DAS MOD	Direct Access System Modulator
	DAS UP/FS	DAS Upconverter Frequency Source
	XBECA	DAS Antenna
	OMNI	Omni Antenna
	SBIU	S–Band Interface Unit
	HGA	High Gain Antenna Assembly
	–	HGA Upconverter
	–	HGA Transmitter (TWTA)
	–	HGA Gimbal Assembly
	–	HGA Antenna Controller
GN&C	ACE	Attitude Control Electronics
	RWA	Reaction Wheel Assembly
	SSST	Solid State Star Tracker
	IRU	Inertial Reference Unit
	ESA (ESH, ESE)	Earth Sensor Assembly (Earth Sensor Head, Earth Sensor Electronics)
Power	EPC	Electrical Power Conditioner
	ADE	Array Drive Electronics
	SAD	Solar Array Drive
	SSU	Sequential Shunt Unit
	BATT	Battery (Hex Bay Battery Panel Assembly)
	BPC	Battery Power Conditioner
	PSU	Power Switching Unit
	PDU	Power Distribution Unit
Propulsion	PMEA	Propulsion Module Electrical Assembly
Thermal	HCE	Heater Control Electronics

* Except for RF components of the Communications subsystem, this list applies only to the QTM or Protoflight unit of each item listed. Subsequent units may receive temperature cycling at ambient pressure. All designated RF units require thermal vacuum testing.

3.6.8.2 Measurement and Instrumentation

Temperature sensors shall be located in positions which closely coincide with the nodal breakdown of the analytical thermal model. These locations shall also be identified in pertinent test procedures. Thermocouples and precision thermistors will be used to measure the temperature of the test item.

Typical components and major assemblies consist of numerous piece parts which generally operate at different temperatures in an orbital environment. For the purposes of this specification, the reference temperature for thermal stabilization shall be as follows:

a. For an element that is primarily coupled to its environment by thermal radiation, the reference temperature shall be the average temperature of the most massive structural member within the element.

b. For an element that is primarily coupled to its environment by thermal conduction, the reference temperature shall be the average temperature of the conduction heat sink used in the test.

3.6.8.3 Precautions

The rate of test item temperature change during T/V testing shall not exceed the allowable temperature change rate for that item. Rates used in T/V testing shall approximate the maximum values predicted for mission operation. These thermal transition rates shall be as specified in Sections 4, 5, 6, and 7.

3.6.8.3.1 Contamination

As stated in Section 3.6.4 particulate contamination within the T/V chamber shall satisfy FED–STD–209 requirements for Class 10,000 particle count. All T/V set–up and teardown procedures shall conform to requirements in the EOS Spacecraft Contamination Control Plan (PN20001412). Witness mirrors shall be installed near the areas of expected deposition and critical cleanliness areas to verify compliance to the deposition budgets specified in the Contamination Control Plan. Identification of condensible contaminants shall also be performed via cold–finger test and analysis, as described in the Contamination Control Plan. Additional requirements for monitoring contamination–critical assemblies are specified in Sections 4, 5, 6, and 7.

3.6.8.3.2 Electrical Isolation

The test item shall be electrically isolated from the vacuum chamber to prevent short–circuiting which may result in damage to the item.

3.6.8.3.3 Electrical Discharge Check

The instrumented test item shall be placed in the T/V chamber and an operational check shall be performed prior to full chamber evacuation. With the test item in its operational status for launch, the chamber shall then be evacuated to less than 7.5×10^{-3} torr to simulate the pressure profile of

ELV–powered flight. If the test item is to be powered during ascent (see Table XII in Section 4), then the item shall be powered on and monitored for electrical discharge during chamber evacuation, down to 10^{-3} torr. After evacuation is complete, telemetry checks shall be performed to verify that the item has not been damaged by electrical discharge. Items not powered during launch shall be off during chamber pumpdown. Additional functional tests required for this verification shall be specified in the element specification and in Sections 4, 5, 6, and 7 of this document.

3.6.8.4 Test Set–up

The test item shall be installed in the test chamber and instrumented in preparation for exposure to thermal vacuum conditions. Structural and thermal considerations shall determine the test configuration which properly supports and yet minimizes its influence on the temperature distribution of the test item.

Provisions shall be made to assure that specified environmental test limits will not be exceeded during the test.

3.6.8.5 Test Item Operations

The test item shall be operated during thermal cycling and its performance shall be monitored. A Comprehensive Performance Test shall also be performed at least at one high and one low temperature plateau, to the extent possible within the thermal vacuum chamber. This environmental performance test shall be as specified in Sections 4 through 7.

3.6.8.6 Thermal Cycling

Specific components which must receive thermal–vacuum cycling at the component level are shown in Table IX. Immediately following the electrical discharge check, described in Section 3.6.8.3.3, the T/V chamber shall be evacuated to a pressure of less than 1×10^{-5} torr and maintained for the remainder of T/V testing. At this point, thermal cycling shall begin.

(In order for a component to be treated as not requiring thermal–vacuum testing, analysis shall be provided by the component manufacturer which shows that the component does not have any of the T/V–critical attributes listed in Table X. The analysis shall be submitted as a verification report no later than component CDR. (Table X, Thermal–Vacuum Criteria Guidelines, provides some of the guidelines which were used in developing Table IX, which is the governing table.)

Table X. Thermal Vacuum Criteria Guidelines

a. High Voltage (>200 V)
b. High Frequency (>100 MHz)
c. Internal Radiative Thermally–coupled
d. Components which are exposed to 120 volts and are to be powered through launch (Protoflight or QTM only)
e. Mechanisms which operate throughout the life of the mission
f. New Designs (To be judged on a case–by–case basis)

Criteria for determination of thermal cycle profiles and soak durations shall be as follows.

a. A qualification or protoflight "thermal cycle" consists of a transition from ambient temperature to the upper qualification limit, stabilization at that limit as specified in Section 3.6.8.2, followed by a transition to the lower qualification limit, stabilization at that limit as specified in Section 3.6.8.2, followed by a transition to ambient, performed in a vacuum environment of less than 1×10^{-5} torr. A "temperature cycle" consists of a similar transition of item bulk temperature in an ambient pressure environment. Upper and lower qualification temperatures are defined in Paragraph 3.6.8.1. See Definitions, Appendix II.

b. Thermal transition rates shall not exceed those specified in Section 3.6.8.3.

c. All Spacecraft components shall be subjected to a minimum of 12 thermal cycles, of which at least four shall be at the Spacecraft level (as defined in Section 7). Component and/or assembly level tests shall provide the remaining required cycles.

d. All Spacecraft components shall be subjected to a minimum of 96 hours of thermal soak at each temperature extreme, of which at least 64 hours shall be at the Spacecraft level (as defined in Section 7). Component and/or assembly level tests shall provide the remaining required hours.

e. The components listed in Table IX, Components Requiring Thermal–Vacuum Testing, shall receive eight thermal–vacuum cycles at the component level. Components not listed in Table IX shall receive eight temperature cycles at ambient pressure, although vacuum would be acceptable. All flight components will receive four thermal–vacuum cycles at the Spacecraft level.

The sequences employed during thermal cycling in thermal–vacuum shall be as specified in Sections 4, 5, 6, and 7 of this document. Upon completion of the required number of thermal cycles, the temperature and pressure of the chamber shall be returned to ambient conditions.

3.6.8.7 Thermal Vacuum Acceptance Test

For flight Acceptance testing, the requirements and constraints described above for Thermal Vacuum testing shall apply, except that thermal stabilization of the test item at hot and cold plateaus shall be at 5°C above or below the predicted on–orbit temperature extremes.

3.6.9 EMC Tests

The performance of components, EMs, major assemblies, and the Spacecraft shall be verified for electromagnetic compatibility by testing in accordance with the EOS Spacecraft EMC Control Plan (PN20005869). This testing shall demonstrate that the Spacecraft and its elements shall not generate EMI which could affect itself or the safety and operation of the launch vehicle. The testing shall also demonstrate that the Spacecraft and its elements are not susceptible to electromagnetic emissions that are either self–generated or generated by other sources.

Component and major assembly level EMC/EMI tests shall meet the requirements specified in the EMC Control Plan. No EMC/EMI tests shall be performed on equipment modules. Spacecraft level EMC/EMI tests shall meet the requirements of Section 7 of this specification and the EMC Control Plan.

3.6.10 Life Verification Requirements

The Verification Plan contains a list of hardware that shall undergo life testing as defined in the appropriate component/major assembly specification

These items shall be included in the limited life list in accordance with the PAIP (PN20005397). As other items are identified to have limited life, they shall be added to the list. Items which should be verified for useful life expectancy include: mechanisms which move repetitively, electronics which suffer significant performance degradation over time, and items which have known wearout processes.

The Failure Modes, Effects, and Criticality Analysis (FMECA) for each item shall identify all life–related failure modes. These modes shall include both those resulting in complete functional failure and those resulting in performance degradation below specifications.

A heritage analysis shall then be performed for the limited life elements which determine the failure modes. These elements shall be identified along with their heritage to previously life–qualified items. If the analysis shows the previously qualified life meets the mission life requirement, the element shall not require testing. The heritage analysis shall be documented in a verification report.

The remaining non–qualified limited life elements shall be modeled in a preliminary life analysis. This analysis shall provide a life prediction for the component based on the anticipated mission environment, and shall be used to determine the test parameters (environment, equipment, test article) used in the life test design. The analysis shall be documented in a verification report. The life test design shall be documented in a life test plan and submitted to GSFC for approval.

Life test hardware shall be engineering (EDM or ETM) hardware incorporating all the limited life elements identified in the preliminary life analysis. The hardware shall be built using flight materials and processes.

Life test environments shall simulate the mission thermal environment determined in the preliminary life analysis to within the tolerances specified in Table VIII. Where testing cannot be performed in this environment, or acceleration of the test is required, justification shall be provided in the life test plan and approved by GSFC.

Functional testing during the life test shall include an initial Comprehensive Performance Test as defined in Section 4. Throughout the imposition of the life test environment, periodic tests shall be performed to trend those performance parameters which are influenced by the life related failure modes. At the end of the life test, a final Comprehensive Performance Test shall be performed.

The final life analysis shall be documented in a verification report. This analysis shall incorporate life test data and provide a final life prediction for the component.

3.6.11 Electrical Interface Verification Tests

Before the integration of a major assembly, component or subsystem into the next higher hardware assembly level, electrical interface verification tests shall be performed to verify that all interface signals meet performance requirements.

Prior to mating with other hardware, electrical harnessing shall also be tested to verify proper characteristics such as: routing of electrical signals, impedance, isolation, high potential breakdown resistance, and overall workmanship.

Electrical IVT requirements are based on the interface definitions provided in the General Interface Specification. These test requirements are specified in Sections 4, 5, 6, and 7.

3.6.12 Mass Properties

The weight of components, major assemblies, and the Spacecraft shall be measured. The required accuracy of reported mass properties shall be as specified in Table VIII. Weighing shall be classified as an inspection, and in order to meet the requirements of Table VIII, the accuracy of the measuring equipment shall meet the system error specifications identified in the Performance Assurance Implementation Plan, Section 8.17.3.

Center of mass and moments and products of inertia shall be calculated, with additional measurements required if analysis or other considerations so dictate. Measurements shall be made at the beginning and/or at the end of the test program to show conformance with design values.

The component/major assembly shall be in its proper flight configuration, or as close as possible, for mass properties measurements. The mass properties for each test item shall be reported in a manner which can be readily transcribed in mass property control systems.

3.6.13 General Inspection Requirements

Inspections used to verify EOS–AM performance or interface requirements shall conform to the measurement tolerances identified in the Performance Assurance Implementation Plan, Section 8.17.3, or the applicable subcontractor PAR.

4 COMPONENT VERIFICATION

4.1 General

This section shall specify the requirements for verification methods to be used that are common to all hardware at the component level of assembly.

4.2 Analysis

The following sections define the analyses at the component level that shall be conducted to verify the performance of the EOS Spacecraft components.

4.2.1 Mechanical

Stress analysis shall be performed on all components in order to verify that positive margins of safety exist for all load cases. The analysis shall demonstrate that positive margins of safety exist for all load cases. The analysis shall be performed in accordance with the structural design criteria specified in Section 4.9 of the General Interface Specification. These criteria shall indicate the necessary design margins over the predicted limit loads shown in that specification. Structural elements which do not meet the no–test criteria specified therein shall be subjected to strength testing.

Kinematic analyses shall be performed on all components with moving or deployable mechanisms. These analyses must ensure that each mechanism can perform satisfactorily with adequate margin under worst–case conditions; that clearances are satisfactory in both stowed and any operational configuration; and that all mechanical elements can withstand the worst–case loads that may be encountered. The stresses determined by these analyses shall be compared to the allowable stresses for all moving parts, both for flight and ground test operations. The results of these analyses shall be used to guide ground test activities to ensure that the safe operating conditions for deployable mechanisms shall not be exceeded. A verification report shall be issued listing all one–G test limitations for moving or deployable mechanisms.

Analysis shall also be conducted to verify that the component housing will maintain a positive margin at loads equal to those induced by the maximum expected pressure differential during ascent to orbit, with appropriate factors of safety, as defined in the GIS.

4.2.2 Mass Properties

All components and higher levels of assembly shall be weighed to the accuracy stated in Table VIII. The requirement for additional mass properties measurements will be determined on a case–by–case basis.

Analysis shall be performed in order to supplement weight measurement in defining critical mass properties of components. A mass property database shall be maintained to provide accurate weight estimates of components. This database shall be used to support mechanical analysis activities.

4.2.3 Thermal

Detailed analytical models of the component shall be developed and used to ensure the component can endure the temperature conditions it will encounter during the life of the component. These conditions are specified in the General Interface Specification and in the test details provided in this document. Analysis shall also be performed to verify that the component can endure the humidity conditions it will encounter during all aspects of manufacture, storage, transportation, launch, and mission life.

Thermal modelling shall predict the worst case maximum (and/or minimum, if applicable) temperatures of all critical elements within the component. All Thermal Math Models (TMMs) shall include sufficient detail to fully characterize the temperatures and temperature gradients of all critical elements within the component during the anticipated mission conditions. These models shall be updated during the design and test phases, if required.

4.2.3.1 Components Requiring Detailed Modelling and Reporting

This section describes the thermal analysis requirements for components which are not required to provide TRASYS or SINDA thermal models, as described in par 6.2.3.

Thermal analysis and report requirements for electronic boxes associated with Spacecraft bus functions are described below. (These requirements also apply to equipment modules, Section 5.2.3.)

A detailed thermal analysis, down to the piece–part level, shall be performed to determine the highest part temperatures when the component is operating under the maximum temperature condition specified for the mission. A thermal analysis verification report shall be written to describe the analysis, and the following items shall be included in the report as a minimum effort:

a. Statement of the thermal design condition (the thermal environment and the electrical operating mode set forth in the component specification that results in worst–case stress on the parts).

b. Statement of the acceptance criteria for all part operating temperatures set forth in the component specification.

c. Description of the cooling (or heating) technique(s) and the approaches taken to perform the analysis. This includes: heat sources, heat sinks, environmental influences, modes of heat transfer, analysis methods, assumptions made, references cited, etc.

d. Pictures, sketches, drawings, etc., of the component and the thermal model showing the location of heat sources, heat sinks, nodes, etc.

e. Description of the computer programs or the analysis tools/techniques used to perform the analysis.

f. Table(s) listing the thermal model node numbers, node temperatures, node powers, and thermal conductance (or resistance) network. This could be portions of the computer input and/or output files.

g. Materials and properties used in the analysis.

h. Sample calculations of temperatures, conductances (resistances), power dissipations, etc.

i. Results table showing part mode number, part type, generic part number, schematic identification, power dissipation, surface–to–case resistance (if applicable), and surface temperature. Surface temperature is defined as the part hot–spot (i.e., junction) temperature. A suggested format is shown in Table XI.

j. Total power dissipation of each assembly within the component and the total power dissipation of the component.

k. Recommendations to solve cooling (or heating) problems if they exist or changes that might improve the reliability of the component.

l. Statement of conclusion assessing a favorable or harmful outcome as predicted by the analysis.

Table XI. Suggested Table – Thermal Parameters Predicted for (Component Name)

Part Node Number	Part Type	Generic Part Number	Schematic Identification	Power Dissipation	Surface–to–Case Resistance* (C/W)	Surface Temperature*
1	capacitor	M39014	C8	0.0	–	86
2	resistor	RWR55	R1	[illegible]	–	98
3	diode	1N6392	CR1	1.5	25.0	113
4	transistor	NE700[illegible]	Q[illegible]	[illegible]55	90.0	[illegible] @
5	IC	[illegible]4F1127	U[illegible]	[illegible].75	[illegible]	117
[illegible]	transforme[illegible]	[illegible]45–501	[illegible]	[illegible]	1.5	120 @
[illegible]	inductor	[illegible]505	[illegible]1	5.5	1.25	112
•	•		•	•	•	•
•	•	•	•	•	•	•
•	•	•	•	•	•	•
309	IC	54LS200	U117	1.05	35.0	109
Total Power Dissipation = 54.925 W						

Notes: * "Surface" is defined as the part hot spot
@ Exceeds the temperature derating

SAMPLE

4.2.4 Electrical

Analysis of electrical component performance shall be as specified in each individual component performance specification. Verification of component electrical performance shall be accomplished by performance testing during environmental exposure. Performance parameters which cannot be verified by component level testing shall be so designated in Section 4 of the component specification. A verification report shall be submitted upon completion of the higher level test or analyses which are used to verify the remaining component level requirements.

4.2.5 Single Event Upset (SEU)

An analysis shall be performed for SEU effects, depending on the Linear Energy Transfer threshold (LET_{th}) of each semiconductor device, for the environments described below.

If the LET_{th} is less than 10 Mev cm^2 mg^{-1}, the environment to be assessed shall include cosmic rays, solar flares, and trapped protons.

If the LET_{th} is between 10 and 100 Mev cm^2 mg^{-1}, the environment to be assessed shall include cosmic rays.

If the LET_{th} is greater than 100 Mev cm^2 mg^{-1}, no analysis is required. The device is considered to be SEU immune.

4.3 Inspections

Inspections to be performed on components as part of the verification process shall be specified in the applicable component performance specification. Measurement accuracies and calibration requirements for these inspections shall be as specified in the Performance Assurance Implementation Plan, or the subcontractor PAR.

Non–destructive test methods such as dye penetrant inspections and radiography may be required to supplement visual and dimensional inspections. These methods shall meet the inspection requirements specified in the Performance Assurance Implementation Plan, or the subcontractor PAR. The component specification shall in Section 4 define any requirements for non–destructive tests.

4.4 Environmental Test Sequence

A typical component verification test flow is depicted in Figure 9, Appendix IV. The tests to be performed for each component are defined in Appendix III. Component testing shall be performed in this sequence wherever possible. Deviations from this sequence shall be as defined in par. 3.5.1.

4.4.1 Trend Parameters

Measurable parameters which relate to performance stability shall be evaluated at the component level. See Section 3.6.3.1 for detailed requirements.

4.4.2 Electrical Function

Component electrical function tests shall include the following tests:

a. Functional tests used to verify operability after assembly, rework, or handling operations.

b. Comprehensive performance tests used to monitor trends of performance parameters and verify performance requirements including total power required for operation.

c. Environmental performance tests consisting of that subset of the CPT which can be performed within the thermal or EMC test environments.

Performance Tests shall be performed at key points before, during and after the environmental portions of Qualification and Acceptance Testing of flight hardware to confirm that the hardware has not suffered damage as a result of environmental exposure. These tests shall include the application of expected voltages, impedances, frequencies, pulses and waveforms at the electrical and communication interfaces of the test item. Electrical continuity and performance, response time, and other relative checks shall be performed.

4.4.2.1 Functional Test

A Functional Test shall verify the correct electrical/mechanical response from the test item in each of its operational modes. End–to–end evaluations of communications, clock, power, and other signals shall be verified. Functional Tests shall be used in cases where a Comprehensive Performance Test is not warranted or impractical. These uses shall be as defined in Appendix III, Appendix IV, Section 4 of the component specification, and the retest determination tables within this document. In addition, component functional tests may be required by disposition of ADRs.

4.4.2.2 Comprehensive Performance Test

The Comprehensive Performance Test (CPT) shall be a detailed verification that the test item meets performance specification requirements. The CPT shall be used to verify satisfactory performance in all operational and contingency modes within practical limits of cost, schedule, and environmental simulation capabilities. The CPT shall also include the following parameters:

a. The operation of all redundant circuitry shall be verified.

b. All command and data paths to and from the component shall be verified.

c. Values for trended performance parameters shall be evaluated for both prime and redundant hardware.

d. Each performance requirement for the component listed as verified by component level test in Section 4 of the component specification shall be addressed.

e. The total power required for all operational modes shall be measured and verified against requirements.

The position of Comprehensive Performance Tests in a typical component verification sequence can be seen in Appendix IV. The initial CPT shall be used as a baseline for comparison against all subsequent CPTs.

4.4.2.3 Environmental Performance Test

Performance tests during thermal testing shall be equal to the CPT wherever possible. In some cases deviations from the CPT shall be required for one of the following purposes:

a. Test equipment required for the CPT cannot be used within the environmental facility. In these cases a verification report shall be prepared documenting the elements of the CPT which cannot be performed and assessing the risks.

b. Performance data is only valid within the thermal vacuum environment. In these cases a verification report shall be prepared explaining how the remaining tests shall be used to monitor trends of performance data over the EMC/EMI and mechanical environments.

Performance tests during component EMC/EMI testing shall consist of the following:

a. A susceptible mode shall be defined during which the component's performance shall be monitored for susceptibility testing. This mode shall include all elements of the CPT for which EMC susceptibility can influence performance.

b. A noisy mode shall be defined in which the operation of the component results in worst cases emissions. Separate noisy modes may be required for radiated and conducted emissions tests.

Performance tests during vibration or acoustic tests apply only to components which are to be powered during launch. The component shall be powered and monitored in the launch mode, and performance requirements applicable to that mode shall be monitored and verified.

4.4.3 EMC Tests

The performance of the test item shall be verified for electromagnetic compatibility in accordance with the requirements of the EOS Spacecraft EMC Control Plan (PN20005869).

During these tests the component shall be operated in the susceptible or noisy mode as required for susceptibility or emissions testing.

4.4.4 Mechanical Testing

Components shall be subjected to the mechanical test environments identified herein. The mounting of the components shall duplicate the final equipment mounting configuration. During the test, the component shall be operated in the same manner as during the launch phase and monitored for malfunction in accordance with requirements specified in Section 4 of the component specification. (Components which are powered on during launch are listed in Table XII. They must be powered during vibration and acoustic testing.) At the conclusion of the test, the component shall be visually inspected to determine if it has suffered any deleterious effects due to the mechanical testing. In the case of structural components, additional non–destructive inspections may be required. The component shall then be operated to verify operation in accordance with requirements specified in the component test procedure.

Table XII. Components Which Are Powered On at Launch

Subsystem	Acronym	Title
C&DH	DCU	Data Control Unit, (Part of SSR)
	SCC	Spacecraft Controls Computer
	CTIU	Command/Telemetry Interface Unit
	BDU(H)	Bus Data Unit (Housekeeping)
	BDU(I)	Bus Data Unit (Instrument)
COMM	SBT	S–Band Transponder
	MO	Master Oscillator
GN&C	FSS	Fine Sun Sensor
	IRU	Inertial Reference Unit
	ACE	Attitude Control Electronics
	TAM	Three–Axis Magnetometer
	MTR	Magnetic Torque Rod
	RWA	Reaction Wheel Assembly
	ESH, ESE	Earth Sensor Head, Earth Sensor Electronics
	SSST	Solid State Star Tracker
Power	ADE	Array Drive Electronics
	EPC	Electrical Power Conditioner
	SSU	Sequential Shunt Unit
	PDU	Power Distribution Unit
	BATT	Battery (Hex Bay Battery Panel Assembly and Power Module Battery Panel Assembly)
	BPC	Battery Power Conditioner
	PSU	Power Switching Unit
	FDB	Fuse Distribution Box
Thermal	HCE	Heater Control Electronics
Propulsion	PMEA	Propulsion Module Electronics Assembly
	–	Catalyst Bed Heaters

4.4.4.1 Resonant Frequency Check/Signature Test (Low Level Sine Sweep)

For both tests described below, the input levels will be determined on a case–by–case basis.

a. **Fixtures.** Prior to use, or attachment of test articles, vibration fixtures shall be subjected to a three–axis sine vibration survey from 5–2000 Hz, to verify that resonant frequencies are sufficiently above the test frequency range.

b. **Flight Components.** The following requirement applies to the QTM and all flight units of each component:

After attachment to the vibration fixture, and prior to (and following) Random Vibration Testing (in each of three axes), the component shall be subjected to a low level sine vibration survey (from 5–2000 Hz), to verify that resonant frequencies are above 100 Hz, and to establish component modal characteristics, in order to verify that no resonant frequency shifts occurred as a result of structural damage resulting from the test.

4.4.4.2 Random Vibration

Random vibration shall be performed on each component to verify that the component will survive the launch environment, and to demonstrate acceptable workmanship. The component shall be tested in each of three mutually perpendicular axes.

Components powered during launch (Table XII) shall be operated during vibration.

Qualification and protoflight components shall be tested to random vibration levels which are 3 dB higher than the predicted flight exposure, defined in the individual component specification. Repeat Acceptance units shall be tested at the predicted flight load levels listed in the component specification. See Figure 5.

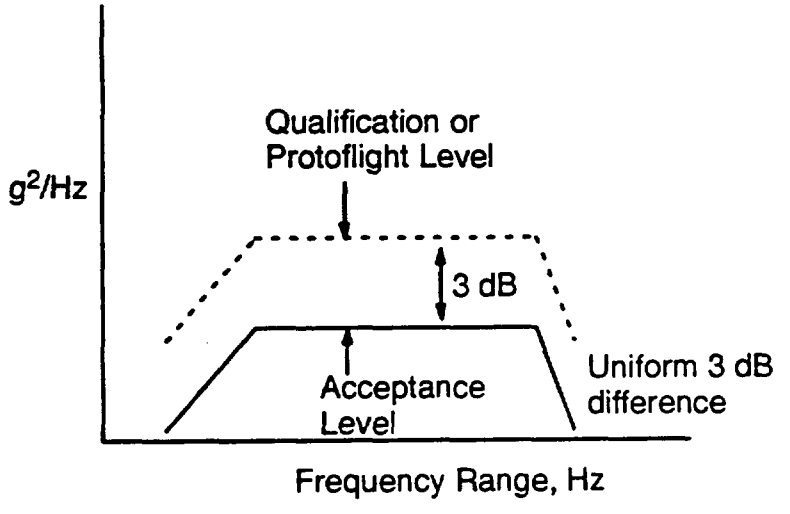

Figure 5. Random Vibration Loads

Test durations are as follows:

a. Qualification items – Two minutes for each of three axes.

b. Protoflight items – One minute for each of three axes.

c. Acceptance Items – One minute for each of three axes

4.4.4.3 Acoustics

Acoustic testing shall be performed on components which have low mass density and very large surface areas as specified in the Verification plan. Box components which house printed circuit boards are assumed to be insensitive to direct acoustic loading, therefore, they shall be verified via random vibration testing. Acoustic test levels for Acceptance testing are equal to the maximum expected levels specified in the General Interface Specification. Qualification/Protoflight acoustic test levels are, in general, 3 dB above the Acceptance levels across the full spectrum.

The test duration for Acceptance or Protoflight is one minute, and the Qualification test duration is two minutes.

Components powered during launch (Table XII) shall be operated during acoustics exposure according to the requirements of paragraph 4.4.2.3.

4.4.4.4 Pyro Shock

Components shall be capable of surviving the pyro shock environment induced by the launch vehicle separation system and/or appendage deployment systems. The first unit of all components shall receive shock testing unless it can be proven by analysis, heritage, etc., that the component is definitely not sensitive to a shock environment at the required level, which is 1.4 times the maximum expected flight level. Shock flight levels are defined in the indivudual component specifications.

Subsequent components of the same design do not require shock testing.

Components to be shock tested shall be mounted through the normal mounting points onto either a rigid fixture or a dynamically similar structure simulating the component attach points (preferred method). The test spectrum shall be applied via the use of a synthesized shock transient waveform generated by an electrodynamic shaker system. The amplitude requirement is met in both directions (plus and minus) along a given axis in a single application so that only six applications are required (two times along each orthogonal axis). The damage potential of the synthesized waveform and the flight transient are the same when the shock response spectrum of each is equal and the frequency components are applied simultaneously. The test shock waveform shall be applied and measured at the interface of the hardware being tested and the fixture.

A triaxial accelerometer mounted to the structure shall be used to measure the response spectrum in each of the three orthogonal axes.

4.4.4.5 Strength Test

Strength testing shall be performed on all components not meeting the "no–test" structural design margins defined in the General Interface Specification. Strength testing shall use one of the following three methods to apply the test load to the anticipated load paths within the component:

a. Static Load Test

b. Acceleration Test

c. Sine Burst Test

The three methods are described in the following paragraphs.

4.4.4.5.1 Sine Burst (Strength Test)

Sine burst tests may be conducted to determine if a structural component is capable of withstanding the acceleration forces associated with launch. The accelerations shall be applied using a shaker to impose a steady state sinusoidal vibration at a single frequency below the resonant frequency of the component. The frequency of excitation shall be the lowest frequency achievable within the test equipment limitations which will produce the specified accelerations. Resonant frequencies shall be reviewed and verified by low level sine sweep signature tests as required to assure that overtest is not imposed.

Protoflight components to be Sine Burst tested shall achieve peak accelerations of 1.25 times the predicted flight load. Accelerometers shall be attached as described in Section 3.6.7 and used to verify response. Repeat components shall be Acceptance tested. The Acceptance test load is equal to the predicted flight load. For all components, the test duration is five cycles, minimum.

If Sine Burst testing is required, pre–and post–environmental visual inspections and non–destructive tests (i.e. signature tests), as well as the functional tests required by Section 3.6 of this document and Section 4 of the applicable element specification, shall be used to verify the component has survived the imposed loading. Flight hardware which is to be powered during launch shall be placed in its launch mode at this time and telemetry shall be monitored and compared to predicted values.

4.4.4.5.2 Static Load

Structural components for which loads are applied at unique mechanical interfaces, such as kinematic mounts, shall undergo static load testing, as shown in Table XIII of Appendix III. This test shall be used in lieu of sine burst or acceleration testing in these cases to minimize fatigue cycles on the flight hardware. Protoflight components shall be subjected to 1.25 times the design limit loads defined in the General Interface Specification. Repeat components shall be Acceptance tested. The Acceptance test load is equal to the design limit load defined in the GIS. Strain gauges shall be used where required to verify structural materials have not yielded. Subsequent fracture inspections shall also be used where required to verify the component has survived the imposed loading.

4.4.4.5.3 Acceleration

Acceleration tests may be used in place of sine burst or static load tests to impose structural loads onto components. If testing is required, pre–and post–environmental visual inspections and non–destructive tests, as well as the functional tests required by Section 3.6 of this document and Section 4 of the applicable element specification, shall be used to verify the component has survived the imposed loading.

4.4.4.5.4 Test Setup

Flight hardware shall be rigidly attached to the mounting fixture. The mounting shall duplicate the component flight installation to the extent practicable. For acceleration tests, the fixture shall be capable of attachment to a centrifuge large enough to prevent an acceleration variation exceeding ±10% across the test item.

4.4.4.5.5 Test

Test levels shall be sufficient to load the component to 1.25 times the predicted flight loads in each of three mutually perpendicular axes. For the sine burst test, the duration shall be five cycles at maximum level. For the static load and acceleration tests, the time at full load shall be minimized. After reaching the required level, the required measurements shall be taken and the load removed.

Flight hardware which is to be powered during launch shall be placed in its launch mode for the test duration and telemetry shall be monitored and compared to predicted values.

4.4.5 Thermal Vacuum

Thermal Vacuum testing shall verify the capability of the component to meet performance specification requirements while exposed to worst–case orbital T/V conditions. The general requirements of T/V testing specified in Section 3.6.8 shall apply to component testing.

The component shall be subjected to thermal cycling as specified in Appendix III and the component's performance specification. Vacuum–sensitive components shall be subjected to thermal vacuum testing at the component level, to the requirements specified herein. As noted in Section 3.6.8.6, analysis must be provided by the component manufacturer which shows that any component treated as non–T/V critical does not have any of the T/V–critical attributes listed in Table X. A minimum set of components which shall be tested in vacuum are shown in Table IX.

All components shall be subjected to at least eight temperature or thermal cycles before being integrated to the Spacecraft. At the Spacecraft level, the components will be subjected to at least four cycles, which amounts to a minimum total of twelve thermal cycles.

4.4.5.1 Measurement and Instrumentation

The general requirements of Section 3.6.8 apply to components.

4.4.5.2 Precautions

The requirements of Section 3.6.8.3 and subparagraphs apply to components.

4.4.5.2.1 Contamination

Components which have sensitive viewing or measuring openings must be kept clean of particles and other depositions, as defined in the Contamination Control Plan. Components which are sensitive to non–volatile residue (NVR) include:

a. Solid State Star Tracker (SSST)

b. Earth Sensor Assembly (ESA)

Prior to testing or exposure of the above–listed components in any environment (including test chambers), a contamination survey shall be conducted which includes all internal test equipment. Temperature chambers shall be taken to the temperatures used in the test. Witness plates shall be located where the sensor surfaces will be, to verify that the deposition rates for NVR or particle deposition do not exceed the allowable levels specified in the Contamination Control Plan. During the actual test, witness plates shall be used to verify that the depositions did not exceed allowable levels.

4.4.5.2.2 Electrical Discharge Check

Components which are exposed to 120 volts and are powered during launch (See Table XII) shall be checked for electrical discharge during vacuum pumpdown. Test details shall be provided in the individual performance specifications.

4.4.5.3 Test Set–up

The general requirements of Section 3.6.8.4 apply to components.

The component shall be mounted onto a fixture which thermally simulates the actual mounting condition to the maximum extent practical. Conductive and thermal capacitance material properties, as well as mounting methods and torque values, shall emulate the flight mounting conditions to the extent practical.

4.4.5.4 Test Item Operations

Prior to the thermal vacuum test, a comprehensive performance test shall be performed to the requirements specified in Section 4.4.2.

Functional operations during the test include the following:

a. If required in Section 4.4.5.2.2, the component shall be powered in launch mode during chamber pump–down and telemetry shall be evaluated to verify no degradation from electrical discharge effects until the vacuum reaches a level of 10^{-3} torr.

b. Environmental performance tests as defined in Section 4.4.2.3 shall be performed at the hot and cold operating temperature plateaus. These plateaus are defined in the next section.

c. High– and low–voltage turn–on tests shall be performed at the hot and cold operating plateaus. These tests may be combined with the environmental performance test. The high and low voltages are defined as the maximum and minimum bus or EPC voltages which the component will operate to on orbit. These voltages shall be defined in the General Interface Specification and the component specifications. The component shall be turned on and telemetry shall be checked to verify functionality.

d. Components which are designated as sensitive to on–orbit temperature change rates shall undergo a performance test during a controlled temperature transition cycle as discussed in the next section.

Following the thermal vacuum test, a comprehensive performance test shall be performed to the requirements specified in Section 4.4.2.

4.4.5.5 Thermal Cycling

Immediately following the electrical discharge check described in Sections 4.4.5.2.2 and 4.4.5.4.a., the T/V chamber shall be evacuated to a pressure of less than 1×10^{-5} torr and maintained for the remainder of the test. At this point, thermal cycling shall begin.

The following sequence shall be employed during thermal cycling (see Figure 6):

Note: In the following description, it is assumed that the component will be subjected to Protoflight testing. As such, Qualification test levels are 10°C beyond the predicted operating temperature range, and the non–operating survival levels are 10°C beyond the predicted non–operating temperature range. For Acceptance testing, the operational test levels are 5°C beyond the predicted operating range, and the survival levels are 5°C beyond the predicted non–operating temperature range. For all testing, the duration of the upper and lower temperature plateaus shall be at least four hours.

a. **(Cycle No. 1) Non–Operating Temperature Limits (Survival Temperatures)**—The temperature of the chamber shall be controlled to cause one thermal cycle as defined in Section 3.6.8.6, with the following provisions employed to test the predicted non–operational limits of the component:

1. During this temperature cycle, the component shall be powered on (except where indicated) and its operating parameters monitored continuously, but performance testing and mode changes are not required. The rate of temperature change shall be at least 10°C per hour, which corresponds to the worst–case on–orbit change rate.

2. When the component temperature reaches the upper qualification operating limit, it shall be powered off, and the chamber shall be controlled to drive the test article to 10°C above its predicted upper non–operating orbital extreme temperature if this is above the operational limit. This plateau shall be maintained for four hours, after which the test article temperature shall be driven back down to the operating limit. The component shall then be powered on.

3. When the component temperature reaches the lower qualification level operating limit, it shall be powered off, and the chamber shall be controlled to drive the test article to 10°C below its predicted lower non–operating orbital extreme temperature if this is below the operational limit. The component shall then be powered on. (At no time shall the component be operated if the temperature is beyond the qualification temperature range.)

(Replace with fig6)

Figure 6. Component Thermal Cycle Test Profile

b. **(Cycles No. 2 and 3) Operating Performance, Qualification Test Levels**—During these temperature cycles, the component shall be operating and subjected to performance testing. The high and low temperature plateaus shall be at the upper and lower qualification levels, respectively. The rate of temperature change shall be at least 10°C per hour, which corresponds to the worst–case on–orbit change rate.

c. **(Cycle No. 4) Operating Performance, Qualification Test Levels, Hot/Cold Start**—During this temperature cycle, the component shall be operating and subjected to performance testing. The high and low temperature plateaus shall be at the upper and lower qualification levels, respectively. The temperature of the chamber shall be increased to cause the component to reach the qualification level high temperature. Hot–start capability shall then be verified by turning the component off and then verifying proper start–up. The component shall again be turned off and allowed to stabilize at the upper qualification temperature level. The turn–on test shall be repeated, and the environmental performance test at the high plateau shall then be completed. Do not drive the component temperature beyond the upper qualification level while powered, or permit the non–operating temperature to exceed the survival limit.

   The temperature of the chamber shall then be decreased to cause the component to reach the qualification level low temperature. Cold–start capability shall then be verified by turning the component off and then verifying proper start–up. The component shall again be turned off and allowed to stabilize at the lower qualification temperature level. The turn–on test shall be repeated, and the environmental performance test at the low plateau shall then be completed. Do not attempt to operate the component at a temperature which is beyond the lower qualification level, nor permit the temperature to fall below the lower survival temperature.

d. **(Cycles No. 5, 6, and 7) Non–Performance Tested, Qualification Test Levels**—The component shall be powered on during these cycles, and its operating parameters monitored continuously, but performance testing and mode changes are not required. There is no requirement for rate of temperature change. The upper and lower temperature levels shall be the Qualification test levels.

e. **(Cycle 8) (Same as Cycles 2 and 3) Operating Performance, Qualification Test Levels**—During this temperature cycle, the component shall be operating and subjected to performance testing. The high and low temperature plateaus shall be at the upper and lower qualification levels, respectively. The rate of temperature change shall be at least 10°C per hour, which corresponds to the worst–case on–orbit change rate.

f. **Contamination Prevention Half–Cycle**—For contamination prevention, an additional half–cycle shall be performed. The component shall be powered on, and its operating parameters monitored continuously, but performance testing and mode changes are not required. During this half–cycle, the chamber temperature shall be increased to stabilize the component at 35°C. The component shall be maintained at this temperature for two hours. The chamber shall then be brought to ambient temperature. During the cool–down period, the component temperature must be kept higher than the chamber

wall temperature to prevent condensation on the component. The temperature change rate shall not exceed the worst–case on–orbit temperature change rate (10°C per hour) during this half–cycle.

Figure 6 illustrates the required thermal cycling sequence.

4.4.5.6 Qualification

For qualification (QTM and Protoflight) testing, thermal cycling shall subject the component to temperatures 10°C above and below the predicted on–orbit temperature extremes listed in GIS for the component. Deviations shall be worked out on a case–by–case basis, and defined in the component specification.

4.4.5.7 Acceptance

After the component has successfully completed qualification testing, all subsequent units shall be acceptance tested. For acceptance testing, thermal cycling shall subject the component to temperatures 5°C above and below the predicted on–orbit temperature extremes for the component.

4.4.6 Temperature Cycle

Components which are not vacuum–critical can be subjected to temperature cycle testing at ambient pressure in lieu of thermal vacuum testing. Tables IX and XIII indicate which components require T/V and which components can be temperature cycled at ambient pressure.

4.4.6.1 Measurement and Instrumentation

The thermal vacuum requirements of Section 4.4.5 apply to temperature cycle tests except as modified herein.

As thermal predictions will generally not apply to ambient pressure tests, test thermocouples shall be attached as a minimum to the flight article elements having the largest thermal mass. In addition, control thermocouples shall be attached to elements having the greatest sensitivity to temperature exceedances, per par. 3.6.8.2, and these shall be monitored through the test process. In general, instrumentation cables may be run into the temperature chamber through portholes without the use of feedthrough connectors, as long as contamination and safety requirements are met.

4.4.6.2 Precautions

The precautionary thermal vacuum requirements of Section 4.4.5 apply to temperature cycle tests, except as modified herein.

4.4.6.2.1 Contamination

Flight hardware shall be protected from moisture deposition through the use of gaseous nitrogen (GN2) purging. Use of GN2 shall be in accordance with the safety requirements specified in the Performance Assurance Implementation Plan or the subcontractor PAR. Purge gases shall meet the cleanliness requirements specified in the Contamination Control Plan.

A trial temperature cycle shall be performed to the maximum temperature ranges with all available test equipment prior to installation of the flight component into the chamber. Witness plates shall be used to verify deposition levels are within the allowable ranges specified in the Contamination Control Plan during the trial cycle and the test.

4.4.6.2.2 Electrical Discharge Check

Not applicable for ambient pressure testing.

4.4.6.3 Test Set–up

The thermal vacuum requirements of Section 4.4.5 apply to temperature cycle tests, except as modified herein.

Test fixtures used for ambient pressure temperature cycle tests should emulate the mechanical mounting configuration used in the flight design to the maximum extent possible. Thermal simulation of mounting surface properties is not a requirement unless otherwise specified in Section 4 of the component specification.

4.4.6.4 Test Item Operations

The thermal vacuum requirements of Section 4.4.5 apply to temperature cycle tests.

4.4.6.5 Temperature Cycling

Temperature cycling requirements for the ambient temperature cycle tests follow the same sequence as that used for the thermal vacuum component test, except for the pressure–related activities (pump–down, electrical discharge check, vent–back).

Figure 6 illustrates the required thermal cycling sequence.

4.4.6.6 Qualification

For qualification (QTM and Protoflight) testing, temperature cycling shall subject the component to temperatures 10°C above and below the predicted on–orbit temperature extremes for the component. (See Section 3.6.8.6.)

4.4.6.7 Acceptance

After the component has successfully completed qualification testing, all subsequent units shall be acceptance tested. For acceptance testing, temperature cycling shall subject the component to temperatures 5°C above and below the predicted on–orbit temperature extremes for the component. (See Section 3.6.8.6.)

4.4.7 Thermal Balance

Components so designated in Table XIII of Appendix III and/or the component specification shall undergo thermal balance testing. Thermal balance tests verify the thermal design and the ability of the thermal control system to maintain the required temperature and gradient limits by validating the TMM used to predict flight thermal conditions. Thermal balance tests may be combined with thermal vacuum tests provided the requirements of both tests are met.

4.4.7.1 General

Critical thermal balance conditions shall be determined by analysis. Nominal and worst–case scenarios shall include:

a. Nominal external absorbed flux plus nominal internal power dissipation.

b. Maximum external absorbed flux plus maximum internal power dissipation (at maximum voltage).

c. Minimum external absorbed flux plus minimum internal power dissipation (at minimum voltage).

Consideration shall be given to the following factors:

a. Reflections

b. Satellite infrared emissions

c. Shadowing

d. Changes in properties of thermal surfaces due to orbital exposure or ground handling.

e. Smoothing of highly variable parameters

The component TMM as described in Section 4.2.3 shall be exercised using the data from the nominal and worst case scenarios listed above to predict the on–orbit performance of the component thermal design. Correlation of analytic predictions with the test results shall serve to refine and validate the TMM, which upon validation shall be used to verify that all thermal design requirements have been met, and shall be used to validate thermal cycle and thermal vacuum temperature limits.

4.4.7.2 Measurement and Instrumentation

The thermal vacuum test provisions of Sections 3.6.8 and 4.4.5 apply to component thermal balance testing. Test thermocouples shall be located close to areas corresponding to the thermal nodes used in the component detailed TMM.

4.4.7.3 Precautions

The thermal vacuum test precautions of Sections 3.6.8 and 4.4.5 apply to component thermal balance testing.

4.4.7.4 Test Set–up

External boundary conditions resulting from the orbital environment and Spacecraft interactions shall be supplied by simulating incident and/or absorbed solar/planetary irradiation. Internal thermal boundary conditions shall be supplied by use of mechanical and thermal mock–ups with resistance elements to duplicate internal dissipation, the use of interfacing flight hardware, or a

combination of both. The thermal balance test setup and chamber shall be calibrated to determine direction and intensity of the significant energy sources and effective heat skin temperature. Calibration may be obtained by direct measurement, analysis, or an earlier determination. The resulting energy parameters selected for the test condition and component test configuration shall be used on the analytical model to predict nodal temperatures for chamber test conditions prior to the test. The component test configuration shall adequately reflect the conditions and predictions of the analytical model to ensure verification. Simulated energy balance conditions shall be sufficient to verify thermal design.

4.4.7.5 Test Item Operations

During the test, the component shall be operated in its orbital mode and monitored. In some cases, component operations may be simplified as long as the power dissipations are simulated (e.g., a digital component whose power dissipation does not vary with operational mode may just be left powered on).

4.4.7.6 Test Levels and Cycles

Test temperature levels, duration, and stabilization conditions for components shall be determined in the TMM and included in the verification procedure.

4.5 Demonstrations

The following demonstrations shall be performed at the component level in order to verify operational capability.

4.5.1 Mechanical Function

Components which contain mechanical devices shall demonstrate all mechanical operations during qualification and acceptance testing of the hardware, to the extent possible. These demonstrations shall ensure: that each mechanism can perform satisfactorily under worst–case conditions, that clearances are satisfactory in all cases, and that all mechanisms can withstand the worst–case loads. Where practical, the demonstrations shall be conducted at nominal, low and high energy levels for each mechanical operation. The demonstrations shall consider the adverse effects of variations in temperature, friction, spring forces, stiffness of cabling and thermal insulation, and where applicable, spin rate.

4.5.1.1 Precautions

The results of the static and kinematic analyses described in Section 4.2.1 shall be used to guide mechanical demonstrations to ensure that the safe operating conditions for deployable mechanisms shall not be exceeded.

4.5.2 Leakage

Components containing fluids or pressurized compartments shall be checked for leakage before and after being subjected to the stress–inducing portions of the environmental test program. These checks may be conducted while the test item is in either an operating or non–operating mode. Leak

checks shall be conducted under steady–state conditions. Adequate precautions shall be taken to prevent injury to test personnel or damage to the component while checking for leaks. Leakage rates shall be within prescribed mission limits as specified in the pertinent performance specification.

4.6 Mass Properties

The weight and the center of mass of all components shall be measured. Moments and products of inertia shall be calculated with additional measurements as required if analysis or other considerations so dictate. Measurements shall be made at the end of the environmental test sequence in order to demonstrate conformance with design values. The component shall be in its proper flight configuration, or as close as possible, for mass properties measurements. Mass properties shall demonstrate conformance to design values within the tolerances specified in Table VIII.

4.7 Interface Verification

Component interface requirements are specified in the General Interface Specification. These requirements shall in general be verified in two ways:

a. Interfaces which affect testable performance parameters of the component or its higher level assemblies shall have final verification upon performance testing of the affected assembly.

b. Interfaces for which no higher level performance test exists, or for which any of the following conditions are present, shall undergo interface verification tests and/or inspections prior to integration with other hardware elements:

    1. Damage could result from integration/installation activities for which interface parameters are not met.

    2. Anomalies would be difficult to isolate or correct if detected at the integrated level.

4.7.1 Internal Interfaces

Component internal interfaces are not covered in this document.(See component specifications).

4.7.2 External Interfaces

Components which have electrical, thermal, or mechanical interfaces to other components shall have these interfaces verified during EM, major assembly, subsystem, or Spacecraft interface verification tests.

Component mechanical, thermal, and electrical interfaces shall be verified to meet the appropriate requirements of the GIS (and the GIIS, for components which are to be mounted on an instrument or on an instrument panel.)

5 EQUIPMENT MODULE VERIFICATION

5.1 General

Equipment modules (EMs) shall be designed, assembled and qualified at Astro Space using hardware qualified at the component level. Equipment modules shall be designed to allow standalone analysis, test, inspection and demonstration activities.

5.2 Analysis

The following sections define the analysis at the EM level that shall be conducted to verify the performance of the EM.

5.2.1 Mechanical

Stress analysis shall be performed on all EM structures to verify that positive margins of safety exist for all load cases. Stress analysis shall also be performed to provide test predictions and load limitations. The analysis shall be performed in accordance with the structural design criteria specified in the Appendix to the Structures and Mechanisms Subsystem Specification, PS20001415. Structural elements which do not meet the no–test criteria specified therein shall be subjected to strength testing.

Dynamic analysis shall be performed to verify dynamic characteristics and to assess test environments. The modeling techniques used shall be validated by a modal survey of each EM using the flight structure and mass models of the components. Each EM model shall be updated so that the model correlates with the frequencies and mode shapes of the survey up to 70 Hz.

Interference analysis shall be performed to verify clearances between components within EMs. Field–of–view (FOV) analysis shall be performed to verify that GN&C sensor EM FOVs are not obstructed. The solid modeling techniques used shall be integrated to the extent practicable with the actual design database, and shall assume maximum material conditions. Allowances shall be made for thermal and/or electrical hardware which is routed within the EM in evaluating clearances.

Analysis shall also be conducted (where appropriate) to verify that the EM structures will maintain a positive margin at loads equal to those induced by the maximum expected pressure differential during ascent to orbit, with appropriate factors of safety, as defined in the GIS.

5.2.2 Mass Properties

Analysis shall be performed in order to supplement weight measurement in defining critical mass properties. A mass property database shall be maintained to provide accurate weight estimates of EMs. This database shall be used to support mechanical analysis activities.

5.2.3 Thermal

A detailed analytical model of the EM shall be developed and used to make thermal balance test predictions. Thermal Math Models (TMMs) shall be developed for each EM to the same requirements as specified in Section 6.2.3 for all Major Assemblies. Nodes representing each

component, as well as the performance predictions for the EM–mounted heat pipes, and the required external interfaces shall be incorporated into the EM–level models. These models shall be validated by use of thermal balance tests on the most complicated and/or temperature–critical modules, as specified in Table XIII of Appendix III. Upon completion of thermal balance tests, test results shall be used to correlate a detailed model to increase the accuracy of further flight performance predictions.

Analysis shall also be performed to ensure that the EMs and their components can endure the temperature and humidity conditions they will encounter during transportation and storage. These conditions are specified in the General Interface Specification.

5.2.4 Electrical

Analysis of electrical subsystem performance shall in most cases be conducted at the subsystem level because some of the electrical components within a given subsystem may be distributed among different EMs. Analysis shall be performed, where required, to predict electrical performance characteristics expected during EM–level subsystem performance tests. Verification of electrical subsystem performance at the EM level will be accomplished generally by performance testing during environmental exposure.

5.3 Inspections

Inspections which are required to be performed on EMs during the verification process shall be specified in the applicable assembly performance specification. Measurement accuracies and calibration requirements for these inspections shall be as specified in the Performance Assurance Implementation Plan.

Non–destructive test methods such as dye penetrant inspections and radiography may be required to supplement visual and dimensional inspections, particularly for the EM structure. These methods shall meet the inspection requirements specified in the Performance Assurance Implementation Plan. The item specification shall in Section 4 define any item–specific requirements for non–destructive tests.

5.4 Environmental Test Sequence

The typical EM test flow is depicted in Figure 10, Appendix IV. The GN&C Sensor EM test flow is depicted in Figure 11 of Appendix IV. These test flows are general, and may be varied on a case–by–case basis. Inspections must be performed before and after all mechanical tests to verify that no significant changes have occurred.

5.4.1 Trend Parameters

Measurable parameters which relate to performance stability shall be evaluated at the equipment module level. See Section 3.6.3.1 for detailed requirements.

5.4.2 Electrical Function

Performance tests shall be performed at key points before, during, and after the environmental portions of qualification and acceptance testing of EMs to confirm that the hardware has not suffered any functional damage as a result of environmental exposure. These tests shall include the

application of expected voltages, impedances, frequencies, pulses and waveforms at the electrical and communication interfaces of the test items. Electrical continuity and performance, response time, and other relative checks shall be performed. These tests shall be conducted in areas which satisfy the cleanliness requirements of the Spacecraft Contamination Control Plan, PN20001412.

Functional test requirements specific to each EM shall be defined in the EM performance specification.

5.4.2.1 Functional Test

A Functional Test shall verify the correct electrical/mechanical response from the test item in each of its operational modes. End–to–end evaluations of communications, clock, power, and other signals shall be verified. Functional Tests shall be used in cases where a Comprehensive Performance Test is not warranted or impractical, as shown in Figure 10, Appendix IV.

Functional Tests shall be performed upon assembly of the EM. Additional functional tests may be required after rework to or reassembly of the EM where specified by ADR disposition or by Tables III through VI.

5.4.2.2 Comprehensive Performance Test

The Comprehensive Performance Test (CPT) shall be a detailed verification that the EM meets performance specification requirements. The CPT shall be used to verify satisfactory performance in all operational and contingency modes within practical limits of cost, schedule, and environmental simulation capabilities. The following parameters shall be included during this test.

a. The operation of all redundant circuitry and/or components shall be verified. This shall include verification of cross–strap paths between components.

b. All command and data paths to, from, and between subsystem elements within the EM shall be verified.

c. Values for subsystem trended performance parameters identified in the Verification Plan shall be evaluated for both prime and redundant hardware.

d. Each performance requirement for the EM listed as verified by EM level test in Section 4 of the EM specification shall be addressed.

e. Each performance requirement for the subsystem listed as verified by EM level test in Section 4 of the subsystem specification shall be addressed.

The position of the CPTs in the EM verification sequence is shown in Figure 10, Appendix IV. The initial CPT shall be used as a baseline for comparison against all subsequent CPTs. Additional CPTs shall be conducted after environmental testing.

5.4.2.3 Environmental Performance Test (EPT)

During the temperature cycle test (under vacuum or ambient pressure), the EM shall undergo an abbreviated performance test at the high and low temperature plateaus.

Performance tests during thermal or temperature testing shall be a subset of the CPT as required to verify workmanship parameters at the EM level. Specifically, any subsystem performance parameters thought to be influenced by assembly/installation errors shall be tested to the extent practical within the temperature cycle facility. The difference between the EPT and the CPT shall be documented in a Verification Report.

5.4.3 EMC Tests

EMC tests are not applicable at the EM level, except as defined on a case–by–case basis in the individual EM specification.

5.4.4 Modal Survey

5.4.4.1 General

Modal surveys shall be performed on QTMs of EM structures or on the protoflight units as identified in Table XIII, Appendix III. These surveys shall be performed to establish structural modes and natural frequencies in order to validate analytical models. Inspections shall be conducted before and after a modal survey in order to determine if any significant changes have occurred.

Mass simulation for components mounted within the EMs shall be used to facilitate testing and to identify the fundamental modes of the structure. The mass models used shall emulate the weight and CG of the components to within the tolerances shown in Table VIII.

5.4.4.2 Instrumentation and Measurement

The general requirements specified in Section 3.6.7 for instrumentation and measurement shall also be applicable for modal survey testing. Response measurements shall be recorded and plotted using modal graphics. Measurements and the location of these instruments shall be specified in the pertinent test plan and procedure(s).

5.4.4.3 Test Set–Up

Boundary conditions between the test article and test fixturing shall represent the launch configuration. Structures incorporating kinematic mounts at the Spacecraft interface shall use flight or simulated mounts.

5.4.4.4 Test

Test levels for modal testing shall be specified in the pertinent test plan and procedure(s). During exposure, the test item shall be monitored and measurements shall be compared to the input levels specified in the test documents. Modes shall be measured from 0 Hz up to 70 Hz as a minimum. The orthogonality of the measured modes to the analytically predicted modes shall be determined to evaluate the adequacy of the test.

5.4.5 Optical Bench Vibration

5.4.5.1 General

Prior to final assembly in the GN&C Equipment Module, the Optical Bench (with mass model components) shall be subjected to a three–axis sine vibration exposure, for the purpose of verifying alignment stability.

Mass simulation for the Optical Bench shall be identical to the modal test setup, unless analysis results indicate that a more appropriate mass distribution is desirable to achieve the test goal. In addition to simulating the weight and CG, the mass models will include an alignment mirror cube mounted in a similar location to the sensor aperture. Mechanical mounting interfaces between the sensor mass model and the Optical Bench shall be identical in design and manufacturing tolerances to the flight installation, and shall be verified by inspection.

Hardware items to which alignment cubes shall be mounted for environmental testing include the following:

a. Optical Bench (Primary Cube)

b. Optical Bench (Secondary Cube)

c. IRU Mass Model

d. SSST Mass Models

5.4.5.2 Instrumentation and Measurement

The general requirements specified in Section 3.6.7 for instrumentation and measurement shall be applicable for optical bench sine vibration. Response measurements shall be recorded and plotted. Measurements and the locations of the sensors shall be specified in the pertinent test plan.

5.4.5.3 Test Set–Up

Boundary conditions between the Optical Bench and the test fixturing shall represent the launch mounting configuration to the extent possible.

5.4.5.4 Test Levels

The optical bench sine vibration input shall be at the protoflight level and duration, derived from the GIS as follows:

> The GIS contains maximum expected sine vibration levels, which are equivalent to Acceptance test levels. Protoflight levels are calculated by multiplying Acceptance levels by a factor of 1.25. The Protoflight sweep rate is 4 octaves/minute.

5.4.6 Acoustic Test

5.4.6.1 General

The Acoustic Noise Test shall expose the equipment modules to an acceptance–level dynamic environment similar to that expected when the Spacecraft is launched. (For battery panel, see Section 5.4.6.5.) A visual inspection and functional testing shall be performed before and after the test in order to assess the affect of acoustic noise on the equipment modules. In addition, pre– and post–test alignment measurements shall verify launch shift of aligned items, where applicable.

5.4.6.2 Measurement and Instrumentation

The general requirements specified in Section 3.6.7 apply to the EM Acoustic Test.

5.4.6.3 Precautions

The acoustic facility shall meet the cleanliness requirements stated in the GIS, with the additional requirement that particulate–sensitive components and instruments shall not be exposed to environments which exceed Class 10,000 in cleanliness. Witness plates shall be installed near all contamination–sensitive apertures and on representative horizontal surfaces. Prior to and after the test, these plates shall be evaluated to verify the deposition requirements of the Contamination Control Plan.

Prior to installation of the EM into the chamber, a trial run shall be be performed to verify the dynamic control equipment and procedures. Witness plates shall be examined to establish the cleanliness of the test process.

5.4.6.4 Test Set–Up

The EM shall be installed in an acoustic cell capable of generating launch sound pressure levels. There shall be a uniform sound energy density throughout the chamber. Normally sealed components shall be pressurized during the test to their prelaunch pressure. The EM shall be oriented in its launch orientation.

5.4.6.5 Test Levels

Initially, the EM shall be subjected to low–level "shaping runs." Then the EM shall be subjected to Acceptance level testing, i.e., an acoustic input spectrum which is the same as the Maximum Expected Acoustic levels shown in the GIS. The duration of the test shall be one minute.

The Battery Panel, with workhorse batteries installed, shall be subjected to Protoflight acoustic testing, i.e., an acoustic input spectrum which is 3 dB higher than the Maximum Expected Acoustic levels shown in the GIS. The duration of the test shall be one minute.

When the flight batteries are installed, the acoustic exposure shall be at the Acceptance level (equal to the maximum expected acoustic levels shown in the GIS). The test duration shall be one minute.

A post–test Comprehensive Performance Test shall then be performed.

5.4.7 Sine Vibration

5.4.7.1 Strength Test (Sine Burst)

Sine Burst tests shall be performed to qualify the strength of EM structures. Mass simulation shall be identical to the modal test setup unless analysis results indicate that a more appropriate mass distribution is desirable to achieve the test goal. Mass simulation for protoflight and flight units shall represent the flight configuration to the best possible extent.

5.4.7.1.1 Instrumentation and Measurement

The general requirements specified in Section 3.6.7 for instrumentation and measurement shall be applicable for Sine Burst testing. Response measurements shall be recorded and plotted. Measurements and the locations of the sensors shall be specified in the pertinent test plan.

5.4.7.1.2 Test Set–Up

Boundary conditions between the test article and test fixturing shall represent the launch mounting configuration. Structures incorporating Kinematic Mounts at the Spacecraft interface shall use flight quality mounts.

5.4.7.1.3 Test Levels (Sine Burst Test)

The test input level for the Protoflight and QTM EM structure shall be 1.25 times the Final Design Loads Cycle results in each of three axes. For Acceptance level testing, the input test level shall be equal to the maximum predicted load from the Final Design Loads Cycle Analysis. The loads and frequency values may be different for each axis of each EM. The test loads shall be imposed at the lowest frequency which permits development of the calculated loads (to be determined at the time of test, based on low level frequency surveys).

The duration for QTM, protoflight, and acceptance units shall be a minimum of five cycles.

5.4.7.2 Sine Sweep Vibration Test

Sine sweep vibration testing shall be performed on each Equipment Module to verify that the EM and its constituent components will survive the launch environment. The EM shall be tested in each of three mutually perpendicular axes.

5.4.7.2.1 Instrumentation and Measurement

The requirements listed in Section 5.4.7.1.1 for Strength Test also apply to the Sine Sweep Vibration Test.

5.4.7.2.2 Test Setup

The requirements listed in Section 5.4.7.1.2 for Strength Test also apply to the Sine Sweep Vibration Test.

5.4.7.2.3 Test Levels

All EMs shall be subjected to protoflight sine vibration. Test details, such as sweep rate and test levels, are provided in the Appendix of the Structure and Mechanisms Subsystem Specification.

5.4.8 Mechanical Shock

Equipment Modules will not be exposed to mechanical shock testing.

5.4.9 Thermal Balance

Thermal Balance tests shall be performed to confirm the analytical thermal model of certain EMs and to verify the design of its thermal control hardware. These tests shall simulate the thermal conditions predicted to be the most critical for the thermal control subsystem. Table XIII indicates which EMs shall receive thermal balance testing.

5.4.9.1 General

The analytical thermal model, which simulates the EM shall be exercised using worst–case scenarios as well as pertinent temperature and thermal flux parameters. This model shall be modified to reflect the test chamber conditions and used to predict the performance of the thermal control subsystem during the test. Correlation of the analytical predictions with the thermal balance test results shall serve to refine and validate the analytical model.

The analyses of worst–case scenarios shall include, but not be limited to the following:

a. Maximum external absorbed flux plus maximum internal power dissipation

b. Minimum external absorbed flux plus minimum internal power dissipation.

The analysis shall also consider: surface reflections; shadowing; infrared emission from other Spacecraft surfaces; and changes in the solar absorptance/emittance ratio of the thermal control surfaces due to degradation in orbit.

5.4.9.2 Measurement and Instrumentation

The thermal vacuum test provisions of Sections 3.6.8 and 4.4.5 apply to EM thermal balance testing. Test thermocouples shall be located close to areas corresponding to the thermal nodes used in the component detailed TMM.

5.4.9.3 Precautions

The thermal vacuum test precautions of Sections 3.6.8 and 4.4.5 apply to EM thermal balance testing.

5.4.9.4 Test Set–up

External thermal boundary conditions resulting from orbital thermal effects on the EM shall be induced in the test chamber by simulating incident and/or absorbed solar/planetary irradiation.

Internal thermal boundary conditions shall be induced by the use of actual flight hardware or simulators which have been verified to match the thermal characteristics of the flight hardware and with resistance heater elements to supplement internal dissipation, if necessary. Component heat dissipation and harness line losses shall be measured to an accuracy of 1%, wherever feasible.

5.4.9.5 Test Item Operations

During the test, the EM shall be operated in its orbital mode, unless otherwise specified, and monitored. In some cases, EM operations may be simplified as long as the power dissipations are simulated.

5.4.9.6 Test Levels and Cycles

Test temperature levels, duration, and stabilization conditions for components shall be determined in the TMM and included in the verification procedure.

The tests shall conform to the conditions analyzed wherever practical and encompass as many scenarios as analyzed, with a minimum of two. The test results shall be recorded for post–test correlation to the analytical model. Adjustments made to the analytical model to improve correlation shall be included in the analytical model used for flight performance predictions.

5.4.10 Thermal Vacuum

Thermal vacuum testing of equipment modules, where performed (see Table XIII, Appendix III), shall be as defined in Section 5.4.11.6. The thermal vacuum test requirements of Section 3.6.8 apply to equipment modules. Test levels and sequences shall conform to the requirements specified in Section 5.4.11.

Thermal–vacuum testing at the equipment module level is not counted against the 96–hour cumulative soak durations required for components.

5.4.11 Temperature Cycle (Thermal Cycle at Ambient Pressure)

Table XIII indicates which EMs shall be temperature cycle tested, to the levels defined in Figure 7. Thermal cycling at the EM level is not counted against the 96–hour cumulative soak durations indicated for components.

5.4.11.1 Measurement and Instrumentation

The requirements specified for component temperature cycle tests in Section 4.4.6.1 apply to EMs.

5.4.11.2 Precautions

The precautionary requirements specified for component temperature cycle tests in Section 4.4.6.2 apply to EMs.

(Replace with fig7)

Figure 7. Equipment Module Temperature Cycle Test Sequence

5.4.11.3 Test Set-up

The requirements specified for component temperature cycle tests in Section 4.4.6.3 apply to EMs.

5.4.11.4 Test Item Operations

The EM shall be powered throughout the test, unless otherwise specified.

5.4.11.5 Temperature Cycling

The cycling described below applies to vacuum or ambient pressure operations. The temperature change rates shall be 10°C per hour. The specific details of where to measure the effective temperature shall be in the EM performance specification

Three temperature cycles shall be performed, followed by a contamination prevention half–cycle as follows (see Figure 7):

a. (Cycle 1) Initial Cycle – Starting from ambient temperature, the chamber shall be operated to induce one full temperature cycle to workmanship levels, as defined in Section 5.4.11.6. The plateaus shall be maintained for four hours after stabilization to the requirements of Section 3.6.8.2.

   During the high and low temperature plateaus, a functional test shall be performed, followed by Thermal Balance testing.

b. (Cycle 2 and 3) – The chamber shall be operated to induce a temperature cycle to workmanship levels. The plateaus shall be maintained for four hours after stabilization to the requirements of Section 3.6.8.2. CPT testing shall be performed throughout the cycle.

c. Contamination Prevention Half Cycle – For contamination prevention, an additional half cycle shall then be performed. During this half cycle, the chamber temperature shall be increased to stabilize the EM at 35°C. The module shall be maintained at this temperature for two hours. The chamber shall then be brought to ambient temperature. The temperature change rate shall not exceed the on–orbit operating temperature change rates (10°C per hour) during this half cycle.

Figure 7 illustrates the required temperature cycling sequence.

5.4.11.6 Workmanship Temperature Testing

All EM units shall be workmanship tested. For workmanship testing, temperature cycling shall subject the most temperature–limited component within the EM to temperatures 10°C above and below the predicted on–orbit operating temperature extremes for that component. Other components shall float to the resulting values, which shall be monitored to be no worse than 10°C above or below the predicted on–orbit temperature extremes. The predicted on–orbit temperature extremes are listed in the GIS. Deviations must be worked out on a case–by–case basis, as defined in paragraph 3.5.1.

5.5 Demonstrations

The following demonstrations shall be performed on the EMs in order to verify their operational capability.

5.5.1 Mechanical Function

EMs which contain mechanical devices shall demonstrate all mechanical operations during performance testing of the hardware. These demonstrations shall ensure: that each mechanism can perform satisfactorily under worst–case conditions, that clearances are satisfactory in all cases, and that all mechanisms can withstand the worst–case loads. The demonstrations shall consider the adverse effects of variations in temperature, friction, spring forces, stiffness of cabling and thermal insulation, and where applicable, spin rate.

5.5.1.1 Precautions

The results of the static and kinematic analyses described in Section 4.2.1 shall be used to guide mechanical demonstrations to ensure that the safe operating conditions for deployable mechanisms shall not be exceeded.

5.5.2 Leakage

EMs containing fluids or pressurized compartments shall be checked for leakage before and after being subjected to the stress–inducing portions of the environmental test program, as identified in the Verification Plan. These checks may be conducted while the test item is in either an operating or non–operating mode. Leak checks shall be conducted under steady–state conditions. Adequate precautions shall be taken to prevent injury to test personnel or damage to the EM while checking for leaks. Leakage rates shall be within prescribed mission limits as specified in the pertinent performance specification.

5.6 Mass Properties

The weight and the center of mass of EMs shall be measured. Moments and products of inertia shall be calculated with additional measurements if analysis or other considerations so dictate. Measurements shall be made at the end of the environmental test program. The EM shall be in its proper flight configuration, or as close as possible, for mass properties measurements. Mass properties shall demonstrate conformance to design values within the tolerances specified in Table VIII.

5.7 Interface Verification

EM interface requirements are specified in the General Interface Specification. These requirements shall in general be verified in two ways:

a. Interfaces which affect testable performance parameters of the EM or its higher level assemblies shall have final verification upon performance testing of the affected assembly.

b. Interfaces for which no higher level performance test exists, or for which any of the following conditions are present, shall undergo interface verification tests and/or inspections prior to integration with other hardware elements:

   1. Damage could result from integration/installation activities for which interface parameters are not met.

   2. Anomalies would be difficult to isolate or correct if detected at the integrated level.

EM interface parameters which fall into classification "b" above, and their interface verification requirements, shall be specified in the EM Performance Specification. These parameters, which include mechanical, thermal, and electrical interfaces shall be verified at the EM level of assembly.

5.7.1 Internal Interfaces

Interfaces among EM components are verified during the module assembly and integration phases of the EM test flow. These interfaces are verified as identified in the individual component specification.

The mechanical, thermal, and electrical interfaces between the Equipment Module and its subsidiary components shall be verified to meet the appropriate requirements of the GIS and the component specifications.

5.7.2 External Interfaces

EMs which have electrical, thermal, or mechanical interfaces to other components shall have these interfaces verified during subsystem or Spacecraft interface verification tests.

(This page intentionally left blank.)

6 MAJOR ASSEMBLY VERIFICATION

6.1 General

The EOS–AM major assemblies are as follows:

a. Propulsion Module (PM)

b. Spacecraft Core Assembly (Structure)

c. High Gain Antenna

d. Solar Array

e. Equipment Modules (covered in Section 5, not addressed in this section).

Verification activities for these assemblies shall be performed to the requirements identified herein. Verification activities for EMs shall be performed to the requirements of Section 5.

Subcontractors who produce the Major Assemblies shall comply with the requirements of this section and the assembly specification. Subcontractors shall document their verification plans and activities in accordance with 20004280, Subcontractor PAR.

6.2 Analysis

The following analyses at the Major Assembly level are required to adequately verify the performance of the assembly.

6.2.1 Mechanical

The requirements specified in Section 5.2.1 for EM mechanical analyses apply to other major assemblies.

In addition, kinematic analysis shall be performed for all deployable appendages to verify clearances and torque margins. Kinematic analysis must also be performed on all moving mechanisms to ensure that the mechanism can perform satisfactorily with adequate margin under worst–case conditions.

6.2.2 Mass Properties

Analysis shall be performed in order to supplement weight measurement in defining critical mass properties. A mass property database shall be maintained to provide accurate weight estimates of Major Assemblies. This database shall be used to support mechanical analysis activities.

6.2.3 Thermal

The Thermal Math Models (TMMs) listed below shall be used to support the design and analysis of the Solar Array Assembly, the High Gain Antenna Assembly, and the Propulsion Module Assembly:

a. TRASYS22 surface model

b. SINDA87 or SINDA85 reduced node thermal model

c. SINDA87 or SINDA85 detailed thermal model

The surface model and the reduced node model will be incorporated into the Spacecraft level TMM described in Section 7. These models shall be validated by use of thermal balance tests and updated during the design and test phases, as required. Analysis shall also be performed to ensure that the major assemblies can endure the temperature and humidity conditions they will encounter during test, transportation, storage, and orbit.

6.2.3.1 Detailed Thermal Model Requirements

The detailed TMM shall demonstrate that all internal assembly thermal requirements are met for all expected mission modes and testing. This model shall predict the change in heat flows and the resulting temperature changes for any alteration in the environment, internal power dissipation, or other model parameter.

a. SINDA85 or SINDA87 are the required thermal analysis software on which the model shall be based.

b. The size of the detailed thermal model shall be sufficient to demonstrate that all defined requirements for temperature and temperature gradients are met.

c. Every critical element or subassembly within the component and every flight temperature sensor shall be represented by a node which adequately predicts its temperature.

6.2.3.2 Surface Model Requirements

a. The surface model shall be developed in a Thermal Radiation Analyzer System (TRASYS22) format.

b. The surface model shall be as small as is reasonably possible. The total number of surfaces shall not exceed 50.

c. The surface model shall form a completely closed volume. Surface area used for mechanical attachment of the component to a Spacecraft surface shall be represented by a surface or set of surfaces.

d. In general, each external node of the assembly reduced node and detailed TMMs shall be represented by a surface or set of surfaces in the surface model. Any surface of special interest (i.e., a radiator) shall be modeled separately.

e. The local coordinate system shall be rectangular with the same orientation as the Spacecraft coordinate system.

f. All length dimensions shall be in inches.

g. A unique numbering system shall be developed which prevents duplication of ID numbers between components.

6.2.3.3 Reduced Node Model Requirements

The reduced node model shall be a reduced version of the detailed thermal model. Results of the reduced and detailed models shall be similar in the areas of heat flow (both radiation and conduction) and average temperatures.

a. The reduced node model shall be developed in a Systems Improved Numerical Differencing Analyzer (SINDA) SINDA85 or SINDA87 format.

b. The model shall be capable of steady–state and transient analysis.

c. The model shall not exceed 50 nodes.

d. All length dimensions shall be input in inches. All heat energy data shall be input in watts. The Celsius temperature scale shall be used.

e. The overall energy balance summation of the reduced node TMM with its boundaries shall agree with the detailed TMM to 3 percent or better for any set of boundary conditions and internal power dissipations.

f. The heat transferred by conduction or radiation from node to node of the reduced node thermal model shall agree with the heat transferred from the corresponding nodes in the detailed thermal model to within 5 percent for any set of boundary conditions and internal power dissipations.

g. The temperature relationship between each flight temperature sensor and the reduced node thermal model node which contains the flight sensor shall be provided.

h. Power distribution and time–lines shall be provided for each expected node of the mission and for ground testing.

i. Each external node of the reduced node thermal model shall have a one–to–one correspondence with a surface or group of surfaces from the surface model.

6.2.4 Electrical

Since any particular Major Assembly often contains components from multiple subsystems, analysis of electrical subsystem performance at the Major Assembly level shall be performed where required to predict test results or interpret test data. Verification of electrical subsystem performance at the major assembly level will be primarily accomplished by performance testing during environmental exposure.

Analysis of electrical subsystem performance for the Propulsion Module will be performed by Astro Space in accordance with the PM performance specification.

6.3 Inspection

Inspections to be performed on Major Assemblies as part of the verification process shall be specified in the applicable assembly performance specification.

6.4 Environmental Test Sequence

The verification flows of the Major Assemblies are shown in the figures listed below (All figures in Appendix IV):

Propulsion Module –Figure 12
Spacecraft Structure – Figure 13
High Gain Antenna – Figure 16
Solar Array – Figure 17

6.4.1 Trend Parameters

Measured parameters which relate to performance stability shall be evaluated at the major assembly level. See Section 3.6.3.1 for detailed requirements.

6.4.2 Electrical Function

Performance tests shall be performed at key points before, during, and after the environmental portions of Protoflight Testing of Major Assembly hardware to confirm that the hardware has not suffered damage as a result of environmental exposure.

These tests shall include the application of expected voltages, impedances, frequencies, pulses and waveforms at the electrical and communication interfaces of the test hardware. Electrical continuity and performance, response time, and other relative checks shall be performed. Satisfactory performance shall be demonstrated in all operational and contingency modes. The testing shall exercise all redundant circuitry.

6.4.2.1 Functional Test

A Functional Test shall be performed to verify the correct electrical/mechanical response to the test hardware in each of its operational modes. Detailed end–to–end evaluations of communications, clock, power, and other signals shall be verified.

Functional Tests shall be performed before, during and after environmental tests in order to verify that the test item has not been degraded by environmental testing. Functional Tests shall also be used in cases where a Comprehensive Test is not warranted or impractical.

Functional Tests shall be performed upon assembly of the major assembly. Additional functional tests may be required after rework to or reassembly of the unit where specified by ADR disposition or by Tables III through VI.

6.4.2.2 Comprehensive Performance Test

The Comprehensive Performance Test (CPT) shall be a detailed verification that the major assembly meets performance specification requirements. The CPT shall be used to verify satisfactory performance in all operational and contingency modes within practical limits of cost, schedule, and environmental simulation capabilities. The following parameters shall be included during this test:

a. The operation of all redundant circuitry and/or components shall be verified. This shall include verification of cross–strap paths between components.

b. All command and data paths to, from, and between components within the major assembly shall be verified.

c. Values for subsystem trended performance parameters shall be evaluated for both prime and redundant hardware. (See Sections 3.6.3.1 and 4.4.1.)

d. Each performance requirement for the major assembly listed as "verified by test" in Section 4 of the major assembly specification shall be addressed.

e. Each performance requirement for the subsystem listed as "verified by major assembly level test" in Section 4 of the subsystem specification shall be addressed.

The position of the CPTs in the PM, HGA, and S/A verification sequences are shown in Figures 12, 16, and 17, respectively, of Appendix IV.

The initial CPT shall be used as a baseline for comparison against all subsequent CPTs. Additional CPTs shall be conducted after environmental testing.

6.4.2.3 Environmental Performance Test

Requirements specified in Section 4.4.2.3 for environmental performance testing of components apply to major assemblies.

6.4.3 EMC Tests

The performance of Major Assemblies shall be verified for electromagnetic compatibility in accordance with the requirements of the EOS Spacecraft EMC Control Plan, PN20005869.

6.4.4 Static Load Tests

6.4.4.1 General

A static load test shall be performed on the primary structure and its truss elements and titanium node fittings to verify the structural integrity of this assembly. A similar test shall be performed on the propulsion module structure. (See Figures 12 and 13 of Appendix IV.)

6.4.4.2 Instrumentation/Measurement

Deflection and strain measurements shall be used to monitor the response of the primary structure under loading. The applied test load shall be measured with strain gauge type load cells.

6.4.4.3 Tests

6.4.4.3.1 Tube Elements

Both tension and compression tests shall be performed on tube elements. The ends of the tube elements shall be fastened using the flight strut process to titanium end–fittings to obviate end effects which could cause spurious results during compression testing. Initial specimens forming a subset

of the tubes shall be tested to failure in compression, tension, and bending. This set shall include at least five representative 3.5" OD tubes tested to each failure mode. Subsequent flight specimens shall be proof–tested to loads equal to 1.25 times the flight loads from the Final Design Loads Cycle (FDLC), in tension and compression, prior to integration into the primary structure. The FDLC analysis is performed by the launch vehicle provider.

Following the test, tubes shall be inspected. Those tested to failure shall be examined and the observed failure mode shall be compared to the predicted mode. Failure loads shall be evaluated using the structural design criteria in the Appendix to the Structures and Mechanisms Subsystem Specification, PS20001415. Flight tubes and their fittings shall be inspected for damage.

6.4.4.3.2 Spacecraft Core Assembly

The Spacecraft Core Assembly consisting of the primary and secondary structures shall be static load tested to the requirements specified herein. The propulsion module structure will also be static load tested.

The assembly shall be attached to the GFE Launch Vehicle Adapter. Mass models shall be installed to represent the EMs, S/A, HGA, PM tanks, and Instruments. Since these models shall be used for the static load test, modal test, and alignment tests, they shall simulate the following parameters:

a. Mass and CG

b. Mounting interface mechanics

c. Alignment cube (GN&C EM and Instruments)

Test loads shall be applied to the primary structure to ensure that all bonded joint assemblies not proof tested as elements are loaded to 1.25 times the flight loads from the FDLC, or applicable component specification in tension and compression. Data shall be recorded at each load level before proceeding with the next load level. The loads and application points shall be selected to simulate the global bending and thrust predicted in the launch environment. During the test, selected data shall be reviewed (in real time) to verify load distribution within the core assembly.

Loads applied to instrument mass models for which the supporting structure is not qualified as a component shall be used to qualify the given support structure. These loads shall be equal to 1.25 times the flight loads from the FDLC.

Before and after the structure static load test as shown the Verification Plan, an alignment test shall be performed to verify the launch shift to the pointing error budget for each instrument. In addition, the structure shall be inspected for damage.

6.4.5 Sine Burst Strength Test

Sine Burst tests shall be performed to qualify the strength of the Solar Array, the High Gain Antenna, and the Propulsion Module.

6.4.5.1 Instrumentation and Measurement

The general requirements specified in Section 3.6.7 for the instrumentation and measurement shall be applicable for Sine Burst testing. Response measurements shall be recorded and plotted. Measurements and the locations of the sensors shall be specified in the pertinent test plans.

6.4.5.2 Test Set–Up

Boundary conditions between the test article and test fixturing shall represent the launch mounting configuration.

6.4.5.3 Test Levels

The input test level for the protoflight Major Assemblies shall be 1.25 times the predicted flight values. If required, Major Assemblies which are to receive Acceptance testing would have input test levels which are equal to the predicted flight loads.

6.4.6 Modal Survey

6.4.6.1 General

Modal surveys shall be performed on Major Assembly structures, including the propulsion module structure. These surveys shall be performed to establish structural modes and natural frequencies to validate analytical models. Before and after modal survey, inspections shall be conducted to determine if any detectable changes have occurred. Major Assembly mass simulation shall be representative of the launch configuration. (See Figures 12 and 13 of Appendix IV).

6.4.6.2 Instrumentation/Measurement

The general requirements specified in Section 3.6.7 for instrumentation and measurement shall also be applicable for modal survey testing. Response measurements shall be recorded and plotted using modal graphics. Measurements and the location of these instruments shall be specified in the pertinent test plan and procedure(s).

6.4.6.3 Test Set–Up

For purposes of this test, the Spacecraft Core Assembly structure shall include a GFE launch vehicle adapter. The structure (with adapter) shall be mounted to a seismic mass at the launch vehicle interface to the GFE adapter section.

For other major assemblies, the test item shall be mounted to a support fixture which simulates the interface between the test item and the Spacecraft.

6.4.6.4 Test

Test levels for modal testing shall be specified in the pertinent test plan and procedure(s). During exposure, the test item shall be monitored and measurements shall be compared to the acceptable limits specified in the test documents. The orthogonality of the measured modes to the analytically predicted modes shall be determined to evaluate the adequacy of the test.

The modal test shall determine the resonant modes up to 70 Hz. An orthogonality test shall demonstrate diagonal terms above .90 and off–diagonal terms below .10 for all primary modes. The goal for the corresponding analytical model shall be to predict all primary frequencies to within 5% of the test results while demonstrating orthogonality to the test mode shapes with at least .90 diagonal and less than .10 off–diagonal terms.

All major structural load paths shall be exercised during Spacecraft Core Assembly modal test.

6.4.7 Mechanical Shock

6.4.7.1 General

Major assemblies shall be subjected to pyro shock testing at the assembly level as shown in Table XIII of Appendix III. The shock test will be performed at least two times in order to account for the scatter associated with the actuation of the shock–generating device.

6.4.7.2 Test Set–Up

The test item shall be mounted through its normal mounting points, on the actual or dynamically similar deployment structure. The actual or dynamically similar structure shall be subjected to a shock transient via the use of test pyro squibs identical to the flight units. A triaxial accelerometer mounted to the structure shall be used to measure the shock response spectrum for comparison to the specified spectrum in each of the three orthogonal axes. Since the actual pyro initiation and response dynamics are employed, multiple–axis testing is not required.

6.4.7.3 Test

The shock application shall be by electrical actuation of the deployment pyrotechnic units. The resulting shock response shall be measured at the mounting interface using accelerometers and shall not exceed the values specified in Section 6 of the General Interface Specification.

Following the shock test, a CPT shall be performed to verify the induced loads have not damaged the major assembly.

6.4.8 Acoustic Testing

6.4.8.1 General

Acoustic testing shall be performed on protoflight units of the Propulsion Module, the Solar Array, the High Gain Antenna, and the CPHTS Radiator Panels (although not listed as a Major Assembly).

6.4.8.2 Test Set–Up

The Major Assembly shall be installed in an acoustic cell capable of generating designated sound pressure levels. There shall be a uniform sound energy density throughout the chamber.

6.4.8.3 Test Levels

Initially, the Major Assembly shall be subjected to low–level "shaping runs." Then the Major Assembly shall be subjected to Acceptance level testing. That is, an acoustic input spectrum which is the same as the Maximum Expected Acoustic levels shown in the GIS. The duration of the test shall be one minute.

6.4.9 Thermal Balance

Thermal Balance tests shall be performed to confirm the analytical thermal model of each Major Assembly and to verify the design of its thermal control hardware. These tests shall simulate the thermal conditions predicted to be the most critical for the thermal control subsystem. Requirements specified in Section 5.4.9 for EM thermal balance tests apply to major assembly thermal balance tests.

Table XIII of Appendix III indicates which Major Assemblies require Thermal Balance testing.

6.4.10 Thermal Vacuum

Thermal Vacuum testing shall verify the capability of the Major Assembly to meet performance specification requirements while exposed to worst–case orbital T/V conditions. Except as specified herein, the general requirements of T/V testing specified in Section 3.6.8 and the requirements specified for component T/V tests in Section 4.4.5 shall apply to Major Assembly testing. Figure 7 defines the thermal test profile for Major Assemblies, unless otherwise stated.

6.4.10.1 Solar Array

Since the Solar Array will not be tested during the Spacecraft–level T/V test, it shall undergo 12 thermal vacuum cycles at the Major Assembly level.

6.4.10.2 High Gain Antenna

The HGA shall receive three thermal vacuum cycles at the Major Assembly level (Reflector not required). Table XIII shows the detailed tests required for the HGA reflector and the individual HGA components (Antenna Controller, Gimbal Assembly, Upconverter, Transmitter). The HGA components testing shall be per Section 4.

6.4.11 Temperature Cycling

Major Assemblies which do not require thermal–vacuum testing shall receive temperature cycle testing.

6.4.11.1 Propulsion Module

The PM shall be subjected to temperature cycling as specified in Section 4.4.6 for eight thermal cycles. Once integrated to the Spacecraft, the PM will be subjected to at least four more cycles for a minimum total of twelve thermal cycles.

6.5 Alignment

Alignment tests of the structure shall be performed prior to and after the environmental tests. These tests shall verify that the instrument mounting interfaces have maintained their orientation in the Roll, Pitch, and Yaw axes to within the launch shift budgets specified in the Pointing Error Budget and Alignment Plan.

6.5.1 Instrumentation/Measurement

The structure shall be populated with mass models as described in Section 6.4.4, and placed in an alignment facility with all the necessary optical interferometry equipment and theodolites to establish the geometric and spatial relations as specified in the Pointing Error Budget and Alignment Plan.

6.5.2 Test

The Roll, Pitch, and Yaw axis orientations of each simulated instrument shall be determined relative to those of the alignment cube on the simulated GN&C EM. Gravitational effects shall be evaluated by rotating the structure about the Roll axis and repeating the measurements. Models shall be removed, reinstalled, and re–measured to verify repeatability of alignments.

6.6 Demonstrations

The following demonstrations shall be performed on Major Assemblies in order to verify operational capability.

6.6.1 Mechanical Function

Major Assemblies which contain mechanical devices shall demonstrate all mechanical operations during qualification and acceptance testing of the hardware. These demonstrations shall ensure: that each mechanism can perform satisfactorily under worst–case conditions, that clearances are satisfactory in all cases, and that all mechanisms can withstand the worst–case loads. The demonstrations shall consider the adverse effects of variations in temperature, friction, spring forces, stiffness of cabling and thermal insulation, and where applicable, spin rate.

6.6.1.1 Precautions

The results of the static and kinematic analyses described in Section 6.2.1 shall be used to guide mechanical demonstrations to ensure that the safe operating conditions for deployable mechanisms shall not be exceeded.

6.6.2 Pressure Testing – Propulsion Module

The Propulsion Module shall be exposed to a Proof Pressure Test, to demonstrate compliance with the requirements of the GIS. All pressurized lines, tanks, and other elements must be included. The details of the test are to be defined in the Propulsion Subsystem Performance Specification (PS20008617).

The Proof Pressure Test shall be performed one time, after assembly, to demonstrate adequate margin over the maximum expected operating pressure. (Proof Pressure = 1.5 x MEOP)

Subsequent testing will be at the Maximum Expected Operating Pressure (MEOP), as defined below.

a. After Propulsion Module Vibration and Acoustics (Leak check, at MEOP)

b. After Spacecraft Acoustics, prior to Spacecraft shipment to launch site (Pressure Decay Check, at MEOP)

c. At launch site, prior to fuel loading (Pressure Decay Check, at MEOP)

6.6.3 Pressure Testing – CPHTS

The CPHTS shall be exposed to a Proof Pressure Test, to demonstrate compliance with the requirements of the GIS. All pressurized lines, reservoirs, and other elements must be included. The details of the test are to be defined in the CPHTS performance specification.

The Proof Pressure Test shall be performed prior to filling with ammonia to demonstrate adequate margin over the Maximum Expected Operating Pressure (MEOP). The Proof Pressure shall be 1.5 times the MEOP.

6.6.4 Flow Rate – Propulsion Module

The Propulsion Module shall be exposed to a Flow Rate Test. All thrusters shall be evaluated. The details of the test are to be defined in the Propulsion Subsystem Performance Specification.

The Flow Rate Test shall be performed four (4) times, at MEOP, as follows:

a. After completion of assembly

b. After Propulsion Module Vibration and Acoustics

c. After Spacecraft Acoustics, prior to Spacecraft shipment to launch site

d. At launch site, prior to fuel loading

6.6.5 Latch Valve Leak Check – Propulsion Module

Propulsion Module latch valve leak checks shall be performed, according to the Propulsion System Performance Specification.

6.6.6 Leakage Check – General

Major Assemblies containing fluids or pressurized compartments shall be checked for leakage before and after being subjected to the stress–inducing portions of the environmental test program. These checks may be conducted while the test item is in either an operating or non–operating mode. Leak checks shall be conducted under steady–state conditions. Adequate precautions shall be taken to prevent injury to test personnel or damage to the Major Assembly while checking for leaks. Leakage rates shall be within prescribed mission limits as specified in the pertinent performance specification.

6.7 Mass Properties

The weight and center of mass of the Major Assembly shall be measured. Moments and products of inertia shall be calculated with additional measurements if analysis or other considerations so dictate. Measurements shall be made at the end of the environmental test program. The Major Assembly shall be in its proper flight configuration, or as close as possible, for mass properties measurements. Mass properties shall demonstrate conformance to design values within the tolerances specified in Table VIII.

6.8 Interface Verification

Major assembly interface requirements are specified in the General Interface Specification. These requirements shall in general be verified in two ways:

a. Interfaces which affect testable performance parameters of the major assembly or its higher level assemblies shall have final verification upon performance testing of the affected assembly.

b. Interfaces for which no higher level performance test exists, or for which any of the following conditions are present, shall undergo interface verification tests and/or inspections prior to integration with other hardware elements:

    1. Damage could result from integration/installation activities for which interface parameters are not met.

    2. Anomalies would be difficult to isolate or correct if detected at the integrated level.

Major assembly interface parameters which fall into classification "b" above, and their interface verification requirements, shall be specified in the major assembly performance specification. These interfaces may be mechanical, thermal, or electrical.

6.8.1 Internal Interfaces

Interfaces among major assembly components shall be verified during the assembly and integration phases for that major assembly. These interfaces shall be verified to meet the requirements of the Major Assembly performance specifications.

6.8.2 External Interfaces

Major assemblies have electrical, thermal, or mechanical interfaces to Spacecraft components. Where feasible, the interfaces shall be verified during major assembly testing prior to shipment of the assembly to the integration facility. The remaining interfaces shall be verified during interface verification of the Spacecraft.

7 SPACECRAFT VERIFICATION

Qualified EMs and major assemblies shall be integrated to form the Spacecraft Bus, to which the instrument set shall be integrated to form the Spacecraft. The integration and test sequence for this process is specified in Section 9 of the Verification Plan. The requirements for performance and interface verification of the Spacecraft are specified herein, including the I&T process and Spacecraft analyses. (See Figure 14 and Figure 15 of Appendix IV.)

7.1 General

Instruments shall be integrated to the Spacecraft either directly (direct–mount) or by a secondary structure panel.. During this integration process, instrument performance parameters shall be verified at the integration facility by Bench Acceptance and Cross–Calibration testing as described in the Verification Plan. Interface parameters shall be verified as the instruments are installed on the Spacecraft.

Protoflight testing at the Spacecraft level shall involve subjecting the fully integrated Spacecraft to simulated launch, ascent, and orbital environments to verify that the Spacecraft meets performance specification requirements and is ready for shipment to the Western Test Range for launch. The environments specified within this section shall include interactions with the EOS launch vehicle which may affect Spacecraft performance.

Comprehensive, Functional, Baseline, and Operational tests shall be performed at key times during environmental testing to confirm that exposure of the Spacecraft to protoflight–level environmental conditions did not produce deleterious results. Functional, Baseline, and Operational tests shall be considered adequate for performance verification of the instruments at this level of assembly.

In combination with the protoflight testing, analysis at the Spacecraft level shall verify that the design meets mission, electrical, thermal, structural, and mechanical requirements with the required factors of safety. Testing shall also ensure: that all interfaces are compatible, that hardware was produced with acceptable workmanship, and that systems safety requirements have been met.

7.2 Analysis

The following sections define the analyses at the Spacecraft level that are required to verify that the Spacecraft meets all performance requirements.

7.2.1 Mechanical

The verification of structural integrity shall be based on integrated test and analysis activities. The design and analysis of the Spacecraft shall proceed in three phases: Preliminary design, detail design, and design verification.

During the design phases, stress analysis shall be performed to verify that all Spacecraft structural hardware possesses positive margins of safety for all load cases, including both flight and ground operations and tests. The analysis shall be performed in accordance with the structural design criteria specified in the Appendix of the EOS Structures and Mechanisms Subsystem Specification (PS20001415).

A Verification Load Cycle (VLC) analysis shall be performed by the launch vehicle provider, to verify that the structural design meets all requirements. The coupled loads analysis results obtained from the Verification Loads Cycle (VLC) shall be used to verify the design quasi–static design load factors used in computing the structure margins of safety, and therefore provide a final validation of the structural design.

Instrument net CG load factors shall be derived from the VLC analysis results and compared to the GIIS levels to verify that no instrument loads are exceeded.

The Spacecraft finite element model used for the Verification Loads Cycle Analysis shall be based on a test–verified model. Appropriate modal survey testing methods shall be used to verify dynamic characteristics of the Spacecraft. Results of the modal survey testing shall be used to update the Spacecraft model for use in the Verification Loads Cycle Analysis.

A model uncertainty factor shall be applied to the results of the VLC. This factor will be agreed upon by Astro Space and NASA GSFC.

Interference analysis shall be performed to verify clearances between all elements of the Spacecraft. Field–of–view (FOV) analysis shall be performed to verify that sensor and instrument FOVs are not obstructed. The solid modeling techniques used shall be integrated to the extent practicable with the actual design database, and shall assume maximum material conditions. Allowances shall be made for thermal and/or electrical hardware which is routed within the EM in evaluating clearances.

Kinematic analyses must be performed on all components with moving or deployable mechanisms, including instrument mechanisms. These analyses must ensure that each mechanism can perform satisfactorily with adequate margin under worst–case conditions; that clearances are satisfactory in both stowed and any operational configuration; and that all mechanical elements can withstand the worst–case loads that may be encountered. Maximum material conditions shall be assumed for clearance analyses.

7.2.2 Mass Properties

Analysis shall be performed in order to supplement weight measurement in defining critical mass properties. A mass property database shall be maintained to provide accurate mass, CG, and moment/product of inertia estimates of the Spacecraft. This database shall be used to support mechanical analysis activities.

7.2.3 Thermal

A detailed analytical model of the Spacecraft shall be developed and used to make thermal balance test predictions. This model shall be built from the integrated component, major assembly, EM, and instrument models. Major assembly and instrument providers shall supply simplified and surface TMMs to the requirements specified in Section 4.2.3 to facilitate this integration. Upon completion of the thermal balance tests, the results shall be used to correlate the detailed model in order to increase its accuracy of flight performance predictions. The test–correlated model shall then be used to make the final flight performance predictions.

Analysis shall also be performed to ensure that all Spacecraft hardware can endure the temperature and humidity conditions it will encounter during transportation and storage. These conditions are specified in the General Interface Specification.

7.2.4 Electrical

Verification of electrical performance by analysis at the Spacecraft level will be supplemented by functional and comprehensive performance testing during environmental exposure. Power dissipation levels used for thermal analysis shall be verified.

Command/telemetry analyses shall be performed where required to verify mode, configuration, capacity, hazard, or data requirements as identified in Table I of the Verification Plan and the C&DHS subsystem specification. These analyses shall incorporate data from the Spacecraft baseline tests defined herein to validate the assumptions used. Special tests shall be performed where required to support command/telemetry analyses.

Power subsystem analyses shall be performed to verify Depth of Discharge or other power subsystem performance characteristics as identified in the Verification plan and the EPS subsystem specification. Component performance assumptions used shall be validated by EPS subsystem test data from Spacecraft and component testing. Orbital parameters used in the analysis shall be compared to mission analysis results.

RF link analyses shall be performed where required by the Verification Plan or the COMS subsystem specification. These analyses shall verify the link margins and bit error rates specified in the Contract End Item Specification. These analyses shall incorporate the following:

a. Measured performance parameters taken from COMS components

b. SN and GN performance parameters from their respective ICDs

c. Customer–supplied DAS ground station parameters

d. RF Compatibility Van test data

e. HGA pointing accuracy estimates from the required analyses

EMC/EMI analyses shall be performed as required by the EMC/EMI Control Plan.

7.2.5 Mission

Mission analyses consist of orbital simulations of Spacecraft dynamics and orbital parameters used to verify the Spacecraft level performance requirements identified in Table I of the Verification Plan. In addition, mission analysis shall be used to verify subsystem performance requirements as specified in Section 4 of the subsystem specifications. Examples of requirements verified by mission analysis include safe mode operations, pointing accuracy/stability, TONS performance, HGA–TDRSS visibility, and fault tolerance. The following general requirements apply to mission analyses:

a. Measured performance parameters taken from hardware tests shall be incorporated into analyses when available.

b. Performance parameter sensitivity shall be assessed and compared to the expected and observed variations.

c. Analyses used to verify flight software requirements shall be performed on the SDF Flight Software Testbed with final acceptance being based on the hardware/software simulator tests.

d. Analyses used to verify flight software–related requirements (e.g., GN&C pointing performance) shall be performed on the SDF Flight Software Testbed where practical unless a higher fidelity simulation is required than is available on the FSTB. Performance parameters which are sensitive to SCC timing must be tested on the FSTB.

e. Results shall be documented on Verification Reports

f. Wherever possible, simulation results shall be validated using separate simulations. Examples include comparing standalone simulations to FSTB test results (GN&C performance) or using Flight Dynamics Facility predicted parameters to validate an analysis. New analytical techniques shall be identified in the Verification Report.

7.3 Inspections

Inspections shall be performed during Spacecraft I&T to verify dimensional, interface, and workmanship parameters where identified in the Verification Plan and the Integration Plan. These inspections shall be meet the requirements specified in the Performance Assurance Implementation plan.

Alignment checks shall be performed before and after exposure of the Spacecraft to simulated environmental conditions, in accordance with the Pointing Error Budget and Alignment Plan (PN20008660). These checks are described in Section 7.4.

7.4 Environmental Testing Sequence

The Instrument I&T flow is depicted in the Verification Plan. The Spacecraft Verification Flow is depicted in Figure 15 of this document. The requirements for those tests are defined herein.

7.4.1 Trend Parameters

Measured parameters which relate to performance stability shall be evaluated at the Spacecraft level. See Section 3.6.3.1 for detailed requirements.

7.4.2 Electrical Function

Electrical function tests, both limited (Functional) and comprehensive, shall be performed at key points before, during and after the environmental portions of Spacecraft–level testing in order to confirm that Spacecraft hardware meets performance requirements and has not suffered damage as

a result of environmental exposure. These tests shall include the application of expected voltages, impedances, frequencies, pulses and waveforms at the electrical and communication interfaces of the Spacecraft. Electrical continuity and performance, response time, and other relative checks shall be performed.

During integration of the Spacecraft, electrical interface tests shall be performed to verify that all interface signals meet performance requirements. Electrical harnessing shall also be tested to verify proper characteristics, such as routing of electrical signals, impedance, isolation, and overall workmanship. All such testing and integration shall be conducted in areas which satisfy the cleanliness requirements of PN20001412. Interface verification requirements for these tests are defined in Section 7.7 of this document.

7.4.2.1 Instrument Pre–Integration Tests

Electrical functional tests to which the Instruments shall be exposed prior to integration on the Spacecraft are listed below and are described in the following paragraphs:

a. Bench Acceptance Test

7.4.2.1.1 Instrument Bench Acceptance Test (BAT)

This test shall be performed under ambient conditions (with certain exceptions) as both a quality control screen to detect deficiencies and as a basis for acceptance after the delivery of qualified payload hardware. The BAT shall be used to verify that an instrument operates as it did at the Instrument Provider's facility where it was qualified prior to shipment. The BAT shall be performed within the spatial constraints of the BAT facility at Astro Space. Instrument Provider personnel shall perform the BAT, with assistance by Astro Space personnel, if requested. Simpler targets than those used at the Instrument Provider's facility, may be used to stimulate instruments. Instrument Provider personnel shall evaluate science data and engineering telemetry, while instrument housekeeping telemetry shall be evaluated by the Instrument Provider with the assistance of Astro Space personnel. Data generated during the BAT shall be compared to the baseline data produced just prior to shipment by the Instrument Provider.

BAT testing shall include as a minimum:

a. The operation of all redundant circuitry and/or components shall be verified. This shall include verification of cross–strap paths between components.

b. All command and data paths to, from, and between components within the instrument shall be verified.

c. Performance parameters which shall be monitored for trends through the I&T program shall be evaluated. These shall be compared to the pre–ship values. These parameters shall be the responsibility of the Instrument Provider and GSFC.

d. Any other data required to determine that the instrument has not been damaged by the shipping and handling process.

7.4.2.2 Spacecraft Tests Before Instrument Integration

Electrical functional tests to which the Spacecraft Bus shall be exposed prior to instrument integration are as follows:

a. Functional Test

b. Comprehensive Performance Test

7.4.2.2.1 Functional Test

See Section 7.4.2.3.1 for details, less instrument references.

7.4.2.2.2 Comprehensive Performance Test

The Baseline Test shall be a detailed verification that the Spacecraft hardware meets performance specification requirements. In addition to verifying the operation of redundant circuitry, the Baseline Test shall be used to verify satisfactory performance in all operational and contingency modes within practical limits of cost, schedule, and environmental simulation capabilities.

(If instruments are installed) Verification of the instruments during the Baseline Test shall be through functional testing with suitable performance parameters measured to allow trend studies of instrument performance through the Spacecraft processing. Using targets to stimulate the instruments, science data, engineering telemetry, and housekeeping telemetry shall be evaluated.

For all housekeeping hardware, the Baseline Test shall be a Comprehensive Performance Test (CPT) analogous to the EM or major assembly level CPT. An initial CPT shall be performed upon the completion of integration of the Spacecraft Bus hardware. After instrument integration, a complete Baseline Test shall be performed for all instrument and housekeeping hardware. The results of this test shall serve as the baseline for comparison against all subsequent tests. The position of the Baseline Tests in the Spacecraft verification sequence can be seen in the Verification Plan. Additional Baseline Tests shall be performed during T/V testing at both a high and a low Spacecraft temperature plateau.

Requirements for the Baseline Test are as follows:

a. Functional testing and complete performance characterization for housekeeping equipment. All performance trend parameters identified in Table XIII of Appendix III shall be evaluated.

b. (If instruments are installed) Functional testing and relative performance characterization of instruments. A subset of science performance parameters which may be observed both in ambient and T/V conditions shall be evaluated.

c. All prime and redundant hardware shall be tested.

d. All cross–strap paths shall be tested.

e. All command and telemetry paths to and from each subsystem and instrument shall be tested.

f. All commands shall be executed.

g. All subsystem and instrument operational modes shall be tested.

h. All contingency modes, where practicable, shall be tested.

i. External stimuli shall be used where required.

j. Housekeeping equipment shall be tested by subsystems, with all interfaces between non–collocated hardware (e.g., GN&C Sensor and RWA modules) evaluated.

k. Flight hardware/software interfaces shall be evaluated.

l. While meeting the above requirements, housekeeping equipment tests shall be as close in configuration as possible to the EM or major assembly CPTs.

m. Test shall be performed with the Spacecraft in the –Z (Zenith) Up orientation.

7.4.2.3 Spacecraft Tests, Following Instrument Integration

Electrical functional tests to which the integrated Spacecraft shall be exposed are as follows:

a. Functional Test

b. Baseline Test

c. Launch Mode Test

d. EMC/EMI Mode Tests (RF Noisy, Electrical Noisy, Quiet)

e. Operational (Orbit) Test

f. Instrument Calibration

Requirements for the above tests are defined herein.

7.4.2.3.1 Functional Test

The Functional Test is a short form functional test which shall verify the correct electrical/mechanical response of Spacecraft hardware in its major operational modes. End–to–end evaluations of communications, clock, power, and other signals shall be verified where practicable. The test is intended to verify subsystem and instrument integrity after handling, storage, and transportation. It is not intended to be a performance test. Specific requirements are as follows:

a. External stimuli shall not be used.

b. Subsystem/instrument operating modes can be performed with the Spacecraft in any orientation (e.g., no mechanism deployments).

c. Test of a given subsystem or instrument shall not require more than three hours. Deviations shall be worked out on a case–by–case basis.

d. All components (primary and redundant) hardware shall be tested.

e. All command and data paths to and from the subsystem or instrument shall be tested.

f. All commands shall be exercised.

7.4.2.3.2 Comprehensive Performance (Baseline) Test

See par. 7.4.2.2.2 for description.

7.4.2.3.3 Launch Mode Test

The Launch Mode Test is a verification that the Spacecraft can be placed in its launch mode, and that the predicted functional characteristics of the launch mode are observed.

The Spacecraft is then placed in its launch mode by a sequence of commands to the required subsystems. Components which are to be powered during the Launch Mode Test are listed in Section 4.4.5.2.2. Telemetry from these components shall be evaluated to verify expected characteristics. No external stimuli shall be used. The Launch Mode Test shall be capable of being performed with the Spacecraft in any orientation.

7.4.2.3.4 EMC/EMI Mode Tests

EMC/EMI testing (Power Profile, Transient Tolerance, RF Compatibility, Self Compatibility) requires the Spacecraft to be placed in various functional modes, which are described below. Requirements for Power Profile, Transient Tolerance, and RF Compatibility are specified in the EMC Control Plan. The Self Compatibility test modes are described in the Operational (Orbit) Test. and the Spacecraft T/V test procedure.

7.4.2.3.4.1 Quiet (Susceptible) Mode

Subsystems or instruments shall be placed in Quiet Mode either individually or with other subsystems/instruments which are required to support various EMC/EMI tests. This mode shall have the following characteristics:

a. Subsystem/instrument shall be powered ON either prime or redundant side as required.

b. Subsystem/instrument shall be capable of being monitored for performance perturbations caused by electrical fluctuations on the power bus or by RF emissions.

c. Subsystem/instrument shall be at maximum susceptibility to power bus fluctuations and RF emissions.

d. Subsystem/instrument shall produce a minimum of RF emissions for a powered condition.

e. Subsystem/instrument shall produce a minimum of power load variation for a powered condition.

f. Subsystem/instrument shall be capable of maintaining Quiet Mode for 24 hrs in either T/V or ambient conditions.

g. Test shall be performed with the Spacecraft in the –Z Up orientation.

7.4.2.3.4.2 Electrical Noisy Mode

Subsystems or instruments shall be placed in Electrical Noisy Mode either individually or with other subsystems/instruments and required to support various EMC/EMI tests. This mode shall have the following characteristics:

a. Subsystem/instrument shall be powered ON either prime or redundant side as required.

b. Subsystem/instrument shall produce a maximum of power load variation.

c. Subsystem/instrument shall be capable of safely maintaining Electrical Noisy Mode for 30 minutes in either T/V or ambient conditions.

d. Test shall be performed with the Spacecraft in the –Z Up orientation.

7.4.2.3.4.3 RF Noisy Mode

Subsystems or instruments shall be placed in RF Noisy Mode either individually or with other subsystems/instruments and required to support various EMC/EMI tests. This mode is analogous to the Electrical Noisy mode and shall have the following characteristics:

a. Subsystem/instrument shall be powered ON either prime or redundant side as required.

b. Subsystem/instrument shall produce a maximum of RF emissions.

c. Subsystem/instrument shall be capable of safely maintaining RF Noisy Mode for 30 minutes in ambient conditions.

d. Test shall be performed with the Spacecraft in the –Z Up orientation.

Wherever possible, the RF and Electrical Noisy Modes shall be combined.

7.4.2.3.5 Operational (Orbit) Test

The Operational Test is a set of simulated orbits which shall be used to test self–compatibility of all Spacecraft elements as well as the ability of these elements to operate in nominal mode. During this test all Spacecraft subsystems and instruments are placed in their nominal modes where they shall operate concurrently. The SCC and other flight processors shall be synchronized to emulate an actual mission timeline, and all hardware elements shall follow this timeline. Requirements for the Operational Test are as follows:

a. Subsystems and instruments shall be powered ON in either a prime or redundant configuration. In the prime configuration, all elements shall use the hardware (prime) which is expected to be operating during the actual mission. In the redundant configuration, the opposite side hardware shall be used where applicable. Components without redundant hardware shall be operated during both prime and redundant configuration tests. Power and data distribution among subsystems and instruments during the A side tests shall be configured as expected for the mission. During the redundant side tests the opposite configuration shall be used.

b. Subsystems shall operate in the expected nominal mission mode to the extent possible in a ground test.

   1. GN&C attitude determination/control and TONS navigation functions shall be tested in an open–loop mode. No closed loop processing between GN&C actuators and sensors shall be required. Reaction wheels shall be operated at orbit average speeds. Periodic activation of magnetic torquers shall be used to simulate momentum unloading. Flight software control of actuators is not required. Sensors shall be placed in a self–test or otherwise susceptible operating mode using external stimuli where required.

   2. The solar array drive shall be operated in normal rotational mode. During the thermal vacuum operational tests, power shall be diverted from the SSU as required to flow current through all slip rings in the Slip Ring Assembly (SRA). This may require shunting half of the power lines out through half of the slip rings, then turning those lines around and transferring power through the remaining rings.

   3. The HGA assembly shall be placed in a standalone fixture and jumper cables shall be used to connect it to the Spacecraft interface. The HGA shall be operated in orbital mode, with the gimbal turning within the fixture under flight software control. Transmitter operations shall be simulated with the RF emissions directed into an absorbing hat. If personnel safety requirements dictate, the transmissions shall be deleted.

   4. Flight software shall operate in nominal mode with suitable configuration adjustments to compensate for the lack of sensor responses. All Spacecraft operations shall be controlled by FSW stored command loads where possible, except during test configuration changes.

   5. Data recording duty cycles shall be simulated.

c. Instruments shall operate in the expected nominal mission mode to the extent possible in a ground test.

   1. External stimulators shall be used to provide science data to the extent practicable within both ambient and T/V environments.

   2. Instruments shall telemeter data and process stored commands or data loads using duty cycles similar to the expected mission cycles.

d. The Spacecraft shall be capable of maintaining Operational mode for up to 100 hrs in an ambient or T/V environment.

e. No deployments, contingency modes, or other off–nominal operations shall be performed.

f. Test shall be performed with the Spacecraft in the –Z Up orientation.

7.4.2.3.6 Instrument Calibration

Instrument calibration shall be performed during the Spacecraft T/V Test.

The instrument calibration test shall provide a calibration of the instrument science parameters. In addition, the calibration test shall include a comprehensive performance test of the instrument to verify that performance has not been affected by Spacecraft integration.

Instrument calibration shall be performed with the instrument integrated to the Spacecraft and all other instruments and housekeeping subsystems in their normal operational modes to the extent practical. The test shall be performed at hot and cold plateaus during the Spacecraft T/V test as defined in this document.

Instrument temperatures will be controlled as in flight. The calibration sources, procedures, and IGSE used will be GFE. Additional requirements for this test will be levied by the Instrument provider.

7.4.3 Alignment

Upon completion of instrument standalone testing, instruments shall be installed upon the Spacecraft structure and aligned in accordance with the individual instrument UIIDs. Subsequent alignment checks shall be performed before and after exposing the Spacecraft to simulated environmental conditions. These alignment checks shall be performed in accordance with the Pointing Error Budget and the Alignment Plan (PN20008660).

7.4.3.1 Test

The Roll, Pitch, and Yaw axis orientations of each instrument shall be determined relative to those of the alignment cube on the GN&C optical bench. If the bench cube is not visible in a given orientation, the external reference cube shall be used. Gravitational effects shall be minimized by performing this test with the Spacecraft in its vertical (+X axis up) orientation.

7.4.4 CPHTS Performance (Ambient)

The Capillary Pumped Heat Transport System (CPHTS) assemblies will undergo thermal performance testing in ambient pressure conditions as identified in the Verification Plan. The performance tests shall confirm proper operation of the two–phase ammonia loops using either the flight instrument or a thermal simulator of the instrument to provide the heat load and the radiator

assemblies to reject the heat load. Ground support equipment will provide supplemental cooling for the radiators. The Spacecraft shall be oriented to provide gravity conditions which best simulate those which the assemblies will experience on orbit. Additional precautions shall be taken to prevent fluid leakage and exposure to test personnel during this testing.

7.4.5 EMC Tests

The performance of the Spacecraft shall be verified for electromagnetic compatibility in accordance with the requirements of the EOS Spacecraft EMC Control Plan (PN20005869). See Paragraph 7.4.2.3.4 of this document for additional details.

7.4.6 Thermal Balance/Thermal Vacuum Test

The Spacecraft–level Thermal Balance and Thermal Vacuum tests will be combined in order to reduce the overall cost and risk of environmental testing. The test profile for the thermal balance/thermal vacuum portion of the Spacecraft protoflight testing is shown in Figure 8.

7.4.6.1 General

7.4.6.1.1 Thermal Balance

The Thermal Balance test confirms the accuracy of the Spacecraft analytical thermal model and validates the thermal control hardware design. This test shall simulate the thermal conditions predicted to be the most critical for the thermal control subsystem.

The analytical thermal model, which simulates all major EOS Spacecraft hardware, shall be exercised using the nominal and worst–case scenarios described below. This model shall be modified to reflect test conditions and used to predict performance of the thermal control subsystem during the test. Correlation of the analytical predictions with the thermal balance test results shall serve to refine and validate the analytical model. Following correlation, the analytical model shall be used to predict the on–orbit thermal performance of the Spacecraft.

The analyses and testing of worst–case scenarios shall include, but not be limited to the following:

a. Maximum external absorbed flux plus maximum internal power dissipation predicted during the Spacecraft normal operational profile.

b. Minimum external absorbed flux plus minimum internal power dissipation predicted during the normal Spacecraft operational cycle.

The analysis shall consider the following factors: surface reflections, infrared emission emanating from the Spacecraft, shadowing, and changes in the solar absorptance/emittance ratio of thermal control surfaces due to degradation in orbit .

7.4.6.1.2 Thermal Vacuum

Thermal Vacuum testing shall verify the capability of the Spacecraft to meet performance specification requirements while subjected to nominal and worst–case operating conditions. During T/V testing, functional tests of the Spacecraft shall be performed as described herein.

(Replace with fig8)

Figure 8. Spacecraft Thermal–Vacuum Test Profile

The Spacecraft shall be subjected to a minimum of four T/V thermal cycles. Thermal cycling shall subject the Spacecraft to temperatures 10°C above and below the predicted temperature extremes which the Spacecraft will experience on orbit. During and after this exposure, the Spacecraft shall demonstrate satisfactory performance.

7.4.6.2 Precautions

The general precautions defined in Section 3.6.8.3 apply to the Spacecraft Thermal Vacuum/Balance Test. All temperature transition rates shall simulate the predicted orbital transition rates to within the capability of the thermal facility.

7.4.6.3 Test Set–Up

Because of spatial limitations within the thermal vacuum chamber, some of the Spacecraft payloads may be physically separated from (but still functionally connected to) the Spacecraft during Spacecraft–level thermal balance/thermal vacuum testing. Prior to the initiation of testing, a readiness check shall be performed to confirm functionality of the connections between the Spacecraft and any items physically separated.

Assemblies which shall be physically separated from the Spacecraft are:

a. HGA – This assembly shall be in a standalone fixture which allows gimbal rotation and electrical jumpers shall be used to connect the assembly to the Spacecraft interface.

b. Solar Array – This assembly shall not be present. Power shall be provided from the Solar Array Simulator into the chamber to the SSU.

c. SSU – This assembly shall be mounted on a standalone bench. Half of the power lines shall be diverted from the SSU out through the SRA in the S/A drive, then back in through the SRA so that all slip rings are used. The remaining lines shall be diverted around the S/A drive.

The location of temperature sensors and the layout of support equipment in the chamber shall be described in the T/V test procedure. The pre–test temperature predictions shall have been calculated using the thermal analytical model of the Spacecraft which has been modified to reflect the test configuration.

Note: Workhorse batteries will be used during Spacecraft T/V testing. The flight batteries will be installed after acoustic exposure. Careful attention shall be given to battery management, especially at the temperature extremes.

Prior to testing, a readiness check of the thermal vacuum chamber shall be performed which includes the following:

a. Installation and checkout of all cables, fixtures, targets, heater controls and monitoring devices

b. A dry–run of pumping–down the chamber with a verification of achieving high and low temperature plateaus. Witness plates shall be included for detection of contamination.

External thermal boundary conditions resulting from orbital thermal effects on the Spacecraft and its major assemblies shall be induced in the test chamber by simulating solar and Earth irradiation. Internal thermal boundary conditions shall be induced by the use of actual flight hardware with resistance heater elements to supplement internal dissipation, if necessary. Component heat dissipation and harness line losses shall be measured to an accuracy of 1%, wherever feasible.

The thermal vacuum test chamber and set–up shall be calibrated to determine the direction, intensity and spectral content of the significant energy sources and effective heat sink temperature. Calibration shall be obtained by direct measurement, analysis, or a combination of methods. The resulting energy parameters determined for the test condition and test item configuration shall be used with the analytical model to predict nodal temperatures for test chamber conditions prior to the test. The test configuration, including the Spacecraft, instrumentation and placement of test fixtures in the test chamber shall reflect the conditions input to the analytical model for pre–test predictions to ensure verification. Simulated energy balance conditions shall be sufficient to verify thermal design.

7.4.6.4 Test

The test levels and duration for the thermal vacuum portion of the Spacecraft protoflight testing are shown in Figure 8. The test profile shown has been modified to include thermal balance testing. The Spacecraft shall be subjected to a minimum of four thermal cycles.

The thermal test stabilization conditions and requirements shall be defined in the applicable test plans and procedures. The Spacecraft shall be operated throughout the test and critical temperatures shall be monitored continuously. Operations shall include all applicable mission modes which may result in differences in thermal behavior, and shall be sufficient to demonstrate Spacecraft operability during nominal and all worst–case thermal conditions. All redundant elements shall also be exercised during this testing.

7.4.6.4.1 Pumpdown and Bakeout

After the Spacecraft has been installed in the T/V chamber and support equipment has been configured for T/V testing, a Spacecraft Aliveness Test shall be performed prior to chamber evacuation. Additional tests may be performed if required to verify GSE and test equipment prior to pumping down the chamber. The Spacecraft shall then be configured into Launch Mode and the chamber shall be evacuated to less than 7.5×10^{-3} torr to simulate the pressure profile of ELV–powered flight within the constraints of the chamber facility. During this pumpdown, the Spacecraft shall be monitored for electrical discharge and launch mode characteristics shall be monitored in telemetry. Components which are powered on during launch are shown in Table XII.

Provided that no electrical discharge is detected, the chamber shall be evacuated to a pressure of less than 1×10^{-5} torr and maintained for the duration of T/V testing. Following pumpdown, the remaining housekeeping subsystems shall be powered ON, and a Spacecraft functional test shall be performed. The Spacecraft shall then be heated using both internal (component) and external (shroud) heat sources in order to bakeout exposed surfaces such as MLI and other thermal control surfaces. The Spacecraft shall be heated to temperatures which correspond to the upper qualification

temperature. The bakeout conditions shall be maintained until contaminant release has ceased or for a minimum duration of eight hours. Molecular contamination within the chamber shall be monitored with a Temperature–controlled Quartz Crystal Microbalance (TQCM) during T/V testing. The outgassing rate of Spacecraft materials shall be determined by TQCM measurements and shall conform to requirements in the EOS Spacecraft Contamination Control Plan (PN20001412).

During the pumpdown and bakeout process, thermal control of the chamber shrouds will be used as required to maintain all flight hardware within its qualification temperature limits. An analysis shall be performed prior to the test to determine the required shroud control parameters, and these parameters shall be documented in the thermal vacuum pumpdown test procedure.

7.4.6.4.2 Thermal Balance

After completing bakeout, the Thermal Balance tests shall begin by adjusting the T/V chamber temperature and reconfiguring the Spacecraft in order to simulate the worst–case hot scenarios. These scenarios will require simulation of the maximum external absorbed flux in combination with the maximum internal power dissipation predicted for specifically defined cases. These conditions shall be maintained until the Spacecraft reaches temperature stabilization. Temperature readings throughout the Spacecraft shall be closely monitored and recorded for post–test correlation of the thermal analytical model.

After simulating the worst–case hot scenarios, the worst–case cold scenarios shall be simulated by lowering the chamber temperature and reconfiguring the Spacecraft again. The worst–case cold scenario requires simulation of the minimum external absorbed flux in combination with the minimum internal power dissipation predicted for specifically defined cases. These conditions shall be maintained until the Spacecraft reaches temperature stabilization. Temperature readings throughout the Spacecraft shall be closely monitored and recorded for post–test correlation of the thermal analytical model.

Further Thermal Balance testing shall be performed, if the test results indicate that more data is required for model correlation. Otherwise, T/V testing shall proceed to thermal cycling as described below.

7.4.6.4.3 Thermal Cycling

The following sequence shall be employed for Spacecraft thermal cycling in T/V (see Figure 8):

a. **Cycle 1, High Temperature** – After completing the Thermal Balance tests, the temperature of the chamber shall be increased to cause the Spacecraft to stabilize at 10°C above the maximum operating temperature predicted for on–orbit. (Criteria for temperature stabilization and the locations at which the governing temperatures shall be measured shall be included in the test procedure.) During this (and all) transitions, all instruments shall be powered, and orbital simulations or portions of the CPT will be run.

   Note: The temperature transition rate during this phase shall be the "worst–case" expected on–orbit (10°C per hour), and all temperature–sensitive components shall be operated during the transition. Specific criteria for where to measure the temperature for control of the transition rate shall be listed in the T/V test procedure.

After temperature stabilization has been achieved at the upper qualification temperature, the Spacecraft components shall be turned off and hot start capability shall then be demonstrated, two successive times, with sufficient time provided for restabilization of the upper qualification temperature (details to be defined in the test procedure). After completion of the hot start demonstration, a portion of the Comprehensive Performance Test (CPT) shall be performed in order to ensure that the Spacecraft is functioning properly. Instrument–unique sensor calibration checks will also be run. (Note: The second hot start demonstration may be run during a subsequent cycle.)

Note: During T/V cycling, a portion of the CPT will be performed during each cycle's high and low plateaus, and during transitions. On a cumulative basis, one full CPT will be performed at the high temperature level, and one full CPT at the low temperature level.

The high temperature plateau shall be maintained for 16 hours, during which the following EMC tests shall be performed:

1. Transient Tolerance
2. Power Profile

b. **Cycle 1, Low Temperature** – At the conclusion of the high temperature exposure, the temperature of the T/V chamber shall be decreased until the Spacecraft stabilizes at the lower qualification level, which is 10 degrees below the minimum operating temperature predicted for on–orbit.

Note: The temperature transition rate during this phase shall be the "Worst–Case" expected on–orbit (10°C per hour). During this transition, all instruments shall be powered, and all temperature–sensitive components shall be operated. Specific criteria for where to measure the temperature for control of the transition rate shall be listed in the T/V test procedure.

Cold start capability shall then be tested. Following the details of the test procedure, the applicable components shall be powered off, permitting the temperature to reach, but not fall below, the lower qualification level. Then perform the cold start test, two times. Note: The second cold start test may be performed during a subsequent cycle.

All component redundant sides shall be tested, separately if necessary.

The details of Spacecraft configuration, the use of survival heaters, chamber wall temperatures, etc., shall be described in the T/V test procedure. Criteria for determining Spacecraft temperature shall also be listed in the T/V test procedure.

Under no conditions shall any component be permitted to reach a temperature which is below its lower survival limit.

During the cold start test each test element shall demonstrate the ability to operate.

After completing the cold start demonstrations, the low temperature plateau shall be continued by returning to stabilization at the lower qualification temperature and maintaining these conditions for the remainder of the 16–hour duration. Another CPT portion shall be performed and instrument–unique sensor calibration checks shall be run.

c. **Cycle 2, High Temperature** – The temperature of the chamber shall then be increased until the Spacecraft stabilizes at the upper qualification temperature. That plateau shall be maintained for 16 hours, during which Spacecraft Operational modes shall be checked out, and EOC data flow testing shall be performed. During this testing, the EOC shall receive and process telemetry from the Spacecraft through an ECOM link. (See Section 9).

d. **Cycle 2, Low Temperature** – At the conclusion of the high temperature exposure, the temperature of the T/V chamber shall be decreased until the Spacecraft stabilizes at 10° C below the minimum operating temperature predicted for on–orbit. The Spacecraft shall remain in its Operational (Orbit) mode configuration during the transition and the subsequent low temperature exposure, which shall last for a minimum of sixteen hours.

   During the Operational cycle at the low plateau, the EOC data flow testing shall be performed. The EOC shall receive and process telemetry from the Spacecraft through an ECOM link, as discussed in Section 9.

e. **Cycle 3, High Temperature** – The temperature of the chamber shall then be increased until the Spacecraft stabilizes at the upper qualification temperature. That plateau shall be maintained for 16 hours, and CPT testing shall be performed.

f. **Cycle 4, Low Temperature** – At the conclusion of the high temperature exposure, the temperature of the T/V chamber shall be decreased until the Spacecraft stabilizes at 10° below the minimum operating temperature predicted for on–orbit. The plateau shall be maintained for 16 hours, during which CPT testing shall be performed.

g. **Contamination Prevention Half–Cycle** – Upon completion of the low temperature exposure, an additional half cycle shall be performed. During this half cycle. the chamber temperature shall be increased to stabilize the Spacecraft at 35°C. The Spacecraft shall be maintained at this temperature for six hours.

h. **Aliveness Test** – The chamber shall then be brought to ambient temperature and pressure, and the Spacecraft shall then undergo an Aliveness Test.

7.4.7 Acoustic Test

7.4.7.1 General

The Acoustic Noise Test shall expose the Spacecraft to a protoflight–level dynamic environment, which is 3 dB higher than that expected when the Spacecraft is launched. A visual inspection and functional testing shall be performed before and after the test in order to assess the affect of acoustic noise on the Spacecraft. In addition, pre– and post–test alignment measurements shall verify launch shift of instruments.

7.4.7.2 Measurement and Instrumentation

The general requirements specified in Section 3.6.7 apply to the Spacecraft Acoustic Test.

7.4.7.3 Precautions

The acoustic facility shall meet all I&T contamination (Class 10,000) requirements. Witness plates shall be installed near all contamination–sensitive apertures and on representative horizontal surfaces. Prior to and after the test, these plates shall be evaluated to verify the deposition requirements of the Contamination Control Plan.

Prior to installation of the Spacecraft into the chamber, a trial run shall be be performed to verify the dynamic control equipment and procedures. Witness plates shall be examined to establish the cleanliness of the test process.

7.4.7.4 Test Set–Up

The Spacecraft shall be installed in an acoustic cell capable of generating launch sound pressure levels. There shall be a uniform sound energy density throughout the chamber. Normally sealed components shall be pressurized during the test to their prelaunch pressure. The Spacecraft shall be oriented with the +X axis up on the flight adapter ring.

7.4.7.5 Test Level

Initially, the Spacecraft shall be subjected to low level "shaping runs." Then the Spacecraft shall be subjected to a protoflight acoustic exposure which is 3 dB higher than the maximum expected acoustic levels shown in the GIS, across the full frequency spectrum. The duration of exposure shall be one minute.

7.4.7.6 Test Item Operations

All deployable appendages shall be installed and placed in launch configuration. After transport to the acoustic facility, the Spacecraft shall undergo an Aliveness Test, following which it shall be placed in Launch Mode. The Spacecraft shall remain in this mode during the acoustic exposure. After the exposure, the Aliveness Test shall be repeated.

Baseline and alignment tests shall be performed before and after the acoustic test as identified in the Verification plan.

7.4.8 Shock

7.4.8.1 General

Shock tests demonstrate the capability of flight hardware to withstand and/or operate in a predicted shock environment. In addition, shock response measurements are taken and compared to the component level shock environments in order to ascertain if the imposed levels are potentially damaging to the components. The two general types of shock induced environments are described below.

7.4.8.1.1 Self–Induced Shock

Self–induced shocks occur when pyrotechnic and pneumatic devices are actuated to release booms, solar arrays, protective covers, etc. In addition, the impact of deployable devices as they reach their operational position ("end–of–travel") is a likely source of significant shock. All deployable devices shall be activated at the Spacecraft level at least twice to account for scatter associated with each actuation of the same device. The shock spectrum will vary depending upon the pyro configuration and the distance from the shock source, therefore the shock spectrum will be derived on a case by case basis.

7.4.8.1.2 Externally Induced Shock

Externally–induced shock originates from launch vehicle separation or from transportation and handling operations. However, the dominant source of externally–induced shock is from launch vehicle separation. The Spacecraft shall be subjected to at least two firings of the launch vehicle separation system.

7.4.8.2 Test

Spacecraft shock testing shall be performed by firing all pyrotechnically activated release mechanisms a minimum of two times. The shock effects of firing deployment pyrotechnics shall be recorded during this test. This test shall be performed coincident with the Spacecraft deployment check, because deployment should occur after the pyros have been fired. Accelerometers shall be used to measure shock response which shall meet the spectrum defined in the General Interface Specification.

7.5 Demonstrations

The following demonstrations shall be performed at the Spacecraft level in order to verify the operational capability of the fully integrated Spacecraft.

7.5.1 Mechanical Function (Deployment)

A limited deployment of the Solar Array and the High Gain Antenna shall be performed. This is to ensure that the appendages are unrestrained and can deploy freely. This will be coincident with the internal shock test which notes the effects of firing the deployment pyrotechnics.

7.5.1.1 Precautions

The results of the static and kinematic analyses described in Section 7.2.1 shall be used to guide mechanical demonstrations to ensure that the safe operating conditions for deployable mechanisms shall not be exceeded.

7.5.2 Solar Array Full Deployment

A full deployment of the Solar Array shall be performed after environmental exposure, including inspection of solar cells, interconnections, etc.

7.5.3 Leakage

Leak checks of all pressurized elements shall be performed before and after subjecting the Spacecraft to the stress–inducing portions of the environmental test program as shown in the Verification Plan. These checks may be conducted while the test item is in either an operating or non–operating mode. Leak checks shall be conducted under steady–state conditions. Adequate precautions shall be taken to prevent injury to test personnel or damage to the Spacecraft during these checks. Leakage rates shall be within prescribed mission limits as specified in the pertinent performance specification.

7.5.4 Trouble–Free Operations

Prior to shipment to the launch facility, the Spacecraft shall demonstrate reliable operation by completing over 100 hours of consecutive trouble–free performance testing as identified in the Verification Plan. This test shall be a continuous Operational (Orbit) Test during which the Spacecraft shall operate as defined in Section 7.4.2.3.5.

For this test trouble–free operations are defined as operations devoid of flight hardware failures.

7.6 Mass Properties

The mass and center of mass of the Spacecraft shall be measured/determined. Moments and products of inertia shall be determined in order to predict Spacecraft performance during launch, ascent and on–orbit operation.

Mass properties for the three orthogonal axes of the Spacecraft shall be measured or developed by analytically combining data acquired from measurements at the major assembly/component level. The tolerances specified in Table VIII shall be applicable for the Spacecraft.

7.7 Interface Verification

Spacecraft internal interface requirements are specified in the General Interface Specification. Interface requirements between the Spacecraft and the instrument set are specified in the General Instrument Interface Specification and the Instrument UIIDs. Launch Vehicle interfaces are specified in the Launch Vehicle IRD, IS20008503. External interfaces are specified in the EOS–to–SN and EOS–to–GN ICDs. These requirements shall be verified in four ways:

a. Interfaces which affect testable performance parameters of the Spacecraft shall have final verification upon Spacecraft level testing as described in Section 7.4.

b. Interfaces for which no higher level performance test exists, or for which any of the following conditions are present, shall undergo interface verification tests and/or inspections prior to integration with other hardware elements. These shall be performed during the Spacecraft I&T cycle.

    1. Damage could result from integration/installation activities for which interface parameters are not met.

2. Anomalies would be difficult to isolate or correct if detected at the integrated level.

c. Mechanical external interfaces to the Launch Vehicle shall be verified by environmental testing of the Spacecraft Core Assembly described in Section 6 and the Spacecraft level tests, inspections and analyses described in Section 7.

d. External interfaces to the SN and GN systems shall be verified during compatibility and End–to–End testing described in Section 9.

Interface parameters which fall into classification "b" above, and their interface verification requirements, are specified in the performance specifications of the Equipment Modules and other Major Assemblies. These interfaces may be mechanical, thermal, or electrical.

7.7.1 Internal Interfaces – Spacecraft Bus

Interfaces among EMs and other major assemblies within the Spacecraft Bus are verified during the initial assembly and integration phase of I&T. These interfaces shall be verified as specified in the Test Plans of the individual EMs and Major Assemblies.

7.7.2 External Interfaces – Spacecraft Bus to Instrument

Interfaces between the Spacecraft Bus equipment and the instrument set are verified during the instrument integration phase of I&T. These interfaces shall be verified as specified in the General Instrument Interface Specification (GSFC 420–03–02) and the Comprehensive Test Plan (PN20008664).

7.7.3 External Interfaces – Spacecraft to Launch Vehicle

The various interfaces between the Spacecraft and the launch vehicle shall be described in IS20008503, Interface Requirements Document for EOS–AM to Intermediate Launch Vehicle.

8 SOFTWARE

8.1 Requirements

Software shall be developed and verified according to the requirements of the documents listed below:

a. PN20008655 EOS AM Spacecraft Software Management Plan

b. 20001422 EOS–AM Spacecraft Software Development Plan

c. 20008633 Software Requirements for EOS Subcontractors

8.2 Verification

All software requirements shall be verified according to the test plan for each S/W element (DR: VRD–710). I&T procedures shall be defined for each CSCI for each S/W element (DR: SD–114). Acceptance Test Procedures shall be defined for each S/W element (DR:SD–120).

The Software Acceptance Phase shall formally test the software to demonstrate compliance with the requirements of the applicable specification. At the end of the Software Acceptance Phase, the Software Acceptance Review (SWAR) shall be held.

Subsequent to SWAR completion, software–to–hardware interfaces shall be verified during S/C level tests, as described in Section 7.

(This page intentionally left blank.)

9 END–TO–END VERIFICATION

9.1 General

End–to–End verification is accomplished by a series of tests and simulations. The tests which directly involve the Spacecraft include Spacecraft–to–network compatibility tests, end–to–end compatibility tests, mission simulations, operational readiness tests, and DAS compatibility tests. Requirements for those tests are specified herein. (Simulations and link tests which do not directly involve the Spacecraft are not covered in the following discussion.)

9.2 Spacecraft–to–Network Compatibility Test

The purpose of the test is to verify the RF interface compatibility between the Spacecraft communications subsystem and the Space Tracking and Data Network (STDN), Wallops Flight Facility (WFF), and the Deep Space Network (DSN). The requirements for these tests are summarized below:

a. All command, telemetry, stored data dump, and SCC memory dump configurations shall be demonstrated.

b. All communication modes specified in the CEI Specification will be demonstrated. For each of the communication modes, the following criteria shall be checked:

   1. Frequency and phase stability
   2. Modulation factor
   3. Power output
   4. Verification of correct equipment response to modulated Spacecraft signal
   5. Determination of Spacecraft sensitivity to various interference signals
   6. Verification of automatic acquisition techniques.

c. Bit error rates and link margin contributions shall be verified.

d. TONS support functions shall be verified.

9.3 End–to–End Compatibility Test

This test is an extension of the compatibility tests described above. The key ground elements and the flight segment will be linked. This test shall include ECOM link tests between the Spacecraft and EOC during I&T ambient tests, and a pre–ship CTV/TDRS link test. The ability to send S/C telemetry from the Spacecraft at VAFB to EOC shall also be verified.

The requirements for these tests are summarized below:

a. All command, SCC load, and microprocessor load functions shall be exercised from the EOC to the Spacecraft.

b. All telemetry and data from the Spacecraft shall be flowed to the appropriate destinations within the EOC and the ESDIS ground elements.

c. All communication modes and links shall be exercised.

9.4 Mission Simulation

The Mission simulation shall be conducted after the end–to–end compatibility test. Data flow tests shall be performed utilizing the total Spacecraft system in a realistic mission timeline, including external stimulus of the instruments and attitude control sensors, when practical. Telemetry and command demonstrations shall be conducted, incorporating all the required equipment, appropriate network elements (ECOM, EOC, instrument control centers, and data processing facilities), and the instrument support terminals. Once the data flow paths have been verified, mission simulations shall be held to validate nominal mission operating procedures, where practical, and to provide for operator familiarization training.

Requirements for the mission simulation test are summarized below:

a. Command, telemetry, and procedure databases shall be validated via ground communication between Astro Space at East Windsor, New Jersey, and EOC at GSFC.

b. Network shall be confirmed as operational and initialized.

9.5 Operational Readiness

The operational readiness tests shall be performed in parallel with Spacecraft testing using the SIM or similar simulator as described in the Verification Plan. These simulations shall include:

1. Attitude support functions
2. Maneuver planning and operational support
3. Ground–based definitive orbit determination
4. Monitoring of onboard definitive orbit data and onboard navigation system
5. Flight data recorder playback and management
6. High–rate science telemetry handling
7. Real–time data delivery services
8. Non–real–time data delivery services
9. Scheduling of various types of data products

10. Routine operations, such as Spacecraft command and control, and interactions between ground elements
11. Recovery from safe mode
12. Orbit adjusts
13. HGA operations

9.6 DAS Compatibility

Compatibility between the Direct Access System (DAS) and the Spacecraft shall be verified during the RF subsystem portion of the Spacecraft comprehensive performance tests.

The requirements for the DAS compatibility test are summarized below:

a. Direct Downlink functions shall be verified

b. Direct Broadcast functions shall be verified

c. Direct Playback functions shall be verified

The following performance and compatibility criteria shall be measured, where possible, as part of verification of the three major functions listed above:

a. Phase non–linearity

b. Amplitude Modulation (AM) /phase modulation (PM)

c. AM/AM

d. Incidental amplitude modulation (AM)

e. Gain slope and flatness

f. Output channel performance characteristics and bandwidth

g. Out–of– band power and spurious out–of–band

h. Untracked spurious PM

i. Phase and gain imbalance

j. Signal–to–noise plus spurious ratio

k. RF output power

l. Phase noise

m. Center frequency and frequency stability

n. Output signal performance characteristics

o. Master oscillator signal

(This page intentionally left blank.)

APPENDIX I

10 ABBREVIATIONS AND ACRONYMS

ADR	Automated Discrepancy Report
AM	Amplitude Modulation
A/R	As Required
ASD	Accelerational Spectral Density
BAT	Bench Acceptance Test
BER	Bit Error Rate
B/L	Baseline
BOL	Beginning of Life
BRF	Band Reject Filter
CCHP	Constant Conductance Heat Pipe
CDHS	Command and Data Handling Subsystem (also C&DHS)
CEI	Contract End Item
CG	Center of Gravity
CMD	Command
COMS	Communications Subsystem
CPHTS	Capillary Pumped Heat Transfer System
CPT	Comprehensive Performance Test
CRA	Central Radiator Assembly
CTV	Compatibility Test Van
DAS	Direct Access System
DB	Direct Broadcast
DCU	Data Control Unit
DEU	Deployment Electronics Unit
DMU	Data Memory Unit
DSN	Deep Space Network
DP	Direct Playback
EAS	Electrical Accommodations Subsystem
ECI	Earth Centered Inertial
ECOM	EOS Communications

EDM	Engineering Development Model
ELV	Expendable Launch Vehicle
EM	Equipment Module
EMC	Electromagnetic Compatibility
EMI	Electromagnetic Interference
EOC	EOS Operations Center
EOL	End of Life
EOS	Earth Observing System
EPC	Electrical Power Conditioner
EPS	Electrical Power Subsystem
EPT	Environmental Performance Test
ESA	Earth Sensor Assembly
ESDIS	Earth Sciences Data and Information System
ESE	Earth Sensor Electronics
ESH	Earth Sensor Head
ETE	End–To–End (Test)
ETM	Engineering Test Model
FDLC	Final Design Load Cycle
FMECA	Failure Modes, Effects, and Criticality Analysis
FOV	Field of View
FRB	Failure Review Board
FSE	Flight Support Equipment
FSTB	Flight Software Test Bed
FSW	Flight Software
F/W	Firmware
FWD	Forward
GFE	Government Furnished Equipment
GIS	General Interface Specification
GIIS	General Instrument Interface Specification
GN	Ground Network
GN&C	Guidance, Navigation, and Control
g_{RMS}	Gravity Root Mean Square

GSE	Ground Support Equipment
GSW	Ground Software
HCE	Heater Control Electronics
HGA	High Gain Antenna
H/K	Housekeeping
HP	Heat Pipe
HR	High Rate
Hz	Hertz
H/W	Hardware
I&T	Integration and Test
IAS	Instrument Accommodation Structure
ICD	Interface Control Document
I/F	Interface
IGSE	Instrument Ground Support Equipment
IR	Infrared
IRU	Inertial Reference Unit
IVT	Interface Verification Test
LET_{th}	Linear Energy Transfer Threshold
LV	Launch Vehicle
MEOP	Maximum Expected Operating Pressure
MLI	Multi–Layer Insulation
MPS	Megabit per Second
MS	Margin of Safety
N/A	Not Applicable
NASA	National Aeronautics and Space Administration
NASCOM	NASA Communications
NCG	Non–Condensable Gas
NDT	Non–Destructive Testing
NTE	Not to Exceed
NVR	Non–Volatile Residue
OSR	Optical Solar Reflector
PAIP	Performance Assurance Implementation Plan

PAR	Product Assurance Requirements Document
PB	Playback
P/P	Power Profile
PM	Phase Modulation
PM	Propulsion Module
PMP	Payload Mounting Plate
PROPS	Propulsion Subsystem
QTM	Qualification Test Model
RCV	Receive
RD	Requirements Document
RF	Radio Frequency
RT	Real Time
RTN	Return
S/A	Solar Array
SAD	Solar Array Drive
SAS	Spacecraft Analysis System
SDF	Software Development Facility
SE&I	Systems Engineering and Integration
S/C	Spacecraft
SCC	Spacecraft Controls Computer
SEU	Single Event Upset
SIM	Spacecraft Simulator
SMS	Structures and Mechanisms Subsystem
SN	Space Network
SDF	Software Development Facility
SRA	Slip Ring Assembly
S/S	Subsystem
SSST	Solid State Star Tracker
SSU	Sequential Shunt Unit
STDN	Space Tracking and Data Network
S/W	Software
SWAR	Software Acceptance Review

TAM	Three–Axis Magnetometer
TBD	To Be Determined
TBR	To Be Reviewed
TBS	To Be Specified
T/C	Thermal Cycle
TCS	Thermal Control Subsystem
TDM	Thermal Demonstration Model
TDRS	Tracking Data and Relay Satellite
TDRSS	Tracking and Data Relay Satellite System
TLM	Telemetry
TMM	Thermal Math Model
TONS	TDRSS On–Board Navigation System
TQCM	Temperature–controlled Quartz Crystal Microbalance
TRR	Test Readiness Review
T/T	Transient Tolerance
T/V	Thermal Vacuum
UUT	Unit Under Test
VCHP	Variable Conductance Heat Pipe
VLC	Verification Load Cycle
WFF	Wallops Flight Facility
WTS	Wallops Tracking Station

(This page intentionally left blank.)

APPENDIX II

20 DEFINITIONS

The following section provides definitions for verification–related terms to be used in EOS–AM performance verification documents, including this document, the Verification Plan, the Comprehensive Test Plan, and all performance and interface specifications. Additional definitions may be provided in those documents for terms not covered herein.

Acceptance Tests: The tests that demonstrate that hardware is acceptable for flight, given that the design of the hardware has been qualified to the anticipated mission. These tests also serve as a quality–control screen to detect deficiencies and normally provide the basis for delivery of an item under terms of a contract. Acceptance tests include performance demonstrations and environmental exposures to screen out manufacturing defects, workmanship errors, incipient failures, and other performance anomalies not readily detectable by normal inspection techniques or through ambient functional tests.

Acceptance Hardware: Flight hardware requiring acceptance tests. Flight acceptance hardware is exposed to environmental test levels which are essentially equal to predicted flight exposure levels.

Acoustic Noise: See "Vibroacoustics."

Aliveness Test: A subset of the functional test. This test verifies aliveness of redundant hardware in subsystems and instruments, and demonstrates redundant power and signal paths to major components. Does not exercise every command. Proper telemetry response is verified for the issued commands, and for the standby mode. External stimuli are not used.

Analysis: Analysis is defined as a verification method which utilizes techniques and tools such as math models, prior test data, simulations, or analytical assessments to confirm that the flight hardware will perform its intended function with margin. Whenever possible, test data shall be used to validate the analytical techniques used for verification.

Bench Acceptance Test (BAT): A test meeting the definitions of both an acceptance test and a bench test.

Bench Test (BT): A test of a subsystem, instrument, or module, involving components and test equipment which are electrically interfaced through harnesses or test cables but which are not installed in a flight configuration.

Component: A functional/physical subdivision of a subsystem or major assembly which performs a function necessary for operation of the subsystem or major assembly. Usually the item is a self–contained unit comprising parts and assemblies. Examples are S–band transponders, star trackers and batteries.

Definitive: A reference to characteristics of a system element which have been verified by test, flight, or other observed data and required analysis.

Demonstration: Demonstration is a qualitative verification method that evaluates the properties of the component, major assembly, or subsystem by observation. Demonstration is used with or without special test equipment or instrumentation to verify required characteristics.

Design Specification: Generic designation for a specification which describes functional and physical requirements for an article, usually at the component level. In its initial form, the design specification is a statement of functional requirements with only general coverage of physical and test requirements. The design specification evolves through the project life cycle to reflect progressive refinements in performance, design, and test requirements. Design specifications provide the basis for the technical and engineering management control.

Electromagnetic Compatibility (EMC): The condition that prevails when various electronic devices are performing their functions according to design in a common electromagnetic environment.

Electromagnetic Interference (EMI): Electromagnetic energy which interrupts, obstructs, or otherwise degrades the limits of effective performance of electrical equipment.

Electromagnetic Susceptibility: Undesired response by a component, subsystem, or system to conducted or radiated electromagnetic emissions.

Engineering Development Model (EDM): A test model used to prove design principles and to produce engineering data for detailed design. EDM's generally provide a subset of the form, fit, or function of flight hardware, as required to achieve the above engineering objectives. EDM's are built to controlled drawings where possible but do not require adherence to flight hardware specifications or process control.

Engineering Test Model (ETM): A test model used to prove design principles and to produce engineering data for detailed design. ETM's generally provide the form, fit, and function of flight hardware. ETM's are built to controlled drawings but do not require adherence to flight hardware specifications or process control.

Equipment Module (EM): A modular building block containing Spacecraft flight hardware, including subsystems and/or components, harnesses, thermal hardware, and other elements collocated in a structural unit which can be assembled and tested separately from other Spacecraft modules. EOS–AM equipment modules include the GN&C Sensor EM, Reaction Wheel Assembly EM, Recorder EM, Power EM, and Communications/C&DH EM. Note that not all hardware for a given subsystem must be located in a single EM, nor does a given EM have to contain only hardware from a single subsystem. For verification purposes the battery panel assemblies shall be treated as EMs in this specification.

Flight Hardware: Hardware to be used operationally in space. It includes instruments, experiments, and Spacecraft bus hardware.

Flight Quality Hardware: Hardware built to the same design, process and material specifications as flight hardware, regardless of intended use. Some examples of flight quality hardware are protoflight hardware, acceptance hardware, and spare hardware (as defined below).

Flight Support Equipment (FSE): Hardware which provides services that facilitate operation of the flight segment during the launch and/or insertion phases. FSE is by definition flight hardware.

Ground Support Equipment (GSE): Hardware which provides services that facilitate operation of the flight segment on the ground. Some examples could be a power supply, support structures (fixtures, cradles), checkout software, and supplemental cooling.

Spacecraft Bus: The integrated assemblage of subsystems and major assemblies which provides all housekeeping resources and services necessary to support the operations of a payload set. These include mechanical support and alignment; attitude control; guidance and navigation; electrical power; thermal control; command and data handling, and orbit maintenance.

Inspection: Inspection is a verification method where physical characteristics are examined in order to determine compliance without the use of special laboratory equipment procedures, test support items, or services. Inspection uses standard methods such as visual inspection, gauges, etc., to verify compliance with requirements. Inspection shall also include the review of design documents, material lists, codes, plans, etc., to verify that requirements have been met.

Instrument: A subsystem consisting of sensors and associated hardware for making measurements or observations in space.

Instrument Set: The collection of instruments which together support a specific EOS mission.

Major Assembly: A physical subdivision of the Spacecraft consisting of multiple components which are not necessarily functionally related. Examples are the core structure assembly and the propulsion module.

Margin: The amount by which hardware performance capability exceeds requirements.

Measured: A modifier applying to phenomena which have been observed and for which quantitative, calibrated data are available.

Outgassing: The emanation of materials under vacuum conditions resulting in a mass loss and/or material condensation on nearby surfaces.

Part: A hardware element that is not normally subject to further subdivision or disassembly without destruction of designed use.

Planning: Manufacturing and/or inspection documentation designed to assure compliance of hardware or processes with their governing specifications or drawing, and controlled by the hardware supplier's quality assurance organization. Planning directs the flow of flight hardware, the materials accumulated into it, and any operations performed upon it.

Predicted: A reference to characteristics of a system element which have not been verified by test, flight, or other observed data but which are supported by analysis.

Primary Analysis: Analysis intended to be the primary means of verifying a requirement. Normally, primary analysis is supported by test or prototype data.

Protoflight Hardware: Flight quality hardware tested to verify that a component, major assembly, or subsystem meets its performance requirements under environmental conditions which are at design qualification levels but with the same duration as flight acceptance testing. Protoflight hardware is identical to flight hardware in fit, form, and function, which means it can be used for flight or as a flight spare.

Prototype: Hardware of a new design that is subjected to design qualification testing levels and durations, and therefore not used as flight hardware. This is referred to as QTM hardware in this document.

Qualification: The process of demonstrating that a given design and manufacturing approach produces hardware that will meet all performance specifications when subjected to environmental conditions more severe than those expected during intended use.

Qualification Hardware: Qualification hardware is hardware which is not previously space qualified and/or whose design is complex or unproven. This hardware is tested to verify that its performance requirements will be met under environmental conditions which are significantly more severe (higher levels and for longer durations) than in flight.

Qualification Test Model (QTM): QTM hardware undergoes a high level of environmental exposure during test for a relatively long duration (qualification test level and duration) and consequently will not be used for flight because it has been stressed beyond reliable limits. It usually is composed entirely of flight quality hardware, but in most cases contains no flight components. In this document, only the term "QTM" will be used, although "prototype" is synonymous.

Spacecraft: The EOS–AM flight segment including the Spacecraft Bus and the instrument set.

Subsystem: A functional subdivision of the Spacecraft consisting of multiple functionally related components. EOS subsystems include: command and data handling; guidance, navigation and control; communications; structures/mechanisms; electrical power; thermal control; and propulsion.

Support Analysis: Analysis intended to support test results as a means of verifying a requirement. Support analysis includes that analysis required to establish detailed test requirements or interpret test data.

Temperature Cycle: One temperature cycle consists of raising a set of temperatures to a specified "hot" level and maintaining them there for a period of time, then cooling them and maintaining a specified "cold" temperature for a certain length of time, then returning them to ambient levels, all under ambient pressure conditions.

Test: Test is a method of verification wherein performance requirements are verified by measurement during and after the controlled application of functional and environmental stimuli. These measurements may require the use of laboratory equipment, recorded data, procedures, test support items, or services.

Thermal Balance Test: A test conducted to verify the accuracy of the thermal math model which is used to predict the thermal performance of the Spacecraft when operated in the environmental conditions expected for the established mission.

Thermal Cycle: One thermal cycle consists of raising a set of temperatures to a specified "hot" level and maintaining them there for a period of time, then cooling them and maintaining a specified "cold" temperature for a certain length of time, then returning them to ambient levels, all under vacuum conditions.

Thermal Stabilization: The condition that exists when the rate of change of temperatures has decreased to the point where the test item is expected to remain within the specified test tolerance for the necessary test duration.

Thermal–Vacuum Test: A test to demonstrate hardware performance in an environment that simulates on–orbit conditions by controlling temperature and vacuum. The test can also uncover latent defects in design and workmanship.

Vibroacoustics: An environment induced by the high–intensity acoustic noise associated with various segments of the flight profile; it manifests itself throughout the Spacecraft in the form of directly transmitted acoustic excitation and as structure–borne random vibration excitation. In this document, the terms "vibroacoustics" or "acoustic exposure" will be used, although "acoustic noise" is synonymous.

(This page intentionally left blank.)

APPENDIX III

30 SPACECRAFT FLIGHT HARDWARE TEST MATRIX

The test matrix, Table XIII, shown in this Appendix summarizes the test requirements for components, major assemblies, Equipment Modules, and the Spacecraft.

Table XIII. Spacecraft Flight Hardware Test Matrix*

SPACECRAFT				Test Definition																			
Item	Spec	4 Test H/W	5 Test Phase	Functional	Perform	IVT	2 EMC	Modal Surv.	Strength Test	Sine Vibration	Rand. Vib.	Acoustic	Pyro Shock	Alignment	1 Mass Prop.	Leakage	Temp Cycle	Ther. Vac.	Ther. Bal.	3 Demo	Life	ETE/Compatibility	Comments/Other (Describe)
Spacecraft	20005396	P	Q	X	X	X	X					X	X	X	X	X		X	X	X		X	Also Mag Dipole Test
Spacecraft Bus	20001388	P	Q	X		X								X		X[19]				X			Also Mag Dipole Test

* See separate notes at end of table.

Table XIII. Spacecraft Flight Hardware Test Matrix* (Continued)

EM AND SUBSYSTEM ASSEMBLIES				Test Definition																			
Item	Spec	4 Test H/W	5 Test Phase	Functional	Perform	IVT	2 EMC	Modal Surv.	Strength Test	Sine Vibration	Rand. Vib.	Acoustic	Pyro Shock	Alignment	1 Mass Prop.	Leakage	Temp Cycle	Ther. Vac.	Ther. Bal.	3 Demo	Life	ETE/Compatibility	Comments/Other (Describe)
S/C Core Assy	20008701	P	Q					X	X[14, 16]					X	X								Mass models used[16]
Pwr EM[6]	20001408	P	A	X	X	X				X		X			X		X						Also, heat pipe eval.
Recorder EM[6]	20001411	P	A	X	X	X				X		X			X		X						Also, heat pipe eval.
Com/C&DH EM[6]	20001419	P	A	X	X	X				X		X			X		X						
GNC Sensor EM[6]	20001407	P	A	X	X	X				X		X		X	X			X	X				
GNC Opt. Bench	20008900	P	Q							X				X			X						Stability check with mass models
RWA EM[6]	20001409	P	A	X	X	X				X		X			X		X						Also, heat pipe eval.
S/A Install.	20008601	P	A	X		X														X			
HGA Install.	20008572	P	A		X	X														X			
PM Install.	20008703	P	P	X		X								X									
DAS Panel[6]	20008571	P	A	X	X	X				X		X			X		X						Also, heat pipe eval.
Battery Panel Assembly, Hex Bay	20008746	Q	Q	X	X		X	X	17	X		X	X		X			X	X				Workhorse Battery
		A	A	X	X		X		17	X		X			X		X						EMC test with BPC Flight Battery
Battery Panel Assembly, Power Equipment Module	20008882	Q	Q	X	X		X	X	17	X		X	X		X		X						Workhorse Battery
				X	X		X		17	X		X			X		X						EMC test with BPC Flight Battery

* See separate notes at end of table.

Table XIII. Spacecraft Flight Hardware Test Matrix* (Continued)

INSTRUMENT INSTALLATIONS				Test Definition																			
Item	Spec	4 Test H/W	5 Test Phase	Functional	Perform	IVT	EMC 2	Modal Surv.	Strength Test	Sine Vibration	Rand. Vib.	Acoustic	Pyro Shock	Alignment	Mass Prop. 1	Leakage	Temp Cycle	Ther. Vac.	Ther. Bal.	Demo 3	Life	ETE/Compatibility	Comments/Other (Describe)
ASTER Install.	20008818	P	A	X	7	X								X									Instrument grounding check
CERES Install.	20008828	P	A	X		X								X									Instrument grounding check
MISR Install.	20008838	P	A	X		X								X									Instrument grounding check
MOPITT Install.	20008858	P	A	X	7	X								X									Instrument grounding check
MODIS Install.	20008848	P	A	X		X								X									Instrument grounding check

* See separate notes at end of table.

Table XIII. Spacecraft Flight Hardware Test Matrix* (Continued)

STRUCTURE AND MECHANISMS				Test Definition																			
Item	Spec	4 Test H/W	5 Test Phase	Functional	Perform	IVT	2 EMC	Modal Surv.	Strength Test	Sine Vibration	Rand. Vib.	Acoustic	Pyro Shock	Alignment	1 Mass Prop.	Leakage	Temp Cycle	Ther. Vac.	Ther. Bal.	3 Demo	Life	ETE/Compatibility	Comments/Other (Describe)
SMS S/S	20001415																						
Primary Core Structure	23000100	P	Q																				Modal and static load tests at S/C Core Assy. level using mass models
PM Structure	20008793	P	Q					X	X[11]	X[11]													
Inst. Mount (truss)	TBD	P	Q						X														Static load test at S/C core assy. level
EM Mount (except kinematic)	TBD	P	Q						X														Static load test at S/C core assy. level
Recorder EM Structure	20008884	P	Q					X	X														with mass models
Power EM Structure	20001408	E	Q					X	X														Sine Burst Strength Test, with mass models, TCS, and kinematic mounts
		P	Q					X	X														
CDH/COMS EM Structure	20008891	P	Q					X	X														with mass models
RWA EM Structure	20008903	P	Q					X	X														Modal tap test with mass models
Hex Battery Panel Struct.	TBD	P	Q					X	X														Tap modal test
DAS Panel Struct.	TBD	P	Q					X	X														Tap modal test

* See separate notes at end of table.

Table XIII. Spacecraft Flight Hardware Test Matrix* (Continued)

STRUCTURES AND MECHANISMS (Cont'd)				Test Definition																			
Item	Spec	4 Test H/W	5 Test Phase	Functional	Perform	IVT	2 EMC	Modal Surv.	Strength Test	Sine Vibration	Rand. Vib.	Acoustic	Pyro Shock	Alignment	1 Mass Prop.	Leakage	Temp Cycle	Ther. Vac.	Ther. Bal.	3 Demo	Life	ETE/Compatibility	Comments/Other (Describe)
Kinematic Mnts[8]	20001400	Q	Q					X	X					X						X			Standalone qual tests
		P	Q						X					X						X			Protoflight Test with EMs
S/A Drive	20008606	Q	Q	X	X		X		[17]		X		[18]					X			X		
		A	A	X	X		X		[17]		X							X					
HGA Release Assy.	20008592	P	Q								X						X			X			Demo using mass model of HGA
HGA Boom	20008587	P	Q						X[14]		X						X						Test with release assy. where appropriate
GNC Sensor EM Struct	TBD	P	Q					X	X					X									with mass models
HGA Hinge	20008585	E	Q	X																X			Harness torque tests spring torque verification
		P	Q	X	X													X		X			Evaluate with harness and damper
Separation System (S/C to LV)	TBD	Q	Q	X	X															X			Test firing of squibs
		A	A	X	X															X			
Instr. Mntng Plate	(Various)	P	Q					X	X														Sine Burst Strength Test

* See separate notes at end of table.

Table XIII. Spacecraft Flight Hardware Test Matrix* (Continued)

THERMAL CONTROL SUBSYSTEM (TCS)				Test Definition																			
Item	Spec	4 Test H/W	5 Test Phase	Functional	Perform	IVT	2 EMC	Modal Surv.	Strength Test	Sine Vibration	Rand. Vib.	Acoustic	Pyro Shock	Alignment	1 Mass Prop.	Leakage	Temp Cycle	Ther. Vac.	Ther. Bal.	3 Demo	Life	ETE/Compatibility	Comments/Other (Describe)
TCS S/S	20008549	P	P		12	12	12					12	12			12	12	12	12				
Instr. CPHTS		EDM	D		X											X		X	X				CPHTS EDM
		EDM	L		X											X					X		CPHTS Life test
		P	P		X	7										X		12	12				7
CPHTS Components	Various	EDM	D	X					17		X		18				X						EDM, Life components
		P,A	P,A	X					17		X						X						
Power EM		EDM	D		X												X	X	X				Tests Power EM EDM
EM Heat Pipes	Various	B	D		X												X						VCHP Dev. Test (Completed)
		EDM	D		X						X		18				X	X					EDM Components
	Various	P,A	P,A	X							X						X	X					
HCE	Various	Q	Q	X	X		X				X		X18					X					NOTE 21.
		A	A	X	X		X				X						X						Sine Burst Strength Test
MLI		A	A	X		X						12					12	12					
Misc. TCS H/W13		A	A	X		X						12					12	12					

* See separate notes at end of table.

Table XIII. Spacecraft Flight Hardware Test Matrix* (Continued)

ELECTRICAL POWER SUBSYSTEM (EPS)				Test Definition																			
Item	Spec	4 Test H/W	5 Test Phase	Functional	Perform	IVT	2 EMC	Modal Surv.	Strength Test	Sine Vibration	Rand. Vib.	Acoustic	Pyro Shock	Alignment	1 Mass Prop.	Leakage	Temp Cycle	Ther. Vac.	Ther. Bal.	3 Demo	Life	ETE/Compatibility	Comments/Other (Describe)
EPS S/S	20004749	P	Q																				Tested at S/C level
Solar Array	20008514	P	Q	X	X	X	X	X	X	X		X	X					X					EMC at panel level
DEU, Deployment Elect. Unit		P	Q	X	X	X	X	X	X		X	X[12]	18					X					Test with Solar Array where applicable
BPC	20008596	E	D	X	X																		
		P	Q	X	X		X		17		X		18					X					
	20008593	A	A	X	X		X		17		X						X						EMC test with workhorse battery
Battery Cell Life Test, Thermal EDM	(26)	E, L	D	X	X				15									X	X		X		Battery Panel Assemblies listed under EM and Subsystem Assemblies
Battery Cell, Flight Unit	20008593	A	A	X	X				15								X						
PDU	20008599	E	D	X	X				17														
		P	Q	X	X		X		17		X		18					X					
FDB	20034960	A	A	X	X				17		X						X						
EPC	20008597	P	Q	X	X		X		17		X		18					X					
		A	A	X	X		X		17		X						X						
ADE	20008606	E	D	X	X																		
		P	Q	X	X	X	X		17		X		18					X					IVT with SAD
PSU	20008603	P	Q	X	X		X		17		X		18					X					
SSU	20008604	E	D	X	X																		
		P	Q	X	X	X	X		17		X							X					

* See separate notes at end of table.

Table XIII. Spacecraft Flight Hardware Test Matrix* (Continued)

ELECTRICAL ACCOMMODATIONS S/S				Test Definition																			
Item	Spec	4 Test H/W	5 Test Phase	Functional	Perform	IVT	2 EMC	Modal Surv.	Strength Test	Sine Vibration	Rand. Vib.	Acoustic	Pyro Shock	Alignment	1 Mass Prop.	Leakage	Temp Cycle	Ther. Vac.	Ther. Bal.	3 Demo	Life	ETE/Compatibility	Comments/Other (Describe)
EAS S/S	20008636	P	Q			X																	Tested at EM & S/C level
Harnesses		P	Q	9	9	9	10																
PRA	20008543	P	Q	X			X		17		X		18				X						
		A	A	X			X		17		X						X						

* See separate notes at end of table.

Table XIII. Spacecraft Flight Hardware Test Matrix* (Continued)

COMMAND AND DATA HANDLING S/S				Test Definition																			
Item	Spec	4 Test H/W	5 Test Phase	Functional	Perform	IVT	2 EMC	Modal Surv.	Strength Test	Sine Vibration	Rand. Vib.	Acoustic	Pyro Shock	Alignment	1 Mass Prop.	Leakage	Temp Cycle	Ther. Vac.	Ther. Bal.	3 Demo	Life	ETF/Compatibility	Comments/Other (Describe)
CDHS S/S	20008567	P	Q	X	X	X																	Tested using FSTB
SCC	20008570	E	D	X	X	X																	ETM in FSTB
		P	Q	X	X		X		17		X		18					X					
		A	A	X	X		X		17		X						X						
CTIU	20008569	E	D	X	X	X																	ETM in FSTB
		P	Q	X	X		X		17		X		18					X					
		A	A	X	X		X		17		X						X						
BDU (Inst.)	20039943	E	D	X	X																		
		P	Q	X	X		X		17		X		18					X					
		A	A	X	X		X		17		X						X						
BDU (H/K)	20008568	E	D	X	X																		
		P	Q	X	X		X		17		X		18					X					
		A	A	X	X		X		17		X						X						
DMU (22)		EDM	D	X	X																		
(Part of SSR, 20038286)		P	Q	X	X		X		17		X		18					X					
		A	A	X	X		X		17		X						X						
SFE	20008575	E	D	X	X																		
		P	Q	X	X		X		17		X		18					X					
		A	A	X	X		X		17		X						X						
DCU (22)		EDM	D	X	X																		
(Part of SSR, 20038286)		P	Q	X	X		X		17		X		18					X					
		A	A	X	X		X		17		X						X						

* See separate notes at end of table.

Table XIII. Spacecraft Flight Hardware Test Matrix* (Continued)

GUIDANCE, NAVIGATION & CONTROL S/S				Test Definition																			
Item	Spec	4 Test H/W	5 Test Phase	Functional	Perform	IVT	2 EMC	Modal Surv.	Strength Test	Sine Vibration	Rand. Vib.	Acoustic	Pyro Shock	Alignment	1 Mass Prop.	Leakage	Temp Cycle	Ther. Vac.	Ther. Bal.	3 Demo	Life	ETE/Compatibility	Comments/Other (Describe)
GNC S/S	20004937	P	Q																				Tested at S/C level
RWA	20003824	P	Q	X	X		X		17		X							X					
		A	A	X	X		X		17		X							X					
SSST	20003830	P	Q	X	X		X		17		X		18					X					
		A	A	X	X		X		17		X						X						
TAM	20003825	A	A	X	X		X		17		X		18				X						
CSS	20003828	A	A	X	X		X		17		X		18				X	28 X					
IRU	20003823	A	A	X	X		X		17		X		18					X					
Mag Torquer	20003829	A	A	X	X		X		17		X		18				X						
ACE	20003490	P	Q	X	X		X		17		X		18					X					
ESA	20003827	A	A	X	X		X		17		X		18					X					
FSS	20003828	A	A	X	X		X		17		X		18				X						

* See separate notes at end of table.

Table XIII. Spacecraft Flight Hardware Test Matrix* (Continued)

PROPULSION S/S				Test Definition																			
Item	Spec	4 Test H/W	5 Test Phase	Functional	Perform	IVT	2 EMC	Modal Surv.	Strength Test	Sine Vibration	Rand. Vib.	Acoustic	Pyro Shock	Alignment	1 Mass Prop.	Leakage	Temp Cycle	Ther. Vac.	Ther. Bal.	3 Demo	Life	ETE/Compatibility	Comments/Other (Describe)
PROP S/S	20008617	P	Q	X		X																	Test at module level
Propulsion Module[6]	20008618	P	Q	X	X	X	X					X		X	X	X	X						Functional test includes flow rate, proof pressure
PMEA	20008619	P	Q	X	X		X		17		X		18					X					
Propellant Tank	20001402	A	A						X		X		18			X							Note 23
1 lbf Thrusters	20038078	A	A		X				17		X					X							Proof pressure
Pressure XDC	2308188	A	A		X				17		X					X							Proof pressure
Latch Valves	2629344	A	A		X				17		X					X							Proof pressure
Fill/Drain Valves	2308187	A	A		X				17							X							Proof pressure
Filters	2633638	A	A		X				17							X							Proof pressure
5 lbf Thrusters	3268395	A	A		X				17		X					X							Proof pressure

* See separate notes at end of table.

Table XIII. Spacecraft Flight Hardware Test Matrix* (Continued)

COMMUNICATIONS SUBSYSTEM				Test Definition																			
Item	Spec	4 Test H/W	5 Test Phase	Functional	Perform	IVT	2 EMC	Modal Surv.	Strength Test	Sine Vibration	Rand. Vib.	Acoustic	Pyro Shock	Alignment	1 Mass Prop.	Leakage	Temp Cycle	Ther. Vac.	Ther. Bal.	3 Demo	Life	ETE/Compatibility	Comments/Other (Describe)
COMS S/S	20008580	P	Q																				Test at module level
DAS Antenna	20008506	P	Q	X	X		X		17		X							X					
Omni Antenna	20008583	E	D	X	X																		
		P	Q	X	X				17		X							X					
		A	A	X	X				17		X							X					
S-band Xponder	20008584	E	D	X	X																		
		P	Q	X	X		X		17		X		18					X					EMC test with BRF
		A	A	X	X		X		17		X							X					
KSA Modulator	20008588	E	D	X	X																		
		P	Q	X	X		X		17		X		18					X					
		A	A	X	X		X		17		X							X					
BRF	20008584	E	D	X	X																		
		P	Q	X	X		X		17		X		18					X					EMC test with S-band Transponder
		A	A	X	X		X		17		X							X					
HGA Assembly	20008513	P	Q	X	X	X	X	X	X	X		X	X	X	X			X[25]	X				
HGA Upconverter		P	Q	X	X		X		17		X		18					X					
		A	A	X	X		X		17		X							X					
HGA Transmitter (TWTA)		P	Q	X	X		X		17		X		18					X					
		A	A	X	X		X		17		X							X					

* See separate notes at end of table.

Table XIII. Spacecraft Flight Hardware Test Matrix* (Continued)

COMMUNICATIONS SUBSYSTEM (Cont'd)				Test Definition																			
Item	Spec	4 Test H/W	5 Test Phase	Functional	Perform	IVT	2 EMC	Modal Surv.	Strength Test	Sine Vibration	Rand. Vib.	Acoustic	Pyro Shock	Alignment	1 Mass Prop.	Leakage	Temp Cycle	Ther. Vac.	Ther. Bal.	3 Demo	Life	ETE/Compatibility	Comments/Other (Describe)
HGA Gimbal Assembly		EDM	L	X	X																X		Life Test
		P	A	X	X		X		17		X		18					X					
HGA Antenna Controller		P	Q	X	X		X		17		X		18					X					
		A	A	X	X		X		17		X							X					
Reflector		P	Q	X	X	X			17					X	X		29 X						
SBIU	20008586	P	Q	X	X		X				X		18					X					
Master Oscillator	20008591	E	D	X	X																		
		P	Q	X	X		X		17		X		18					X					
		A	A	X	X		X		17		X							X					
RF Cables	20008666	P	Q	X	X													X					
DAS Transmitter, (SSPA)	20008590	E	D	X	X																		
		P	Q	X	X		X		17		X		18					X					
		A	A	X	X		X		17		X							X					
DAS UP/FS, (Upconverter)	20008573	E	D	X	X																		
		P	Q	X	X		X		17		X		18					X					
		A	A	X	X		X		17		X							X					
DAS Modulator	20008589	E	D	X	X																		
		P	Q	X	X		X		17		X		18					X					
		A	A	X	X		X		17		X							X					
Waveguide Switch	TBD	A	A	X	X				17		X							X					

* See separate notes at end of table.

Notes for Table XIII, Spacecraft Flight Hardware Test Matrix

1. All assemblies classified as components or major assemblies must be weighed.
2. Protoflight components receive full EMC testing. Subsequent (Acceptance) units receive only emissions (signature) testing.
3. Demo implies that demonstrations are to be performed. For example: Boom deployment, and Solar Array release (Pop and catch). See Par. 7.5 of this document.
4. Test Hardware:

   A– Acceptance Model
   B– Breadboard
   E– Engineering Model
   EDM– Engineering Development Model
   ETM– Engineering Test Model
   P– Protoflight
   Q– Qualification Test Model

5. Test Phase:

   A– Acceptance
   D– Development
   L– Life Test
   Q– Qualification

6. Structure modal surveys and strength tests are shown separately, under Structures and Mechanisms section.
7. Ambient test of CPHTS operation and instrument interface at Spacecraft level, after installation of instrument.
8. Protoflight models of kinematic mounts to be tested as part of Power EM EDM Structure Qualification tests.
9. Harness Functional, Performance, and IVT checks include Hipot (Resistance to high potential voltage), circuit resistance, and continuity and isolation checks
10. Harness EMC testing may be performed at a higher level of assembly.

Notes for Table XIII, Spacecraft Flight Hardware Test Matrix (Continued)

11. Propulsion Module Sine Burst Strength Test and sine vibration with mass–simulated tank.

12. Tests performed at Spacecraft level.

13. Miscellaneous TCS hardware includes Temperature Sensors, Pressure Transducers, Thermostats.

14. Static Load Strength Test.

15. Battery cell housings shall receive pressure test.

16. In Spacecraft Core Assembly Static Load Test, mass models shall be used for EMs, S/A, HGA, and instruments.

17. Strength test must be performed at component level for all components unless "no test" factors of safety are implemented in the design. Test verification at component level can be via sine burst, static load, or acceleration testing, per Section 4.4.4.5

18. Component–level pyrotechnic shock test must be performed on qualification or protoflight unit, unless insensitivity to shock environment is established via analysis or history of previous applications.

19. CPHTS Leak Check at Spacecraft level.

20. Acoustic testing with mass models.

21. There will be one QTM for each type of HCE.

22. There will be an EDM and a Protoflight version of the SSR Data Control Unit (DCU) and the SSR Data Memory Unit (DMU). Subsequent units shall receive flight acceptance testing.

23. Propellant tank receives proof pressure test and protoflight acceleration of filled tank, as strength tests, and random vibration of filled tank.

24. Reserved.

Notes for Table XIII, Spacecraft Flight Hardware Test Matrix (Continued)

25. HGA special tests, to be performed before and after T/V, acoustics, etc., include:

    a) Gimbal travel checks, including demonstration of mechanical freedom from jamming or effect on RF performance.

    b) Demonstration of repeatability of alignment and pointing accuracy when removed and remounted, including reflector removal.

26. Thermal EDM Battery Cell Pack contains nine cells, seven of which will receive Battery Life Test.

27. HGA Assembly T/V test with reflector removed.

28. Temperature coefficient test in T/V test temperature extremes defined in the performance specification.

29. HGA reflector shall receive 12 cycles at component level, per Figure 6, no power applied. Vacuum or ambient testing is acceptable.

(This page intentionally left blank.)

APPENDIX IV

40 TYPICAL FLIGHT HARDWARE TEST FLOW

The figures shown in this Appendix were taken from the Verification Plan (PN20005404) and are provided here as a convenience to the user.

The plans are typical, and generic in some cases. Deviations are permitted on a case–by–case basis, as dictated by the test requirements or other aspects of the specific test item.

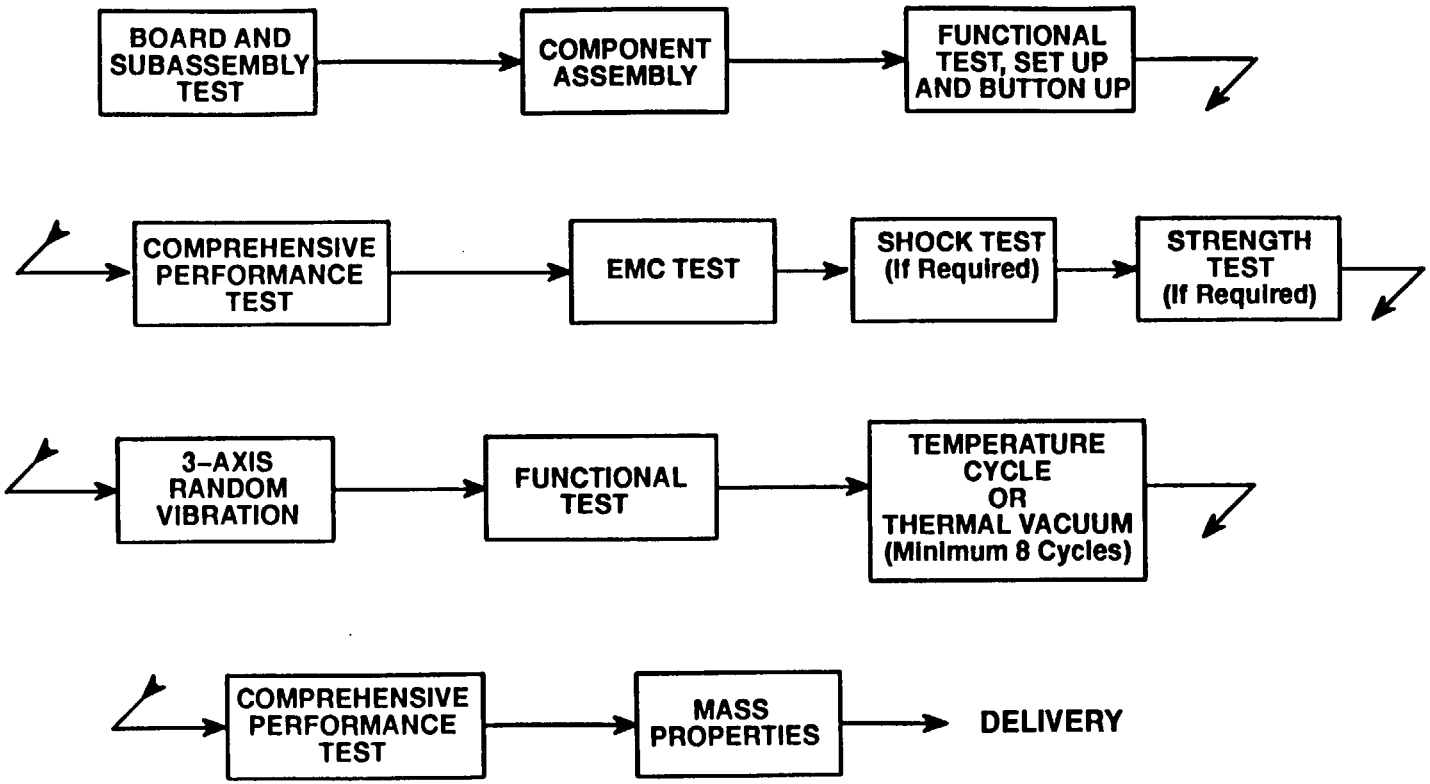

Figure 9. Typical Component Flow

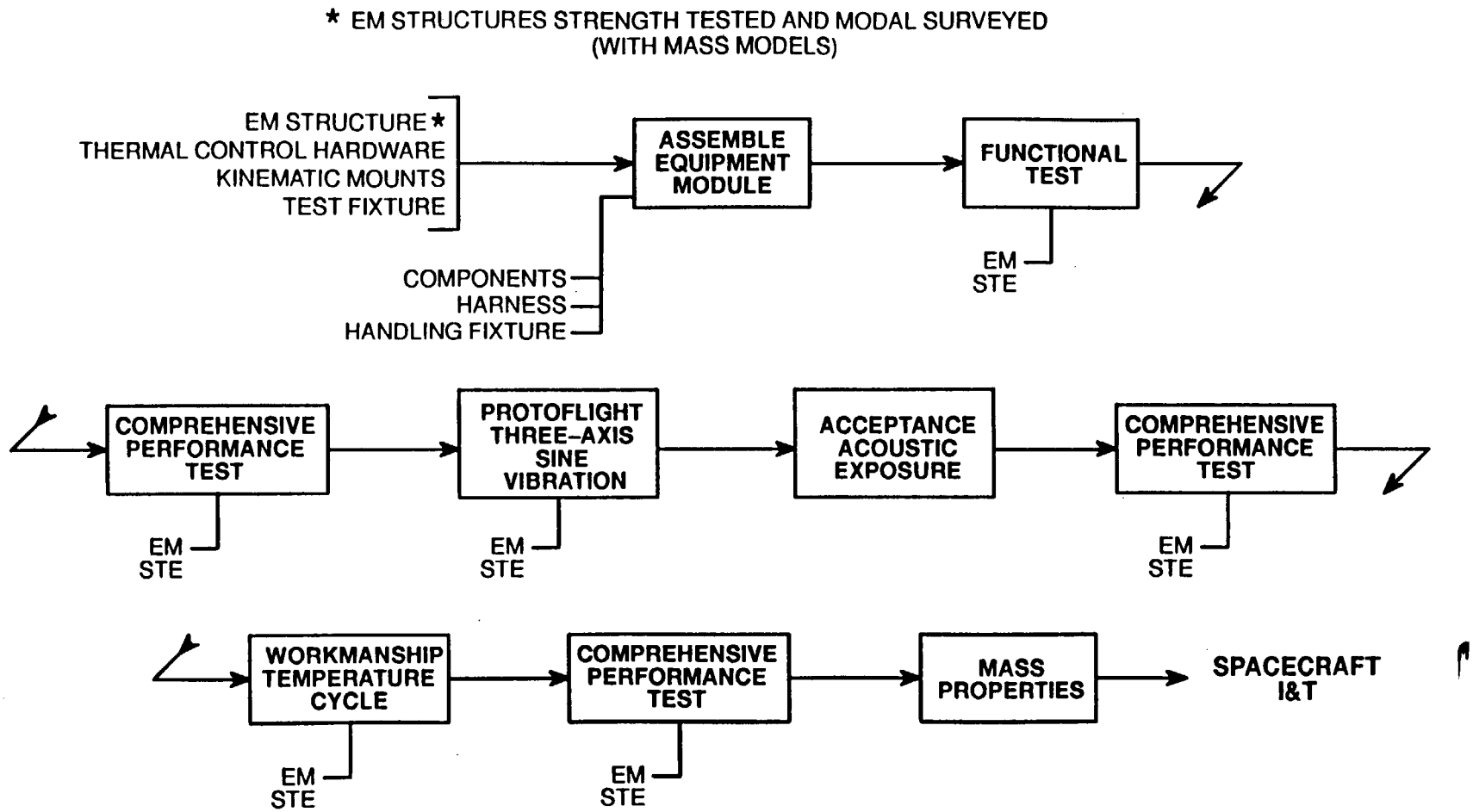

Figure 10. Typical Equipment Module Test Flow

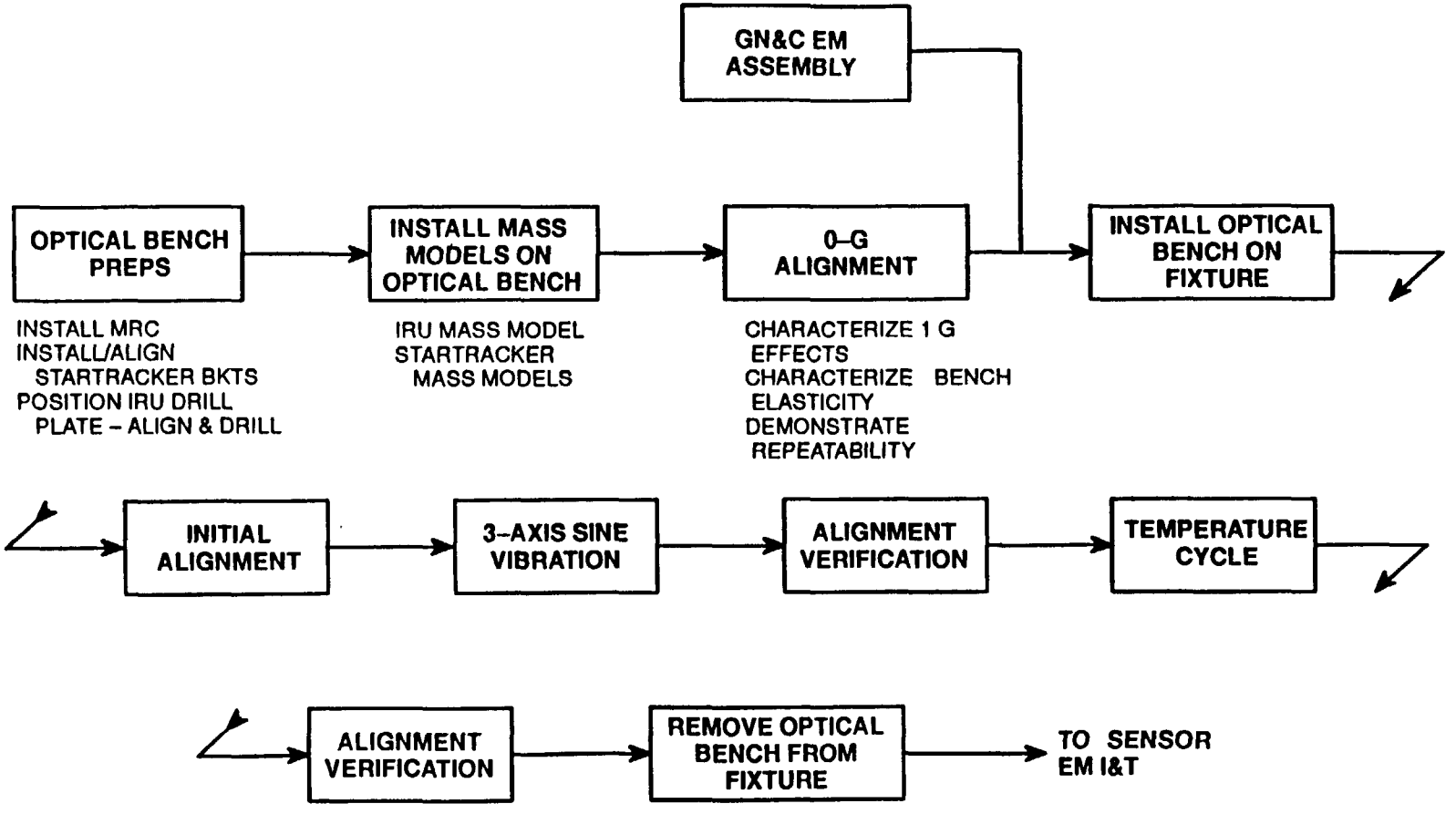

Figure 11. GN&C Sensor Equipment Module Test Flow (Sheet 1 of 2)

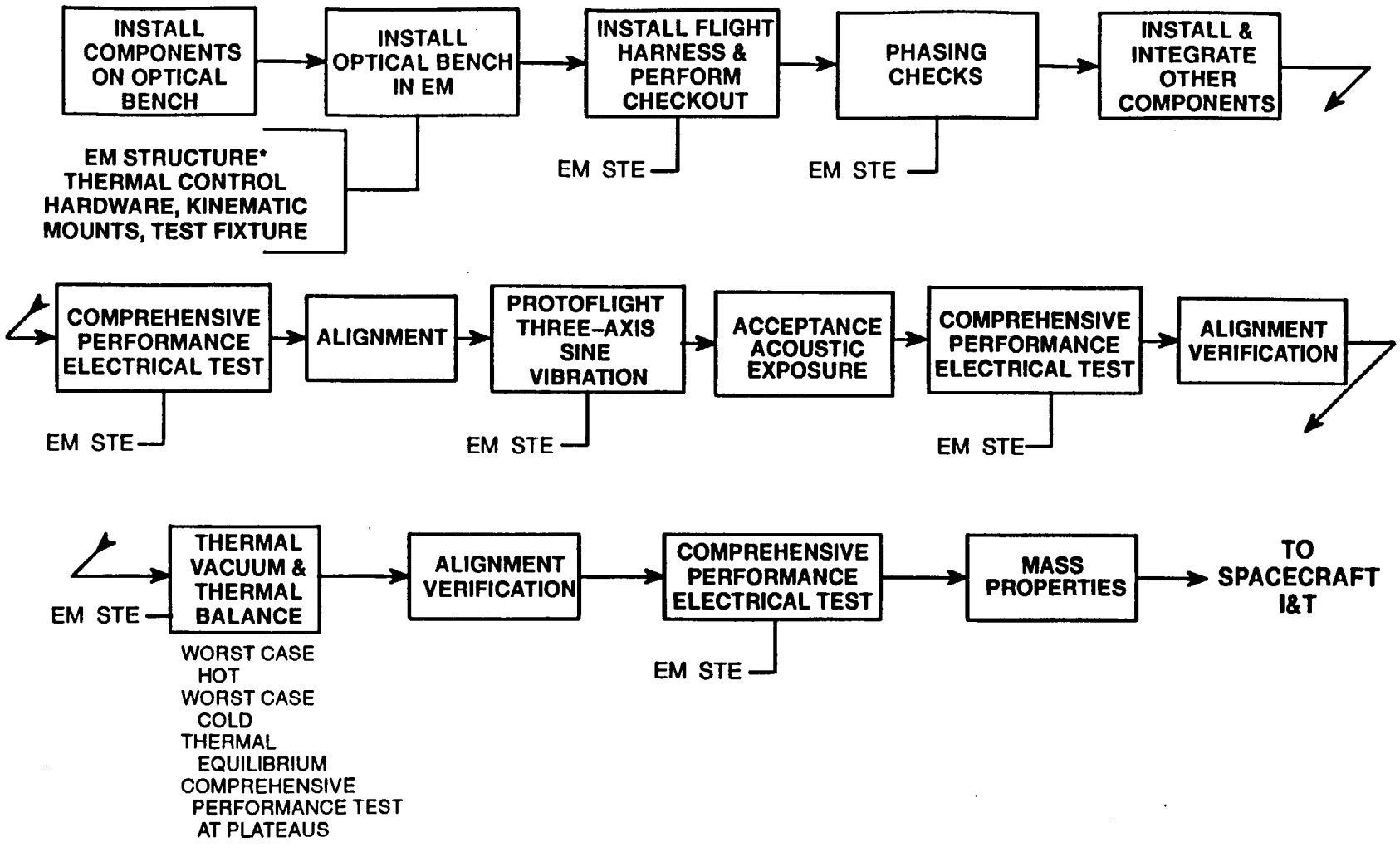

*EM STRUCTURE STRENGTH TEST AND MODAL SURVEY PERFORMED USING MASS MODELS IN LIEU OF FLIGHT COMPONENTS

Figure 11. GN&C Sensor Equipment Module Test Flow (Sheet 2 of 2)

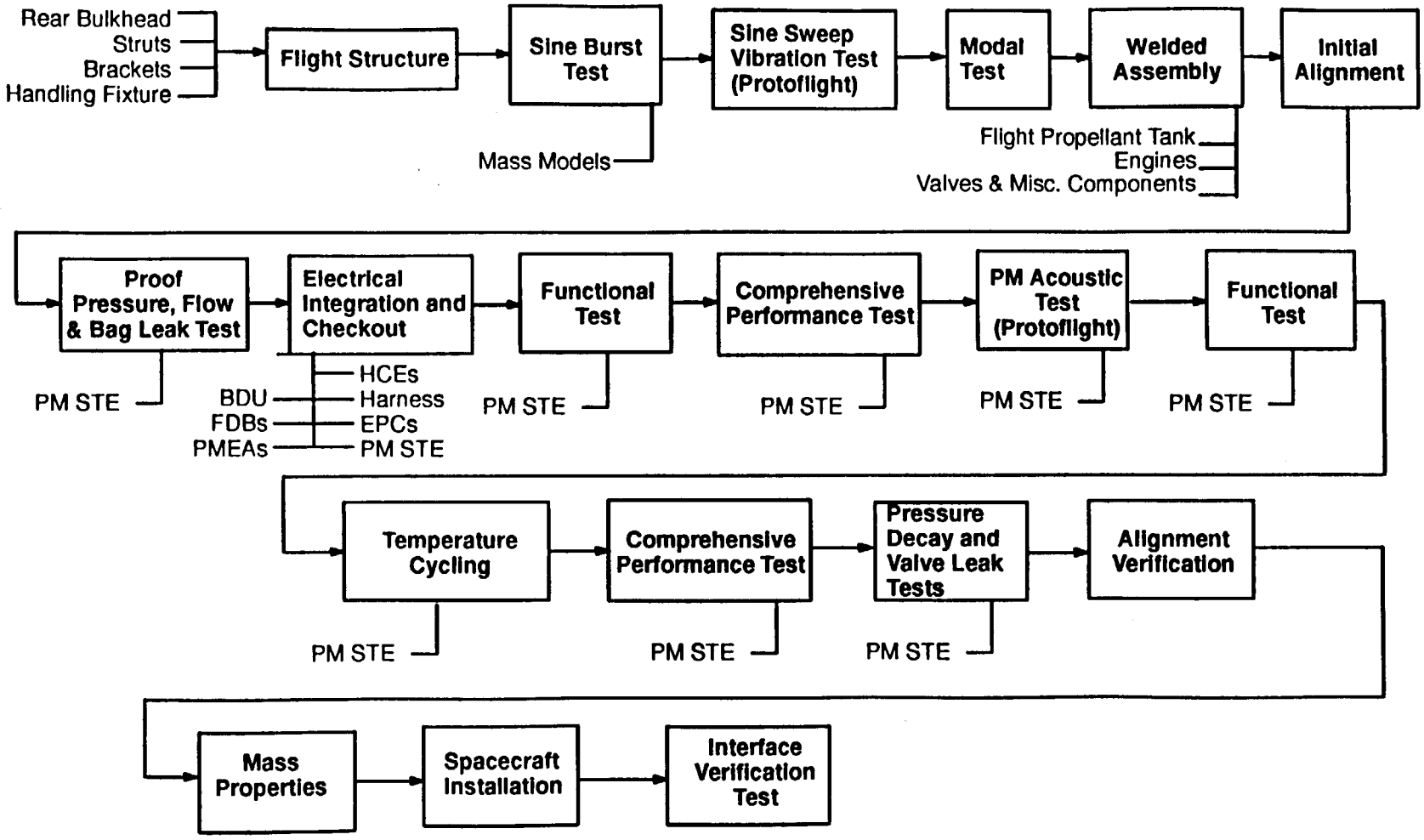

Figure 12. Propulsion Module Integration and Test Flow

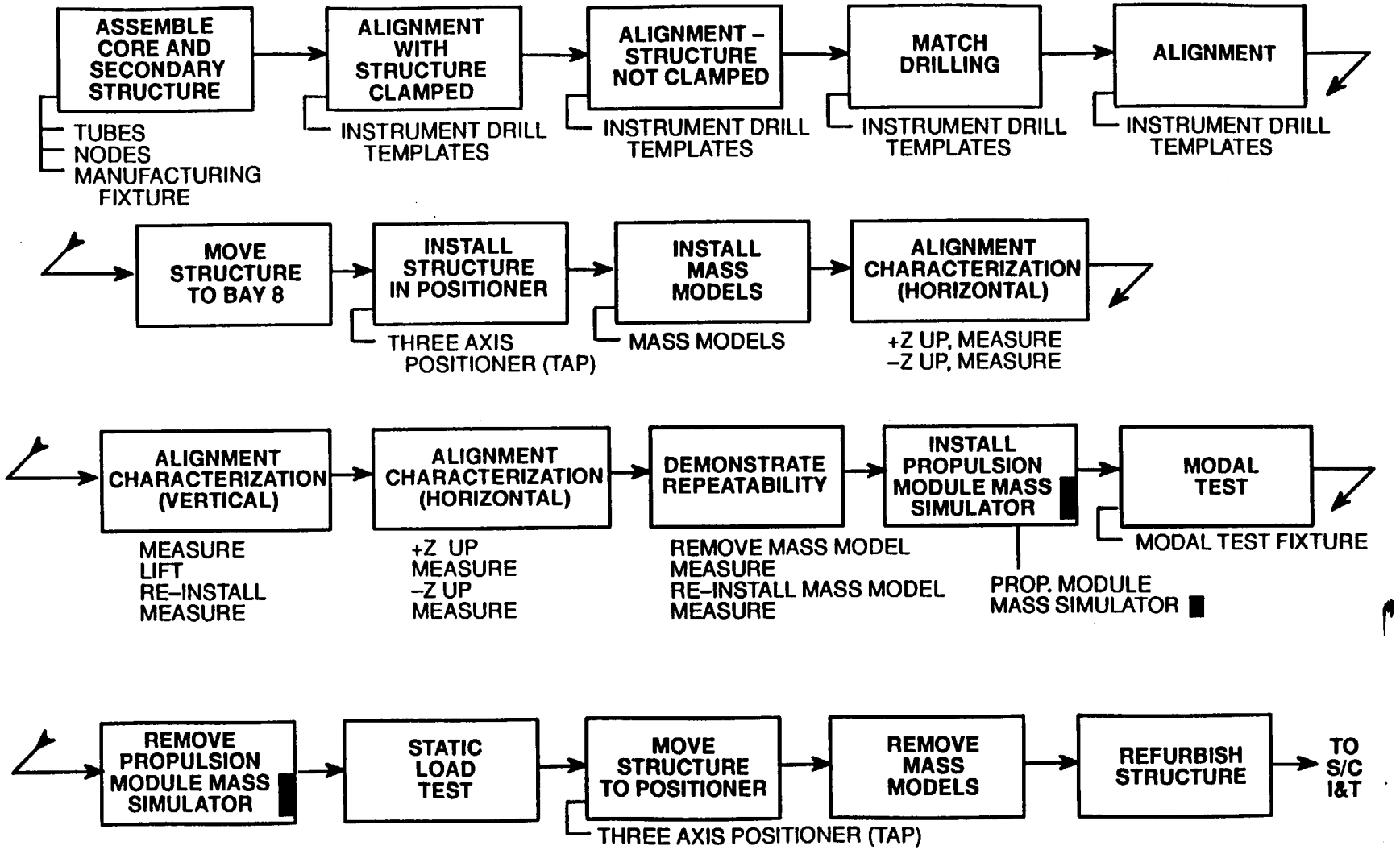

Figure 13. Protoflight Structure Qualification Test Flow

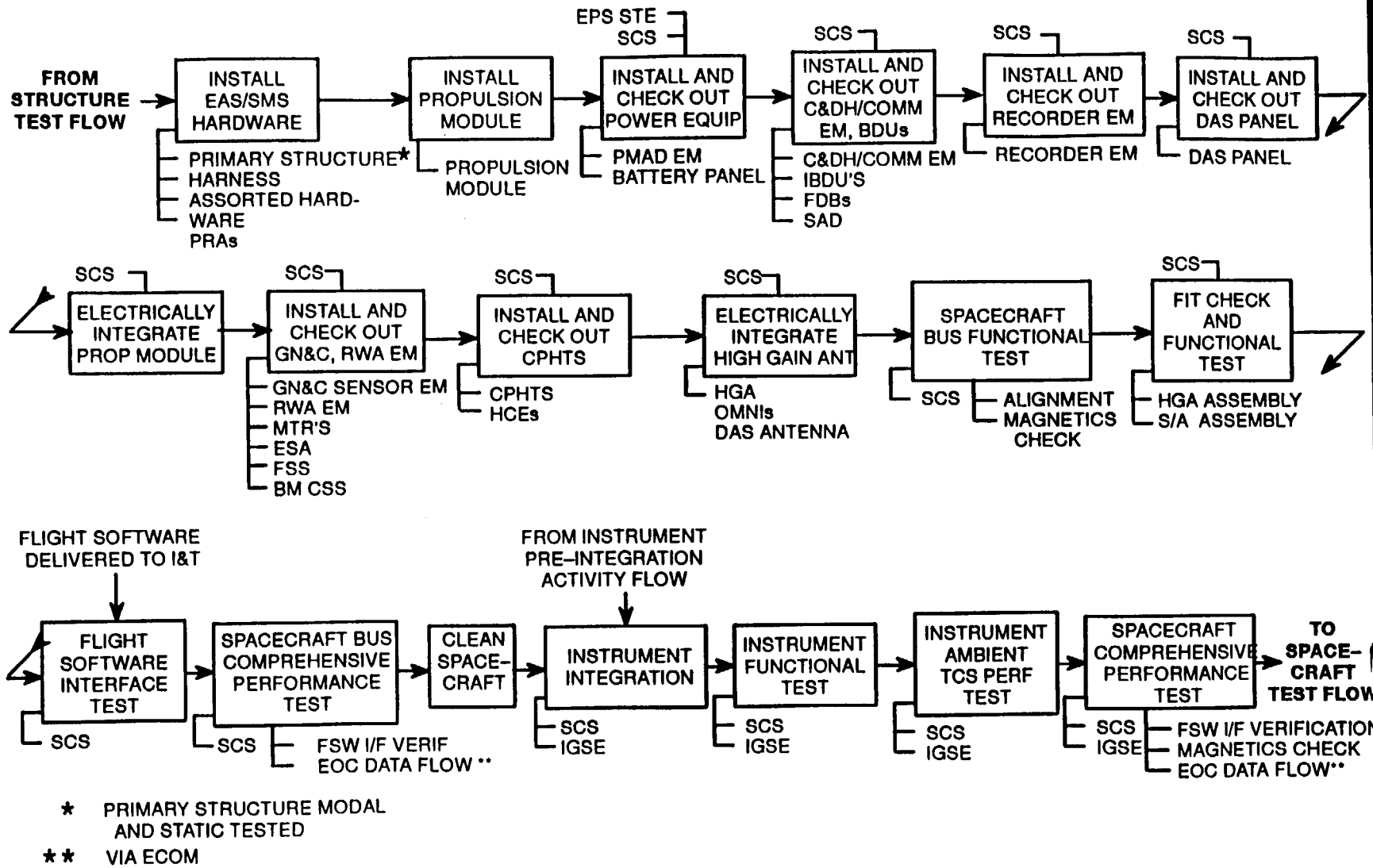

Figure 14. Spacecraft Integration Flow

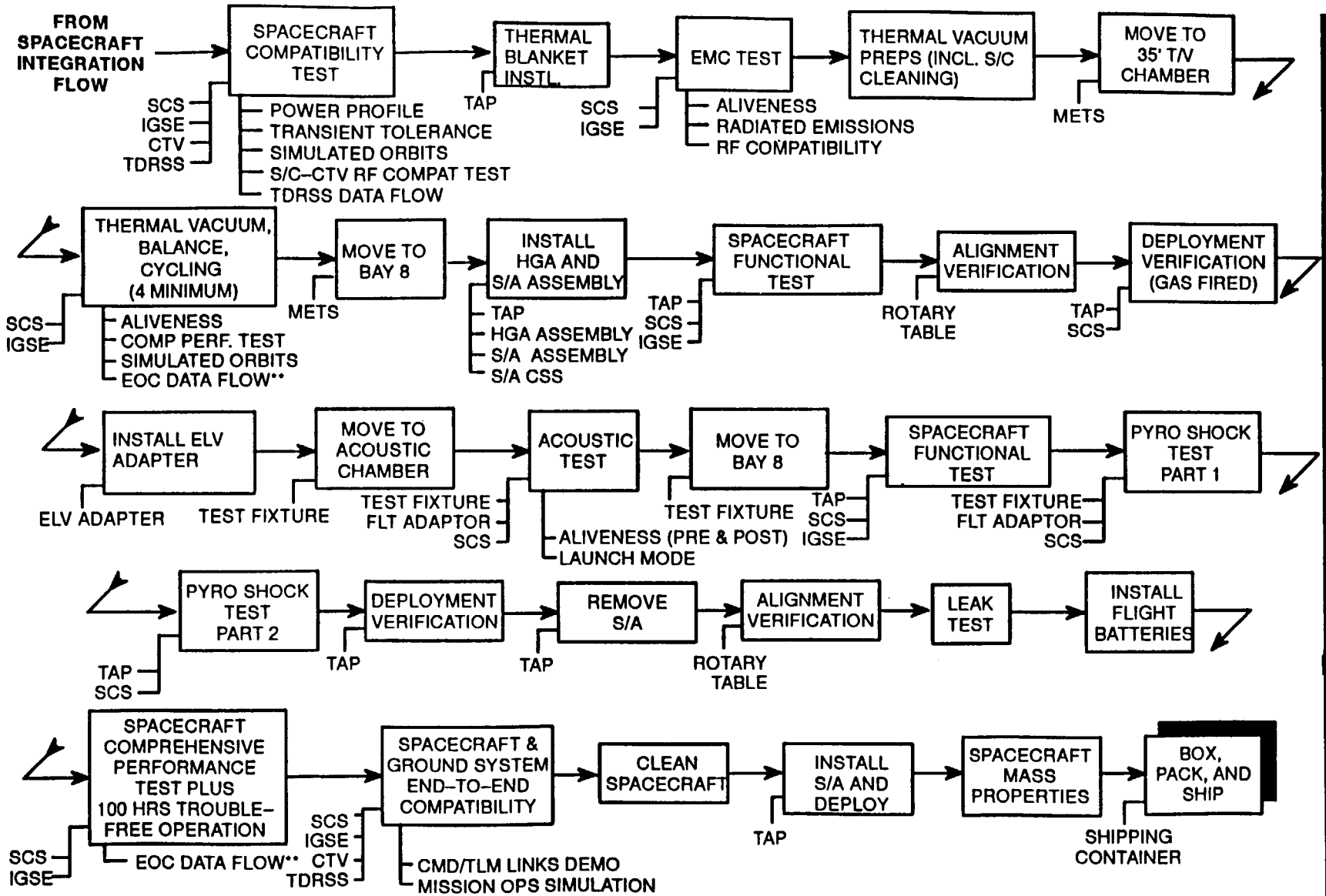

** VIA ECOM

Figure 15. Spacecraft Protoflight Test Flow

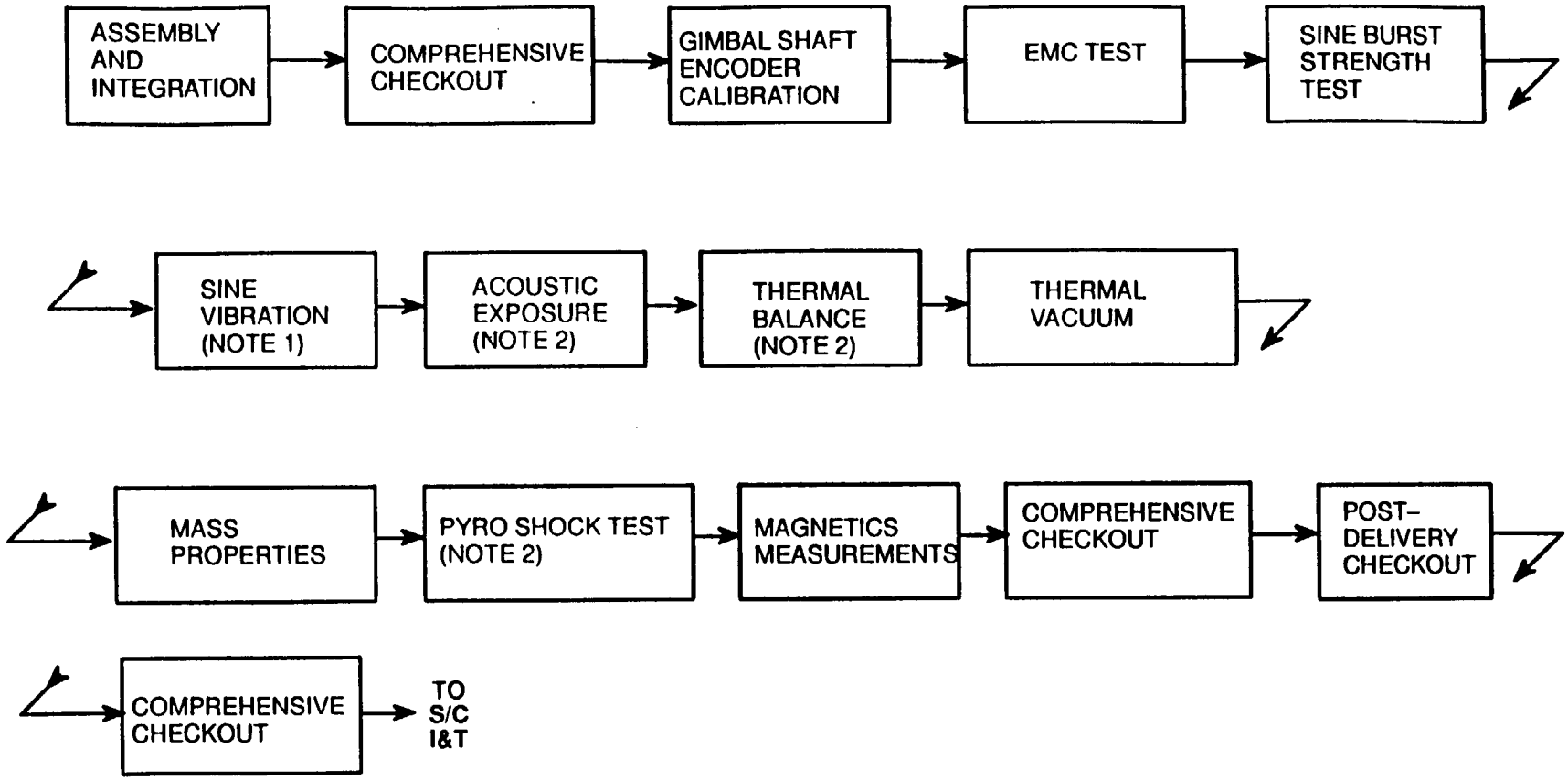

NOTES:

1. ELECTRICAL AND MECHANICAL FUNCTIONAL TESTS SHALL BE PERFORMED BEFORE AND AFTER EACH ENVIRONMENTAL TEST.

2. PROTOFLIGHT ONLY.

3. THE TESTS REQUIRED BY THE INDIVIDUAL COMPONENTS (ANTENNA CONTROLLER, UPCONVERTER, TRANSMITTER, GIMBAL ASSEMBLY, AND REFLECTOR ARE SPECIFIED IN TABLE XIII.

Figure 16. High Gain Antenna Test Flow

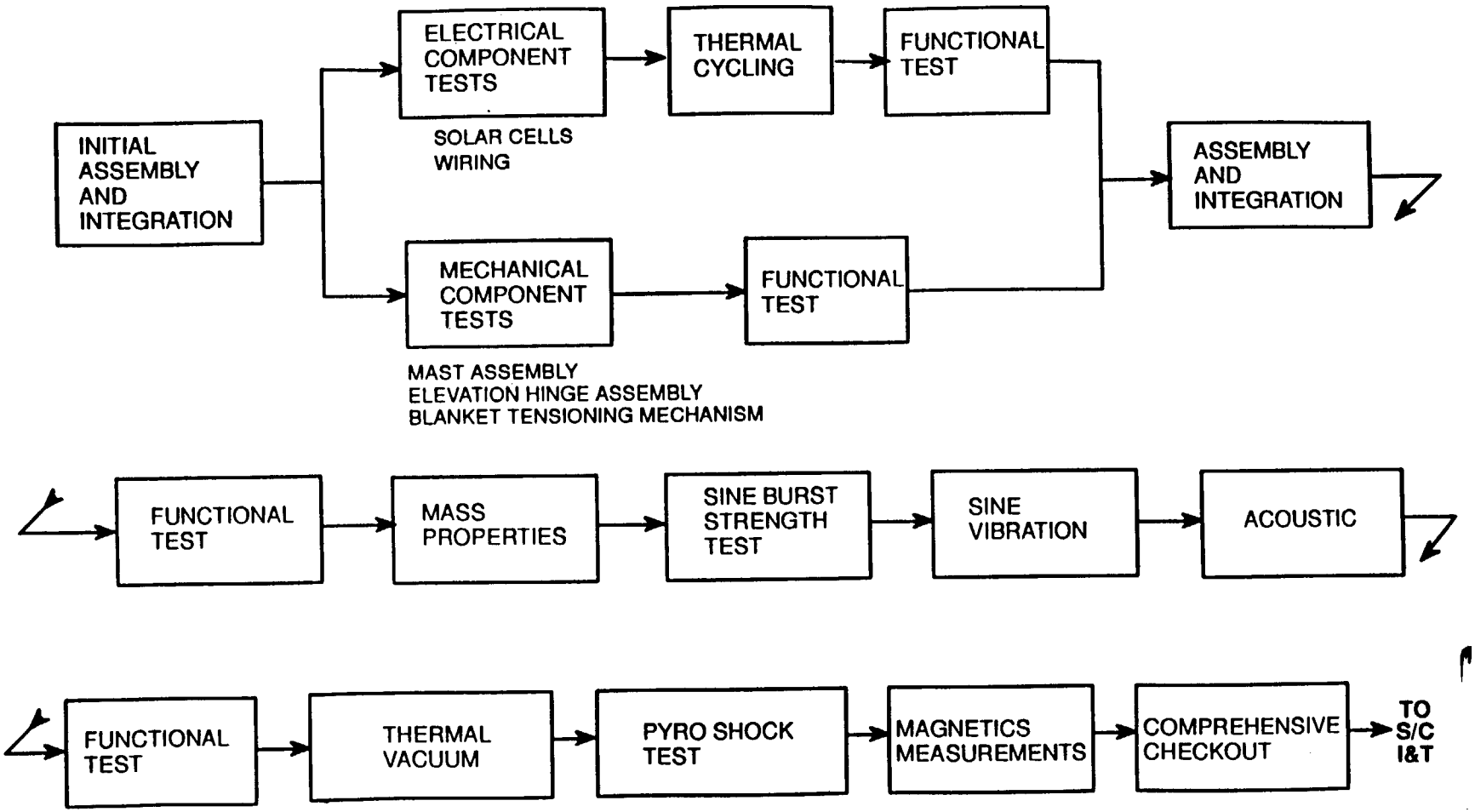

NOTE: Approximate suggested flow. See solar array documentation for details

Figure 17. Solar Array Test Flow

(This page intentionally left blank.)

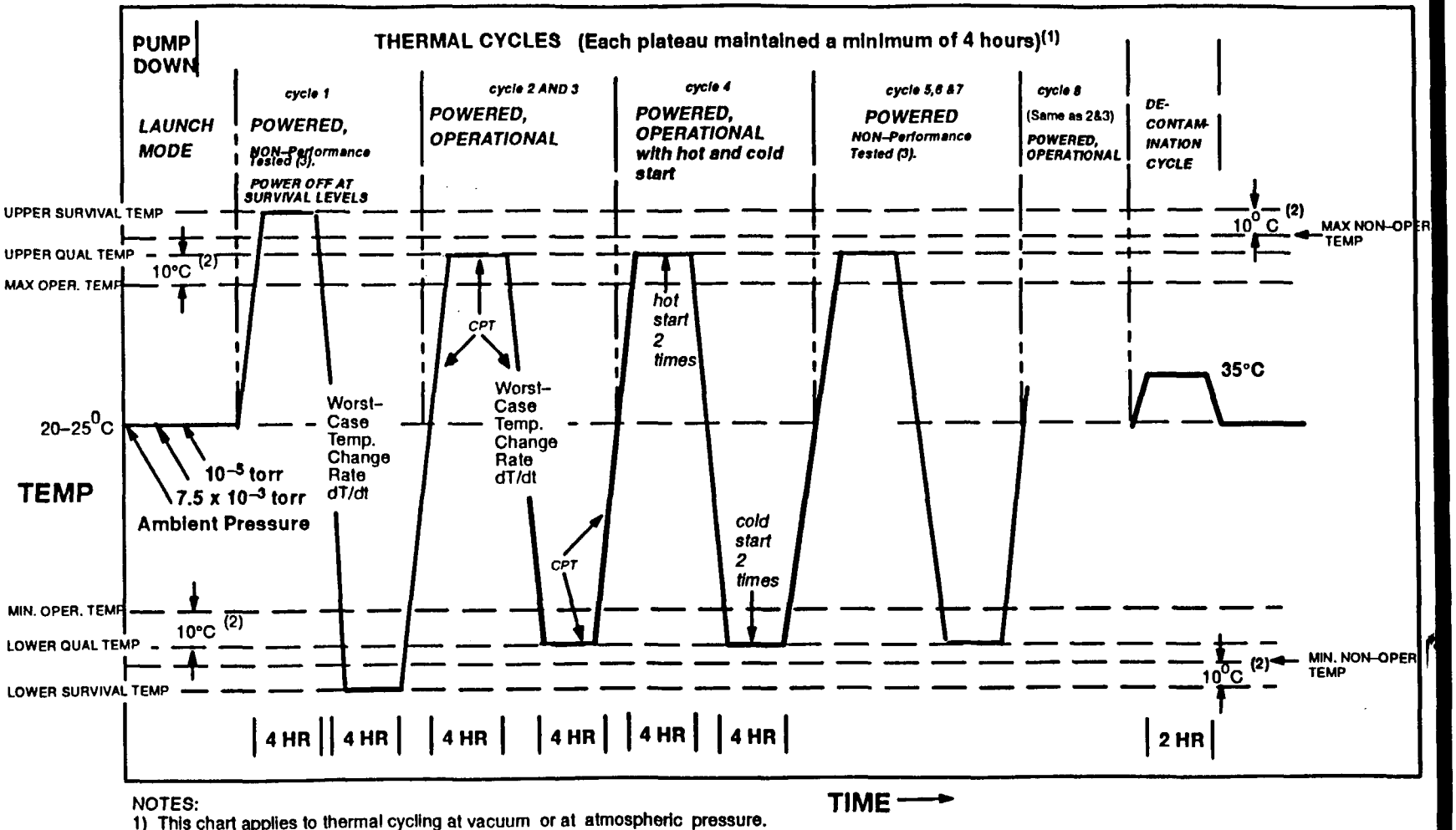

NOTES:
1) This chart applies to thermal cycling at vacuum or at atmospheric pressure.
2) 10°C applies to protoflight testing. For flight acceptance testing, the value shall be 5°C
3) Non-Performance Tested: The component shall be powered on, and its operating parameters monitored continuously, but performance testing and mode changes are not required.

Figure 6. Component Thermal Cycle Test Profile

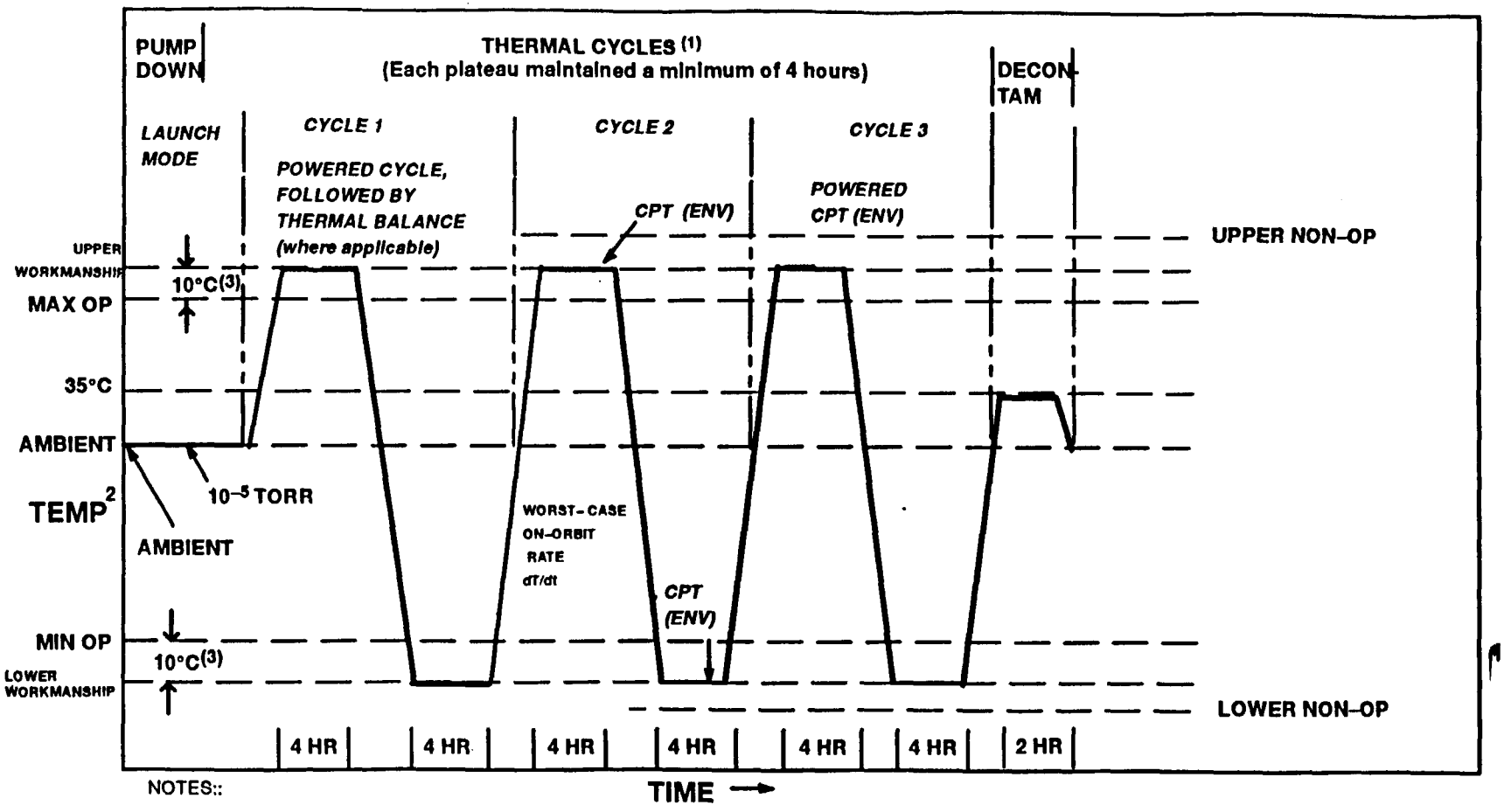

NOTES::

1) THIS CHART APPLIES TO THERMAL CYCLING AT AMBIENT PRESSURE, OR UNDER VACUUM. SEE TEXT FOR EM REQUIREMENTS.
2) FLIGHT BATTERIES SHALL RECEIVE SPECIAL TEMPERATURE PROFILE, DEFINED IN THE BATTERY PERFORMANCE SPECIFICATION.
3) 10°C APPLIES TO PROTOFLIGHT TESTING. FOR FLIGHT ACCEPTANCE TESTING, THE VALUE SHALL BE 5°C.

Figure 7. Equipment Module Temperature Cycle Test Sequence

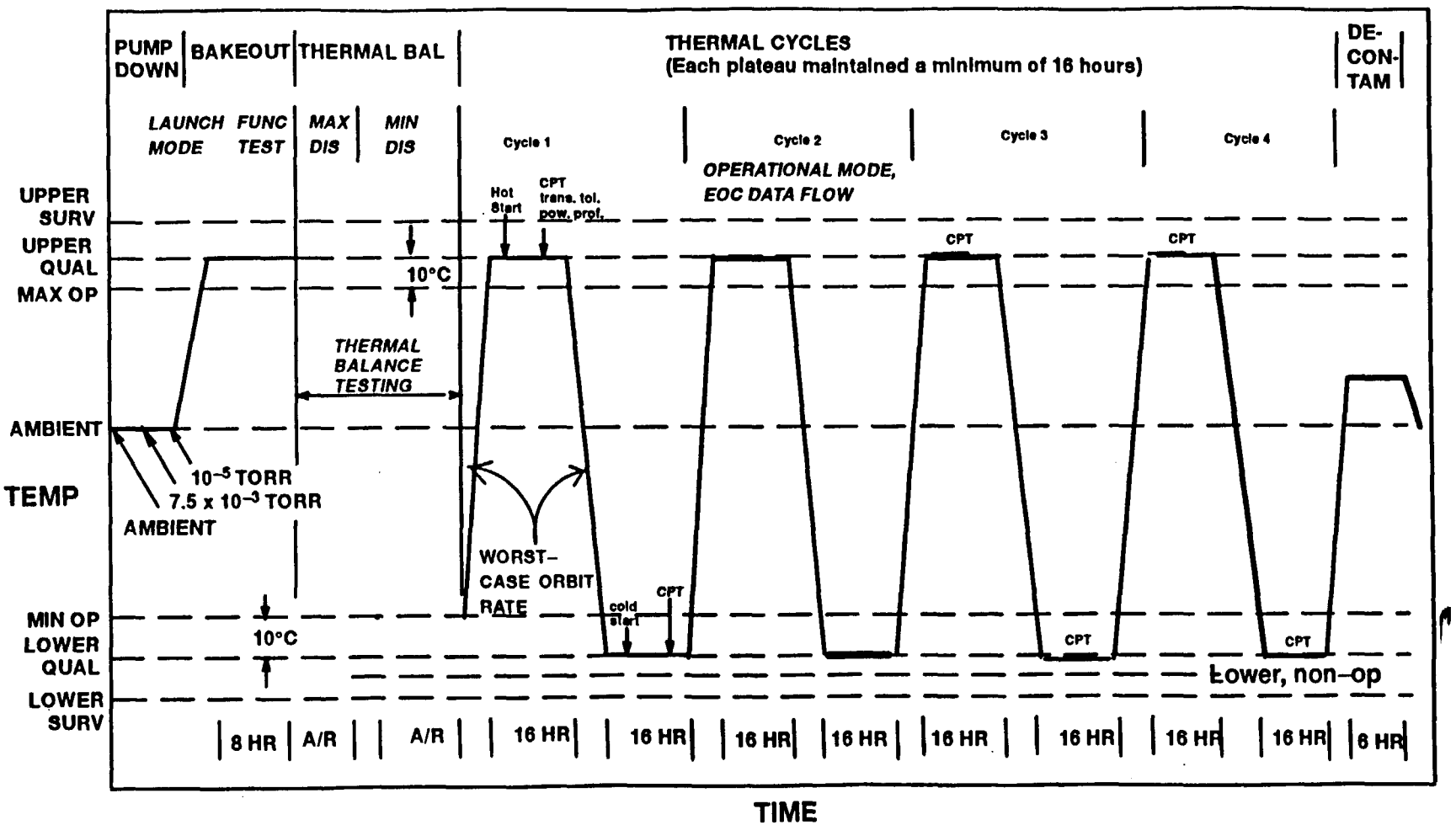

Figure 8. Spacecraft Thermal–Vacuum Test Profile

MARTIN MARIETTA
ASTRO SPACE

EOS-DN-TCS-053 Rev A

DESIGN NOTE

TITLE: EOS-AM Thermal Directory

AUTHOR: C. Scott C Scott 7/28/93

AUTHOR'S MANAGER: D. Chalmers DATE

SE&I MANAGER: S. Carey DATE 7/29/93

CHIEF ENGINEER: D. Longcoy DATE 7/30/93

REVISIONS

LETTER	DESCRIPTION	DATE	AUTHOR
-	Initial Release	9/23/92	C Scott/E Grob
A	Update for Spacecraft PDR	7/27/93	C Scott

MARTIN MARIETTA
ASTRO SPACE

DESIGN NOTE SUMMARY

DN#: EOS-DN-TCS-053 **Revision:** A **Date:** 7/27/93

Title: EOS-AM Thermal Directory

Author: C. Scott **Source ID (ESTA, PD, Memo, etc.):**

Purpose/Questions Answered:

To establish the Spacecraft configuration and operational conditions to be analyzed for Spacecraft PDR.

Summary/Answers:

This document provides detailed Spacecraft configuration information and equipment operational status and dissipations for the mission/phase combinations to be analyzed to support Spacecraft CDR. It is to be used as the basis for all thermal models, both detailed and S/C level.

Recommendations: (Be Specific)	Accepted	Rejected	Baselined	Date

Open Items/Action Required	Responsible Person	Due Date

Comments

Form Completed By C.Scott **Date** 7/27/93 **Page** ___ **of** ___

EOS Form 007-02/01/93

Table of Contents

Section 1 General

1.1) Introduction
1.2) Orbital / Environmental Parameters
1.3) Mission Phase and Spacecraft Operating Modes
1.4) Thermal Analysis Cases
1.5) Materials/Finishes and Thermal Properties
1.6) Thermal Uncertainties and Margins/Contingencies
1.7) Component to S/C or EM Interface Definition
1.8) TCS Component Descriptions
  1.8.1) Heater Control Modelling Techniques
  1.8.2) Heatpipe Descriptions and Modelling Techniques
  1.8.3) Multi-Layer Insulation
1.9) Launch vehicle Interface

Section 2 Housekeeping Design and Analysis

2.1) General Descriptions and Guidelines
2.2) Power EM and Battery Hex Panel
2.3) Recorder EM
2.4) GN&C Sensor EM
2.5) Comm/C&DH EM
2.6) DAS Panel
2.7) RWA EM
2.8) Propulsion Module
2.9) Distributed Housekeeping Equipment
  2.9.1) Primary structure
  2.9.2) Electrical Accomodation Harnessing
  2.9.3) Magnetic Torquer Rods
  2.9.4) Instrument BDUs and HCEs
  2.9.5) Sensors/Antennas
  2.9.6) Solar Array Equipment
  2.9.7) High Gain Antenna Equipment

Section 3 Instruments

3.1) EOS AM Payload Configuration
3.2) Instrument to S/C Thermal Interface (General)

List of Figures

Section 1 General

1.1) Spacecraft Mission Phases
1.2) Spacecraft System Modes
1.3) Spacecraft Science Mode Orientation
1.4) Spacecraft On Orbit Sun Pointing Safe Mode Orientation #1
1.5) Spacecraft On Orbit Sun Pointing Safe Mode Orientation #2
1.6) Spacecraft Launch/Ascent, Sun Pointing Safe Mode Orientation
1.7) Heatpipe Panel and CCHP Cross Section
1.8) MLI Through Conductivity

Section 2 Housekeeping

2.1) EOS-Am Spacecraft Layout
2.2) Power EM Equipment Layout
2.3) Battery Hex Panel Layout
2.4) PMAD CCHP Locations
2.5) Battery 3-Pack Assembly
2.6) Power Battery Honeycomb Panel
2.7) Hex Battery Honeycomb Panel
2.8) Battery 3-Pack Mounting Base Details
2.9) Battery Cell Sleeve Details
2.10) Recorder EM Equipment Layout
2.11) GN&C Sensor EM Equipment Layout
2.12) Star Tracker Mounting Bracket
2.13) Comm/C&DH EM Equipment Layout
2.14) DAS Panel Equipment Layout
2.15) RWA EM Equipment Layout
2.16) RWA Mounting Brackets
2.17)Propulsion Module Layout
2.18) Spacecraft Primary Structur
2.19) IBDUs and HCE Locations
2.20) ESS and FSSH Mounting Bracket
2.21) Solar Arrar and HGA Layouts

Section 3 Instruments

3.1) Spacecraft Nadir Layout
3.2) Instrument to Spacecraft Interface Conductance Schematic

List of Tables

Section 1 General

1.1) Early Mission Mode Timeline
1.2) Spacecraft and Equipment Module Analysis Cases
1.3) Material Thermal Property Summary

Section 2 Housekeeping

2.1) Power EM/Battery HexPanel Mechanical Parameters
2.2) Power EM/Battery Hex Panel Component Temperature Requirements
2.3) Power EM/Battery Hex Panel Power Dissipations
2.4) Transient Battery Power Dissipations
2.) Transient BPC Power Dissipations
2.6) Recorder EM Mechanical Parameters
2.7) Recorder EM Component Temperature Requirements
2.8) Recorder EM Power Dissipations
2.9) Recorder EM Transient Power Dissipations
2.10) GN&C Sensor EM Mechanical Parameters
2.11) GN&C Sensor EM Component Temperature Requirements
2.12) GN&C Sensor EM Power Dissipations
2.13) Comm/C&DH EM Mechanical Parameters
2.14) Comm/C&DH EM Component Temperature Requirements
2.15) Comm/C&DH EM Power Dissipations
2.16) Comm/C&DH EMTransient Power Dissipations
2.17) DAS Panel Mechanical Parameters
2.18) DAS Panel Component Temperature Requirements
2.19) DAS Panel Power Dissipations
2.20) RWA EM Mechanical Parameters
2.21) RWA EM Component Temperature Requirements
2.22) RWA EM Power Dissipations
2.23) RWA EM Transient Power Dissipations
2.24) Propulsion Module Mechanical Parameters
2.25) Propulsion Module Component Temperature Requirements
2.26) Propulsion Module Power Dissipations
2.27) Distributed Equipment Temperature and Size Requirements
2.28) Distributed Equipment Power Dissipations

List of References

1) GE Astro Engineering Process Improvement (EPI) best practices Thermal Systems & Technology Design Standard 6.4, dated 10/14/92

2) "Revised EOS AM Mission Orbit Thermal Environments", EOS-TH-432, A. Trehan, 6/8/93

3) DN-SE&I-001 Rev B, "System Operating Modes", H.Bond dated 5/21/93

4) EOS_SE&I-634,"Nominal EOS-AM Launch/Ascent Timeline", H.Bond, 6/25/93

5) GE Astro Engineering Process Improvement (EPI) best practices Thermal Systems & Technology Design Standard 4.8, dated October 26, 1990

6) PS20005396 'Contract End Item Specification", 4/15/93

7) "Contingency Philosophy for AM-1 Spacecraft", from EOA AM Deputy Program Managers, dated 9/29/92

8)420-03-02, "GIIS" 12/1/92

9) IS20008501,"GIS" 12/30/92

10) PS20008549 "TCS Performance Spec" 7/20/93

11) GE Astro Engineering Process Improvement (EPI) best practices Thermal Systems & Technology Design Standard 4.5, 9/4/91

12) GE Astro Engineering Process Improvement (EPI) best practices Thermal Systems & Technology Design Standard 2.5, 10/1/91

13) IS20008503, Spacecraft to Launch Vehicle Interface Reaquirements", 11/2/92

14) 420-05-02 "Performance Assurance Requirements for the EOS Observatory" , 11/8/91

15) EOS AM Verification Specification PS 20005404, dated 12/92

16) EOS-SE&I-581 "Preliminary Concept to Meet Component Turn-On Temperature Requirements", H Bond, 3/29/93

17) EOS-DN-RES-025, 'Mass & Power Report, Rev P', by G.Gordon, 6/7/93

18) EOS-DN-CNF-017 "Mechanical EM Layout Design Note" , B.Queen, 6/93

19) EOS-DN-EPS-069 " EOS BPC Dissipation Analysis", L Palmieri, 3/22/93

20) EOS-SE&I-614 RevB," EOS-AM Power Consumption Profiles", K. Johnson dated 6/4/93

21) EO-COMM-P AI10 , AI Response from Comm PDR (preliminary), by B. Stephenson, 9/22/92

22) SECN 267, 'Harness Losses in Secondary Voltage Paths', by S. Holaday

23) Teledyne IRU Proposal and Analysis Reports submitted 7/93

24) Ball Solid State Star Tracker Proposal submitted 6/92

25) Honeywell RWA Proposal submitted 6/92

26) Rapifax from R. Beaman describing Battery Temperature Req'ts, 1989 and Power Subsystem PDR Vugraph Presentation, 9/92

27) PS20001407 "Sensor EM Performance Specification" 7/16/93

28) "Temperature Control for the MO" Letter from J Herberg, 4/9/93

29) SCC Monthly Reports from Honeywell, 4/2/93 & 5/4/93 and EOS-SUB-670 "SCC AI 93011" L Trerotola, 3/19/93

30) SECN 479 "DAS Transmitter Change", T.Milbourne, 5/28/93

31) EOS-GN&C-170, 'RWA Peak Dissipation During Slew', by G. Beck, 4/20/92 & "EOS Am RWA Power & Thermal Dissipations Draft", J. Lombardo 4/30/93

32) Meeting (between S. Holaday, E. Grob, D. Chalmers, A. Trehan, C. Scott) on July 30, 1992

33) EOS-DN-EPS-069 " EOS BPC Dissipation Analysis", L Palmieri, 3/22/93

34) Computer File Transmittals from L. Palmieri; 4/93

q35) "EOS-Am Spacecraft Reduced Thermal Instrument Models", G.DaelemansIII, 11/16/92, GSFC Letter

36) "EOS-Am Spacecraft Reduced Thermal Instrument Models", S. Glazer , 11/11/92, GSFC Letter

37) "Resolution of Thermal Model discrepancy Reports", GSFC Letter, R Taylor, 2/1/1993

38) Notes regarding Propulsion Module Power Dissipations to D. Patel

39) EOS-STR-129, "Incorporation of Panel Structure at Primary Structure Bulkhead 7", M Dinardo, 9/21/92

40) EOS-DN-TCS-056 "CPHTS Thermal Analysis", J Fredley, 10/15/93

(This page intentionally left blank.)

Section 1 General

1.1 Introduction

This Thermal Directory documents the baseline to be used for the Spacecraft (S/C) PDR design and analysis efforts by providing the S/C mechanical configurations and mission/component operational scenarios and power dissipations to be used in determining the worst case thermal design cases for the EOS AM S/C. This directory is necessary because no other reference document exists that defines the worst case thermal operating scenarios and component dissipations. This document will, therefore, continue to be maintained after PDR. Data pertaining to the design and analysis of the CPHTS components are documented in the CPHTS analysis report, Reference 40.

1.2 Orbit / Environmental Parameters

The EOS AM mission orbit is a 705km altitude, 98.2 degree inclination polar orbit with a 10:30 +/- 15 minute descending node. The orbital and environmental parameters used in the thermal design and analysis of the EOS AM Spacecraft have been determined in accordance with the Thermal Design Standard documented as Ref 1, where the range of external orbital environmental fluxes is:

	Minimum	Maximum
Solar flux (W/sqin)	0.856	0.915
Albedo factor	0.311	0.336
Earth IR flux (W/sqin)	0.148	0.157

The variation of each of these parameters with season produces combinations of Solar, Albedo, & Earth IR which, when combined with the seasonal variation in beta (sun) angle, may not be readily identifiable as Hot or Cold cases. This is due largely to the misalignment of the sun angle and environmental flux extremes. The bounding combinations of these thermal environmental parameters to be used for analysis of the Spacecraft radiators was determined, documented in Ref 2 and summarized below. These are the values used in the external S/C and detailed EM TRASYS files operations data block:

Hot cases:

Beta angle (Deg)	Solar flux (W/sqin)	Albedo factor	Earth IR (W/sqin)
13.5	0.860	0.329	0.157
18.0	0.910	0.336	0.155
30.8	0.911	0.336	0.155

Cold cases:

Beta angle (Deg)	Solar flux (W/sqin)	Albedo factor	Earth IR (W/sqin)
15.0	0.871	0.315	0.148
22.0	0.871	0.315	0.148
30.0	0.901	0.315	0.148

Along with these environmental extremes, additional variables that include Spacecraft mission phases, operational modes, and equipment dissipations must

be considered to provide a complete thermal analysis of the EOS Spacecraft. The combinations of environmental extremes, mission phase and operational modes that are to be analyzed are described in Section 1.4. Section 2 of this document contains detailed descriptions of the dissipations for the Spacecraft components in the various phase/mode combinations that are to be analyzed.

1.3 Mission Phase and Spacecraft Operating Mode Definition

The Spacecraft mission phase and operational mode definitions are documented in Ref 3. Figures 1.1 and 1.2 compare the different mission phases and the primary/backup Spacecraft operating modes possible for each. Table 1.1 shows the nominal early mission timeline starting with Go-To-Internal power and ending with the first Delta-V burn, as documented in Reference 4.

S/C orientation was also a driver in defining the bounding analysis cases. Figures 1.3 through 1.6 illustrate the earth pointing Science and Survival mode orientations and the 3 sun pointing Safe mode orientations analyzed.

1.4 Thermal Analysis Cases

To properly bound the thermal design, eighteen combinations of orbital and environmental, mission phase and operating mode parameters have been identified as the hot and cold bounding cases for the thermal design of the EOS AM Spacecraft. These cases are discussed below and summarized in Table 1.2.

<u>Launch/Ascent Mode with Survival & Sun-pointing Safe Back-up Modes</u>
These cases begin when the S/C leaves the Launch Vehicle fairing with BOL material properties and continues along the nominal Launch/Ascent timeline, shown in Table 1.1, until one of two failure scenarios occurs. The first assumes there has been a solar array deployment failure and continues past the failure for an additional 10 orbits. The heater power results from this analysis case are used to determine when the batteries will reach their maximum allowable depth of discharge.

The second failure scenario assumes the S/C fails to acquire earth and is forced into a sun-pointing safe mode configuration. There is no roll control of the S/C while in this mode. For this analysis, the S/C is allowed to come to dynamic steady state with the analysis results being the potential worst case temperature and/or heater power predicts.

<u>Science Mode - Maximum</u>
In this case, nominal and/or maximum S/C operation is assumed and all duty cycles have been arranged to provide a thermal worst case hot situation. The S/C orientation is earth-pointing and EOL environments and material properties are used. The power subsystem is analyzed assuming S/C loads are maximized and that there has been a single cell failure. A single TDRSS contact of 20 minutes with an additional 5 minute calibration contact is assumed per Reference 20. This set of cases is used to ensure component temperatures do not exceed their maximum allowable limits and to determine trim MLI requirements for the EM radiators.

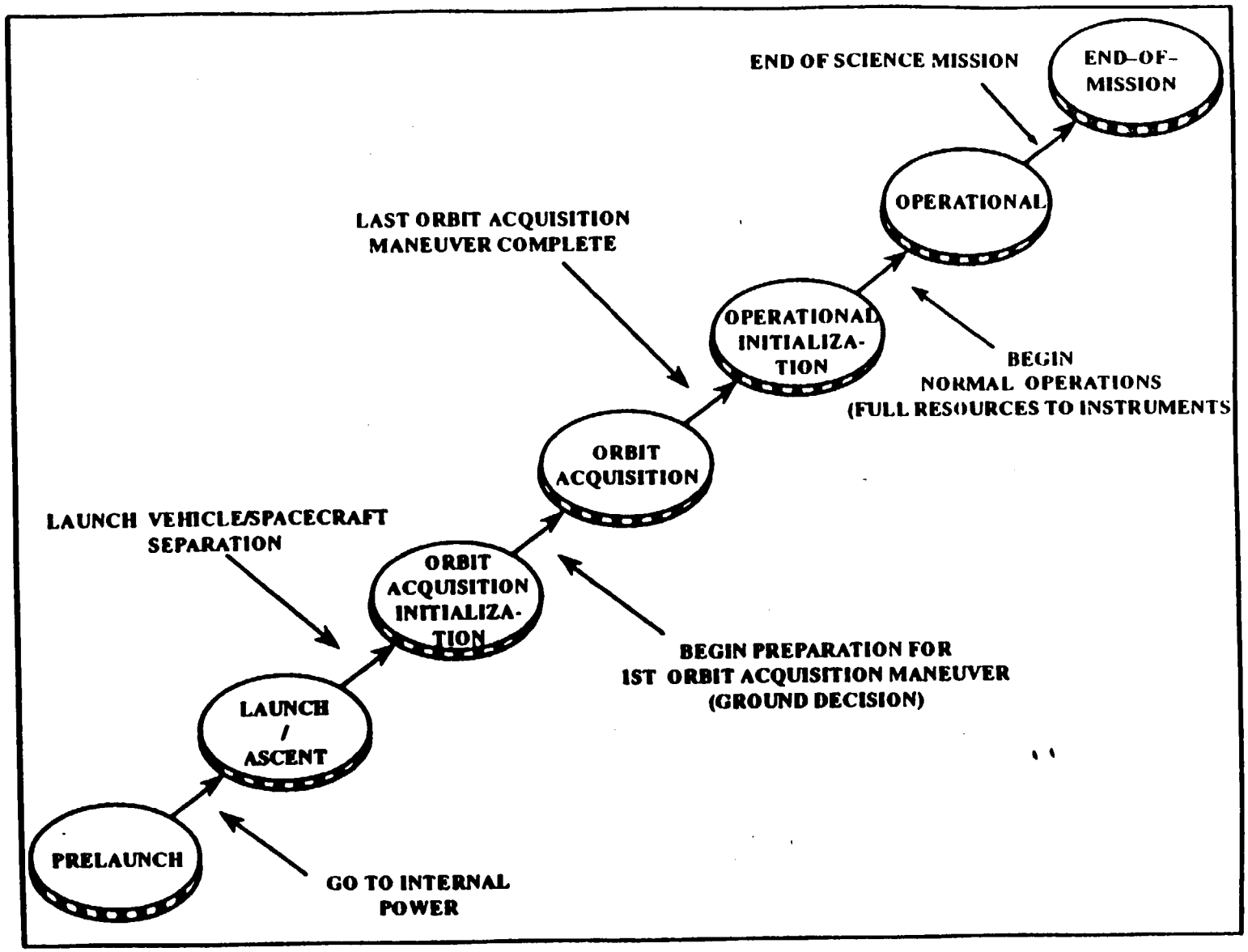

Figure 1.1 : Spacecraft Mission Phases

System Mode	Spacecraft Mission Phase						
	Prelaunch	Launch/ Ascent	Orbit Acquisition Initialization	Orbit Acquisi-tion	Operational Initialization	Operational	End of Mission
Ground Test Mode	P	B					
Launch/Ascent Mode		P	P				
Standby Mode			P	P	P	B	
Science Mode					P	P	
Delta–V Mode				P	P	P	
Survival Mode		B	B	B	B	B	P
Safe Mode		B	B	B	B	B	B

Legend: P Primary mode
B Backup mode

Figure 1.2 : Spacecraft System Modes

Table 1.1 Nominal Early Mission Timeline 500 km Perigee Injection Orbit	
Event	**Estimated Time**
Go to internal power	G
Disconnect T–0 Umbilical	G + TBD
Ignite Stage 0 and liftoff (timeline assumes LV is Atlas IIAS/Centaur)	G + 5 min
Jettison first pair of Solid Rocket Boosters	G + 6.6
Jettison second pair of Solid Rocket Boosters	G + 7.5
Booster Engine Cutoff (BECO)	G + 8
Booster Package Jettison	G + 8 (just after BECO)
Jettison Payload Fairing	G + 9
Atlas Sustainer Engine Cutoff (SECO)	G + 10
Atlas/Centaur Separation	G + 10 (just after SECO)
Centaur First Main Engine Start (MES1)	G + 10
Centaur First Main Engine Cutoff (MECO1)	G + 19
Alignment to Separation Attitude	G + 19.5
Launch Vehicle/Spacecraft Separation	G + 20
First perigee	G + 20
Launch Vehicle/Spacecraft Separation Flag Enabled	G + 20
SCC commands Rate nulling of all Spacecraft axes	G + 20:03
Rate nulling accomplished	G + 21
SCC commands RWA wheel control of S/C attitude	G + 21
Check for Earth in FOV of either ESA	G + 21
SCC commands roll/pitch acquisition	G + 22
SCC commands Solar Array hinge deployment	G + 22.5
Solar Array hinge deployment is completed	G + 24
SCC commands Solar Array blanket deployment	G + 25
Roll and Pitch signals from the ESA are nulled	G + 27
SCC commands yaw axis acquisition	G + 27
Solar Array blanket deployment is completed	G + 37.7
SCC sets flag indicating completion of Earth Acquisition	G + 39
Enter first eclipse (summer solstice launch)	G + 47

Table 1. Nominal Early Mission Timeline (continued) 500 km Perigee Injection Orbit	
Event	**Estimated Time**
Begin Rotating Solar Array at 1ω rate	G + 65
Pass first apogee	G + 69.5
Exit first eclipse	G + 82
Solar Array Begins to Track the Sun	G + 82
Pass second perigee	G + 118
Receive Coarse Orbit Determination From Ground	G + TBD
Batteries are fully recharged	G + TBD
SCC commands activation of HGA release mechanisms	G + TBD
HGA deployment completed	G + TBD (10 minutes after activation)
SCC commands HGA slew to acquire sight to TDRSS	G + TBD
S–band link to TDRSS established through HGA	G + TBD
First Delta–V Burn to Circularize Operational Orbit (assume third apogee is the earliest possible time for this event)	G + 267

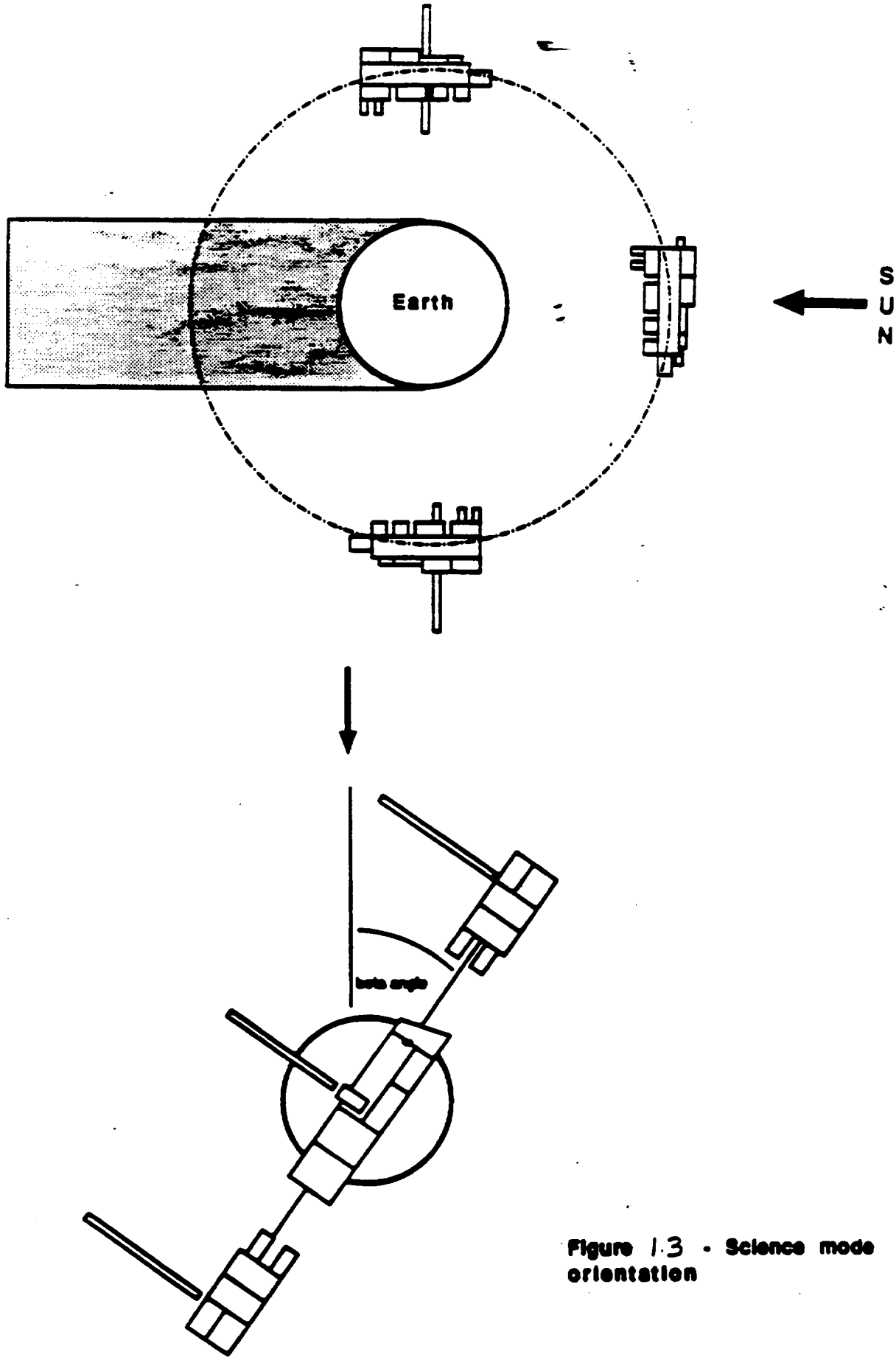

Figure 1.3 - Science mode orientation

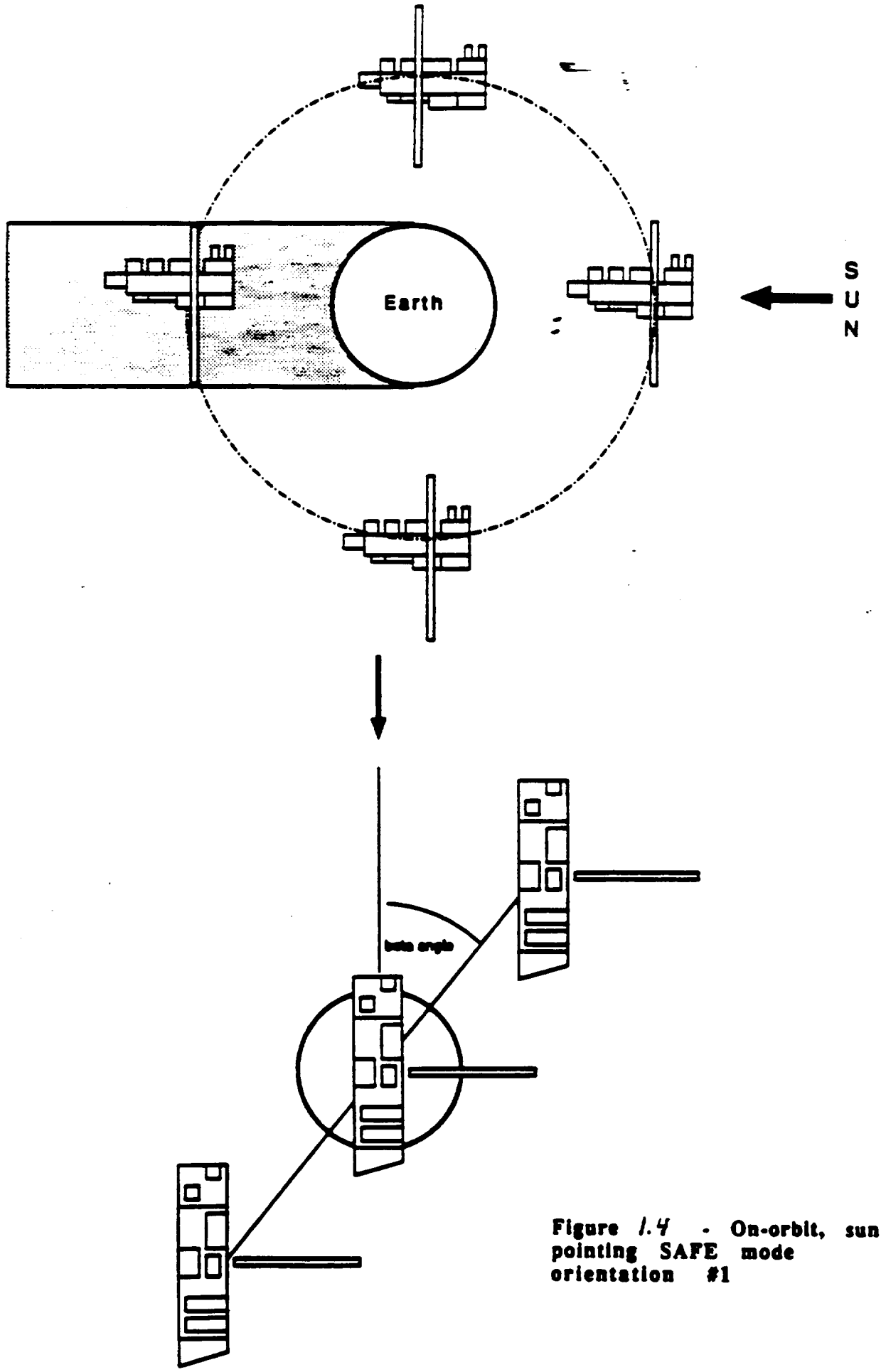

Figure 1.4 - On-orbit, sun pointing SAFE mode orientation #1

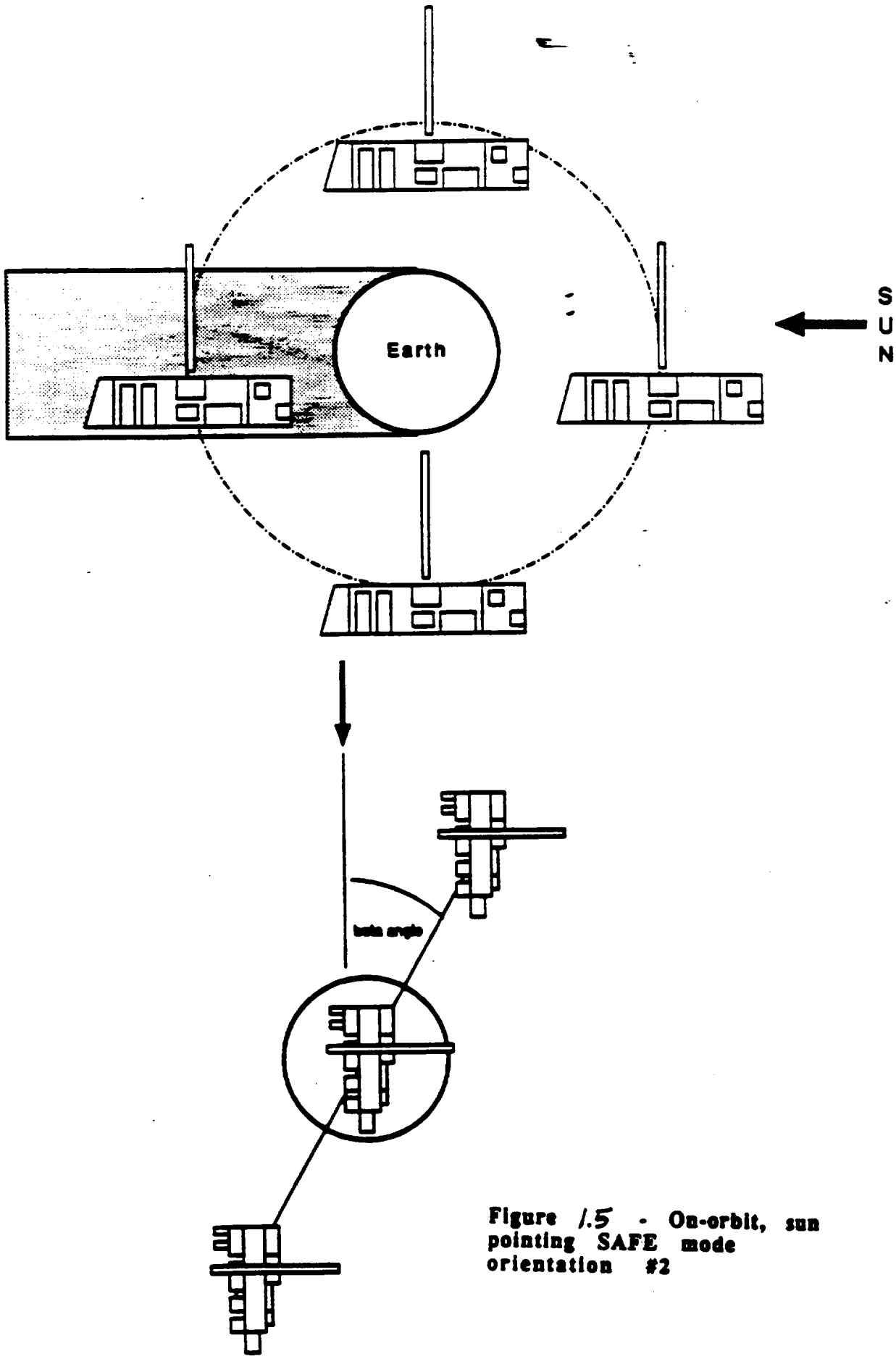

Figure 1.5 - On-orbit, sun pointing SAFE mode orientation #2

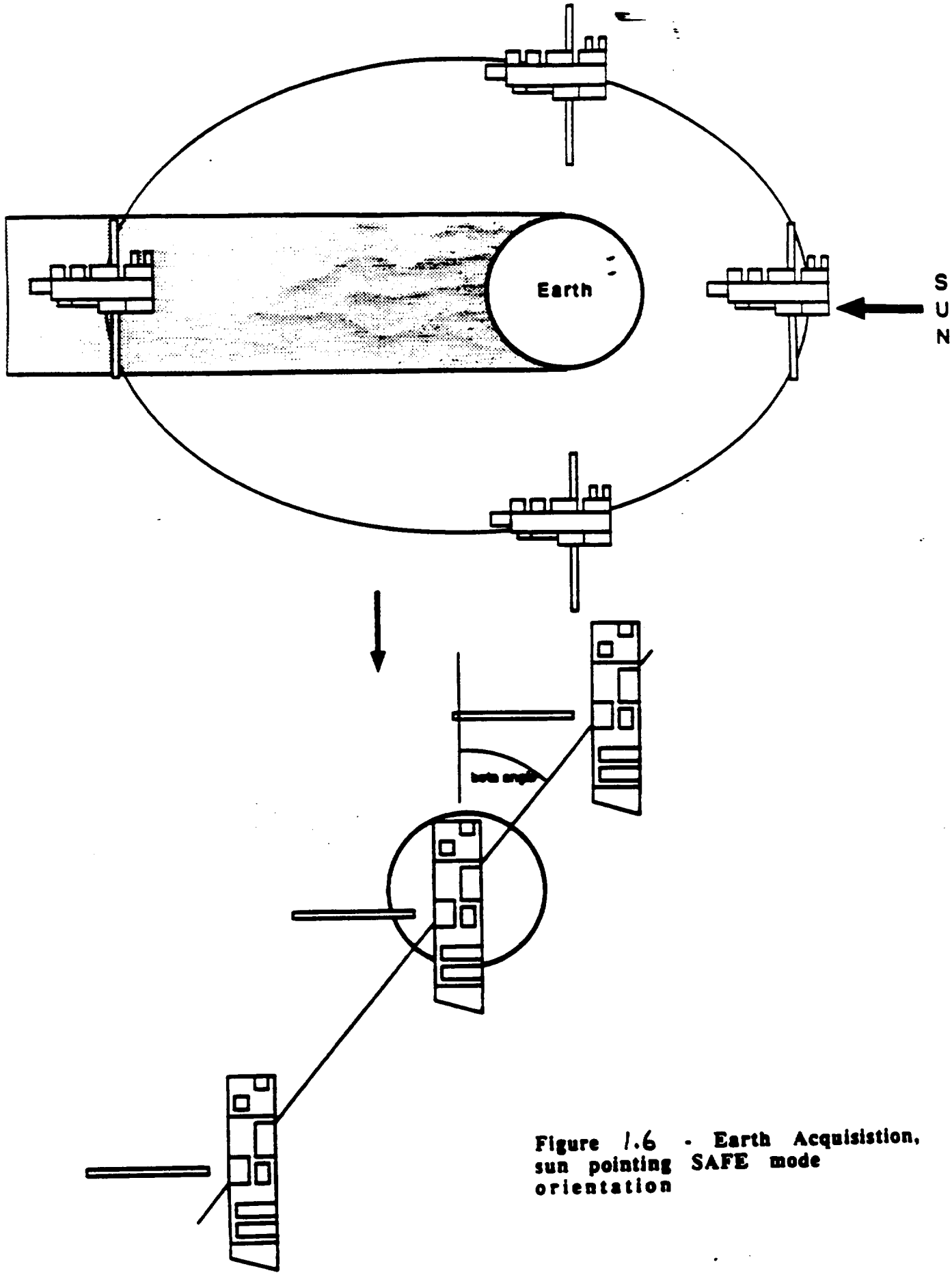

Figure 1.6 - Earth Acquisistion, sun pointing SAFE mode orientation

Table 1.2 : Spacecraft and Equipment Module Analysis Modes

	S/C Phase	S/C Mode	Beta/Envir	S/C Orient	Altitude	Product
L/A SAFail	L/A thru OA	L/A to Surv	15/BOL	earth	550x705	Temps/QhtrL/A
L/A SAFail	L/A thru OA	L/A to Surv	22/BOL	earth	550x705	Temps/QhtrL/A
L/A SAFail	L/A thru OA	L/A to Surv	30/BOL	earth	550x705	Temps/QhtrL/A
L/A SunPt Safe	L/A thru OA	L/A to Safe	NA/BOL	sun-Fig 1.6	550x705	Temps/QhtrL/A
L/A SunPt Safe	L/A thru OA	L/A to Safe	NA/BOL	sun-Fig 1.6	550x705	Temps/QhtrL/A
Science-max	Operational	Science	13.5/EOL	earth-Fig 1.3	705	Tmax
Science-max	Operational	Science	18/EOL	earth-Fig 1.3	705	Tmax
Science-max	Operational	Science	30.8/EOL	earth-Fig 1.3	705	Tmax
Science-min	Operational	Science	15/BOL	earth-Fig 1.3	705	Tmin/QhtrBOL
Science-min	Operational	Science	22/BOL	earth-Fig 1.3	705	Tmin/QhtrBOL
Science-min	Operational	Science	30/BOL	earth-Fig 1.3	705	Tmin/QhtrBOL
Science-min	Operational	Science	[1]/EOL	earth-Fig 1.3	705	QhtrEOL
OnOrbit-Surv	Operational	Survival	15/BOL	earth-Fig 1.3	705	Temps/Qhtrsurv
OnOrbit-Surv	Operational	Survival	22/BOL	earth-Fig 1.3	705	Temps/Qhtrsurv
OnOrbit-Surv	Operational	Survival	30/BOL	earth-Fig 1.3	705	Temps/Qhtrsurv
OO-SunPt Safe	Operational	Safe	NA/BOL	sun-Fig 1.4	705	Temps/Qhtrsafe
OO-SunPt Safe	Operational	Safe	NA/BOL	sun-Fig 1.5	705	Temps/Qhtrsafe
OO-SunPt Safe	Operational	Safe	NA/EOL	sun-Fig 1.4	705	Temps/Qhtrsafe
OO-SunPt Safe	Operational	Safe	NA/EOL	sun-Fig 1.5	705	Temps/Qhtrsafe

[1] Use beta angle producing worst case heater powers as determined by other Science mode cases;
Use Science min dissipations

Science Mode - Minimum

This case is the same as the Science-maximum case with the exception that duty cycles are arranged to provide a thermal worst case cold situation. The S/C orientation is earth pointing and both BOL and EOL environments and material properties are evaluated. The power subsystem is analyzed assuming S/C loads are minimized and that there are no battery cell failures. A single 10 minute TDRSS contact is assumed within an orbit. Instruments are in BOL Science mode, however, no observations are being made (no peak dissipations). This set of cases is used to determine worst case Science mode heater power requirements, both BOL and EOL, for the Spacecraft.

On-orbit (OO) Sun-pointing Safe Mode

This case is similar to the Science mode minimum case but assumes there has been a GN&C failure that has forced the S/C into a sun-pointing orientation. While in this mode, there is no roll control of the S/C. Instruments are assumed to be in an operational state, but not taking Science data. The high rate data, HGA, and DAS systems will not be operating. This mode is analyzed to ensure that component temperatures do not exceed maximum allowable temperatures when zenith or cold space radiators are turned to view Earth and to determine Sun-pointing Safe Mode heater power requirements.

On-orbit (OO) Survival Mode

This case represents a low power availability condition. The Instruments, Star Trackers and high rate data components and DAS components are powered off. They are therefore allowed to drop to their cold start (minimum qualification) temperature limits. The heater power results from this case will be used to determine battery energy balance during this mode.

1.5 Materials, Surface Finishes and Thermal Properties

Table 1.3 shows a summary of the materials, surface finishes and their thermal properties currently used in the EOS Spacecraft and component thermal analyses. Detailed CPHTS thermal/fluid models have documented material properties separately, in Reference 40.

1.6 Thermal Uncertainties and Margin / Contingencies

The application of analytical uncertainties to calculated temperatures and heater powers for the EOS AM Spacecraft will be governed by the Thermal Design Standard, Ref 5. Random, independent and unanticipated variations in properties and environmental conditions, as well as certain mathematical modelling limitations, cannot be effectively treated in the Thermal Math Models (TMMs) developed for the EOS Spacecraft. These variations include:

- joint conductances
- nodal granularity
- assembly tolerances
- mechanical process variables
- thermo-optical property variations
- human error
- MLI effective emittance variation

Table 1.3 : Material Properties

Component	Material	Density lb/incu	Cp W-min/lb-C	k W/in-C	Absorbtivity BOL	Absorbtivity EOL	Emissivity BOL	Emissivity EOL	
MLI									
Outer Layr	Al Kapton(SAK)	NA	NA	NA	0.4	0.55	0.75	0.75	Space facing; 1mil erosion
Inner Layer	Al Kapton(SAK)	NA	NA	NA	NA	NA	0.72	0.72	Core facing
Internal	Al Mylar(DAM)	NA	NA	NA	NA	NA	0.11	0.11	thru emiss : 0.025 nominal
Tape(Radiator	5-mil AgFEP	NA	NA	NA	0.1	0.25	0.8	0.8	
Tape	Double Sided Al Kapton	NA	NA	NA	0.13	0.16	0.03	0.05	
Paint-Black	TBD	NA	NA	NA	NA	NA	0.85	0.85	
Box External	Black Anodize	NA	NA	NA	NA	NA	0.85	0.85	
Paint-White	S13/LO	NA	NA	NA	0.2	0.35	0.87	0.87	9mil on Al
Radiator F/S									
	Al 6061-T6	0.098	7.27	3.9					
	Al 5005-T6	0.098	7.27	5.1					
	UHMS GR/EP	0.058	7.27	0.731					parallel to fibers
	(quasisotropic)			0.013					perpen to fibers
Honeycomb Core									
	Al 5052	1.6lb/cuft	7	0.033					
		4.5 lb/cuft	7	0.092					
	Al 5056	1.6lb/cuft	7	0.033					
S/C tubes	UHMS GR/EP		7.27	1.306					parallel to 0layer
				0.157					perpen to 0 layer
				0.013					thru thickness
Node Fittings	Titanium	0.16	4.27	0.185					
Battery Slves	Al 6061-T6	0.098	7.27	4.568					
Battery Base	Al 6061-T6	0.098	7.27	4.568					

Component	Material	Density lb/incu	Cp W-min/lb-C	k W/in-C	Absorbtivity BOL	Absorbtivity EOL	Emissivity BOL	Emissivity EOL	
I/F Conductance									
CCHP-CCHP	Eccobond 56C			10W/sqin-C					
CCHP-Spacer	Eccobond 56C			10W/sqin-C					
CCHP-F/S	FM73			3W/sqin-C					2-mil bond layer
H/C-F/S	FM73			0.25W/sqin-C					
Battery I/Fs									
Base-F/S	Chotherm 1679			0.0659 W-in/sqin-C					
Slv-Base	RTV566			0.009W-in/sqin-C					
Slv-cell	Chotherm 1671			0.0586W-in/sqin-C					
Box to F/S									
wet jt(LT20sqin)	RTV			1 W/sqin-C					
wet jt(GT20sqin)	RTV			0.5 W/sqin-C					
dry joint	no filler			0.1W/sqin-C					
isolated	G-10 epoxy			0.0066					

- Thermo-optical (T-O) property degradation due to unanticipated contamination or solar activity
- design evolution
- environmental fluxes
- component dissipations

The analytical uncertainty term must be added to the thermal model raw temperature output to represent a worst case prediction. For the EOS Spacecraft, this uncertainty term is defined to be 5C added to or subtracted from the maximum or minimum temperature predicts respectively or 1C added to any gradient predicts. Uncertainty is applied to heater power estimates by increasing the analytical heater control set point to 5C above the minimum allowable component temperature. A design requirement for Spacecraft PDR is to ensure that worst case temperature predicts, with uncertainty included, are not outside the documented allowable ranges for all mission phases and modes.

Thermal margins and contingencies are applied separately from the thermal uncertainty term described above. The EOS CEI specification, Reference 6, requires that a 25% margin, over the orbit average power needed, be provided on heater electrical resistance sizes (in watts). Constant Conductance Heat Pipes (CCHP) performance requirements are determined considering the single worst case CCHP failure for each heat pipe panel. CPHTS design loads reflect the UIID for those Instruments.

Addition of power dissipation contingencies, for this stage of the S/C design, is as directed in Reference 7. The level of contingency applied to a given unit is determined by its assigned accuracy class (AC). AC is a measure of the unit's design heritage and level of maturity. The AC definitions and associated percentages are shown below. Power dissipation values shown in Section 2 represent both hot and cold case estimates which must be increased by the appropriate AC percentage before being used in any analysis.

Accuracy Class 1 : 2%
Accuracy Class 2 : 5%
Accuracy Class 3 : 10%
Accuracy Class 4 : 20%

AC contingency is not applied to mass estimates for the thermal analyses. Not applying contingency causes wider orbital temperature swings yielding the most conservative results.

1.7 Component To S/C or EM Interface Definition

Unless specified otherwise, all temperatures referenced in this document apply to the component baseplate, for conductive designs, and the component radiator external surface, for radiative designs. A summary of the component temperature requirements that drive the thermal design of the EOS Spacecraft is included in Section 2. Other critical temperature or stability requirements are included, as available.

All components should be designed to meet the heat flux density requirements defined in the GIIS, Reference 8, for components mounted on Instrument mounting panels and in the GIS, Reference 9, for all other S/C components.

Exceptions to this must appear in the component performance specification and will be carried in the Mechanical Parameter tables of Section 2.

1.8 TCS Component Descriptions

In order to maintain component and S/C temperatures within their allowable temperature ranges while minimizing heater power requirements, various thermal components and materials are used. These include heaters, thermostats, thermistors and temperature sensing assemblies (TSAs), Heater Control Electronics (HCEs), Constant Conductance Heatpipes (CCHPs), Multi-Layer Insulation (MLI) and multiple surface finish materials (paints, coatings, tapes, etc). To monitor and control some of these components, either autonomously or from the ground, C&DH and software resources must be provided. The Thermal Control Subsystem (TCS) allocation for the number of thermal telemetry points, command functions, and HCEs are defined in the TCS performance specification, given as Reference 10. The following sections describe a few of the thermal components and the methods used to represent them in the thermal models.

1.8.1 Heater Control Modelling Techniques

For the EOS-AM program, heaters are applied directly to the item they are controlling such as an electrical component or a fitting. Generally, these heaters are controlled by HCEs. HCE2 designs (2, 2A, 2B) are the most widely used on the S/C. They utilize thermistors to sense the temperature of the component being controlled, then apply power when required in a static, on/off fashion. HCE3 is used only in the control of the CPHTS components while HCE5 controls the temperature and gradient of the battery cells and panel. This HCE incorporates Pulse Width Modulated control and allocates a primary and backup circuit to every battery 3-pack cell configuration.

The most critical item when modelling heater control is determination of the appropriate set points. To meet Fault Detection and Isolation Recovery (FDIR) requirements, both sides, primary and back-up, of each HCE is enabled on even if the side is not operating. To keep both sides of an HCE from coming on together, the primary and back-up circuits have staggered set points. The thermistors used to control the HCEs have a 2C operation bandwidth and are susceptible to 1C of drift. In order to minimize heater power requirements, it was decided, with concurrence by the GSFC thermal counterpart, that the primary circuit would maintain the component above its minimum design temperature. In the event of a HCE circuit failure, the back-up HCE would maintain the component at a temperature slightly below the minimum design temperature. Exceptions to this include components that are being allowed to drop to their cold start or minimum qualification temperature when powered off. To ensure these components are not damaged when powered on, the heaters maintaining them will have both primary and back-up circuit set points defined above the minimum cold start limit. Other exceptions include temperature critical components, such as the batteries and propellant-wetted components (ie. thruster valves). These exceptions are noted in the tables of Section 2. Modelling uncertainties, as described in Section 1.6, must also be added to heater set points before they are used in the thermal models. Set point examples, including uncertainties, are shown below.

Operating design temp. limit	: -10 C
Back-up heater set point bandwidth	: -12C to -10C
Primary heater set point bandwidth	: -10 C to -8 C
Primary set point with uncertainties	: -5C to -3C
Cold start temp. limit	: -20C
Back-up heater set point bandwidth	: -20C to -18C
Heater set point drift allowance	: -18C to -17C
Primary heater set point bandwidth	: -17C to -15C
Primary set point with uncertainties	: -12C to -10C

1.8.2 Heatpipe Descriptions and Modelling Techniques

CCHPs are currently baselined to be included in three EM designs; the Power EM, the Recorder EM and the DAS panel. CCHPs are also included in the CPHTS radiator designs. Details regarding the design of these CCHPs are included in the CPHTS analysis report, Reference 40. Design of the CCHPs and the panels in which they are embedded follows the guidelines set forth in the Design Standards documented as References 11 and 12. The actual shape and length of the CCHPs depends on the design and location of the component or part from which heat is being removed. For this reason, CCHP designs can not be finalized until the component design and EM layout have been finalized.

All heatpipes used in the EM designs are 0.5" OD extruded pipes with mounting flats on two opposing sides. The CCHP material is 6063-T6 aluminum with anhydrous ammonia as the working fluid. The CCHPs are bonded to the internal side of panel's equipment mounting facesheet. Since in all cases, the panel is thicker than the CCHP, a 6061-T6 aluminum spacer is used to take up the extra space. One side of this spacer is bonded to the CCHP; the other side is bonded to the internal side of the panel's external radiator facesheet. A cross section of the CCHPs and Spacers are shown in Figure 1.7. Material properties for the CCHPs and for the panel to CCHP interfaces are given in Table 1.3.

1.8.3 Multi-Layer Insulation (MLI)

The baseline MLI blanket for EOS AM consists of 15 layers:

1 Outer layer (space facing)	Single-sided Aluminized Kapton (SAK)
1 Inner layer (core facing)	Single-sided Aluminized Kapton (SAK)
13 Internal layers	Double Aluminized Mylar (DAM) w/Dacron mesh separators

The effective thru-emissivity of this blanket is based on similar heritage lay-ups that have been thoroughly tested, albeit for different layer quantities. Figure 1.8 illustrates graphically how the EOS MLI thru-emissivity value range was determined based on heritage UARS and DSCS data.

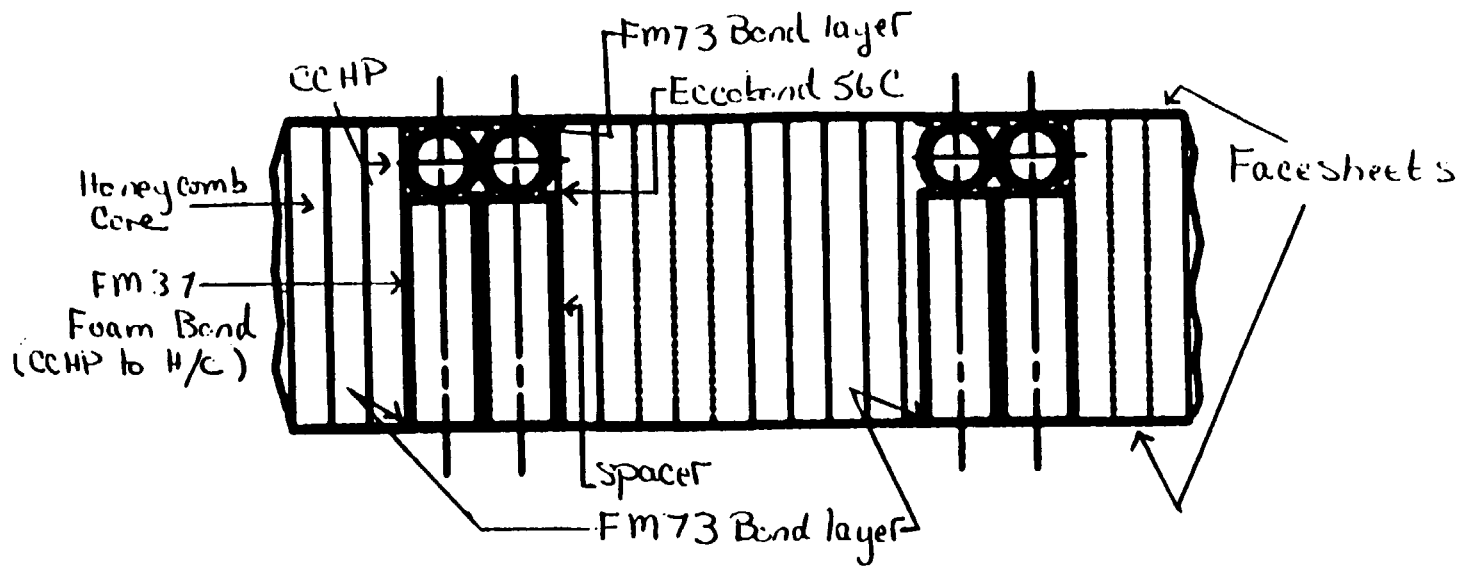

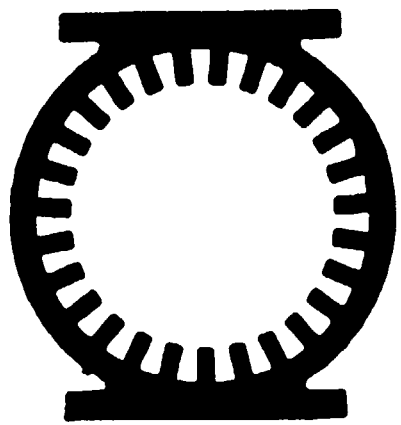

Figure 1.7 : Heatpipe Panel and CCHP Cross Section

Figure 1.8
EOS MLI thru-emissivity

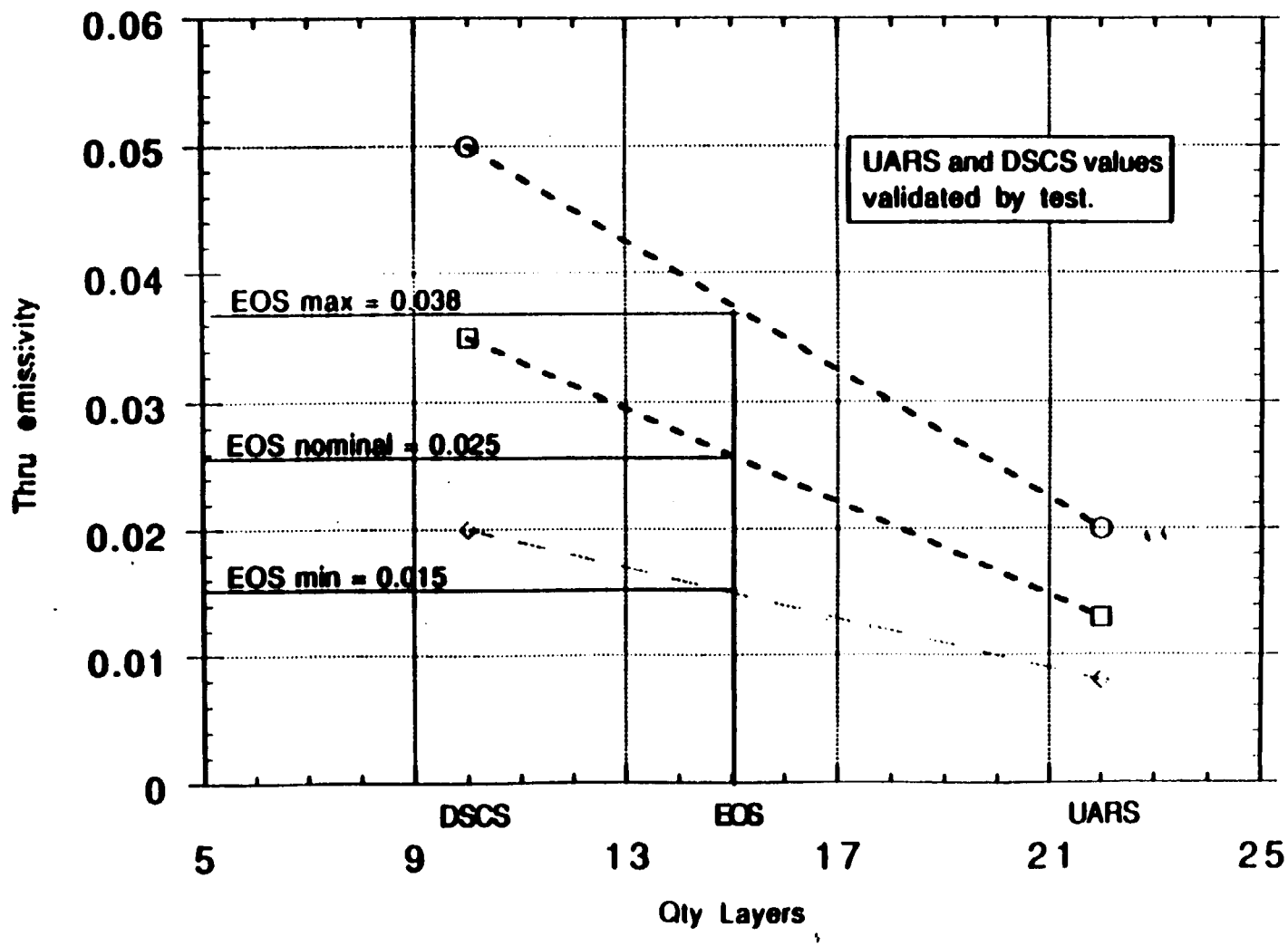

1.9 Launch Vehicle Interface

Currently, the EOS AM Spacecraft could be launched on either the Titan IV or Atlas IIAS launch vehicles (LVs). Both of the potential LVs have unique thermal parameters that must be included in a detailed launch/ascent analysis, including: Air Conditioning (A/C) capabilities (temperature, flow rate, etc) for on-stand analysis (especially batteries), fairing temperature profile and emissivity, venting air flow during ascent, and lift capability (free molecular heating values are a function of insertion altitude). These analyses will not be performed until after LV selection and delivery of the required thermal data.

Based on the minimum potential A/C temperature and flowrate of the potential LVs obtained from Reference 13, analyses for S/C PDR will assume a 10C initial temperature for all components, except batteries and PM hydrazine tanks. It is estimated that batteries and tanks will not be below 20C on-stand, therefore this value is to be used as their initial temperature. Heater power estimates for Launch/Ascent modes will be based on these values.

Section 2 Housekeeping Design & Analysis

2.1 General Descriptions & Guidelines

The EOS-AM S/C is broken into two basic sections; housekeeping equipment and Instruments. This section deals with the description and operation of the housekeeping equipment which is divided into distributed equipment and equipment located in Equipment Modules (EMs). Figure 2.1 shows the location of the major EOS-AM assemblies and distributed equipment.

In order to begin the S/C housekeeping design and analysis tasks, some basic guidelines were developed. These involve definition of component surface finishes, mounting assumptions, temperature ranges, etc and are described below. Specific information regarding each component is included in the remainder of Section 2.

The temperature ranges defined for this program are derived from the PAR, Reference 14, and the Verification Specification, Reference 15, and are listed below.

> operating design range - The temperature range (min to max) a component is allowed to normally and repeatably experience, in any S/C mode, while that component is powered on.
> nonoperating design range - The temperature range (min to max) a component is allowed to normally and repeatably experience, in any S/C mode, while that component is not powered on.
> accep (op/nonop) ranges - A range +/- 5C outside the design ranges used during acceptance testing of components or assemblies.
> qual(op/nonop) ranges - A range +/- 10C outside the design ranges used during protoflight (qualification) testing of components or assemblies.
> cold start - minimum temperature at which a powered off component can be safely powered on without damage.

Component operating and nonoperating temperature ranges are defined in the GIS, Reference 9, and the component performance specifications. According to References 6 and 16, the thermal design must maintain a component within its operating design temperature range, after uncertainty has been applied, any time the component is operating. Reference 16 states that, generally, when a component is not operating, the thermal design must maintain its temperature, after uncertainty has been applied, above its cold start or minimum operating qualification temperature range. When a nonoperating component is powered on, it will not be expected to meet full performance until it has self heated to its operating temperature range. Exceptions to this are components that are normally held as nonoperating backup units but that are expected to meet full performance requirements immediately upon being powered on. These units are maintained within their operating design temperature ranges even when powered off. Acceptance and qualification temperature ranges are test ranges used to ensure adequate design margin exists in the component design.

The S/C cases described in Section 1.4 are the basis for the EM and distributed housekeeping analyses. For S/C PDR, Science-min and max and OnOrbit Survival cases will be evaluated using detailed EM models. Launch/Ascent

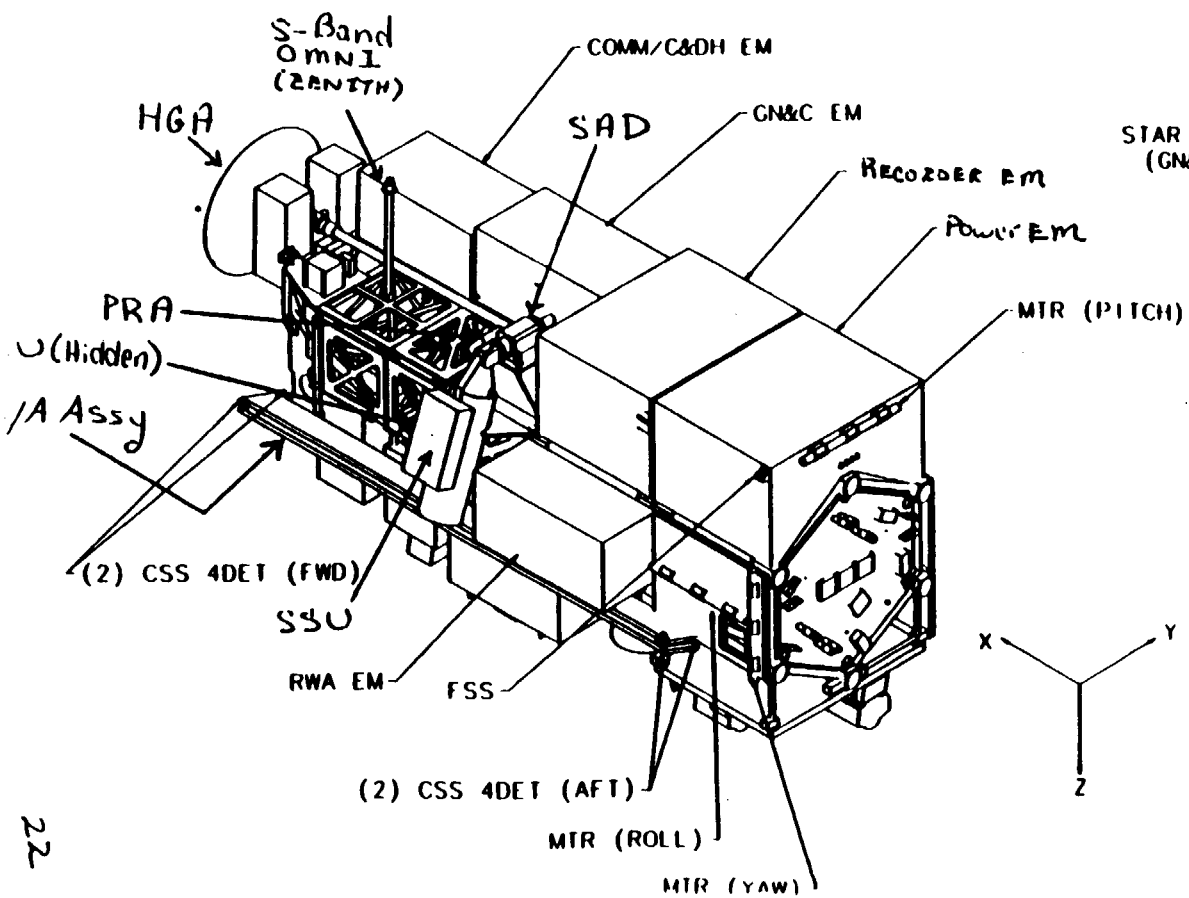

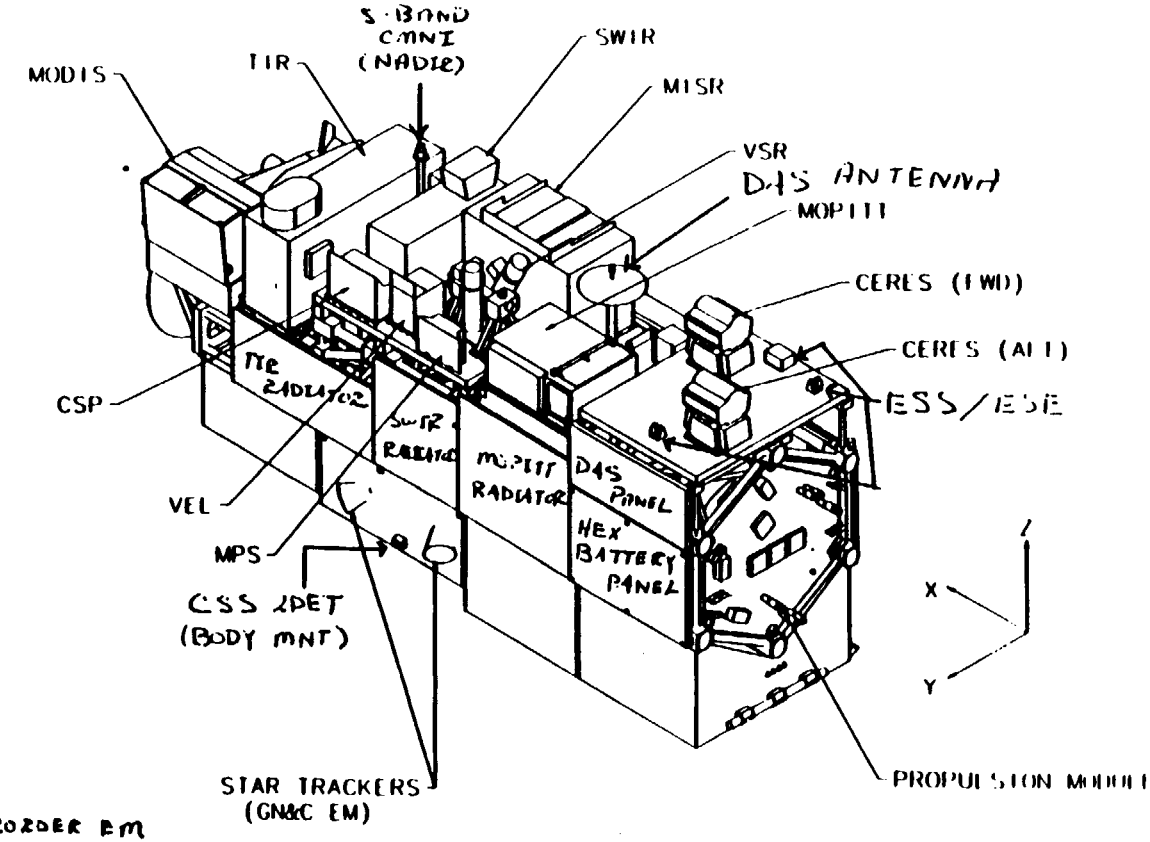

Figure 2.1 : EOS-AM Spacecraft Layout

(nominal and failure scenarios) and OnOrbit Safe modes, as well as the cases evaluated with the detailed models, will be evaluated using the S/C model.

Component power dissipations to be used in each of these cases are given in the remainder of Section 2. Assumptions used to develop these dissipations are also described. Values for constantly operating components were taken primarily from the Mass and Power Report, Reference 17. Information regarding components with transient power dissipation profiles was obtained from the applicable Subsystem Lead Engineer. Where applicable, this information was arranged to represent the worst thermal hot and cold cases. Information regarding Launch/Ascent modes was taken from Reference 4.

It is assumed that the external surface finish of all components is black anodize, unless otherwise noted in their performance specifications or proposals submitted for Subcontracted items. EM analyses will determine whether modification of this finish is required (paints, tapes, etc). to maintain temperature ranges within allowable limits while minimizing heater power requirements. It is assumed that each component attaches to the EM mounting panel via hardware located in its base and that the component base is a flat plate with contact area equalling the component footprint unless otherwise noted. It is also initially assumed that components are mounted to their EM or S/C interface using a dry conductive coupling, ie. a bare surface to surface interface with no thermally conductive or isolating material added. The results of the analyses are again used to determine whether this interface must be enhanced. To increase the conductivity of an interface, an RTV bond or Chotherm gasket would be utilized while G10 spacers would be utilized to thermally isolate a component from its mounting interface.

Solar entrapment between the EMs is minimized by the use of gap blankets that are placed across the openings between the EMs. This allows the use of aluminized kapton on the +/- X external surfaces of the EMs that directly view each other rather than MLI.

2.2 : Power EM and Battery Hex Panel

The Power EM and Battery hex panel mechanical layouts are documented in Reference 18 and shown in Figures 2.2 and 2.3. Panel materials, stayout areas and overall structure and radiator dimensions are also shown in these figures. The Power EM (-Z) radiator panel utilizes embedded CCHPs to remove heat from the charge and discharge Field Effect Transistors (FETs) located in the Battery Power Conditioners (BPCs). These CCHPs are located as shown in Figure 2.4. The analysis of panels with embedded CCHPs is as described in Section 1.8.2. Figure 2.5 shows the 3-pack battery cell assembly concept. Figures 2.6 through 2.9 show the details of the battery sleeve, baseplate and panel designs.

Heater control and modelling is as described in Section 1.8.1. HCE5 design is used to control the batteries while HCE2 designs are used to control all other components requiring heater power. References shown in the tables described in this section are given in the List of References found at the beginning of this document.

Material and surface finish properties used in the analysis of this panel and EM are given in Table 3. Surface finishes for the battery hex and each of the EM panels are listed below. EM and panel analyses will validate that these finishes are appropriate and determine application areas for panels utilizing multiple finishes.

Zenith(-Z)	:	external:	silver teflon and MLI
	:	internal:	black paint
Base(+Z)	:	external:	aluminized kapton
	:	internal:	aluminized kapton
Sunside(-Y)	:	external:	MLI
	:	internal:	black paint
Space(+Y)	:	external:	silver teflon and MLI
	:	internal:	black paint
End(-X)	:	external:	MLI
	:	internal:	black paint
End(+X)	:	external:	aluminized kapton
	:	internal:	black paint

Mechanical parameters, including component size, weight, accuracy class and mounting panel definition are shown in Table 2.1. Any exceptions to component surface finish, contact area or component to panel interface general guidelines described in Section 2.1 are also noted in this table.

Table 2.2 shows allowable component temperature ranges, as defined in Section 2.1, for components located in the Power EM and on the Battery hex panel. These temperatures are defined as the average component baseplate temperatures unless otherwise noted. Table 2.2 also identifies all known component temperature stability or gradient requirements. Blanks in the columns mean no stability or gradient requirements exist for that component.

The power profiles given in Tables 2.3 through 2.5 combine the effects of currently defined failure cases and varying S/C load requirements with the cases described in Section 1.4 for the power subsystem. S/C power loads, as defined in Reference 19, are 2530W, 2330W and 1740W for the Science mode maximum and minimum and Survival mode cases respectively. BPC failure

conditions considered include the loss of one channel and the effect of losing the SCC which causes the charge curve for the batteries to default to a preset value impacting the BPC dissipation profile. Battery failure conditions to be considered include the event of a single cell failing short or open and the effect of losing the SCC. In the event a battery cell fails open, a switch is used to short the open cell out of the circuit. This switch dissipates an insignificant amount of heat, causes an open cell failure to look like a short and does not impact the thermal design of the batteries.

Power dissipations for components that are constantly dissipating are shown in Table 2.3.Transient battery cell dissipation profiles are given in Tables 2.4 while BPC channel dissipations are given in Table 2.5. Columns A show the Science-min and OnOrbit Safe mode dissipation profiles for a single battery cell and a single BPC channel, respectively. Both profiles assume a 2330W S/C load and an operational SCC. Table 2.4 A assumes no battery cell failures and Table 2.5 A assumes a single BPC channel failure. Columns B show Science-max case dissipation profiles for a single battery cell and a single BPC Channel, respectively. Both profiles assume a 2530W S/C load and an operational SCC. Table 2.4 B assumes a single battery cell failure and Table2.5 B assumes no BPC channel failures. Columns C show the Launch/Ascent and Survival Mode dissipation profiles for a battery cell and BPC channel, respectively. Both profiles assume a 1740W S/C load and an operational SCC. Table 2.4 C assumes no battery cell failures and Table 2.5 C assumes a single BPC channel failure.

The values listed in these tables are estimates that must be increased to reflect the appropriate accuracy class contingencies as described in Section 1.6 before being used in any analysis. Exceptions to this include components with load related power dissipations such as the harness, batteries and BPCs where the required contingencies have already been applied to the loads used to calculate the component power dissipations.

Panel Materials

All panels (exceptions noted below)
H/C Core : 1.6 PCF Al 5056
Facesheets : Al 6061-T6 , 0.015" th
Panel Thickness : 1"

(-Z) Radiator
H/C Core : 1.6 PCF Al 5052
Facesheets : Al 5005-H34 , 0.015" th
Panel Thickness : 2"

(+Y) Radiator
H/C Core : 4.5 PCF Al 5052
Facesheets : Al 5005-H34 , 0.040" th
Panel Thickness : 1.5"

Kinematic Mnt Stayouts
2 places (+Y panel, lower corners); 3.5" x 3.5" each

MAGE Attach Pt. Stayouts
4 places (-Z panel, each corner); 2.5" x 2.5" each

Radiator Areas (overall)
-Z radiator : 70.65" x 54.5"
+Y radiator : 54.5" x 37.7"

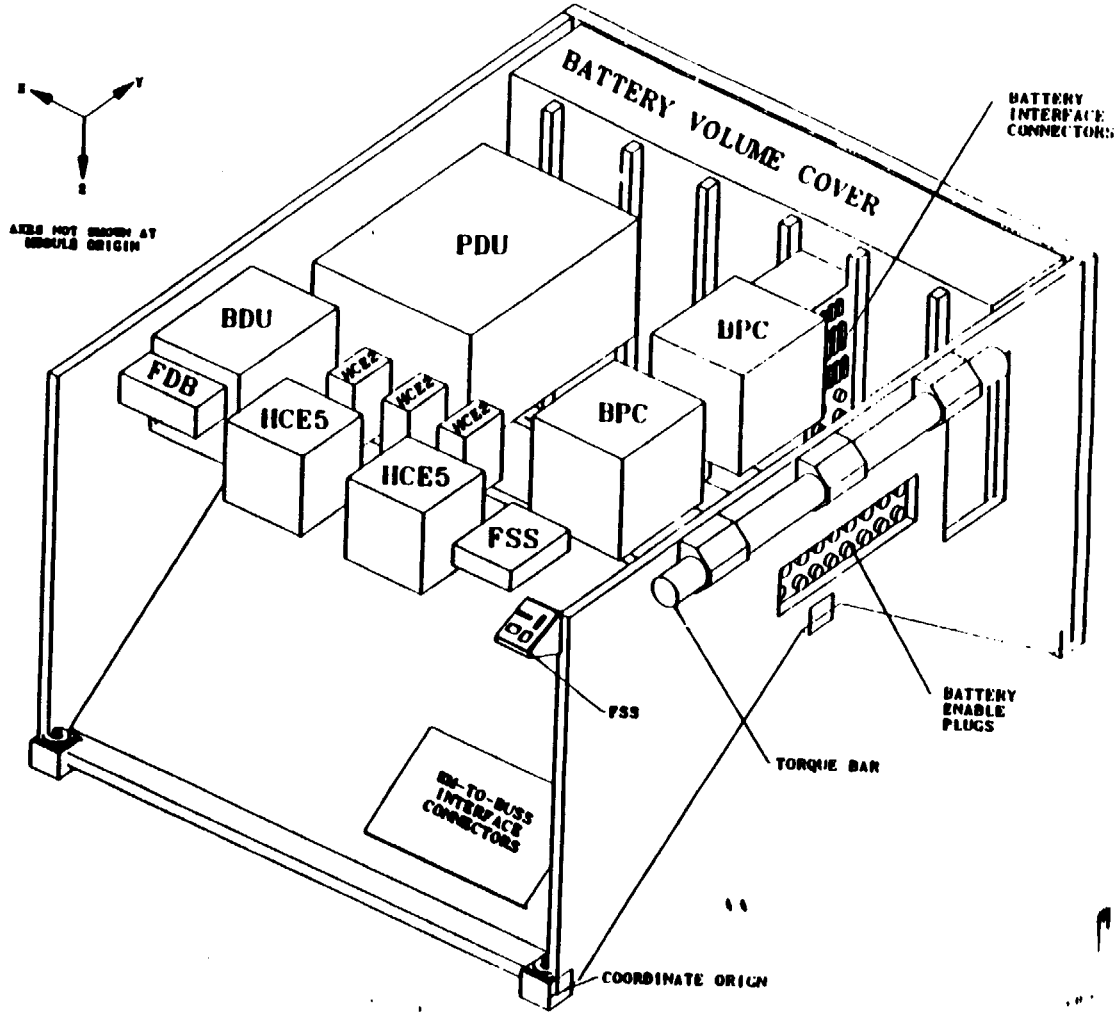

Figure 2.2 : Power EM Equipment Layout

Panel Materials
H/C Core : 4.5 PCF Al 5052
Facesheets : Al 5005-H34 , 0.040" th
Panel Thickness : 1.5"

Kinematic Mnt and MAGE Stayouts
6 places (corners & mid(+/- Z))
3" x 3" each

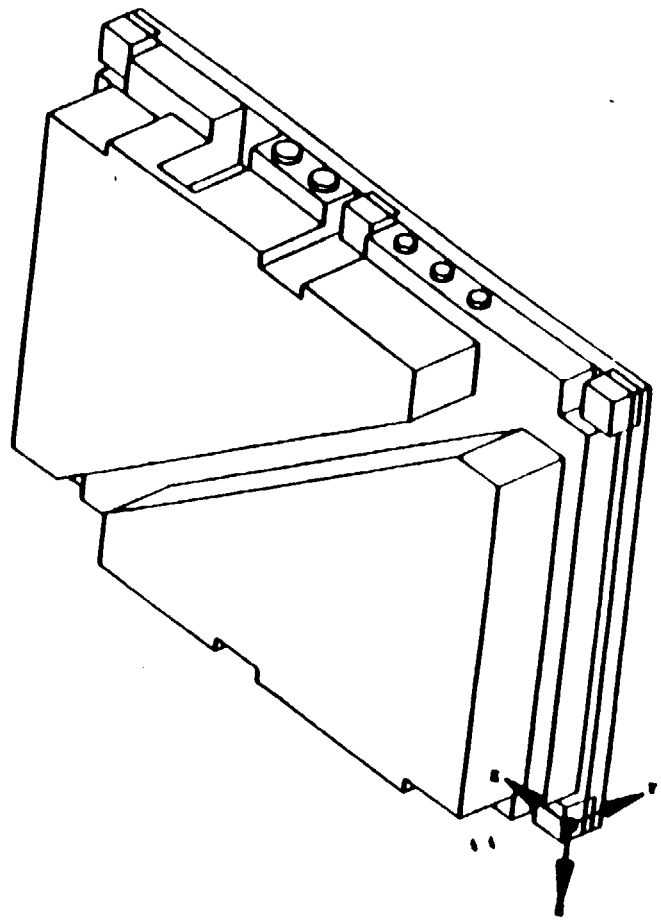

Figure 2.3 : Battery Hex Panel Equipment Layout

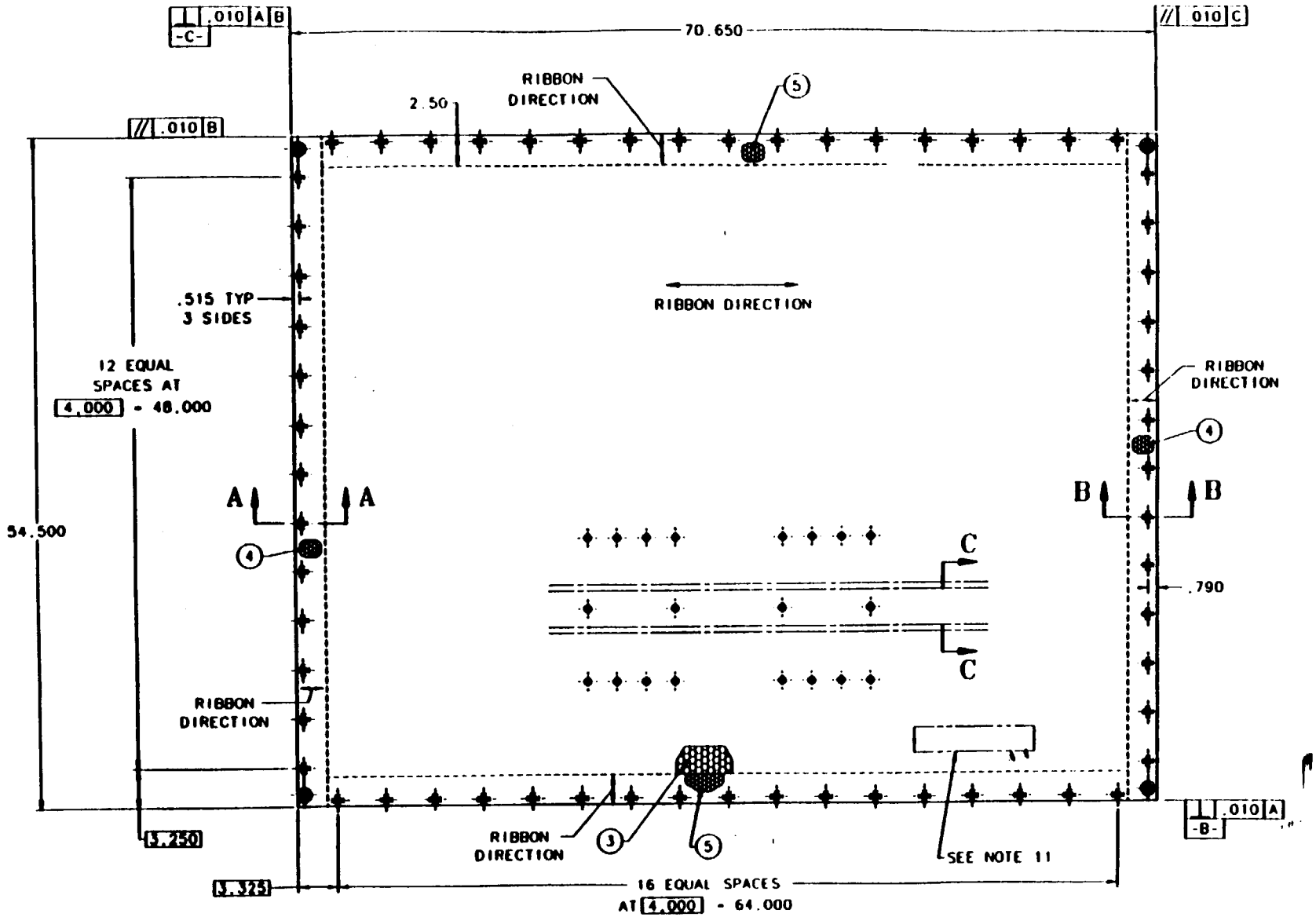

Figure 2.4 : PMAD CCHP Location

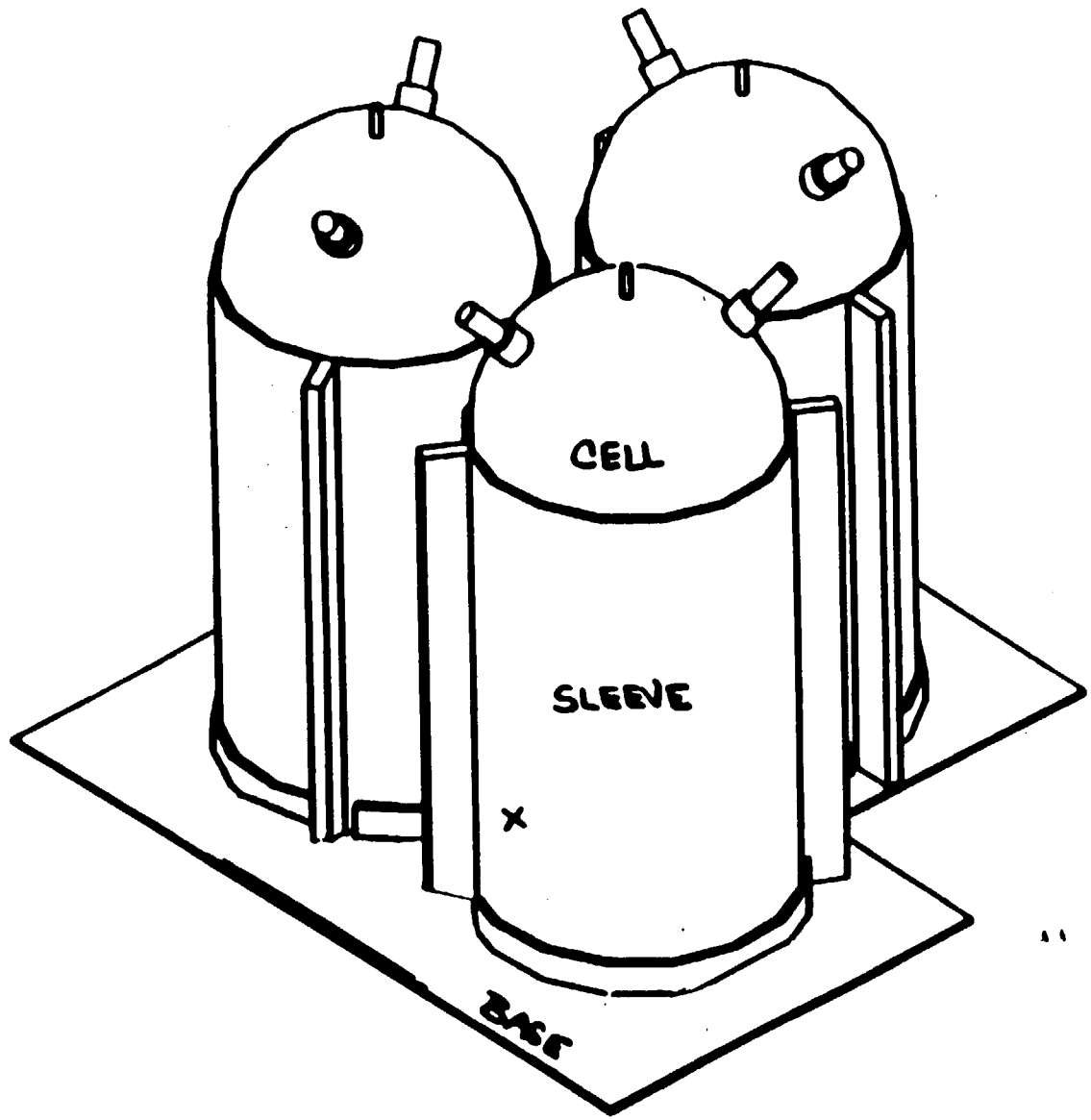

Figure 2.5 : Battery, 3-Pack Assembly

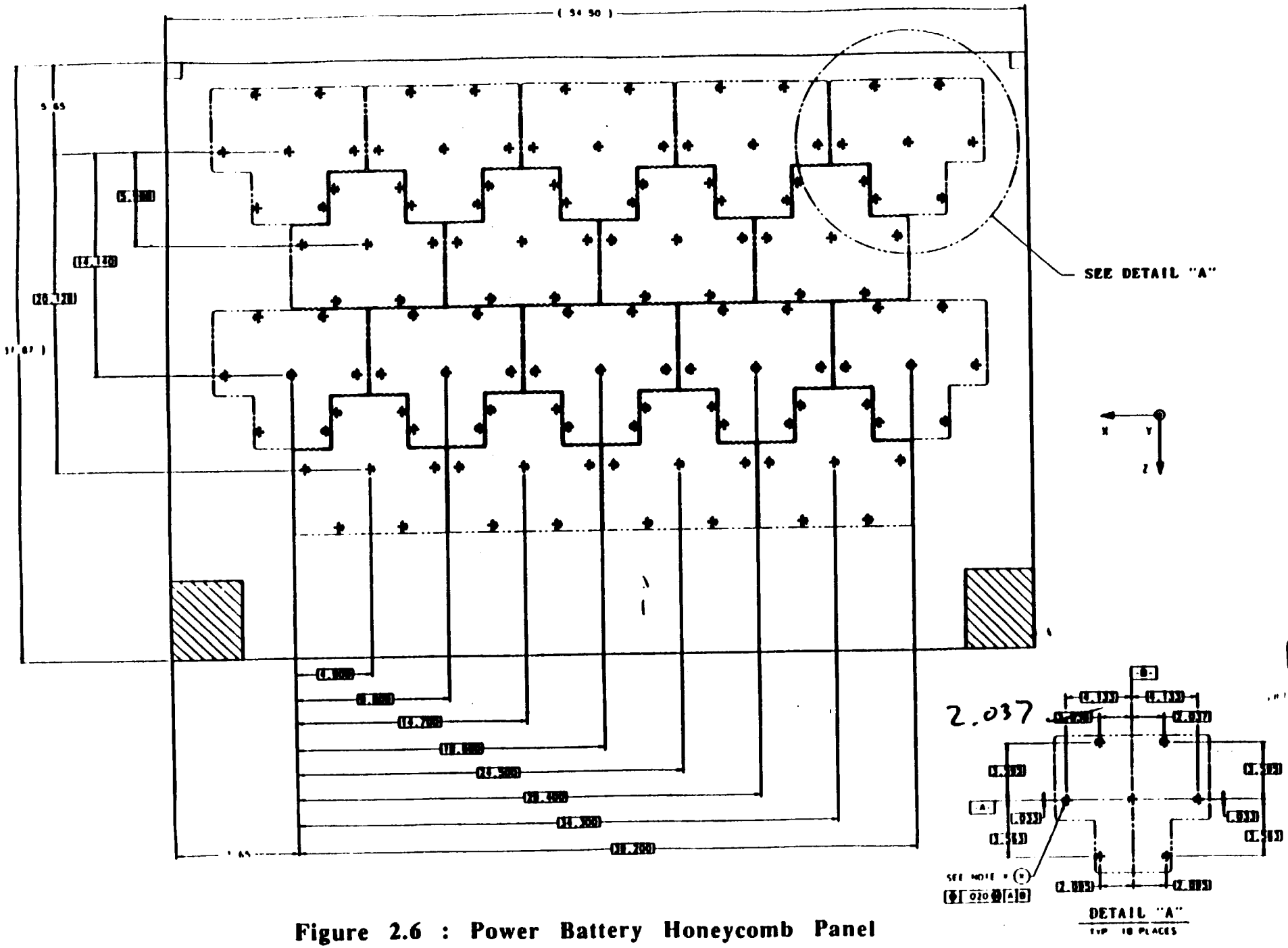

Figure 2.6 : Power Battery Honeycomb Panel

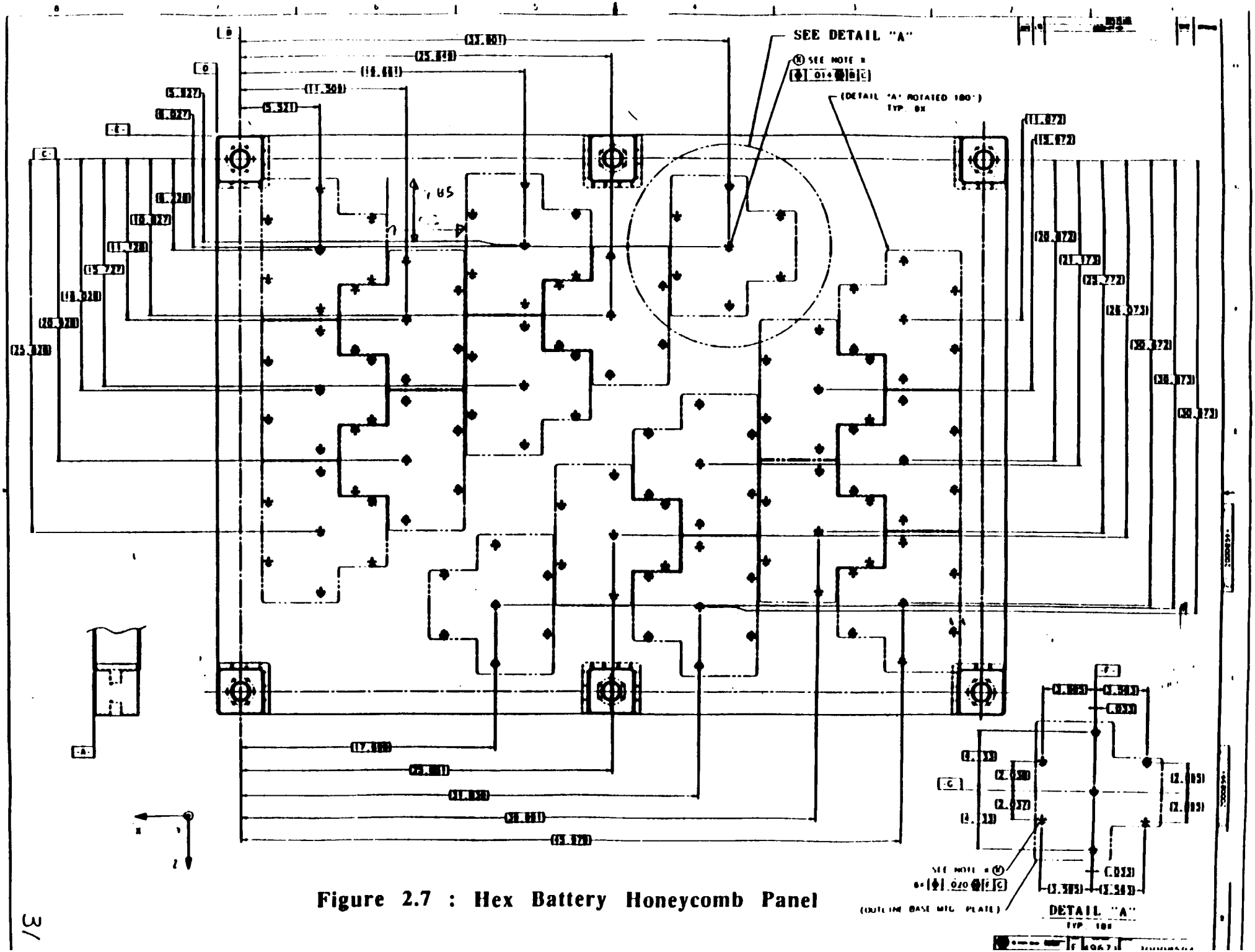

Figure 2.7 : Hex Battery Honeycomb Panel

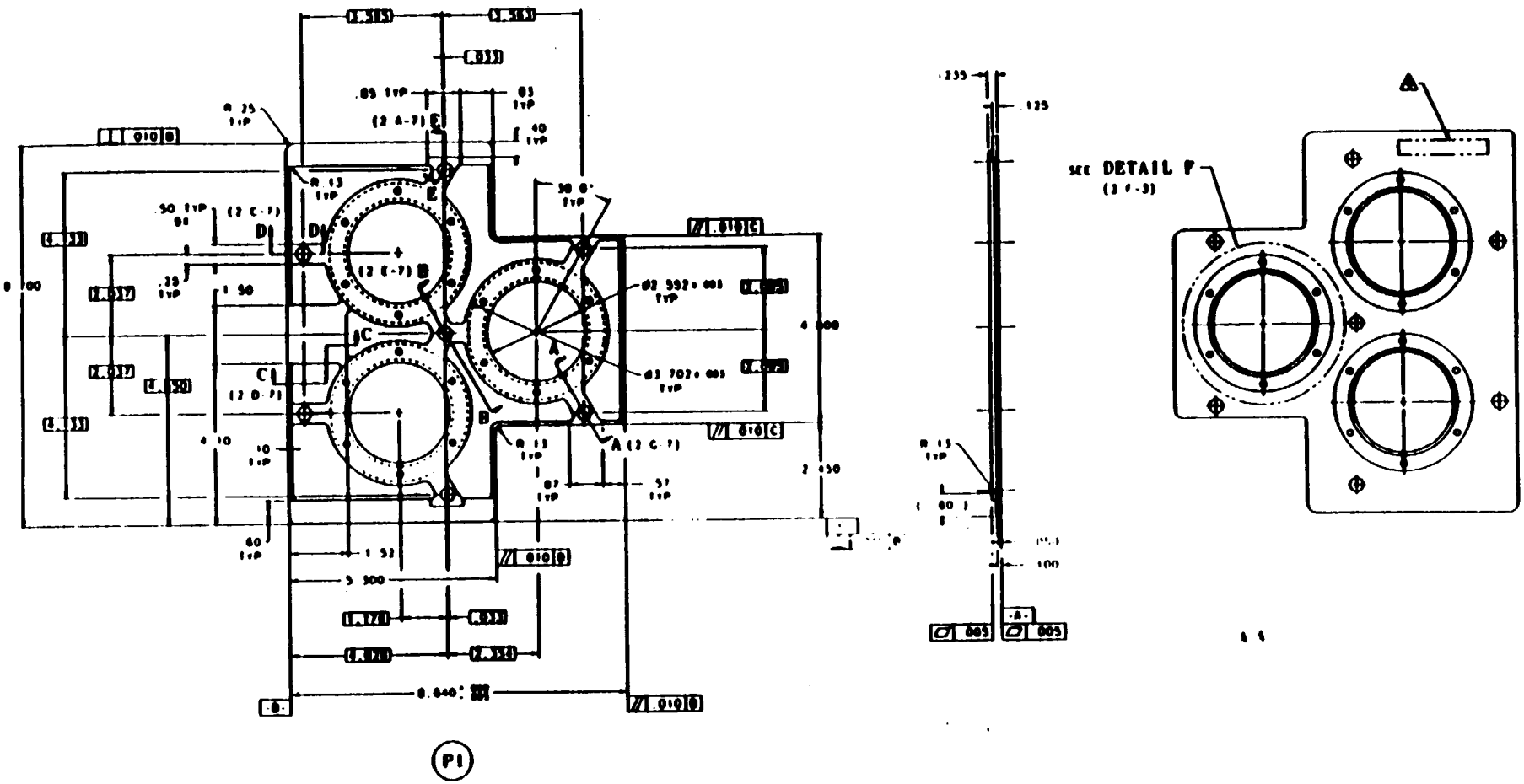

NOTES

1. INTERPRETATION OF DRAWING TERMS AND TOLERANCES PER S30009
2. MATERIAL ALUMINUM ALLOY 6061-T6 PER QQ-A-250/11
3. FINISH BLACK ANODIZE MIL-A-8625 TYPE 2 CLASS 2.
4. MARK PART NO "49671-20040741P1" IN APPROXIMATE LOCATION SHOWN PER S32934CL7A.
5. BAG (CL10) OR TAG (CL8) PER S32936. BAG OR TAG SHALL INDICATE EACH INCLUSIVE WEIGHT AS FOLLOWS "WEIGHT 0.000 LBS" TO WITHIN ±2 OZ.

Figure 2.8 : Battery 3-Pack Mounting Base Details

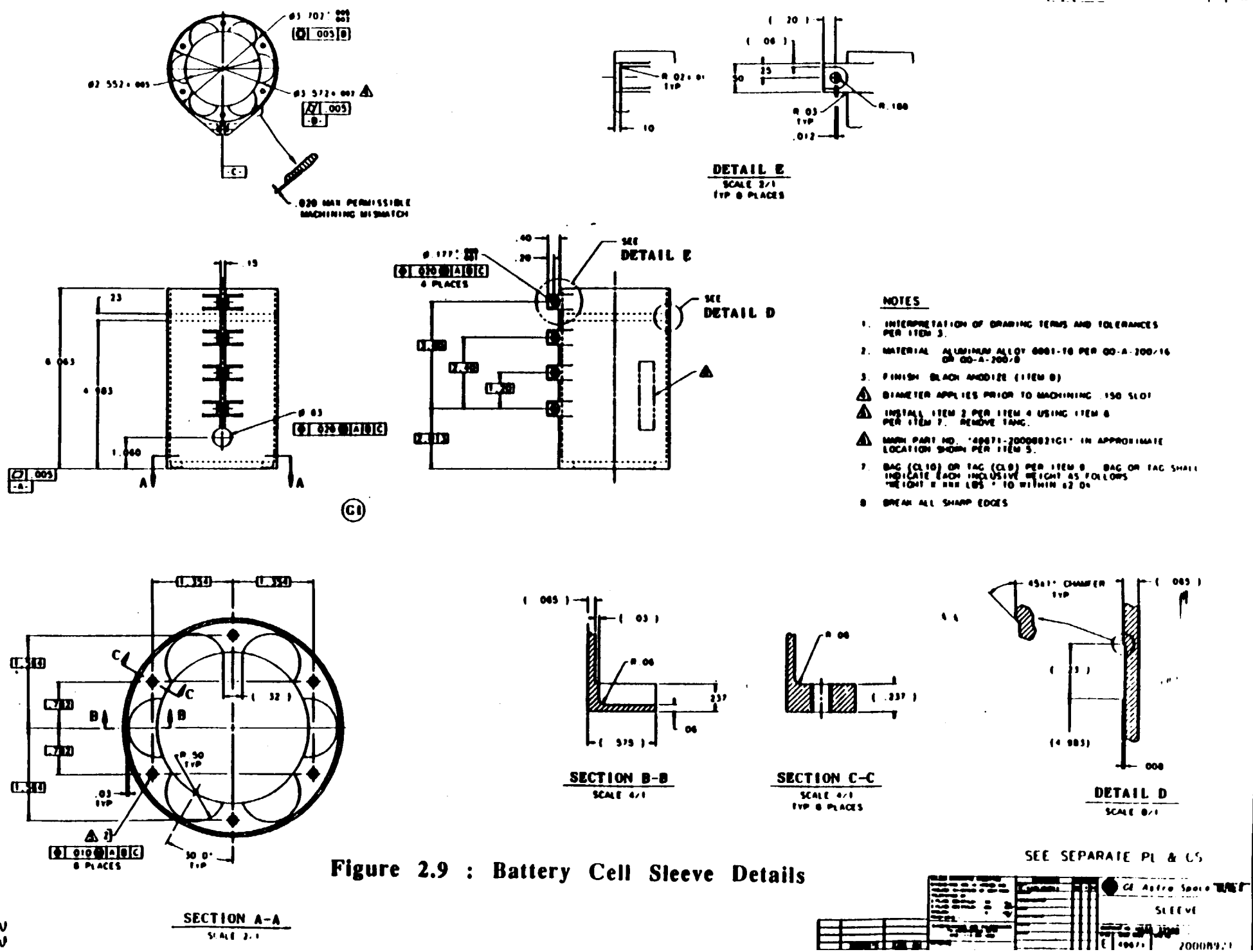

Figure 2.9 : Battery Cell Sleeve Details

Table 2.1: Power EM Mechanical Parameters

Component	Quantity	Mnting Panel	Size LxWxH (inxinxin)	Unit Weight (lb)	Accur Class	Reference	Comments
BPC	2	-Z	9.5X11X10	19.6	4	17	exceeds heat flux req't
PDU	1	-Z	22.4X16.5X11.7	84.7	4	17	
BDU	1	-Z	9.1x13.1x9.5	20.8	3	17	
FSSE	1	-Z	7.8x6x2	2.4	2	17	
HCE2	3	-Z	2.8x5x6.8	0.6	3	17	
HCE5	2	-Z	8X8X8	8	3	17	
Enable Plug	1	-X	TBD	TBD	3	17	
Battery Assy	1	+Y	Figs 2.4 & 2.5	290	3	17	
MTR	1	-Xext	44x2.2	29	2	17	
FSSH	1	-Yext	3.3x4.3x1.7	0.9	2	17	
EM Structure	1	NA	54.5X70.7X39.7	123	3	17	
EM Mounts	6	NA	TBD	2.5	3	17	
Pwr/C&DH Harness	1	NA	NA	93.1	3	17	

Battery Hex Panel Mechanical Parameters

Battery Assy	1	+Y	Figs 2.4 & 2.6	295	3	17	
Panel Structure	1	NA	54.5X38X1.5	30	3	17	
Panel Mounts	6	NA	TBD	2.5	3	17	
Panel Harness	1	NA	NA	TBD	3	17	

Table 2.2 : Power EM and Battery Hex Panel Component Temperature Requirements

Component	Measurement Location	Design Range* (C)	NonOp Range* (C)	Stability[1]	Comments[1]	Reference
Power EM Struc	TBD	-50/80	NA			17
Batt Panel Struc	TBD	-50/80	NA			17
EM/Panel Mounts	TBD	-20/60	-30/70			17
EM/Panel Harness	NA	-5/50	-25/60			17
Enable Plug	TBD	-10/50	-25/60			17
HCE2	baseplate	-24/61	-34/71			17
HCE5	baseplate	-24/61	-34/71			17
BPC	baseplate	-10/50	-25/60			17
PDU	baseplate	-10/50	-25/60			17
BDU	baseplate	-10/50	-25/60			17
FDB	baseplate	-10/50	-25/60			17
FSSE	baseplate	-10/50	-25/60			17
FSSH	cover	-10/50	-25/60			17
MTR	ext surface	-10/50	-25/60			17
Batteries						
avg cell stack	normal op	-5/10			[2]	26
temp limits	off-normal op	-5/20				26
	launch/ascent	-5/30				26
gradients	within stack	3				26
	stack to cell	7				26
	dome to dome	10				26
	cell to cell	3				26
	batt to batt	3				26

* Operating & Nonoperating Acceptance Temp. Range (+/-5 C) outside Design Ranges
Operating & Nonoperating Qual Temp. Range (+/-10 C) outside Design Ranges

[1] Unless otherwise noted, box operates in all S/C modes/phases & has no stability/gradient req't defined

[2] Battery prim/back-up HCE setpts above min design limit

Table 2.3 : Power EM Power Dissipations *

Component	L/A-SA Fail (W)	L/A-SunPtSafe (W)	Science-Max (W)	Science-Min (W)	OO-SunPtSafe (W)	OnOrbit-Surv (W)	Reference
EnablePlug	0	0	0	0	0	0	
HCE2	0.5 each	0.5 each	0.5 each	0.5 each	0.5 each	0.5 each	17,4
HCE5	11 each	11 each	15.5 each	11 each	11 each	11 each	17,4
Harness	**	**	**	**	**	**	17,4, 32
BPC1	Tbl 2.5	Tbl 2.5	Tbl 2.4	Tbl 2.4	Tbl 2.4	Tbl 2.4	17,4, 33
BPC2	Tbl 2.5	Tbl 2.5	Tbl 2.4	Tbl 2.4	Tbl 2.4	Tbl 2.4	17,4, 33
PDU	(ecl/sun)41.7	(eclps)41.7 (sun)42.7	(eclps)41.7 (sun)42.7	(eclps)41.7 (sun)42.7	(eclps)41.7 (sun)42.7	(ecl/sun)41.7	17,4
BDU	8.5	8.5	8.5	8.5	8.5	8.5	17,4
FSSE	2.8	2.8	2.8	2.8	2.8	2.8	17,4
FSSH	0	0	0	0	0	0	17,4
MTR	1.6	1.6	1.6	1.6	1.6	1.6	17,4
Batt Assy (ea	Tbl 2.5	Tbl 2.5	Tbl 2.4	Tbl 2.4	Tbl 2.4	Tbl 2.4	34

* accuracy class contingency must be added to dissipations before using values in analyses. Exceptions are components with load related dissipations (BPC, Batteries and harness)

** Battery & I/F Conn. to PDU harness losses (33.6W see Section 2.2.2) applied to Pwr EM enclosure in S/C model. BPC to PDU harness losses should be added to BPC/PDU diss. values shown above : BPCs-1.2W each; PDU-2.39W.

Table 2.4 : Transient Battery Power Dissipations *

Time* (min)	Battery Cell A: Science-min 54cells operating 2330W load	Battery Cell B: Science-max 53cells operating 2530W load	Battery Cell C: L/A &Surv 54cells operating 1740W load
1	2.679	2.021	2.923
2	2.77	2.123	2.995
3	2.86	2.235	3
4	2.949	2.346	3.136
5	3.038	2.456	3.235
6	3.126	2.566	3.344
7	3.253	2.674	3.451
8	3.39	2.782	3.558
9	3.525	2.941	3.662
10	3.658	3.11	3.766
11	3.789	3.278	3.869
12	3.92	3.444	3.97
13	4.048	3.609	4.07
14	4.203	3.836	4.181
15	4.374	4.123	4.295
16	4.543	4.407	4.409
17	4.709	4.706	4.521
18	4.893	5.003	4.632
19	5.075	5.292	4.758
20	5.253	5.567	4.881
21	5.428	5.836	5.003
22	5.574	6.061	5.122
23	5.658	6.365	5.24
24	5.681	6.538	5.357
25	5.647	6.623	5.472
26	5.532	6.763	5.585
27	5.339	6.767	5.697
28	5.14	0.646	0.549
29	0.588	0.646	0.55
30	0.588	0.647	0.55
31	0.588	0.647	0.55
32	0.588	0.648	0.551
33	0.588	0.648	0.551
34	0.588	1.346	0.551
35	1.052	1.683	0.884
36	1.242	2.011	1.007
37	1.42	2.267	1.121
38	1.585	2.536	1.236
39	1.724	2.787	1.328
40	1.868	2.949	1.416
41	2.016	3.115	1.507

Table2.4 : (continued)

Time* (min)			
42	2.107	3.253	1.599
43	2.195	3.358	1.664
44	2.284	3.547	1.719
45	2.357	3.621	1.775
46	2.415	3.695	1.831
47	2.473	3.755	1.873
48	2.529	3.816	1.91
49	2.569	3.873	1.947
50	2.611	3.922	1.984
51	2.652	3.971	2.014
52	2.688	4.014	2.04
53	2.722	4.054	2.067
54	2.757	4.094	2.094
55	2.789	4.127	2.118
56	2.817	4.161	2.141
57	2.846	4.193	2.163
58	2.874	4.223	2.186
59	2.898	4.253	2.206
60	2.923	4.279	2.225
61	2.947	4.303	2.245
62	2.969	4.328	2.264
63	2.989	4.352	2.281
64	3.01	4.376	2.298
65	3.03	4.401	2.315
66	3.049	-0.29	2.331
67	3.068	-0.271	2.346
68	0.231	-0.249	0.802
69	0.277	-0.227	0.865
70	0.323	-0.205	0.929
71	0.369	-0.182	0.991
72	0.415	-0.16	1.054
73	0.461	-0.131	1.116
74	0.525	-0.076	1.178
75	0.603	-0.022	1.241
76	0.68	0.033	1.306
77	0.757	0.087	1.37
78	0.834	0.144	1.434
79	0.91	0.195	1.498
80	0.986	0.249	1.561
81	1.061	0.303	1.624
82	1.136	0.363	1.686
83	1.213	0.453	1.748
84	1.291	0.543	1.813

85	1.369	0.633	1.88
86	1.447	0.722	1.947
87	1.524	0.81	2.013
88	1.6	0.899	2.079
89	1.676	0.987	2.145
90	1.752	1.08	2.21
91	1.834	1.172	2.275
92	1.916	1.264	2.339
93	1.997	1.355	2.408
94	2.078	1.445	2.483
95	2.158	1.537	2.558
96	2.238	1.635	2.632
97	2.317	1.732	2.706
98	2.403	1.829	2.779
99	2.496	1.925	2.851

* T=0 is entry into eclipse
Dissipations are for one cell

Table 2.5 : Transient BPC Power Dissipations *

Time* (min)	BPC Channel A: Science-min 3 channels oper 2330W load	BPC Channel B: Science-max 4 channels oper 2530W load	BPC Channel C: L/A &Surv 3 channels oper 1740W load
1	26.85	23.57	19.31
2	27.03	23.73	19.37
3	27.21	23.9	19.42
4	27.35	24.02	19.47
5	27.49	24.15	19.51
6	27.63	24.28	19.55
7	27.74	24.35	19.59
8	27.83	24.44	19.63
9	27.91	24.51	19.66
10	27.99	24.56	19.69
11	28.04	24.61	19.71
12	28.1	24.66	19.74
13	28.15	24.69	19.76
14	28.19	24.73	19.78
15	28.23	24.76	19.79
16	28.26	24.79	19.81
17	28.3	24.82	19.82
18	28.33	24.84	19.84
19	28.36	24.87	19.85
20	28.39	24.89	19.86
21	28.41	24.91	19.87
22	28.44	24.93	19.88
23	28.46	24.95	19.89
24	28.48	24.97	19.9
25	28.5	24.98	19.1
26	28.52	25	19.2
27	28.54	25.01	19.3
28	28.56	25.03	19.4
29	28.58	25.04	19.5
30	28.6	25.05	19.6
31	28.61	25.06	19.6
32	28.63	25.08	19.97
33	28.64	25.09	19.98
34	19.96	18.06	19.99
35	20.13	18.11	19.99
36	20.13	18.11	20
37	20.13	18.11	20.01
38	20.13	18.1	20.01
39	20.13	18.1	20.02
40	20.13	18.1	20.02

41	20.13	18.09	20.03
42	20.13	18.09	20.04
43	20.13	18.09	20.04
44	20.13	18.08	20.05
45	20.13	18.08	20.05
46	20.13	18.08	20.06
47	20.13	18.08	20.06
48	20.12	18.07	20.07
49	20.12	18.07	20.07
50	20.12	18.07	20.08
51	20.12	18.06	20.09
52	20.12	18.06	20.09
53	20.12	18.06	20.1
54	20.12	18.05	20.1
55	20.12	18.05	20.11
56	20.12	18.05	20.11
57	20.12	18.05	20.12
58	20.12	18.04	20.13
59	20.12	18.04	20.13
60	20.12	18.04	20.14
61	20.12	18.03	20.14
62	20.12	18.03	20.15
63	20.12	18.03	20.16
64	20.12	18.03	20.16
65	20.12	18.02	20.17
66	20.12	18.02	20.17
67	20.12	18.02	20.18
68	20.12	18.02	20.18
69	20.12	18.01	20.19
70	20.12	18.01	20.2
71	20.12	18.01	20.2
72	20.12	18	20.21
73	20.12	18	20.22
74	20.12	18	20.22
75	20.12	18	20.23
76	20.12	17.99	20.23
77	20.12	17.99	20.24
78	20.12	17.98	20.25
79	20.12	17.98	20.25
80	20.12	17.97	20.26
81	20.12	17.97	20.27
82	20.12	17.97	20.27
83	20.12	17.96	20.28
84	20.11	17.95	20.28
85	20.11	17.95	20.29
86	20.11	17.94	20.29
87	20.11	17.94	20.3
88	20.11	17.93	20.31

89	20.11	17.93	20.31
90	19.53	17.92	20.32
91	18.93	17.92	20.32
92	18.35	17.92	20.33
93	17.77	17.91	20.34
94	10.76	10.64	20.34
95	10.76	10.64	20.35
96	10.76	10.64	20.35
97	10.76	10.64	20.36
98	10.76	10.64	20.36
99	10.76	10.64	20.37

* T=0 is entry into eclipse
Dissipations are for one channel

2.3 : Recorder EM

The Recorder EM mechanical layout is documented in Reference 18 and shown in Figure 2.10. Panel materials, stayout areas and overall structure and radiator dimensions are also shown in this figure. The baseline design incorporates CCHPs embedded in the (-Z) and (+Y) panels although their layouts have not yet been finalized. CCHPs are utilized to equalize the temperatures and heater power requirements between operating and cold standby components or between components that have variable power dissipations. The analysis of panels with embedded CCHPs is as described in Section 1.8.2.

Heater control and modelling is as described in Section 1.8.1. HCE2 designs are used to control all components requiring heater power. References shown in the tables described in this section are given in the List of References found at the beginning of this document.

Material and surface finish properties used in the analysis of this EM are given in Table 1.3. Surface finishes for each of the EM panels are listed below. EM analyses will validate that these finishes are appropriate and determine application areas for panels utilizing multiple finishes.

Zenith(-Z)	:	external:	silver teflon and MLI
	:	internal:	black paint
Base(+Z)	:	external:	black paint
	:	internal:	aluminized kapton
Sunside(-Y)	:	external:	MLI
	:	internal:	aluminized kapton
Space(+Y)	:	external:	silver teflon and MLI
	:	internal:	black paint
End(-X)	:	external:	aluminized kapton
	:	internal:	aluminized kapton
End(+X)	:	external:	aluminized kapton and MLI
	:	internal:	aluminized kapton
Bulkhead	:	both sides	aluminized kapton

Mechanical parameters, including component size, weight, accuracy class and mounting panel definition are shown in Table 2.6. Any exceptions to component surface finish, contact area or component to panel interface general guidelines described in Section 2.1 are also noted in this table.

Table 2.7 shows allowable component temperature ranges, as defined in Section 2.1, for components located in the Recorder EM. These temperatures are defined as the average component baseplate temperatures unless otherwise noted. Table 2.7 also identifies all known component temperature stability or gradient requirements. Blanks in the columns mean no stability or gradient requirements exist for that component.

Power dissipations for components that are constantly dissipating are shown in Table 2.8. Component transient dissipation profiles are given in Tables 2.9 . The values listed in these tables are estimates that must be increased to reflect the appropriate accuracy class contingencies as described in Section 1.6 before being used in any analysis. Exceptions to this include components with load related power dissipations such as the harness where the required

contingencies have already been applied to the loads used to calculate the component power dissipations.

Assumptions regarding TDRSS contacts were provided via Reference 20 so the profiles shown in Table 2.9 could be developed. These profiles impact only the KSA modulators because SSR dissipations are no longer impacted by TDRSS contacts or by the recording, storing or playback of Instrument data as the HRTRs were since it is assumed that memory is constantly powered on. Profile A shows the dissipation to be used with the Science-min analysis. This assumes that one of the 10 minute TDRSS contacts for this orbit is missed. Profile B assumes the nominal TDRSS contact sequence of 2, 10 minute contacts occurs. Profile C assumes an extended TDRSS contact of 20 minutes along with a 5 minute calibration contact occurs and should be used with the Science-max analysis cases.

Panel Materials

All panels (exceptions noted below)

H/C Core : 1.6 PCF Al 5056
Facesheets : Al 6061-T6 , 0.015" th
Panel Thickness : 1"
Bulkhead Thickness : 0.5"

(-Z) Radiator&(+Y) Radiator

H/C Core : 1.6 PCF Al 5052
Facesheets : Al 5005-H34 , 0.015" th
Panel Thickness : 1"

Kinematic Mnt Stayouts

2 places (+Y panel, lower corners); 3.5" x 3.5" each

MAGE Attach Pt. Stayouts

4 places (-Z panel, each corner); 2.5" x 2.5" each

Radiator Areas (overall)

-Z radiator : 70.65" x 52.5"
+Y radiator : 52.5" x 36.7"

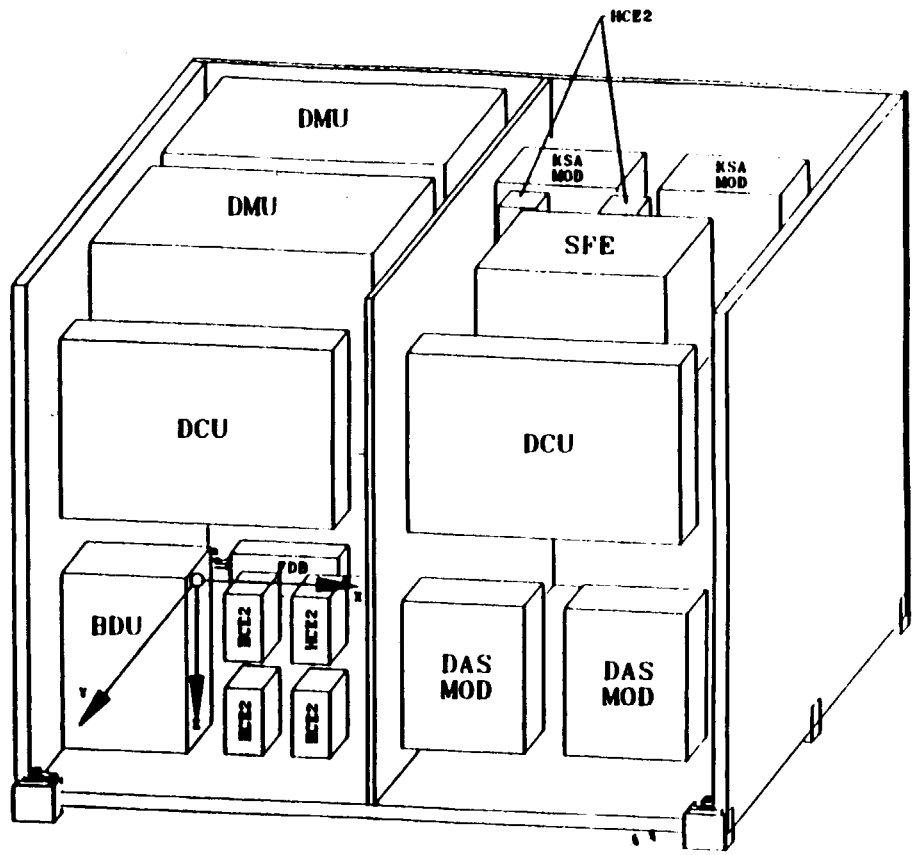

Figure 2.10 : Recorder EM Equipment Layout

Table 2.6 : Recorder EM Mechanical Parameters

Component	Quantity	Mnting Panel	Size LxWxH (inxinxin)	Unit Weight (lb)	Accur Class	Reference	Comments
SSR-DMU	2	-Z	20.8x23.5x15	210	4	17	
KSA	2	-Z	11x9x7.5	20.3	3	17	
SFE	1	-Z	14.5x12x7.7	40	4	17	
SSR-DCU	2	+Y	20x6.2x13.2	38.5	4	17	
DAS Modulator	2	+Y	11x9x7.5	20.3	3	17	
BDU	1	+Y	9.1x13.1x9.5	20.8	3	17	
FDB	1	+Z	8x4x3	1.7	3	17	
HCE2	6	-Z/+Y	2.8x5x6.8	0.6	3	17	
EM Structure	1	NA	52.5X70.7X39.7	86	3	17	
EM Mounts	6	NA	TBD	2.5	3	17	
Pwr/C&DH Harness	1	NA	NA	62.4	3	17	

Table 2.7: Recorder EM Component Temperature Requirements

Component	Measurement Location	Design Range* (C)	NonOp Range* (C)	Stability[1]	Comments[1]	Reference
SSR-DMU	baseplate	-10/50	-25/60		[2]	17,16
SSR-DCU	baseplate	-10/50	-25/60		[2]	17,16
DAS Modulator	baseplate	-10/50	-25/60		[2]	17,16
SFE	baseplate	-10/50	-25/60		[2]	17,16
KSA	baseplate	-10/50	-25/60		[2]	17,16
BDU	baseplate	-10/50	-25/60			17
FDB	baseplate	-10/50	-25/60			17
HCE2	baseplate	-24/61	-34/71			17
EM Structure	TBD	-50/80	NA			17
EM Mounts	TBD	-20/60	-30/70			17
Harness	NA	-5/50	-25/60			17

* Operating & Nonoperating Acceptance Temp. Range (+/-5 C) outside Design Ranges
  Operating & Nonoperating Qual Temp. Range (+/-10 C) outside Design Ranges

[1] Unless otherwise noted, comp operates in all S/C modes/phases & has no stability/gradient req't defined

[2] Held at -20C when component is not operating, Prim/back-up HCE set pt above cold start temp

Table 2.8 : Recorder EM Power Dissipations *

Component	L/A-SA Fail (W)	L/A-SunPtSafe (W)	Science-Max (W)	Science-Min (W)	OO-SunPtSafe (W)	OnOrbit-Surv (W)	Reference
SSR-DCU1	38.2	38.2	38.2	38.2	38.2	38.2	17,4
SSR-DCU2	6.8	6.8	6.8	6.8	6.8	6.8	17,4
SFE	0	0	80	80	0	0	17,4
KSA1	0	0	Tbl 2.9	Tbl 2.9	0	0	17,4,20
KSA2	0	0	0	0	0	0	17,4
Harness	0.5	0.5	0.5	0.5	0.5	0.5	17,4
SSR-DMU1	0	0	50	50	0	0	17,4
SSR-DMU2	0	0	50	50	0	0	17,4
DAS Modul1	0	0	49.2	49.2	0	0	17,4
DAS Modul2	0	0	0	0	0	0	17,4
BDU	8.5	8.5	8.5	8.5	8.5	8.5	17,4
FDB	1	1	1	1	1	1	17,4
HCE2	0.5 each	0.5 each	0.5 each	0.5 each	0.5 each	0.5 each	17,4

* accuracy class contingency must be added to dissipations, except harness, before using values in analyses.

Table 2.9 : Recorder EM Transient Power Dissipations

Time * (min)	Science - min KSA1 Dissip (W)	Science - max KSA1 Dissip (W)
0 to 10	48.5	48.5
11 to 25	8.5	48.5
26 to 100	8.5	8.5

* Time=0 corresponds to solar noon

** 20% contingency must be added to dissipations before using values in analyses

2.4 : GN&C Sensor EM

The GN&C EM mechanical layout is documented in reference 18 and shown in Figure 2.11. Panel materials, stayout areas and overall structure and radiator dimensions are also shown in this figure. Heater control and modelling is as described in Section 1.8.1. HCE2 designs are used to control all components requiring heater power. References shown in the tables described in this section are given in the beginning of this document.

Material and surface finish properties used in the analysis of this EM are given in Table 1.3. Surface finishes for each of the EM panels are listed below. EM analyses will validate that these finishes are appropriate and determine application areas for panels utilizing multiple finishes.

Zenith(-Z)	:	external:	silver teflon and MLI
	:	internal:	black paint
Base(+Z)	:	external:	black paint
	:	internal:	aluminized kapton
Sunside(-Y)	:	external:	MLI
	:	internal:	aluminized kapton
Space(+Y)	:	external:	silver teflon and MLI
	:	internal:	black paint
End(-X)	:	external:	aluminized kapton
	:	internal:	aluminized kapton
End(+X)	:	external:	MLI and aluminized kapton
	:	internal:	aluminized kapton

Mechanical parameters, including component size, weight, accuracy class and mounting panel definition are shown in Table 2.10. Any exceptions to component surface finish, contact area or component to panel interface general guidelines described in Section 2.1 are also noted in this table.

Table 2.11 shows allowable component temperature ranges, as defined in Section 2.1, for components located in the Sensor EM. These temperatures are defined as the average component baseplate temperatures unless otherwise noted. Table 2.11 also identifies all known component temperature stability or gradient requirements. Blanks in the columns mean no stability or gradient requirements exist for that component.

The Star Tracker mounting bracket design, based on the requirements of the Ball Star Tracker, is shown in Figure 2.12. A dry conductive coupling is used between the Star Trackers and the bracket as required by the Ball proposal. A dry conductive coupling is also initially assumed between the bracket and the optical bench. This was done to minimize the heat transferred into the optical bench thereby reducing thermal distortion. The bracket and star tracker body are assumed to be painted black.

Power dissipations for components that are constantly dissipating are shown in Table 2.12. The values listed in this table are estimates that must be increased to reflect the appropriate accuracy class contingencies as described in Section 1.6 before being used in any analysis. Exceptions to this include components with load related power dissipations such as the harness where the required contingencies have already been applied to the loads used to calculate the component power dissipations.

Panel Materials

<u>All panels (exceptions noted below)</u>
H/C Core : 1.6 PCF Al 5056
Facesheets : Al 6061-T6 , 0.015" th
(+/- X) Panel Thickness : 1"
(-Y) Panel Thickness : 1.5"

<u>(-Z) & (+Y) Radiators</u>
H/C Core : 1.6 PCF Al 5052
Facesheets : Al 5005-H34 , 0.015" th
(-Z) Panel Thickness : 1"
(+Y) Panel Thickness : 1.5"

<u>Optical Bench (+Z)</u>
H/C Core : 1.6 PCF Al 5052
Facesheets : UHMS Gr/Ep (quasi-isotropic layup) , 0.030" th
Panel Thickness : 1.25"

Kinematic Mnt Stayouts
3 places (+Y panel, lower corners & midside)
3.5" x 3.5" each

MAGE Attach Pt. Stayouts
4 places (-Z panel, each corner); 2.5" x 2.5" each

Radiator Areas (overall)
-Z radiator : 66" x 30"
+Y radiator : 66" x 27.5", less lightshade cutouts

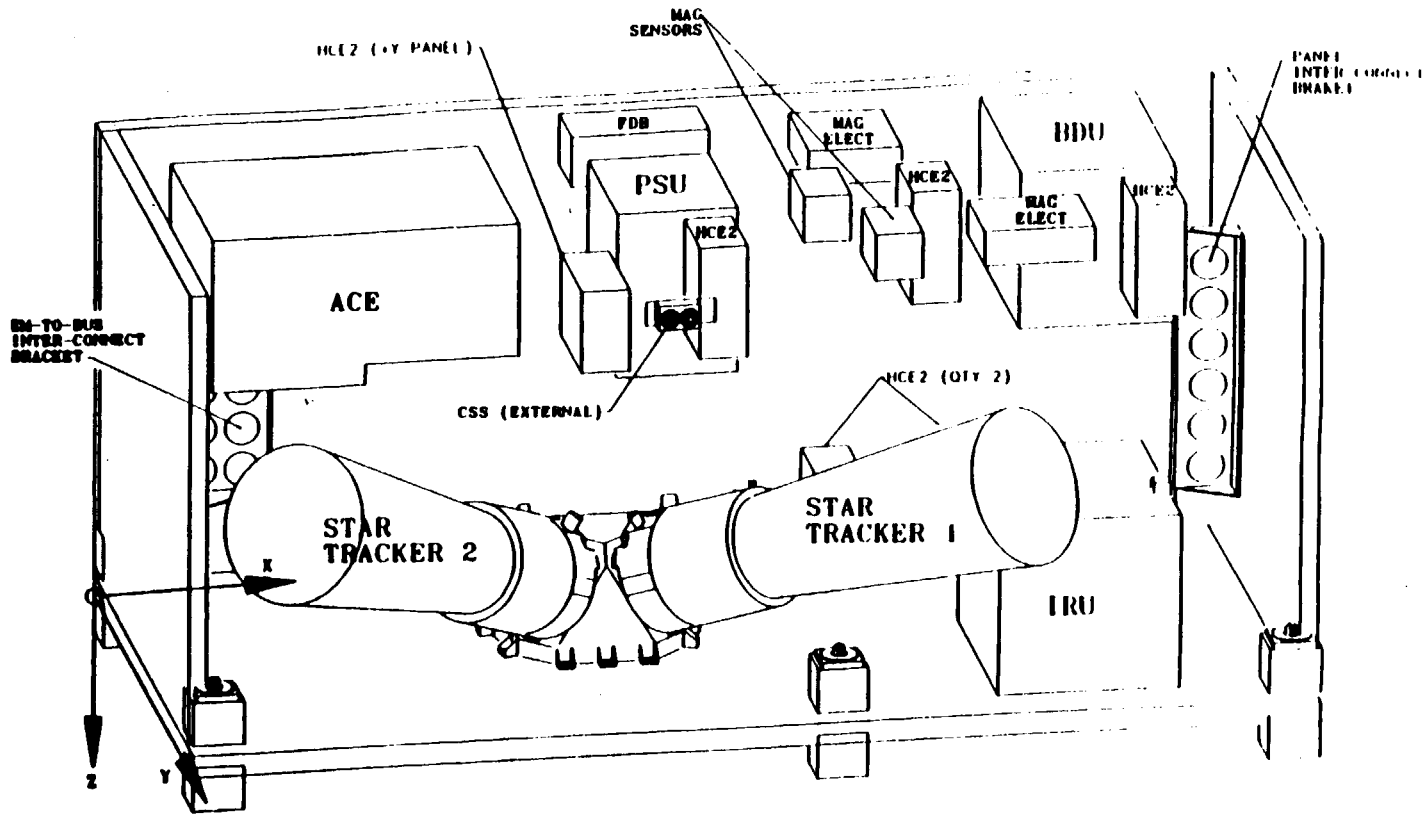

Figure 2.11 : GN&C Sensor EM Equipment Layout

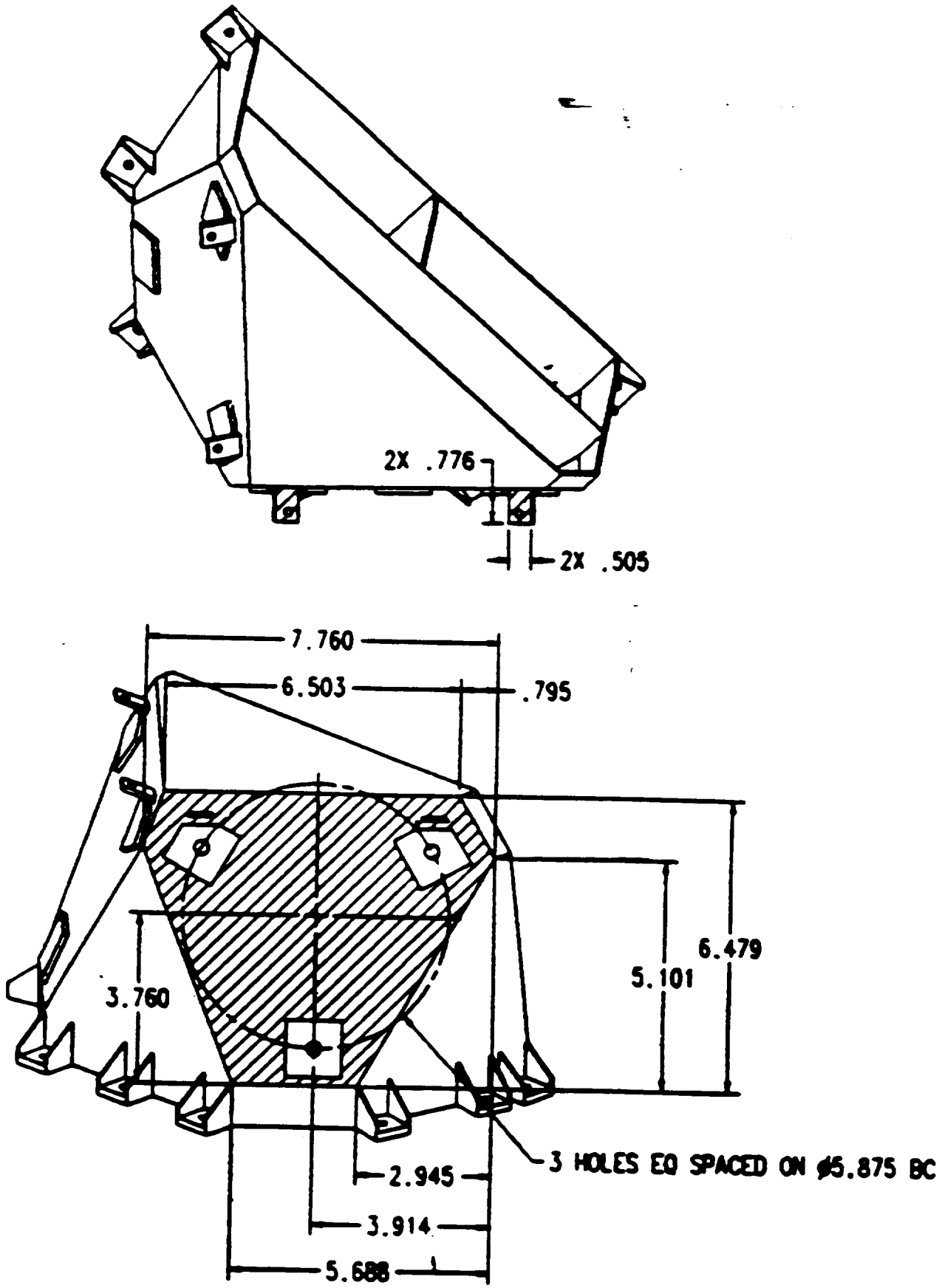

Figure 2.12 : Star Tracker Mounting Bracket

Table 2.10 : GN&C Sensor EM Mechanical Parameters

Component	Quantity	Mnting Panel	Size LxWxH (inxinxin)	Unit Weight (lb)	Accur Class	Reference	Comments
ACE	1	-Z	13.5x18x9	46.5	2	17	
MAGe	2	-Z	5.6x6.5x2.1	1.6	2	17	
MAGs	2	-Z	4.7x2.8x2.8	1	2	17	
PSU	1	-Z	7X9.5X10	12	4	17	
FDB	1	-Z	8X4X3	1.7	3	17	
BDU	1	-Z	9.1X13.1X9.5	20.8	3	17	
IRU	1	+Z	13.2x10.7x10.5	37.5	2	17,23	mnt rim I/F* exceeds heat flux req't
Star Tracker	2	+Z	8x8x28	21.3	3	17,24	3-pt mnt to bracket exceeds heat flux req't
ST Mnt Bracket	1	+Z	Fig 2.11	5	3	17	
HCE2	6	+/-Z	2.8X5X6.8	0.6	3	17	
CSS-BodyMnt	1	+Yext	4x1.5x1.5	0.3	2	17	
EM Structure	1	NA	66X32X30	60.5	3	17	
EM Mounts-a	6	NA	TBD	2.5	3	17	
EM Mounts-b	6	NA	TBD	1.5	3	17	
Pwr/C&DH Harness	1	NA	NA	33.7	3	17	

* Radiative coupling based on bare aluminum (e=0.5) facing optical bench in addition to 'dry' joint conductive coupling along rim

Table 2.11 : GN&C Sensor EM Component Temperature Requirements

Component	Measurement Location	Design Range* (C)	NonOp Range* (C)	Stability[1]	Comments[1]	Reference
ACE	baseplate	-10/50	-25/60			17
MAGe	baseplate	-10/50	-25/60		[2]	17,16
MAGs	baseplate	-10/50	-25/60		[2]	17,16
PSU	baseplate	-10/50	-25/60			17
FDB	baseplate	-10/50	-25/60			17
IRU	mnting rim	10/40	-25/60	1 C/hr		17,27
Star Tracker	mnting pts(3)	-10/40	-25/60		[2]	17,16
BDU	baseplate	-10/50	-25/60			17
HCEs	baseplate	-24/61	-34/71			17
EM Structure	TBD	-50/80	NA	[3]		17
EM Mounts	TBD	-20/60	-30/70			17
Harness	NA	-5/50	-25/60			17
ST Mnt Bracket	TBD	-25/60	NA	[3]		17

* Operating & Nonoperating Acceptance Temp. Range (+/-5 C) outside Design Ranges
Operating & Nonoperating Qual Temp. Range (+/-10 C) outside Design Ranges

[1] Unless otherwise noted, box operates in all S/C modes/phases & has no stability/gtadient req't defined

[2] MAG held at -10C when not operating
Star Tracker held at -20C when not operating; prim/backup HCE ste pt above cold start limit

[3] Distortion	Optical Bench	static	5 arcsec/axis	Ref 27
		dynamic	1.3 arcsec/axis	Ref 27
	ST Brackets	static	5 arcsec/axis	Ref 27
		dynamic	0.5 arcsec/axis	Ref 27
	Coplanarity between STs	none		Ref 27

54

Table 2.12 : Sensor EM Power Dissipations *

Component	L/A-SA Fail (W)	L/A-SunPtSafe (W)	Science-Max (W)	Science-Min (W)	OO-SunPtSafe (W)	OnOrbit-Surv (W)	Reference
ACE	41	41	46	41	41	41	17,4
MAGe1	1.2	1.2	1.2	1.2	1.2	1.2	17,4
MAGs1	0	0	0	0	0	0	17,4
MAGe2	0	0	0	0	0	0	17,4
MAGs2	0	0	0	0	0	0	17,4
BDU	8.5	8.5	8.5	8.5	8.5	8.5	17,4
Harness	0.6	0.6	0.6	0.6	0.6	0.6	17,4
PSU	10.5	10.5	12.9	10.5	10.5	10.5	17,4
FDB	1	1	1	1	1	1	17,4
HCE2	0.5 each	0.5 each	0.5 each	0.5 each	0.5 each	0.5 each	17,4
IRU	26	26	26	26	26	26	17,4
StarTrack1	0	0	12	12	0	0	17,4
StarTrack2	0	0	12	12	0	0	17,4
CSS-BdyMt	0	0	0	0	0	0	2.3.1

* accuracy class contingency must be added to dissipations, except harness, before using values in analyses.

2.5 : Communication/C&DH EM

The Comm/C&DH EM mechanical layout is documented in reference 18 and shown in Figure 2.13. Panel materials, stayout areas and overall structure and radiator dimensions are also shown in this figure. Heater control and modelling is as described in Section 1.8.1. HCE2 designs are used to control all components requiring heater power. References shown in the tables described in this section are given in the beginning of this document.

Material and surface finish properties used in the analysis of this EM are given in Table 1.3. Surface finishes for each of the EM panels are listed below. EM analyses will validate that these finishes are appropriate and determine application areas for panels utilizing multiple finishes.

Zenith(-Z)	:	external:	silver teflon and MLI
	:	internal:	black paint
Base(+Z)	:	external:	black paint
	:	internal:	aluminized kapton
Sunside(-Y)	:	external:	MLI
	:	internal:	aluminized kapton
Space(+Y)	:	external:	silver teflon and MLI
	:	internal:	black paint
End(-X)	:	external:	MLI
	:	internal:	aluminized kapton
End(+X)	:	external:	aluminized kapton
	:	internal:	aluminized kapton

Mechanical parameters, including component size, weight, accuracy class and mounting panel definition are shown in Table 2.13. Any exceptions to component surface finish, contact area or component to panel interface generalities described in Section 2.1 are also noted in this table.

Table 2.14 shows allowable component temperature ranges, as defined in Section 2.1, for components located in the Comm/C&DH EM. These temperatures are defined as the average component baseplate temperatures unless otherwise noted. Table 2.14 also identifies all known component temperature stability or gradient requirements. Blanks in the columns mean no stability or gradient requirements exist for that component.

Power dissipations for components that are constantly dissipating are shown in Table 2.15. Component transient dissipation profiles are given in Tables 2.16. Assumptions regarding TDRSS contacts were provided via Reference 20 so SBT and BRF profiles shown in Table 2.16 could be developed. Science-min profiles assume one of the 10 minute TDRSS contacts is missed. Science-max assumes an extended 20 minute TDRSS contact with a 5 minute calibration contact. The case where both SBTs and BRFs transmit continuously is evaluated to determine its impact on component temperatures since this issue was raised at S/S PDRs and Reference 21 states it could occur. It will not be used as a design case. Table 2.16 also shows the ADE L/A power profile. The values listed in these tables are estimates that must be increased to reflect the appropriate accuracy class contingencies as described in Section 1.6 before being used in any analysis. Exceptions to this include components with load related power dissipations such as the harness where the required contingencies have already been applied to the loads used to calculate the component power dissipations.

Panel Materials

<u>All panels (exceptions noted below)</u>
H/C Core : 1.6 PCF Al 5056
Facesheets : Al 6061-T6 , 0.015" th
Panel Thickness : 1"

<u>(-Z) & (+Y) Radiators</u>
H/C Core : 1.6 PCF Al 5052
Facesheets : Al 5005-H34 , 0.015" th
Panel Thickness : 1"

Kinematic Mnt Stayouts
2 places (+Y panel, lower corners); 3.5" x 3.5" each

MAGE Attach Pt. Stayouts
4 places (-Z panel, each corner); 2.5" x 2.5" each

Radiator Areas (overall)
-Z radiator : 53.5" x 32"
+Y radiator : 53.5" x 26"

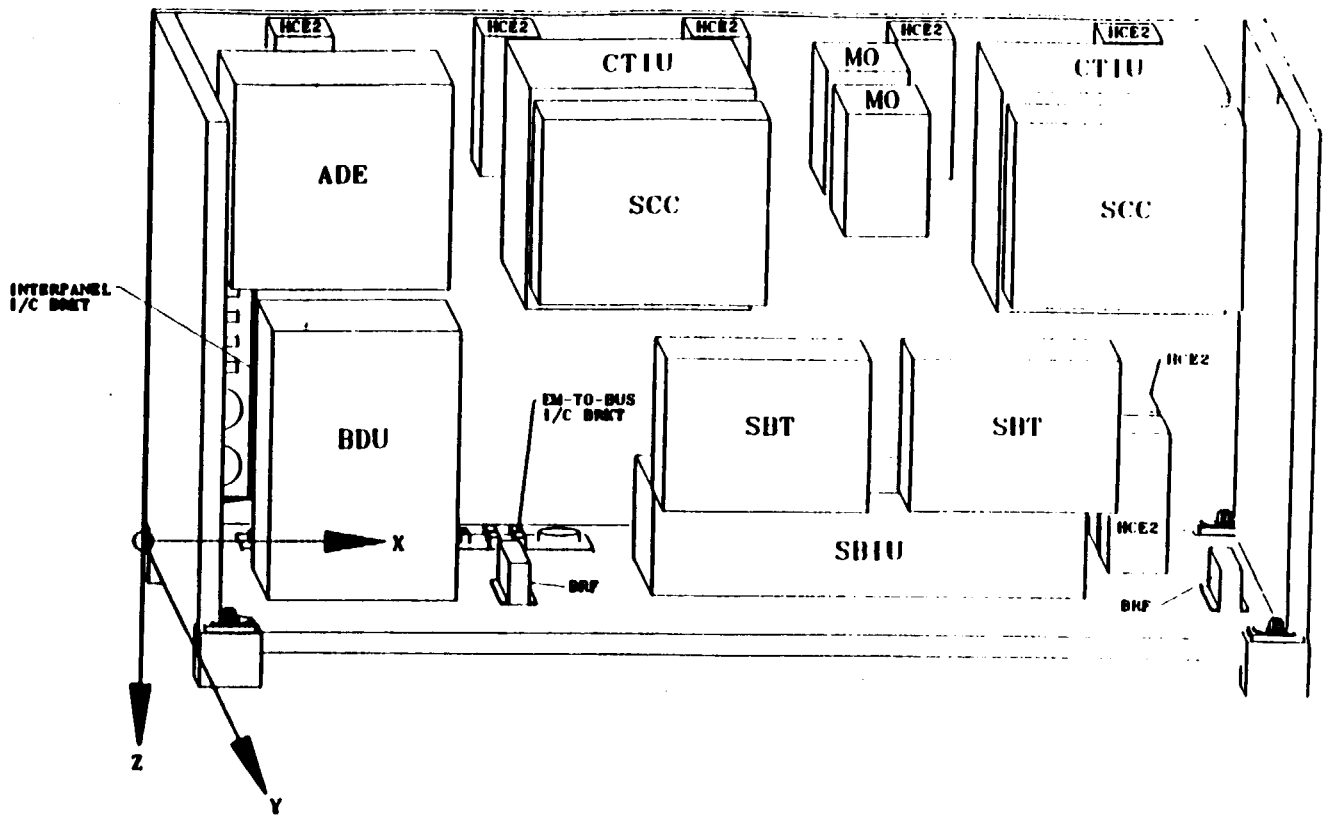

Figure 2.13 : Comm/C&DH EM Equipment Layout

Table 2.13 : COMM/C&DH EM Mechanical Parameters

Component	Quantity	Mnting Panel	Size LxWxH (inxinxin)	Unit Weight (lb)	Accur Class	Reference	Comments
CTIU	2	-Z	10.8X13.8X10.8	25.9	3	17	
SCC	2	-Z	5X10.9X9.1	12.7	3	17	
MO	2	-Z	4X8X6	2	3	17	
ADE	1	-Z	10.5X9.5X10	13.4	3	17	
SBT	2	+Y	11x6x5	15.3	3	17	
BDU	1	+Y	9.1X13.1X9.5	20.8	3	17	
BRF	2	+Z	6x1.8x2	0.7	1	17	
SBIU	1	+Z	21X10.1X5	11.8	2	17	
FDB	1	+Z	8x4x3	1.7	3	17	
HCE2	9	+/-Z	2.8X5X6.8	0.6	3	17	
EM Structure	1	NA	53.5X32X27	41	3	17	
EM Mounts	4	NA	TBD	2.5	3	17	
Pwr/C&DH Harness	1	NA	NA	42.7	3	17	

Table 2.14: COMM/C&DH EM Component Temperature Requirements

Component	Measurement Location	Design Range* (C)	NonOp Range* (C)	Stability[1]	Comments[1]	Reference
CTIU	baseplate	-10/50	-25/60			17
SCC	baseplate	-10/50	-25/60		[2]	17,16
MD	baseplate	-10/50	-25/60	10 C/hr		17
ADE	baseplate	-10/50	-25/60			17
SBT	baseplate	-10/50	-25/60			17
BRF	baseplate	-10/50	-25/60		[2]	17,16
BDU	baseplate	-10/50	-25/60			17
SBIU	baseplate	-10/50	-25/60			17
FDB	baseplate	-10/50	-25/60			17
HCE2	baseplate	-24/61	-34/71			17
EM Structure	TBD	-50/80	NA			17
EM Mounts	TBD	-20/60	-30/70			17
Harness	NA	-5/50	-25/60			17

* Operating & Nonoperating Acceptance Temp. Range (+/-5 C) outside Design Ranges
Operating & Nonoperating Qual Temp. Range (+/-10 C) outside Design Ranges
[1] Unless otherwise noted, box operates in all S/C modes/phases & has no stability/gradient req't defined
[2] Held at -10C when component is not operating

Table 2.15: Comm/C&DH EM Power Dissipations *

Component	L/A-SA Fail (W)	L/A-SunPtSafe (W)	Science-Max (W)	Science-Min (W)	OO-SunPtSafe (W)	OnOrbit-Surv (W)	Reference
CTIU1	31.2	31.2	31.2	31.2	31.2	31.2	17,4
CTIU2	25.4	25.4	25.4	25.4	25.4	25.4	17,4
SCC1	7	7	17	7	7	7	17,4,29
SCC2	0	0	0	0	0	0	17,4
MO1	8	8	8	8	8	8	17,4
MO2	8	8	8	8	8	8	17,4
ADE	Tbl 2.16	Tbl 2.16	5.5	5.5	0	0	17,4
SBT1	45	45	Tbl 2.16	Tbl 2.16	45	45	17,4
SBT2	15	15	15	15	15	15	17,4
BDU	8.5	8.5	8.5	8.5	8.5	8.5	17,4
SBIU	1	1	1	1	1	1	17,4
FDB	1	1	1	1	1	1	17,4
HCE2	0.5 each	0.5 each	0.5 each	0.5 each	0.5 each	0.5 each	17,4
Harness	0.2	0.2	0.2	0.2	0.2	0.2	17,4
BRF1	0.4	0.4	Tbl 2.16	Tbl 2.16	0.4	0.4	17,4
BRF2	0	0	0	0	0	0	17,4

* accuracy class contingency must be added to dissipations, except harness, before using values in analyses.

Table 2.16 : COMM/C&DH EM Transient Power Dissipations

Time * (min)	Science - min SBT1 Dissip (W)	Science - min BRF1 Dissip (W)	Science - max SBT1 Dissip (W)	Science - max BRF1 Dissip (W)	Reference
0 to 10	45	0.4	45	0.4	17,20
11 to 25	15	0	45	0.4	
26 to 100	15	0	15	0	

For impact only : Apply to Science - max

	Time * (min)	Dissipation** (W)	Reference
SBT1	0 to 100	45	21
SBT2	0 to 100	45	
BRF1	0 to 100	0.4	
BRF2	0 to 100	0.4	

Launch/Ascent Mode : ADE

Time * (min)	ADE Dissip (W)
0 to 54	0
55 to OnOrbit	5.5
entry into Surv	return to 0
entry into Safe	return to 0

* Time=0 corresponds to solar noon or, for PreSA, T=0 is Go-To-Internal Pwr

** 20% contingency must be added to dissipations before using values in analyses

2.6 : DAS Panel

The DAS panel mechanical layout is documented in Reference 18 and shown in Figure 2.14. Panel materials, stayout areas and overall structure and radiator dimensions are also shown in this figure. The DAS panel utilizes embedded CCHPs to remove heat from the FETs located in the DAS power amplifier/transmitters (XMTRs). The actual CCHP design is on hold pending the finalization of the XMTR design concept. The EM models will represent straight CCHPs to show the effect CCHPs have on component temperatures and heater power requirements. The analysis of panels with embedded CCHPs is as described in Section 1.8.2.

Heater control and modelling is as described in Section 1.8.1. HCE2 designs are used to control all components requiring heater power. References shown in the tables described in this section are given in the beginning of this document.

Material and surface finish properties used in the analysis of this panel are given in Table 1.3. Surface finishes for the panel are listed below. Panel analyses will validate that these finishes are appropriate and determine application areas for the multiple finishes.

Space(+Y)	:	external:	silver teflon and MLI
	:	internal:	black paint

Mechanical parameters, including component size, weight, accuracy class and mounting panel definition are shown in Table 2.17. Any exceptions to component surface finish, contact area or component to panel interface general guidelines described in Section 2.1 are also noted in this table.

Table 2.18 shows allowable component temperature ranges, as defined in Section 2.1, for components located in the DAS panel. These temperatures are defined as the average component baseplate temperatures unless otherwise noted. Table 2.18 also identifies all known component temperature stability or gradient requirements. Blanks in the columns mean no stability or gradient requirements exist for that component.

Power dissipations for components that are constantly dissipating are shown in Table 2.19. The values listed in these tables are estimates that must be increased to reflect the appropriate accuracy class contingencies as described in Section 1.6 before being used in any analysis. Exceptions to this include components with load related power dissipations such as the harness where the required contingencies have already been applied to the loads used to calculate the component power dissipations.

Panel Materials
H/C Core : 1.6 PCF Al 5052
Facesheets : Al 5005-H34 , 0.015" th
Panel Thickness : 2"

Kinematic Mnt and MAGE Stayouts
5 places (corners & mid(-Z))
3" x 3" each

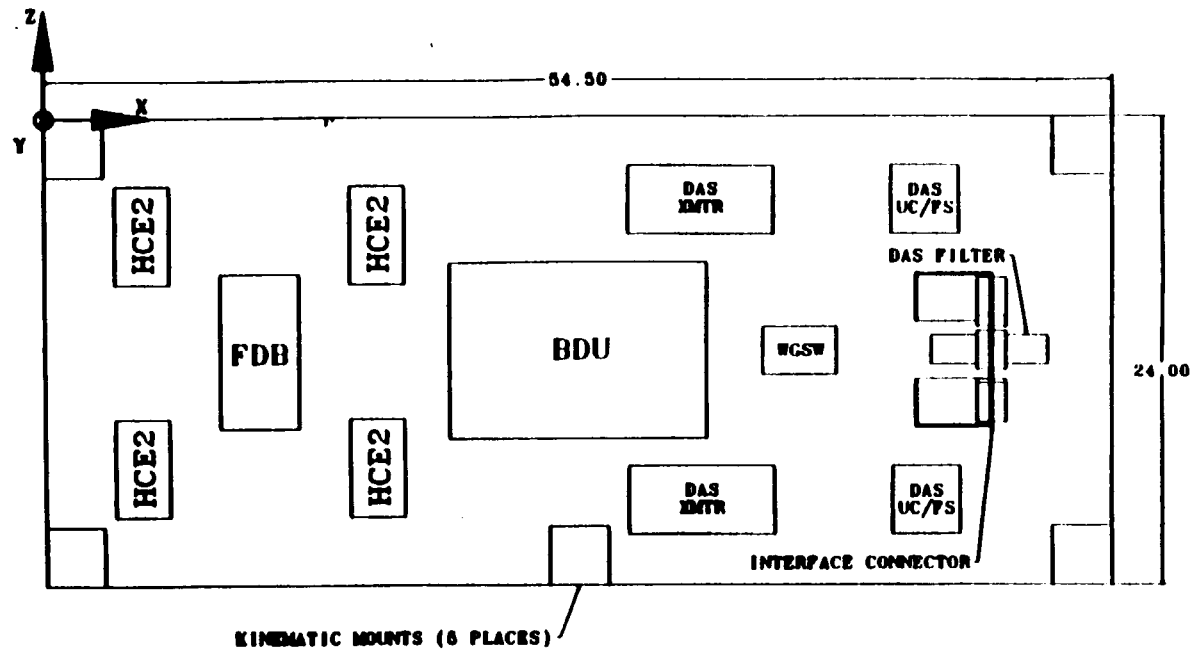

Figure 2.14 : DAS Panel Equipment Layout

Table 2.17 : DAS PANEL Mechanical Parameters

Component	Quantity	Mnting Panel	Size LxWxH (inxinxin)	Unit Weight (lb)	Accur Class	Reference	Comments
Upconverter	2	+Y	3.5x3.5x1.2	1	3	17	
PwrAmp/XMTR	2	+Y	7.5x3.5x2.1	2.3	3	17	exceeds heat flux req't
WG Switch	1	+Y	3.8x2.5x2.5	2	3	17	
Filter Assembly	1	+Y	6x1.5x0.7	1	3	17	
BDU	1	+Y	9.1X13.1X9.5	20.8	3	17	
FDB	1	+Y	8x4x3	1.7	3	17	
HCE2	4	+Y	2.8X5X6.8	0.6	3	17	
Panel Structure	1	NA	54.5X24X2	12	3	17	
Panel Mounts	5	NA	TBD	1	3	17	
Pwr/C&DH Harness	1	NA	NA	9.8	3	17	

Table 2.18: DAS PANEL Component Temperature Requirements

Component	Measurement Location	Design Range* (C)	NonOp Range* (C)	Stability[1]	Comments[1]	Reference
Upconverter	baseplate	-10/50	-25/60		[2]	17,16
Transmitter	baseplate	-10/50	-25/60		[2]	17,16
WG Switch	baseplate	-10/50	-25/60		[2]	17,16
Filter Assembly	baseplate	-10/50	-25/60		[2]	17,16
BDU	baseplate	-10/50	-25/60			17
FDB	baseplate	-10/50	-25/60			17
Panel Structure	TBD	-50/80	NA			17
Panel Mounts	TBD	-20/60	-30/70			17
Harness	NA	-5/50	-25/60			17
HCE2	baseplate	-24/61	-34/71			17

* Operating & Nonoperating Acceptance Temp. Range (+/-5 C) outside Design Ranges
  Operating & Nonoperating Qual Temp. Range (+/-10 C) outside Design Ranges

[1] Unless otherwise noted, box operates in all S/C modes/phases & has no stability/gradient req't defined

[2] Held at -20C when component is not operating

Table 2.19 : DAS Panel Power Dissipations *

Component	L/A-SA Fail (W)	L/A-SunPtSafe (W)	Science-Max (W)	Science-Min (W)	OO-SunPtSafe (W)	OnOrbit-Surv (W)	Reference
Upconv1	0	0	1	1	0	0	17,4
Upconv2	0	0	0	0	0	0	17,4
PwrAmp	0	0	57	57	0	0	17,4,30
PwrAmp	0	0	0	0	0	0	17,4
WG Switch	0	0	0	0	0	0	17,4
Filter Assy	0	0	1.5	1.5	0	0	17,4
BDU	8.5	8.5	8.5	8.5	8.5	8.5	17,4
FDB	1	1	1	1	1	1	17,4
Harness	0.1	0.1	0.1	0.1	0.1	0.1	17,4
HCE2	0.5 each	0.5 each	2 at 1.25 ea 2 at 0.5 ea	0.5 each	0.5 each	0.5 each	17,4

* accuracy class contingency must be added to dissipations, except harness, before using values in analyses.

2.7 : RWA EM

The RWA EM mechanical layout is documented in Reference 18 and shown in Figure 2.15. Panel materials, stayout areas and overall structure dimensions are also shown in this figure. The RWA mounting bracket designs are shown in Figure 16. A wet joint is assumed between the RWA and the bracket and a Chotherm gasket is used between the bracket and the mounting panel. Heater control and modelling is as described in Section 1.8.1. HCE2 designs are used to control all components requiring heater power. References shown in the tables described in this section are given in the beginning of this document.

Material and surface finish properties used in the analysis of this EM are given in Table 1.3. Surface finishes for each of the EM panels are listed below. EM analyses will validate that these finishes are appropriate and determine application areas for panels utilizing multiple finishes. Mechanical parameters, including component size, weight, accuracy class and mounting panel definition are shown in Table 2.20. Any exceptions to component surface finish, contact area or component to panel interface generalities described in Section 2.1 are also noted in this table.

Zenith(-Z)	:	external:	MLI
	:	internal:	aluminized kapton
Nadir(+Z)	:	external:	silver teflon and MLI
	:	internal:	black paint
Sunside(-Y)	:	external:	MLI
	:	internal:	black paint
Base(+Y)	:	external:	MLI
	:	internal:	aluminized kapton
End(-X)	:	external:	MLI
	:	internal:	black paint
End(+X)	:	external:	MLI
	:	internal:	aluminized kapton

Table 2.21 shows allowable component temperature ranges, as defined in Section 2.1, for components located in the RWA EM. These temperatures are defined as the average component baseplate temperatures unless otherwise noted. Table 2.21 also identifies all known component temperature stability or gradient requirements. Blanks in the columns mean no stability or gradient requirement exists for that component.

Power dissipations for components that are constantly dissipating are shown in Table 2.22. Component transient dissipation profiles are given in Tables 2.23. The values listed in these tables are estimates that must be increased to reflect the appropriate accuracy class contingencies as described in Section 1.6 before being used in any analysis. Exceptions to this include components with load related power dissipations such as the harness where the required contingencies have already been applied to the loads used to calculate the component power dissipations. The power dissipation currently baselined for the RWAs during the Science-max case of Table 2.22 is a constant 15W. It is possible that, in the event of an attitude failure, the RWAs may see the transient profile given in Table 2.23. This profile will therefore be evaluated so its impact on the RWA temperatures can be assessed but it will not be used as the basis of the design effort.

Panel Materials
All panels (exceptions noted below)
H/C Core : 1.6 PCF Al 5056
Facesheets : Al 6061-T6 , 0.015" th
Panel Thickness : 1"

(+Z) Radiator / (-Y)&(-X) Panels
H/C Core : 1.6 PCF Al 5052
Facesheets : Al 5005-H34 , 0.015" th
(+Z) Panel Thickness : 1.5"
(-Y/-X) Panel Thickness : 1"

Kinematic Mnt Stayouts
(+/-X), (+/-Z) 2 places each, all in corners adjacent to (+Y) panel
3.5" x 3.5" each

MAGE Attach Pt. Stayouts
4 places (-Y panel, each corner); 2.5" x 2.5" each

Radiator Areas (overall)
+Z radiator : 59" x 23"
-Y radiator : 59" x 28"
-X radiator : 26" x 23"

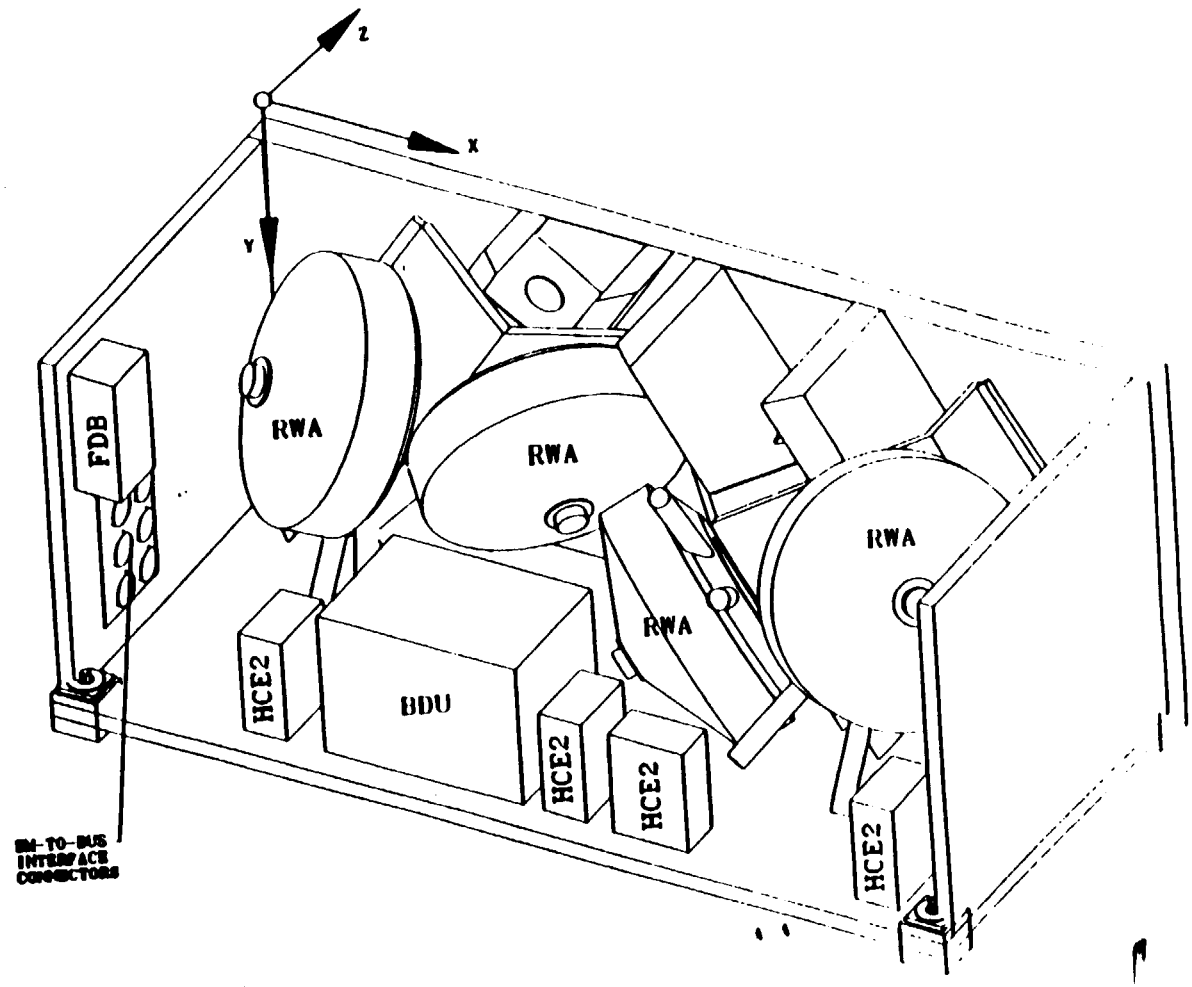

Figure 2.15 : RWA EM Equipment Layout

B : Tall Bracket

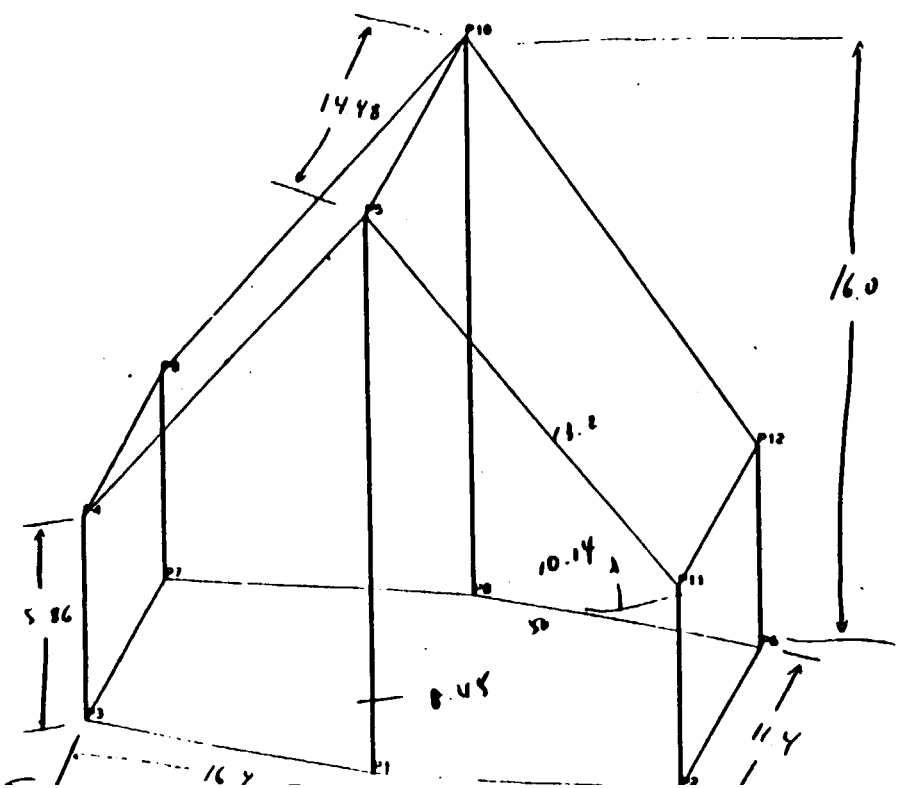

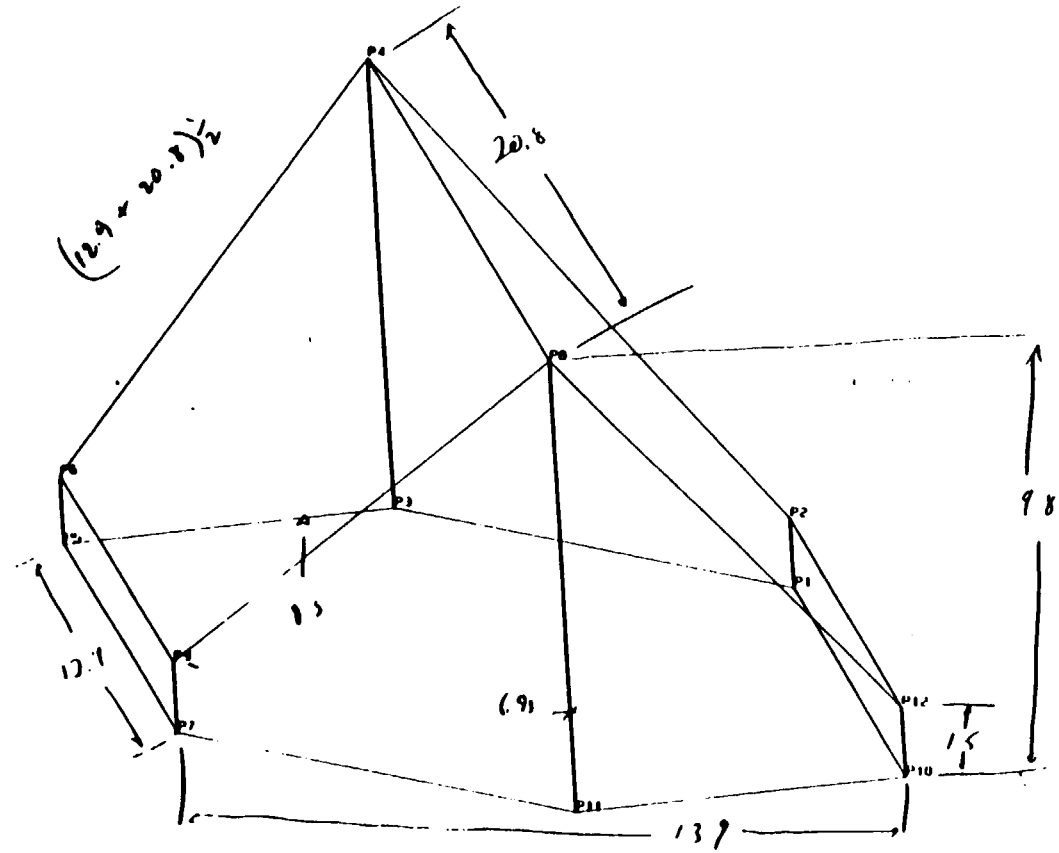

A : Short Bracket

Figure 2.16 : RWA Mounting Brackets

Table 2.20 : RWA EM Mechanical Parameters

Component	Quantity	Mnting Panel	Size LxWxH (inxinxin)	Unit Weight (lb)	Accur Class	Reference	Comments
RWA	4	+Z	8.5X18	31.6	2	17,25	mnt rim (40sqin)
BDU	1	+Y	9.1X13.1X9.5	20.8	3	17	
FDB	1	-X	8x4x3	1.7	3	17	
HCE2	4	+Y	2.8X5X6.8	0.6	3	17	
RWA Mnt Brackets	2	+Z	Fig 2.15	29.4	3	17	
EM Structure	1	NA	59X25X28	40	3	17	
EM Mounts	4	NA	TBD	2.5	3	17	
Pwr/C&DH Harness	1	NA	NA	41.7	3	17	

Table 2.21: RWA EM Component Temperature Requirements

Component	Measurement Location	Design Range* (C)	NonOp Range* (C)	Stability**	Comments**	Reference
RWA	mnting rim	-10/50	-25/60			17
BDU	baseplate	-10/50	-25/60			17
FDB	baseplate	-10/50	-25/60			17
EM Structure	TBD	-50/80	NA			17
EM Mounts	TBD	-20/60	-30/70			17
Harness	NA	-5/50	-25/60			17
RWA Mnt Bracket	TBD	-50/80	NA			17
HCE2	baseplate	-24/61	-34/71			17

* Operating & Nonoperating Acceptance Temp. Range (+/-5 C) outside Design Ranges
  Operating & Nonoperating Qual Temp. Range (+/-10 C) outside Design Ranges
** Unless otherwise noted, box operates in all S/C modes/phases & has no stability/gradient req't defined

Table 2.22 : RWA EM Power Dissipations *

Component	L/A-SA Fail (W)	L/A-SunPtSafe (W)	Science-Max (W)	Science-Min (W)	OO-SunPtSafe (W)[1]	OnOrbit-Surv (W)	Reference
RWA1	Tbl2.23	Tbl2.23	Tbl2.23	6	6 min/15 max	6	17,4,31
RWA2	Tbl2.23	Tbl2.23	Tbl2.23	6	6 min/15 max	6	17,4,31
RWA3	Tbl2.23	Tbl2.23	Tbl2.23	6	6 min/15 max	6	17,4,31
RWA4	Tbl2.23	Tbl2.23	Tbl2.23	6	6 min/15 max	6	17,4,31
BDU	8.5	8.5	8.5	8.5	8.5	8.5	17,4
FDB	1	1	1	1	1	1	17,4
HCE2	0.5 each	0.5 each	0.5 each	0.5 each	0.5 each	0.5 each	17,4
Harness	0.2	0.2	0.2	0.2	0.2	0.2	17,4

* accuracy class contingency must be added to dissipations, except harness, before using values in analyses.
[1] for hot case analysis use max.; for cold case analysis use min

Table 2.23 : RWA EM Transient Power Dissipations

A-Launch/Ascent Mode

Component	Time * (min)	Dissipation** (W)
RWA1-4	(G+0)to(G+25)	6
	(G+25)toOnOrbi	15

B-Full torque profile (use with Science-max; impact only)

(allow RWAs to come to dynamic steady state with 15W, then apply transient below)

Component	Time * (min)	Dissipation** (W)
RWA1-4	0 to 4.55	ramps:15to116
	4.55 to 100	28

* Time=0 corresponds to solar noon . G=Go-To-Internal power prior to Launch

** 20% contingency must be added to dissipations before using values in analyses

2.8 Propulsion Module

The Propulsion Module mechanical layout is shown in Figure 2.17. Panel materials, stayout areas and overall structure and radiator dimensions are also shown in this figure. Heater control and modelling is as described in Section 1.8.1. The HCE2B design is used to control all components requiring heater power. References shown in the tables described in this section are given in the List of References found at the beginning of this document.

The S/C level model includes representations for the hydrazine tank, internally mounted HCEs, BDU and PMEAs and externally mounted EPCs and FDBs. The external boxes are MLI covered, except for the EPC radiators which are covered with silver teflon. The detailed Proplulsion Module model includes representations for all components.

Material and surface finish properties used in the analysis of this module are given in Table 1.3. Surface finishes for the module are listed below. Propulsion Module analyses will validate that these finishes are appropriate and determine application areas for the multiple finishes.

Prop Base(-X)	:	external:	MLI
	:	internal:	black paint

Mechanical parameters, including component size, weight, and accuracy class are shown in Table 2.24. Any exceptions to component surface finish, contact area or component to panel interface general guidelines described in Section 2.1 are also noted in this table.

Table 2.25 shows allowable component temperature ranges, as defined in Section 2.1, for components located in the Propulsion Module. These temperatures are defined as the average component baseplate temperatures unless otherwise noted. Table 2.25 also identifies all known component temperature stability or gradient requirements. Blanks in the columns mean no stability or gradient requirements exist for that component.

Power dissipations for components that are constantly dissipating are shown in Table 2.26. Two values are shown for Science-max case. The lower power represents the normal quiescent dissipation while the higher power represents the dissipation during Delta-V maneuvers, as documented in Reference 38. The values listed in these tables are estimates that must be increased to reflect the appropriate accuracy class contingencies as described in Section 1.6 before being used in any analysis. Exceptions to this include components with load related power dissipations such as the harness where the required contingencies have already been applied to the loads used to calculate the component power dissipations.

ID	X DIM	Z DIM	LOC	COMPONENT	AGIT RADI
A	0.133	+10.555	MS	PMA 1	YES
B	+0.083	+10.701	MS	PMA 2	YES
C	-10.230	+2.200	MS	BBM	YES
D	-0.010	-2.000	FS	EPC 1	NO
E	-1.200	-2.000	FS	EPC 4	NO
F	+7.201	2.000	FS	EPC 2	NO
G	+4.004	+11.540	FS	EPC 3	NO
H	+17.630	-10.230	FS	FDB 3 (20V)	NO
J	+26.103	-5.220	FS	FDB 2 (20V)	NO
K	+5.083	+26.049	FS	FDB 1 (120V)	NO
L	-12.000	-15.000	MS	HCE 1	NO
M	-5.000	-17.762	MS	HCE 2	NO
N	+5.000	-17.762	MS	HCE 3	NO
P	+12.000	-15.000	MS	HCE 4	NO
R	-14.075	+23.456	MS	S/C HARNESS BRKT	NO

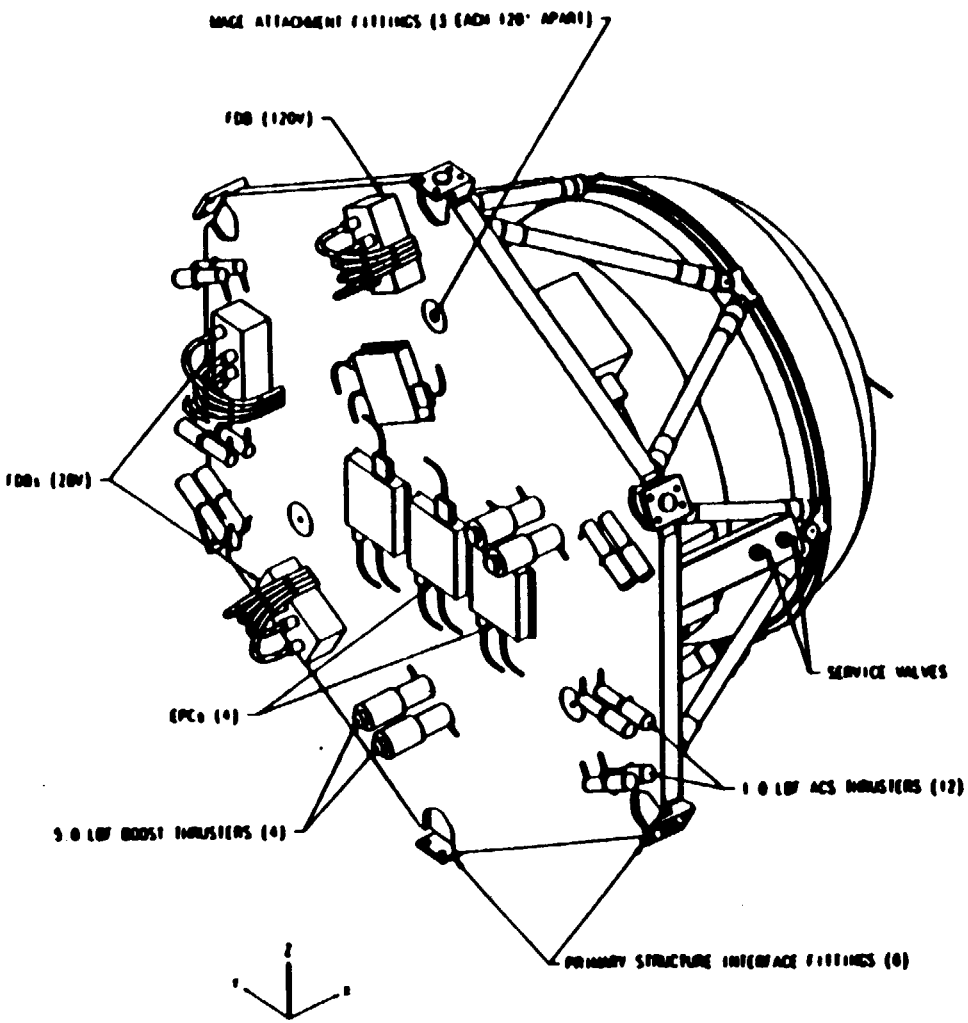

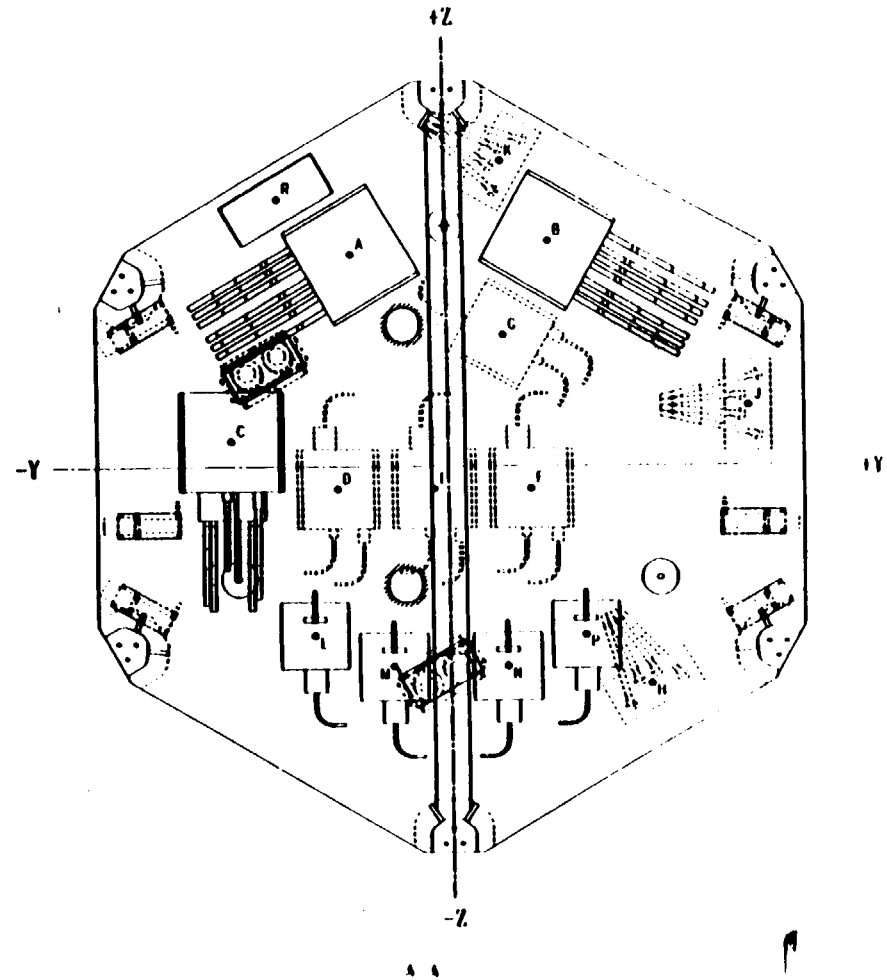

Figure 2.17 : Propulsion Module Layout

Table 2.24 : Propulsion Module Mechanical Parameters

Component	Quantity	Mnting Panel	Size LxWxH or ODxL (in)	Unit Weight (lb)	Accur Class	Reference	Comments
EPC	4	-X(ext)	7x7.3x1.5	2	3	17	MLI
FDB	3	-X(ext)	4x8x3	1.7	3	17	MLI
1 lbf REA	12						
Valve		-X(ext)	1.1x3.5	0.45	1	38	MLI
Engine		-X(ext)	1.4 maxx3.1	0.28	1	38	gold plated
5 lbf REA	4						
Valve		-X(ext)	1.5x0.9	0.4	1	38	MLI
Engine		-X(ext)	2.3x3.74	0.84	1	38	gold plated
PMEA	2	-X(int)	8.8x9.3x8.5	14.3	3	17	
BDU	1	-X(int)	9.5x9.1x10.3	17.8	3	17	
HCE2B	2	-X(int)	2.8x5x6.8	1.3	3	17	
Lines				3		17	
external	NA	-X(ext)	.25x35 ft		3	38	MLI
internal	NA	-X(int)	0.25x45 ft		3	38	Alum Kapton
Latch Valves	2	-X(int)	1.8x2.6x1.8	0.75	1	17,38	Alum Kapton
Service Valves	2	-X(int)	TBD	0.25	1	17,38	Alum Kapton
Press Xdcrs	1	-X(int)	1.25x3.7	0.6	1	17,38	
Filters	2	-X(int)	0.9x3.25	0.4	1	17,38	Alum Kapton
Tank	1	-X(int)	40.6x33.8	76	1	17,38	2 layer MLI
Harness	1	Both	NA	33	3	17,38	
-X panel	1	NA	62.15x61.4Hex	76.5	3	17,38	
Sup't Strut/fitting:	12	-X(int)	TBD	27.4	3	17,38	
Tank Sup't Ring	1	-X(int)	TBD	9.5	3	17,38	2 layer MLI

Table 2.25 : Propulsion Module Component Temperature Requirements

Component	Measurement Location	Design Range* (C)	NonOp Range* (C)	Stability**	Comments**	Reference
EPC	baseplate	-10/60	-25/70			17
FDB	baseplate	-10/60	-25/70			17
PMEA	baseplate	-10/50	-25/60			17
BDU	baseplate	-10/50	-25/60			17
HCE2B	baseplate	-24/61	-34/71			17
Tank	baseplate	12/40	TBD			17
Wet Components						
Latch Valve	TBD	12/40	TBD			17
Lines	TBD	12/40	TBD			17
Filters	TBD	12/40	TBD			17
Service Valve	TBD	12/40	TBD			17
Structure	TBD	NA	-60/80			17

* Operating & Nonoperating Acceptance Temp. Range (+/-5 C) outside Design Ranges
Operating & Nonoperating Qual Temp. Range (+/-10 C) outside Design Ranges
** Unless otherwise noted, box operates in all S/C modes/phases & has no stability/gradient req't defined

Table 2.26 : Propulsion Module Power Dissipations *

Component	L/A-SA Fail (W)	L/A-SunPtSafe (W)	Science-Max (W) **	Science-Min (W)	OO-SunPtSafe (W)[1]	OnOrbit-Surv (W)	Reference
EPC1A	0.4	13.2	2.1 / 25.3	0.4	13.2	0.4	38
EPC1B	5	7.3	7.4 / 26.6	5	7.3	5	
EPC2A	0	0	0 / 0	0	0	0	
EPC2B	2.3	8.6	2.3 / 8.6	2.3	8.6	2.3	
FDB1	0.3	0.6	0.5 / 1	0.3	0.6	0.3	38
FDB2	0.3	0.3	0.5 / 1	0.3	0.3	0.3	
FDB3	0.3	0.3	0.5 / 1	0.3	0.3	0.3	
PMEA1	0.96	10	3.2 / 5.9	0.96	10	0.96	38
PMEA2			0 / 0				
BDU	6.2	6.2	6.2	6.2	6.2	6.2	38
HCE4	2	2	2	2	2	2	38
Press Xdcr	0.5	0.5	0.5	0.5	0.5	0.5	38

* accuracy class contingency must be added to dissipations, except harness, before using values in analyses.
** lower value corresponds to quiescent mode; higher value corresponds to Delta-V mode

Table 2.27 : Distributed Housekeeping Equipment Temp & Size Requirements

Component	Size (L"xW"xH") (L"xOD")	Operating Design Temp (C)	Nonoperating Design Temp (C)	Reference
Primary Structure	Fig 2.18	-30/50	NA	17
Harnessing	NA	-5/50	-25/60	17
S-Band Omnis				
antennae	5x4.5	-85/120	-100/130	17
boom (zenith)	21x2	-60/70	NA	17
boom (nadir)	42x2	-60/70	NA	17
DAS Antennae	6.5x23	-85/90	-100/100	17
DAS boom	42x2	-60/70	NA	17
MTR	44x2.2	-10/50	-25/60	17
PRA	10x9x7	-5/50	-25/60	17
ESS	5x3.9	-10/35	-35/65	17
ESE	7X7.9X4.3	-10/50	-25/65	17
CSS (SA mounted)	4.1x4.1x2.5	-95/90	-110/100	17
CSS (Body mounted	4x1.5x1.5	-95/90	-110/100	17
FSSH	3.3x4.3x1.7	-10/50	-30/65	17
BDU (Instr)	9.5x9.1x10.3	-10/50	-25/60	17
FDB (Instr)	8x4x3	-10/50	-25/60	17
HCE	2.8x5x6.8	-24/61	-34/71	17
SAD		-24/61	-50/71	17
SSU	28.5x16.5x8	-15/55	-35/80	17
SA Elev Hinge		-60/70	NA	17
HGA boom		-60/70	NA	17
HGA Hinge/Damper		-10/55	-50/70	17

Table 2.28 : Distributed Housekeeping Equipment Dissipations

	L/A-SA Fail (W)	LA-SunPt Safe (W)	Science-max (W)	Science-min (W)	OO-SunPt Safe (W)	OO - Surv (W)	Comment
Primary Struct	0	0	0	0	0	0	
Harnessing	2	2	62	62	4	2	
S-Band Omnis							
zenith	1	1	1	1	1	1	
nadir	1	1	1	1	1	1	
DAS Antennae	0	0	0	0	0	0	
MTR (X,Y,Z)	1.6ea	1.6ea	1.6ea	1.6ea	1.6ea	1.6ea	
PRA	0	0	0	0	0	0	
ESS	3.1	3.1	3.1	3.1	3.1	3.1	
ESE	7.4	7.4	7.4	7.4	7.4	7.4	
CSS							
Body mount	0	0	0	0	0	0	
SA mount	0	0	0	0	0	0	
FSSH	0	0	0	0	0	0	
BDU	7.5	7.5	7.5	7.5	7.5	7.5	
FDB	1	1	1	1	1	1	
HCE2	0.5	0.5	0.5	0.5	0.5	0.5	
SAD							
SSU Eclipse	36.5	36.5	36.5	36.5	36.5	36.5	SA tracking
Shunt	NA	NA	88	88	88	88	begins shunt
DEU	10/0	10/15/0	0	0	0	0	10W GTIthru G+25
							15W G+25thru G+45
Mast Motor	0	0/55/0	0	0	0	0	55W G+25thru G+40
HGA Release Mec	0/250/0	0/250/0	0	0	0	0	250W G+115thruG+125
HGAA							
standby	13/50	13/50	136	136	136	136	
transmit			145	145			

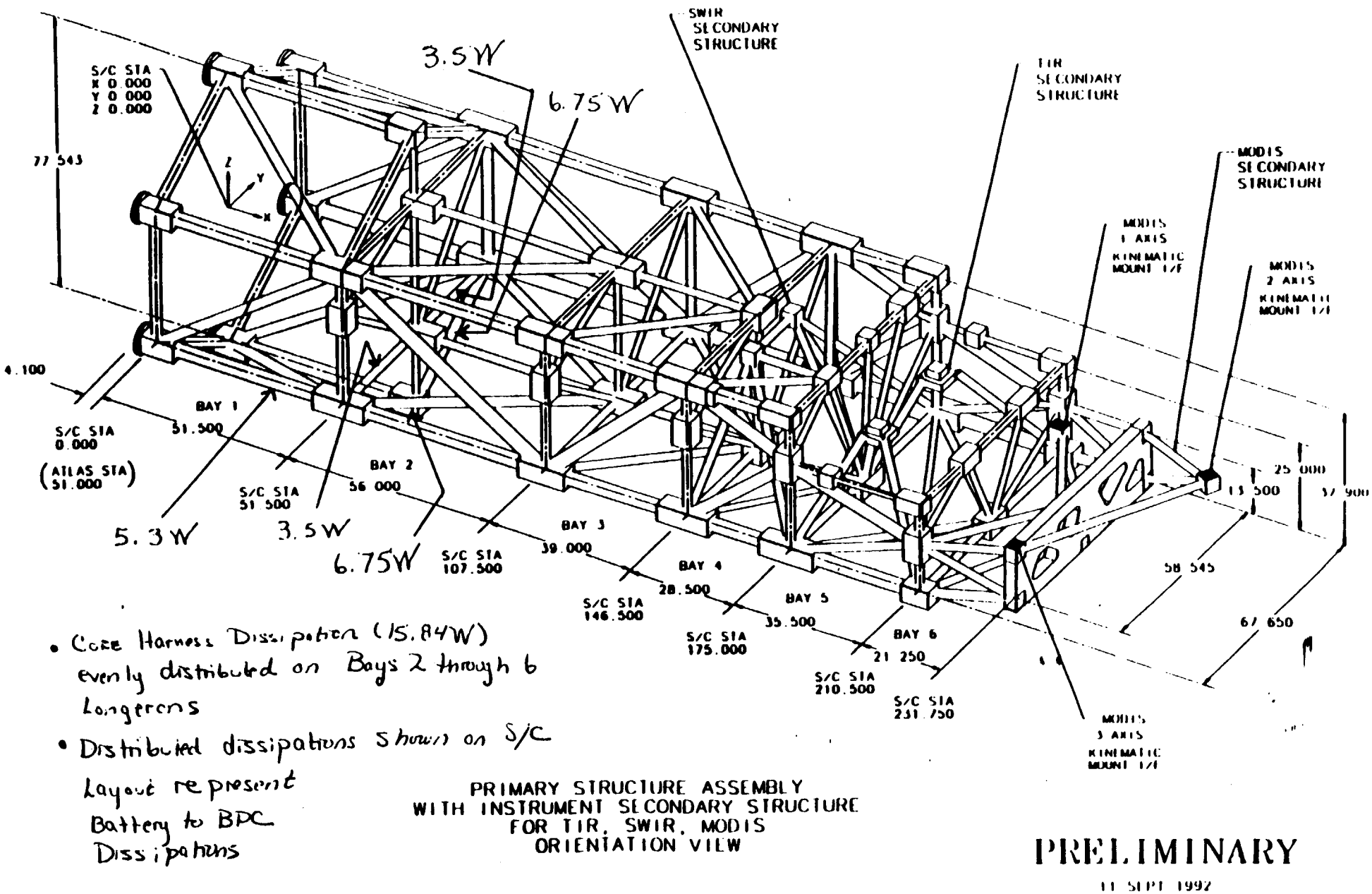

Figure 2.18 : Spacecraft Primary (Core) Structure

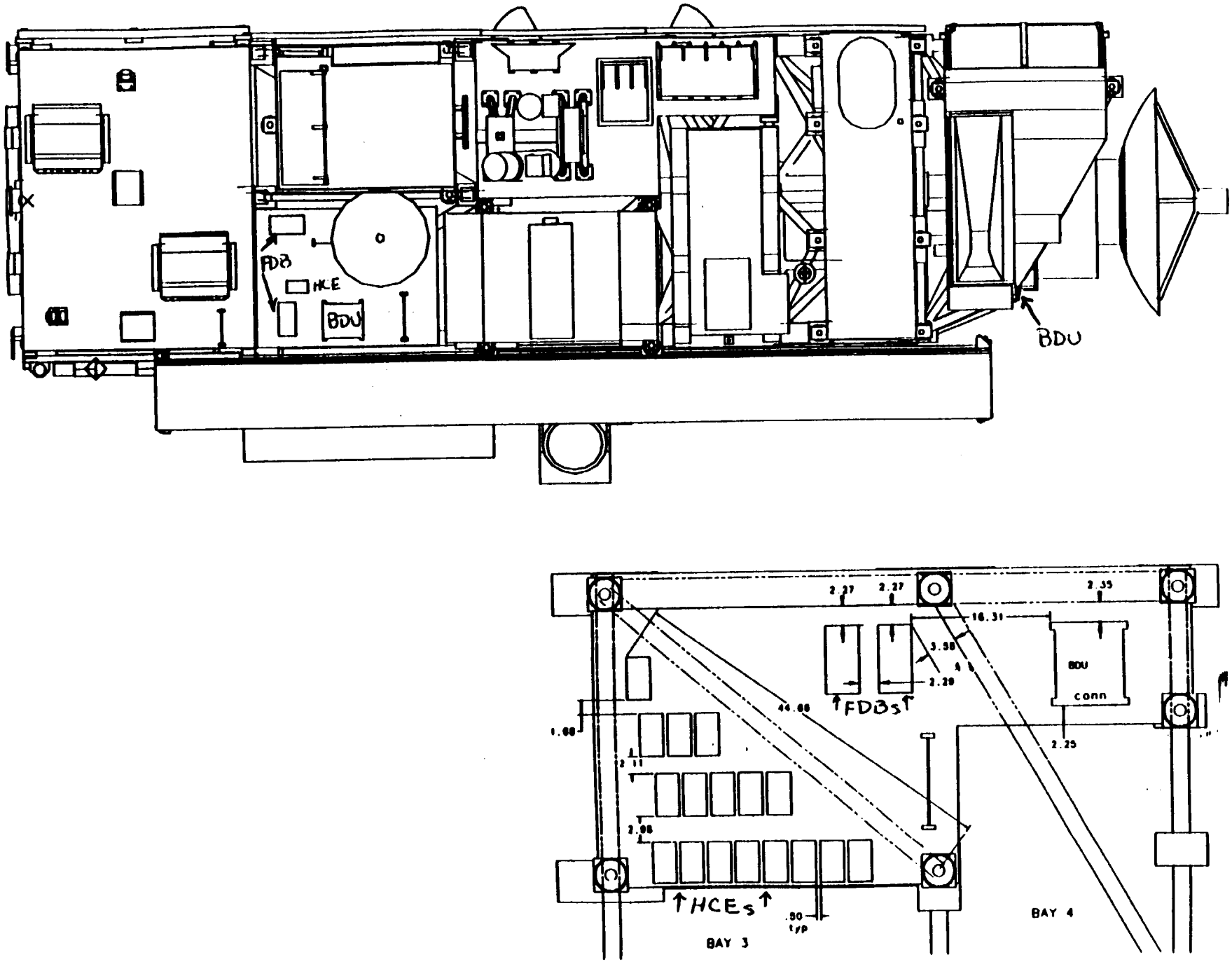

Figure 2.1° · IBDU and HCE(Instru) Locations

2.9 Distributed Housekeeping Equipment

Components included in this category include all those not contained within an Equipment Module (EM). Tables 2.27 and 2.28 summarize the distributed equipment temperature requirements and dissipations for different component operating states, and operating state definition for each Spacecraft operating mode that will be included in Spacecraft PDR analyses. Heater control for these components is as described in Section 1.8.1. HCE2 designs will be used for any components requiring heater power.

2.9.1 Spacecraft Core Structure

Figure 2.18 shows the detailed mechanical layout of the EOS-AM Spacecraft primary structure, as documented in Reference 39. The structure consists of graphite-epoxy (GE) tubes with Titanium end fittings that attach to Titanium node fittings. Details of these components are included in the primary structure TRASYS file used to generate core internal radiative couplings and the Spacecraft SINDA model used to determine temperatures and gradients.

2.9.2 Electrical Accommodations / Harnessing

Harness losses from the main power harness are included in the S/C level thermal models by including a power dissipation term on the structural tubes or equipment panel where the harness is routed. The following summary of harness dissipations is based on Ref 2.22:

Diss (watt)	Harness	Source location
12.27	Battery 1 to BPC 1	see Figure 2.18
13.49	Battery 2 to BPC 2	see Figure 2.18
2.74	Misc. loads(ICB to PDU)	hex closeout panel
5.04	ICB to PDU	hex closeout panel
2.39	BPC 1 to PDU	PMAD equipment panel
2.39	BPC 2 to PDU	PMAD equipment panel
7.83	ASTER power distribution	VNIR plate
15.84	CORE	see Figure 2.18
61.99	Total	

2.9.3 Magnetic Torquer Rods

Figure 2.1 illustrates the current location and orientation of the Magnetic Torquer Rods (MTRs) for the EOS Spacecraft.

2.9.4 Instrument BDUs and HCEs

Figure 2.19 also illustrates the current location of the Instrument Bus Data Units (BDUs) and HCEs for the EOS Spacecraft.

2.9.5 Sensors/Antennas

Figure 2.1 illustrates the current location of the external sensors and antennas for the EOS Spacecraft. The bracket design for the Earth Sensor Scanner (ESS) and the Fine Sun Sensor Head (FSSH) is shown in Figure 2.20.

2.9.6 Solar Array Equipment

Figure 2.21 depicts the current mechanical configuration of the solar array (S/A) equipment, including the Solar Array Drive (SAD), Sequential Shunt Unit (SSU), and the sub-contracted Solar Array Assembly (SAA) which includes the S/A, mast and cannister, blanket boxes, elevation hinge and DEU. Detailed analyses of the SAA are the responsibility of the subcontractor, TRW. For S/C level thermal analysis, reduced thermal models (RTMs) submitted by TRW were included in the S/C model. The RTMs provided by TRW are as follows :

TRASYS	: SAARDT21.INP	6/18/93
SINDA	: SAARDS21.SIN.	6/18/93

2.9.7 High Gain Antenna Equipment

Figure 2.21 also depicts the current mechanical configuration of the deployment hinge/damper and boom, and the subcontracted High Gain Antenna Assembly (HGA electronics box, reflector dish, and Gimbal Drive Assembly). Detailed analyses of the High Gain Antenna Assembly (HGAA) are the responsibility of the subcontractor, SPAR. RTMs provided by SPAR have been included in the S/C level model. In this model, the HGAA is assumed to be fixed with the reflector facing the +Y direction. RTMs provided by SPAR are as follows:

	TRASYS	SINDA	
Deployed	TRABOL.INP TRAEOL.INP	SINMDL.DAT	6/2/93
Stowed	TRABOL.INP TRAEOL.INP	TEMPRDL	6/30/93

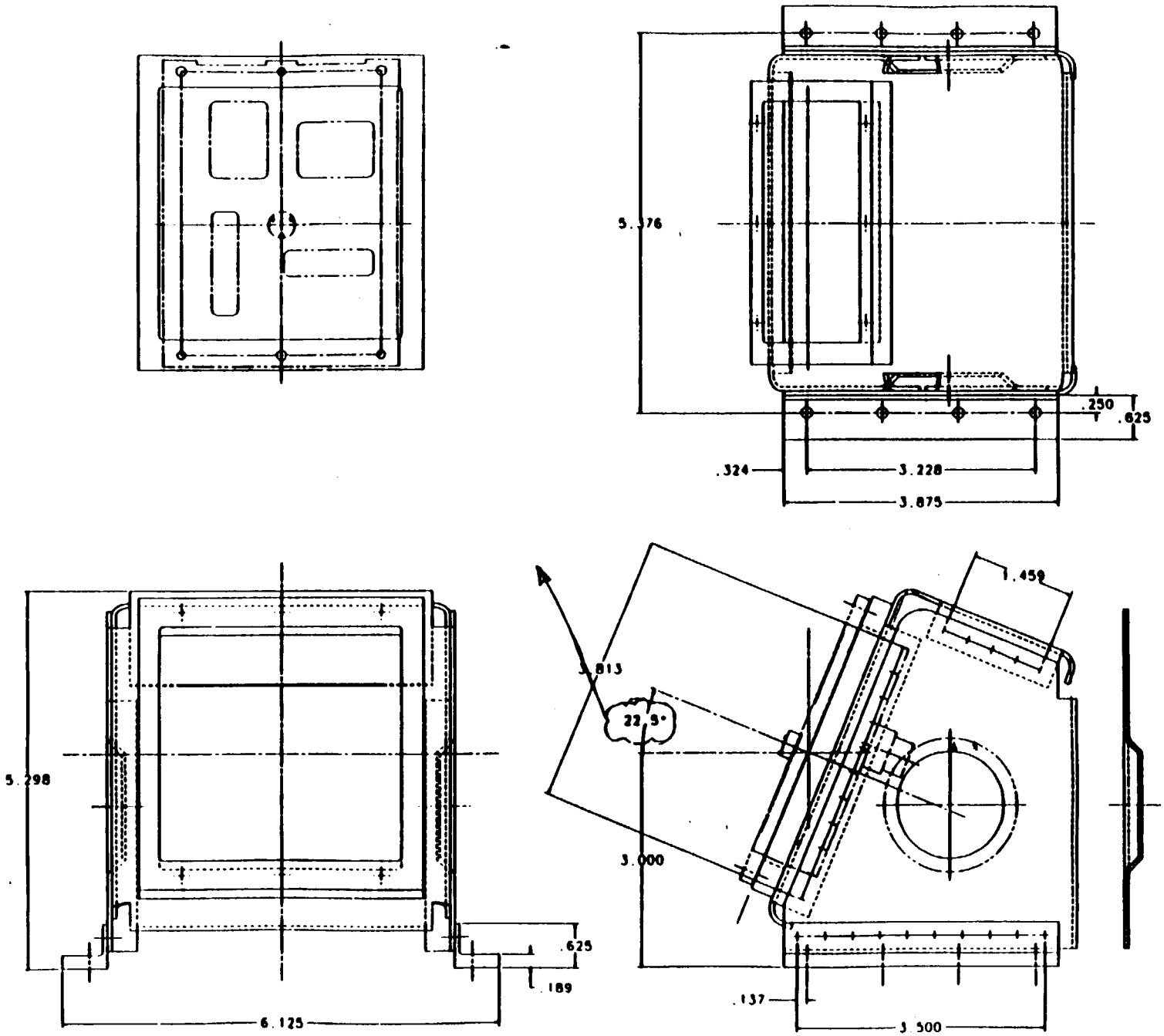
5.176
.250
.625
.324
3.228
3.875
5.298
.625
.189
6.125
1.459
.813
22.5°
3.000
.137
3.500

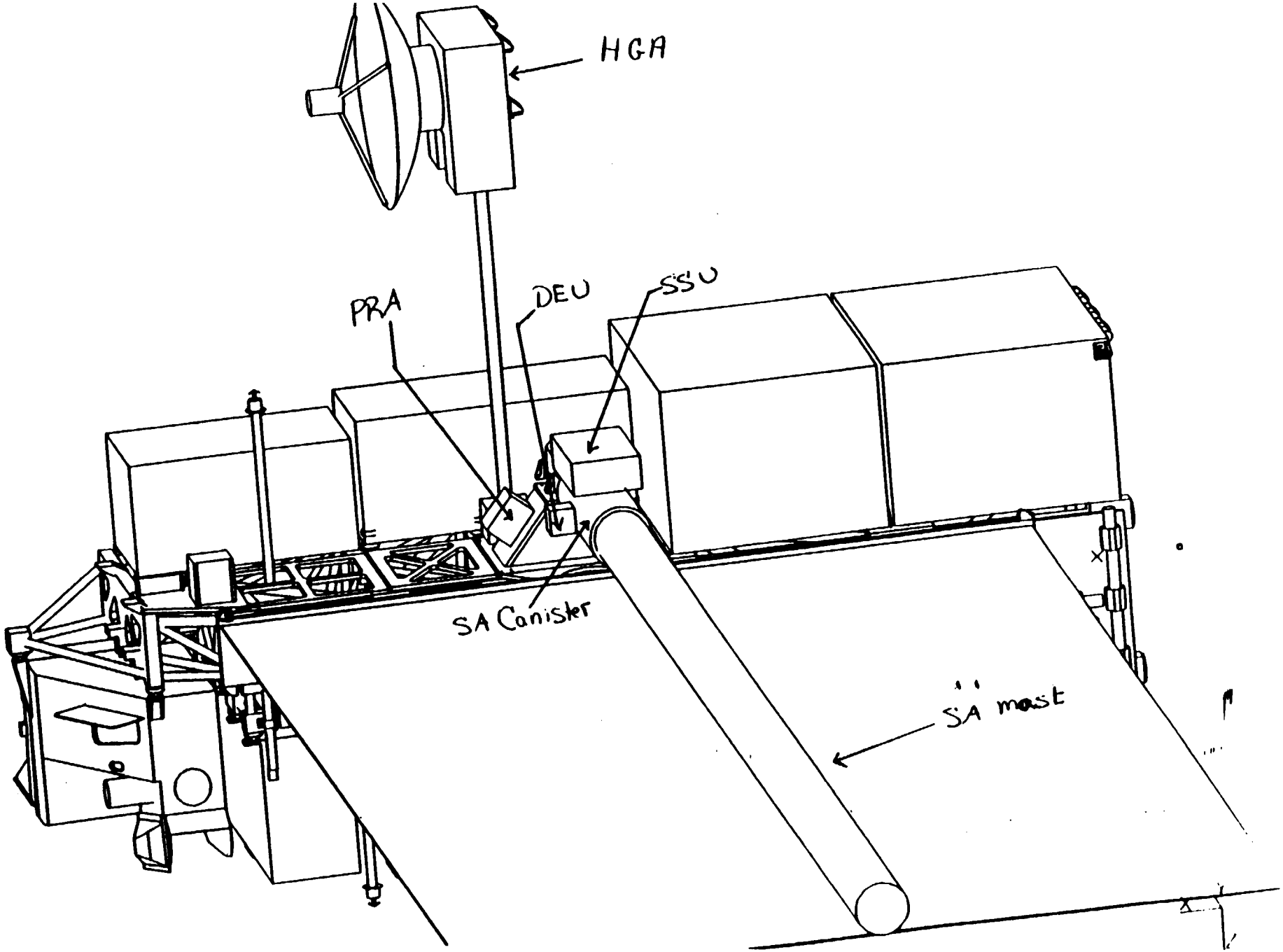

Figure 2.21 : Solar Array & HGA Layouts

Section 3 Instruments

3.1 Payload Configuration

This section documents the EOS AM Instrument configuration that will be used for S/C PDR analyses. An overall payload layout is shown in Figure 3.1. For S/C PDR thermal analysis of the Instruments, the latest GSFC provided RTMs will be used to include Instrument thermal control surfaces, internal nodes, and dissipations into the overall Observatory thermal model. The latest RTMs were received 11/92 and subsequently modified per GSFC memo. References 35, 36, and 37 document these deliveries. A summary of the RTMs used in this analysis is shown below.

Instrument		TRASYS	SINDA
ASTER			
	SWIR	SWR-THV3.INP	SWR-SHV3.INP SWR-SCV3.INP
	TIR	TIR-TH3.INP	TIR-SHV3.INP TIR-SCV3.INP
	VSR	VSR-THV3.INP	VSR-SHV3.INP VSR-SCV3.INP
	VEL	VEL-THV3.INP	VEL-SHV3.INP VEL-SHV3.INP
	CSP	CSP-THV3.INP	CSP-SHV3.INP CSP-SCV3.INP
	MPS	MPS-THV3.INP	MPS-SHV3.INP MPS-SCV3.INP
CERES		CRA-THV3.INP CRF-THV3.INP	CRA-SHV3.INP CRF-SHV3.INP
MISR		MSR-THV3.INP	MSR-SHV3.INP
MODIS		MDN-THV3.INP	MDN-SHV3.INP
MOPITT		MPT-THV3.INP	MPT-SHV3.INP

3.2 Instrument to Spacecraft Thermal Interface (General)

The thermal interface between the EOS AM Spacecraft and each Instrument consists of the mounting interface and the CPHTS coldplate, if used. Throughout the design phase, these interfaces have been defined by specifying the temperature range of the Spacecraft side of the mounting interface.

The thermal coupling of any Instrument to the Spacecraft includes conductive couplings through its structural mounting configuration (and CPHTS coldplate, if applicable) and a radiative coupling through the MLI on the underside of the Instrument to the mounting plate or S/C core, depending on whether a plate or direct (kinematic mount to primary structure node fitting) mounting system is used. Detailed descriptions and analysis of each CPHTS is documented in the CPHTS analysis report, Reference 40. Figure 3.2 provides a

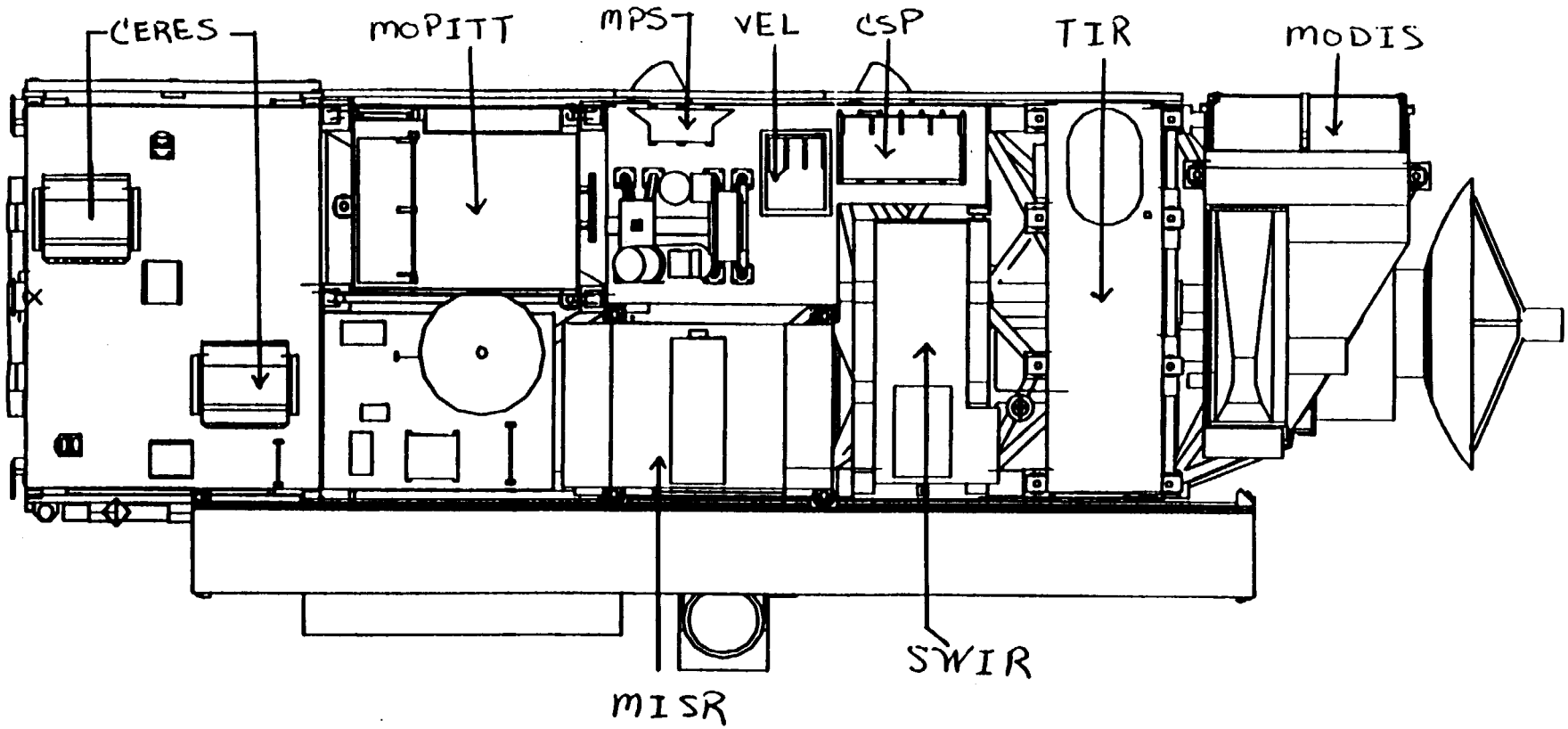

Figure 3.1 : Spacecraft Nadir Layout

Plate Mounted Instruments *

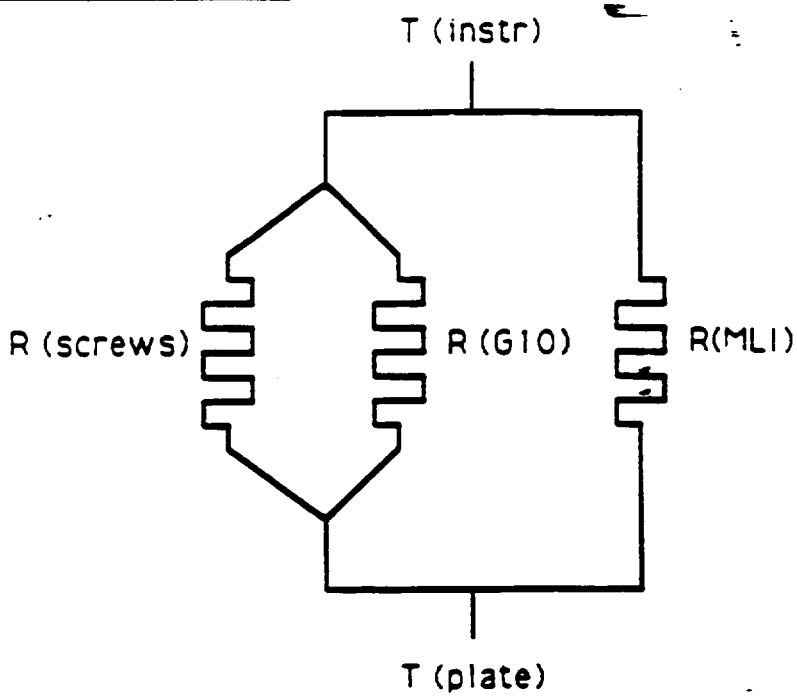

* No G10 isolation for ASTER VSR assumed

Kinematically Mounted Instruments

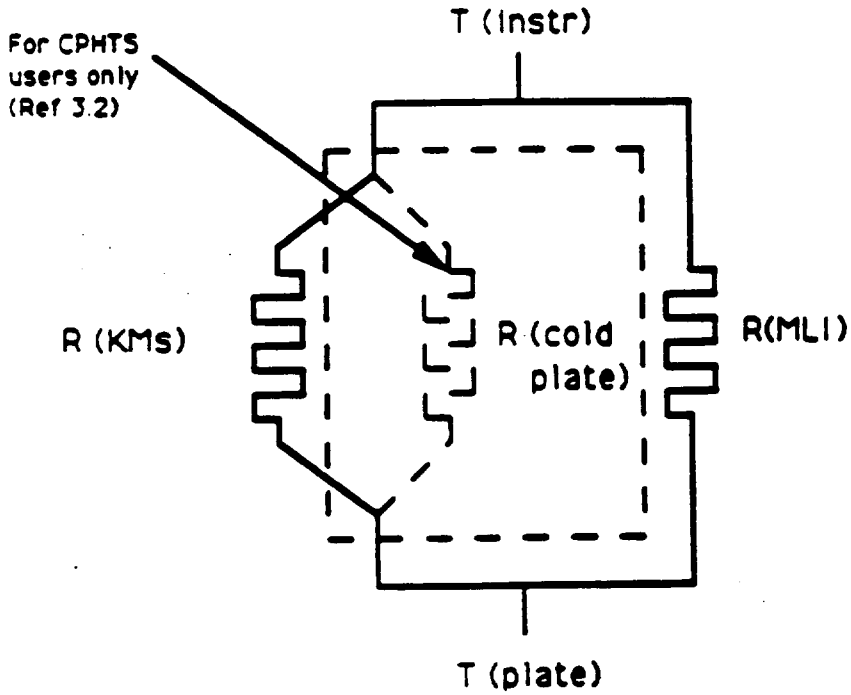

Figure 3.2 - Instrument to Platform Interface Conductance Schematic

schematic representation of the Instrument to Spacecraft thermal interface that is to be controlled.

For this analysis, it is assumed that:

EOS AM direct mount Instruments (ASTER: SWIR, TIR; MISR, MODIS, MOPITT) utilize a UARS heritage kinematic mount design to attach to the Spacecraft structural node fittings.

Plate, or hard mounted, Instruments (ASTER : CSP, MPS, VEL, VSR; CERES) attach to an IMP using Titanium screws and a combination of MLI and G10 thermal isolation material. ASTER VSR is assumed to have no isolation material between the mounting feet and the Instrument Mounting Plate (IMP).

CPHTS coldplate interface is 264 sqin with a 0.010 inch ChoTherm 1679 I/F material. The coldplate is mounted using 24 bolts (TBR).

20043119
CAGE No. 49671
14 July 1993

(Preliminary)
Ground System Requirements Database for EOS–AM Spacecraft

Prepared under:
Contract NAS5–32500
NASA Goddard Space Flight Center
Greenbelt, Maryland 20771

Prepared by:
Martin Marietta Corporation
Astro Space
P.O. Box 800
Princeton, New Jersey 08543–0800

REVISION LOG

This log identifies those portions of this document which have been revised since the original issue. Revised portions of each page, for the current revision only, are identified by marginal striping.

Revision	Paragraph Number(s) Affected	Rev. Date	Approval

TABLE OF CONTENTS

SECTION / PARAGRAPH	TITLE	PAGE
1	SCOPE	1
2	REQUIREMENTS	2

1 SCOPE

This document captures the content of the Ground System Requirements Database as it existed on July 14, 1993. The database is continuously being updated as requirements become known or change.

The Ground System Requirements Database is produced and maintained as one of a group of "on–line" databases using the INGRES application on the EOS–IIS. It is intended that the User seeking the latest information, will access the data via an EOS–IIS Workstation. This database will be maintained by Martin Marietta Corp. until its content is incorporated into an official program document.

These requirements are levied by the EOS–AM1 Spacecraft upon the EOS Ground System to ensure that the S/C will be operated in its designed manner.

2 REQUIREMENTS

1.1.2.1 Responsible Ground Element: EOC Last Revised 02–jul–1993

EOC shall be capable of sending EOS–AM real–time and load–data commands. Most EOS–AM commands shall be formatted as 1553–B data bus messages. (Direct CTIU Commands and FARM control commands are excepted) Each command is then formatted into a CCSDS packet (one command per packet) and the packet is formatted into a CCSDS Telecommand Transfer Frame for transmission through EDOS. Details of the formats and rates for EOS–AM commands are provided in the "Data Format Control Book" ICD–106

1.1.2.2 Responsible Ground Element: EOC Last Revised 31–mar–1993

The EOC shall be capable of generating commands to the Spacecraft during each scheduled TDRSS contact. Real–time commands to configure Spacecraft communications links and to dump the recorded data may be expected during each contact. Commands to change the S/C configuration, load the Stored Command Table, and load or change other S/C tables or memory locations, may also be sent during any scheduled contact at the discretion of the EOS FOT. It is expected that all table loads and memory loads will be transmitted during one or two selected contacts each day. TDRSS contacts scheduled for navigation–only, will not require EOC command capability and no downlink telemetry will be received.

1.1.2.3 Responsible Ground Element: EOC Last Revised 02–jul–1993

The EOC FOT shall perform stored command table maintenance operations such that:

A. Uploads of extensions to the on–board table are sent early enough to guarantee that any necessary load verification may be completed prior to the first of the uploaded commands being scheduled;

B. Uploads of extensions to the on–board table never overwrite table entries which have not yet been evaluated for dispatch, unless it is intended that those entries and all later ones never be dispatched;

C. The last commands in the currently–loaded list always cause spacecraft entry into a benign operating mode when dispatched and then suspends further stored–command processing until it is commanded to resume. This will maximize the probability of surviving for extended periods without a command contact, if contingency conditions require.

1.1.2.4 Responsible Ground Element: EOC Last Revised 31–mar–1993

The EOC command generation system shall be capable of addressing commands to either of two SC IDs which will be used by EOS–AM1. The two codes shall be used to address the uplink commands to either of the spacecraft Command and Telemetry Interface Units (CTIUs). The spacecraft ID will be contained in the uplink Transfer Frame header, bits 6 thru 15. The spacecraft IDs will be identical in the 8 most significant bits.

1.1.2.5 Responsible Ground Element: EOC Last Revised 02–jul–1993

The EOC command system shall initialize all command sequences with 128 "1 , 0" pairs. The command system shall also fill between non–contiguous commands in a command sequence with "1 , 0" pairs A sequence of toggling "1", "0", "1", "0", etc., is required to maintain bit timing for the S–band transponder. A minimum of 128 "1 , 0"s is required for symbol synchronization acquisition. During absence of command data on the input to the White Sands Complex (WSC) ground terminal, the ground terminal data interface system is required to clamp the input to the RF modulation string to logical "one". Therefore, if continuous symbol synchronization is desired, active commands or fill data or symbol synchronizing data are required from the EOC. A minimum time separation for non–continuous commands is required if loss of transponder symbol synchronization is detected. This separation is at least equivalent to the minimum transmission of 128 "1"0"s.

1.1.2.6 Responsible Ground Element: EOC Last Revised 02–jul–1993

The rate of EOC commands to the EOS–AM shall be selectable to 125 bps, 1 Kbps, 2 Kbps, or 10 Kbps. The command rate may be changed by the FOT operator during a TDRS contact

1.1.3.1 Responsible Ground Element: EOC Last Revised 31–mar–1993

The EOC shall accept from EDOS and process all spacecraft telemetry data received on the EOS–AM S–band link. EOC shall also accept from EDOS and process selected housekeeping data in the form of level–zero–processed or quick–look data sets.

1.1.3.2 Responsible Ground Element: EOC Last Revised 31–mar–1993

EOC shall process and evaluate 16 Kb real–time housekeeping telemetry data, for each spacecraft subsystem and instrument, for health and safety and to verify proper performance. Simultaneous processing of separate 1 Kb and 16 Kb data streams is not required.

1.1.3.3 Responsible Ground Element: EOC Last Revised 02–jul–1993

EOC shall process and evaluate 1 Kb health and safety telemetry data, when received, for each spacecraft subsystem and instrument, if 16 Kb data is not also being received. Simultaneous processing of separate 1 Kb and 16 Kb data streams is not required.

1.1.3.4 Responsible Ground Element: EOC Last Revised 31–mar–1993

EOC shall process and evaluate the 256 Kb recorder playback telemetry data. Simultaneous processing of the 16 Kb Housekeeping data and the 256 Kb recorder playback data shall be accommodated.

1.1.3.5 Responsible Ground Element: EOC Last Revised 31–mar–1993

EOC shall process and evaluate the 512 Kb recorder playback telemetry data . Simultaneous processing of the 16 Kb Housekeeping data and the 512 Kb recorder playback data shall be accommodated.

1.1.3.6 Responsible Ground Element: EOC Last Revised 31–mar–1993

EOC shall process and evaluate the 16 K Diagnostic telemetry (Memory Dump or dwell data). Simultaneous processing of 16 Kb Housekeeping data and 16 Kb Diagnostic data shall be accommodated.

1.1.3.8 Responsible Ground Element: EOC Last Revised 31–mar–1993

EOC shall process and evaluate the 1 Kb Diagnostic telemetry (Memory Dump or dwell data). Simultaneous processing of 1 Kb Health and Safety data and the 1 Kb Diagnostic data shall be accommodated.

1.1.5.1 Responsible Ground Element: EOC Last Revised 31–mar–1993

The EOC Telemetry, Command, and Procedure Database applications shall be capable of importing data which has been developed by the Spacecraft provider using INGRES and OASIS applications.

1.1.5.2 Responsible Ground Element: EOC Last Revised 31–mar–1993

The EOC database shall provide the structure for storing all the information, relevant to the EOS–AM spacecraft, that is needed to support the operation of the spacecraft from the EOC. The database shall include information about telemetry, commands, event determination, alarms, reaction messages, and CRT displays. Operational tools shall be provided for data entry, data validation, and for display of the database.

1.2.2.1 Responsible Ground Element: EOC Last Revised 31–mar–1993

EOC shall verify spacecraft receipt of commands. The EOS–AM command uplinks will be formatted according to the CCSDS Telecommand uplink protocols and provide command transmission verification using the Command Operating Procedure 1 (COP–1). Use of COP–1 protocol explicitly guarantees that the command uplink stream will be received completely, in the correct sequence, without error, and in the correct format. Any error detection will halt processing of the command uplink stream. The CLCW status word downlinked as part of the housekeeping telemetry overhead will indicate that this has occurred. EOC will also receive an indication of the command counter status. This will allow identification of the first rejected command and re–transmission of the command load starting with the first rejected command.

1.2.2.2 Responsible Ground Element: EOC Last Revised 02–jul–1993

EOC shall verify dispatch of stored commands. Stored commands will initially be routed to the stored command table in the SCC. EOC will maintain an identical copy of the stored command table for verification. Stored commands will be dispatched according to the time–tag transmitted with the command, command dispatch will cause the stored command table pointer to increment. The value of the stored command table pointer will be transmitted to the ground as part of the housekeeping telemetry data, thereby providing verification that the stored command was dispatched.

1.2.2.3 Responsible Ground Element: EOC Last Revised 31–mar–1993

EOC shall verify dispatch of relative time sequence commands. Relative time sequence commands will be dispatched onboard at fixed times relative to the triggering of the sequence. These commands will be stored in a separate process table. Downlinked telemetry will indicate if a particular command sequence is active, and allow determination of the time at which it was activated. From this data, EOC analysis can project when each command in the sequence will be dispatched for execution.

1.2.2.4 Responsible Ground Element: EOC Last Revised 31–mar–1993

The EOC shall verify dispatch of FDIR commands. FDIR commands will be dispatched by internal processes in the flight software. The flight software telemetry will indicate the status of all monitor processes and indicate the condition which caused an FDIR command to be executed.

1.2.2.5 Responsible Ground Element: EOC Last Revised 31–mar–1993

EOC shall verify discrete pulse command execution. This type of command will generally be used to change the state of a relay or logic circuit and will be verified by a status change in the effected element's telemetry data.

1.2.2.6 Responsible Ground Element: EOC Last Revised 31–mar–1993

The EOC shall verify execution of serial commands. Execution of serial commands will cause a register or memory location to be loaded with the command argument. In some cases serial commands will be decoded to initiate state transitions or sequences of events. Verification of execution, therefore, may be either by echoing the loaded register or memory value back in telemetry or by watching for status changes in the effected component's telemetry data.

1.2.2.7 Responsible Ground Element: EOC Last Revised 02–jul–1993

The EOC shall uplink a new spacecraft time bias estimate once per day. In general, the Spacecraft clock error will grow with time between adjustments due to the integrated effect of frequency errors in the Master Oscillator. The worst–case error growth rate is 864 microseconds per day. The TONS flight software utilizes a Kalman filter algorithm to process one–way forward Doppler data to estimate the Spacecraft navigation state vector. The navigation software maintains a running estimate of the bias in the S/C clock relative to UTC using the frequency error estimates from the state vector. Ground–commanded estimates of the S/C clock bias with respect to UTC (based on USCCS measurements) are used to establish the accuracy of this estimate to within a few microseconds (10 are allocated), and are received as often as once per day. On receipt of a S/C clock bias command, TONS updates its running error estimate to equal that commanded. Navigation considerations require that the error in the time bias estimate not exceed 50 microseconds total, so 38 microseconds is allocated to the onboard propagation error. Current estimates indicate that growth of the time bias estimation error will not exceed 10 microseconds per day when a nominal TONS tracking schedule is maintained, indicating that the required accuracy is achievable with once–per–day bias commands.

1.2.2.8 Responsible Ground Element: EOC Last Revised 02–jul–1993

The EOC shall command spacecraft clock adjustments on an as–needed–basis (as often as once per month) to maintain clock accuracy within 40 msec of UTC. The S/C clock may be set and adjusted by command from the ground or from the SCC–resident software in order to initialize it or to correct errors. Both "Absolute Time" set commands (to jam in an initialization value) and "Delta Time" adjustment commands(to make fine adjustments to the current value) are supported. Cyclic processes may have to resncyhronize or reconverge after the disruption caused by commanded adjustment. Absolute–Time set commands generally cause service interruptions in the navigation system and are used only for system initialization and failure recovery. Delta–Time adjustments cause only minimal perturbations of the system for brief intervals, and are used for routine clock adjustments. The S/C clock may be set by command to an accuracy of one millisecond and with a resolution of one millisecond. Delta–Time adjustment commands are executed with a precision of one microsecond. Clock maintenance activities (such as fine clock adjustments), which may cause service outages of 10 minutes or less, shall be required no more than once per month.

1.2.2.9 Responsible Ground Element: EOC Last Revised 02–jul–1993

The EOC shall command the spacecraft master oscillator frequency adjustment on an as–needed–basis. Recovery to full Science Mode performance after such a disruption shall in all cases take no more than 6 hours. Clock maintenance activities (such as oscillator frequency adjustments or clock resets) which may cause service outages greater than 10 minutes in duration shall be required no more than once per year.

1.2.2.10 Responsible Ground Element: EOC Last Revised 02–jul–1993

The EOC shall verify load–data commands. Load–data commands will cause a memory or register location to be loaded with the command argument. Verification shall be accomplished by comparison of the onboard generated CRC with the ground generated CRC which is included in the Load Initiate command.

1.2.2.11 Responsible Ground Element: EOC Last Revised 31–mar–1993

Spacecraft Bus Utilization Table updates from EOC shall set a status bit within the table, which identifies it as "revised". This will enable the ground operator to ensure that the original rom table has not been reloaded. This status shall be included in the housekeeping telemetry data

1.2.5.1 Responsible Ground Element: EOC Last Revised 31–mar–1993

The active CTIU maintains data for tracking retries and other C&T 1553 bus anomalies, which is included as part of the data portion of the housekeeping packet. The EOC Off–Line Analysis system shall trend this data to determine onboard problems.

1.4.4.1 Responsible Ground Element: EOC Last Revised 31–mar–1993

To provide primary navigation support, EOC shall obtain from FDF and uplink (to EOS–AM) four TDRS position and velocity vectors. This will occur as often as once per day.

1.4.4.2 Responsible Ground Element: EOC Last Revised 31–mar–1993

To provide primary navigation support,EOC shall obtain notification of TDRSS propulsive maneuvers from FDF. EOC shall uplink the command to set a flag to indicate TDRSS propulsive maneuvers

1.4.4.3 Responsible Ground Element: EOC Last Revised 31–mar–1993

EOC shall obtain from FDF and uplink, to EOS–AM, an initial state vector and associated state error covariance matrix for the primary navigation system.

1.4.4.4 Responsible Ground Element: EOC Last Revised 31–mar–1993

To provide primary navigation support, EOC shall obtain and uplink, to EOS–AM, a solar activity parameter. This will occur as often as once per day.

1.4.4.5 Responsible Ground Element: EOC Last Revised 31–mar–1993

EOC shall uplink, to EOS–AM, navigation mode changes, initialization data, filter tuning parameters, other data base parameters, and navigation software updates as necessary for primary navigation.

1.4.4.6 Responsible Ground Element: EOC Last Revised 31–mar–1993

To provide primary navigation support, EOC shall transfer TONS performance related telemetry to the FDF.

1.4.4.7 Responsible Ground Element: EOC Last Revised 31–mar–1993

The EOC shall obtain from FDF and uplink to EOS–AM, a backup EOS state vector and mean orbit elements as often as once per 24 hours, and as necessary after EOS propulsive maneuvers.

1.4.4.8 Responsible Ground Element: EOC Last Revised 31–mar–1993

The EOC shall obtain from FDF and uplink, to EOS–AM, four backup TDRSS mean orbit elements as often as once per 24 hours, and as necessary after TDRSS propulsive maneuvers.

1.4.4.9 Responsible Ground Element: EOC Last Revised 31–mar–1993

EOC shall provide periodic updates of the spacecraft clock time bias. The EOS–AM spacecraft requires accurate on–board time for the tagging of attitude sensor telemetry, instrument science data, and TONS related input and Doppler measurement data. TONS has the capability onboard to maintain an estimate of the spacecraft clock time bias via integration of frequency bias and drift estimates, but the Doppler–only measurements cannot be used to estimate the time bias. TONS therefore requires that periodic updates of this time bias be supplied by the ground system.

1.4.4.10 Responsible Ground Element: EOC Last Revised 31–mar–1993

To support clock calibration, the EOC shall supply an initial estimate of the Spacecraft clock using the Return Data Delay (RDD) technique. This estimate will be used for initialization of the User Spacecraft Clock Calibration System (USCCS) .

1.4.4.11 Responsible Ground Element: EOC Last Revised 31–mar–1993

To support clock calibration, the EOC shall receive the appropriate NGT time transfer message via its NCC or WSGT interface.

1.4.4.12 Responsible Ground Element: EOC Last Revised 31–mar–1993

To support clock calibration, the EOC shall receive and access the PN code time transfer epoch receive time as tagged by the spacecraft clock and supplied in the EOS–AM telemetry.

1.4.4.13 Responsible Ground Element: EOC Last Revised 31–mar–1993

To support clock calibration, the EOC shall process data via the USCCS to determine the adjustments needed for synchronization of the spacecraft clock relative to UTC.

1.4.4.14 Responsible Ground Element: EOC Last Revised 31–mar–1993

The EOC shall supply to the spacecraft, clock calibration updates, on an as needed basis (as often as once per day), to maintain the onboard time estimate to +/– 100 microseconds.

1.4.4.15 Responsible Ground Element: EOC Last Revised 31–mar–1993

The EOC shall maintain an independent estimate of the spacecraft clock, accurate to +/– 10 microseconds (TBR), to be used as backup to the TONS time maintenance function. FDF estimate of spacecraft frequency error will support this function.

1.4.4.16 Responsible Ground Element: EOC Last Revised 31–mar–1993

The EOC shall supply to the Spacecraft, the TDRSS contact schedule, TDRS transmit frequency, and TDRSS ground antenna ID, for every scheduled contact.

1.5.2.1 Responsible Ground Element: EOC Last Revised 31–mar–1993

The solar array shall not be commanded directly from forward to reverse, or from reverse to forward rotation. The array stop command shall precede the new direction command by TBD time

1.5.3.1 Responsible Ground Element: EOC Last Revised 31–mar–1993

The EOC shall monitor and evaluate the status of the Electrical Power Subsystem (EPS) Power Monitoring and Control Software (PMCS). The onboard PMCS provides autonomous monitoring and control of the Electrical Power Subsystem (EPS). On–going autonomous monitor and control (Closed Loop) procedures are undertaken by the PMCS for related Spacecraft state and battery health. Controlling commands are issued to the Command, Telemetry and Control function for distribution to the EPS components. The PMCS provides it's status telemetry to the Command, Telemetry and Control function to be included in the telemetry to the ground. Telemetry that is requested includes various currents, battery parameters, various voltages, solar array parameters and Spacecraft sun state. Various EPS parameters are calculated for other PMCS functions and to be provided to the ground in telemetry such as: Spacecraft Day/Night duration, Battery discharge Amp–minutes, Battery charge to discharge ratio, Variable battery charge rate, Fixed battery charge rate, Trickle charge rate, Battery theoretical State Of Charge (SOC), Battery actual SOC, Battery SOC based on pressure.

1.5.5.1 Responsible Ground Element: EOC Last Revised 31–mar–1993

The EOC Power Analysis function shall perform day/night duration calculation to verify the continuing accuracy of the onboard calculation.

1.5.5.2 Responsible Ground Element: EOC Last Revised 31–mar–1993

The EOC Power Analysis function shall perform battery discharge amp–minute calculation to verify the continuing accuracy of the onboard calculation. The battery depth of discharge at any position within the power management orbit is calculated by subtracting the discharge or adding the charge ampere–minute, frame by frame, from zero and dividing by the nominal battery ampere rating. The resulting ratio is multiplied by 100% to determine depth–of–discharge. (Battery state–of–charge is determined by subtracting the ratio from 1.0 and multiplying by 100%).

1.5.5.3 Responsible Ground Element: EOC Last Revised 31–mar–1993

EOC Power Analysis function shall perform the required battery charge/discharge ratio calculation to verify the continuing accuracy of the onboard calculation.

1.5.5.4 Responsible Ground Element: EOC Last Revised 31–mar–1993

The EOC Power Analysis function shall perform the variable battery charge rate determination to verify the continuing accuracy of the onboard determination. V/T curve selection will be by ground command.

1.5.5.5 Responsible Ground Element: EOC Last Revised 31–mar–1993

The EOC Power Analysis function shall perform the fixed battery charge rate determination to verify the continuing accuracy of the onboard calculation.

1.5.5.6 Responsible Ground Element: EOC Last Revised 31–mar–1993

The EOC Power Analysis function shall perform the battery trickle charge rate determination to verify the continuing accuracy of the onboard determination.

1.5.5.7 Responsible Ground Element: EOC Last Revised 31–mar–1993

The EOC Power Analysis function shall perform the battery state–of–charge calculation based upon pressure to verify the continuing accuracy of the onboard calculation. The battery state of charge at any position within the power management orbit is calculated by subtracting the discharge or adding the charge ampere–minute, frame by frame, from the nominal battery ampere–minute rating and dividing the value by the nominal ampere–minute rating. The resulting ratio is multiplied by 100%.

1.5.5.8 Responsible Ground Element: EOC Last Revised 31–mar–1993

The EOC Power Analysis function shall perform the individual user load power calculations to verify the continuing accuracy of the onboard calculations. Individual load power, calculated by the product of the individual load bus current and the common load bus voltage, will be integrated with respect to time to yield individual load bus energy.

1.5.5.9 Responsible Ground Element: EOC Last Revised 31–mar–1993

The EOC Power Analysis function shall perform load shedding determination to verify the continuing accuracy of the onboard determination.

1.5.5.10 Responsible Ground Element: EOC Last Revised 31–mar–1993

The EOC Power Analysis function shall perform SAD direction and rotational rate calculations to verify the continuing accuracy of the onboard calculations.

1.5.5.11 Responsible Ground Element: EOC Last Revised 31–mar–1993

The EOC Power Analysis function shall perform battery actual state–of–charge calculations to verify the continuing accuracy of the onboard calculations.

1.5.5.12 Responsible Ground Element: EOC Last Revised 31–mar–1993

The EOC Power Analysis function shall perform battery theoretical state–of–charge calculations to verify the continuing accuracy of the onboard calculations.

1.5.5.13 Responsible Ground Element: EOC Last Revised 31–mar–1993

The EOC Power Analysis function shall perform solar array power calculation to verify the continuing accuracy of the onboard calculation. The solar array power, calculated by the product of solar array voltage and current, will be integrated with respect to time over the power management orbit to yield solar array energy input.

1.5.5.14 Responsible Ground Element: EOC Last Revised 31–mar–1993

EOC shall utilize a power analysis program to analyze the performance of the solar array, batteries, electronics and energy balance.

@@@@The Power Analysis program will determine the correct Voltage/Temperature curve selection. The correct V/T curve will be selected on–board by ground command from the EOC.

A solar array power summary, battery power summary, and power system summary report shall be calculated and formatted for display or printout.

Power analysis shall be made on a power management orbit which is a complete spacecraft night followed by a complete spacecraft day. Any calculation using two telemetry functions shall use telemetry samples as close together in time as possible, as power parameters are dynamic and the calculation is only valid when the time difference is small enough to neglect dynamic changes.

1.6.7.1 Responsible Ground Element: EOC Last Revised 02–jul–1993

The EOC shall ensure that the Attitude Control Electronics (ACE) is not enabled by ground command to fire thrusters unless the Latch Valve is first verified to be open. This is to prevent emptying the fuel lines, which could allow an inrush of fuel to damage a thruster

1.7.3.1 Responsible Ground Element: EOC Last Revised 31–mar–1993

The EOC shall monitor and evaluate the The Thermal Monitoring and Control Software (TMCS) telemetry. TCMS functions as a component of the Thermal Control Subsystem (TCS) which monitors Spacecraft thermal parameters and will manage the Capillary Pump Heat Transport System (CPHTS) operation. The TMCS controls the CPHTS during operations by issuing commands to the CPHTS. The TMCS function monitors temperature telemetry points of the active components of the TCS. Telemetry is returned to the TMCS as a response to SCC OS/Executive requests. These telemetry points are the capillary pump loop temperatures in the CPHTS. The software controls start–up, operation and shut–down of the CPHTS by issuing control and Fault Detection, Isolation and Recovery (FDIR) commands through the Command, Telemetry and Control function to the CPHTS components. The TMCS provides it's status telemetry to the Command, Telemetry and Control function which is passed to the ground. Processing within the TMCS is controlled by commands received from the Command, Telemetry and Control function.

1.8.2.1 Responsible Ground Element: EOC Last Revised 31–mar–1993

The EOC shall be able to issue various types of commands to the Flight Software System. The commands include the following capabilities:a. Changing Spacecraft mode such as enter Science Modeb. Instrument mode changes. FSWS application software mode changes such as enter the GN&C Orbit Adjust submode. Load the FSWS software. Load any instrument software. Load and dump FSWS application data such as GN&C software tables, for example TDRSS ephemeris. Modify instrument tables. Modify Spacecraft command tables such as the stored command table, the relative time command sequences and telemetry monitors in SCC memory. Hardware reconfiguration commands. Inhibit/Enable all SCC commands and any command inhibit category. Disable/Enable SCC application software processes

1.8.2.2 Responsible Ground Element: EOC Last Revised 31–mar–1993

EOC shall monitor and evaluate housekeeping telemetry for command CRC check failures. All commands, which are greater than 32 16 bit words (such as program load or table load), are assembled in the order in which they were received and a CRC check is performed to ensure that the command is rebuilt properly. Upon a CRC check failure the command or load is rejected (TBD) and the ground is notified via an indication in telemetry. A message is written to the Spacecraft activity log in the SCC OS/Executive software via an SCC OS/Executive service request.

1.8.2.3 Responsible Ground Element: EOC Last Revised 31–mar–1993

The EOC shall be capable of commanding and responding to spacecraft mode changes. The Spacecraft Mode Control flight software manages and controls all Spacecraft modes in which the SCC is operational. All rules governing mode transitions are enforced. Spacecraft Mode Control ensures that the appropriate level of support for each mode is provided by the Spacecraft subsystems and SCC application software. All modes are commandable by the ground. FDIR commands from SCC application software are accepted to command a new Spacecraft mode During all modes, except Safe Mode, upon verifying that the SCC is capable of controlling the Spacecraft attitude, Mode control makes an SCC OS/Executive Service Request to issue the SCC OK message to the CTIU. In Safe Mode the SCC OS/Executive Service Request does not make the service request to issue the SCC OK message. The current Spacecraft mode is made accessible for all SCC application software. The following Spacecraft modes and their transitions are supported: Ground Test Mode, Standby Mode, Science Mode, Delta–V Mode, Survival Mode, Safe Mode.

1.8.2.4 Responsible Ground Element: EOC Last Revised 31–mar–1993

The EOC shall be capable of loading and verifying the Stored Command Table. The onboard Stored Command Processing software provides a time based stored command execution capability. Spacecraft commands are stored in a table (stored command table) along with an absolute time tag and command inhibit ID which is loadable by the ground for easy updating. No editing capability is provided but partial table loads are accommodated. The time tag has a resolution of 128 milliseconds (TBR). The command inhibit ID identifies the stored command as part of an operational command category. Stored commands are dispatched for execution based on the absolute time tag in chronological order. The stored command table pointer is available for telemetry. Dispatched commands, along with the command inhibit id, are issued to the Command Sequencing software for distribution. Stored commands may perform SCC table modifications by commanding SCC software applications. The stored command table has a minimum size limitation of 3000 absolute time commands (time tag plus Spacecraft command plus command inhibit id) which may be used for both Spacecraft subsystem and instrument commands. The stored command table integrity is routinely checked by computing a Cyclic Redundancy Code (CRC) and comparing it to the CRC associated (and forwarded) with the table data. Comparison results are reported in telemetry. Failures in the CRC check will result in the table being rejected. The Stored Command Processing software is commandable ON/OFF

1.8.2.5 Responsible Ground Element: EOC Last Revised 31–mar–1993

The EOC shall be capable of modifying and controlling the onboard Relative Time Command Sequence (RTCS). A RTCS consists of up to 16 Relative Time Commands (RTC) preceded with a RTCS sequence number and a RTCS inhibit id. Relative time command sequences are activated by sequence number and each command in the sequence is dispatched for execution in the order in which they appear. Each command in the sequence may be delayed relative to the dispatching of the previous command by a relative time tag associated with each command entry in the sequence. The relative time tag has a resolution of 128 milliseconds. The Relative Time Command Sequence software accommodates 128 RTCSs each with up to 16 RTCS for a total storage of 2048 RTCs. Each RTC can activate other RTCSs and an individual RTC can perform SCC table modifications by commanding SCC software applications. The Telemetry Monitor software utilizes this software by activating command sequences to perform autonomous actions. Ground Operations and the Stored Command Processing software benefit by allowing frequently repeated command sequences to be available on board for execution. Relative Time Command Sequences are activated in response to a ground command, dispatched stored commands or by software application commands (TMON,FDIR). Relative time command sequences are loaded via ground command. The Relative Time Command Sequence software is also commandable ON/OFF and each RTCS is individually commandable to an ENABLE/DISABLE state. Relative Time Commands can activate other RTCS.

1.8.2.6 Responsible Ground Element: EOC Last Revised 31–mar–1993

The EOC shall be capable of inhibiting SCC stored commands. In the cases of certain anomalies and certain unplanned operations, the issuance of groups of functionally related commands from the stored command table or relative time command sequences must be inhibited. This is needed to allow expeditious ground override of planned or autonomously performed activities. Absolute time commands and relative time commands are associated with command inhibit identifiers. The Command Sequencing software checks the command inhibit identifiers against a command inhibit table. If the command inhibit id is set true in the table the command is discarded and not distributed for execution. The command inhibit identifiers and the command inhibit table accommodates up to 64 command inhibit classes. Each command inhibit class is individually set or cleared by ground command or by SCC software applications. The status of the command inhibiting software is available for the Collect SCC Telemetry software for inclusion in SCC telemetry.

1.8.2.7 Responsible Ground Element: EOC Last Revised 31–mar–1993

The EOC shall be capable of modifying and controlling the onboard Telemetry Monitor (TMON). The TMON software provides a generic capability to monitor Spacecraft housekeeping data and SCC memory, and initiate Fault Detection, Isolation and Recovery (FDIR) and normal operation actions based on pre–determined telemetry states. The software allows flexibility in the telemetry points to be monitored and the actions taken when predefined conditions are satisfied. TMON can apply a predefined mask to a telemetry point for masking out just the needed information. The telemetry monitor is capable of an IF–THEN–ELSE construct using relational operators (<,>,=,<=, >=, and NE) to compare telemetry points to numeric values. Based upon the results of the comparison, a specific predetermined action is performed. Logical operations (And/Or/Not) among telemetry relational comparisons are provided for more complex triggering of the predefined command. The predefined command can be no action, a Spacecraft command or a command to activate a relative time command sequence. Upon triggering a predefined command TMON has the capability to provide a message in the Spacecraft activity log per individual triggered command. All of the above information is organized into telemetry monitor tables which are uploaded to TMON by ground command. TMON accepts ground commands to Enable/Disable individual telemetry monitors as well as an ON/OFF TMON command. TMON also accepts a ground command to inhibit the issuance of the the predefined command but still enable the telemetry monitor to allow the relational comparison check.

1.8.2.8 Responsible Ground Element: EOC Last Revised 31–mar–1993

The EOC shall be capable of modifying the onboard telemetry collection table. Onboard Collect SCC Telemetry software gathers and formats SCC hardware and software telemetry for the 1 Kbps and 16 Kbps telemetry downlink streams. As a result of this, the Collect SCC Telemetry process has interfaces with all SCC software to gain access to telemetry data. The collection process is table driven, utilizing the Major and Minor Cycle count, which contains the telemetry point to be collected and where to include the data in the downlink telemetry streams. SCC telemetry is provided to the CTIU for inclusion into the actual downlink streams via the SCC OS/Executive. The Collect SCC Telemetry software accepts ground commands defining the contents of the telemetry collection table.

1.8.2.9 Responsible Ground Element: EOC Last Revised 31–mar–1993

The EOC shall be capable of providing a star catalog and star catalog updates to the spacecraft. When processing SSST measurements, an on–board stored star catalog is used to determine measurement updates. The EOS mission requires the storage of information on no more than 700 stars. The Update Filter software provides precession computations (due to Earth rotation axis precision) on the star catalog stellar positions in order to avoid frequent uplinking of updated star catalogs. When processing the FSS measurements, solar ephemeris is used to determine measurement updates. Covariance matrix a priori and a posteriori updates are executed by the Update Filter software. Star Identification Processing performs four tests on identified stars to determine the integrity of the identification: multiple star test, star intensity test, covariance test, and a star angle test. The outputs of the Update Filter are the three small angle attitude knowledge corrections and the three IRU gyro bias knowledge corrections

1.8.2.10 Responsible Ground Element: EOC Last Revised 31–mar–1993

The EOC shall be capable of uplinking TDRS ephemerides, EOS–AM ephemeris, and a TDRS tracking schedule to the spacecraft. High Gain Antenna Control software determines the HGA azimuth and elevation rotation angles required to point the HGA towards the selected TDRSS. Rate commands are generated to rotate the HGA. HGA Guidance software processes TDRSS ephemerides and tracking schedule, EOS ephemeris, HGA gimbal angles, and estimated attitude to determine HGA gimbal angles required to rotate the HGA towards the TDRSS. The HGA Mode Controller function controls HGA mode sequencing. The HGA Controller function; monitors the HGA position and assures that motion constraints are honored; monitors the HGA position and provides notification when the HGA points in a direction where RF emissions are prohibited; applies rate and acceleration limits as required to minimize disturbances; generates the rate commands to rotate the HGA; and calculates the feedforward disturbance torque that results from the commanded HGA motion.

1.8.2.11 Responsible Ground Element: EOC Last Revised 31–mar–1993

The EOC shall be capable of controlling the solar array slew by ground command. The Solar Array Drive Control software calculates the SAD command to rotate the solar array to the desired sun pointing position. The Solar Array Drive Control software processes the solar array potentiometer data, solar ephemeris and inertial attitude to command the solar array. The solar array is commanded either with a constant rate uplinked from the ground or calculates the rate command. Ground commanded solar array slews are supported

1.8.2.12 Responsible Ground Element: EOC Last Revised 31–mar–1993

The EOC shall be capable of defining and modifying the actions to be taken as a result of an FDIR detected fault. ADAC FDIR software monitors the status of the GN&C software and hardware. If a failure in hardware is detected, commands to change to any redundant hardware are issued and any mode change commands are generated following the system level fault detection, isolation and recovery philosophy. In the event of a detected software anomaly, commands to switch to any backup mode are generated and the proper action is taken following the system level fault detection, isolation and recovery philosophy. Ground commands are accepted which can define the actions to be taken in the event of any detected faults.

1.8.2.13 Responsible Ground Element: EOC Last Revised 31–mar–1993

The EOC shall issue commands in accordance with CCSDS COP–1 protocol. The CTIU Firmware will control means by which the CTIU will receive commands and data from the Communication Equipment (CE), validate these commands per Consultative Committee for Space Data Systems (CCSDS) Command Operations Procedure 1 (COP–1) protocol and route them to the intended RT destination over the C&T bus. Commands designated for the CTIU will be processed internally and control the CTIU Firmware processing. Hardware discrete commands destined for the C&DHS are distributed to the Discrete Command Decoder for execution

1.8.3.1 Responsible Ground Element: EOC Last Revised 31–mar–1993

EOC shall verify proper execution of all commands executed internally by the FSWS. Execution status is made available in Spacecraft housekeeping telemetry. Also available in Spacecraft housekeeping telemetry is the status of all software processes such as all closed loop control software and navigation

1.8.6.1 Responsible Ground Element: EOC Last Revised 31–mar–1993

EOC shall send clock adjust commands and clock bias estimate commands. The Flight Software accepts and implements clock adjust commands and Spacecraft Clock bias estimate commands from the ground. Clock adjust commands are implemented by commanding the CTIU to adjust the Spacecraft Clock and commanding the TONS software to adjust the estimated Spacecraft Clock error. Spacecraft Clock bias estimate commands are relayed to the GN&C Navigation software for execution via the Command Processing Software. A record of the latest commanded bias value is retained. The Spacecraft Clock error estimates are provided to Ancillary Data Control software for inclusion in ancillary data. Normally these are samples of the GN&C Navigation Spacecraft Clock error estimates. When GN&C Navigation is offline for any reason, the latest retained commanded bias value is provided. For SCC flight software applications which need the Time Of Day (TOD), the Clock Management Software provides a software local clock which is based on the C&T bus major and minor cycle counts and on the C&T bus time distribution messages. The TOD is maintained and propagated in CCSDS day segmented form and made available to all SCC software applications

1.9.1.1 Responsible Ground Element: EOC Last Revised 31–mar–1993

The EOS Operations Center (EOC) shall be the focal point for on–orbit operations. The contractor Flight Operations Team (FOT) will plan and coordinate all activities necessary to achieve mission objectives. All commanding, processing, and displaying of housekeeping data for control and analysis of the spacecraft will be performed in this facility.

1.9.1.2 Responsible Ground Element: EOC Last Revised 31–mar–1993

EOC shall provide a common area with operator consoles to accommodate six personnel for use in controlling and monitoring the activity of the EOS–AM spacecraft. The consoles shall provide CRT/Keyboard access to the real–time analysis capability, spacecraft commanding and verification capability (restricted access), real–time data display, planning and scheduling information, spacecraft simulator, and an electronic mail capability

1.9.1.3 Responsible Ground Element: EOC Last Revised 31–mar–1993

EOC shall provide an off–line area with work stations to accommodate ten sustaining engineering personnel. The workstations shall provide access to the real–time analysis system, off–line analysis system, planning and scheduling information, and an electronic mail capability.

1.9.1.4 Responsible Ground Element: EOC Last Revised 31–mar–1993

EOC shall provide an area with work stations to accommodate five planner/scheduler personnel. The work stations shall provide access to planning and scheduling tools and information, and an electronic mail capability.

1.9.1.5 Responsible Ground Element: EOC Last Revised 31–mar–1993

During launch and activation of EOS–AM, twelve (TBR) temporary consoles shall be provided for use by the spacecraft contractor engineering personnel. The consoles shall provide CRT/keyboard access to the EOC real–time analysis capability, real–time data display, planning and scheduling information, and an electronic mail capability.

1.9.1.6 Responsible Ground Element: EOC Last Revised 31–mar–1993

EOC shall maintain a seven day record of EOS–AM operations history data which includes the schedule, command and command verification information, alarms and limit violations, and operator actions. The record will be provided to the GSFC DAAC for permanent storage.

1.9.1.7 Responsible Ground Element: EOC Last Revised 31–mar–1993

EOC shall provide analysis software to perform evaluation of real–time spacecraft Housekeeping and/or Health and Safety data. The analysis will include comparison of spacecraft telemetry values to limit values which are maintained in the EOC. The analysis shall also compare the telemetered spacecraft configuration to a configuration model (containing the predicted spacecraft configuration) which is maintained by the analysis system. Results of the evaluation shall be displayed on CRTs and printed reports at the EOC.

1.9.1.8 Responsible Ground Element: EOC Last Revised 31–mar–1993

Interactive access to the real–time analysis system shall be provided at the EOC to allow temporary analysis algorithms to be added. The EOC real–time analysis software shall accommodate the use of relational and/or algebraic expression in algorithms designed for data evaluation.

1.9.1.9 Responsible Ground Element: EOC Last Revised 31–mar–1993

EOC shall provide an off–line analysis system to perform evaluation of spacecraft Housekeeping and/or Health and Safety data. Evaluation will be for the purpose of anomaly resolution, performance assessment, trending, and reporting. The off–line analysis will be performed on selected data which has been recovered from the spacecraft recorder and transmitted to EOC by the GSFC DAAC at 256 kbps rate.

1.9.1.10 Responsible Ground Element: EOC Last Revised 31–mar–1993

The EOC shall host, distribute, and configuration manage the EOS–AM Spacecraft Data Base. The SDB will include information transferred from the S/C Contractor and information developed and maintained at EOC. The SDB shall contain information such as telemetry formats, calibration curves, command verification procedures, display formats, and automated operations procedures.

1.9.1.11 Responsible Ground Element: EOC Last Revised 31–mar–1993

The EOC off–line analysis system shall host commercial–off–the–shelf engineering tools such as; TRASYS and SINDA for thermal analysis and PV–WAVE for general purpose analysis.

1.9.1.12 Responsible Ground Element: EOC Last Revised 31–mar–1993

The EOC Planning and Scheduling System shall provide interface with other ground elements to collect and convert data for spacecraft use (e.g., translate FDF supplied ephemerides for uplink)

1.9.1.13 Responsible Ground Element: EOC Last Revised 31–mar–1993

The EOC off–line analysis system shall provide the following EOS–AM specific analysis tools:
MOMENTUM PREDICTION – Predict momentum buildup and anticipate wheel unloading.
MASS PROPERTIES DETERMINATION – update for each mission phase.
RESIDUAL PROPELLENT DETERMINATION – Periodically calculate the amount of fuel remaining onboard the S/C.
POWER ANALYSIS – Calculate solar array efficiency and battery performance and compare with expected values. Determine energy balance. Evaluate load effects on the system and forecast available power.
THERMAL ANALYSIS – Depict load profile and orbital effects, assess equipment performance, and perform thermal load balance analyses.

1.9.1.14 Responsible Ground Element: EOC Last Revised 31–mar–1993

EOC shall provide a spacecraft simulator to be used for operator training, compatibility testing, operations support, and mission planning support. The simulator shall provide correctly formatted Housekeeping and/or Health and Safety data and provide the correct telemetry response to spacecraft commands. The simulator shall be capable of interface with the EOC real–time system, off–line analysis system, Planning and Scheduling System, and with EDOS via ECOM links.

1.9.1.15 Responsible Ground Element: EOC Last Revised 31–mar–1993

The EOC simulator shall support development and validation of spacecraft command procedures and table–loads for normal and contingency operations.

1.9.1.16 Responsible Ground Element: EOC Last Revised 31–mar–1993

The EOC simulator, to support anomaly resolution, shall have the ability to establish a spacecraft state, duplicate pertinent operations while injecting failures, monitor results, and compare with expected data.

1.9.1.17 Responsible Ground Element: EOC Last Revised 31–mar–1993

The EOC simulator, to assist mission planning timelines, shall support simulation to verify resource and timing compatibility of planned operations.

1.9.2.1 Responsible Ground Element: EOC Last Revised 31–mar–1993

Relative time command sequences allocated for operation of the spacecraft shall be managed by the EOC Planning and Scheduling System. The sequences will be entered and maintained through the interactive capability of the system terminals. The RTSs will be transferred to the on–line command system as a load file when an update is warranted. This load file will be the source for uplinking the RTS to the spacecraft SCC.

1.9.2.2 Responsible Ground Element: EOC Last Revised 31–mar–1993

Spacecraft commands that are considered to warrant an extra step in the command transmission process shall be considered as "hazardous", by EOC

1.9.2.3 Responsible Ground Element: EOC Last Revised 31–mar–1993

All EOC–generated real–time commands shall be checked against the command database to determine if they are Hazardous commands. Hazardous real–time commands shall require a separate interactive entry before transmission. The command mode will pause at the entry, indicate that the command is hazardous, and will not continue until the ALLOW directive is entered or a CANCEL directive is issued

1.9.2.4 Responsible Ground Element: EOC Last Revised 31–mar–1993

The spacecraft commands that comprise a stored–command load shall be checked against the command database to determine if they are Hazardous commands. This shall occur as the load is being structured for transmission by the EOC command generation system. The transmission process will pause when a hazardous command(s) is detected in the command block buffer and an ALLOW directive must be entered in order to proceed with the stored command loading process.

1.9.2.5 Responsible Ground Element: EOC Last Revised 02–jul–1993

All spacecraft commands formatted for transmission shall be checked against the hazardous command definition list to assure that no hazardous commands are inadvertently output from EOC. The hazardous command search should be effected using the command binary pattern to ensure that no inadvertently defined structure will escape detection.

1.9.5.1 Responsible Ground Element: EOC Last Revised 31–mar–1993

Ground Control Message Requests (GCMRs) shall be transmitted to the NCC by EOC for controlling remote site ground facilities. A capability shall exist to allow the EOC operator to generate GCMRs and to specify the variable data items within the the GCMR for subsequent transmission to the NCC. A capability shall be provided to display the GCMR messages and edit the content prior to transmission to the NCC. The GCMRs shall include those required for operation, such as the following:

- Doppler Compensation Inhibit Request (DCI)
- Expanded User Frequency Uncertainty Request (EUFU)
- Forward Link EIRP Reconfiguration Request (FLER)
- Forward Link Sweep Request (FLS)
- MA Forward link Reconfiguration Request (MFLR)
- MA Return Link Reconfiguration Request (MRLR)
- SSA Forward Link Reconfiguration Request (SFLR)
- SSA Return Link Reconfiguration Request (SRLR)
- User Reacquisition Request (URR)
- Terminate Event Request (TER)

@@@@

1.9.5.2 Responsible Ground Element: EOC Last Revised 31–mar–1993

In the event of conflict between the NCC generated schedule and the spacecraft science or navigation requirements, the EOC shall work with the NCC and FDF to resolve schedule conflicts. Conflict resolution will include identification of alternate contact periods based on the recommendations of the FDF. Instrumenters will be informed in the event that TDRSS scheduled services do not meet spacecraft requirements.

1.9.5.3 Responsible Ground Element: EOC Last Revised 02–jul–1993

Ground measurements of the Spacecraft Clock error, via the User Spacecraft Clock Calibration System (USCCS), shall be scheduled once each day during communication or navigation tracking contacts to determine the spacecraft time bias estimate. No additional TDRSS contacts shall be required for Spacecraft Clock maintenance

2.4.4.1 Responsible Ground Element: FDF Last Revised 31–mar–1993

FDF shall generate TDRSS navigation contact requirements. Under normal conditions these requirements will consist of a request for 30 minutes of service per orbit either in single or multiple time blocks as necessary to meet the navigation requirements of the spacecraft. Additional 5 minute "navigation only" contacts will be identified as required to meet the 150m navigation accuracy requirement. The service requests will be provided to EOC.

2.4.4.2 Responsible Ground Element: FDF Last Revised 31–mar–1993

The FDF generated TDRSS service requests shall consider the frequency and duration of contacts needed to account for navigation requirements, time between contact periods, EOS/TDRS geometry and atmospheric conditions. In the event of poor EOS/TDRSS geometry, high atmospheric density or extended durations between contacts, 5 minute "navigation only" contacts shall be requested.

2.4.4.3 Responsible Ground Element: FDF Last Revised 31–mar–1993

The FDF generated TDRSS service requests shall identify the TDRS location (East or West) which maximizes the in–plane EOS Doppler observability. TDRS selection shall also consider the status of each TDRS with respect to orbit maintenance maneuvers and thruster angular momentum dumps.

2.4.4.4 Responsible Ground Element: FDF Last Revised 31–mar–1993

The FDF generated TDRSS service requests shall identify the location within the EOS orbit at which the contact is desired. Identification of this orbit location shall consider ionospheric refraction, line–of–site visibility, HGA position limits, HGA gimbal singularities (keyhole region), and known regions of high RFI.

2.4.4.5 Responsible Ground Element: FDF Last Revised 31–mar–1993

The FDF generated TDRSS service request shall consider the need to support rapid TONS filter convergence or return to science mode accuracy levels after performance of any spacecraft maneuver (launch ascent, drag makeup, inclination correction and thrusted attitude control and thrusted angular momentum dumps).

2.4.4.6 Responsible Ground Element: FDF Last Revised 31–mar–1993

Upon receipt of a NCC generated TDRSS schedule, the FDF shall evaluate the schedule with respect to TONS performance. This evaluation shall include estimation of TONS performance using a TONS covariance analysis program.

2.4.4.7 Responsible Ground Element: FDF Last Revised 31–mar–1993

FDF shall compute (and provide to EOC) the four TDRS position and velocity vectors, as often as once per day. The position and velocity shall be of sufficient accuracy and resolution such that a one–day fourth–order Runge–Kutta numerical integration with a 10.24 second time step; in a 48 bit 1750A word length processor; with a with a force model consisting of an [8 x 8] GEM–T3 geopotential, solar and lunar gravity, and solar pressure; will generate TDRS positions accurate to +150 meters (per axis, 3–sigma); and will generate TDRS velocities accurate to +0.011 meters/second (per axis, 3–sigma).

2.4.4.8 Responsible Ground Element: FDF Last Revised 31–mar–1993

FDF shall compute, and provide to EOC, EOS–AM spacecraft mass and center–of–mass after EOS propulsive maneuvers.

2.4.4.9 Responsible Ground Element: FDF Last Revised 31–mar–1993

FDF shall compute, and provide to EOC, an initial state vector and associated state error covariance matrix for the primary navigation system. Initial position and velocity accuracies are TBD.

2.4.4.10 Responsible Ground Element: FDF Last Revised 31–mar–1993

FDF shall provide warning of TDRS propulsive maneuvers, to EOC

2.4.4.11 Responsible Ground Element: FDF Last Revised 31–mar–1993

The FDF shall provide for initialization of the TONS data base and initialization of filter tuning parameters.

2.4.4.12 Responsible Ground Element: FDF Last Revised 31–mar–1993

The FDF shall accept actual TONS measurement and status telemetry, emulate the flight software, provide statistical analysis of measurement residuals, provide visibility into all intermediate computations and provide appropriate printed and plotted output.

2.4.4.13 Responsible Ground Element: FDF Last Revised 31–mar–1993

The FDF shall perform quality assurance of TONS performance via comparison of onboard and ground generated EOS state vectors. In the event of conflicts, the FDF shall recommend a switch to backup mode operations.

2.4.4.14 Responsible Ground Element: FDF Last Revised 31–mar–1993

The FDF shall emulate the TONS flight software or hardware, perform diagnostics and test proposed software and database parameter modifications. The FDF shall generate simulated measurements and simulated truth ephemerides and state vector elements.

2.4.4.15 Responsible Ground Element: FDF Last Revised 31–mar–1993

The FDF shall provide to EOC, a daily solar activity parameter to be used by the TONS software.

2.4.4.16 Responsible Ground Element: FDF Last Revised 31–mar–1993

The FDF shall predict the time for EOS–AM spacecraft orbit maintenance maneuvers, compute maneuver planning data (including start time and estimated burn times, required delta velocity, and spacecraft attitude) and determine maneuver execution accuracy.

2.4.4.17 Responsible Ground Element: FDF Last Revised 31–mar–1993

The FDF shall notify the EOC of the status of each TDRSS spacecraft with respect to orbit maneuvers and thruster angular momentum dumps.

2.4.4.18 Responsible Ground Element: FDF Last Revised 31–mar–1993

The FDF shall interface with the EOC for the transfer of all FDF generated data to the EOC and the receipt of all TONS related telemetry to the FDF.

2.4.4.19 Responsible Ground Element: FDF Last Revised 31–mar–1993

The FDF shall maintain an independent estimate of the spacecraft frequency error and supply this data to the EOC to support TONS time determination.

2.4.4.20 Responsible Ground Element: FDF Last Revised 31–mar–1993

The FDF shall compute (and provide to EOC) a backup EOS–AM state vector and mean orbital elements as often as once per 24 hours, and as necessary after EOS propulsive maneuvers. During the operational phase, position data shall be accurate to +50 kilometers after two days of onboard use, 3–sigma.

2.4.4.21 Responsible Ground Element: FDF Last Revised 31–mar–1993

The FDF shall compute (and provide to EOC) four (4) backup TDRS mean orbit elements as often as once per 24 hours, and as necessary after TDRS propulsive maneuvers. During the operational phase, position data shall be accurate to +120 kilometers after two days of onboard use, 3–sigma.

2.4.4.23 Responsible Ground Element: FDF Last Revised 31–mar–1993

FDF shall provide a star catalog and star catalog updates to EOC, when requested, for contingency use. The onboard algorithm is expected to maintain the onboard catalog for the life of the spacecraft.

4.4.4.1 Responsible Ground Element: NCC Last Revised 31–mar–1993

NCC shall provide weekly TDRSS schedules in response to EOC requests. The schedule will include TDRSS contact times, TDRS transmit frequency for each contact, and TDRSS ground antenna ID for each contact.

5.3.3.1 Responsible Ground Element: TDRSS Last Revised 31–mar–1993

EOS–AM shall normally communicate with the EOS ground elements via the TDRSS. Approximately 30 minutes of TDRSS S–Band support shall be required during each EOS–AM orbit. EOS–AM will carry the NASA standard S–Band transponder. The capabilities will be similar to the second generation TDRSS transponder with enhancements for TONS navigation capabilities and interfaces. The S–Band transponder/TDRSS interface is:

@@@@ TDRSS Service	Link Description	Max. Data Rate
SMA Forward	Low Rate Commands and Data	1 Kbps
SMA Return	Low Rate Telemetry	16 Kbps
SSA Forward	High Rate Commands and Data	10 Kbps
SSA Return	Medium Rate Telemetry	512 Kbps

Details of the EOS–AM communication subsystem operation is described in the "Communications Subsystem Specification for the EOS–AM Spacecraft (SP–401)". Operation of the transponder shall be as described in the "S–Band Transponder Specification (SP–402)".

5.3.3.2 Responsible Ground Element: TDRSS Last Revised 31–mar–1993

EOS–AM shall normally communicate with the EOS ground elements via the TDRSS. Approximately 30 minutes of TDRSS KSA return link support shall be required during each EOS–AM orbit. The required data rate will be 150 Mbps (75 Mbps on both the I and Q channels). Details of the EOS–AM communication subsystem operation is described in the "Communications Subsystem Specification for the EOS–AM Spacecraft (SP–401)".

5.3.3.3 Responsible Ground Element: TDRSS Last Revised 31–mar–1993

TDRS support of the EOS–AM spacecraft shall be as described in the EOS TDRSS ICD (GE ICD 20008504)

5.4.4.1 Responsible Ground Element: TDRSS Last Revised 31–mar–1993

The forward link TDRSS S–Band signal shall not be Doppler compensated while EOS is using the signal for navigation.

8.1.3.1 Responsible Ground Element: EDOS Last Revised 31–mar–1993

EDOS shall receive (via TDRSS, DSN, or DP station) all data transmitted by EOS–AM.

8.1.3.2 Responsible Ground Element: EDOS Last Revised 31–mar–1993

EDOS shall provide data processing and data delivery based on Virtual Channel ID (VCID), Application Packet ID (APID), and quick–look flag.

8.1.3.3 Responsible Ground Element: EDOS Last Revised 31–mar–1993

EDOS shall archive level–zero processed data.

8.3.2.1 Responsible Ground Element: EDOS Last Revised 31–mar–1993

EDOS shall generate any acquisition sequences and idle sequences necessary to enable EOS–AM to maintain lock on the command signal.

8.3.2.2 Responsible Ground Element: EDOS Last Revised 31–mar–1993

EDOS shall receive telecommand transfer frames from EOC and generate Command Link Transmission Units (CLTU)s for uplink via TDRSS or DSN/GN/WTS.

8.9.3.1 Responsible Ground Element: EDOS Last Revised 31–mar–1993

EDOS shall forward to the GSFC DAAC, all Housekeeping telemetry and Command Link Control Words received from the high–rate recorder playback on the Ku–band link.

11.9.5.1 Responsible Ground Element: DAAC Last Revised 31–mar–1993

The GSFC DAAC shall receive from EDOS, and permanently archive, all EOS–AM Housekeeping and Health and Safety data which is recovered from the spacecraft recorder. This includes the normal high–rate recorder playback via the Ku–band and also any non–redundant data received in 256 Kb or 512 Kb dumps via the s–band link.

11.9.5.2 Responsible Ground Element: DAAC Last Revised 31–mar–1993

The GSFC DAAC shall transmit selected Housekeeping and/or Health and Safety data from the archive to EOC, at 256 kbps, for off–line analysis.

11.9.5.3 Responsible Ground Element: DAAC Last Revised 31–mar–1993

DAAC shall maintain a permanent record of EOS–AM operations history data which includes the schedule, command and command verification information, alarms and limit violations, and operator actions. The record will be provided to the GSFC DAAC by EOC. The DAAC shall also maintain a permanent record of EOS–AM housekeeping telemetry for spacecraft analysis.

(Preliminary)
Instrument Secondary Structure Layouts

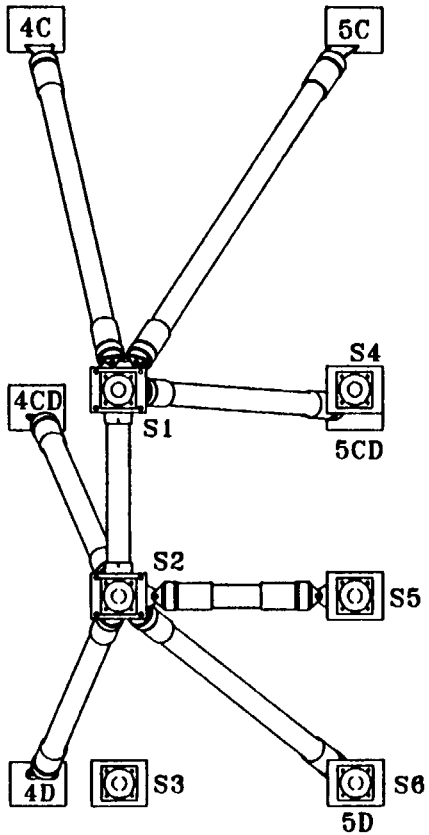

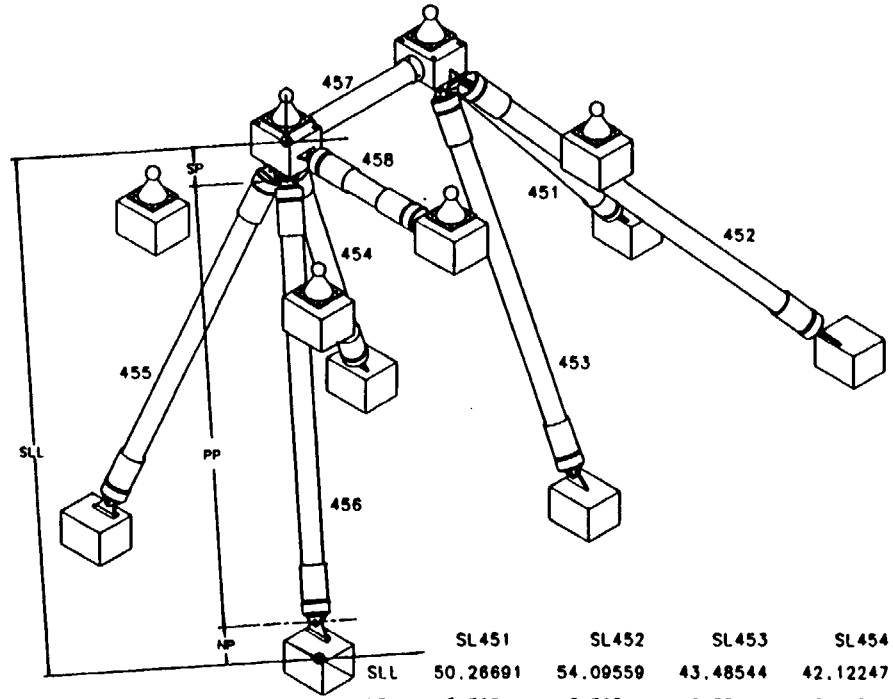

	SL451	SL452	SL453	SL454	SL455	SL456
SLL	50.26691	54.09559	43.48544	42.12247	42.13572	46.63678
NP	3.725	3.725	2.75	3.095	3.095	3.095
SP	3.725	3.725	2.75	3.095	3.095	3.095
PP	42.81691	46.64559	37.98544	35.93247	35.94572	40.44678

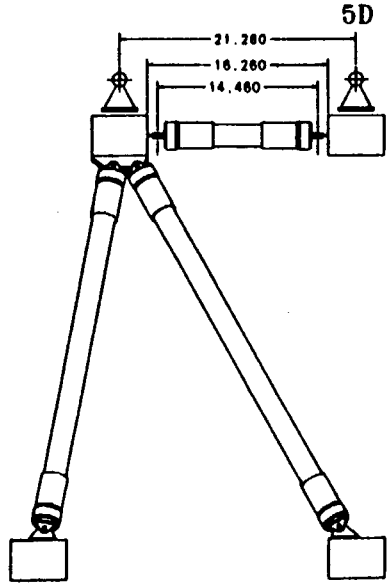

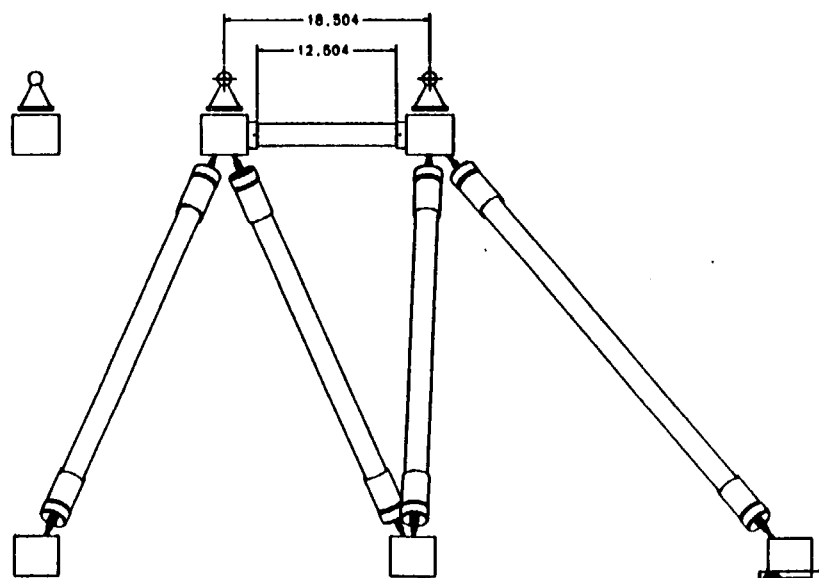

/home/rkoyros/swlr/swlr-lo-full.dwg •20 May 1993•

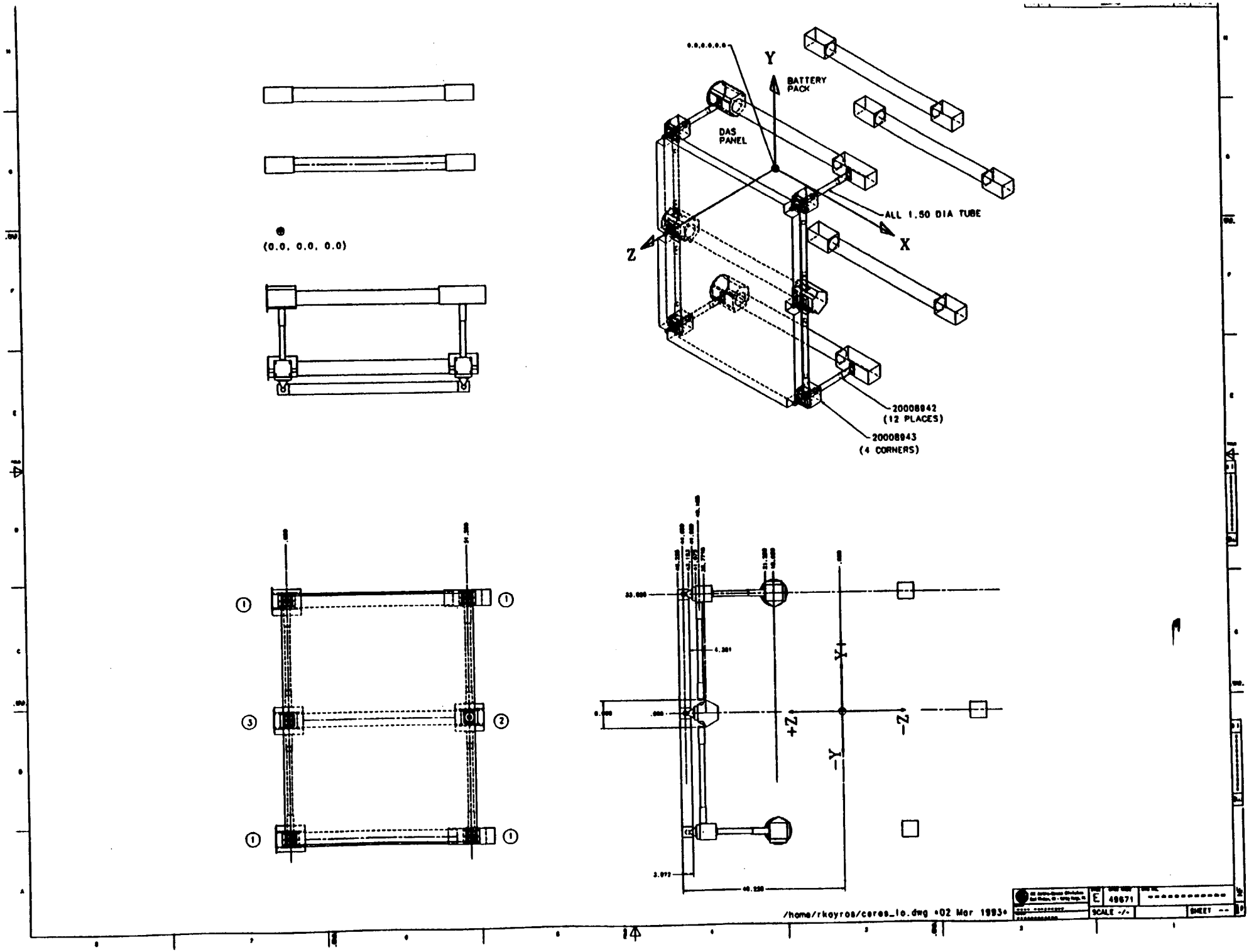
(0.0, 0.0, 0.0)
Y
BATTERY PACK
DAS PANEL
ALL 1.50 DIA TUBE
X
Z
20008942
(12 PLACES)
20008943
(4 CORNERS)
+Z
-Z
+Y
-Y
/home/rkoyros/ceres_lo.dwg *02 Mar 1993*
E
49671
SCALE -/-
SHEET --

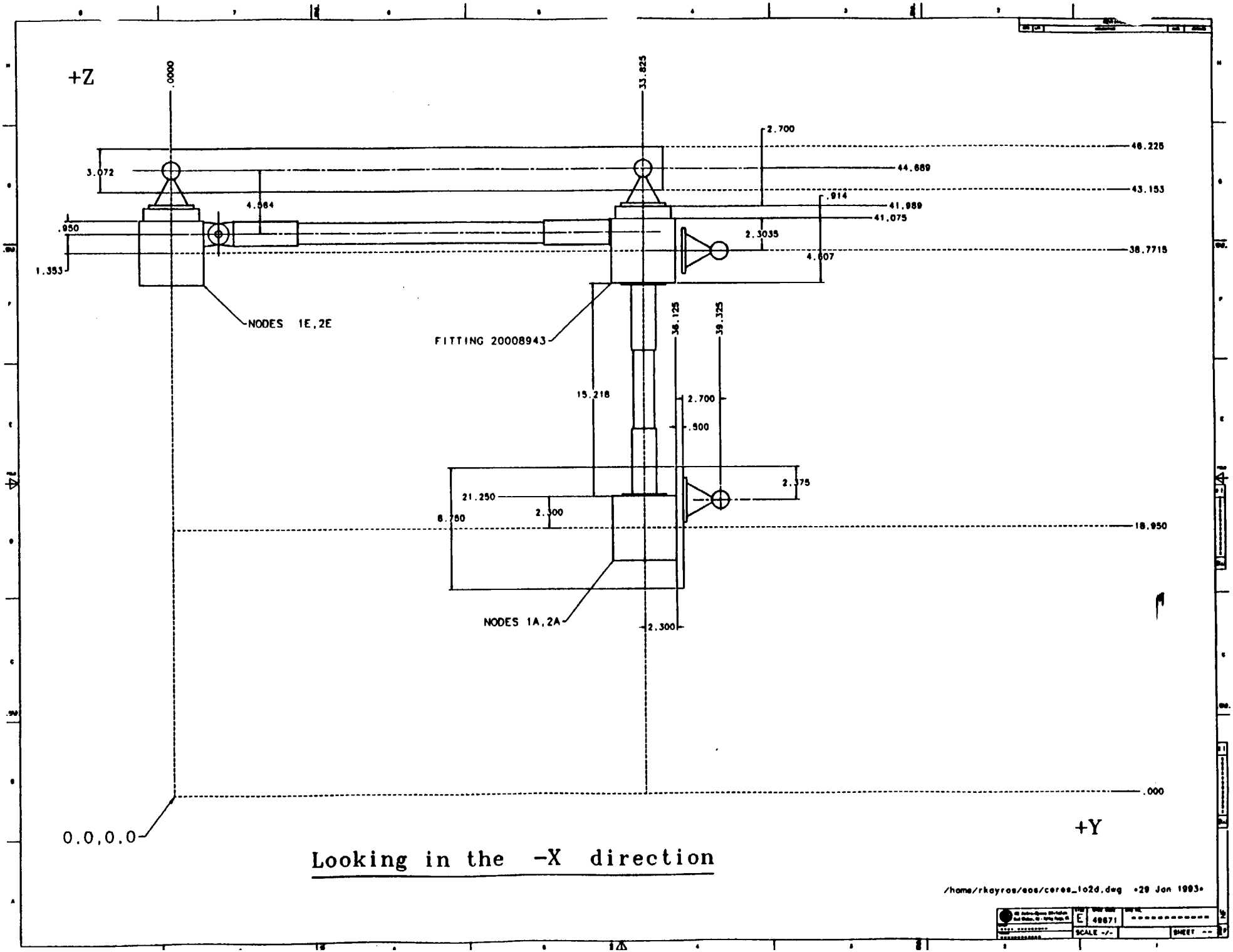
+Z
.0000
33.825
2.700
48.225
3.072
44.669
43.153
.914
41.989
41.075
4.564
.950
2.3035
38.7715
1.353
4.607
NODES 1E,2E
FITTING 20008943
36.125
39.325
15.218
2.700
.500
2.375
21.250
2.300
8.750
18.950
NODES 1A,2A
2.300
.000
0.0,0.0
+Y
Looking in the -X direction
/home/rkayros/eos/ceres_lo2d.deg •29 Jan 1993•
E
49671
SCALE -/-
SHEET --

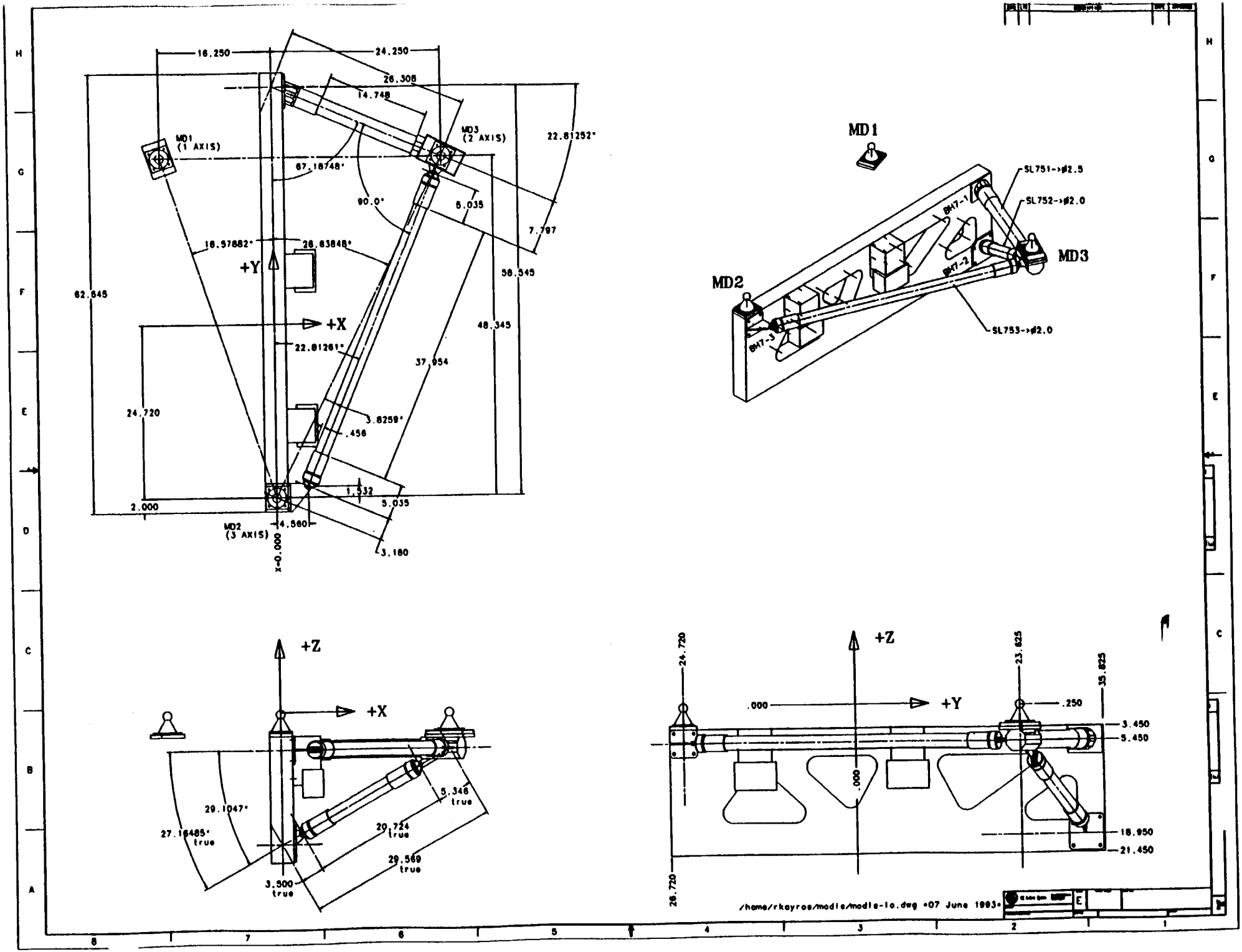
16.250
24.250
26.306
14.748
MD1
(1 AXIS)
MD3
(2 AXIS)
22.81252°
67.18748°
90.0°
6.035
7.797
16.57882°
26.63848°
+Y
+X
62.645
58.545
48.345
22.81261°
37.954
24.720
3.8259°
.456
1.532
5.035
2.000
MD2
(3 AXIS)
4.560
x-0.000
3.160
MD1
MD2
MD3
SL751->ø2.5
SL752->ø2.0
SL753->ø2.0
BH7-1
BH7-2
BH7-3
+Z
+X
29.1047°
27.16485°
true
5.348
true
20.724
true
29.569
true
3.500
true
+Z
+Y
24.720
23.625
35.825
.000
.250
3.450
5.450
.000
18.950
21.450
26.720
/home/rkayros/modls/modls-lo.dwg •07 June 1993•

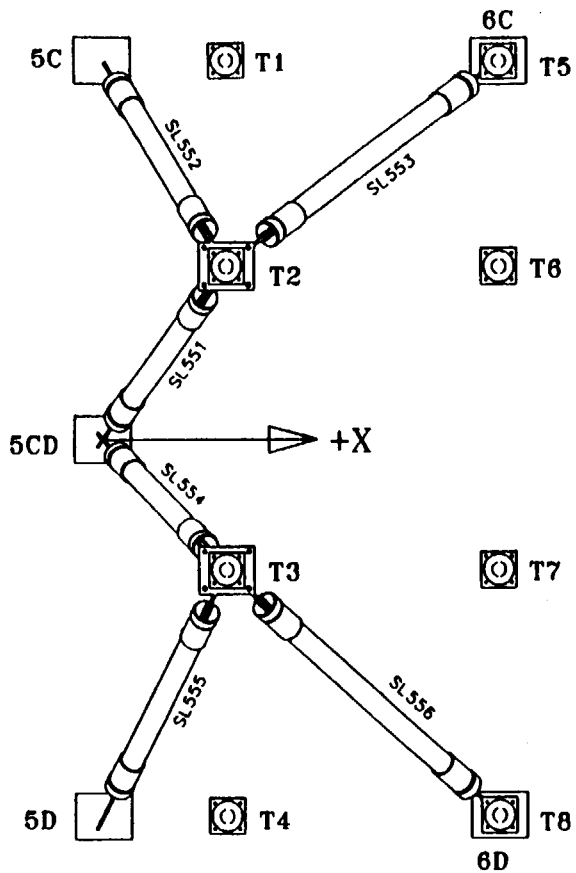

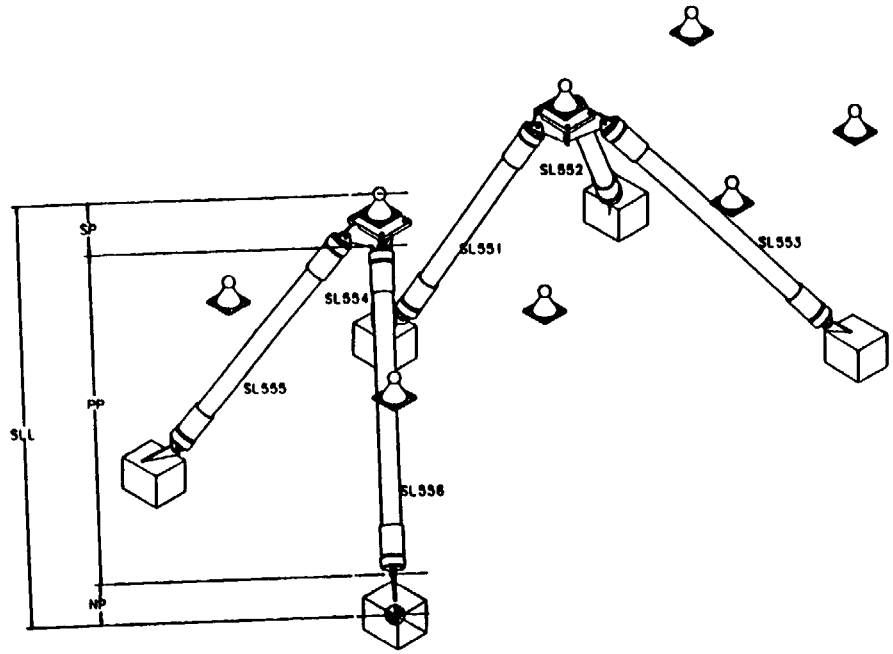

	SL551	SL552	SL553	SL554	SL555	SL556
SLL	35.54312	36.87111	42.79257	34.09079	38.84834	44.50751
NP	3.442	3.571	4.144	3.302	3.762	4.311
SP	5.456	5.660	5.842	5.234	5.762	5.442
PP	26.78497	27.63977	32.8065	25.55559	29.32435	34.75517

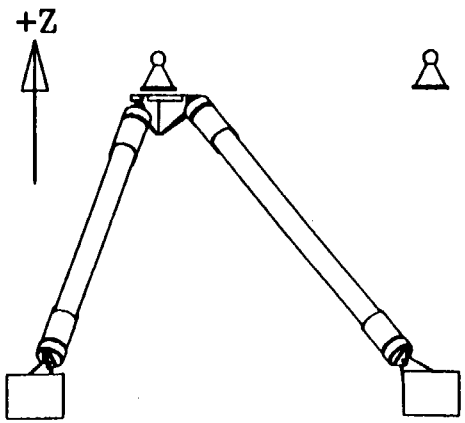

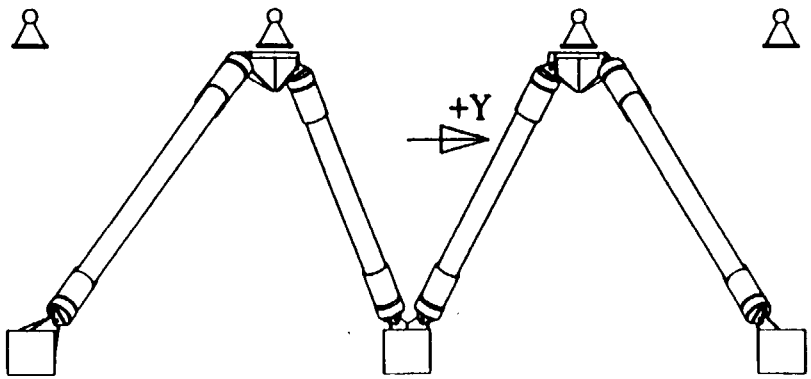

/home/rkoyros/lir/llr-tube-lo.dwg +02 June 1993

SDRC I-DEAS VI.i(s): Solid_Modeling

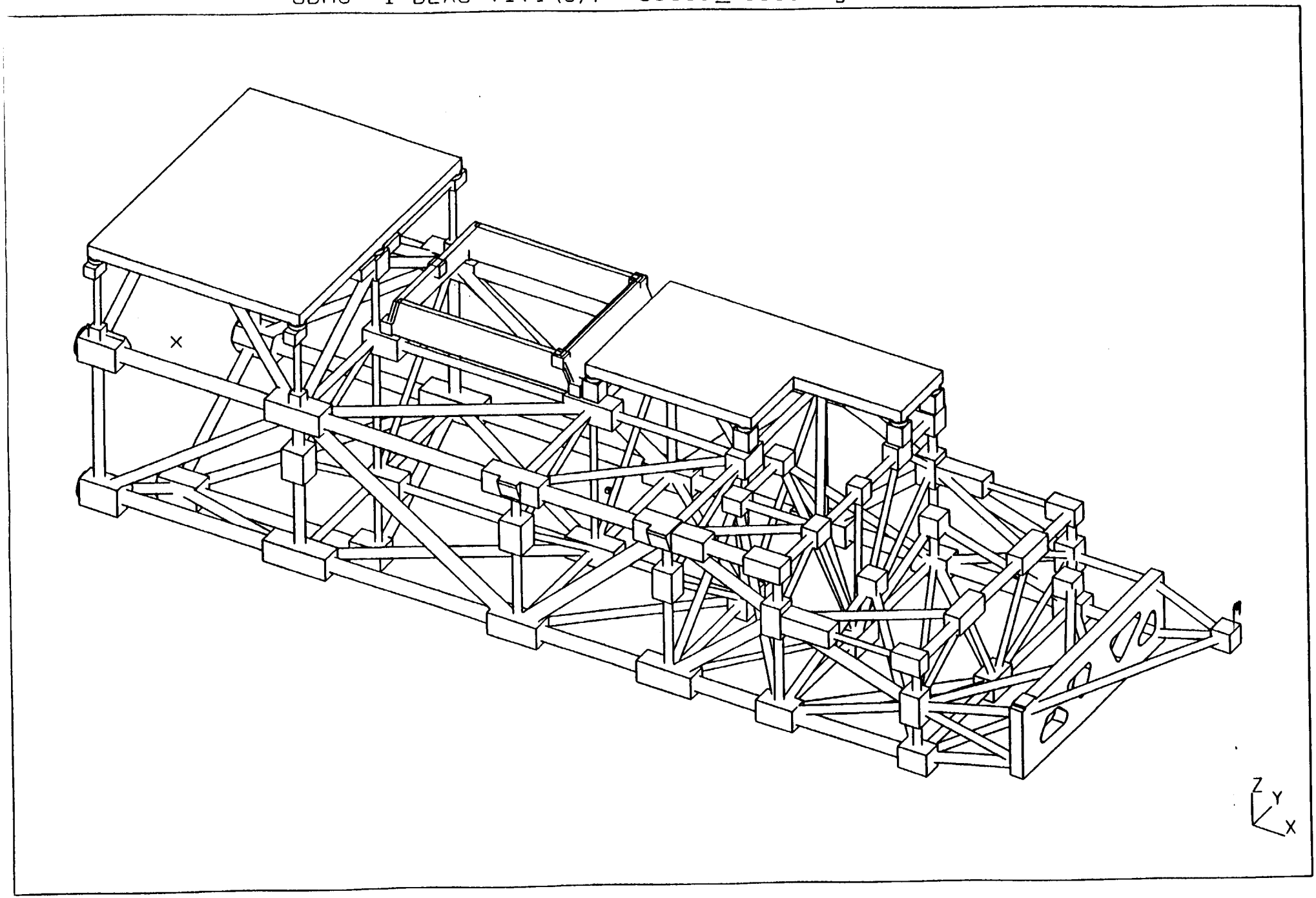

SDRC I-DEAS VI.i(s): Solid_Modeling

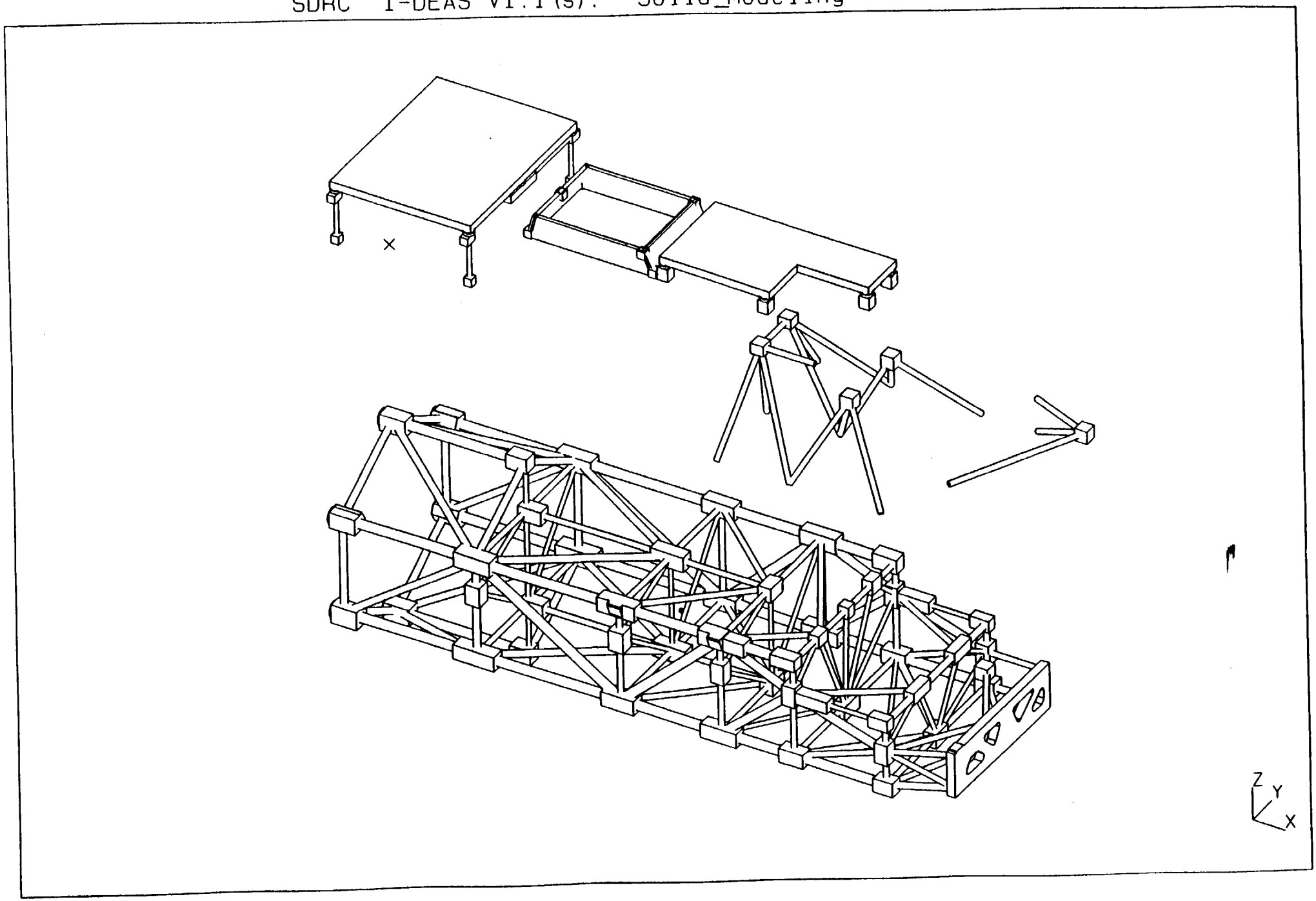

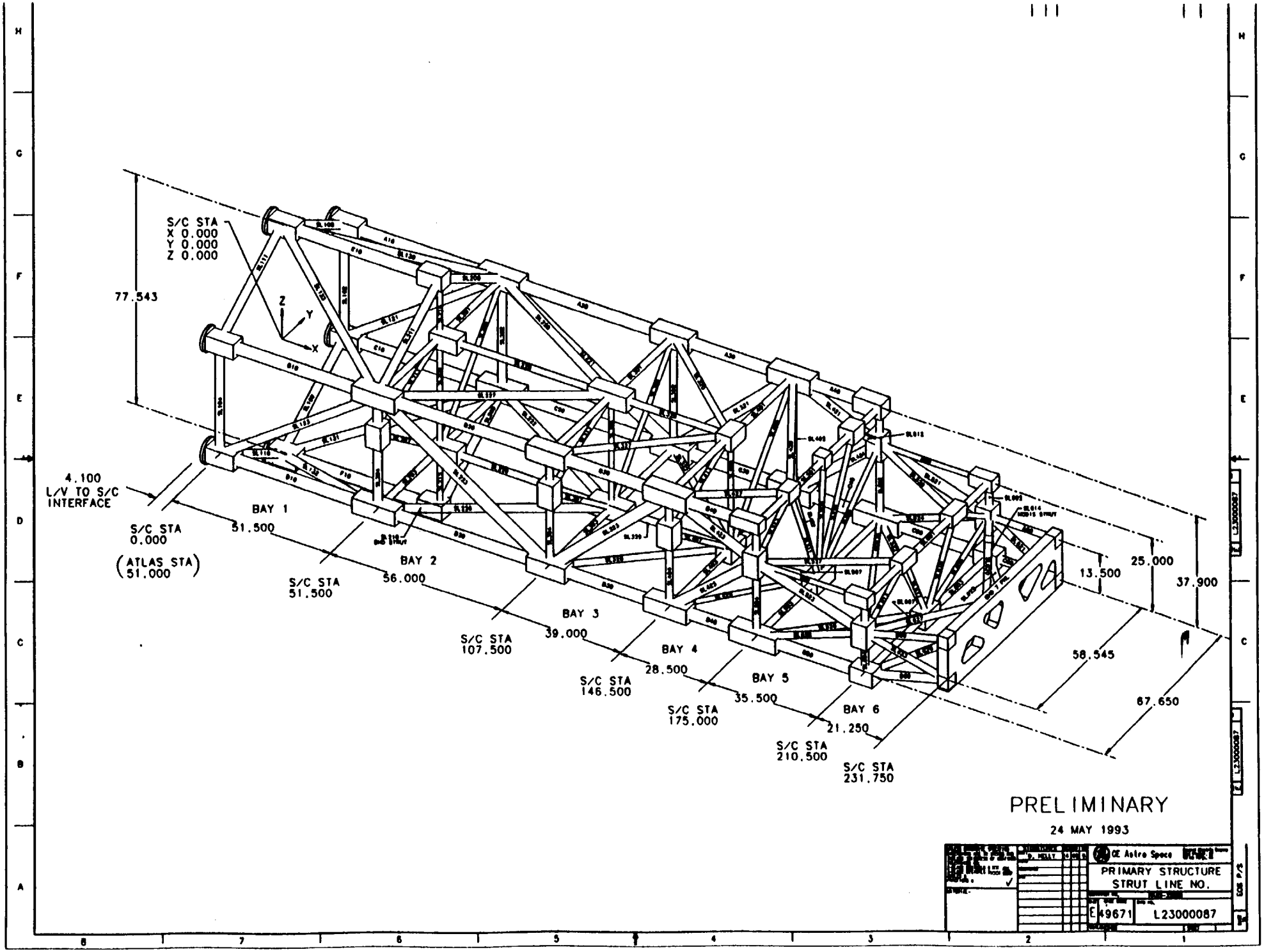
S/C STA
X 0.000
Y 0.000
Z 0.000
77.543
Z
Y
X
4.100
L/V TO S/C
INTERFACE
S/C STA
0.000
(ATLAS STA
51.000)
BAY 1
51.500
S/C STA
51.500
BAY 2
56.000
S/C STA
107.500
BAY 3
39.000
S/C STA
146.500
BAY 4
28.500
S/C STA
175.000
BAY 5
35.500
S/C STA
210.500
BAY 6
21.250
S/C STA
231.750
13.500
25.000
37.900
58.545
67.650
PRELIMINARY
24 MAY 1993
GE Astro Space
PRIMARY STRUCTURE
STRUT LINE NO.
E 49671
L23000087

(Preliminary)
CPHTS Plumbing Layouts

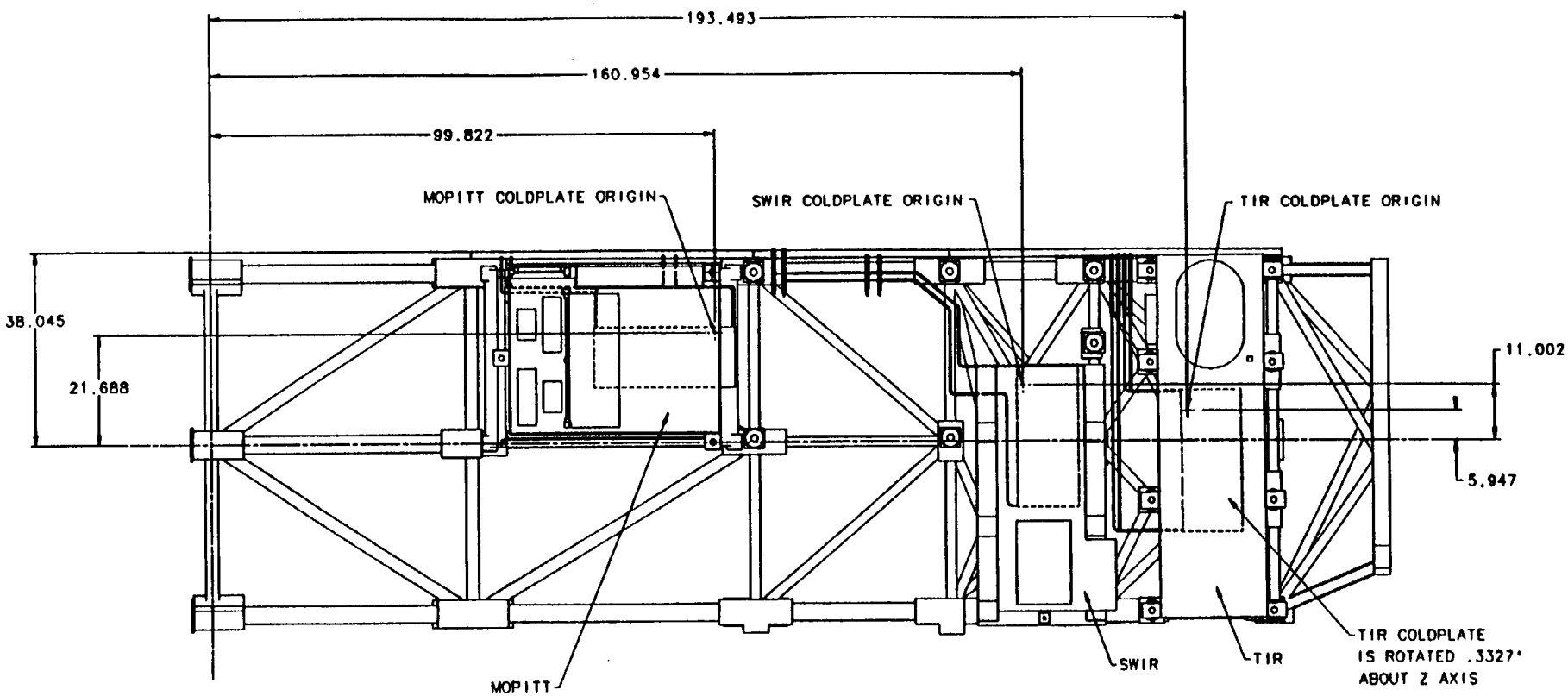

VSR PLATE REMOVED
TO SHOW SWIR PLUMBING

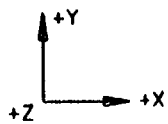

COLDPLATE LOCATIONS
RELATIVE TO S/C ORIGIN

	X	Y	Z
TIR	193.493	5.947	10.528
SWIR	160.954	11.002	22.708
MOPITT	99.822	21.688	33.075

GE Astro Space

PLUMBING LAYOUT
+Y VIEW

E 49671 PLUMBZ

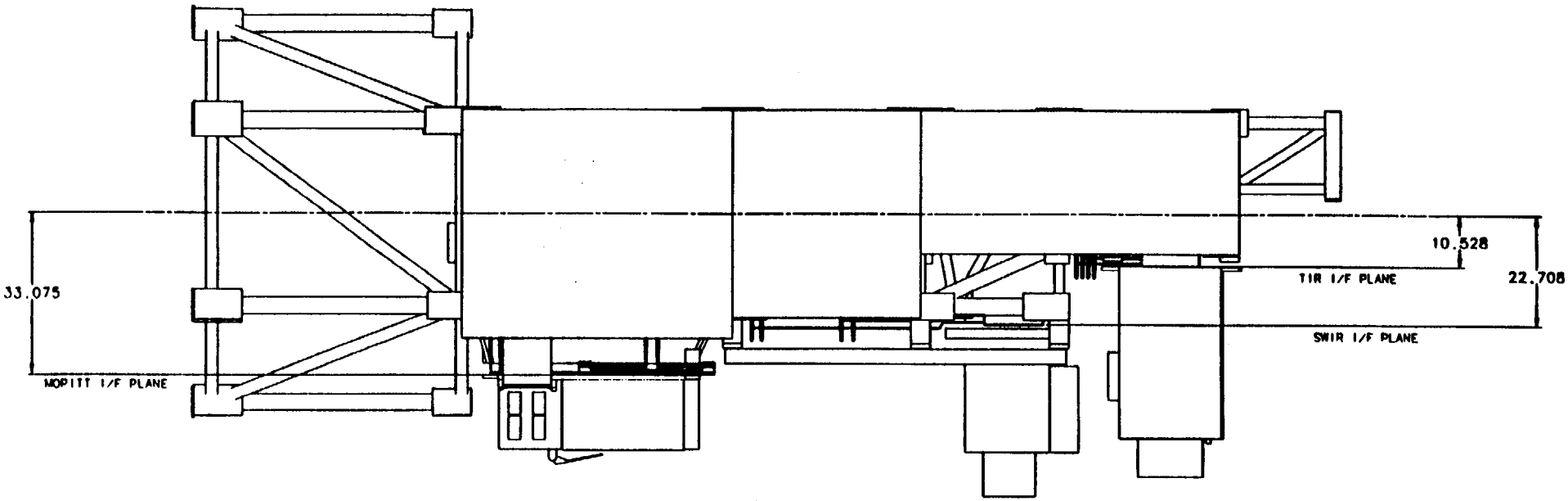

COLDPLATE LOCATIONS
RELATIVE TO S/C ORIGIN

	X	Y	Z
TIR	193.493	5.947	10.528
SWIR	160.954	11.002	22.708
MOPITT	99.822	21.686	33.075

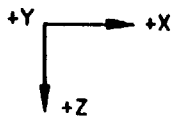

GE Astro Space

PLUMBING LAYOUT
+Y VIEW

E 48671 PLUMBY

SCALE 1/8 SHEET 1 of --

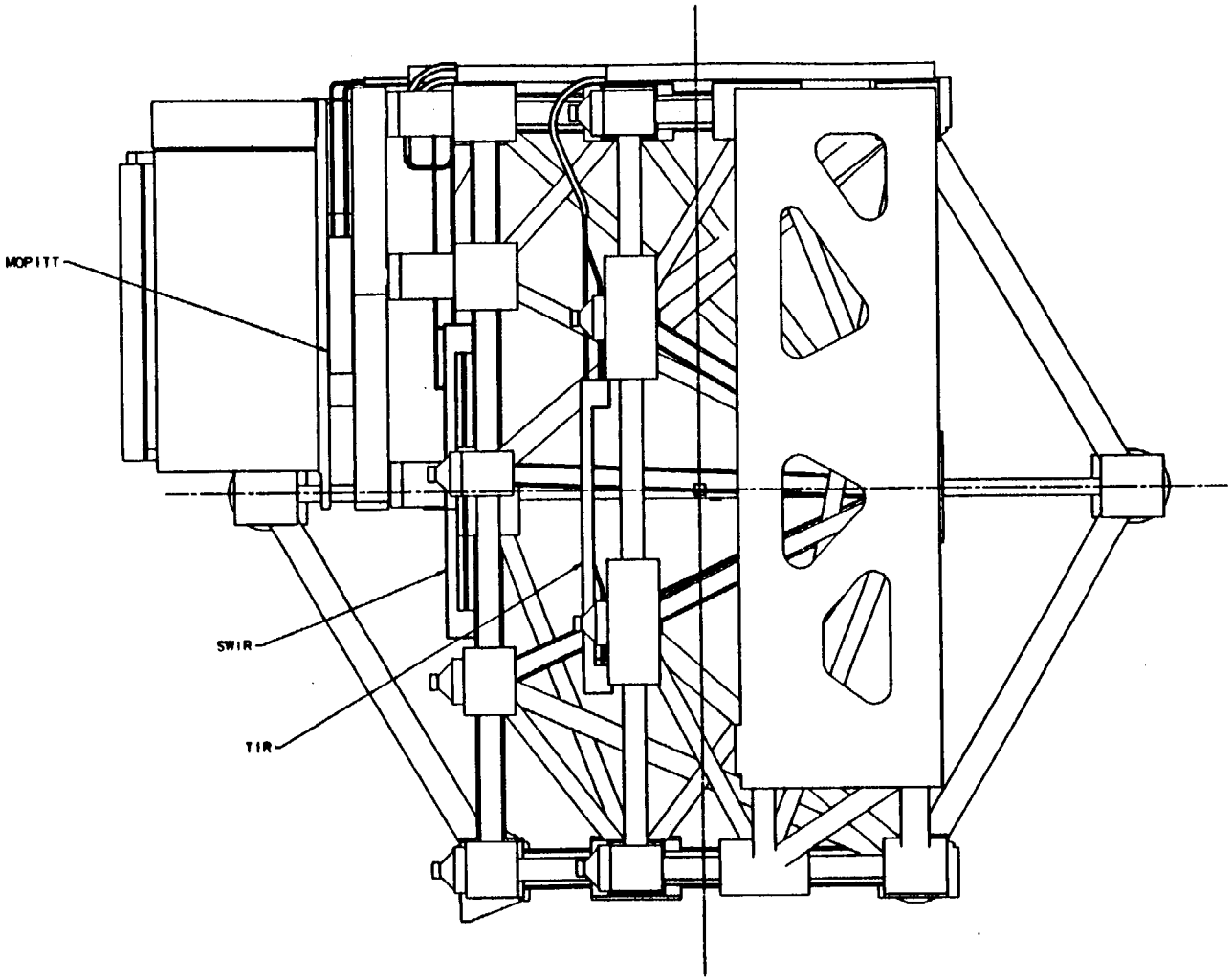

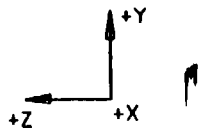

SWIR & TIR REMOVED
TO SHOW PLUMBING

COLDPLATE LOCATIONS
RELATIVE TO S/C ORIGIN

	X	Y	Z
TIR	193.493	5.947	10.528
SWIR	160.954	11.002	22.708
MOPITT	99.822	21.688	33.075

GE Astro Space

PLUMBING LAYOUT
+X VIEW

E | 49671 | PLUMBX

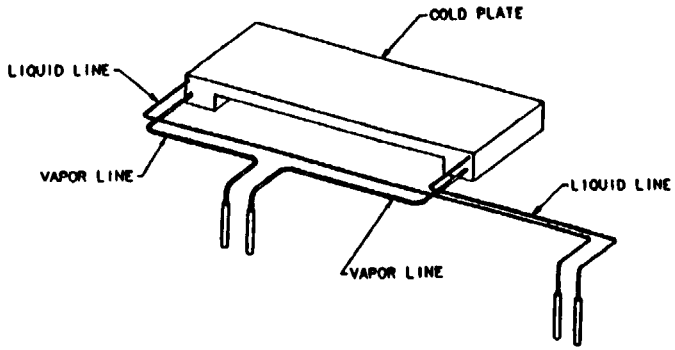

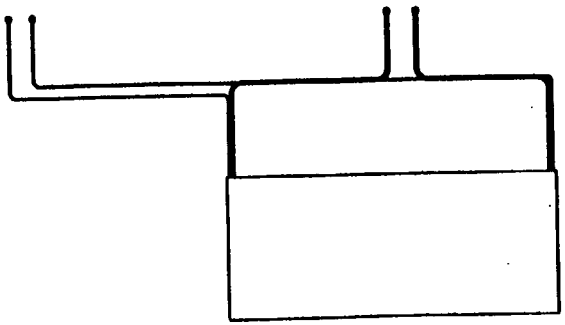

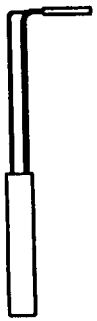

GE Astro Space

MOPITT
PLUMBING

E 49671 MOPITT

SCALE 1/4 SHEET 1 of --

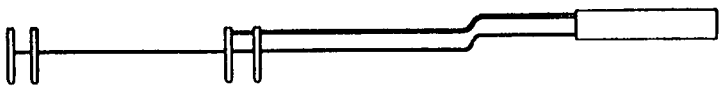

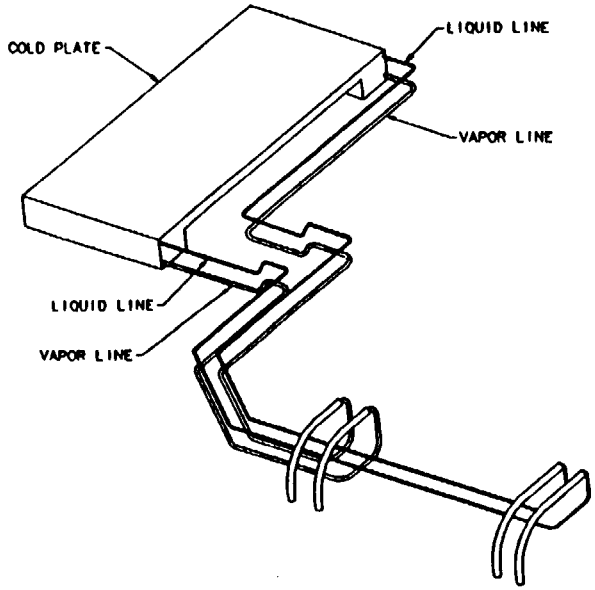

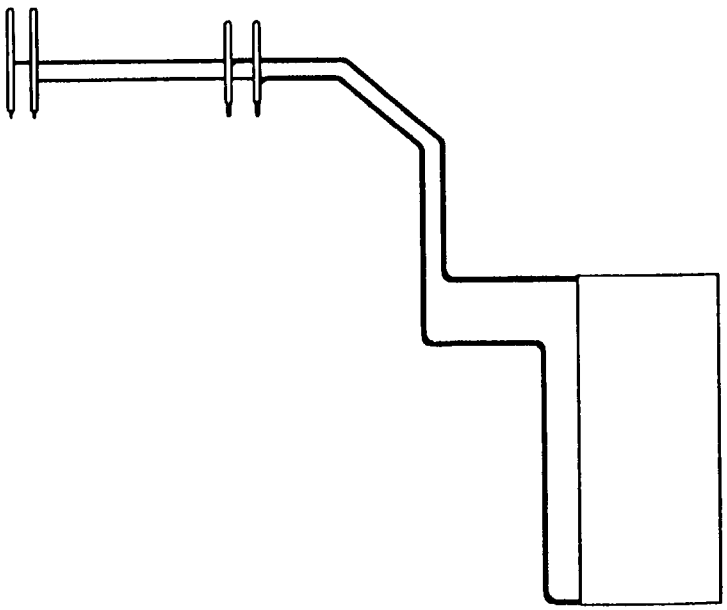

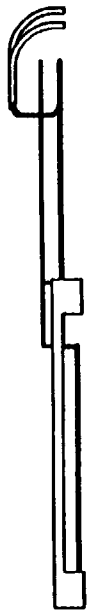

GE Astro Space

SWIR
PLUMBING

E 49671 SWIR

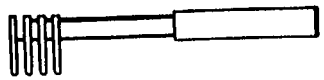

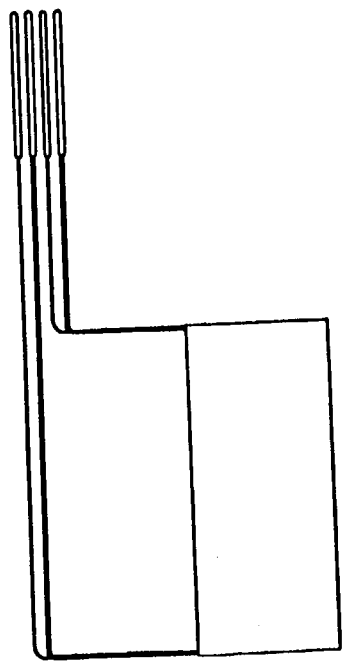

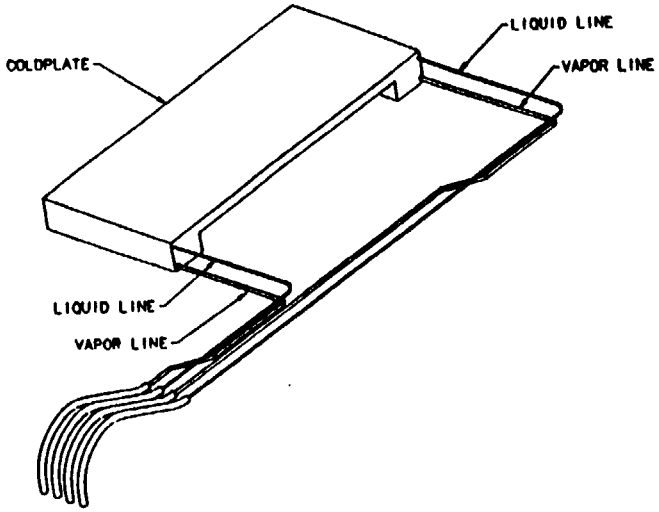

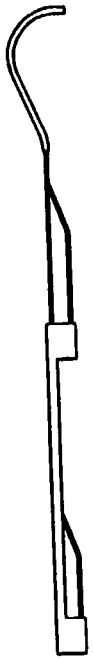

GE Astro Space

TIR
PLUMBING

E 49671

TIR

SCALE 1/4

SHEET 1 of --

(Preliminary)
High Gain Antenna MICD
Martin Marietta Dwg. No. 20001418

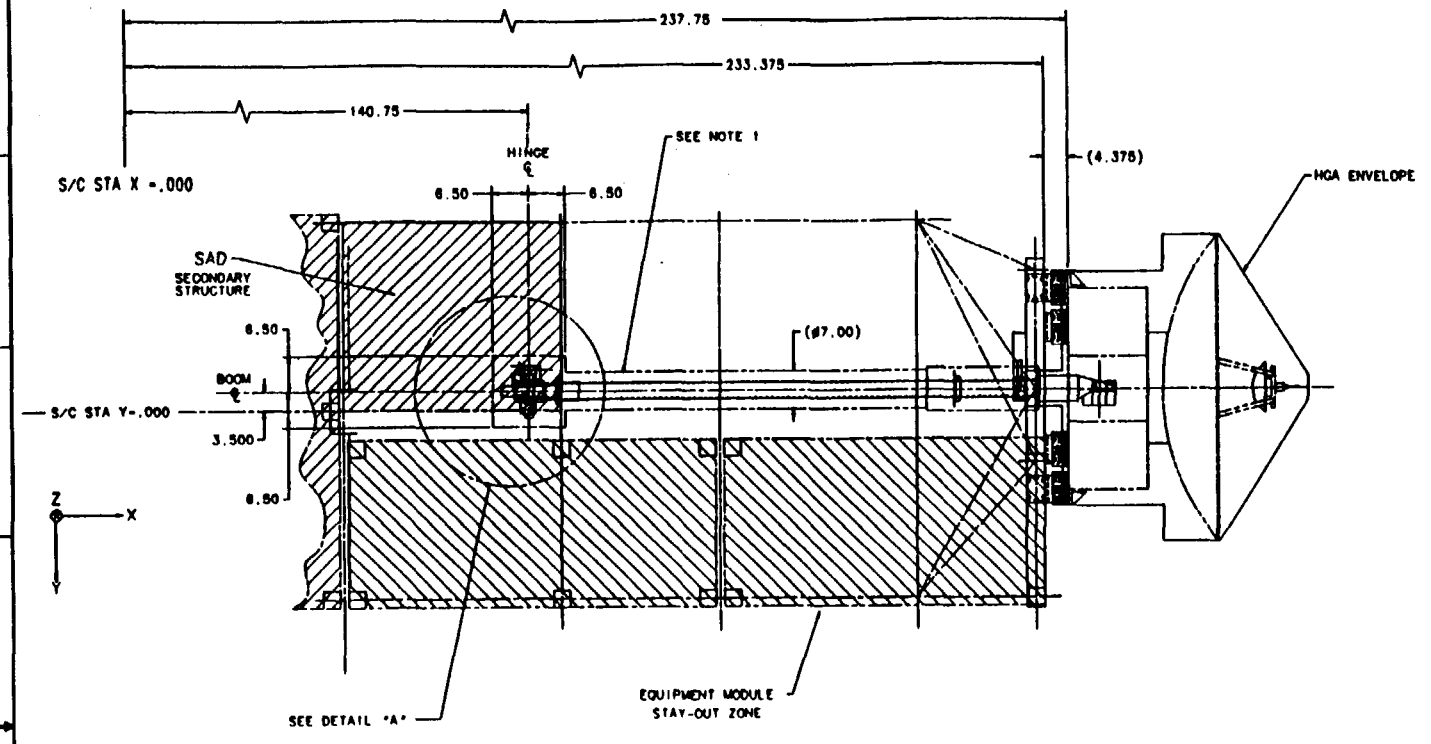

NOTES:

1. HGA DEPLOYMENT SYSTEM STAY-IN VOLUME.

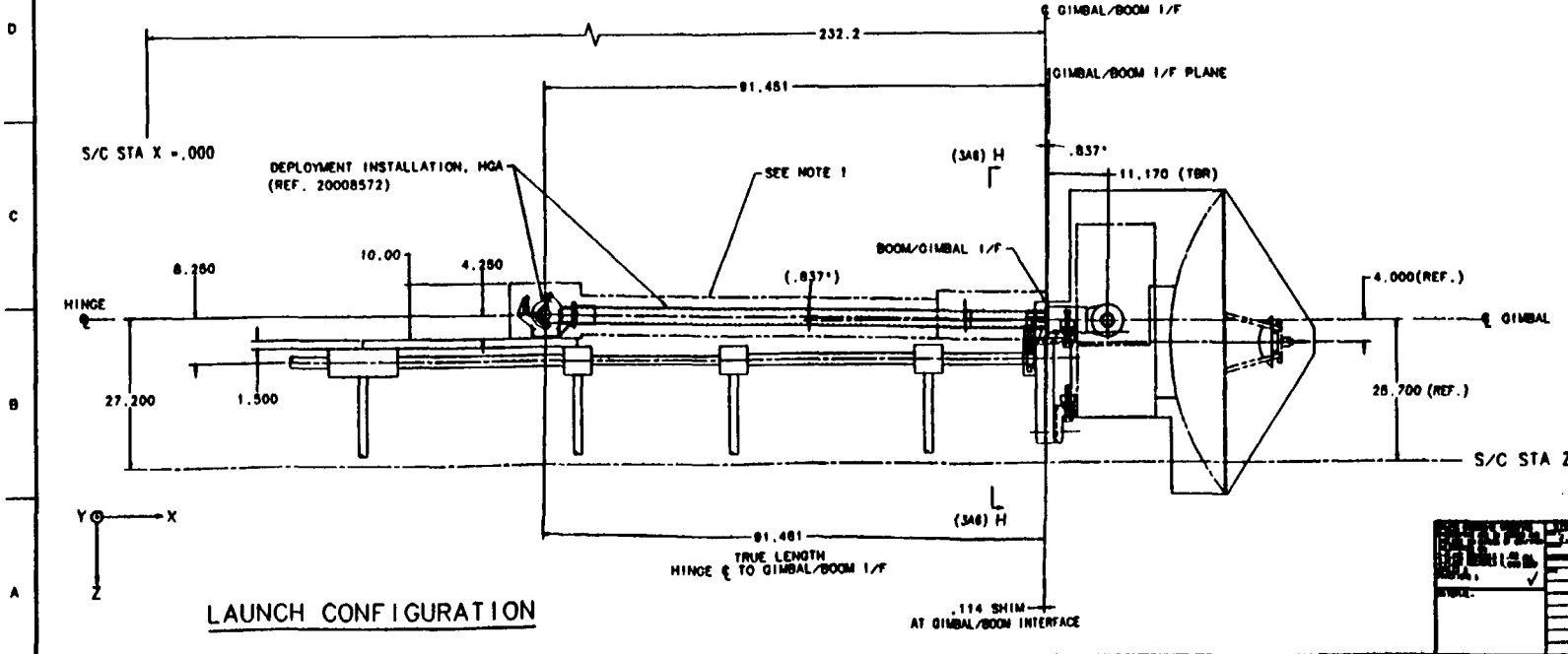

LAUNCH CONFIGURATION

11-JUNE-93

PRELIMINARY

GE Astro Space

MICD

HIGH GAIN ANTENNA

E 49671 MICD20001418

(TBD)

DEPLOYED CONFIGURATION

11-JUNE-93

PRELIMINARY

E 49671 MICD20001418

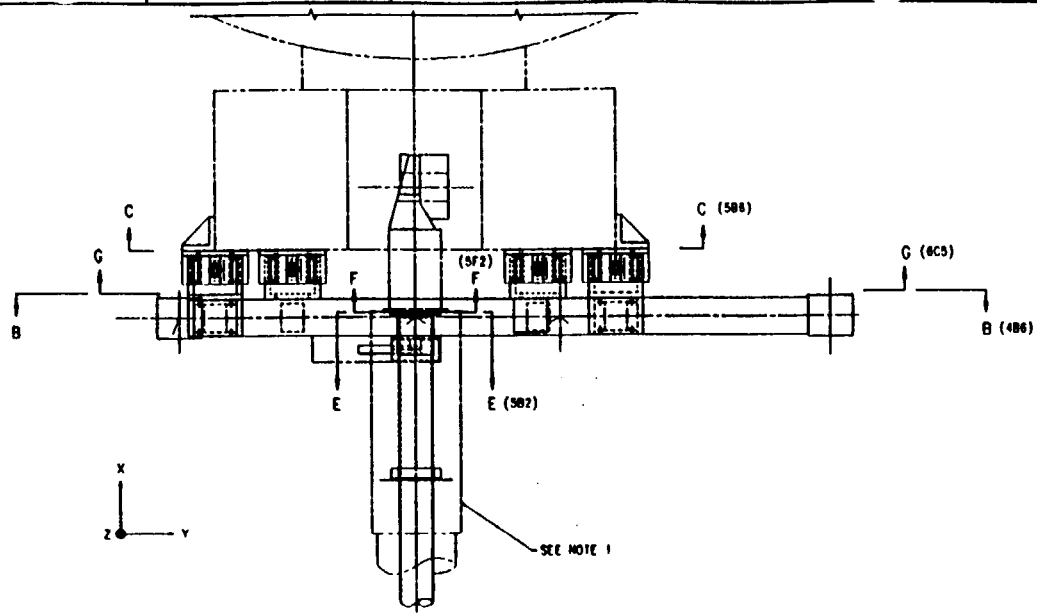

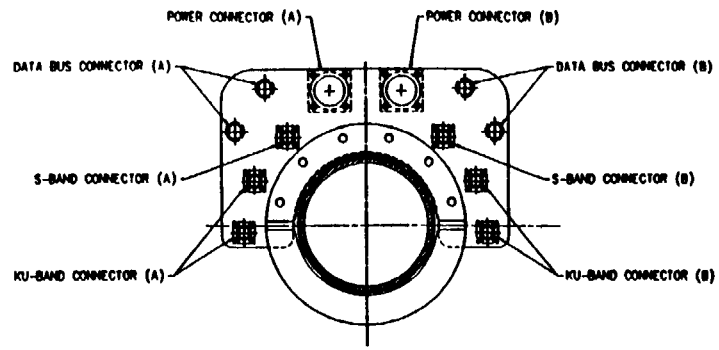

SECTION K-K
BOOM HARNESS
CONNECTOR BRACKET DETAIL
(SCALE: 1/1)
(SEE NOTE 2)

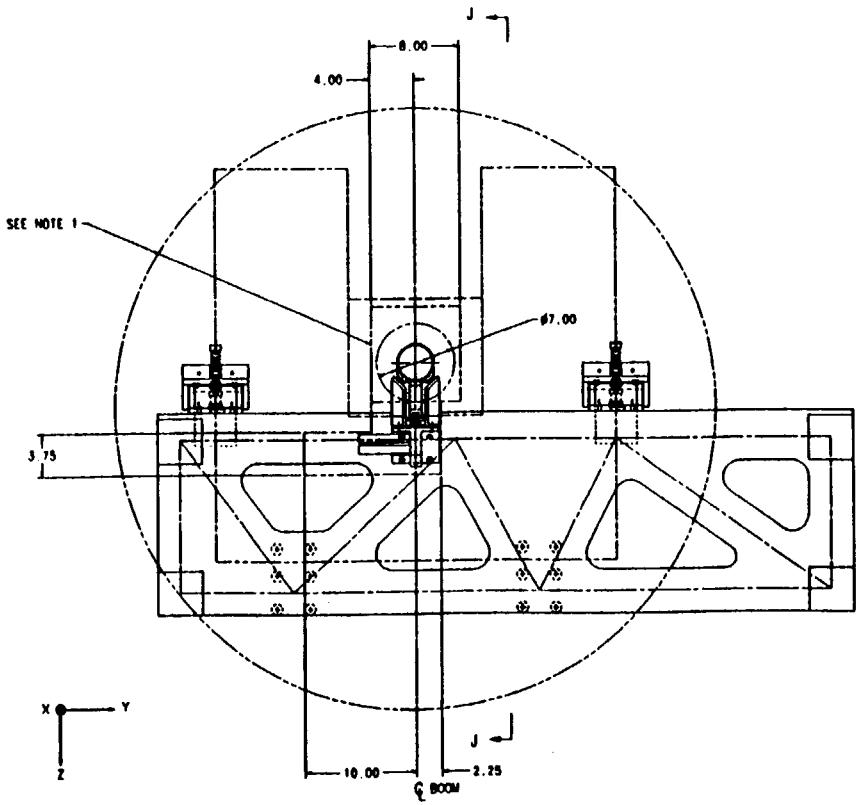

SECTION H-H

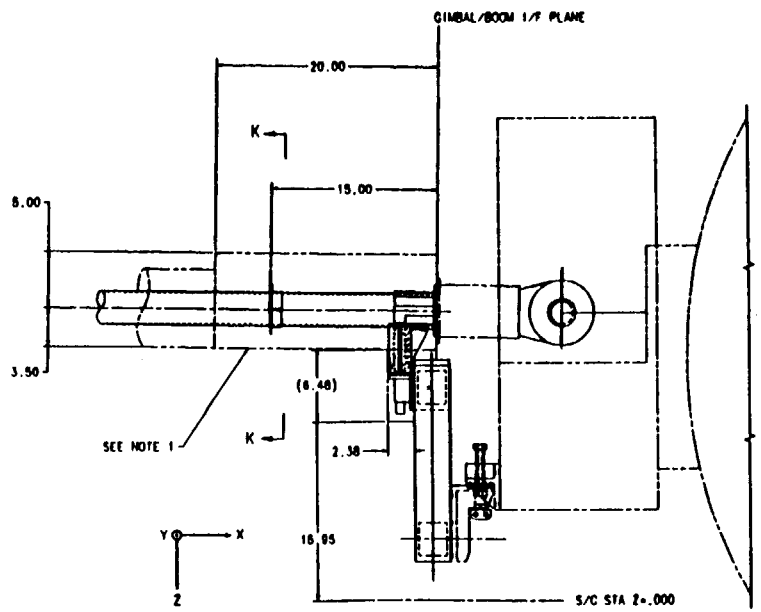

SECTION J-J

11-JUNE-93

PRELIMINARY

	E 49671	MICD20001418

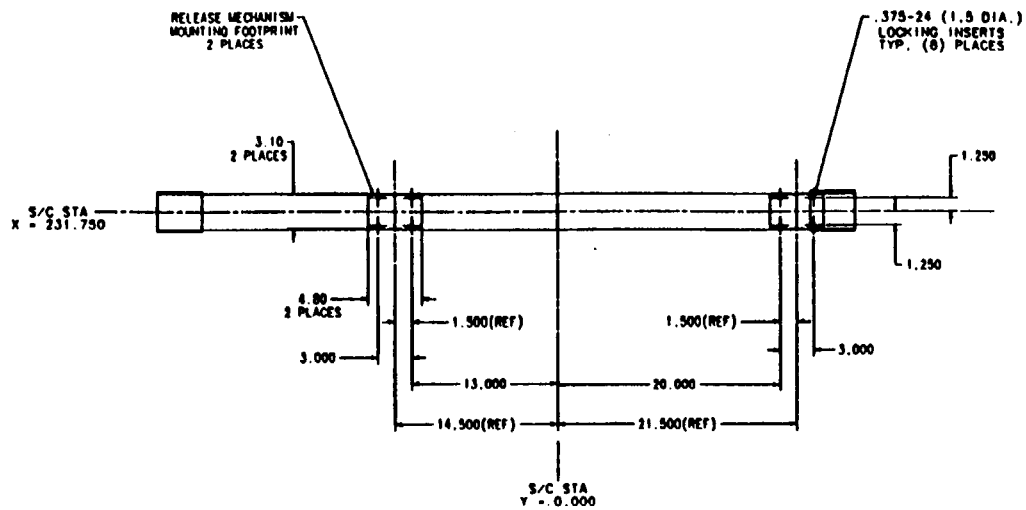

VIEW D-D

SCALE: 1/4

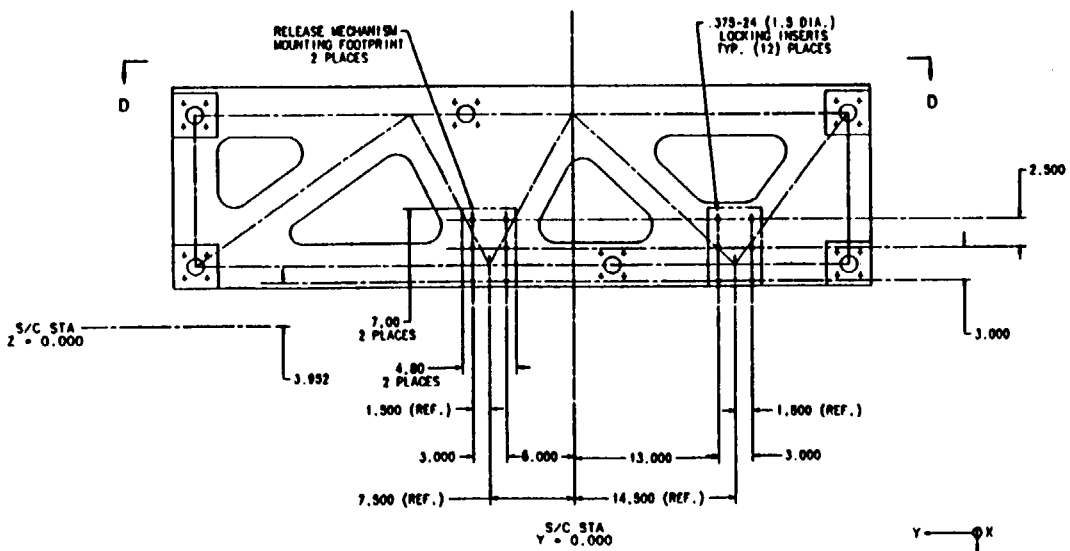

SECTION B-B

ROTATED 180°

SCALE: 1/4

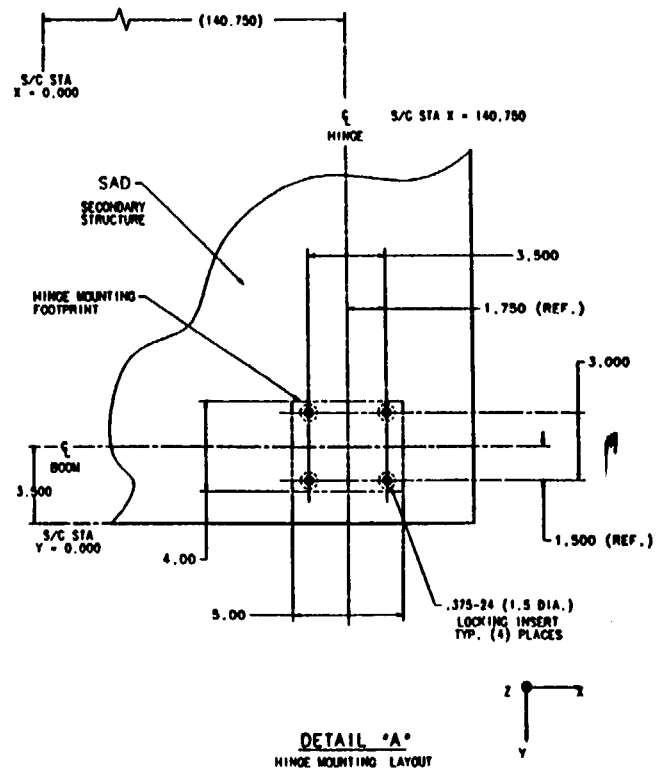

DETAIL "A"

HINGE MOUNTING LAYOUT

SCALE: 1/2

11-JUNE-93

PRELIMINARY

E	49671	MICD20001418

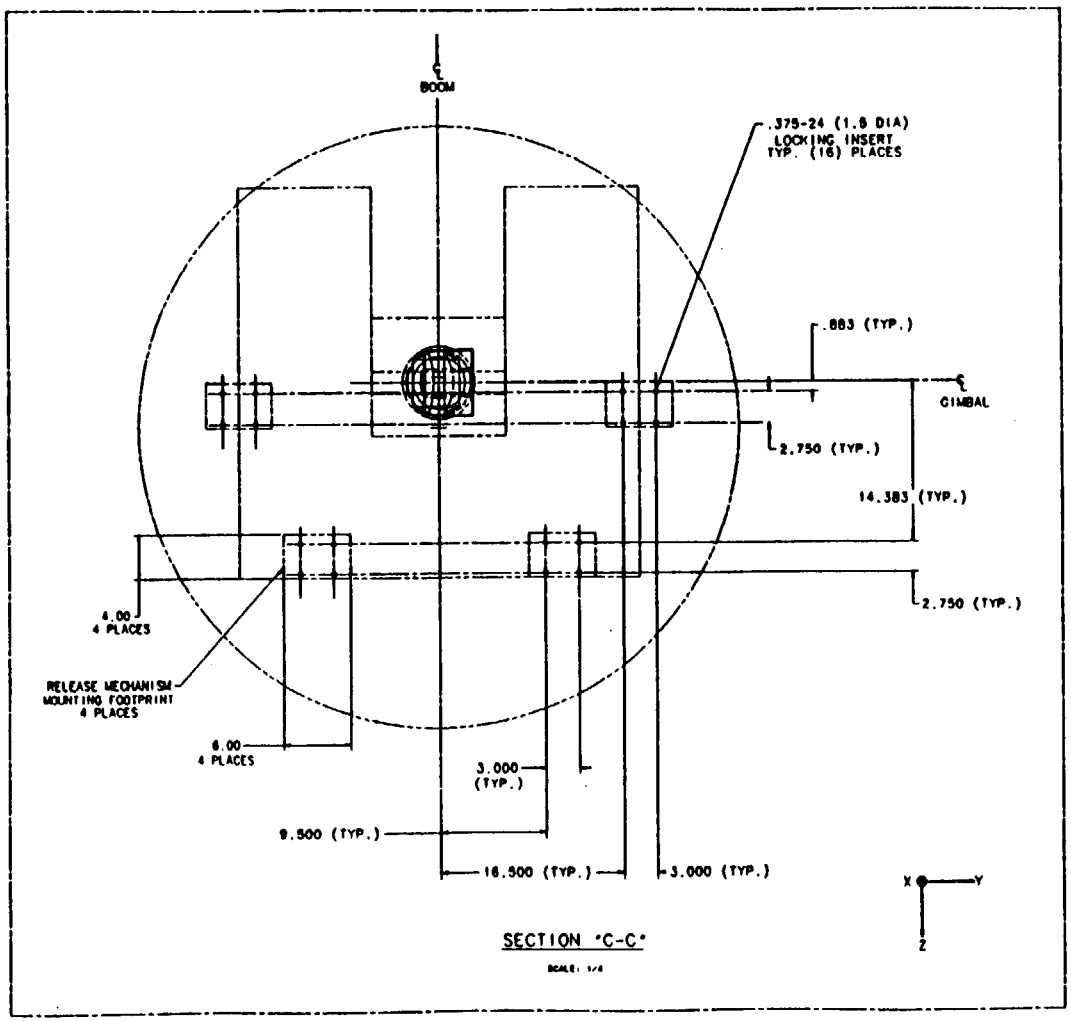

SECTION "C-C"

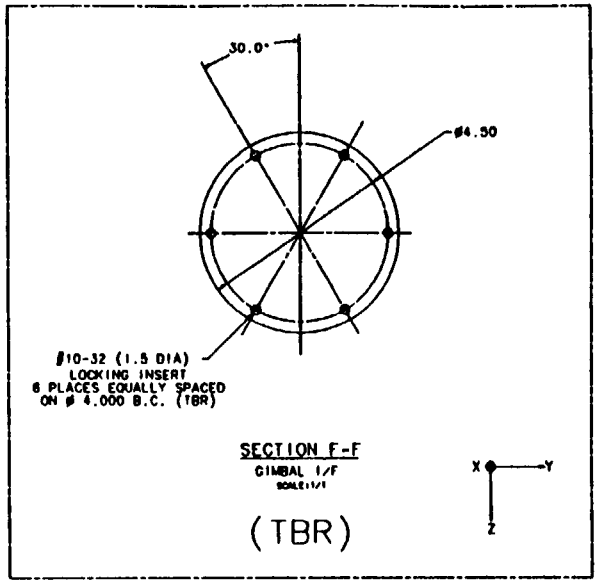

SECTION F-F

GIMBAL I/F

(TBR)

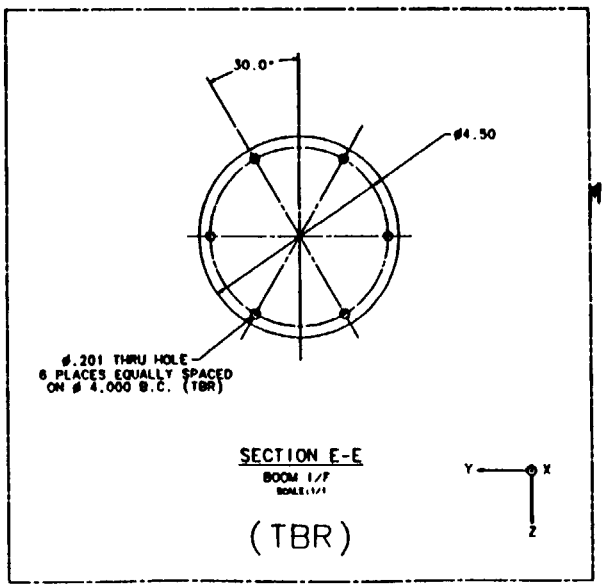

SECTION E-E

BOOM I/F

(TBR)

11-JUNE-93

PRELIMINARY

E 49671 MICD20001418

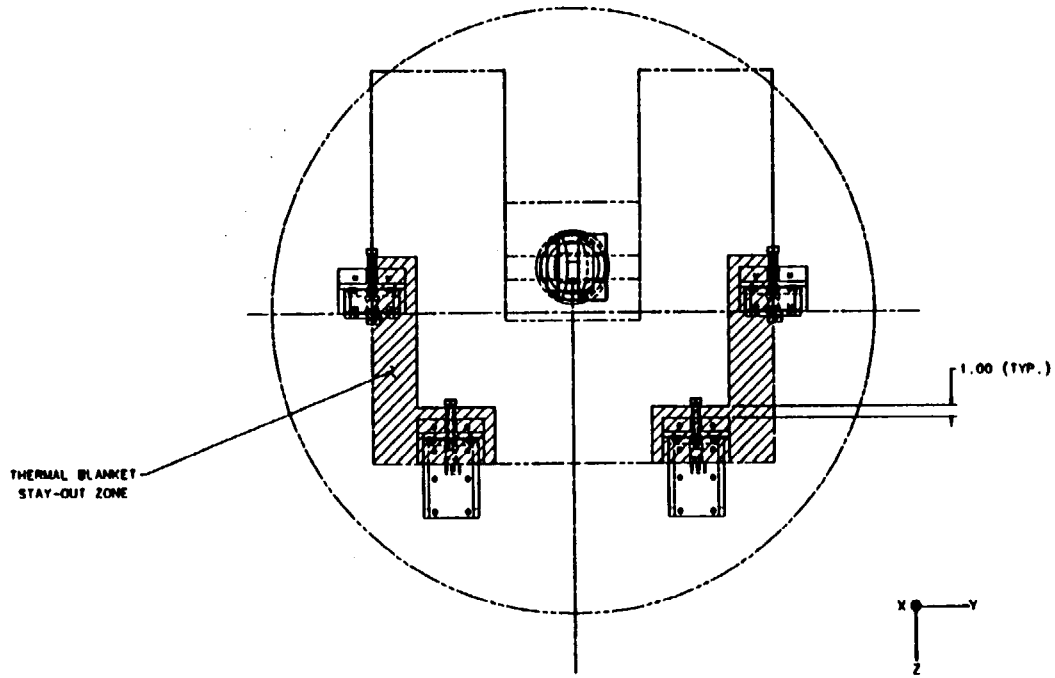

SECTION G-G

SCALE: 1/4

11-JUNE-93

PRELIMINARY

E	49671	MICD20001418

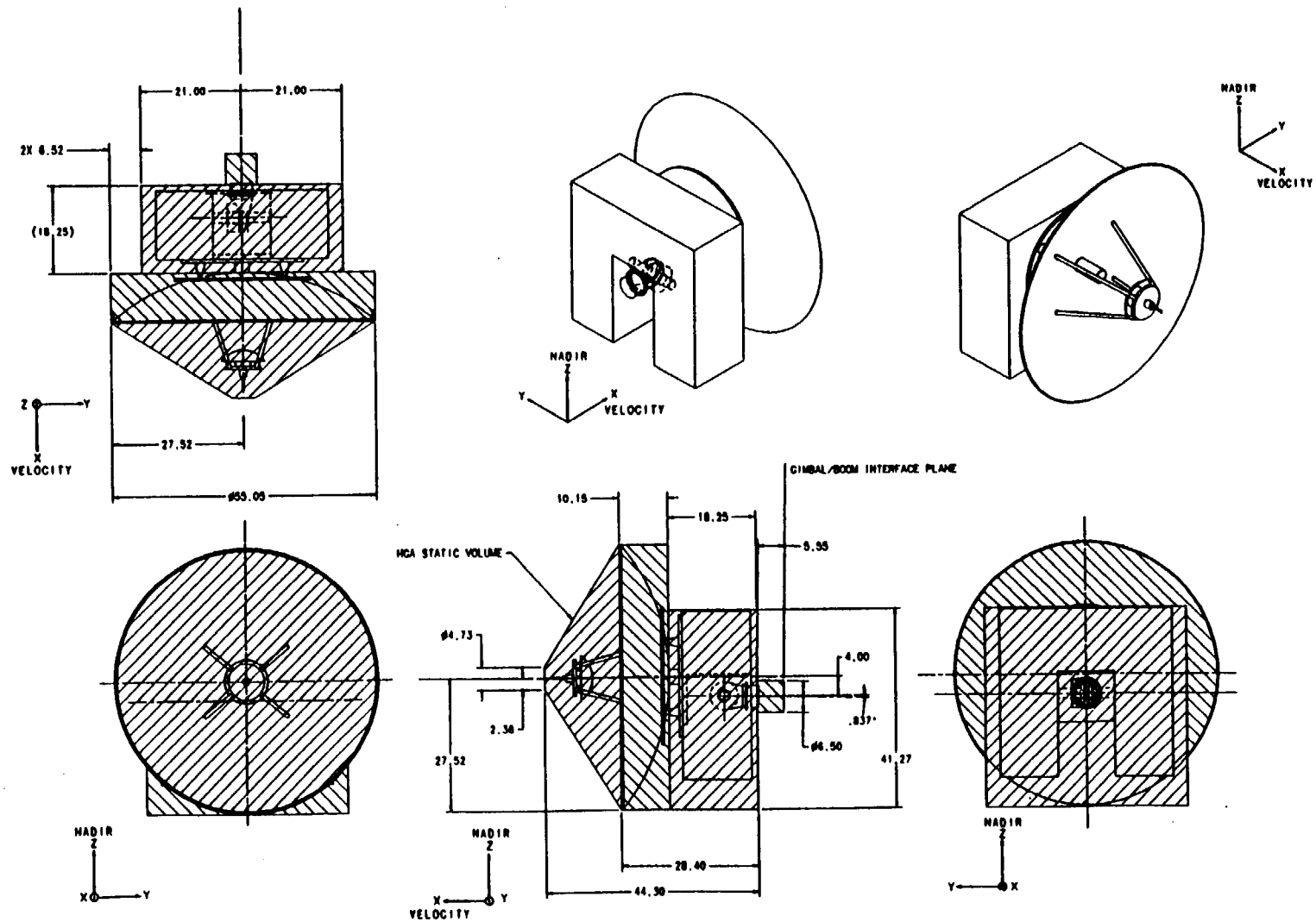

11-JUNE-93

PRELIMINARY

E	49671	MICD20001418

(This page intentionally left blank.)

(Preliminary)
Solar Array MICD
Martin Marietta Dwg. No. 20008514

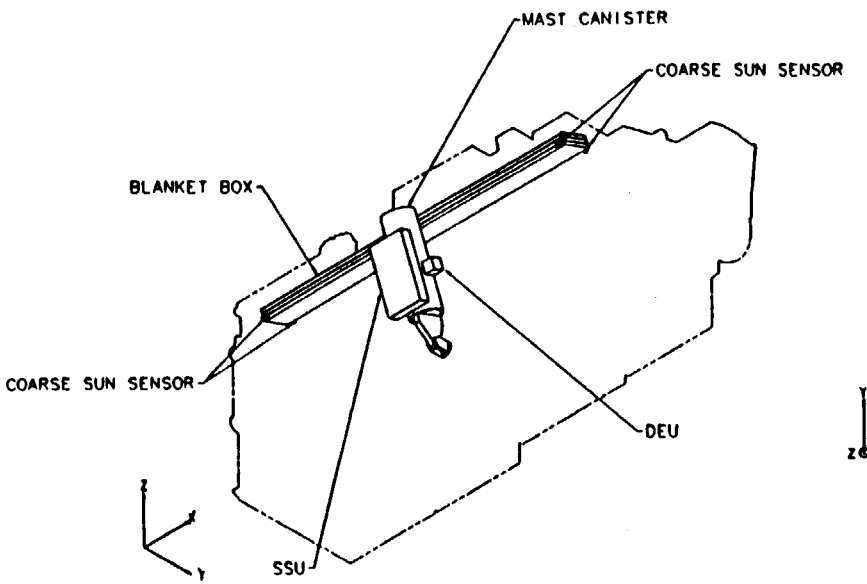

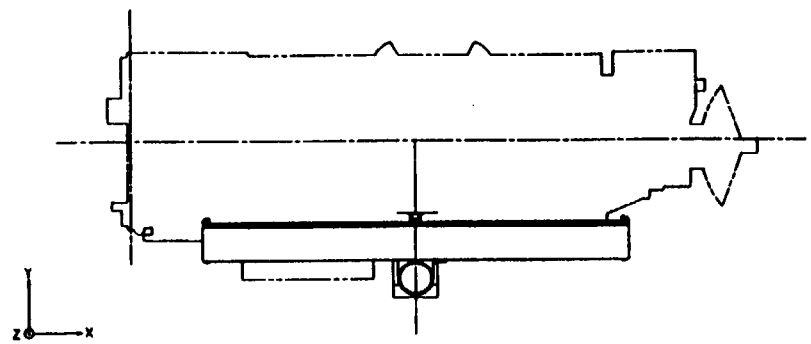

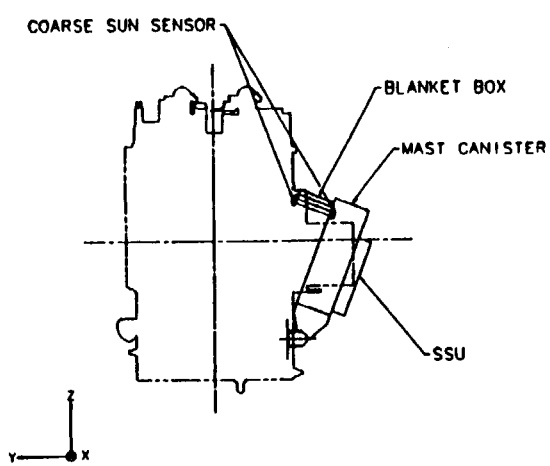

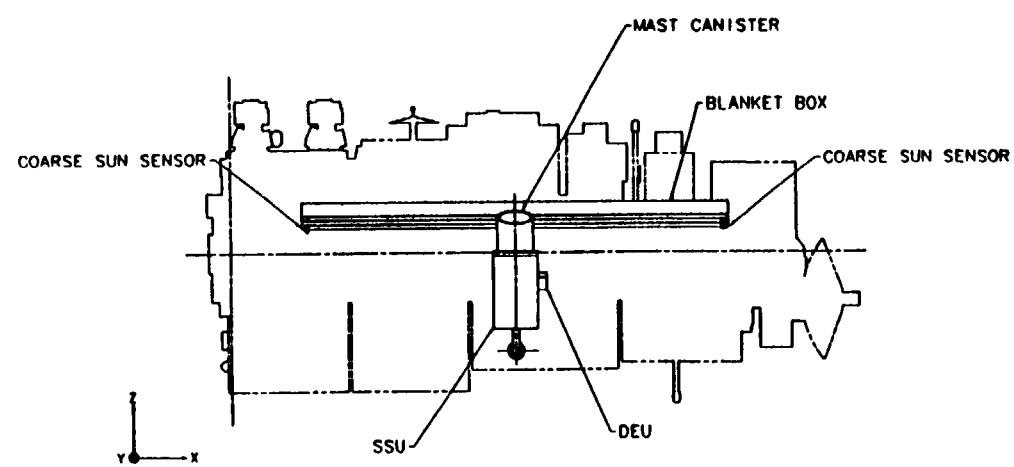

PRELIMINARY
REVIEW ONLY

/lclark/so/solcd.dwg 25 MAR 93

GE Astro Space

MICD,
SOLAR ARRAY ASSEMBLY

E 49071 MICD20008514

SCALE 1/20 SHEET 1 of

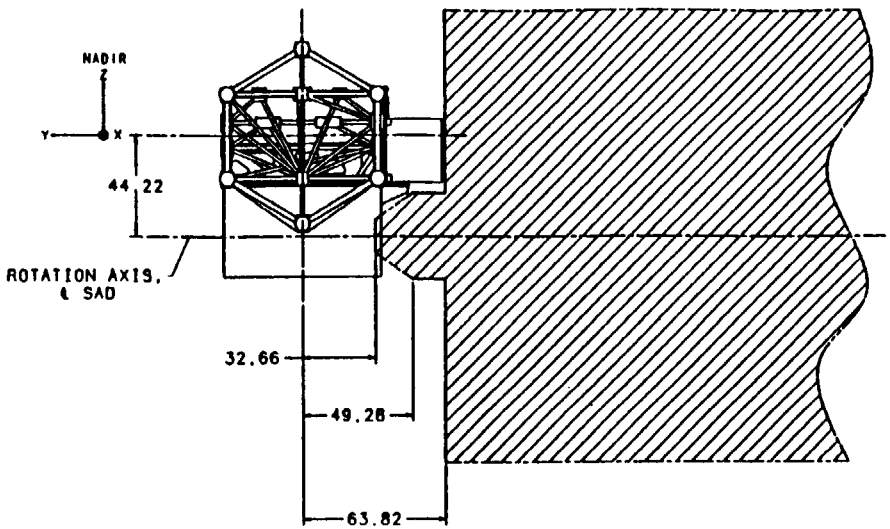

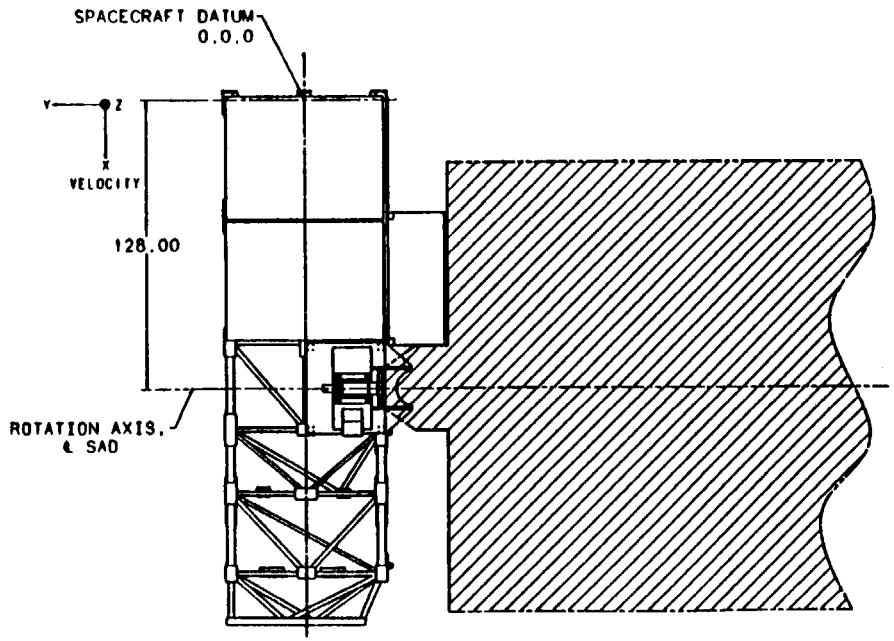

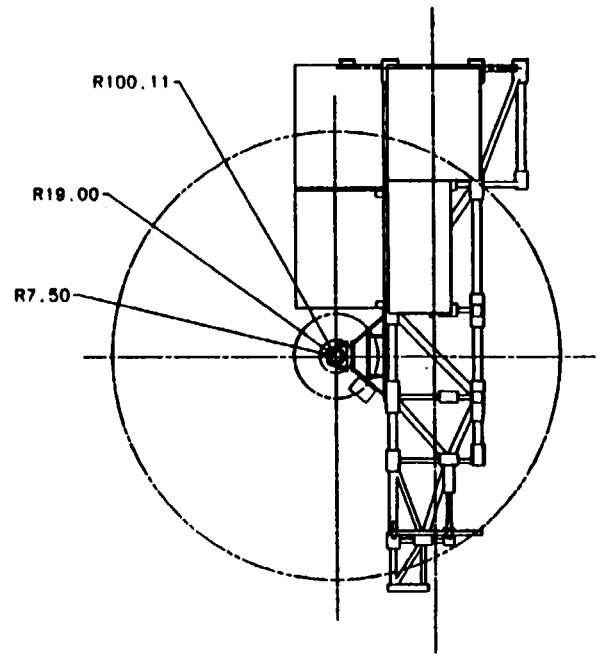

PRELIMINARY
REVIEW ONLY

DENOTES ALLOWABLE AREA FOR DEPLOYED SOLAR ARRAY SYSTEM INCLUDING MMC ASTRO PROVIDED SECONDARY SUPPORT STRUCTURE.

/tolerh/ea/solgd2.dwg 17 JUN 93

E	49871	MICD20008514	
SCALE 1/20		SHEET 2	

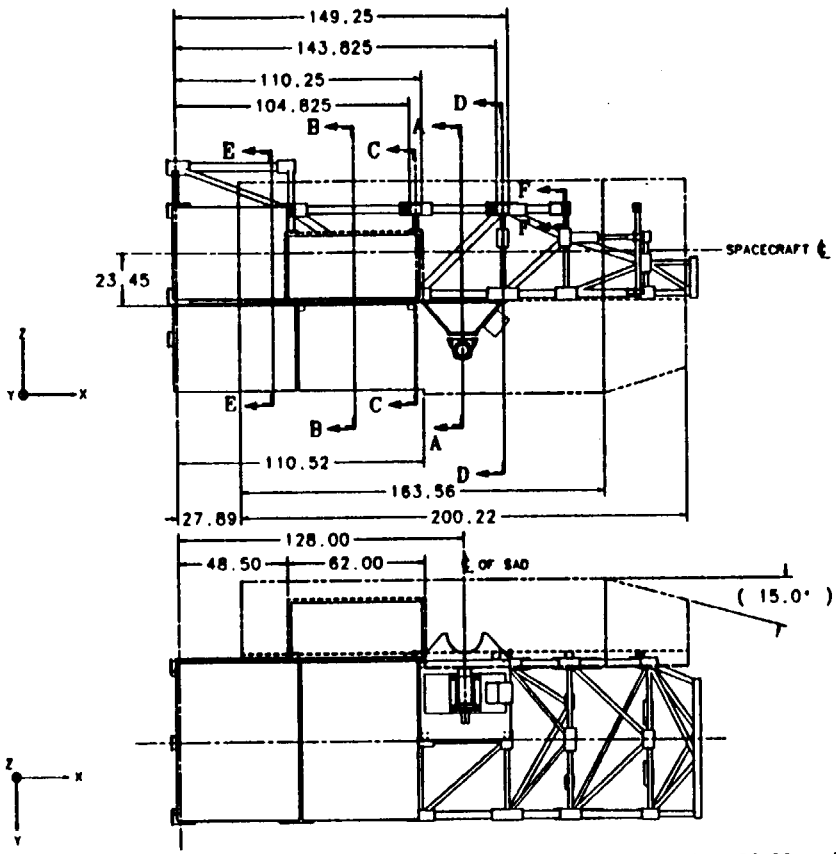

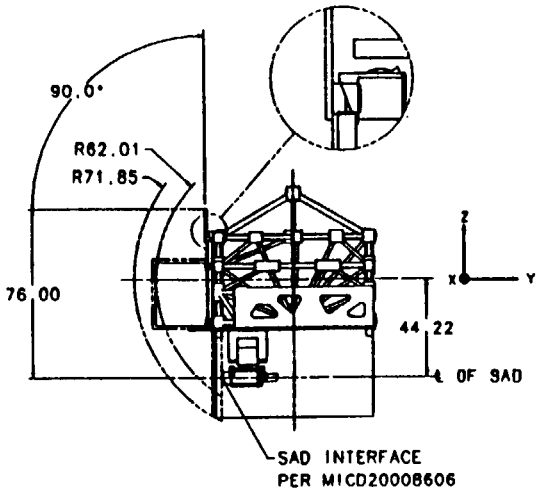

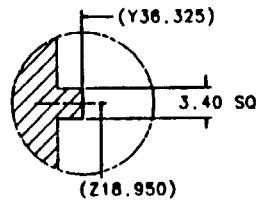

SECTION F-F

LOCAL ENVELOPE EXTENSION CENTERED
OVER BLANKET BOX INTERFACE
TYPICAL 5 PLACES

NOTE:
ALL SPACECRAFT EQUIPMENT
NOT SHOWN FOR CLARITY.

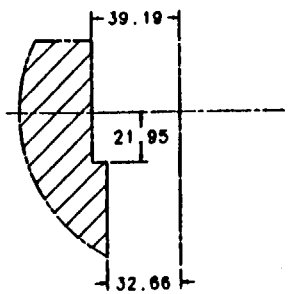

SECTION A-A

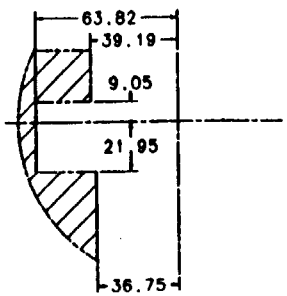

SECTION B-B

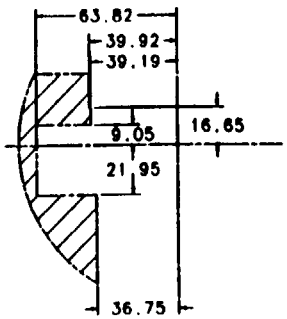

SECTION C-C

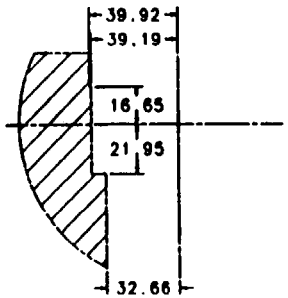

SECTION D-D

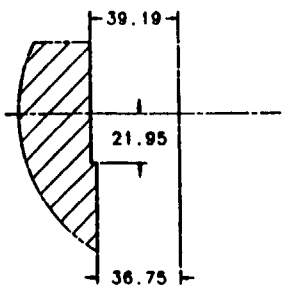

SECTION E-E

▨ DENOTES ALLOWABLE VOLUME FOR STOWED SOLAR ARRAY SYSTEM
INCLUDING MMC ASTRO PROVIDED SECONDARY SUPPORT STRUCTURE.

PRELIMINARY REVIEW ONLY

~jhogan/ss/solcd3.dwg 28 JUN 93

	E	49671	MICD20008514
	SCALE 1/20		SHEET 3

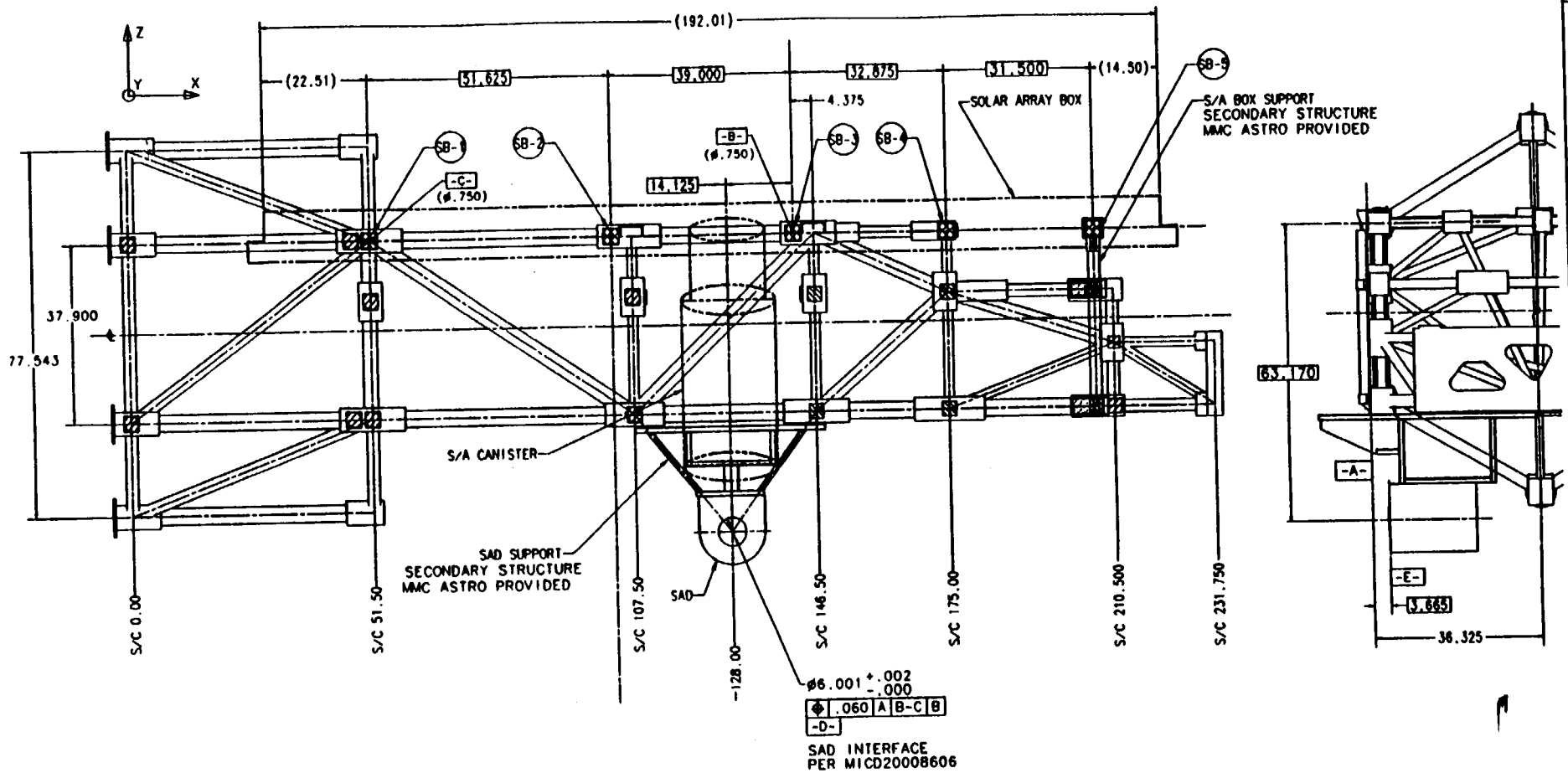

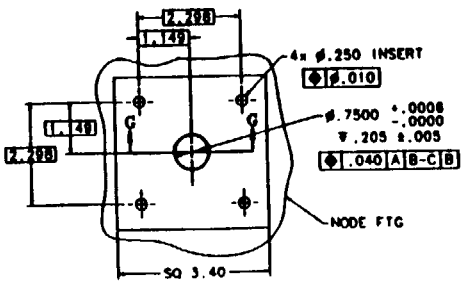

DETAIL A

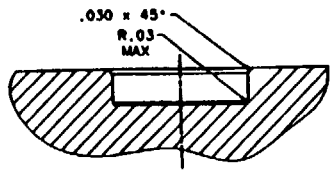

SECTION G

INTERFACE POINT IDENTIFICATION: -Y FACE

LABEL	PURPOSE	KM RESTRAINT AXES	X	Y	Z	DETAIL
SB-1	SOLAR ARRAY BOX BRKT	N/A	51.500	-36.325	18.950	A
SB-2	SOLAR ARRAY BOX BRKT	N/A	103.125	-36.325	18.950	A
SB-3	SOLAR ARRAY BOX BRKT	N/A	142.125	-36.325	18.950	A
SB-4	SOLAR ARRAY BOX BRKT	N/A	175.000	-36.325	18.950	A
SB-5	SOLAR ARRAY BOX BRKT	N/A	206.500	-36.325	18.950	A
SB-6	S/A CANISTER SUPPORT	N/A	TBD	TBD	TBD	
SB-7	S/A CANISTER SUPPORT	N/A	TBD	TBD	TBD	

PRELIMINARY
REVIEW ONLY

~jhogan/sa/salcd4.dwg 28 JUN 93

E 48671 MICD20008514

SCALE -/- SHEET 4

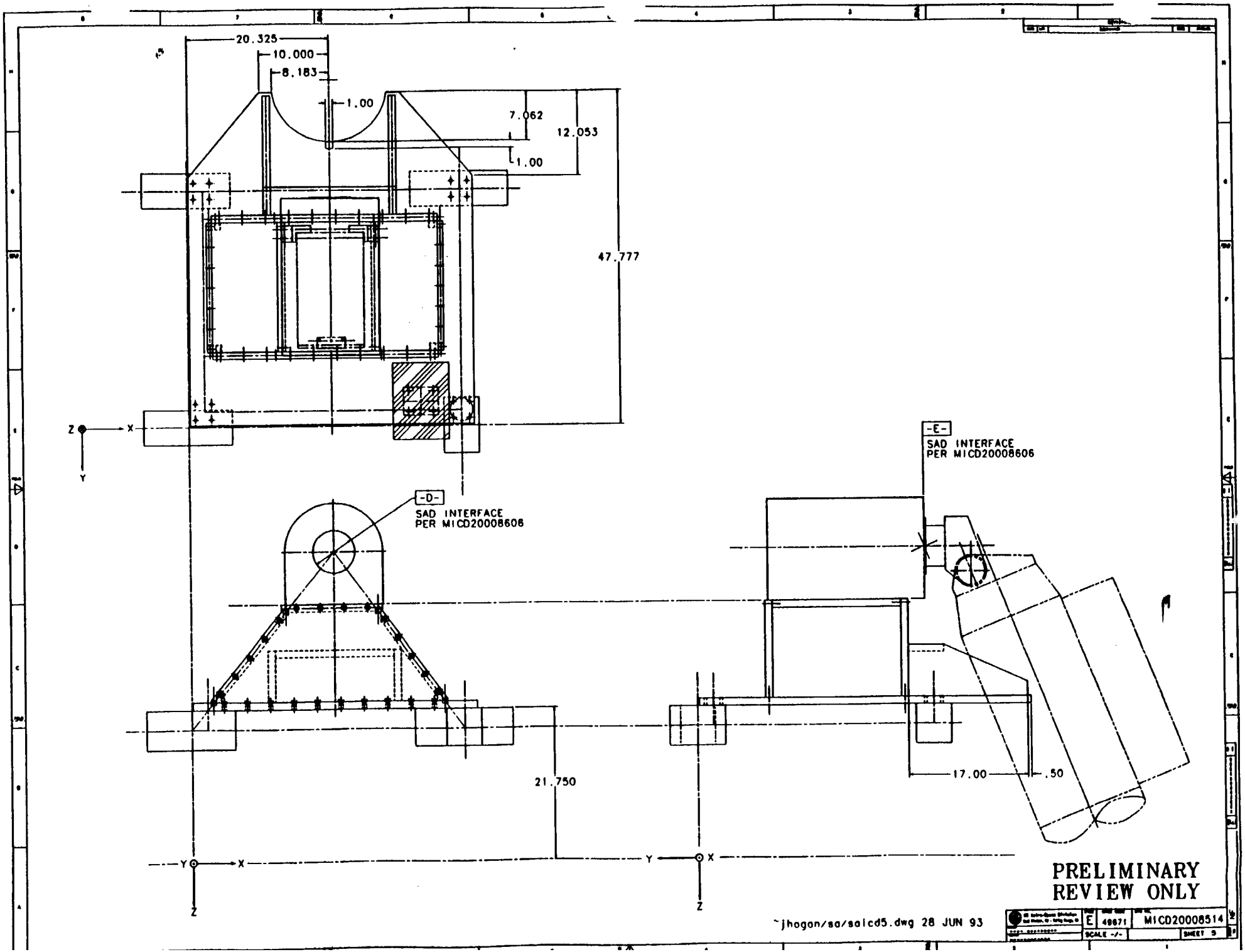
20.325
10.000
8.183
1.00
7.062
12.053
1.00
47.777
Z
X
Y
-D-
SAD INTERFACE
PER MICD20008606
-E-
SAD INTERFACE
PER MICD20008606
21.750
17.00
.50
Y
X
Z
Y
X
Z
PRELIMINARY
REVIEW ONLY
~jhogan/sa/salcd5.dwg 28 JUN 93
E
49671
MICD20008514
SCALE -/-
SHEET 5