CONTRACT NAS5–32500

Earth Observing System

EOS–AM SPACECRAFT PDR DATA PACKAGE

Package 4

Volume III of III

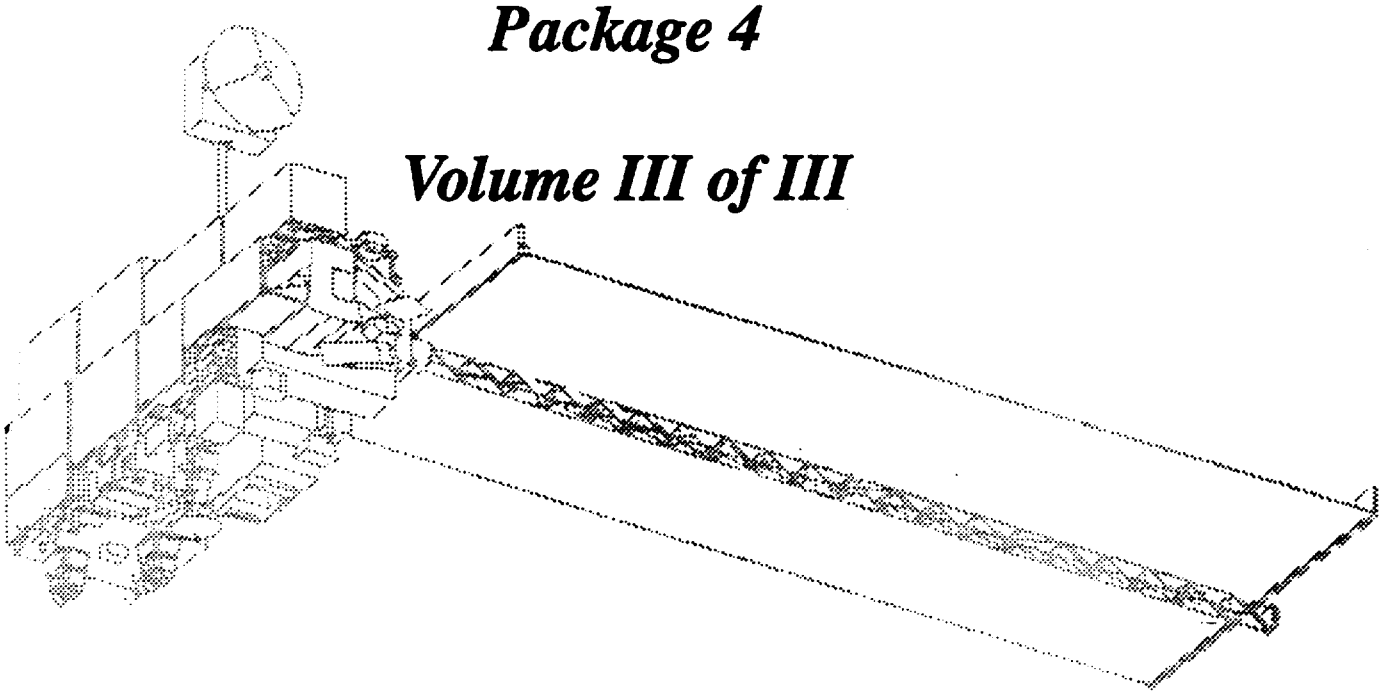

6 August 1993

MD-121: EOS-AM SPACECRAFT PDR DATA PACKAGE

DR/DN	TYPE	TITLE	REV	DOCUMENT	DATE
PACKAGE NO. 1				30 APRIL 1993	
SEP-101	1	Contract End Item (CEI) Specification for the EOS-AM Spacecraft	-	PS20005396	4/15/93
ICD-103	1	EOS-AM Spacecraft to Launch Vehicle Interface Reqrmnts Document	Prelim	IS20008503	4/30/93
ICD-104	1	Radio Frequency ICD Between EOS-AM S/C and STDN	-	IS20008504	3/31/93
PACKAGE NO. 2				8 JULY 1993	
EOS-DN	-	Baseline Description Document (BDD) for the EOS-AM S/C (Preliminary)	I	SE&I-010	6/10/93
EOS-DN	-	System Operating Modes	B	SE&I-001	5/21/93
SP-301	2	Performance Spec. Command & Data Handling S/S for EOS-AM S/C	-	PS20008567	6/28/93
SP-401	2	Performance Spec. Communications S/S for EOS-AM S/C	-	PS20008580	6/30/93
SP-501	2	Performance Spec. Electrical Power S/S for EOS-AM S/C	-	PS20004749	6/28/93
SP-741	2	Performance Spec. Electrical Accommodations S/S for EOS-AM S/C	-	PS20008636	7/6/93
SP-861	2	Critical Item Devlpmt. Spec. High Gain Antenna Assembly for EOS-AM S/C	-	PS20008513	10/16/92
SP-871	2	Critical Item Devlpmt. Spec. Solar Array Assembly for EOS-AM S/C	-	PS20008514	5/7/93
SEP-106	2	Electromaagnetic Compatibility (EMC) Control Plan for EOS-AMS/C	A	PN20005869	6/28/93
ICD-106	1	Interface Control Document (ICD) Data Format Control Book for EOS-AM S/C	Prelim	IS20008658	6/8/93
SD-110	2	EOS-AM S/C Flight Software System Requirements Specification	-	20008662	5/6/93
VRD-100	2	Verification Plan for the EOS-AM S/C	-	PN20005404	5/5/93

MD-121: EOS-AM SPACECRAFT PDR DATA PACKAGE (CONT.)

DR/DN	TYPE	TITLE	REV	DOCUMENT	DATE
Package No. 3				**22 JULY 1993**	
SP-101	2	Performance Spec. Structures & Mechanism S/S for EOS-AM S/C	-	PS20001415	7/16/93
SP-201	2	Performance Spec. Thermal Control S/S for EOS-AM S/C	-	PS20008549	7/20/93
SP-601	2	Performance Spec. Guidance, Navigation & Control S/S for EOS-AM S/C	-	PS20004937	7/21/93
EOS-DN	-	Housekeeping EM Layout Drawings	A	CNF-017	6/18/93
EOS-DN	-	Launch/On-orbit Deployed Configuration Layout	A	CNF-018	7/8/93
EOS-DN	-	Primary Structure Layouts	-	CNF-019	6/18/93
EOS-DN	-	Propulsion Module Layouts	-	CNF-020	7/7/93
EOS-DN	-	Flight Operations Management Plan	-	FO-001	6/30/93
Package No. 4				**6 August, 1993**	
VOLUME 1					
ICD-101	1	General Interface Spec. (GIS) for EOS-AM S/C	A	IS20008501	7/30/93
SP-701	2	Performance Spec. Propulsion S/S for EOS-AM S/C	-	PS20008617	8/5/93
SP-702	2	Performance Spec. Propulsion Module for EOS-AM S/C	-	PS20008618	7/30/93
SP-801	2	Performance Spec. GN&C Sensor Equipment Module for EOS-AM S/C	-	PS20001407	7/30/93
SP-801	2	Performance Spec. RWA Equipment Module for EOS-AM S/C	-	PS20001409	7/30/93
SP-801	2	Performance Spec. Power Equip. Module & Battery Panel for EOS-AM S/C	-	PS20001408	8/4/93
SP-801	2	Performance Spec. Recorder Equipment Module for EOS-AM S/C	-	PS20001411	7/30/93
SP-801	2	Performance Spec. C&DH/COMM Equipment Module for EOS-AM S/C	-	PS20008745	7/30/93

DR/DN	TYPE	TITLE	REV	DOCUMENT	DATE
Package No. 4 (Continued)					**6 August, 1993**
SP-801	2	Performance Spec. DAS Panel for EOS-AM S/C	-	PS20008571	7/30/93
EOS-DN	-	Equip. Module & Installation Top Level Signal Flow Diagrams	A	EAS-007	7/23/93
EOS-DN	-	Propellant Budget for EOS-AM S/C	-	RES-023	7/23/93
VOLUME II					
VRD-105	2	Spacecraft & Subsystem Test Plan for EOS-AM S/C	Prelim	PN20008664	7/30/93
VRD-110	2	Verification Spec. for EOS-AM S/C	A	PS20005404	8/6/93
VRD-800	2	S/C Assembly Plan for EOS-AM S/C	Prelim	PN20005405	7/30/93
SEP-109	2	Energy Balance Model - User's Guide for EOS-AM S/C	-	20008707	*
SEP-120	3	Mass Properties Report for EOS-AM S/C	Prelim	20001390	7/30/93
EOS-DN	-	EOS-AM Spacecraft Thermal Directory	-	TCS-053	7/27/93
-	-	Ground Systems Requirements Database	Prelim	20043119	7/14/93
-	-	Miscellaneous Mechanical Drawings:			
	-	High Gain Antenna MICD	-	MICD20001418	
	-	Solar Array MICD	-	MICD20008514	
	-	Mechanical Layout Dwgs.-Secondary Structure & CPHTS Plumbing	-	-	
VOLUME III					
PA-500	2	Failure Modes, Effects & Critical Analysis (FMECA)	Prelim	20008657	7/30/93
PA-510	2	Critical Items List (CIL)	Prelim	20005652	7/30/93
PA-520	2	Reliability Assessment for EOS-Am S/C	Prelim	20008654	7/30/93
PA-560	3	Limited Life Test	Prelim	20008653	7/30/93
PA-600	2	Fabrication & Assembly Flow Plan	Prelim	20008647	7/30/93

NOTE * Proprietary Document, will be shipped under separate cover.

(Preliminary)
Failure Modes and Effects Analysis (FMEA) for EOS–AM Spacecraft (PA–500a)

20008657
CAGE No. 49671
30 July 1993

Preliminary
Failure Modes and Effects Analysis (FMEA)
EOS–AM Spacecraft
(PA–500a)

Prepared under:
Contract NAS5–32500
NASA Goddard Space Flight Center
Greenbelt, Maryland 20771

Prepared by:
Martin Marietta Corporation
Astro Space
P.O. Box 800
Princeton, New Jersey 08543–0800

DCC072193

REVISION LOG

This log identifies those portions of this document which have been revised since the original issue. Revised portions of each page, for the current revision only, are identified by marginal striping.

Revision	Paragraph Number(s) Affected	Rev. Date	Approval
Preliminary		07/30/93	WS

TABLE OF CONTENTS

SECTION / PARAGRAPH	TITLE	PAGE
1	SCOPE	1
2	REFERENCE DOCUMENTS	3
2.1	Government Documents	3
2.1.1	NASA Documents	3
2.1.2	Military Documents	3
2.1.3	Other Government Documents	3
2.2	Non–Government Documents	3
2.2.1	Martin Marietta Astro Space Documents	3
2.2.2	Other Non–Government Documents	3
3	SPACECRAFT FMEA OVERVIEW	5
3.1	Mission Success Definitions	5
3.1.1	Mission Success Definition For The Spacecraft Bus	5
3.1.2	Mission Success Definition For The EOS Instruments	5
3.2	Mission Phases	5
3.2.1	Pre–operational Mission Phase	5
3.2.2	Operational Mission Phase	7
3.3	Level of Analysis	7
3.3.1	Preliminary Component Level FMEA	7
3.3.2	Detailed Hardware Analysis	7
3.3.3	Functional Block Diagram	7
3.3.4	Reliability Block Diagram	7
3.4	Ground Rules and Assumptions	7
3.4.1	Subcontractor FMEAs	8
3.5	Criticality Classifications	8
3.6	FMEA Worksheets	8
4	FMEA SUMMARY	11
4.1	Spacecraft Bus Summary	11

TABLE OF CONTENTS (Continued)

SECTION / PARAGRAPH	TITLE	PAGE
4.2	Instruments Summary	11
5	SPACECRAFT BUS SUBSYSTEM FMEAS	13
5.1	Electrical Power Subsystem (EPS) FMEA	15
5.1.1	Description	15
5.1.2	Functional Block Diagram	16
5.1.3	Reliability Block Diagram	16
5.1.4	Subcontractor FMEAs	16
5.1.5	Summary of Findings	16
5.1.6	Failure Modes Studied	16
5.1.7	FMEA Worksheets	22
5.2	Propulsion Subsystem (PROPS) FMEA	22
5.2.1	Description	22
5.2.2	Functional Block Diagram	23
5.2.3	Reliability Block Diagram	23
5.2.4	Subcontractor FMEAs	25
5.2.5	Summary of Findings	25
5.2.6	Failure Modes Studied	27
5.2.7	FMEA Worksheets	27
5.3	Command and Data Handling Subsystem (C&DHS) FMEA	27
5.3.1	Description	27
5.3.2	Functional Block Diagram	29
5.3.3	Reliability Block Diagram	29
5.3.4	Subcontractor FMEAs	29
5.3.5	Summary of Findings	35
5.3.6	Failure Modes Studied	35
5.3.7	FMEA Worksheets	36
5.4	Communications Subsystem (COMMS) FMEA	36
5.4.1	Description	36
5.4.1.1	Communications Links and Link Parameters	36

TABLE OF CONTENTS (Continued)

SECTION / PARAGRAPH	TITLE	PAGE
5.4.1.2	Communications Services	37
5.4.2	Functional Block Diagram	38
5.4.3	Reliability Block Diagram	38
5.4.4	Subcontractor FMEAs	38
5.4.5	Summary of Findings	38
5.4.6	Failure Modes Studied	38
5.4.7	FMEA Worksheets	38
5.5	Guidance, Navigation & Control Subsystem (GN&CS) FMEA	38
5.5.1	Description	38
5.5.2	Functional Block Diagram	42
5.5.3	Reliability Block Diagram	42
5.5.4	Subcontractor FMEAs	42
5.5.5	Summary of Findings	42
5.5.6	Failure Modes Studied	42
5.5.7	FMEA Worksheets	47
5.6	Thermal Control Subsystem (TCS) FMEA	47
5.6.1	Description	47
5.6.2	Functional Block Diagram	48
5.6.3	Reliability Block Diagram	50
5.6.4	Subcontractor FMEAs	50
5.6.5	Summary of Findings	50
5.6.6	Failure Modes Studied	50
5.6.7	FMEA Worksheets	50
5.7	Structures and Mechanisms Subsystem (SMS) FMEA	50
5.7.1	Description	50
5.7.2	Structures	55
5.7.2.1	Restraint/Deployment Mechanisms	55
5.7.2.2	Solar Array Drive (SAD)	55
5.7.2.3	Launch Vehicle Separation System	56
5.7.3	Functional Block Diagram	56

TABLE OF CONTENTS (Continued)

SECTION / PARAGRAPH	TITLE	PAGE
5.7.4	Reliability Block Diagram	56
5.7.5	Subcontractor FMEAs	56
5.7.6	Summary of Findings	56
5.7.7	Failure Modes Studied	59
5.7.8	FMEA Worksheets	60
6	NOTES	61
6.1	Definitions	61
6.2	Acronyms and Abbreviations	61
	APPENDIX I	
10	ELECTRICAL POWER SUBSYSTEM (EPS) FMEA	63
	APPENDIX II	
20	PROPULSION SUBSYSTEM (PROPS) FMEA	71
	APPENDIX III	
30	COMMAND AND DATA HANDLING SUBSYSTEM (C&DHS) FMEA	77
	APPENDIX IV	
40	COMMUNICATIONS SUBSYSTEM (COMMS) FMEA	83
	APPENDIX V	
50	GUIDANCE, NAVIGATION & CONTROL SUBSYSTEM (GN&CS) FMEA	93
	APPENDIX VI	
60	THERMAL CONTROL SUBSYSTEM (TCS) FMEA	97

TABLE OF CONTENTS (Continued)

SECTION / PARAGRAPH	TITLE	PAGE
	APPENDIX VII	
70	STRUCTURES AND MECHANISMS (SMS) FMEA	101

LIST OF FIGURES

FIGURE	TITLE	PAGE
1	EOS Mission Profile	6
2	Sample FMEA Form	9
3	EPS Functional Block Diagram	17
4	EPS Reliability Block Diagram	18
5	SSU Reliability Block Diagram	19
6	PDU Reliability Block Diagram	20
7	Battery Assembly Reliability Block Diagram	21
8	Propulsion Module Functional Diagram	24
9	Propulsion Subsystem Schematic	25
10	Propulsion Subsystem Reliability Block Diagram	26
11	Command and Data Handling Subsystem Block Diagram	30
12	SCC Functional Interface Diagram	31
13	CTIU Electrical Interfaces	32
14	C&DH Subsystem Reliability Block Diagram	33
15	Housekeeping BDU Reliability Block Diagram	34
16	Instrument BDU Reliability Block diagram	34
17	Propulsion Module BDU Reliability Block Diagram	35
18	Communications Subsystem: Links	36
19	Communications Subsystem Functional Block Diagram	39
20	Communications Subsystem Reliability Block Diagram	40
21	GN&C Subsystem Functional Block Diagram	43
22	GN&CS Electrical Interfaces	44
23	GN&C Subsystem Reliability Block Diagram	45
24	ACE Reliability Block Diagram	46
25	TCS Key Features	48
26	Thermal Control Subsystem Functional Block Diagram	49
27	Thermal Control Subsystem Reliability Block Diagram	51
28	CPHTS Reliability Block Diagram	52
29	Equipment Module Reliability Block Diagram	53
30	Distributed Housekeeping Reliability Block Diagram	54

LIST OF FIGURES (Continued)

FIGURE	TITLE	PAGE
31	HGA Deployment System Reliability Block Diagram	57
32	SA Deployment System Reliability Block Diagram	58

LIST OF TABLES

TABLE	TITLE	PAGE
I	Spacecraft Bus Single Point Failure Summary	11
II	FMEA Failure Mode Identifiers	13
III	EPS Criticality Level 1 Failure Modes	16
IV	EPS Failure Modes	22
V	PROPS Criticality Level 1 Failure Modes	25
VI	PROPS Failure Modes	27
VII	C&DHS Major Components	29
VIII	C&DHS Failure Modes	35
IX	COMMS Failure Modes	41
X	GN&CS Failure Modes	47
XI	TCS Failure Modes	50
XII	SMS Criticality Level 1 Failure Modes	59
XIII	SMS Failure Modes	59

1 SCOPE

This document details the preliminary EOS–AM Spacecraft Failure Modes and Effects Analysis (FMEA). The FMEA reflects the baseline Spacecraft design for the Spacecraft Preliminary Design Review (PDR).

(This page intentionally left blank.)

2 REFERENCE DOCUMENTS

The following documents of the exact issue shown are the higher tier documents to this document.

2.1 Government Documents

2.1.1 NASA Documents

GSFC 420–05–02B 13 November 1992	Earth Observing System (EOS) Performance Assurance Requirements for the EOS–AM Spacecraft

2.1.2 Military Documents

2.1.3 Other Government Documents

2.2 Non–Government Documents

2.2.1 Martin Marietta Astro Space Documents

20004280 12 July 1991	Subcontractor Performance Assurance Requirements
20005396 15 May 1993	Contract End Item (CEI) Specification for the EOS–AM Spacecraft (SEP–101)
20005397 17 January 1992	Product Assurance Implementation Plan, (PA–100)
20008607 05 October 1992	Ground Rules and Assumptions for Failure Modes and Effects Analysis (FMEA) (PA–500)
EOS–DN–SE&I–010 10 June 1993	Baseline Description Document (BDD) for the EOS–AM Spacecraft (preliminary)
Source:	Martin Marietta Astro Space P. O. Box 800 Princeton, NJ 08543–0800

2.2.2 Other Non–Government Documents

None

(This page intentionally left blank.)

3 SPACECRAFT FMEA OVERVIEW

The Spacecraft FMEA is used to identify the failure modes of the individual Spacecraft equipment and to classify the failure modes by the level of criticality to the mission objectives. The preliminary FMEA identifies single point failures early in the design phase so they can be eliminated from the design, if possible.

3.1 Mission Success Definitions

3.1.1 Mission Success Definition For The Spacecraft Bus

The minimum capability required for Spacecraft Bus mission success shall be defined as the capability of providing the instruments with the minimum resources and services for the mission life of five years. The ability to transmit all recorded science data to the EOSDIS vis Ku–band TDRSS or X–band DAS links shall be considered the minimum science transmission capability required for mission success.

3.1.2 Mission Success Definition For The EOS Instruments

EOS instruments must meet their individual requirements for data generation assuming the Spacecraft Bus provided resources are available and within specification. Any self–provided power conversions, thermal control, deployments, critical telemetry or data storage must be included in the instrument reliability assessment. instruments must provide the required science products for the five year mission or the mission duration required by the individual instrument performance specification.

3.2 Mission Phases

The EOS–AM mission is made up of distinct mission phases, each with its own characteristics and purpose. The mission phases of the EOS–AM Spacecraft and the significant events which define the transition from from one phase to another are shown in Figure 1.

The Spacecraft FMEA was performed for the pre–operational and the operational mission phases.

3.2.1 Pre–operational Mission Phase

The pre–operational phase includes the following mission phases:

a. launch/ascent phase

b. orbit acquisition initialization phase

c. orbit acquisition phase.

The launch/ascent phase was assumed to be 0.5 hours in duration. The duration of the remaining phases was assumed to be 120 hours. Only the equipment that is required to operate in this phase was included in the reliability calculations.

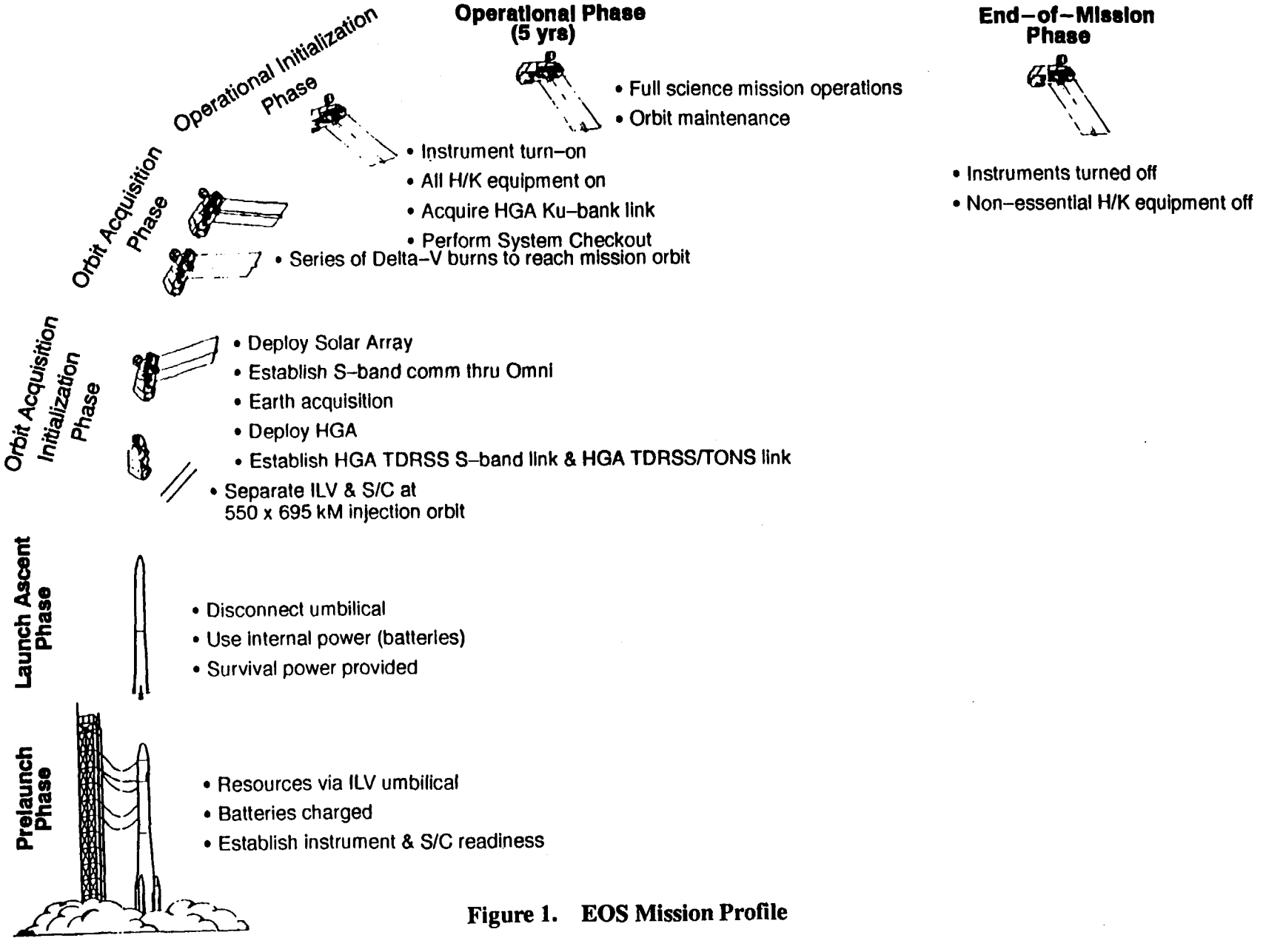

Figure 1. EOS Mission Profile

3.2.2 Operational Mission Phase

The operational phase includes the operational initialization phase and the operational phase for a duration of 5 years. This assumption accounts for the time necessary for the Spacecraft Bus to reach the operational capability to support all of the instruments.

3.3 Level of Analysis

3.3.1 Preliminary Component Level FMEA

The preliminary FMEA for the Spacecraft PDR was performed on components (black boxes) within each Spacecraft Bus subsystem and for each of the instruments. The functional FMEA used subsystem level functional block diagrams, subsystem functional descriptions and reliability block diagrams to identify the outputs for each component in the subsystem. Interfaces and functions occurring within components were not addressed at this level of FMEA. Potential failure modes were identified for each component output depending on the nature of the output (power, signal mechanical rotation, etc.) and the function of the box being studied. Each of these failure modes was documented on a FMEA worksheet, and the effects of each on other functions/boxes within the Spacecraft or instrument were assessed.

3.3.2 Detailed Hardware Analysis

The preliminary FMEA will be revised for the Spacecraft CDR and the analysis will be extended to functions within components. The impact of these additional failures will be assessed on the component level and on the Spacecraft level. The analysis will be extended to the circuit level as required to identify mission single point failures. The analysis will address the cross–strapping of redundant equipment to ensure that no single failure will adversely affect the performance of the redundant capability. The FMEA will specifically address the impact of Spacecraft failures on the instrument interfaces.

3.3.3 Functional Block Diagram

The functional block diagrams were used to identify the outputs of the equipment under study.

3.3.4 Reliability Block Diagram

A reliability block diagram (reliability model) was created for each individual subsystem and the associated lower level components where applicable. The reliability block diagram reflects the redundancy configuration for the design and describes the equipment which is required for mission success.

3.4 Ground Rules and Assumptions

The following ground rules and assumptions were used in performing the FMEA:

a. The analysis considered a single failure mode at a time.

b. Power and signal inputs and software commands to the element being analyzed are assumed to be present and within specification.

c. The only failure mode considered for interface electrical connectors was separation. Failure modes within connectors are not addressed.

d. The FMEA was performed for each of the following mission phases:

   1. Pre–operational mission phase

   2. Operational mission phase

e. Failure modes were only addressed if a plausible cause relating to hardware failures exists. For example, contamination effects due to the natural environment are not addressed in the FMEA. Contamination due to propulsion subsystem leaks are addressed since they are due to hardware failure.

f. The FMEA was performed on all Spacecraft electrical, electronic and electromechanical flight hardware. Critical mechanisms and fluid devices were also studied. Purely structural elements such as bolts and primary structure will not be addressed in the FMEA.

3.4.1 Subcontractor FMEAs

Subcontractor supplied preliminary FMEAs were incorporated into the Spacecraft level FMEA. Information was extracted from the subcontractor FMEAs to show the effects at the Spacecraft level.

3.5 Criticality Classifications

The following criticality classifications were used in the FMEA:

a. **Criticality 1:** A single failure that could result in:

   1. Loss of human life or serious injury to personnel, or

   2. Loss of launch facility or launch vehicle, or

   3. Complete loss of science data prior to required mission life.

b. **Criticality 2:** A single failure that could result in degradation of science data from one or more instruments.

c. **Criticality 3:** Loss of redundancy or no effect on science data.

3.6 FMEA Worksheets

The FMEA is documented on worksheets as shown in Figure 2.

The following sections define each data field on the worksheet and describe the information that is required:

a–d. These fields identify the hardware that is being studied on each specific worksheet. Multiple failure modes may be addressed on a single form.

e. If a separate analysis is performed for individual EOS mission phases, this entry identifies the phase presented on the worksheet.

Failure Modes and Effects Analysis
EOS–AM Spacecraft

MARTIN MARIETTA

MARTIN MARIETTA ASTRO SPACE

Subsystem: A	Subassembly: C	Design Engineering: F	Date:
Component: B	Function: D	Systems Engineering: F	Date:
Mission Phase: E		Reliability Engineering: F	Date:

Failure Mode No.	Item or Function	Failure Mode	Possible Causes	Failure Effects a. Local or Subsystem b. Next Higher Assy. c. Spacecraft	Method of Detection/ Verification	Existing Compensating Features	Space-craft Level Criticality	Remarks and Recommendations
G	H	I	J	K	L	M	N	O

Figure 2. Sample FMEA Form

f. The responsible engineers from Systems, Design, and Reliability Engineering shall sign and date individual sheets to note concurrence with the analysis.

g. Failure Mode Number – A unique number will be used for each failure mode identified. The number will include the subsystem abbreviation and a code for each component. Failure modes will be numbered sequentially for each mode within a component.

h. Item or Function – The component or item output that is being studied is identified. Terminology depicted on functional block diagrams shall be used for consistency and traceability.

i. Failure Mode – The specific failure mode of the item or function that is being studied.

j. Possible Causes – This field contains one or more valid causes of the failure mode being studied.

k. Failure Effects – The specific failure effects of the failure mode are described in this column. If different effects result from the mission phase when the failure occurs, separate entries are made for each. Subcontractors for some elements will be able to complete only the local effects for their hardware. Higher level effects and mission criticality will be added by Reliability and Systems Engineering after submission to Martin Marietta Astro Space (Astro Space).

   Local effects – Included under heading "A". Local effects specifically include the impact that the assumed failure mode has on the operation of the item under consideration.

   Next higher assembly – Included under heading "B". These are effects that the assumed failure mode has on Spacecraft elements at the next higher level. Preliminary FMEAs done to the component level only may exclude this level of effect since the next higher level is the Spacecraft.

   Spacecraft – Included under heading "C". The top level effect that the assumed failure mode has on the performance of the Spacecraft. Loss of instrument support is defined in this entry.

l. Method of Detection/Verification – The means of identifying that the specific failure mode has occurred. This entry should include the specific telemetry point when available. When failure effects for different mission phases are included, their methods of detection must also be addressed.

m. Existing Compensatory Provisions – This entry defines and describes the design provisions or operational workarounds which circumvent or mitigate the effect of the failure mode.

n. Spacecraft Level Criticality – The criticality of the specific Spacecraft level effect of this failure mode. If separate effects are listed for different mission phases, their criticality is entered separately.

o. Remarks and Recommendations – Any pertinent comments or references are included.

4 FMEA SUMMARY

4.1 Spacecraft Bus Summary

The preliminary Spacecraft Bus FMEA has shown that the majority of the Spacecraft components have sufficient redundancy to ensure the reliable operation of the Spacecraft Bus in meeting the mission objectives. The majority of the Spacecraft equipment failure modes are classified as criticality level 3, loss of redundancy or no effect on the mission.

The preliminary Spacecraft Bus FMEA has identified some failure modes as single point failures. The failure of any one of these items would adversely affect the ability of the Spacecraft to meet the mission objectives. Table I summarizes the Spacecraft Bus single point failures.

Table I. Spacecraft Bus Single Point Failure Summary

Subsystem	Failure Mode No.	Item	Failure Mode
EPS	EPSAD01	SAD stepper motor	Jammed due to bearing failure
EPS	EPSAD02	SAD harmonic drive	Jammed due to bearing failure or gear failure
EPS	EPSAD03	SAD shaft bearing	Jammed bearings
EPS	EPSA06	SA mast longerons and battens	Loss of SA stiffness
PROPS	PRPT01	Propellant tank	Loss of propellant (leakage)
PROPS	PRFL01	Fuel lines	Leakage or rupture of fuel lines
PROPS	PTFF02	Fuel filter	External leakage due to weld failure.
SMS		SA deployments	See SMS for details

4.2 Instruments Summary

Some of the individual Instrument FMEAs were not received in time to be included with this version of the Spacecraft FMEA. Some of the Instrument FMEAs which were received did not supply enough level of detail to access the impact to the Spacecraft. The following paragraphs briefly summarize the Instrument FMEAs which were received.

MISR FMEA – Did not receive.

MOPITT FMEA – Did not receive.

MODIS FMEA, dated 9/92 – The MODIS FMEA was very preliminary, major updates to the design are anticipated. The FMEA only addressed failure impacts to the MODIS science mission. No definitive effects stated for the Spacecraft. Some criticality level 1 failure modes were identified, these were mostly shorts at the interface which would result in the loss of MODIS. There were no definitive effects to the Spacecraft.

ASTER FMEA, dated 3/93 – The ASTER FMEA was very preliminary and there was not much detail. There were no definitive effects to the Spacecraft.

CERES FMEA, dated 5/92 – The CERES FMEA was a relatively detailed analysis. The instrument to Spacecraft interfaces were addressed.

> The FMEA stated that there could be some shorts to ground failure modes of the CERES power bus which would require Spacecraft circuit protection to preclude damage.
>
> The FMEA also postulated a failure mode where the ability to turn off the survival heaters would be lost. this would result in a possible violation of the heat transfer limit across the interface.
>
> The FMEA also accounted for some structural failures as criticality level 1.

5 SPACECRAFT BUS SUBSYSTEM FMEAS

This section describes each of the individual subsystem FMEAs.

The FMEA failure mode numbers followed the following format:

XXYYYZZ where

a. **XX** is the subsystem identifier

b. **YYY** is the equipment identifier

c. **ZZ** is the sequential failure mode identifier

Table II shows the abbreviations used for the FMEA failure modes numbers

Table II. FMEA Failure Mode Identifiers

Subsystem	Component	Description
EP		EPS
	SR	Slip Ring Assembly
	SA	Solar Array Assembly
	SSU	Switched Shunt Unit
	SAD	Solar Array Drive
	ADE	Array Drive Electronics
	PDU	Power Distribution Unit
	BAT	Battery Assembly
	BPM	Batter Pressure Monitor
	BPC	Battery Power Conditioner
PR		PROPS
	PT	Propellant tank
	SV	Service valve
	FL	Fuel line
	FF	Fuel Filter
	LV	Latch valve
	REA	Rocket Engine Assembly
	TC	Thermal Control equipment
	PT	Pressure transducer
	PME	PMEA
CD		C&DHS
	SCC	Spacecraft Controls Computer

Table II. FMEA Failure Mode Identifiers (Continued)

Subsystem	Component	Description
	CTI	Command/Telemetry Interface Unit
	BDU	Bus Data Unit
	SFE	Science Formatting Equipment
	SSR	Solid State Recorder
CM		COMMS
	HGA	High Gain Antenna Assembly
	MOD	KSA modulator
	SBT	S–Band Transponder
	SB	S–Band Interface Unit
	ANT	Omni antenna
	DAS	Direct Access Service
GN		GN&CS
	RWA	Reaction Wheel Assembly
	IRU	Inertial Reference Unit
	MTR	Magnetic Torquer Rod
	CSS	Coarse Sun Sensor
	ACE	Attitude Control Electronics
	SST	Solid State Star Tracker
	FSS	Fine Sun Sensor
	TAM	Three Axis Magnetometer
	ESA	Earth Sensor Assembly
	PSU	Power Switching Unit
TC		TCS
	CP	CPHTS
	EM	Equipment Module
	MIS	Miscellaneous
SM		SMS
	HGA	High Gain Antenna Assembly
	SA	SA deployment

5.1 Electrical Power Subsystem (EPS) FMEA

5.1.1 Description

The EPS provides all Spacecraft instruments and subsystem housekeeping equipment with +120 VDC ±4% power (at the user) during all mission phases. The EPS is modular to facilitate integration and ground test, and is designed to provide single–fault tolerance and a high level of redundancy.

The EPS provides the functions of energy generation, energy storage, power conversion, regulation, and distribution. The EPS utilizes a fully–regulated direct–energy–transfer (DET) configuration at +120 VDC, which transfers power directly from the source to the loads with a minimum of losses and without any intermediate power conversion. This results in a system which is both light–weight and efficient, while providing ±4% regulation (at the user) for all loads. The EPS is required to provide 5.0 kW end–of–life (EOL) average, of which 2.53 kW is allocated to operate all electrical loads, and 2.47 kW is available to recharge the batteries while sunlit.

Power is generated by a single–wing photovoltaic solar–cell array which rotates via a solar array drive (SAD) in order to maximize solar exposure. Power for Spacecraft operation during eclipse is stored in two rechargeable 50 ampere–hour NiH_2 batteries. During the eclipse phase, (32.7 to 34.8 minutes), the batteries provide power to operate the Spacecraft loads via the battery power conditioners (BPCs), which combine discharge regulator and charge regulator functions in the same converter. During the sunlit portion of the orbit, (66.2 to 64.1 minutes), the BPCs charge the batteries, transforming energy from the +120 volt bus voltage level to the current required by the batteries. Excess solar array power is shunted via a sequential shunt unit (SSU).

The Spacecraft main power bus uses a star–radial power distribution at +120 VDC via a single central distribution point in the power distribution unit (PDU) feeding subsidiary power distribution points in the various equipment modules. The central power point at the PDU is double insulated from the box chassis and the Spacecraft ground. By design, double insulation requires two hard credible failures to result in loss of a central power point and, therefore, the likelihood of this occurring is extremely remote.

The bus voltage is regulated and controlled via the power control function performed by the PDU. The effects of transient loads on voltage regulation is minimized through the use of a bus capacitor bank located at the bus regulation point in the PDU. Each capacitor in the PDU main capacitor bank is fused. Equipment module and subsystem component main power, including batteries and solar array, is returned to a central point in the PDU which is then referenced to the Spacecraft prime power reference (PPR). The EPS provides intermittent duty switch power to two pyro busses for firing the pyrotechnic actuators on the Spacecraft at the beginning of the mission.

Ground command and on–board computer control of the EPS elements is effected through the C&DHS via the Spacecraft control computer (SCC). The power management software calculates battery charge rates based on battery depth–of–discharge, desired C/D ratio, and solar array/sun orientation. In addition, this software will perform load shedding, based upon a predefined schedule, in the event of a failure or an excessive overload that would exceed the maximum battery depth of discharge of 30% for the normal operational mode.

5.1.2 Functional Block Diagram

The EPS functional block diagram is shown in Figure 3.

5.1.3 Reliability Block Diagram

The EPS reliability block diagram is shown in Figure 4.

The SSU reliability block diagram is shown in Figure 5.

The PDU reliability block diagram is shown in Figure 6.

The Battery Assembly reliability block diagram is shown in Figure 7.

5.1.4 Subcontractor FMEAs

The SAA subcontractor (TRW) has suppled a preliminary FMEA for the SAA. The results of this analysis were included in the EPS and SMS FMEAs.

5.1.5 Summary of Findings

The preliminary EPS FMEA has identified a total of 37 failure modes for both the pre–operational and the operational mission phases.

There are 4 failure modes which have been determined to have criticality level 1 and are single point failures. These failure modes are shown in Table III.

Table III. EPS Criticality Level 1 Failure Modes

Failure Mode No.	Item	Failure Mode
EPSAD01	SAD stepper motor	Jammed due to bearing failure
EPSAD02	SAD harmonic drive	Jammed due to bearing failure or gear failure.
EPSSAD03	SAD shaft bearings	Jammed bearings
EPSA06	SA Mast Longerons and Battens	Loss of SA stiffness.

The remaining failure modes were determined to have a criticality level of 3.

5.1.6 Failure Modes Studied

A summary of the failure modes which were studied is shown in Table IV.

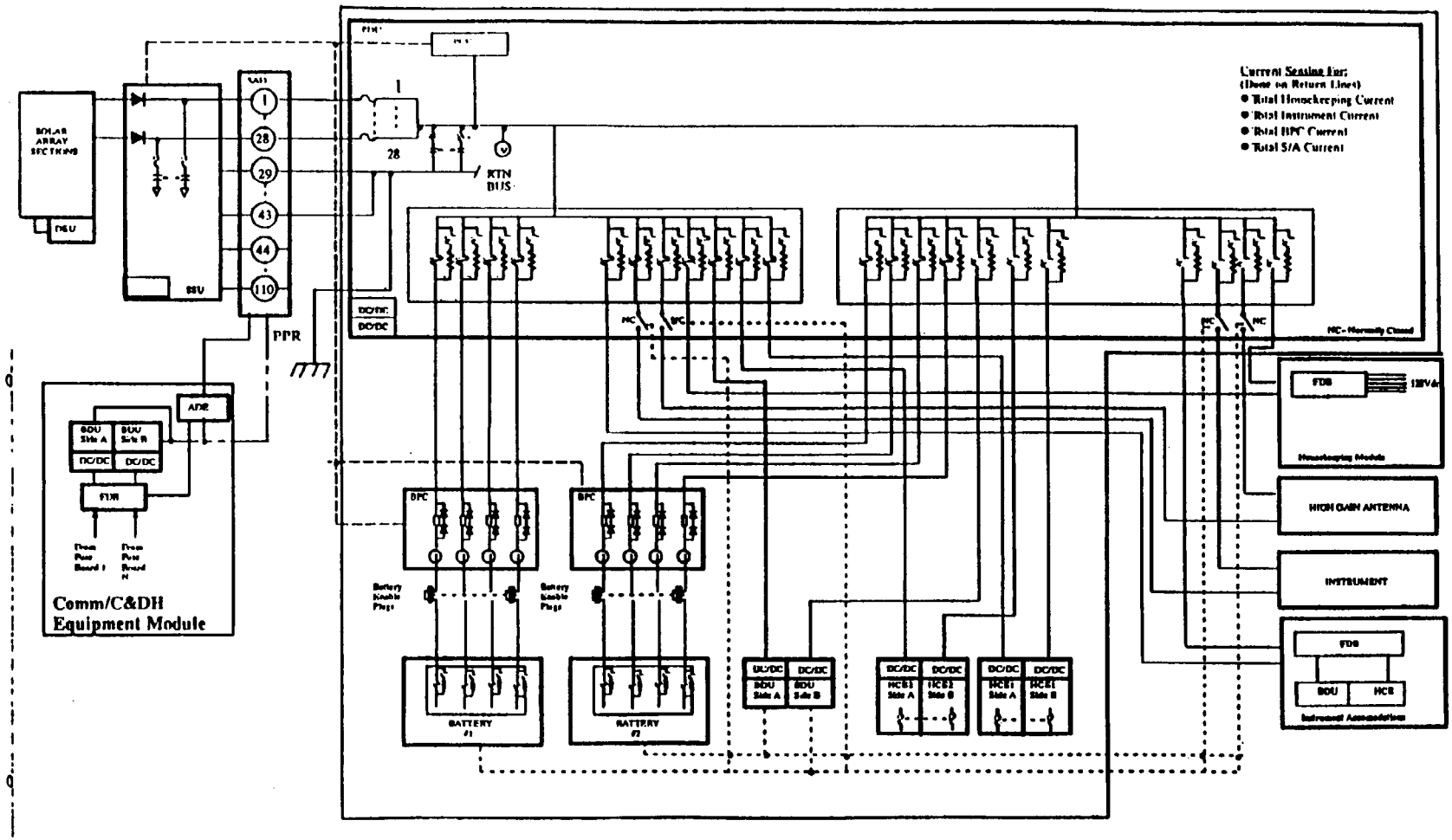

Figure 3. EPS Functional Block Diagram

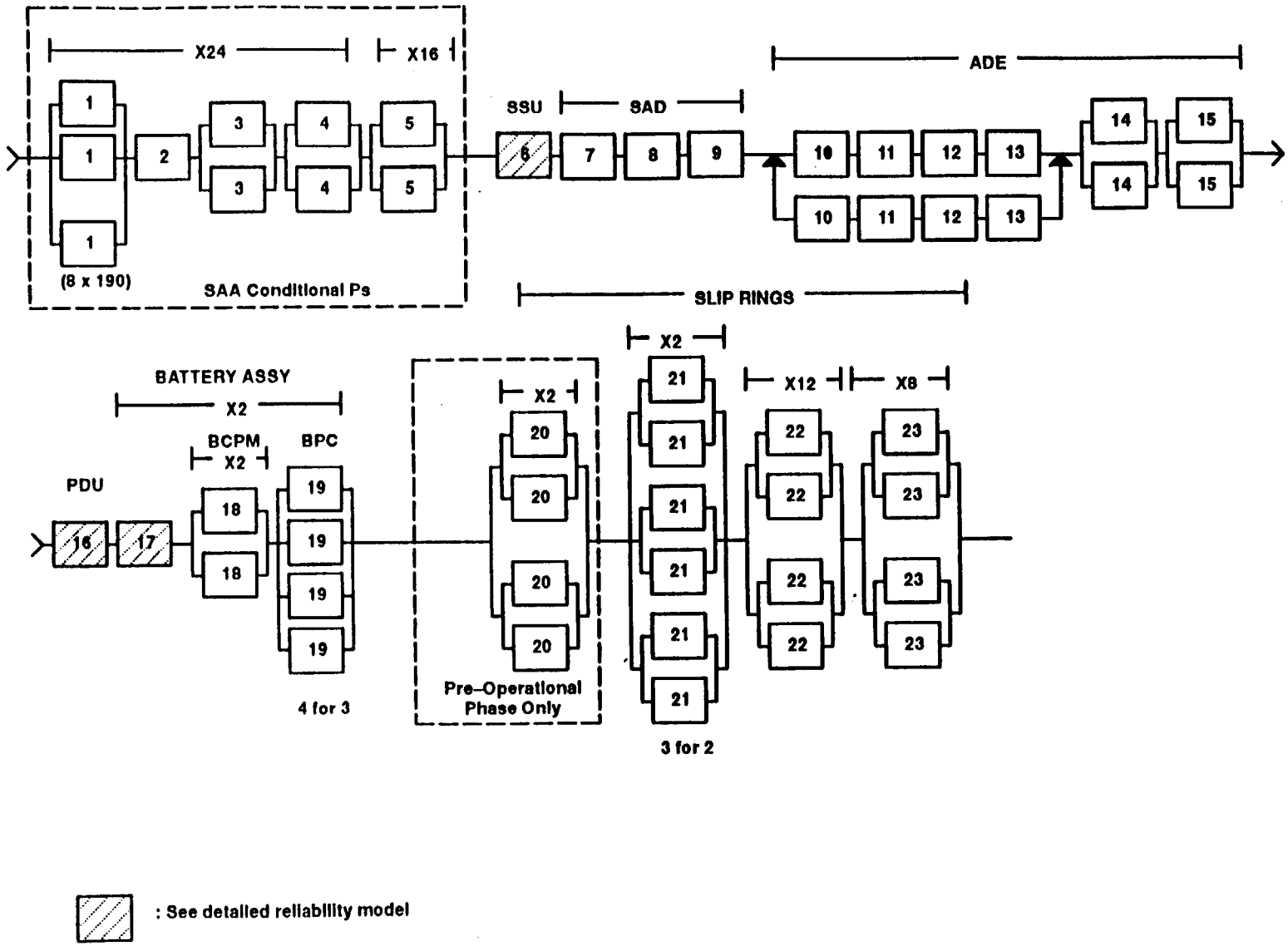

Figure 4. EPS Reliability Block Diagram

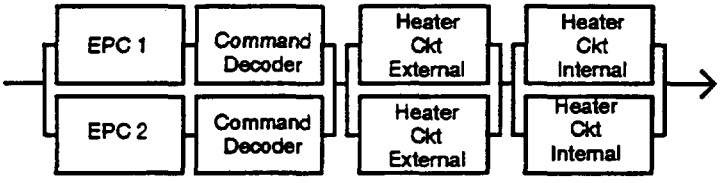

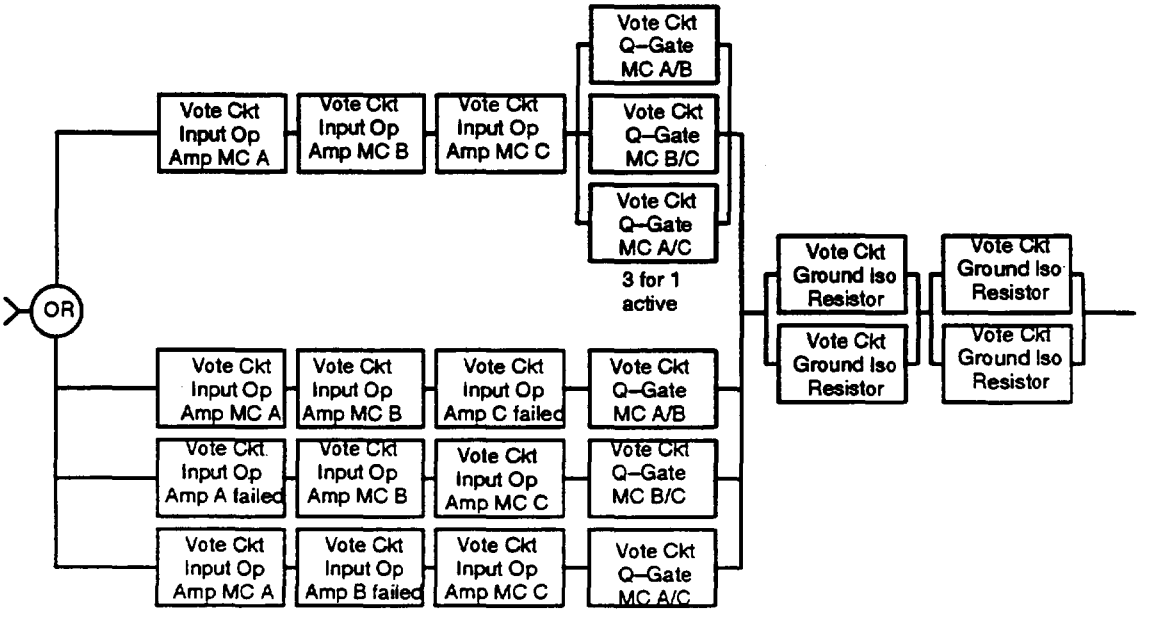

Figure 5. SSU Reliability Block Diagram

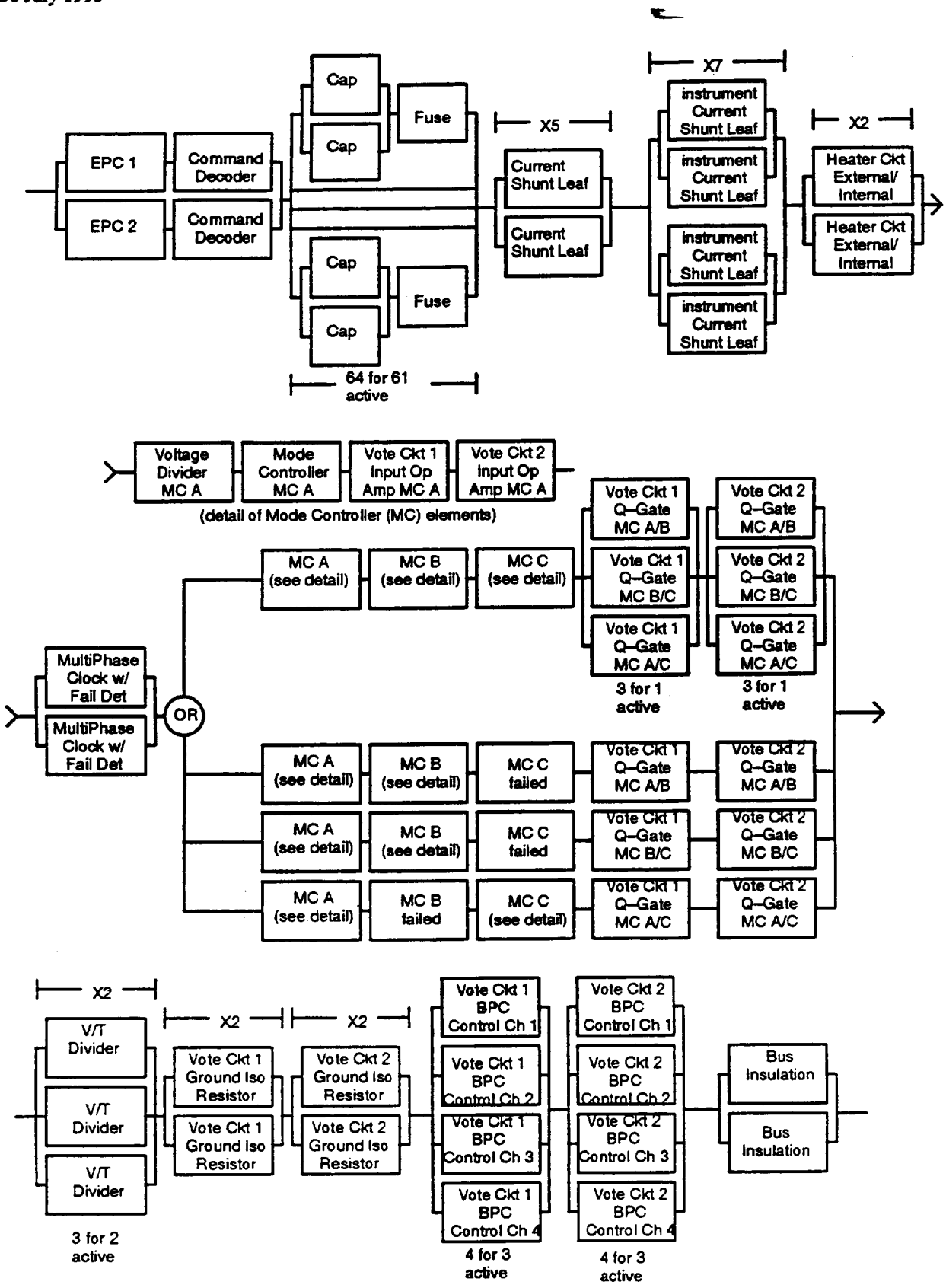

Figure 6. PDU Reliability Block Diagram

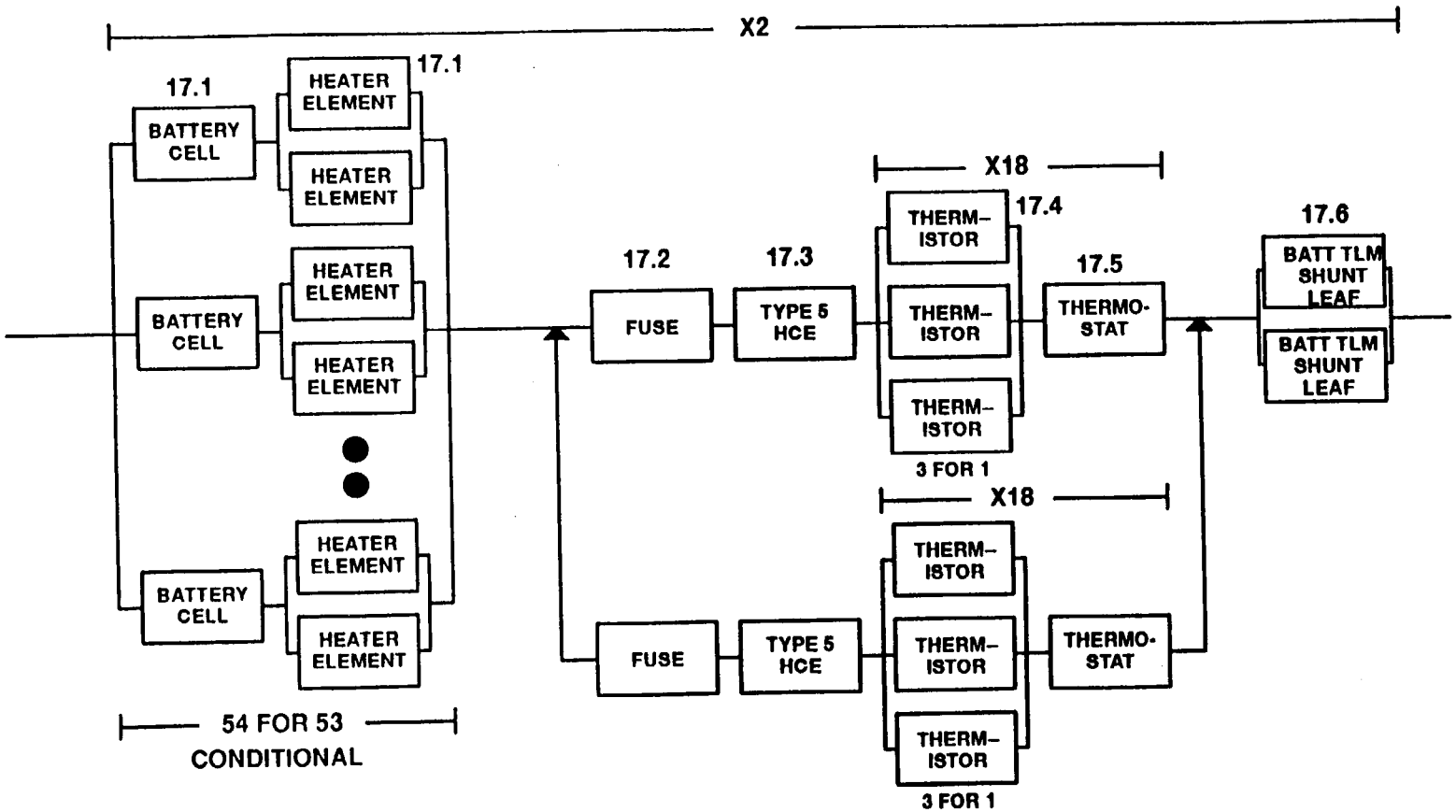

Figure 7. Battery Assembly Reliability Block Diagram

Table IV. EPS Failure Modes

Component	Failure Mode
Slip Ring Assy	Brush not in contact with slip ring
SAA	Loss of output
SAA	Shunt failed short or power module failed short
SAA	Loss of connection
SAA	Longerons deform or batten separates from lattice
SSU	Loss of output
SAD	Bearing failure
SAD	Gear failure
ADE	Loss of output
ADE	Open winding
PDU	Loss of output
PDU	Bus shorted
Batt Assy	Shorted cell/Open cell
Batt Assy	Diode short
Batt Assy	Switch failure
Batt Assy	Cell not operating in thermal range
BPM	Loss of output
BPC	Loss of output

5.1.7 FMEA Worksheets

The individual FMEA worksheets for the EPS are shown in Appendix I.

5.2 Propulsion Subsystem (PROPS) FMEA

5.2.1 Description

The PROPS is divided into primary and redundant branches with fully redundant Propulsion Module Electronics Assemblies (PMEAs), attitude control thrusters, and latching valves. Functionally redundant and cross–strapped delta–V thrusters are utilized to meet all EOS orbit acquisition and maintenance requirements. All subsystem commands are received by the PMEA which provides signal conditioning and control functions required to drive the thrusters, heater circuits, and latching valves. Power conditioned from 120 V to 28 V is provided to each PMEA which directs and controls power distribution to all subsystem components.

The subsystem is comprised of a single 40.6–x–33.8 inch spheroidal propellant tank with a maximum capacity of 760 lb_m, twelve attitude control thrusters, four delta–V thrusters, two service valves, a pair of latching isolation valves, two filters, and a pressure transducer. An elastomeric

diaphragm within the tank expels propellant by providing a separation barrier between the pressurant and hydrazine fuel. Individual servicing of propellant and pressurant is achieved via separate and dedicated service valves. This tank and manifold configuration permits loading and unloading of the subsystem in either a vertical or horizontal positions. Engine half–systems are interconnected by a cross–coupling manifold, which makes available the full propellant load to either set of thrusters. Latching valves can are utilized to isolate the thrusters from a particular propellant source, if necessary, and to provide a third inhibit to propellant leakage. The all welded subsystem manifold is constructed of both titanium and stainless steel to minimize the required number of transition tubes.

A thermal balance method is utilized to provide an extremely accurate estimate of fuel remaining and allows periodic updates with increasing accuracy throughout Spacecraft life. This non–intrusive application of the existing thermal control and telemetry subsystems is based on the change in temperature of the tank and fuel system over a given period of time. Since propellant mass is the only variable in the tank/fuel system following pressurization lockout, the specific heat of the system is directly related to propellant remaining. Calibration readings are taken of the empty tanks prior to launch and in a fully loaded condition immediately after separation. Propellant gauging accuracies will vary from 3% of the system capacity at BOL to 0.1% at one year before tank depletion is scheduled to occur. Two additional methods are provided to supply a redundant estimation of remaining propellant, the pressure–volume–temperature (PVT) method and the book–keeping method.

The PMEA provides signal conditioning and control functions required to drive the monopropellant thrusters, heater circuits, and latching valves from standard interface circuits provided by the BDU and the serial input of the ACE interface. The PMEA also provides the signal conditioning required to convert output level signals from temperature sensors and pressure transducers associated with the Propulsion Subsystem into standard analog voltage signals compatible with the BDU interface circuits.

The Electrical Power Conditioners receive primary and redundant 120 V fused power and return feeds from the 120 V fuse distribution boxes. Electrical isolation shall be maintained between the redundant feeds. The EPC's output interfaces directly to the 28 V FDBs before being distributed to propulsion module components.

The EPCs and some of the thermal control components are technically part of the EPS and the TCS but are included as part the propulsion module. In the Spacecraft FMEA these components are included with the PROPS calculations because a failure of one of these components would directly impact the operation of the PROPS.

5.2.2 Functional Block Diagram

The propulsion module functional block diagram is shown in Figure 8.

The propulsion subsystem schematic is shown in Figure 9.

5.2.3 Reliability Block Diagram

The propulsion subsystem reliability block diagram is shown in Figure 10.

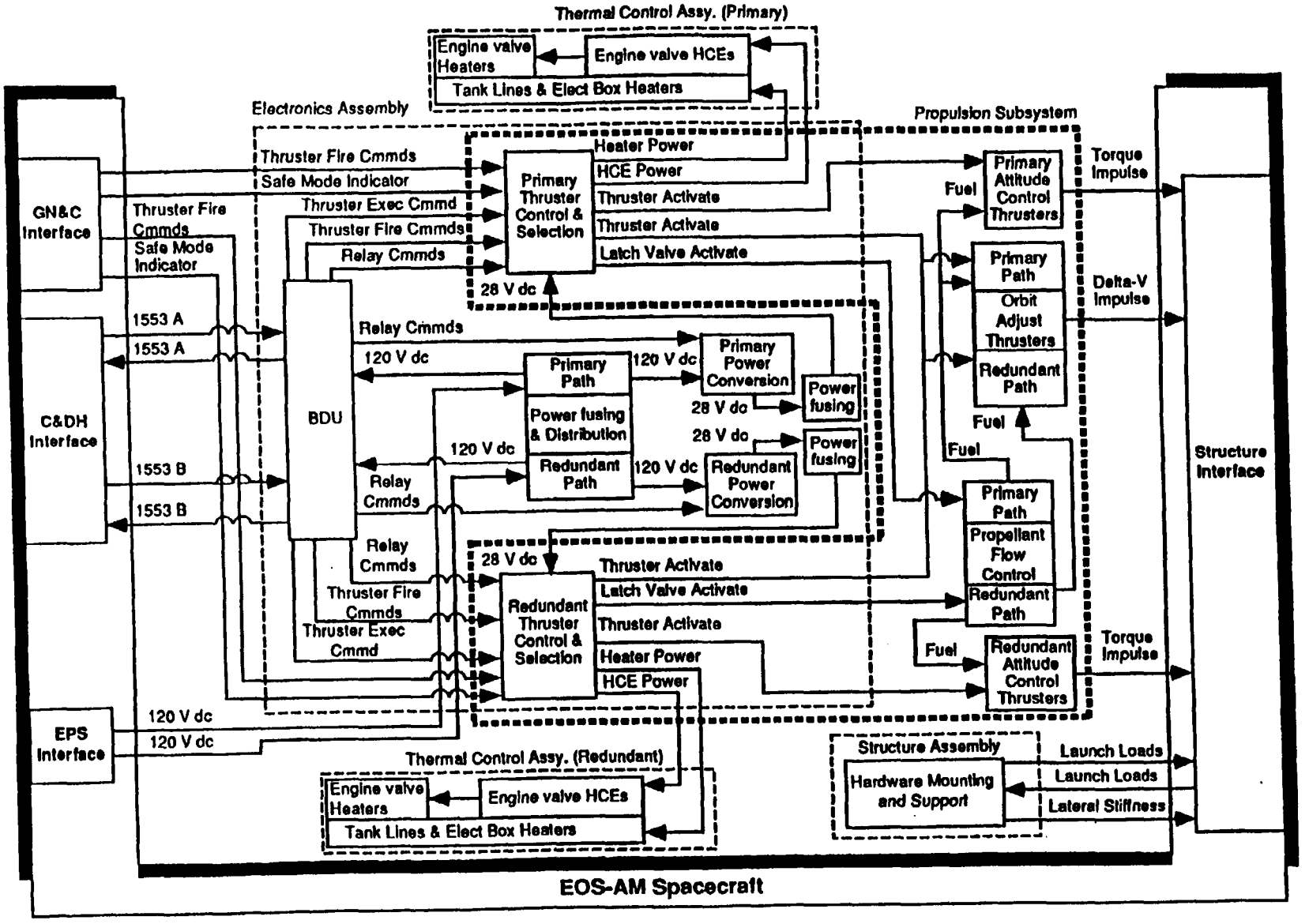

Figure 8. Propulsion Module Functional Diagram

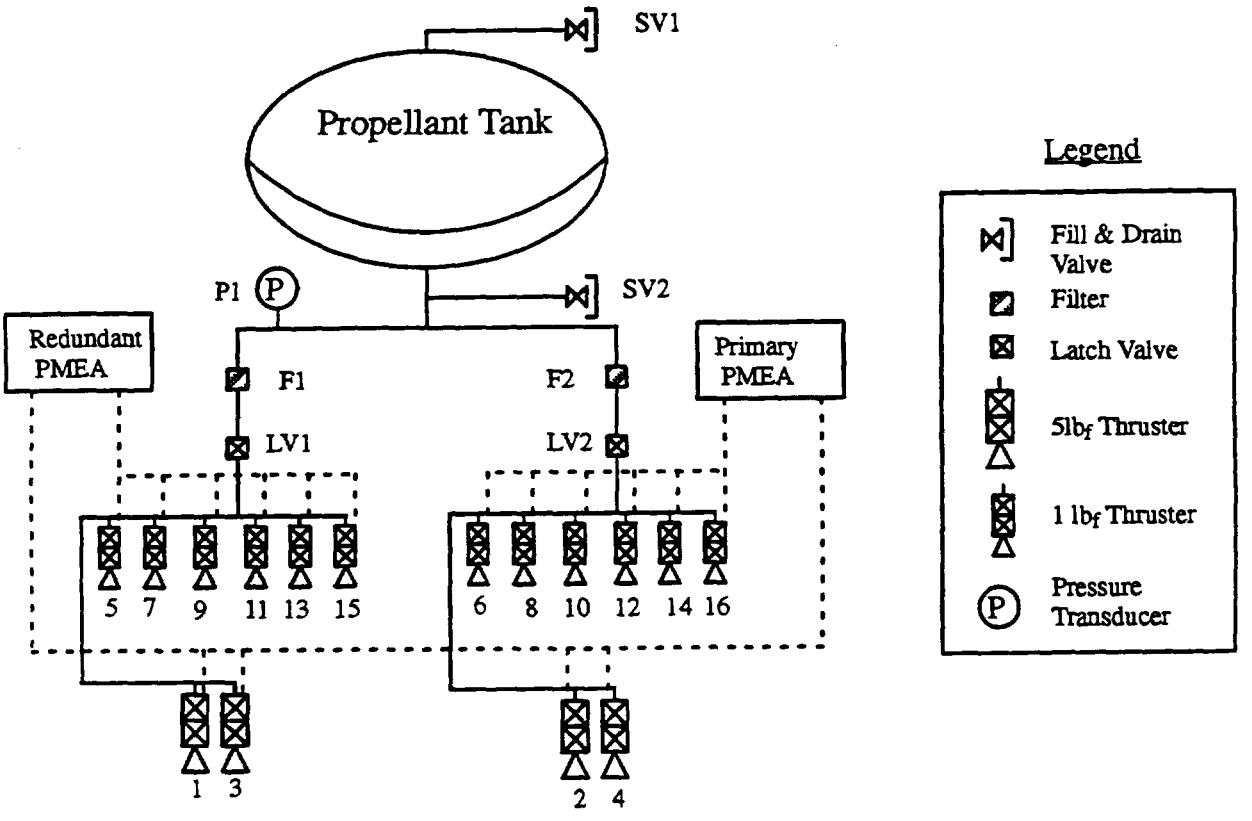

Figure 9. Propulsion Subsystem Schematic

5.2.4 Subcontractor FMEAs

There were no subcontractor FMEAs used for this PROPS FMEA.

5.2.5 Summary of Findings

The preliminary PROPS FMEA has identified a total of 14 failure modes for both the pre–operational and the operational mission phases.

There are 3 failure modes which have been determined to have criticality level 1 and are single point failures. These failure modes are shown in Table V.

Table V. PROPS Criticality Level 1 Failure Modes

Failure Mode No.	Item	Failure Mode
PRPT01	Propellant tank	Loss of propellant
PRFL01	Fuel lines	Leakage or rupture of fuel lines
PRFF02	Fuel filters	External leakage due to weld failure

The remaining failure modes were determined to have a criticality level of 3.

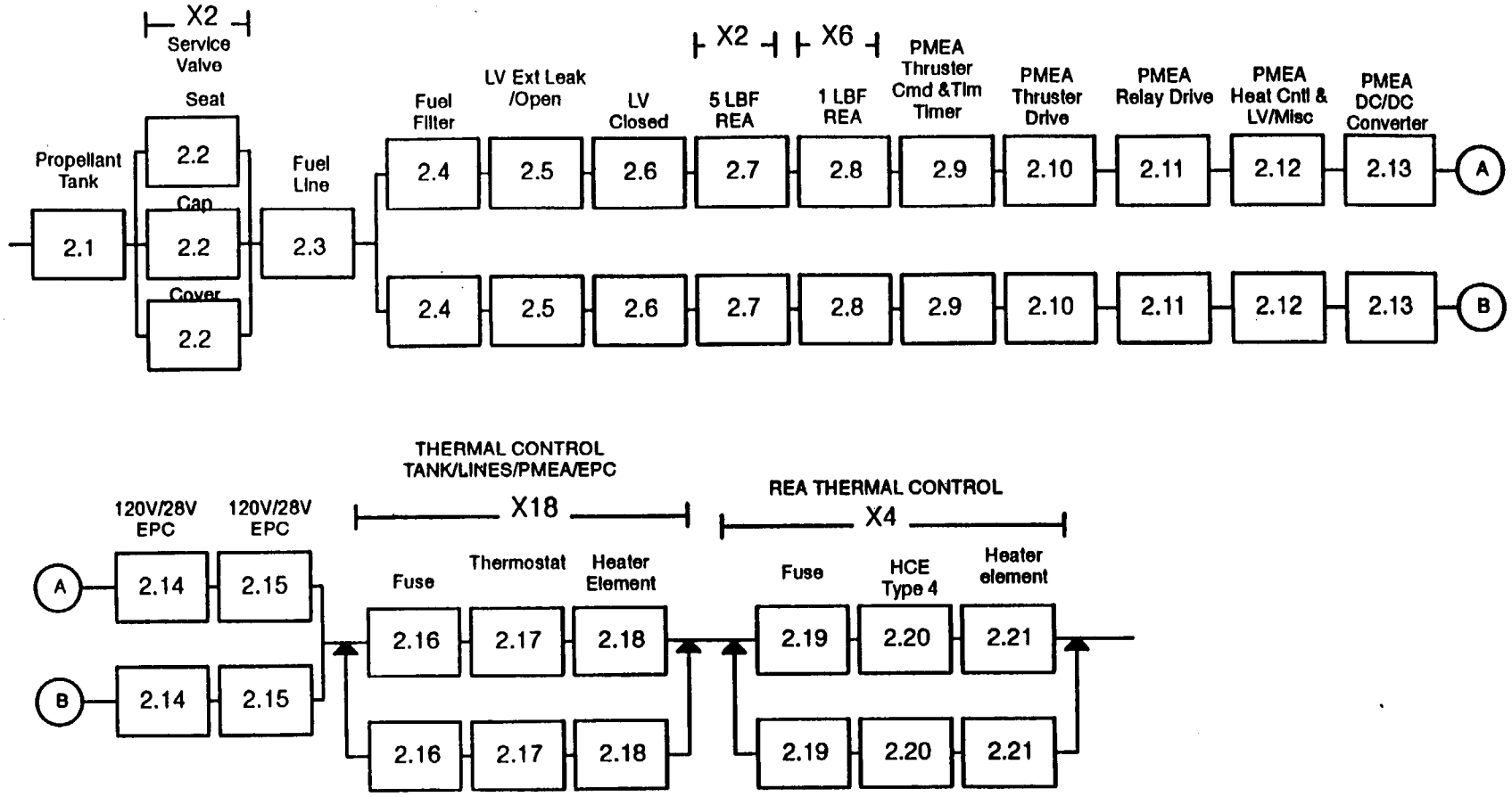

Figure 10. Propulsion Subsystem Reliability Block Diagram

5.2.6 Failure Modes Studied

A summary of the failure modes which were studied is shown in Table VI.

Table VI. PROPS Failure Modes

Component	Failure Mode
Propellant Tank	Loss of propellant
Propellant tank heaters	Failure to maintain required temperatures
Service valve	Leakage of propellant
Fuel lines	Loss of propellant
Line heaters	Loss of propellant due to downstream of cold point
Fuel filter	Loss of propellant supply to thrusters
Latch valve	Failure to open/close or external leakage
REAs	Loss of REA thrust capability
Thermal control	Loss of ability to maintain component temperatures above the freezing point
Pressure transducer	Loss of propellant pressure monitoring
PMEA	Loss of the ability to command thrusters and other PM components
120V/28V EPC	Loss of power

5.2.7 FMEA Worksheets

The individual FMEA worksheets for the PROPS are shown in Appendix II.

5.3 Command and Data Handling Subsystem (C&DHS) FMEA

5.3.1 Description

The command and data handling subsystem (C&DHS) provides onboard computing resources to accomplish Spacecraft control and digital communications in support of inter-module, intra-subsystem, and inter-subsystem data traffic. It is responsible for the baseband handling of all uplinked command data transfers received from the communication subsystem (COMMS) and for coordinating the telemetering of all Spacecraft and instrument-generated data to be downlinked through the COMMS or hard–lines.

There are a number of services the C&DHS provides to subsystem components and instruments to accomplish control and communications. These services include:

a. Distribution of realtime and stored commands generated on the ground or by the onboard software.

b. The periodic collection of Spacecraft Bus telemetry and instrument housekeeping telemetry and the formatting of these data for transmission to the ground and the onboard software.

c. The gathering, formatting, multiplexing, and recording of multiple streams of packetized instrument Science Data.

d. The generation and distribution of the synchronization service, standard time service, and precise time service

e. The onboard communication of digital data between and among the distributed hardware and software components of Spacecraft subsystems and between Spacecraft subsystems and instruments.

f. Providing the processing and software resources required for the execution and storage of the programs and data belonging to the onboard subsystems.

g. The input and output of data from/to subsystem sensors/effectors and instruments, including appropriate signal conditioning and conversion of signals between the analog and digital domains.

h. Accepting the SCC–based Flight Software Subsystem prepared and formatted ancillary data message, then replicating and delivering the ancillary data message to the onboard instruments and transmitting it to the ground for ground system use.

The major components of the C&DH subsystem and their primary function are listed in Table VII. Control of most Spacecraft functions is provided by redundant Spacecraft Controls Computers (SCCs) that are part of the C&DH subsystem. The SCCs are nominally configured as one active and the other as cold–standby. However, the Spacecraft can operate with both SCCs powered–on for diagnostic operations. The command/telemetry interface unit (CTIU) provides the communication interface for uplinked commands and the housekeeping telemetry. The command and telemetry bus (C&T bus), which is the onboard communication link between the CTIUs, BDUs, and instruments, is a redundant serial data bus. The SCCs utilize the controlling CTIU for Spacecraft command distribution and receives C&T bus data gathered by the CTIU. On each bus, one CTIU (active) acts as the bus controller (BC), the other CTIU (hot standby) acts as a remote terminal, and all other nodes are configured as remote terminals (RTs). The bus data units (BDUs), residing near instruments and within housekeeping equipment modules, provide the monitoring and control services to their associated instruments or Spacecraft components. Standardized input/output (I/O) circuit modules interface the BDUs to sensors, effecters, and other units.

Dedicated point–to–point data links carry high–rate instrument data to the Science Formatting Equipment (SFE). The SFE generates formatted science data for the realtime links and for storage within the Solid State Recorder (SSR). The SFE routes the data to the appropriate destination. A separate bus, the low–rate science bus, handles low–rate instrument data. The SFE is the BC on the low–rate science bus while the instruments and the CTIUs are RTs.

Table VII. C&DHS Major Components

Subsystem Component	Qty	Major Function
Spacecraft Controls Computer (SCC)	2	FSWS software processing resource, only one powered
Command and Telemetry Interface Unit (CTIU)	2	Central component for Spacecraft commanding and telemetry generation, only one active
Bus Data Unit (BDU)-Housekeeping	6	Interface to housekeeping equipment for command distribution and telemetry gathering from/to the CTIU
Bus Data Unit (BDU)-Propulsion	1	Interface to Propulsion Module for command distribution and telemetry gathering from/to the CTIU
Bus Data Unit (BDU)-instrument	3	Provides point-to-point interfaces for critical and configuration type commands and telemetry
Science Formatting Equipment (SFE)	1	Receives, multiplexes, formats, and routes science and housekeeping packets
Solid State Recorder (SSR)	2 DCU 2 DMU	Storage of housekeeping data for anomaly resolution Storage of formatted frames prior to playback to SFE

5.3.2 Functional Block Diagram

The C&DH subsystem is distributed throughout the EOS–AM Spacecraft with interfaces to all other subsystems and to the instruments. The functional block diagram of the C&DH subsystem components showing how they are distributed about the Spacecraft is shown in Figure 11.

The SCC functional block diagram is shown in Figure 12.

The CTIU functional block diagram is shown in Figure 13.

5.3.3 Reliability Block Diagram

The C&DH subsystem reliability block diagram is shown in Figure 14.

The Housekeeping BDU reliability block diagram is shown in Figure 15.

The Instrument BDU reliability block diagram is shown in Figure 16.

The Propulsion Module BDU reliability block diagram is shown in Figure 17.

5.3.4 Subcontractor FMEAs

The SCC subcontractor (Honeywell) has suppled a preliminary FMEA for the SCC. The results of this analysis were included in the C&DHS FMEA.

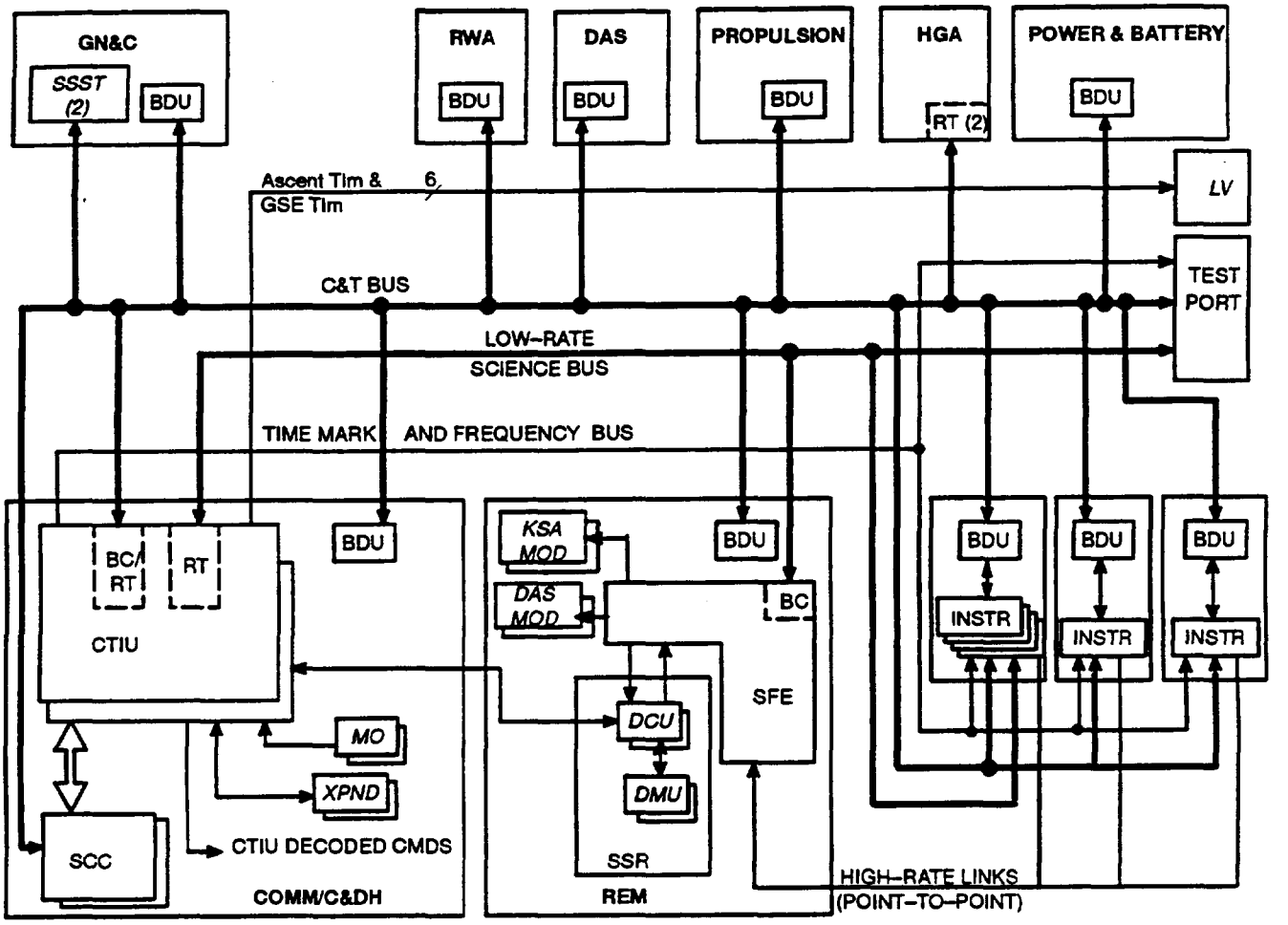

LEGEND

BC	= MIL-STD-1553B Bus Controller	*MO*	= Master Oscillator
BDU	= Bus Data Unit	*MOD*	= Modulator
C&T	= Command & Telemetry	*KSA*	= Ku-band Single Process
CTIU	= Command and Telemetry Interface Unit	REM	= Recorder Equipment Module
DAS	= Direct Access System (Comm)	RT	= MIL-STD-1553B Remote Terminal
DCU	= Data Control Unit	RWA	= Reaction Wheel Assembly
DMU	= Data Memory Unit	SCC	= Spacecraft Controls Computer
GN&C	= Guidance Navigation and Control	SFE	= Science Formatting Equipment
GSE	= Ground Support Equipment	SSR	= Solid State Recorder
HGA	= High Gain Antenna	SSST	= Solid State Star Tracker
H/K	= Housekeeping	TLM	= Telemetry
INSTR	= instrument	*XPND*	= S-band Transponder
LV	= Launch Vehicle		

NOTE: All busses are redundant
Italics : Non-C&DHS Equipment
BOLD : Equipment Module

MIL-STD-1553B BUS

Indicates number of components

Figure 11. Command and Data Handling Subsystem Block Diagram

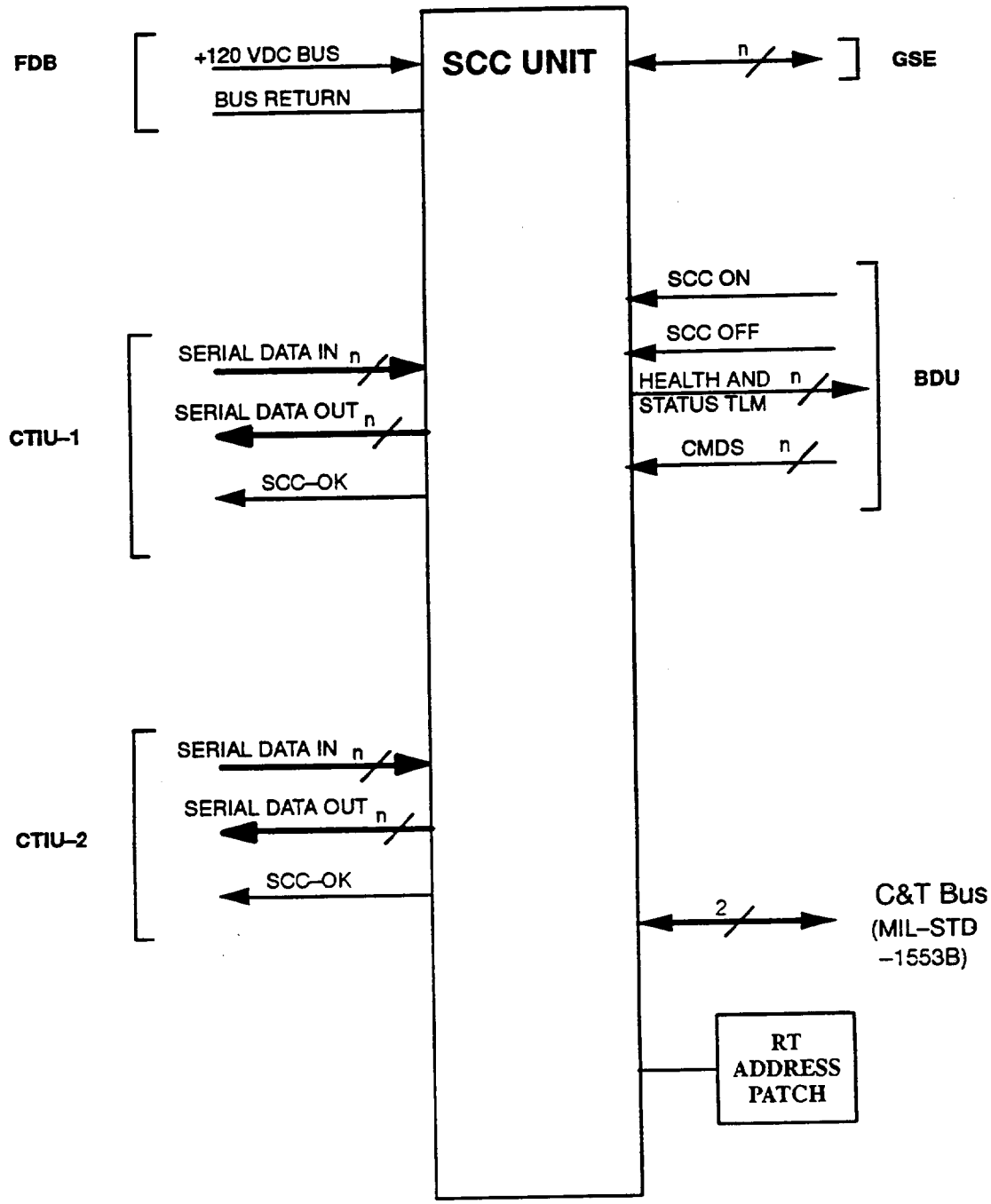

Note: Only one of the two onboard SCCs is shown.

Figure 12. SCC Functional Interface Diagram

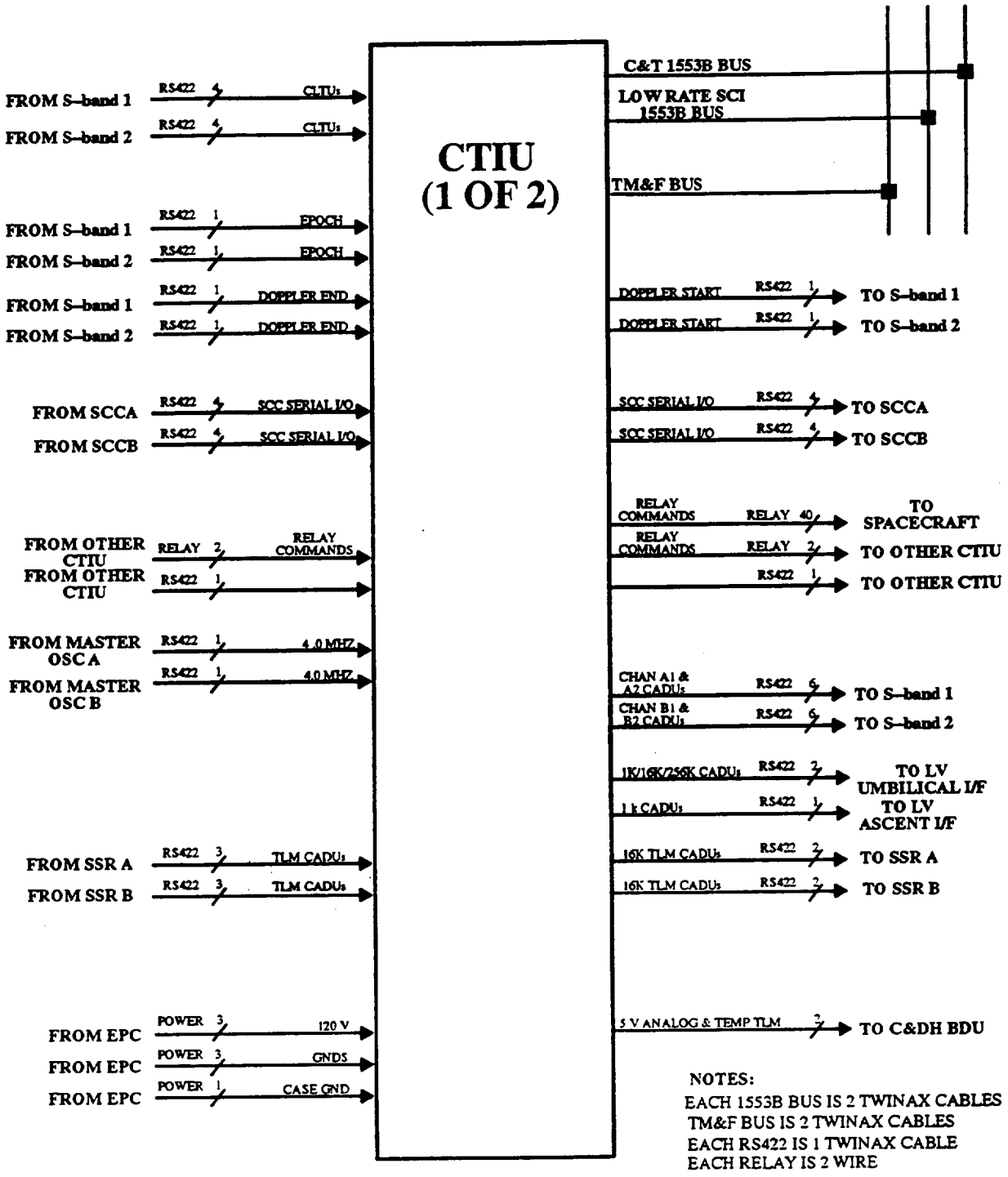

Figure 13. CTIU Electrical Interfaces

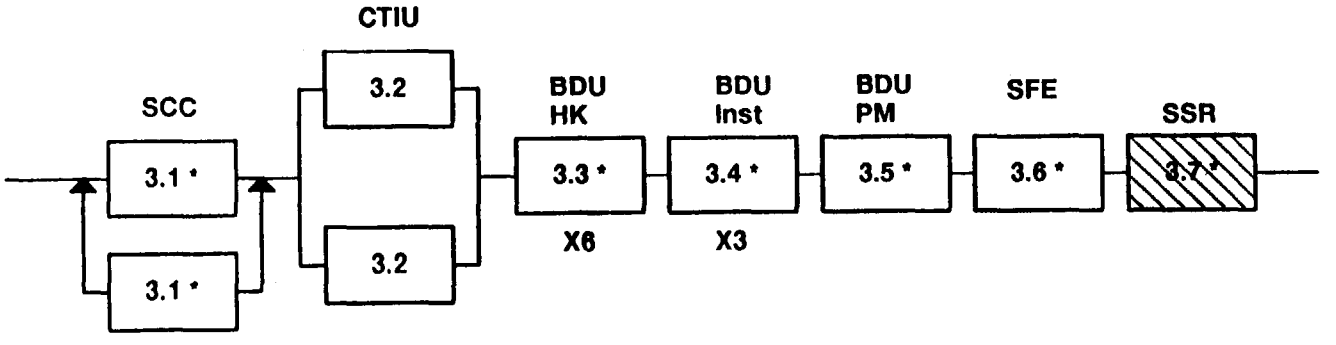

Note: * = Includes lowel level redundancy

: Not required for the pre-operational mission phase

Figure 14. C&DH Subsystem Reliability Block Diagram

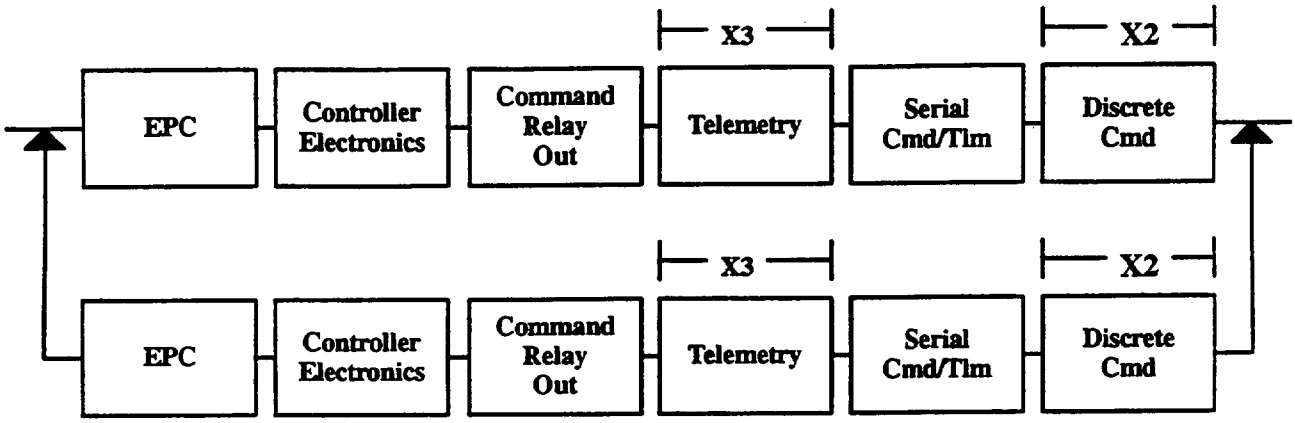

Figure 15. Housekeeping BDU Reliability Block Diagram

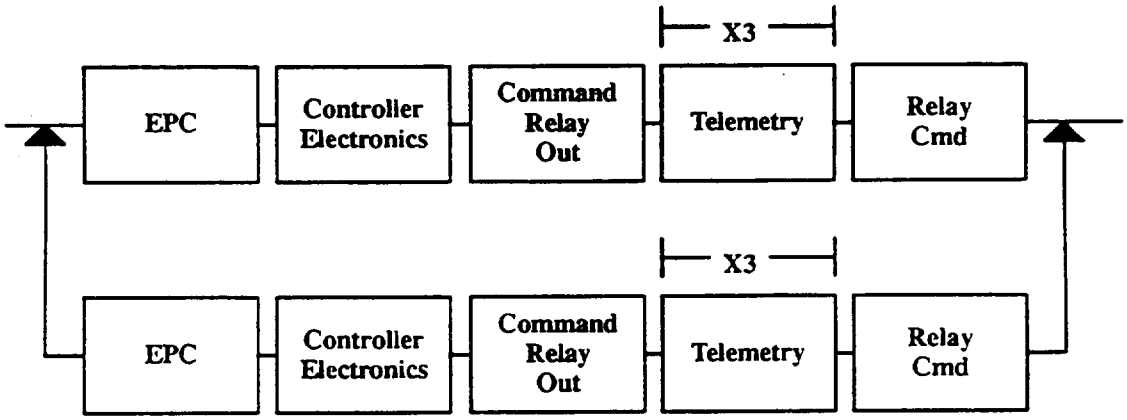

Figure 16. Instrument BDU Reliability Block diagram

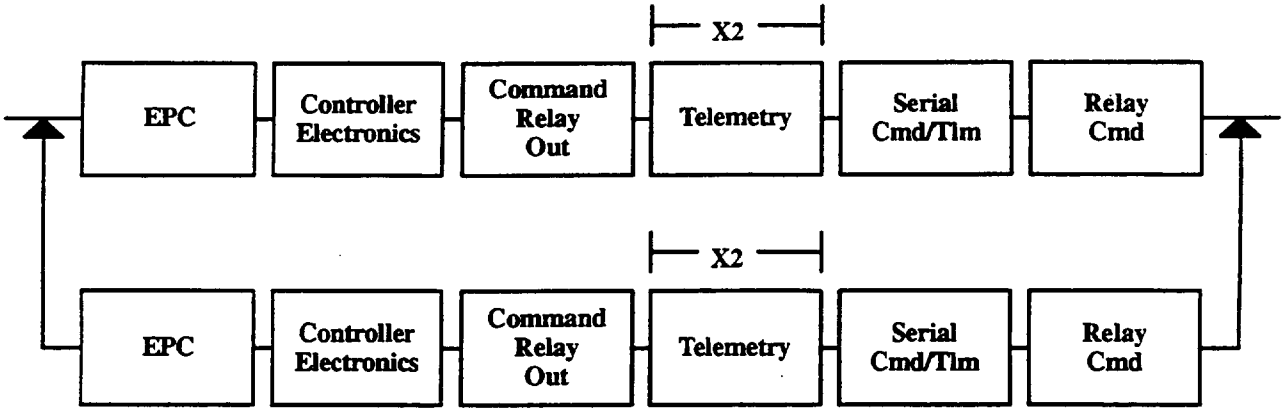

Figure 17. Propulsion Module BDU Reliability Block Diagram

5.3.5 Summary of Findings

The preliminary C&DHS FMEA has identified a total of 16 failure modes for both the pre–operational and the operational mission phases.

All of the failure modes were determined to have a criticality level of 3.

5.3.6 Failure Modes Studied

A summary of the failure modes which were studied is shown in Table VIII.

Table VIII. C&DHS Failure Modes

Component	Failure Mode
SCC	Loss of ancillary data
CTIU	Loss of uplink data routing
CTIU	Loss of downlink data collection
CTIU	Loss of command distribution from the SCC
CTIU	Loss of time generation and synchronization
BDU	Loss of command execution
BDU	Loss of telemetry gathering capability
SFE	Loss of the ability to receive and route data streams
SFE	Loss of the ability to route data streams to the appropriate destination
SSR	Loss of the ability to store housekeeping telemetry
SSR	Loss of the ability to store science data

5.3.7 FMEA Worksheets

The individual FMEA worksheets for the C&DHS are shown in Appendix III.

5.4 Communications Subsystem (COMMS) FMEA

5.4.1 Description

5.4.1.1 Communications Links and Link Parameters

Communications subsystem links between the EOS Spacecraft and external elements are shown in Figure 18. The links satisfy the functional requirements for high–rate science data downlink, Spacecraft engineering data downlink, command and control uplink, and navigation support.

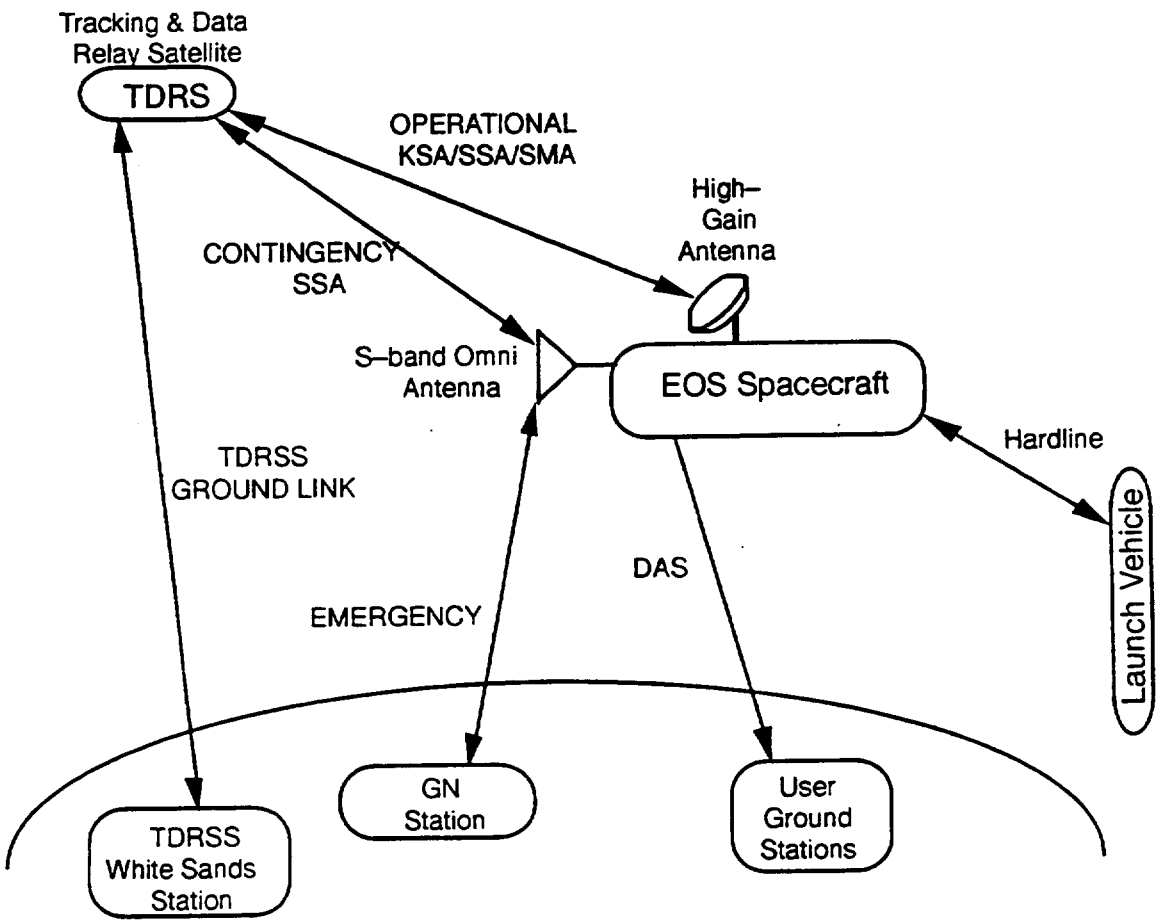

Figure 18. Communications Subsystem: Links

The communication links utilize several services of the TDRSS:

a. KSA return service for science data downlink,

b. SSA and SMA return service for engineering downlink,

c. SSA and SMA forward service for commands and

d. SSA and SMA forward service for autonomous navigation.

In addition, the communications subsystem supports a direct to user science data downlink, direct access services (DAS), and a ground network (GN) link can be established to support emergency operations.

5.4.1.2 Communications Services

The communications subsystem supports the EOS Spacecraft housekeeping functions by providing command reception, telemetry transmission and navigation services. Transmission of telemetry and reception of commands will be primarily supported through the Tracking and Data Relay Satellite System (TDRSS). If the TDRSS becomes unavailable, backup command and telemetry functions will be accommodated through the use of the GN. Primary navigation functions will be supported via the use of the TDRSS onboard navigation system (TONS). Should TONS support become unavailable, then the TDRSS based S–band tracking support function will be utilized as the backup navigation source. Direct downlink services will also be included which will provide direct to user science data and also act as a backup to the TDRSS science data return link function. The communications subsystem will support an interface for command functions through the launch vehicle umbilical for prelaunch checkout.

To accommodate the above objectives, the communications subsystem will include Ku–band, X–band and S–band equipment.

The Ku–band equipment will provide the following functions:

a. Modulate and transmit one single 150 Mbps data channel via the TDRSS KSA telemetry Return link.

b. Provide open loop pointing of the HGA in response to commands from the C&DH subsystem.

The S–band equipment will provide the following functions:

a. Receive and demodulate the SSA and SMA Forward link signals transmitted by the TDRSS including the ranging channel.

b. Provide for S–band two way turn–around ranging as well as one way Doppler tracking functions compatible with the TDRSS.

c. Modulate and transmit baseband telemetry data on the TDRSS SSA and SMA Return links.

d. Receive and demodulate the GN command uplink signals excluding the ranging channel.

e. Modulate and transmit baseband telemetry data on the GN telemetry downlink.

f. Perform Doppler extraction on the TDRSS forward link and time tag the data for processing by the C&DH subsystem.

g. Detect the PN code epoch on the TDRSS forward link and time tag the event for Spacecraft clock calibration processing by the C&DH subsystem.

5.4.2 Functional Block Diagram

The communications subsystem functional block diagram is shown in Figure 19.

5.4.3 Reliability Block Diagram

The communications subsystem reliability block diagram is shown in Figure 20.

5.4.4 Subcontractor FMEAs

The HGA subcontractor (SPAR) and the S–band transponder subcontractor (Motorola) have suppled preliminary FMEAs. The results of this analyses were included in the COMMS FMEA.

5.4.5 Summary of Findings

The preliminary COMMS FMEA has identified a total of 24 failure modes for both the pre–operational and the operational mission phases.

All of the failure modes were determined to have a criticality level of 3.

5.4.6 Failure Modes Studied

A summary of the failure modes which were studied is shown in Table IX .

5.4.7 FMEA Worksheets

The individual FMEA worksheets for the COMMS are shown in Appendix IV.

5.5 Guidance, Navigation & Control Subsystem (GN&CS) FMEA

5.5.1 Description

The GN&C subsystem provides for the determination and control of the EOS Spacecraft attitude, orbit, and appendage articulation. The subsystem must support a wide range of Spacecraft system operating modes, providing normal, and backup pointing modes. The subsystem must also support propulsive operations for orbit adjust and boost modes.

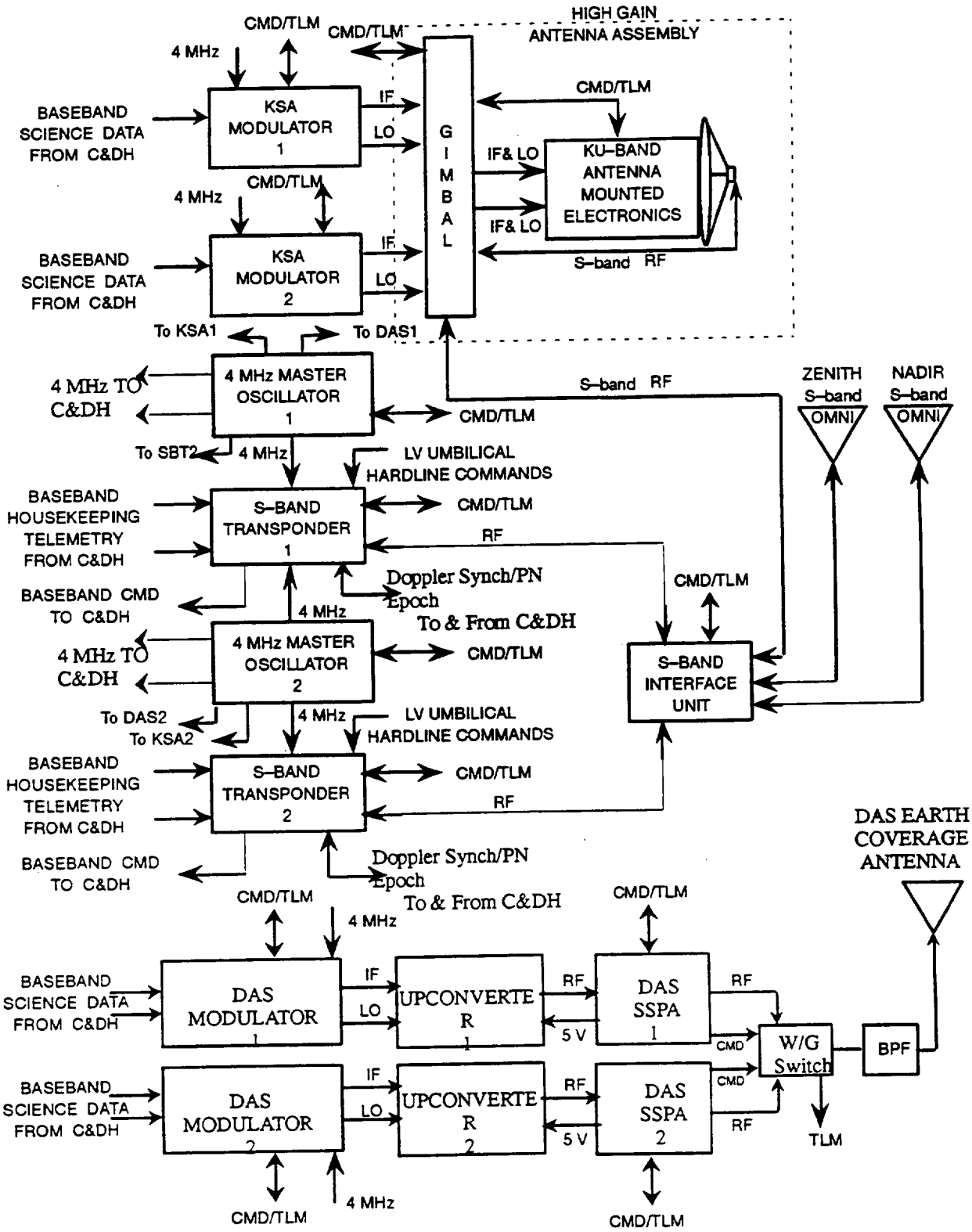

Figure 19. Communications Subsystem Functional Block Diagram

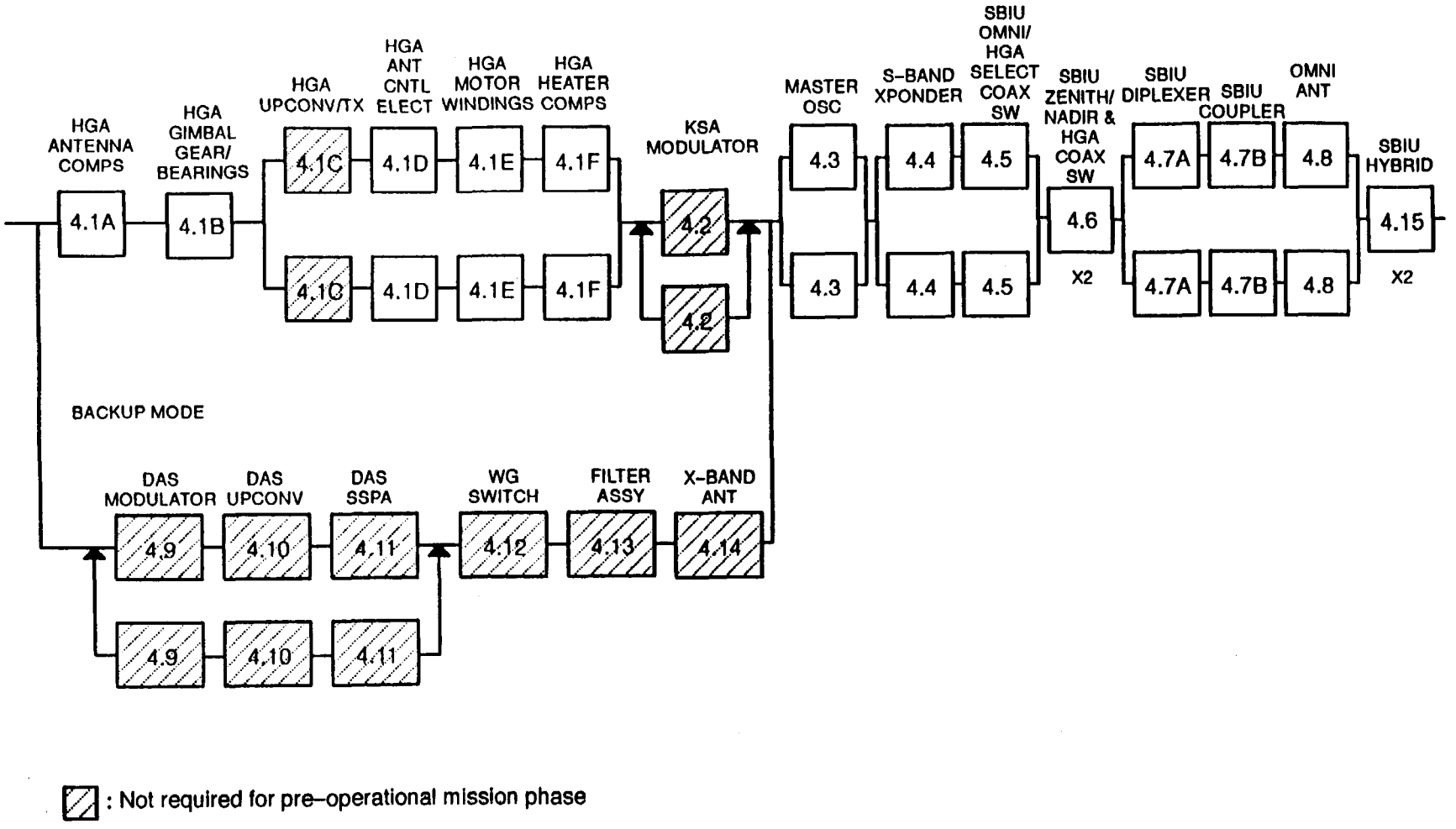

: Not required for pre–operational mission phase

Figure 20. Communications Subsystem Reliability Block Diagram

Table IX. COMMS Failure Modes

Component	Failure Mode
HGA	Loss of signals
HGA	Loss of pointing capability
HGA	Loss of output
HGA	Loss of IF or LO signals
HGA	Loss of HGA drive capability
HGA	Loss of HGA drive control
KSA modulator	Loss of output
MO	Loss of output
S–Band Transponder	Loss of output
SBIU	Loss of output
Omni antenna	Loss of signals
DAS	Loss of output

Thrusters are used to perform all slew maneuvers, including earth acquisition and reacquisition. Four reaction–wheel assemblies (RWAs) are used for primary attitude control. Three magnetic torque rods are used for momentum unloading. The pointing and navigation performance is predicated on parameters affecting atmospheric density being within the indicated limits.

The GN&C subsystem autonomously controls the Spacecraft attitude, and maintains a navigation state vector, which allows attitude knowledge to be provided to instruments. Attitude control and knowledge are referred to the instrument cubes. Attitude control errors and instrument positioning errors differentiate Pointing Accuracy from Pointing Knowledge.

The GN&C subsystem comprises sensors, actuators, an attitude control electronics (ACE), and software. Some components are linked by C&DHS hardware.

Primary sensing is provided by the star tracker for attitude and the inertial reference unit (IRU) for attitude rate. The three–axis magnetometer (TAM) senses the geomagnetic field. Backup attitude sensing is provided by the earth sensor assembly (ESA) for the roll and pitch axes, and by gyrocompassing for the yaw axis. The fine sun sensor (FSS) serves as a back–up sensor for attitude determination if one solid state star tracker (SSST) fails. Primary navigational inputs are from the TDRSS Onboard Navigation System (TONS) with standard TDRSS ground–based orbit determination as backup. TONS estimates EOS Spacecraft position, velocity, drag coefficient, and master oscillator frequency. TONS also supports onboard time maintenance and provides Doppler compensation predicts for the S–band transponder. TONS is dependent upon receiving adequate TDRSS scheduled services.

Primary attitude control is provided by the reaction wheel assemblies (RWAs), with momentum unloading by magnetic torque rods (MTRs). Thrusters within the (propulsion subsystem) provide for backup attitude control and/or momentum unloading, as well as for attitude slewing and velocity corrections.

Most GN&C algorithms are implemented by flight software resident in the C&DH Spacecraft controls computer (SCC). GN&C primary mode functions are accomplished by a fault–tolerant system which includes fault detection, isolation, and recovery (FDIR) capability, using functional and component redundancy. GN&C acquisition modes serve also as backup modes, and enable graceful transition to and from the primary modes, as necessary.

TONS navigation software resides in the SCC. Safe–mode control is implemented via the ACE. The ACE provides coarse attitude control of the EOS Spacecraft in the event of a major C&DH system problem.

The power switching unit (PSU) supplies 28V power to the GN&C subsystem equipment.

5.5.2 Functional Block Diagram

The GN&C subsystem functional block diagram is shown in Figure 21.

The GN&C subsystem electrical interfaces are shown in Figure 22 .

5.5.3 Reliability Block Diagram

The GN&C subsystem reliability block diagram is shown in Figure 23 .

The ACE reliability block diagram is shown in Figure 24.

5.5.4 Subcontractor FMEAs

There were no subcontractor FMEAs used in the GN&CS FMEA.

5.5.5 Summary of Findings

The preliminary GN&CS FMEA has identified a total of 20 failure modes for both the pre–operational and the operational mission phases.

All of the failure modes were determined to have a criticality level of 3.

5.5.6 Failure Modes Studied

A summary of the failure modes which were studied is shown in Table X.

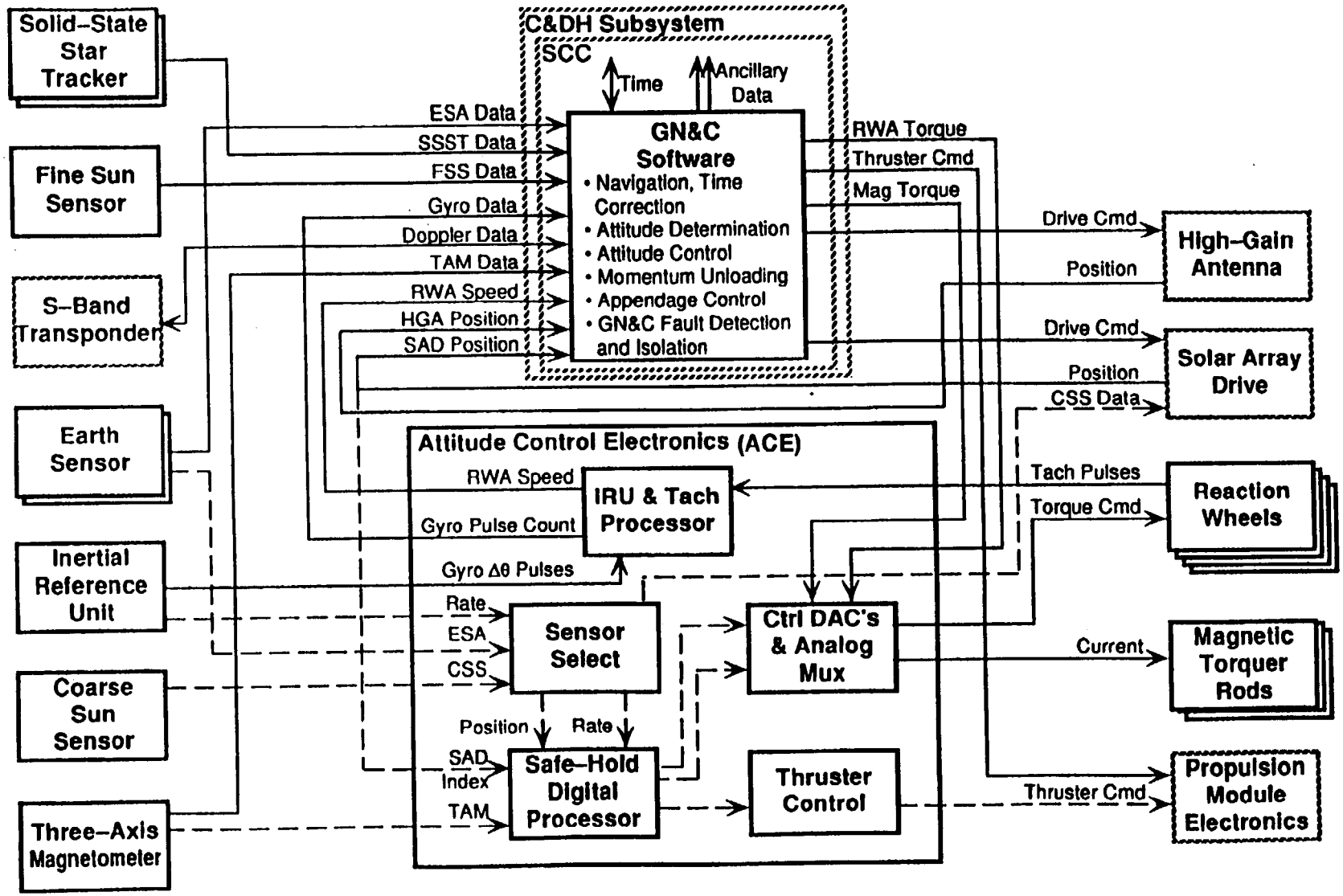

Note: Dashed boxes not part of GN&C subsystem.

Figure 21. GN&C Subsystem Functional Block Diagram

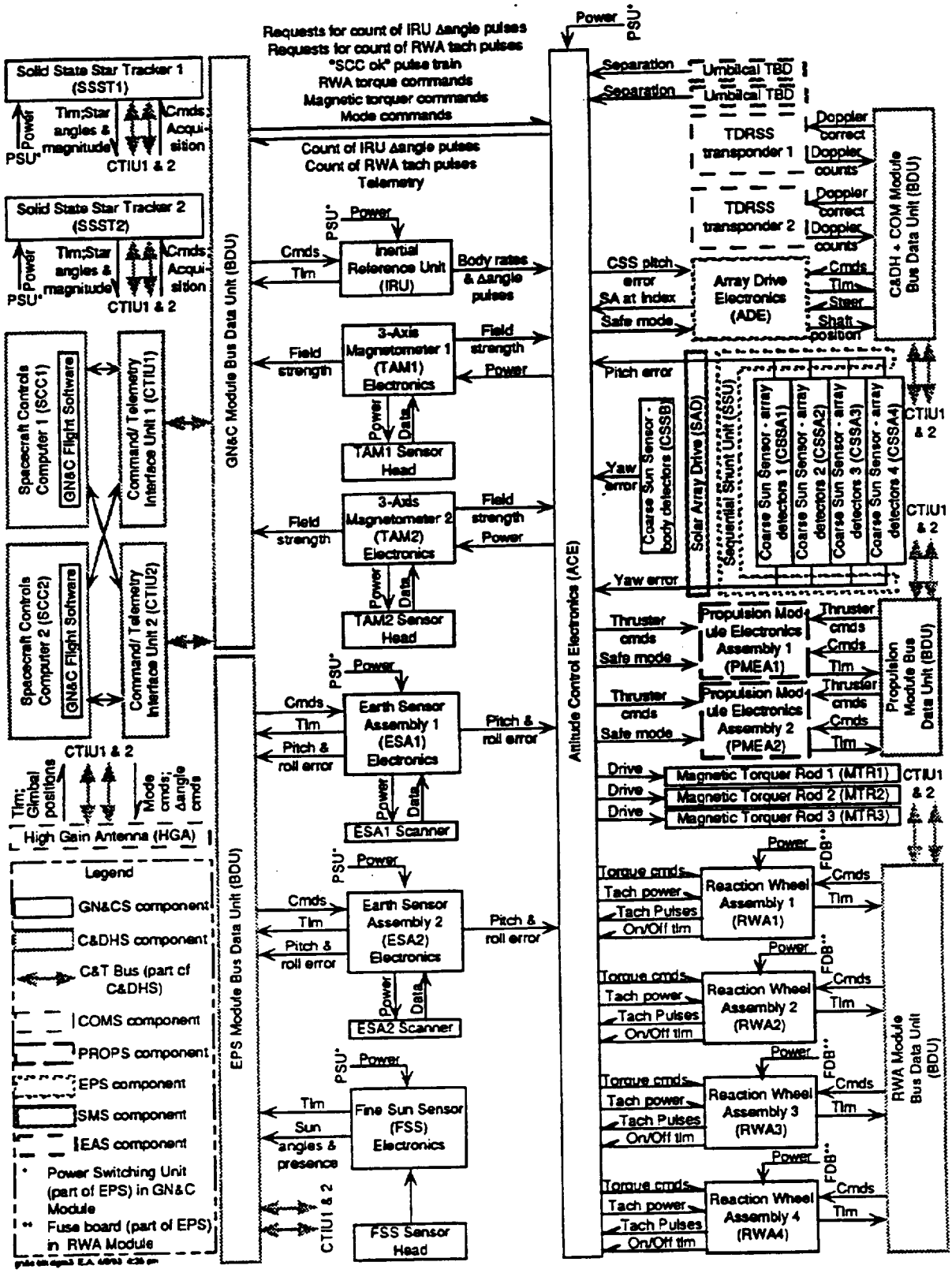

Figure 22. GN&CS Electrical Interfaces

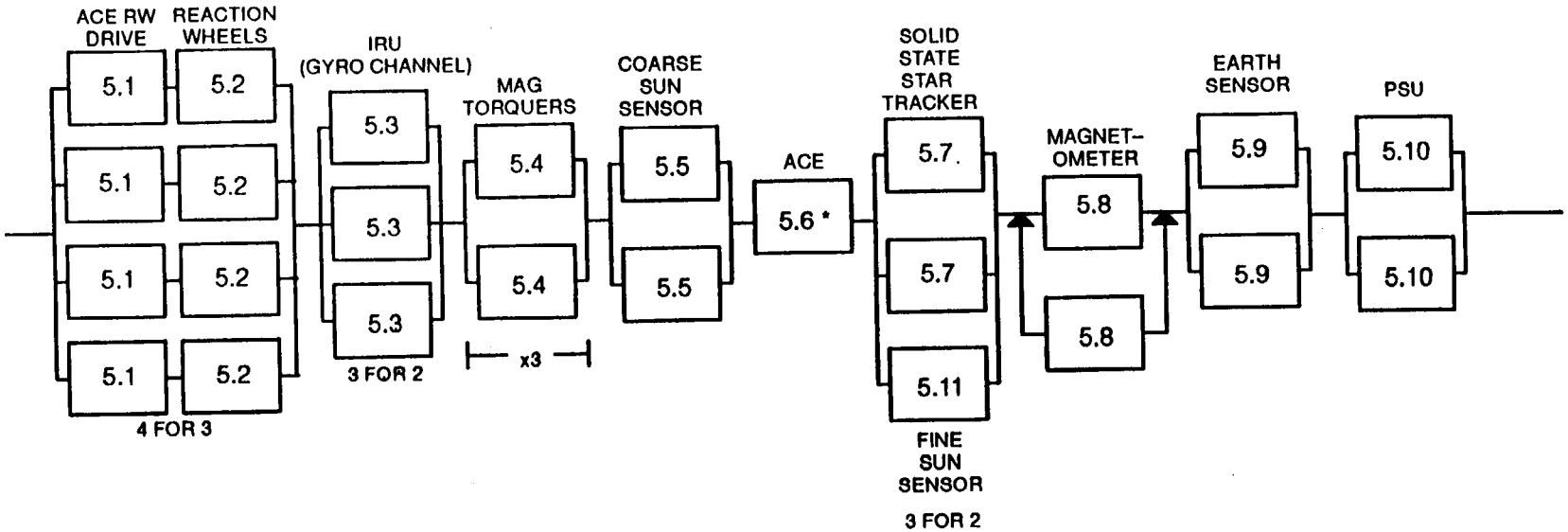

NOTE: * = LOWER LEVEL REDUNDANCY

Figure 23. GN&C Subsystem Reliability Block Diagram

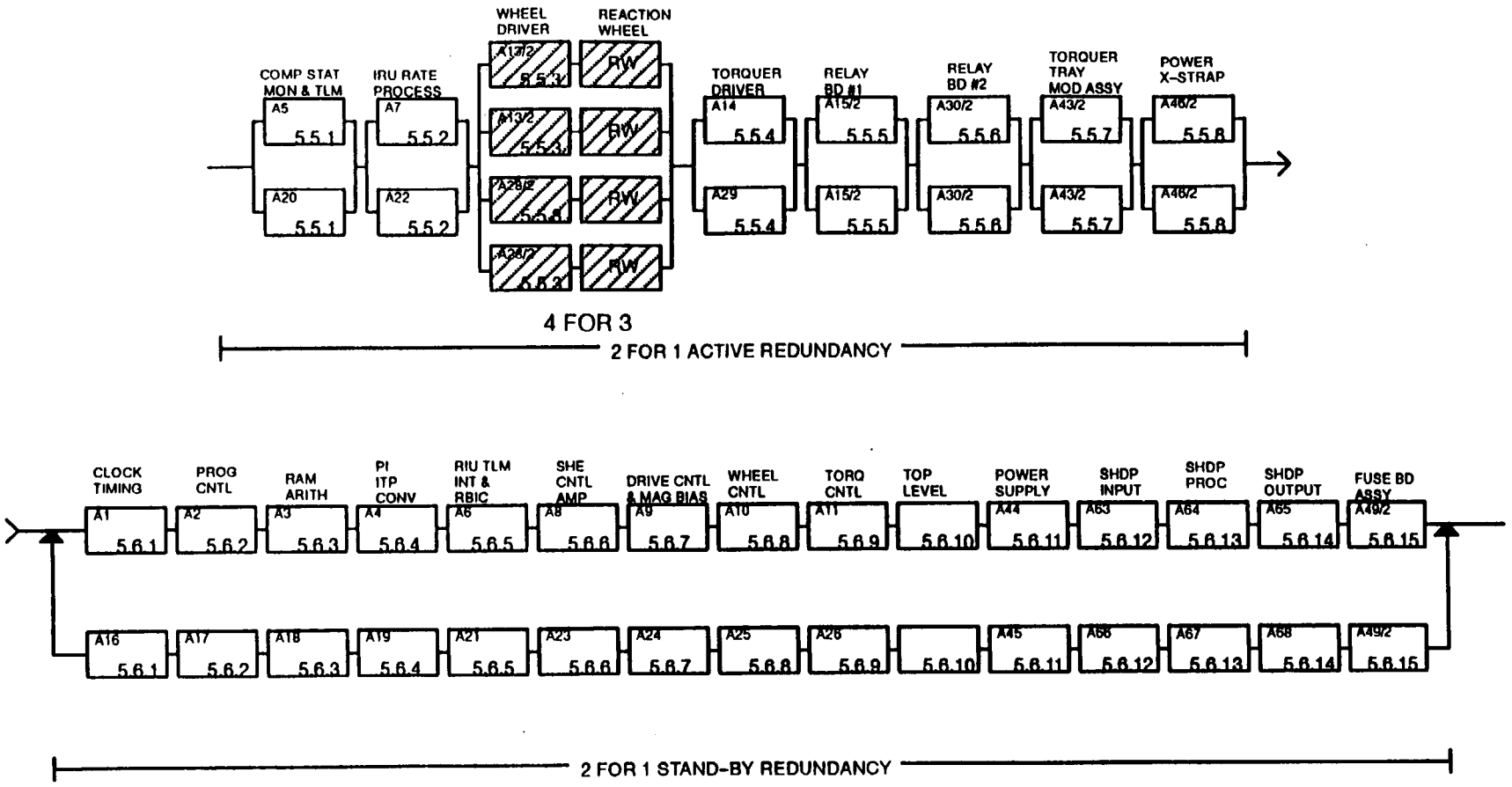

Note: ACE RW driver and the RW are included at the subsystem level

Figure 24. ACE Reliability Block Diagram

Table X. GN&CS Failure Modes

Component	Failure Mode
RWA	Loss of reaction torques
RWA	Loss of tach pulses
IRU	Loss of gyro channel
IRU	Loss of body rates and delta angle pulses
MTR	Loss of magnetic moment
CSS	Loss of output
ACE	Loss of TAM power conditioning
ACE	Loss of RWA power conditioning
ACE	Loss of RWA torque commands
ACE	Loss of IRU tachometer pulse signal processing capability
ACE	Loss of RWA tachometer pulse signal precessing capability
ACE	Loss of RWA control signal processing
ACE	Loss of MTR drive capability
ACE	Loss of Safe Hold capability
ACE	Loss of thruster commands
SSST	Loss of star position and magnitude data
FSS	Loss of sun vector data
TAM	Loss of output
ESA	Loss of output
PSU	Loss of output

5.5.7 FMEA Worksheets

The individual FMEA worksheets for the GN&CS are shown in Appendix V.

5.6 Thermal Control Subsystem (TCS) FMEA

5.6.1 Description

The EOS–AM TCS is required to maintain all Spacecraft components and instrument interfaces within allowable thermal limits throughout all operating and non–operating conditions.

The thermal design philosophy maximizes the use of passive thermal control techniques such as selective conductive couplings, e.g., low conductance standoffs for isolating equipment, and conductive gaskets for equipment requiring good conductive couplings. Selective thermal finishes are also employed for various components/structures, e.g., low emissivity (ε) tape or multilayer insulation (MLI) for radiative isolation, and high emissivity/low absorptivity (α) surfaces (optical

solar reflectors) for radiators. For components/equipment with more stringent requirements, active thermal control methods are employed. A Spacecraft–provided capillary pumped heat transport system (CPHTS) provides thermal control of the instrument interfaces which cannot reject their heat locally from the instrument. Constant conductance heat pipe radiator panels are used to equalize temperature gradients in selected EMs as well as on the CPHTS radiators. Where required, autonomously controlled heaters ensure that minimum temperature requirements are maintained. Heater control electronics and thermostats are used for heater control. Key features of the EOS–AM TCS are shown in Figure 25.

5.6.2 Functional Block Diagram

A functional diagram of the various thermal control methods is shown in Figure 26.

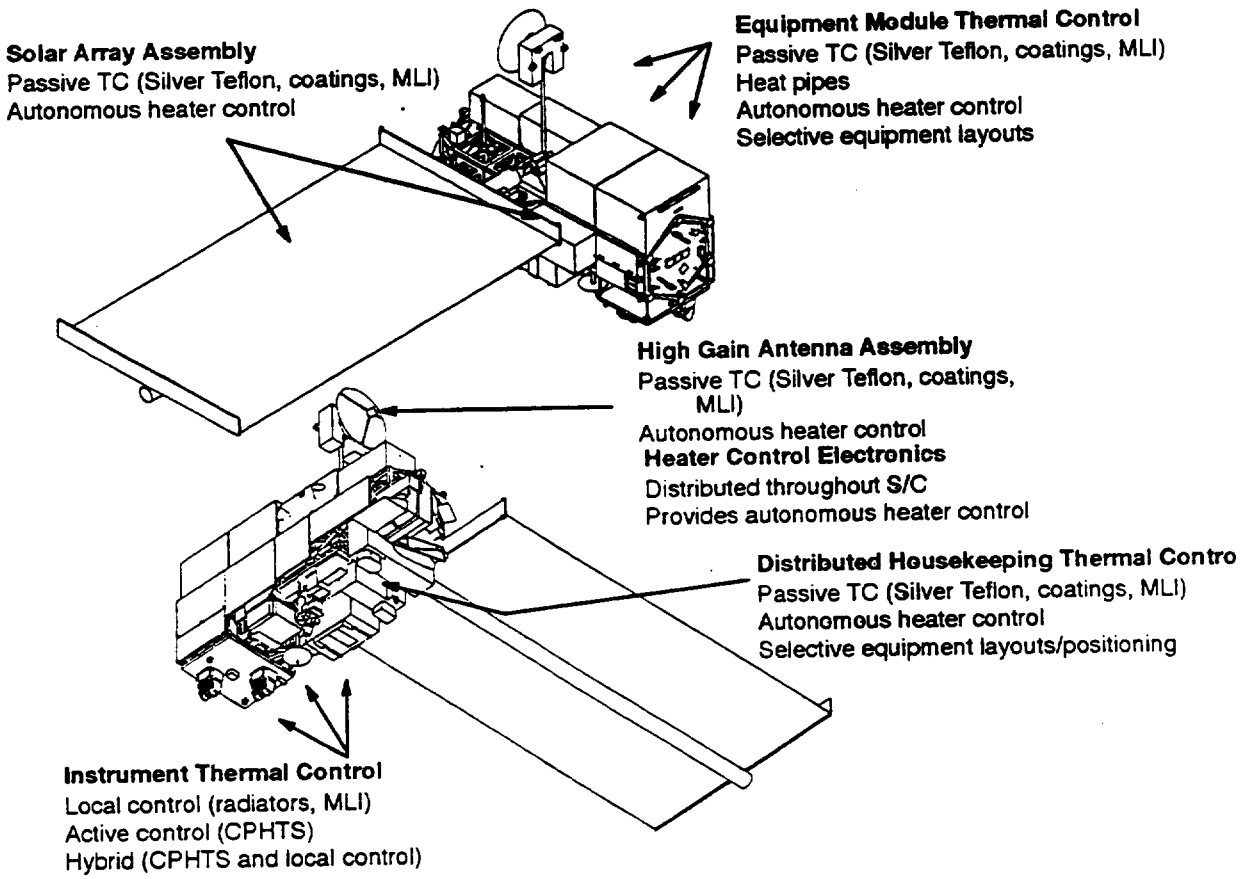

Figure 25. TCS Key Features

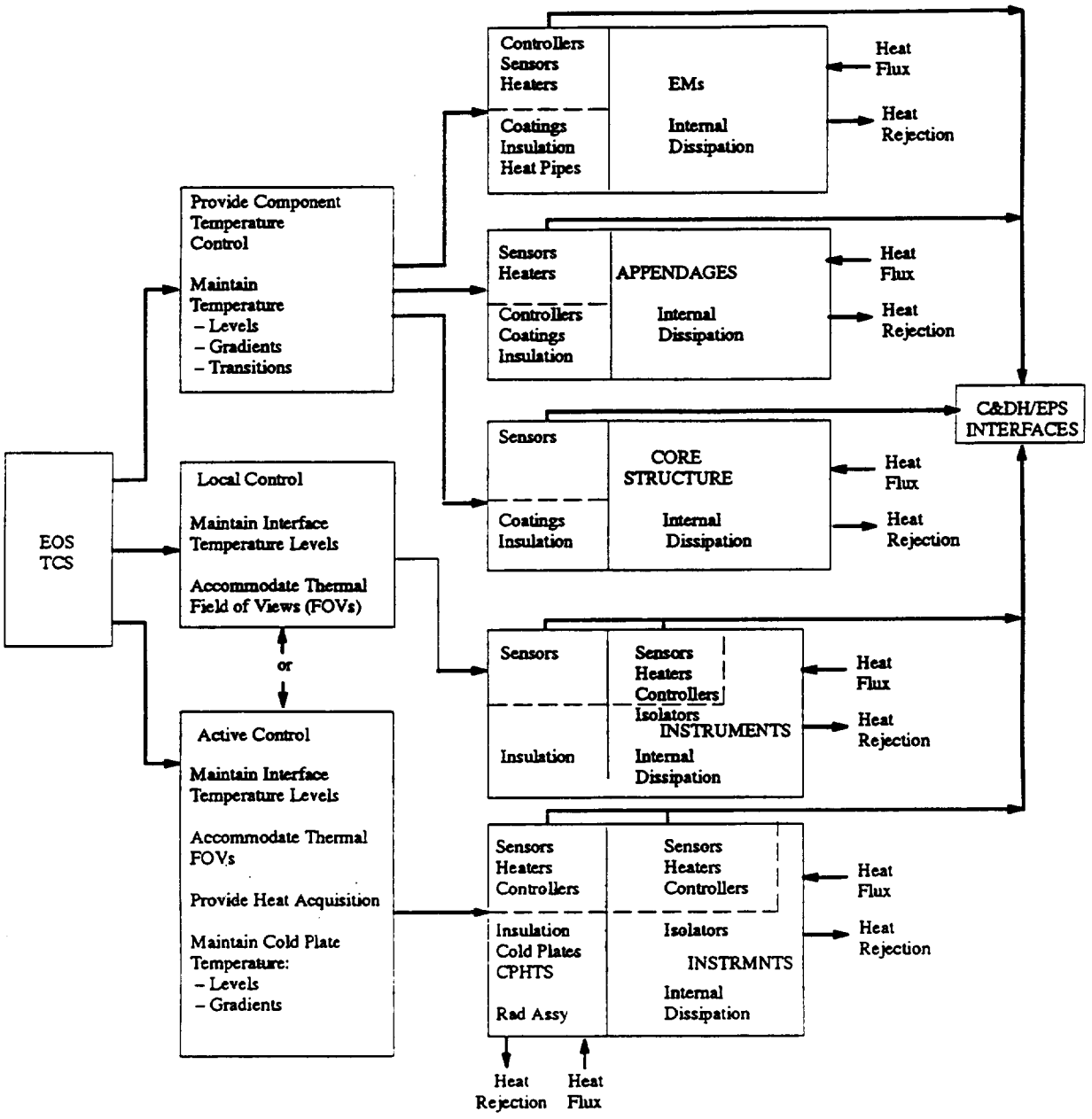

Figure 26. Thermal Control Subsystem Functional Block Diagram

5.6.3 Reliability Block Diagram

The TCS reliability block diagram is shown in Figure 27.

The CPHTS reliability block diagram is shown in Figure 28.

The equipment module reliability block diagram is shown in Figure 29.

The distributed housekeeping reliability block diagram is shown in Figure 30.

5.6.4 Subcontractor FMEAs

There were no subcontractor FMEAs used in the TCS FMEA.

5.6.5 Summary of Findings

The preliminary TCS FMEA has identified a total of 14 failure modes for both the pre–operational and the operational mission phases.

All of the failure modes were determined to have a criticality level of 3.

5.6.6 Failure Modes Studied

A summary of the failure modes which were studied is shown in Table XI.

Table XI. TCS Failure Modes

Component	Failure Mode
CPHTS	Fluid leak
CPHTS	Loss of output
CCHP	Reduced heat transport capability
Heater Assy	Loss of output
MLI	Insulation becomes detached
Silver teflon tape	Tape becomes detached

5.6.7 FMEA Worksheets

The individual FMEA worksheets for the TCS are shown in Appendix VI.

5.7 Structures and Mechanisms Subsystem (SMS) FMEA

5.7.1 Description

The SMS provides the necessary structural support and mounting area for all instruments and Spacecraft bus equipment. The SMS is designed to satisfy multiple constraints including: launch environment, launch vehicle fairing static envelope, AM instrument set science and thermal

Block #	Equipment Description	Duty Cycle (%)	FITs	Pre-OP Phase Ps	Operational Phase Ps (5 YRs)
1	Capillary Pumped Heat Transport System (CHPTS)	100	**	0.999990	0.999053
2	Recorder Equipment Module	100	**	1.000000	0.999985
3	Power Equipment Module	100	**	1.000000	0.999999
4	GN & C Sensor Equipment Module	100	**	1.000000	0.999983
5	Comm/C&DH Equipment Module	100	**	1.000000	0.999971
6	RWA Equipment Module	100	**	1.000000	0.999984
7	DAS Panel	100	**	1.000000	0.999991
8	Distributed House-keeping thermal control	100	**	1.000000	1.000000
9	Multi layer insulation (MLI)	100	Ps= 0.9999	1.000000	0.999900
10	Silver Teflon tape	100	Ps= 0.9999	1.000000	0.999900
11	Propulsion Module	100	***	–	–
12	Battery panel	100	***	–	–
	TCS reliability prediction			0.999989	0.998766
	TCS reliability allocation				0.998

* Internally redundant
** See separate reliability block diagram
*** Covered under Propulsion and Electrical Power subsystems

Figure 27. Thermal Control Subsystem Reliability Block Diagram

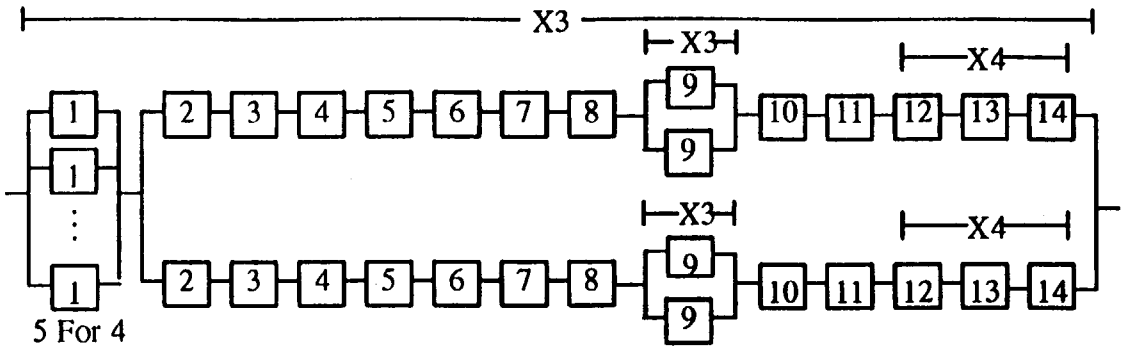

Block #	Equipment Description	Duty Cycle (%)	FITs
1	Heat pipe spreader (TIR 3/2, SWIR/MOPITT 5/4)	100	5
2	Heat pipe header	100	5
3	Heat exchanger	100	15
4	Non-compressable gas trap & pressure switch	100	100
5	Reservoir.	100	30
6	Reservoir operational heater – thermistor	100	.525
7	Reservoir operational heater – HCE (Type 3)	100	88.3
8	Reservoir operational heater – element	100	5
9	Fill / drain valve seal	100	70
10	Transport lines & flex lines	100	120
11	Cold plate capliiary pumps	100	25
12	Cold plate survival heater – thermistor	1	.525
13	Cold plate survival heater – HCE (Type 2)	1	40.2
14	Cold plate survival heater – element	1	5

Figure 28. CPHTS Reliability Block Diagram

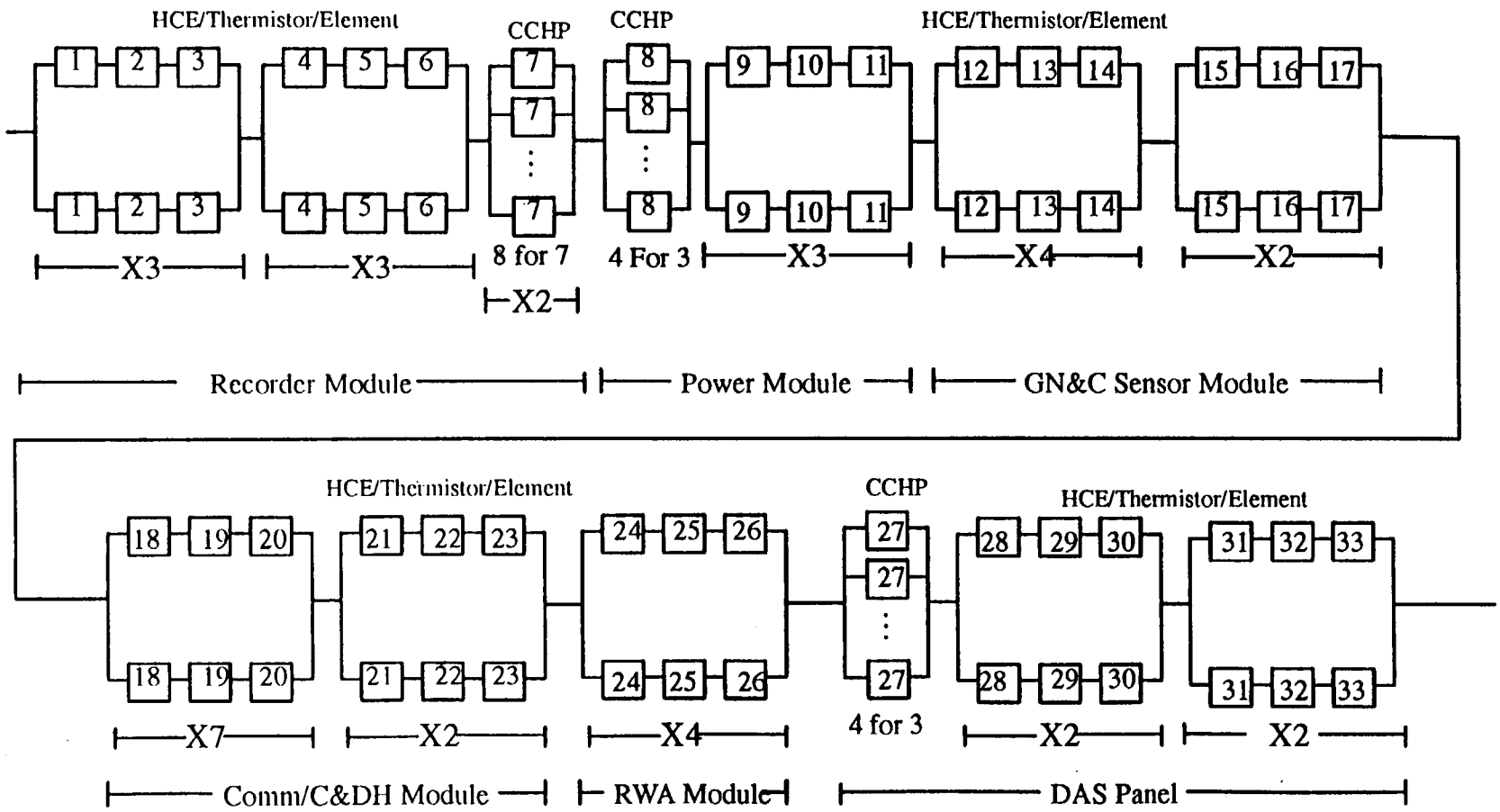

Figure 29. Equipment Module Reliability Block Diagram

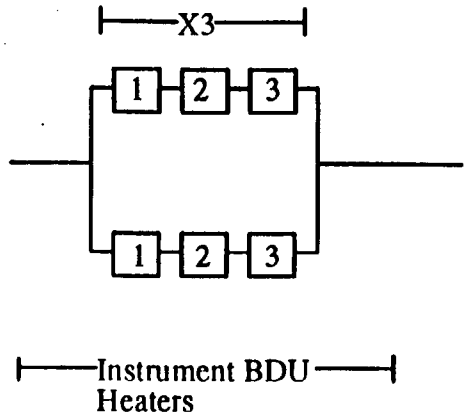

Block #	Equipment Description	Duty Cycle (%)	FITs
1	BDU survival heater – thermistor	1	.525
2	BDU survival heater – HCE (Type 2)	1	40.2
3	BDU survival heater – element	1	5

Figure 30. Distributed Housekeeping Thermal Control Reliability Block Diagram

fields–of–view (FOVs), and pointing stability. The SMS includes the release and deployment mechanism for the high–gain antenna. The SMS also provides the interface to the launch vehicle separation system.

5.7.2 Structures

The EOS–AM Spacecraft structure consists of the primary structure, EMs, equipment panels, instrument accommodation structures, and other secondary structures which support harnessing and components mounted to the primary structure.

The Spacecraft structure is not included in the Spacecraft reliability assessment and FMEA. The Spacecraft structure is assumed to have a 100% probability of success, since, as part of standard design practices, the structure will have sufficient margins to preclude the possibility of any failures.

5.7.2.1 Restraint/Deployment Mechanisms

The HGA restraint/deployment system is currently under evaluation for redesign. For the Spacecraft PDR the following baseline deployment system was used: The HGA deployment system incorporates a graphite/epoxy boom with a spring–driven hinge to achieve the proper extension from the Spacecraft. A damper allows for a controlled deployment away from the Spacecraft, and a redundant spring ensures reliability.

The means for restraining the solar array assembly (SAA) will be provided by the solar array subcontractor, however, it will likely incorporate pyrotechnic separation nuts to achieve restraint and controlled release. The pyrotechnic devices will employ redundant charges and electronics. The subcontractors preliminary reliability assessment was used as the baseline in the Spacecraft analysis

The solar array is deployed using an Astro mast cannister design. The flexible blanket array is deployed by first initiating the blanket box separation system. Once the blanket box is released, the array is rotated to the X–Y plane via the spring driven elevation hinge. Following rotation of the array, the blanket box latches are released allowing separation of both halves of the blanket box. Finally, the Astro mast motor is activated, which deploys the mast, unfolding the flexible blanket to its final position.

5.7.2.2 Solar Array Drive (SAD)

The SAD, mounted to the zenith side of the primary structure, is a precision incremental stepping device capable of rotating the array in a forward or reverse direction at various speeds. A reduction gear set provides sufficient torque to overcome the worst case solar array inertial torques reacted to the SAD and the frictional drag of the fiber brush slip ring assembly and bearings. The motor has two sets of windings for redundancy. The slip ring assembly is used to transfer the electric power and data signals across the rotating interface to the Spacecraft.

The SAD is included in the electrical power subsystem FMEA. It is appropriate to include the SAD in the electrical power subsystem analysis because the SAD is required to operate throughout the mission.

5.7.2.3 Launch Vehicle Separation System

The Launch vehicle separation system is comprised of six discrete separation nut systems. The head of each separation bolt is housed in a bay 1 node fitting. The launch vehicle side of the interface houses the nut end and attaches to fittings which form part of the launch vehicle adapter. This system was chosen to allow a simpler interface to the launch vehicle and was more weight efficient than a continuous ring interface. Separation velocity is achieved by employing a set of separation springs that push off the launch vehicle adapter. The springs are designed such that a failure of one will not prevent achieving the necessary velocity required for proper separation.

The Launch vehicle separation system is not included in the Spacecraft FMEA because it is not considered part of the Spacecraft equipment. However, each of the six separation nuts are single point failures to the Spacecraft and mission.

5.7.3 Reliability Block Diagram

The HGA deployment system reliability block diagram is shown in Figure 31.

The SA deployment system reliability block diagram is shown in Figure 32.

5.7.4 Subcontractor FMEAs

The SAA subcontractor (TRW) has suppled a preliminary FMEA for the SAA deployments. The results of this analysis were included in the EPS and SMS FMEAs.

The TRW FMEA provides two recommendations for the SA deployments:

a. TRW recommends a pre–launch visual inspection be performed to verify that the hinge trigger in the Elevation Hinge Assembly has not been tripped inadvertently during pre–launch activities.

b. For the cable lock assembly and the cables in the Blanket Box System, the failure mode of concern is the premature release of the cables which could result in the increased risk of hardware release during the launch phase. TRW recommends a structural analysis be performed to confirm that if a single cable or linkage were to fail, the remaining cables would prevent the hardware release.

5.7.5 Summary of Findings

The preliminary SMS FMEA has identified a total of 47 failure modes for both the pre–operational and the operational mission phases.

There are 16 failure modes which have been determined to have criticality level 1 and are single point failures. These failure modes are shown in Table XII.

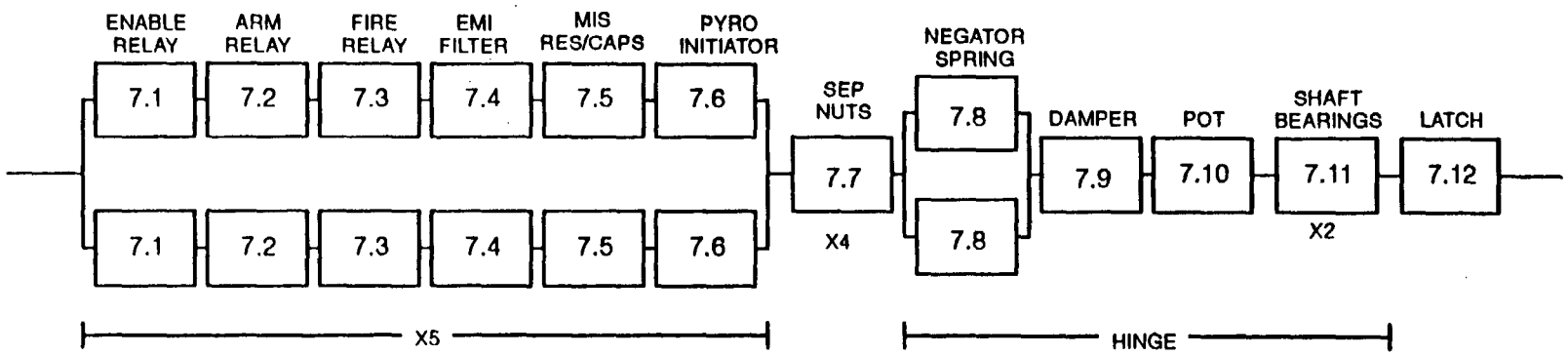

Figure 31. HGA Deployment System Reliability Block Diagram

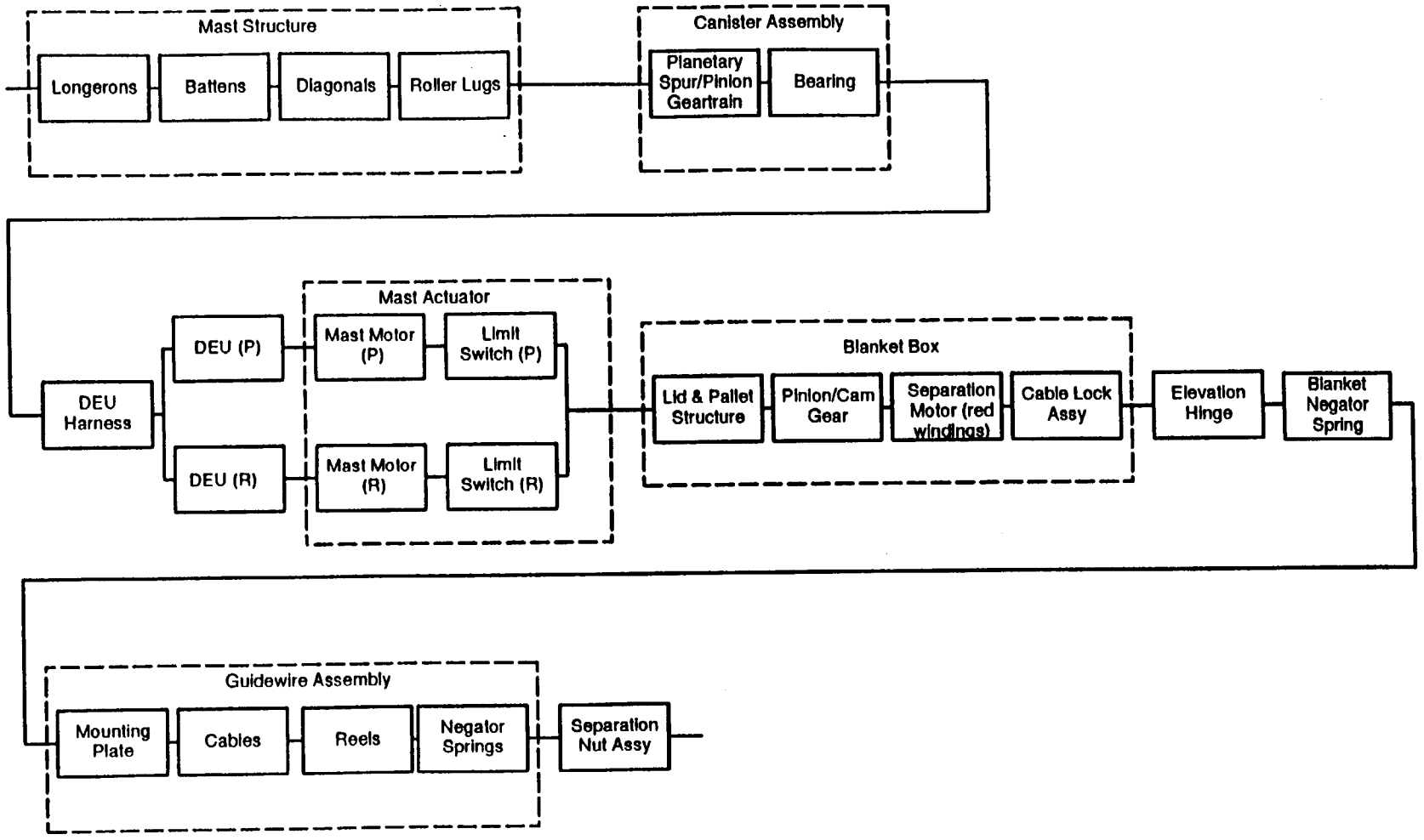

Figure 32. SA Deployment System Reliability Block Diagram

Table XII. SMS Criticality Level 1 Failure Modes

Failure Mode No.	Item	Failure Mode
SMSA01	Longeron	Longeron fails
SMSA02	Diagonal lacing	Separation from lattice
SMSA03	Battens	Separates from longeron
SMSA05	3–lead rotating drum–nut mechanism	Contamination or galling
SMSA06	Ring and Pinion gear set	Contamination
SMSA12	Drive motor	Galling
SMSA15	Gear assembly	Jammed
SMSA17	Cable lock assembly	Linkage failure
SMSA18	Cable	Material flaw, cold weld
SMSA19	Turnbuckle & load cell assy	Error during assy and test
SMSA20	Guidewire tension unit	Galling, contamination, cold welding
SMSA23	Eddy current damper	Contamination
SMSA26	Deployment and latch–up cable	Corrosion
SMSA28	Latch arm, roller and linkage assy	Galling, cold welding or contamination
SMSA29	Hinge clevis, lug, torque tube and deployment cam	Galling, cold welding or contamination
SMSA31	Separation Nut Assembly	Failure to fire (cartridge)

The remaining failure modes were determined to have a criticality level of 3.

5.7.6 Failure Modes Studied

A summary of the failure modes which were studied is shown in Table XIII.

Table XIII. SMS Failure Modes

Component	Failure Mode
HGA deploy	Leaf breakage or fracture
HGA deploy	Spring breakage
HGA deploy	Damper binding
HGA deploy	Little or no damping provided during deployment
HGA deploy	Bearing seized
HGA deploy	Latch pin shears
HGA deploy	Potentiometer circuit open

Table XIII. SMS Failure Modes (Continued)

Component	Failure Mode
HGA deploy	Relay failure to close
HGA deploy	EMI filter opens or shorts
HGA deploy	Pyro initiator fails to fire
HGA deploy	Separation nut fails to separate
SA deployment	Longeron fails
SA deployment	Separation from lattice
SA deployment	Separates from longeron
SA deployment	Excessive rolling resistance or roller seizes on shaft
SA deployment	Bearing seizes
SA deployment	Jammed teeth
SA deployment	Excessive friction
SA deployment	Fails open/closed
SA deployment	Winding failure
SA deployment	Fails to indicate end of travel
SA deployment	Premature cable release
SA deployment	Cable breakage
SA deployment	Loss of compressive force
SA deployment	Failure to fire
SA deployment	Loss of tension
SA deployment	Loss of motor power

5.7.7 FMEA Worksheets

The individual FMEA worksheets for the SMS are shown in Appendix VII.

6 NOTES

6.1 Definitions

Failure Mode The manner by which a failure is observed. Generally describes the way the failure occurs and its impact on equipment operation.

Failure Effect The consequences a failure has on the operation, function or status of an item.

Failure Cause The physical or chemical processes, design defects, quality defects, part misapplications or other processes which are the basic reason for failure or which initiate the physical process by which deterioration proceeds to failure.

Component A functional subdivision of a subsystem and generally a self–contained combination of items performing a function necessary for the subsystem's operation – a black box.

6.2 Acronyms and Abbreviations

ASTER	Advanced Spaceborne Thermal Emission and Reflection Radiometer
CERES	Clouds and Earth's Radiant Energy System
C&DHS	Command and data Handling Subsystem
COMMS	Communications Subsystem
DAS	Direct Access Service
EAS	Electrical Accommodations Subsystem
EPS	Electrical Power Subsystem
GN&CS	Guidance, Navigation and Control Subsystem
MISR	Multi–Angle Imaging Spectro–Radiometer
MODIS	Moderate–Resolution Imaging Spectrometer
MOPITT	Measurements of Pollution in the Troposphere
PDR	Preliminary design review
Ps	Probability of Success
PROPS	Propulsion Subsystem
SMS	Structures and Mechanisms Subsystem
TCS	Thermal Control Subsystem

(This page intentionally left blank.)

APPENDIX I

10 ELECTRICAL POWER SUBSYSTEM (EPS) FMEA

Failure Modes and Effects Analysis
EOS–AM Spacecraft

MARTIN MARIETTA

MARTIN MARIETTA ASTRO SPACE

Subsystem: Electrical Power	Subassembly:	Design Engineering: L. Palmieri/ A. Ferrara	Date: 7/19/93
Component:	Function:	Systems Engineering: S. Carey	Date: 7/19/93
Mission Phase: Pre–operational		Reliability Engineering: W. Schweigert	Date: 7/19/93

Failure Mode No.	Item or Function	Failure Mode	Possible Causes	Failure Effects a. Local or Subsystem b. Next Higher Assy. c. Spacecraft	Method of Detection/ Verification	Existing Compensating Features	Space-craft Level Criticality	Remarks and Recommendations
EPSR01	SSU/DEU feed & return slip ring	Brush not in contact with slip ring	Brush distorted, broken, worn, movement	a: Lose APS/DEU slip ring brush b: Loss of redundancy c: None	Telemetry	Use redundant slip ring brush	3	

Failure Modes and Effects Analysis
EOS–AM Spacecraft

MARTIN MARIETTA

MARTIN MARIETTA ASTRO SPACE

Subsystem: Electrical Power	Subassembly:	Design Engineering: L. Palmieri/ A. Ferrara	Date: 7 /19/93
Component:	Function:	Systems Engineering: S. Carey	Date: 7 /19/93
Mission Phase: Pre–operational and Operational		Reliability Engineering: W. Schweigert	Date: 7 /19/93

Failure Mode No.	Item or Function	Failure Mode	Possible Causes	Failure Effects a. Local or Subsystem b. Next Higher Assy. c. Spacecraft	Method of Detection/ Verification	Existing Compensating Features	Spacecraft Level Criticality	Remarks and Recommendations
EPSA01	Solar cell	Loss of output	Weld failure or cell failed open	a: Loss of entire solar cell string b: Loss of redundancy c: None.	Telemetry	Use redundant circuits	3	Solar array has 534 watt positive power margin
EPSA02	SSU shunt & power module	Shunt failed short or power module failed short	Part failure	a: Loss of circuit (8 strings) b: Loss of redundancy c: None	Telemetry	Use redundant circuits	3	
EPSA03	Power slip ring	Brush not in contact with slip ring	Brush distorted, broken, worn, movement	a: Lose slip ring brush b: loss of redundancy c: None	None	Brushes are redundant	3	
EPSA04	Return slip ring	Brush not in contact with slip ring	Brush distorted, broken, worn,movement	a: Lose slip ring brush b: Loss of redundancy c: None	None	Brushes are redundant	3	
EPSA05	Harness connections	Loss of connection	Weld failure	a: Lose 1 circuit power b: Loss of redundancy c: None	Telemetry	Use redundant circuits	3	
EPSA06	SA Mast Longerons & Battens	Longerons deform or batten separates from lattice	Part failure	a: Loss of longeron or batten b: Loss of SA stiffness c: Loss of mission	Telemetry	None	1	
EPS-SU01	SSU – EPC	Loss of output	Part failure	a: Lose an SSU–EPC b: Loss of redundancy c: None	Telemetry	Use redundant SSU – EPC	3	
EPS-SU02	SSU – Command Decoder	Loss of output	Part failure	a: Lose an SSU command decoder b: Loss of redundancy c: None	Telemetry	Use redundant SSU–Command Decoder	3	

DCC072193

20008657
30 July 1993

Failure Modes and Effects Analysis
EOS–AM Spacecraft

MARTIN MARIETTA

MARTIN MARIETTA ASTRO SPACE

Subsystem: Electrical Power	Subassembly:	Design Engineering: L. Palmieri/ A. Ferrara	Date: 7 /19/93
Component:	Function:	Systems Engineering: S. Carey	Date: 7 /19/93
Mission Phase: Pre–operational and Operational		Reliability Engineering: W. Schweigert	Date: 7 /19/93

Failure Mode No.	Item or Function	Failure Mode	Possible Causes	Failure Effects a. Local or Subsystem b. Next Higher Assy. c. Spacecraft	Method of Detection/ Verification	Existing Compensating Features	Spacecraft Level Criticality	Remarks and Recommendations
EPS-SU03	SSU– Vote Circuit	Loss of output	Part failure	a: Loss of vote circuit b: Loss of redundancy c: None	Telemetry	Use redundant voter circuit	3	
EP-SAD01	SAD stepping motor	Jammed due to bearing failure	Lack of lubrication or metal fatigue	a: Motor shaft will not rotate b: Extremely low power generation capability c: Loss of mission	SAD current array position	None	1	Motor bearings Ps=0.999124. Design life > 5 years.
EP-SAD02	SAD harmonic drive	Jammed due to bearing failure or gear failure	Lack of lubrication or metal fatigue	a: Array won't track sun b: Extremely low power generation capability c: Mission lost	Telemetry	None	1	Harmonic Drive bearings/gear Ps=0.998249
EP-SAD03	SAD shaft bearings	Jammed bearings	Lack of lubrication or contamination	a: SAD shaft does not rotate b:Extremely low power generation c: Mission lost	Telemetry	None	1	SAD shaft bearings Ps = 0.998249
EPADE01	ADE – EPC	Loss of output	Part failure	a: Lose ADE primary side b: Loss of redundancy c: None	Telemetry	ADE is internally redundant	3	
EPADE02	Stepping motor winding	Open winding	Excessive current or over stressed wire	a: Lose motor drive primary winding b: Loss of redundancy c: None	Telemetry	Use redundant stepping motor winding	3	Redundant wiring is on separate circuit
EPADE03	ADE – MDB	Loss of output	Part failure	a: Lose ADE primary side b: Loss of redundancy c: None	Telemetry	Use redundant side of ADE	3	
EPADE04	ADE – RG circuit	Loss of output	Part failure	a: Loss of ADE primary side b: Loss of redundancy c: None	Telemetry	Part of ADE internal redundancy	3	

Failure Modes and Effects Analysis
EOS–AM Spacecraft

MARTIN MARIETTA

MARTIN MARIETTA ASTRO SPACE

Subsystem: Electrical Power	Subassembly:	Design Engineering: L. Palmieri/ A. Ferrara	Date: 7 /19/93
Component:	Function:	Systems Engineering: S. Carey	Date: 7 /19/93
Mission Phase: Pre–operational and Operational		Reliability Engineering: W. Schweigert	Date: 7 /19/93

Failure Mode No.	Item or Function	Failure Mode	Possible Causes	Failure Effects a. Local or Subsystem b. Next Higher Assy. c. Spacecraft	Method of Detection/ Verification	Existing Compensating Features	Spacecraft Level Criticality	Remarks and Recommendations
EPADE0 5	ADE – safe-hold circuit	Loss of output	Part failure	a: Loss of safe hold circuit b: Loss of redundancy c: None	Telemetry	Use redundant circuit	3	
EPADE0 6	ADE – EPC xstrap	Loss of output	Part failure	a: Lose xstrap to backup EPC b: Loss of redundancy c: None	Telemetry	Use redundant circuit	3	
EPP-DU01	PDU capacitor /fuse bank	Loss of output	Part failure	a: Loss of ability to filter bus b: Loss of redundancy c: None	Telemetry	Redundant capacitors/ fuses	3	There are 2 capacitors per fuse. There is 64 for 61 redundancy for each set of 2 capacitors and 1 fuse.
EPP-DU02	Single bus insulation	Bus shorted	Part failure	a: Lose bus insulation layer b: Loss of redundancy c: None	Telemetry	Bus wire is double insulated	3	
EPP-DU03	PDU mode controller	Loss of output	Part failure	a: Lose a PDU mode controller b: Loss of redundancy c: None	Telemetry	Use redundant PDU mode controller	3	
EPP-DU04	PDU multi phase clock	Loss of output	Part failure	a: Lose a PDU multi phase clock b: Loss of redundancy c: None	Telemetry	Use redundant PDU multi phase clock	3	
EPP-DU05	PDU command decoder	Loss of output	Part failure	a: Lose a PDU primary command decoder b: Loss of redundancy c: None	Telemetry	Use redundant PDU command decoder	3	
EPP-DU06	PDU command & telemetry interface	Loss of output	Part failure	a: Loss of primary command & telemetry interface b: Loss of redundancy c: None	Telemetry	Use redundant PDU command & telemetry interface	3	

DCC072193

20008657
30 July 1993

Failure Modes and Effects Analysis
EOS–AM Spacecraft

MARTIN MARIETTA

MARTIN MARIETTA ASTRO SPACE

Subsystem: Electrical Power	Subassembly:	Design Engineering: L. Palmieri/ A. Ferrara	Date: 7 /19/93
Component:	Function:	Systems Engineering: S. Carey	Date: 7 /19/93
Mission Phase: Pre–operational and Operational		Reliability Engineering: W. Schweigert	Date: 7 /19/93

Failure Mode No.	Item or Function	Failure Mode	Possible Causes	Failure Effects a. Local or Subsystem b. Next Higher Assy. c. Spacecraft	Method of Detection/ Verification	Existing Compensating Features	Spacecraft Level Criticality	Remarks and Recommendations
EPP-DU07	Bus DC current shunts	Loss of output	Part failure	a: Loss of power to circuits b: Loss of non–redundant circuit c: Possible loss of mission	Telemetry	None	3	Each current shunt has redundant leaves and redundant connections.
EPP-DU08	Instrument DC current shunts	Loss of output	Part failure	a: Loss of power to instrument b: Loss of redundancy c: none	Telemetry	Use redundant current shunts	3	Each current shunt has redundant leaves and redundant connections.
EPP-DU09	PDU EPC	Loss of output	Part failure	a: Lose a PDU EPC. b: Loss of redundancy c: None	Telemetry	Use redundant PDU EPC	3	
EP-BAT01	Battery cell	Shorted cell	Pos to neg electrode short	a: Lose battery cell b: Loss of redundancy c: None	Telemetry	Each battery can tolerate 1 battery cell failed open or shorted	3	
EP-BAT02	Battery cell	Open cell	Pos or neg plate open or vessel ruptured	a: Lose battery cell b: Loss of redundancy c: None	None	Each battery can tolerate 1 battery cell failed open or shorted	3	
EP-BAT03	Battery cell TABS circuit	Diode failed short or switch failure	Part failure	a: Lose battery cell b: Loss of redundancy c: None	Telemetry	Each battery can tolerate 1 battery cell failed open or shorted	3	Provides battery bypass protection.
EP-BAT04	Battery cell thermal control	Cell not operating in thermal range	Part failure	a: Lose battery cell b: Loss of redundancy c: None	Telemetry	Each battery can tolerate 1 battery cell failed open or shorted	3	
EPBPM01	Battery cell pressure monitor (BPM)	Loss of output	Part failure	a: Lose a BPM b: Loss of redundancy c: None	Telemetry	Use redundant BPM	3	4 BPMs per battery

Failure Modes and Effects Analysis
EOS–AM Spacecraft

MARTIN MARIETTA

MARTIN MARIETTA ASTRO SPACE

Subsystem: Electrical Power	Subassembly:	Design Engineering: L. Palmieri/ A. Ferrara	Date: 7 /19/93
Component:	Function:	Systems Engineering: S. Carey	Date: 7 /19/93
Mission Phase: Pre–operational and Operational		Reliability Engineering: W. Schweigert	Date: 7 /19/93

Failure Mode No.	Item or Function	Failure Mode	Possible Causes	Failure Effects a. Local or Subsystem b. Next Higher Assy. c. Spacecraft	Method of Detection/ Verification	Existing Compensating Features	Spacecraft Level Criticality	Remarks and Recommendations
EPBPC01	Battery power conditioner (BPC)	Loss of output	Part failure	a: Lose a BPC b: Loss of redundancy c: None	Telemetry	Use redundant BPC	3	4 for 3 BPC redundancy
EPSR02	SAD control A,B,C slip ring	Brush not in contact with slip ring	Brush distorted, broken, worn, movement	a: Lose slip ring brush b: Loss of redundancy c: None	None	Brushes are redundant	3	
EPSR03	Serial I/O return slip ring	Brush not in contact with slip ring	Brush distorted, broken, worn, movement	a: Lose slip ring brush b: Loss of redundancy c: None	None	Use redundant slip ring brush	3	
EPSR04	Coarse Sun Sensor (CSS) & return slip ring	Brush not in contact with slip ring	Brush distorted, broken, worn, movement	a: Lose CSS slip ring brush b: Loss of redundancy c: None	None	Use redundant slip ring brush	3	

DCC072193

2000 8657
30 July 1993

(This page intentionally left blank.)

APPENDIX II

20 PROPULSION SUBSYSTEM (PROPS) FMEA

Failure Modes and Effects Analysis
EOS–AM Spacecraft

MARTIN MARIETTA

MARTIN MARIETTA ASTRO SPACE

Subsystem: Propulsion	Subassembly:	Design Engineering: L. Rattenni	Date: 7/19/93
Component:	Function:	Systems Engineering: S. Carey	Date: 7/19/93
Mission Phase: Pre–operational and Operational		Reliability Engineering: W. Schweigert	Date: 7/19/93

Failure Mode No.	Item or Function	Failure Mode	Possible Causes	Failure Effects a. Local or Subsystem b. Next Higher Assy. c. Spacecraft	Method of Detection/ Verification	Existing Compensating Features	Spacecraft Level Criticality	Remarks and Recommendations
PRPT01	Propellant tank	Loss of N2H4 propellant	Weld failure	a: Loss of necessary N2H4 propellant for thruster maneuvers. b: n/a c: Loss of mission	Leakage is detected by unanticipated pressure drop not due to temperature change or propellant use.	None	1	Tank leakage is extremely unlikely due to extensive pre–flight testing, qualification and design analysis.
PRPT02	Propellant tank heaters	Failure to maintain required temperature	Short circuit	a: Unable to use propellant from tank if temperature is below freezing b: Inability to access propellant in tank and reduction in mission life c: Loss of redundancy	Telemetry	Redundant heaters	3	
PRSV01	Service valves	Leakage of N2H4	Poor "o" ring seating, poor cap sealing interface or internal valve failure	a: Possible leakage of propellant through 1 of 3 redundant seals. b: n/a c: Loss of redundancy.	None	Redundant seals in each valve	3	Two separate failures would have to occur before there was a loss of propellant from the system.
PRFL01	Fuel lines	Loss of propellant	Leak or rupture of fuel lines	a: Loss of propellant b: n/a c: Loss of mission life.	Telemetry	None	1	Fuel line leakage or rupture is extremely unlikely due to extensive pre–flight testing, qualification and design analysis.
PRFL02	Line heaters	Loss of propellant due to downstream of cold point	Short circuit	a: Inability to use all or some thrusters b:n/a c: Loss of redundancy	Inability to time thrusters or access propellant	Redundant line heaters	3	

Failure Modes and Effects Analysis
EOS–AM Spacecraft

MARTIN MARIETTA

MARTIN MARIETTA ASTRO SPACE

Subsystem: Propulsion	Subassembly:	Design Engineering: L. Rattenni	Date: 7/19/93
Component:	Function:	Systems Engineering: S. Carey	Date: 7/19/93
Mission Phase: Pre–operational and Operational		Reliability Engineering: W. Schweigert	Date: 7/19/93

Failure Mode No.	Item or Function	Failure Mode	Possible Causes	Failure Effects a. Local or Subsystem b. Next Higher Assy. c. Spacecraft	Method of Detection/ Verification	Existing Compensating Features	Spacecraft Level Criticality	Remarks and Recommendations
PRFF01	Fuel filters	Loss of propellant supply to thrusters.	Clogged filter	a: Complete or partial loss of propellant to one side of thrusters. b: n/a c: Loss of redundancy	No maneuver following thruster activation	Use the redundant half system of thrusters	3	Filter contamination is extremely unlikely due to design analysis and cleanliness procedures.
PRFF02	Fuel filters	Loss of propellant supply to thrusters	External leakage due to weld failure	a: Complete or partial loss of propellant to thrusters b: n/a c: Loss of mission life	No maneuver following thruster activation	Filter analyzed for worst case condition.	1	External leakage of the filter is extremely unlikely due to design analysis, qualification and pre–flight testing
PRLV01	Latch valve	Failure to open or close or external leakage	Mechanical failure	a: Loss of ability to isolate propellant tank from one half of thrusters. b: n/a c: Loss of redundancy	Telemetry	Valve normally opened and closed after thruster failure	3	
PRREA01	1 IBF REA	Loss of REA thrust capability	Part failure	a: REA is unable to supply the necessary thrust capability for Spacecraft maneuvers. b: n/a c: Unable to perform required maneuvers using failed thruster. Use alternate thruster. If leakage occurs, close half system latch valve and only use other half system.	Unanticipated changes or lack of change to Spacecraft orientation	Redundant thrusters	3	

DCC072193

20008657
30 July 1993

Failure Modes and Effects Analysis
EOS–AM Spacecraft

MARTIN MARIETTA

MARTIN MARIETTA ASTRO SPACE

Subsystem: Propulsion	Subassembly:	Design Engineering: L. Rattenni	Date: 7/19/93
Component:	Function:	Systems Engineering: S. Carey	Date: 7/19/93
Mission Phase: Pre–operational and Operational		Reliability Engineering: W. Schweigert	Date: 7/19/93

Failure Mode No.	Item or Function	Failure Mode	Possible Causes	Failure Effects a. Local or Subsystem b. Next Higher Assy. c. Spacecraft	Method of Detection/ Verification	Existing Compensating Features	Spacecraft Level Criticality	Remarks and Recommendations
PRREA02	5 IBF REA	Loss of REA thrust capability	Part failure	a: REA is unable to supply the necessary thrust capability for Spacecraft maneuvers. b: n/a c: Unable to perform required maneuvers using failed thruster. Use alternate thruster. If leakage occurs, close half system latch valve and only use other half system.	Unanticipated changes or lack of change to Spacecraft orientation	Redundant thrusters	3	
PMTC01	Thermal control (Tanks, lines, REAs,PMEA)	Loss of ability to maintain component temperatures above the freezing point	Part failure	a: Loss of ability to heat components b: n/a c: Loss of redundancy	Telemetry	There are redundant thermal control functions	3	
PMPT01	Pressure Transducer	Loss of N2H4 propellant pressure monitoring	Part failure	a: Loss of ability to monitor the N2H4 propellant pressure. b: n/a c: Possible inability to determine propellant quantity remaining.	Telemetry	Use other methods of determining propellant quantity.	3	

Failure Modes and Effects Analysis
EOS–AM Spacecraft

MARTIN MARIETTA

MARTIN MARIETTA ASTRO SPACE

Subsystem: Propulsion	Subassembly: Electrical Assembly	Design Engineering: L. Rattenni	Date: 7/19/93
Component:	Function:	Systems Engineering: S. Carey	Date: 7/19/93
Mission Phase: Pre–operational and Operational		Reliability Engineering: W. Schweigert	Date: 7/19/93

Failure Mode No.	Item or Function	Failure Mode	Possible Causes	Failure Effects a. Local or Subsystem b. Next Higher Assy. c. Spacecraft	Method of Detection/ Verification	Existing Compensating Features	Spacecraft Level Criticality	Remarks and Recommendations
PRPME01	PMEA	Loss of the ability to command thrusters and other PM components. Loss of thruster and PMEA telemetry.	Part failure	a: Loss of ability to command thrusters. b: n/a c: Loss of redundancy	Telemetry	There are redundant PMEAs	3	
PRPME02	EPC 120V/28V	Loss of ability to provide power to PM components	Part failure	a: Loss of power to PM components b: n/a c: Loss of redundancy	Telemetry	There are redundant EPCs	3	

DCC072193

2000865/
30 July 1993

(This page intentionally left blank.)

APPENDIX III

30 COMMAND AND DATA HANDLING SUBSYSTEM (C&DHS) FMEA

Failure Modes and Effects Analysis
EOS–AM Spacecraft

MARTIN MARIETTA

MARTIN MARIETTA ASTRO SPACE

Subsystem: C & DH	Subassembly:	Design Engineering: M. Roza	Date: 7/19/93
Component:	Function:	Systems Engineering: S. Carey	Date: 7/19/93
Mission Phase: Pre–operational		Reliability Engineering: W. Schweigert	Date: 7/19/93

Failure Mode No.	Item or Function	Failure Mode	Possible Causes	Failure Effects a. Local or Subsystem b. Next Higher Assy. c. Spacecraft	Method of Detection/ Verification	Existing Compensating Features	Space-craft Level Criticality	Remarks and Recommendations
CDSCC0 1	SCC	Loss of ancillary data	Part failure	a: Unable to provide ancillary data. b: n/a c: Loss of redundancy.	Telemetry	Use redundant SCC	3	
CDCTI01	CTIU	Loss of uplink data routing	Part failure	a: Unable to process commands or route data. b: n/a c: Loss of redundancy.	Telemetry	Use redundant CTIU	3	
CDCTI02	CTIU	Loss of down link data collection	Part failure	a: Unable to downlink data. b: n/a c: Loss of redundancy.	Telemetry	Use redundant CTIU	3	
CDCDI0 3	CTIU	Loss of command distribution for the SCC	Part failure	a: Unable to process stored commands. b: n/a c: Loss of redundancy.	Telemetry	Use redundant CTIU	3	
CDCDI0 3	CTIU	Loss of time generation and synchronization	Part failure	a: Unable to provide timed data. b: n/a c: Loss of redundancy.	Telemetry	Use redundant CTIU	3	
CDBDU0 1	BDU – Housekeeping	Loss of command execution	Part failure	a: Unable to deliver command to component. b: n/a c: Loss of redundancy.	Telemetry	The BDU is internally redundant	3	
CDBDU0 2	BDU – Housekeeping	Loss of telemetry gathering capability	Part failure	a: Unable to provide telemetry input. b: n/a c: Loss of redundancy.	Telemetry	The BDU is internally redundant	3	
CDBDU0 3	BDU – Propulsion Mod	Loss of command execution	Part failure	a: Unable to deliver command to component. b: n/a c: Loss of redundancy.	Telemetry	The BDU is internally redundant	3	

Failure Modes and Effects Analysis
EOS–AM Spacecraft

MARTIN MARIETTA

MARTIN MARIETTA ASTRO SPACE

Subsystem: C & DH	Subassembly:	Design Engineering: M. Roza	Date: 7/19/93
Component:	Function:	Systems Engineering: S. Carey	Date: 7/19/93
Mission Phase: Pre–operational		Reliability Engineering: W. Schweigert	Date: 7/19/93

Failure Mode No.	Item or Function	Failure Mode	Possible Causes	Failure Effects a. Local or Subsystem b. Next Higher Assy. c. Spacecraft	Method of Detection/ Verification	Existing Compensating Features	Spacecraft Level Criticality	Remarks and Recommendations
CDBDU04	BDU – Propulsion Mod	Loss of telemetry gathering capability	Part failure	a: Unable to provide telemetry input. b: n/a c: Loss of redundancy.	Telemetry	The BDU is internally redundant	3	
CDBDU05	BDU – Instrument	Loss of command execution	Part failure	a: Unable to deliver command to component. b: n/a c: Loss of redundancy.	Telemetry	The BDU is internally redundant	3	
CDBDU05	BDU – Instrument	Loss of telemetry gathering capability	Part failure	a: Unable to provide telemetry input. b: n/a c: Loss of redundancy.	Telemetry	The BDU is internally redundant	3	
CDSFE01	SFE	Loss of the ability to receive and route data streams	Part failure	a: Unable to receive data and provide output. b: n/a c: Loss of redundancy.	Telemetry	The SFE is internally redundant.	3	
CDSFE02	SFE	Loss of the ability to route data streams to the appropriate destination	Part failure	a: Unable to send data to ground. b: n/a c: Loss of redundancy.	Telemetry	The SFE is internally redundant.	3	
CDSSR01	SSR	Loss of ability to store housekeeping telemetry	Part failure	a: Loss of some housekeeping telemetry. b: n/a c: Loss of redundancy.	Telemetry	The SSR is internally redundant	3	Not required to operate during this mission phase. No science data is being collected.
CDSSR02	SSR	Loss of the ability to store science data	Part failure	a: Unable to send science data, non–real time. b: n/a c: Loss of redundancy.	Telemetry	The SSR is internally redundant.	3	Not required to operate during this mission phase. No science data is being collected.

DCC072193

2UW08657
30 July 1993

Failure Modes and Effects Analysis
EOS–AM Spacecraft

MARTIN MARIETTA

MARTIN MARIETTA ASTRO SPACE

Subsystem: C & DH	Subassembly:	Design Engineering: M. Roza	Date: 7/19/93
Component:	Function:	Systems Engineering: S. Carey	Date: 7/19/93
Mission Phase: Operational		Reliability Engineering: W. Schweigert	Date: 7/19/93

Failure Mode No.	Item or Function	Failure Mode	Possible Causes	Failure Effects a. Local or Subsystem b. Next Higher Assy. c. Spacecraft	Method of Detection/ Verification	Existing Compensating Features	Space-craft Level Criticality	Remarks and Recommendations
CDSCC0 1	SCC	Loss of ancillary data	Part failure	a: Unable to provide ancillary data. b: n/a c: Loss of redundancy.	Telemetry	Use redundant SCC	3	
CDCTI01	CTIU	Loss of uplink data routing	Part failure	a: Unable to process commands or route data. b: n/a c: Loss of redundancy.	Telemetry	Use redundant CTIU	3	
CDCTI02	CTIU	Loss of down link data collection	Part failure	a: Unable to downlink data. b: n/a c: Loss of redundancy.	Telemetry	Use redundant CTIU	3	
CDCDI0 3	CTIU	Loss of command distribution for the SCC	Part failure	a: Unable to process stored commands. b: n/a c: Loss of redundancy.	Telemetry	Use redundant CTIU	3	
CDCDI0 3	CTIU	Loss of time generation and synchronization	Part failure	a: Unable to provide timed data. b: n/a c: Loss of redundancy.	Telemetry	Use redundant CTIU	3	
CDBDU0 1	BDU – Housekeeping	Loss of command execution	Part failure	a: Unable to deliver command to component. b: n/a c: Loss of redundancy.	Telemetry	The BDU is internally redundant	3	
CDBDU0 2	BDU – Housekeeping	Loss of telemetry gathering capability	Part failure	a: Unable to provide telemetry input. b: n/a c: Loss of redundancy.	Telemetry	The BDU is internally redundant	3	
CDBDU0 3	BDU – Propulsion Mod	Loss of command execution	Part failure	a: Unable to deliver command to component. b: n/a c: Loss of redundancy.	Telemetry	The BDU is internally redundant	3	

Failure Modes and Effects Analysis
EOS–AM Spacecraft

MARTIN MARIETTA

MARTIN MARIETTA ASTRO SPACE

Subsystem: C & DH	Subassembly:	Design Engineering: M. Roza	Date: 7/19/93
Component:	Function:	Systems Engineering: S. Carey	Date: 7/19/93
Mission Phase: Operational		Reliability Engineering: W. Schweigert	Date: 7/19/93

Failure Mode No.	Item or Function	Failure Mode	Possible Causes	Failure Effects a. Local or Subsystem b. Next Higher Assy. c. Spacecraft	Method of Detection/ Verification	Existing Compensating Features	Spacecraft Level Criticality	Remarks and Recommendations
CDBDU0 4	BDU – Propulsion Mod	Loss of telemetry gathering capability	Part failure	a: Unable to provide telemetry input. b: n/a c: Loss of redundancy.	Telemetry	The BDU is internally redundant	3	
CDBDU0 5	BDU – Instrument	Loss of command execution	Part failure	a: Unable to deliver command to component. b: n/a c: Loss of redundancy.	Telemetry	The BDU is internally redundant	3	
CDBDU0 5	BDU – Instrument	Loss of telemetry gathering capability	Part failure	a: Unable to provide telemetry input. b: n/a c: Loss of redundancy.	Telemetry	The BDU is internally redundant	3	
CDSFE0 1	SFE	Loss of the ability to receive and route data streams	Part failure	a: Unable to receive data and provide output. b: n/a c: Loss of redundancy.	Telemetry	The SFE is internally redundant.	3	
CDSFE0 2	SFE	Loss of the ability to route data streams to the appropriate destination	Part failure	a: Unable to send data to ground. b: n/a c: Loss of redundancy.	Telemetry	The SFE is internally redundant.	3	
CDSSR0 1	SSR	Loss of ability to store housekeeping telemetry	Part failure	a: Loss of some housekeeping telemetry. b: n/a c: Loss of redundancy.	Telemetry	The SSR is internally redundant	3	
CDSSR0 2	SSR	Loss of the ability to store science data	Part failure	a: Unable to send science data, non–real time. b: n/a c: Loss of redundancy.	Telemetry	The SSR is internally redundant.	3	

DCC072193

2UU8657
30 July 1993

(This page intentionally left blank.)

APPENDIX IV

40 COMMUNICATIONS SUBSYSTEM (COMMS) FMEA

Failure Modes and Effects Analysis
EOS–AM Spacecraft

MARTIN MARIETTA

MARTIN MARIETTA ASTRO SPACE

Subsystem: Communications	Subassembly:	Design Engineering: T. Milbourne	Date: 7/19/93
Component:	Function:	Systems Engineering: S. Carey	Date: 7/19/93
Mission Phase: Pre–operational		Reliability Engineering: W. Schweigert	Date: 7/19/93

Failure Mode No.	Item or Function	Failure Mode	Possible Causes	Failure Effects a. Local or Subsystem b. Next Higher Assy. c. Spacecraft	Method of Detection/ Verification	Existing Compensating Features	Spacecraft Level Criticality	Remarks and Recommendations
CMHGA	HGA							
CMHGA 01	Antenna components	Loss of signals	Loss of feed assembly, filter, polarizer, reflector, TWTA select switch	a: Loss of the capability to transmit and receive primary signals. b: n/a c: Loss of primary path for transmitting science data and receiving commands and transmitting telemetry.	Telemetry	The DAS can be used for science back–up. The omni antennas for command and telemetry, and navigation.	3	This equipment is required to operate after the HGA deploys.
CMHGA 02	Gimbal drive	Loss of pointing capability.	Gear or bearing failure. Gimbal locking pin or mechanical hard stop failure	a: Loss of the capability to steer the HGA. b: n/a c: Loss of controlled steering and pointing capability of the HGA.	Telemetry	The DAS can be used for science back–up. The omni antennas for command and telemetry, and navigation.	3	This equipment is required to operate after the HGA deploys.
CMHGA 03	Ku upconverter	Loss of output	Part failure	a: Loss of the capability to amplify transmitted science data. b: n/a c: Loss of redundancy.	Telemetry	Redundant upconverter	3	This equipment is not required to operate for this mission phase.
CMHGA 04	Ku upconverter	Loss of IF or LO signals	IF or LO switch failure	a: Loss of the capability to amplify transmitted science data. b: n/a c: Loss of redundancy.	Telemetry	The DAS can be used for science back–up. The omni antennas for command and telemetry, and navigation.	3	This equipment is not required to operate for this mission phase.
CMHGA 05	Transmitter	Loss of output	Part failure	a: Loss of the capability to amplify transmitted science data. b: n/a c: Loss of redundancy.	Telemetry	Redundant transmitter	3	This equipment is not required to operate for this mission phase.
CMHGA 06	Motor windings	Loss of HGA drive capability.	Motor winding failure, open.	a: Loss of ability to drive the HGA. b: n/a c: Loss of redundancy.	Telemetry	Redundant motor windings.	3	This equipment is required to operate after the HGA deploys.

Failure Modes and Effects Analysis
EOS–AM Spacecraft

MARTIN MARIETTA

MARTIN MARIETTA ASTRO SPACE

Subsystem: Communications	Subassembly:	Design Engineering: T. Milbourne	Date: 7/19/93
Component:	Function:	Systems Engineering: S. Carey	Date: 7/19/93
Mission Phase: Pre–operational		Reliability Engineering: W. Schweigert	Date: 7/19/93

Failure Mode No.	Item or Function	Failure Mode	Possible Causes	Failure Effects a. Local or Subsystem b. Next Higher Assy. c. Spacecraft	Method of Detection/ Verification	Existing Compensating Features	Spacecraft Level Criticality	Remarks and Recommendations
CMHGA 07	Antenna control electronics	Loss of HGA drive control	EC, MDA failure	a: Loss of ability to steer HGA. b: n/a c: Loss of redundancy	Telemetry	Redundant antenna control electronics	3	This equipment is required to operate after the HGA deploys.
CMMOD 01	KSA modulator	Loss of output	Part failure	a: Loss of coding and modulation functions for the science data. b: n/a c: Loss of redundancy	Telemetry	Redundant modulators.	3	This equipment is not required to operate for this mission phase.
CMMO01	Master oscillator	Loss of output	Part failure	a: Loss of clock signal to S/C Bus b: n/a c: Loss of redundancy.	Telemetry	Redundant master oscillators.	3	
CMSBT0 1	S–Band transponder	Loss of output	Part failure	a: Loss of the capability to transmit and receive TDRSS SSA and MA signals. Also loss of STDN signals. b: n/a c: Loss of redundancy.	Telemetry	Redundant transponders.	3	Separate connectors are provided to connect RX!/TX1 and RX2/TX2 to the SBIU to ensure there are no single point failures.
CMSB01	SBIU omni/ HGA select coax switch	Loss of output	Switch failure	a: Loss of the capability to transmit TDRSS SSA and MA signals. Also loss of STDN signals b: n/a c: Loss of redundancy.	Telemetry	Redundant transponders.	3	
CMSB02	SBIU Zenith/ Nadir switch	Loss of output	Switch failure	a: Loss of the capability to transmit TDRSS SSA signals. b: n/a c: Loss of redundancy.	Telemetry	The HGA is the primary route for the signals.	3	

DCC072193

2000 8657
30 July 1993

Failure Modes and Effects Analysis
EOS–AM Spacecraft

MARTIN MARIETTA

MARTIN MARIETTA ASTRO SPACE

Subsystem: Communications	Subassembly:	Design Engineering: T. Milbourne	Date: 7/19/93
Component:	Function:	Systems Engineering: S. Carey	Date: 7/19/93
Mission Phase: Pre–operational		Reliability Engineering: W. Schweigert	Date: 7/19/93

Failure Mode No.	Item or Function	Failure Mode	Possible Causes	Failure Effects a. Local or Subsystem b. Next Higher Assy. c. Spacecraft	Method of Detection/ Verification	Existing Compensating Features	Spacecraft Level Criticality	Remarks and Recommendations
CMSB03	SBIU HGA polarization switch	Loss of output	Switch failure	a: Loss of capability to transmit TDRSS SSA and MA signals. Also loss of STDN signals b: n/a c: Loss of redundancy.	Telemetry	The HGA is the primary route for the signals.	3	
CMSB04	SBIU omni antenna diplexer	Loss of output	Diplexer failure	a: Loss of signals to/from one omni antenna. b: n/a c: Loss of redundancy.	Telemetry	Redundant signal paths.	3	
CMSB05	SBIU HGA diplexer	Loss of output	Diplexer failure	a: Loss of signals to/from one HGA polarization b: n/a c: Loss of redundancy	Telemetry	Redundant signal paths.	3	
CMSB06	SBIU coupler	Loss of output	Coupler failure	a: Loss of receive signals to one transponder. b: n/a c: Loss of redundancy	Telemetry	Redundant signal paths	3	
CMANT01	Omni antenna	Loss of signals	Connector failure	a: Loss of coverage for TDRSS or GN command reception and telemetry transmission b: n/a c: Loss of redundancy	Telemetry	Redundant signal paths	3	
CMDAS01	DAS modulator	Loss of output	Part failure	a: Loss of coding and modulation functions for science data b: n/a c: Loss of redundancy	Telemetry	Redundant modulators	3	This equipment is not required to operate for this mission phase.

Failure Modes and Effects Analysis
EOS–AM Spacecraft

MARTIN MARIETTA

MARTIN MARIETTA ASTRO SPACE

Subsystem: Communications	Subassembly:	Design Engineering: T. Milbourne	Date: 7/19/93
Component:	Function:	Systems Engineering: S. Carey	Date: 7/19/93
Mission Phase: Pre–operational		Reliability Engineering: W. Schweigert	Date: 7/19/93

Failure Mode No.	Item or Function	Failure Mode	Possible Causes	Failure Effects a. Local or Subsystem b. Next Higher Assy. c. Spacecraft	Method of Detection/ Verification	Existing Compensating Features	Spacecraft Level Criticality	Remarks and Recommendations
CMDAS02	DAS upconverter	Loss of output	Part failure	a: Loss of the capability to upconvert the DAS modulator output to the transmit frequency. b: n/a c: Loss of redundancy.	Telemetry	Redundant upconverter	3	This equipment is not required to operate for this mission phase.
CMDAS03	DAS transmitter	Loss of output	Part failure	a: Loss of the ability to transmit DAS signals. b: n/a c: Loss of redundancy.	Telemetry	Redundant transmitters.	3	This equipment is not required to operate for this mission phase.
CMDAS04	DAS WG switch	Loss of output	Switch failure	a: Loss of DAS science data b: n/a c: Loss of redundancy	Telemetry	None	3	This equipment is not required to operate for this mission phase.
CMDAS05	DAS filter	Loss of output	Part failure	a: Loss of DAS science data b: n/a c: Loss of redundancy	Telemetry	None	3	This equipment is not required to operate for this mission phase.
CMDAS06	DAS X–Band antenna	Loss of output	Connector failure	a: Loss of DAS science data b: n/a c: Loss of redundancy	Telemetry	None	3	This equipment is not required to operate for this mission phase.
CMSB07	3dB hybrid for omni ants and HGA	Loss of output	Part failure	a: Loss of ability to receive commands from the omni antenna or the HGA. b: n/a c: Loss of redundancy.	Telemetry	None	3	The system design can tolerate the loss of the omni antenna hybrid before the HGA is deployed. The HGA deployment will be initiated via a stored command.

DCC072193

20000657
30 July 1993

Failure Modes and Effects Analysis
EOS–AM Spacecraft

MARTIN MARIETTA

MARTIN MARIETTA ASTRO SPACE

Subsystem: Communications	Subassembly:	Design Engineering: T. Milbourne	Date: 7/19/93
Component:	Function:	Systems Engineering: S. Carey	Date: 7/19/93
Mission Phase: Operational		Reliability Engineering: W. Schweigert	Date: 7/19/93

Failure Mode No.	Item or Function	Failure Mode	Possible Causes	Failure Effects a. Local or Subsystem b. Next Higher Assy. c. Spacecraft	Method of Detection/ Verification	Existing Compensating Features	Spacecraft Level Criticality	Remarks and Recommendations
CMHGA	HGA							
CMHGA 01	Antenna components	Loss of signals	Loss of feed assembly, filter, polarizer, reflector, TWTA select switch	a: Loss of the capability to transmit and receive primary signals. b: n/a c: Loss of primary path for transmitting science data and receiving commands and transmitting telemetry.	Telemetry	The DAS can be used for science back-up. The omni antennas for command and telemetry, and navigation.	3	The loss of the HGA will require additional SSA contact through the omni antennas.
CMHGA 02	Gimbal drive	Loss of pointing capability.	Gear or bearing failure. Gimbal locking pin or mechanical hard stop failure	a: Loss of the capability to steer the HGA. b: n/a c: Loss of controlled steering and pointing capability of the HGA.	Telemetry	The DAS can be used for science back-up. The omni antennas for command and telemetry, and navigation.	3	The loss of the HGA will require additional SSA contact through the omni antennas.
CMHGA 03	Ku upconverter	Loss of output	Part failure	a: Loss of the capability to amplify transmitted science data. b: n/a c: Loss of redundancy.	Telemetry	Redundant upconverter	3	
CMHGA 04	Ku upconverter	Loss of IF or LO signals	IF or LO switch failure	a: Loss of the capability to amplify transmitted science data. b: n/a c: Loss of redundancy.	Telemetry	The DAS can be used for science back-up. The omni antennas for command and telemetry, and navigation.	3	
CMHGA 05	Transmitter	Loss of output	Part failure	a: Loss of the capability to amplify transmitted science data. b: n/a c: Loss of redundancy.	Telemetry	Redundant transmitter	3	
CMHGA 06	Motor windings	Loss of HGA drive capability.	Motor winding failure, open.	a: Loss of ability to drive the HGA. b: n/a c: Loss of redundancy.	Telemetry	Redundant motor windings.	3	

Failure Modes and Effects Analysis
EOS–AM Spacecraft

MARTIN MARIETTA

MARTIN MARIETTA ASTRO SPACE

Subsystem: Communications	Subassembly:	Design Engineering: T. Milbourne	Date: 7/19/93
Component:	Function:	Systems Engineering: S. Carey	Date: 7/19/93
Mission Phase: Operational		Reliability Engineering: W. Schweigert	Date: 7/19/93

Failure Mode No.	Item or Function	Failure Mode	Possible Causes	Failure Effects a. Local or Subsystem b. Next Higher Assy. c. Spacecraft	Method of Detection/ Verification	Existing Compensating Features	Spacecraft Level Criticality	Remarks and Recommendations
CMHGA 07	Antenna control electronics	Loss of HGA drive control	EC, MDA failure	a: Loss of ability to steer HGA. b: n/a c: Loss of redundancy	Telemetry	Redundant antenna control electronics	3	
CMMOD 01	KSA modulator	Loss of output	Part failure	a: Loss of coding and modulation functions for the science data. b: n/a c: Loss of redundancy	Telemetry	Redundant modulators.	3	
CMMO01	Master oscillator	Loss of output	Part failure	a: Loss of clock signal to S/C Bus b: n/a c: Loss of redundancy.	Telemetry	Redundant master oscillators.	3	
CMSBT0 1	S–Band transponder	Loss of output	Part failure	a: Loss of the capability to transmit and receive TDRSS SSA and MA signals. Also loss of STDN signals. b: n/a c: Loss of redundancy.	Telemetry	Redundant transponders.	3	Separate connectors are provided to connect RXI/TX1 and RX2/TX2 to the SBIU to ensure there are no single point failures.
CMSB01	SBIU omni/ HGA select coax switch	Loss of output	Switch failure	a: Loss of the capability to transmit TDRSS SSA and MA signals. Also loss of STDN signals b: n/a c: Loss of redundancy.	Telemetry	Redundant transponders.	3	
CMSB02	SBIU Zenith/ Nadir switch	Loss of output	Switch failure	a: Loss of the capability to transmit TDRSS SSA signals. b: n/a c: Loss of redundancy.	Telemetry	The HGA is the primary route for the signals.	3	

DCC072193

20008657
30 July 1993

Failure Modes and Effects Analysis
EOS–AM Spacecraft

MARTIN MARIETTA

MARTIN MARIETTA ASTRO SPACE

Subsystem: Communications	Subassembly:	Design Engineering: T. Milbourne	Date: 7/19/93
Component:	Function:	Systems Engineering: S. Carey	Date: 7/19/93
Mission Phase: Operational		Reliability Engineering: W. Schweigert	Date: 7/19/93

Failure Mode No.	Item or Function	Failure Mode	Possible Causes	Failure Effects a. Local or Subsystem b. Next Higher Assy. c. Spacecraft	Method of Detection/ Verification	Existing Compensating Features	Spacecraft Level Criticality	Remarks and Recommendations
CMSB03	SBIU HGA polarization switch	Loss of output	Switch failure	a: Loss of capability to transmit TDRSS SSA and MA signals. Also loss of STDN signals b: n/a c: Loss of redundancy.	Telemetry	The HGA is the primary route for the signals.	3	
CMSB04	SBIU omni antenna diplexer	Loss of output	Diplexer failure	a: Loss of signals to/from one omni antenna. b: n/a c: Loss of redundancy.	Telemetry	Redundant signal paths.	3	
CMSB05	SBIU HGA diplexer	Loss of output	Diplexer failure	a: Loss of signals to/from one HGA polarization b: n/a c: Loss of redundancy	Telemetry	Redundant signal paths.	3	
CMSB06	SBIU coupler	Loss of output	Coupler failure	a: Loss of receive signals to one transponder. b: n/a c: Loss of redundancy	Telemetry	Redundant signal paths	3	
CMANT01	Omni antenna	Loss of signals	Connector failure	a: Loss of coverage for TDRSS or GN command reception and telemetry transmission b: n/a c: Loss of redundancy	Telemetry	The HGA is the primary route for the signals. Redundant signal paths	3	
CMDAS01	DAS modulator	Loss of output	Part failure	a: Loss of coding and modulation functions for science data b: n/a c: Loss of redundancy	Telemetry	Redundant modulators	3	
CMDAS02	DAS upconverter	Loss of output	Part failure	a: Loss of capability to upconvert DAS modulator output to the transmit frequency. b: n/a c: Loss of redundancy.	Telemetry	Redundant upconverter	3	

Failure Modes and Effects Analysis
EOS–AM Spacecraft

MARTIN MARIETTA

MARTIN MARIETTA ASTRO SPACE

Subsystem: Communications	Subassembly:	Design Engineering: T. Milbourne	Date: 7/19/93
Component:	Function:	Systems Engineering: S. Carey	Date: 7/19/93
Mission Phase: Operational		Reliability Engineering: W. Schweigert	Date: 7/19/93

Failure Mode No.	Item or Function	Failure Mode	Possible Causes	Failure Effects a. Local or Subsystem b. Next Higher Assy. c. Spacecraft	Method of Detection/ Verification	Existing Compensating Features	Spacecraft Level Criticality	Remarks and Recommendations
CMDAS03	DAS transmitter	Loss of output	Part failure	a: Loss of ability to transmit DAS signals. b: n/a c: Loss of redundancy.	Telemetry	Redundant transmitters.	3	
CMDAS04	DAS WG switch	Loss of output	Switch failure	a: Loss of DAS science data b: n/a c: Loss of redundancy	Telemetry	None	3	The DAS is not required for mission success. The DAS is included in the reliability calculations as a backup to the Ku–Band Equipment.
CMDAS05	DAS filter	Loss of output	Part failure	a: Loss of DAS science data b: n/a c: Loss of redundancy	Telemetry	None	3	The DAS is not required for mission success. The DAS is included in the reliability calculations as a backup to the Ku–Band Equipment.
CMDAS06	DAS X–Band antenna	Loss of output	Connector failure	a: Loss of DAS science data b: n/a c: Loss of redundancy	Telemetry	None	3	The DAS is not required for mission success. The DAS is included in the reliability calculations as a backup to the Ku–Band Equipment.
CMSB07	3dB hybrid for omni ants and HGA	Loss of output	Part failure	a: Loss of ability to receive commands from the omni antenna or the HGA. b: n/a c: Loss of redundancy.	Telemetry	The HGA is the primary route for the signals. Redundant signal paths	3	

DCC072193

2000086657
30 July 1993

(This page intentionally left blank.)

(This page intentionally left blank.)

APPENDIX V

50 GUIDANCE, NAVIGATION & CONTROL SUBSYSTEM (GN&CS) FMEA

Failure Modes and Effects Analysis
EOS–AM Spacecraft

MARTIN MARIETTA

MARTIN MARIETTA ASTRO SPACE

Subsystem: GN & C	Subassembly:	Design Engineering: C. Gay	Date: 7/19/93
Component:	Function:	Systems Engineering: S. Carey	Date: 7/19/93
Mission Phase: Pre–operational and Operational		Reliability Engineering: W. Schweigert	Date: 7/19/93

Failure Mode No.	Item or Function	Failure Mode	Possible Causes	Failure Effects a. Local or Subsystem b. Next Higher Assy. c. Spacecraft	Method of Detection/ Verification	Existing Compensating Features	Spacecraft Level Criticality	Remarks and Recommendations
GNRWA 01	Reaction Wheel	Loss of reaction torques	Part failure	a: Loss of the ability to generate reaction torques. b: n/a c: Loss of redundancy.	Telemetry	The RWA has 4 for 3 redundancy	3	
GNRWA 02	Reaction Wheel	Loss of tach pulses	Part Failure	a: Loss of the ability to determine wheel speeds. b: n/a c: Loss of redundancy	Telemetry	The RWA has 4 for 3 redundancy and the ACE is redundant	3	Redundant tach outputs available to the backup ACE
GNI-RU01	Inertial Reference Unit	Loss of gyro channel	Part failure or gyro failure	a: Loss of Spacecraft inertial attitude reference b: n/a c: Loss of redundancy.	Telemetry	The IRU has 3 for 2 gyro channel redundancy	3	
GNI-RU02	Inertial Reference Unit	Loss of body rates and delta angle pulses	Part failure or gyro failure	a: Loss of Spacecraft inertial attitude reference b: n/a c: Loss of redundancy.	Telemetry	The IRU has 3 for 2 gyro channel redundancy	3	
GNMTR0 1	Magnetic Torquer Rod	Loss of magnetic moment	Part failure	a: Loss of the magnetic torques to remove angular momentum stored in the RWAs. b: n/a c: Loss of redundancy	Telemetry	The MTR has redundant coils	3	
GNCSS0 1	Coarse Sun Sensor	Loss of output	Part failure	a: Loss of the ability to measure the sun vector in the Spacecraft coordinates. b: n/a c: Loss of redundancy.	Telemetry	The CSS has redundant sensor units.	3	
GNACE0 1	Attitude Control Electronics	Loss of TAM power conditioning	Part failure	a: Loss of TAM b: n/a c: Loss of redundancy.	Telemetry	The ACE is redundant	3	
GNACE0 2	Attitude Control Electronics	Loss of RWA power conditioning	Part failure	a: Loss of a RW b: n/a c: Loss of redundancy	Telemetry	The RWA is 4 for 3 redundant	3	

Failure Modes and Effects Analysis
EOS–AM Spacecraft

MARTIN MARIETTA

MARTIN MARIETTA ASTRO SPACE

Subsystem: GN & C	Subassembly:	Design Engineering: C. Gay	Date: 7/19/93
Component:	Function:	Systems Engineering: S. Carey	Date: 7/19/93
Mission Phase: Pre–operational and Operational		Reliability Engineering: W. Schweigert	Date: 7/19/93

Failure Mode No.	Item or Function	Failure Mode	Possible Causes	Failure Effects a. Local or Subsystem b. Next Higher Assy. c. Spacecraft	Method of Detection/ Verification	Existing Compensating Features	Spacecraft Level Criticality	Remarks and Recommendations
GNACE0 3	Attitude Control Electronics	Loss of RWA torque commands	Part failure	a: Loss of the ability to command a RWA b: n/a c: Loss of redundancy	Telemetry	The ACE is redundant	3	
GNACE0 4	Attitude Control Electronics	Loss of IRU tachometer pulse signal processing capability	Part failure	a: Loss of IRU data b: n/a c: Loss of redundancy	Telemetry	The ACE is redundant	3	
GNACE0 5	Attitude Control Electronics	Loss of RWA tachometer pulse signal processing capability	Part failure	a: Loss of RWA data b: n/a c: Loss of redundancy	Telemetry	The ACE is redundant	3	
GNACE0 6	Attitude Control Electronics	Loss of RWA control signal processing capability	Part failure	a: Loss of RWA data b: n/a c: Loss of redundancy	Telemetry	The ACE is redundant	3	
GNACE0 7	Attitude Control Electronics	Loss of MTR drive capability	Part failure	a: Loss of one MTR b: n/a c: Loss of redundancy	Telemetry	The ACE is redundant	3	
GNACE0 8	Attitude Control Electronics	Loss of Safe Hold capability	Part failure	a: Loss of the ability to provide the Safe Hold capability for the Spacecraft b: n/a c: Loss of redundancy	Telemetry	The ACE is redundant	3	
GNACE0 9	Attitude Control Electronics	Loss of thruster commands	Part failure	a: Loss of the ability to command the thrusters b: n/a c: Loss if redundancy	Telemetry	The ACE is redundant	3	Only effects SAFE–HOLD

DCC072193

20008657
30 July 1993

Failure Modes and Effects Analysis
EOS–AM Spacecraft

MARTIN MARIETTA

MARTIN MARIETTA ASTRO SPACE

Subsystem: GN & C	Subassembly:	Design Engineering: C. Gay	Date: 7/19/93
Component:	Function:	Systems Engineering: S. Carey	Date: 7/19/93
Mission Phase: Pre–operational and Operational		Reliability Engineering: W. Schweigert	Date: 7/19/93

Failure Mode No.	Item or Function	Failure Mode	Possible Causes	Failure Effects a. Local or Subsystem b. Next Higher Assy. c. Spacecraft	Method of Detection/ Verification	Existing Compensating Features	Spacecraft Level Criticality	Remarks and Recommendations
GNSST0 1	Solid State Star Tracker	Loss of star position and magnitude data	Part failure	a: Loss of star position and star magnitude data b: n/a c: Loss of redundancy	Telemetry	There are redundant SSSTs. The FSS can also be used as back–up.	3	
GNFSS0 1	Fine Sun Sensor	Loss of sun vector data	Part failure	a: Loss of sun vector data in the Spacecraft coordinates b: n/a c: Loss of redundancy	Telemetry	The FSS is used as a back–up to the SSSTs.	3	
GNTAM0 1	Three Axis Magnetometer	Loss of output	Part failure	a: Loss of output signals proportional to the ambient magnetic field b: n/a c: Loss of redundancy.	Telemetry	There are redundant TAMs.	3	
GNE-SA01	Earth Sensor Assembly	Loss of output	Part failure	a: Loss of pitch and roll attitude indications. b: n/a c: Loss of redundancy	Telemetry	The ESA is redundant	3	
GNPSU0 1	Power Switching Unit	Loss of output	Part failure	a: Loss of the ability to supply 28V to the GN&CS components b: n/a c: Loss of redundancy	Telemetry	The PSU is redundant	3	

APPENDIX VI

60 THERMAL CONTROL SUBSYSTEM (TCS) FMEA

Failure Modes and Effects Analysis
EOS–AM Spacecraft

MARTIN MARIETTA

MARTIN MARIETTA ASTRO SPACE

Subsystem: Thermal Control	Subassembly:	Design Engineering: D. Chalmers	Date: 7/19/93
Component: CPHTS	Function:	Systems Engineering: S. Carey	Date: 7/19/93
Mission Phase: Pre–operational and Operational		Reliability Engineering: W. Schweigert	Date: 7/19/93

Failure Mode No.	Item or Function	Failure Mode	Possible Causes	Failure Effects a. Local or Subsystem b. Next Higher Assy. c. Spacecraft	Method of Detection/ Verification	Existing Compensating Features	Spacecraft Level Criticality	Remarks and Recommendations
TCCP01	Heat pipe spreader	Fluid leak	Weld failure	a: Loss of heat pipe b: n/a c: Loss of redundancy	Temperature Telemetry	Heat pipes are redundant	3	
TCCP02	Heat pipe header	Fluid leak	Weld failure	a: Loss of fluid loop b: n/a c: Loss of redundancy	Temperature Telemetry	Use secondary fluid loop	3	
TCCP03	Heat pipe heat exchanger	Fluid leak	Weld failure	a: Loss of fluid loop b: n/a c: Loss of redundancy	Pressure switch/ Temperature telemetry	Use secondary fluid loop	3	
TCCP04	Non–condensable gas trap	Fluid leak	Weld failure	a: Loss of fluid loop b: n/a c: Loss of redundancy	Pressure switch/ Temperature telemetry	Use secondary fluid loop	3	
TCCP05	Reservoir	Fluid leak	Weld failure	a: Loss of fluid loop b: n/a c: Loss of redundancy	Pressure switch/ Temperature telemetry	Use secondary fluid loop	3	
TCCP06	Reservoir heater assembly	Loss of output	Part failure	a: Loss of heater assembly b: n/a c: loss of redundancy	Temperature Telemetry	Use redundant heater	3	
TCCP07	Fill/drain valve	Fluid leak	Failed seals	a: Loss of fluid loop b: n/a c: Loss of redundancy	Pressure switch/ Temperature telemetry	Use secondary fluid loop	3	
TCCP08	Transport lines and flex lines	Fluid leak	Weld failure	a: Loss of fluid loop b: n/a c: Loss of redundancy	Pressure switch/ Temperature telemetry	Use secondary loop	3	
TCCP09	Cold plate capillary pumps	Fluid leak	Weld failure	a: Loss of fluid loop b: n/a c: Loss of redundancy	Pressure switch/ Temperature telemetry	Use secondary loop	3	
TCCP10	Cold plate heater assembly	Loss of output	Part failure	a: Loss of heater assembly b: n/a c: Loss of redundancy	Temperature Telemetry	Use redundant heater	3	Cold plate heaters are survival heaters (1% duty cycle)

Failure Modes and Effects Analysis
EOS–AM Spacecraft

MARTIN MARIETTA

MARTIN MARIETTA ASTRO SPACE

Subsystem: Thermal Control	Subassembly:	Design Engineering: D. Chalmers	Date: 7/19/93
Component: EM	Function:	Systems Engineering: S. Carey	Date: 7/19/93
Mission Phase: Pre–operational and Operational		Reliability Engineering: W. Schweigert	Date: 7/19/93

Failure Mode No.	Item or Function	Failure Mode	Possible Causes	Failure Effects a. Local or Subsystem b. Next Higher Assy. c. Spacecraft	Method of Detection/ Verification	Existing Compensating Features	Spacecraft Level Criticality	Remarks and Recommendations
TCEM01	Constant conductance heat pipes (all)	Reduced heat transport capability	Weld failure	a: Loss of CCHP b: n/a c: Loss of redundancy	Temperature Telemetry	Can tolerate loss of one heat pipe	3	
TCEM02	Component heater assembly	Loss of output	Part failure	a: Loss of heater b: n/a c: Loss of redundancy	Temperature Telemetry	Use redundant heater	3	

DCC072193

2UW08657
30 July 1993

Failure Modes and Effects Analysis
EOS–AM Spacecraft

MARTIN MARIETTA

MARTIN MARIETTA ASTRO SPACE

Subsystem: Thermal Control	Subassembly:	Design Engineering: D. Chalmers	Date: 7/19/93
Component: Miscellaneous	Function:	Systems Engineering: S. Carey	Date: 7/19/93
Mission Phase: Pre–operational and Operational		Reliability Engineering: W. Schweigert	Date: 7/19/93

Failure Mode No.	Item or Function	Failure Mode	Possible Causes	Failure Effects a. Local or Subsystem b. Next Higher Assy. c. Spacecraft	Method of Detection/ Verification	Existing Compensating Features	Spacecraft Level Criticality	Remarks and Recommendations
TCMIS01	Multilayer insulation	Insulation becomes detached	Launch vibration	a: Possible loss of local insulation b: n/a c: Negligible effect to thermal control of Spacecraft	Temperature telemetry	Multiple layers of insulation	3	1. There are 15 layers of insulation. The system can tolerate the loss of some layers. 2. There are multiple tie down points.
TCMIS02	Silver teflon tape	Tape becomes detached	Contamination, launch vibration	a: Possible loss of local heat reflection capability. b: n/a c: Negligible effect to thermal control of Spacecraft.	Temperature telemetry	None	3	The loss of the majority of the silver teflon tape would need to occur before there would be a significant impact to the overall thermal control of the Spacecraft. The probability of this occurring is extremely unlikely.

APPENDIX VII

70 STRUCTURES AND MECHANISMS (SMS) FMEA

Failure Modes and Effects Analysis
EOS–AM Spacecraft

MARTIN MARIETTA

MARTIN MARIETTA ASTRO SPACE

Subsystem: SMS	Subassembly: HGA Deployment	Design Engineering: J. Pellicotti	Date: 7/19/93
Component:	Function:	Systems Engineering: S. Carey	Date: 7/19/93
Mission Phase: Pre–operational		Reliability Engineering: W. Schweigert	Date: 7/19/93

Failure Mode No.	Item or Function	Failure Mode	Possible Causes	Failure Effects a. Local or Subsystem b. Next Higher Assy. c. Spacecraft	Method of Detection/ Verification	Existing Compensating Features	Spacecraft Level Criticality	Remarks and Recommendations
	Hinge Assembly							
SMHGA01	Negator Spring	Leaf break or fracture	Material flaw or weakness	a: Slight spring output torque reduction. b: n/a c: Negligible effect	Telemetry	Multi–leaf spring. Redundant hinge spring.	3	
SMHGA02	Negator Spring	Spring breakage	Overstressed material or fracture at mounting holes	a: Spring detached from output spring drum. Loss of torque producing element. b: n/a c: Loss of redundancy	Telemetry	Redundant hinge spring	3	Slower hinge deployment
SMHGA03	Damper	Damper binding	Seized bearings or other mechanical failure	a: Boom fails to rotate to deployed configuration. b: Reduced hinge stiffness. c: Possible loss of HGA pointing ability.	Telemetry	a: Limited amount of binding will be compensated for by dual springs. b: The DAS can be used for science back–up. The omni antennas for command, telemetry and navigation.	3	Spacecraft maneuvers could be attempted to activate latch mechanism or point HGA in proper direction.
		Damper binding	Open fuse or thermostat connection in heater circuit	a: Heaters do not operate to decrease damping fluid viscosity. b: n/a c: Delay in hinge deployment	Telemetry	Damper can be directed towards the sun.	3	Requires Spacecraft maneuvers to orient damper towards the sun.
SMHGA04	Damper	Little or no damping provided during deployment	Loss of damping fluid thru leaking seals or mechanical failure (vane, etc.)	a: Abnormally fast deployment of inboard boom. Components of HGA will experience increased dynamic loading with possible resulting damage. b: n/a c: Possible reduction in HGA pointing capability.	Telemetry	The DAS can be used for science back–up. The omni antennas for command, telemetry and navigation.	3	

Failure Modes and Effects Analysis
EOS–AM Spacecraft

MARTIN MARIETTA

MARTIN MARIETTA ASTRO SPACE

Subsystem: SMS	Subassembly: HGA Deployment	Design Engineering: J. Pellicotti	Date: 7/19/93
Component:	Function:	Systems Engineering: S. Carey	Date: 7/19/93
Mission Phase: Pre–operational		Reliability Engineering: W. Schweigert	Date: 7/19/93

Failure Mode No.	Item or Function	Failure Mode	Possible Causes	Failure Effects a. Local or Subsystem b. Next Higher Assy. c. Spacecraft	Method of Detection/ Verification	Existing Compensating Features	Spacecraft Level Criticality	Remarks and Recommendations
SMHGA05	Hinge shaft bearings	Bearing seized	Contamination or mechanical failure	a: Boom fails to extend 90° to deployed configuration. b: n/a c: Effective HGA tracking is lost.	Telemetry	a: Limited amount of seizing can be compensated for by the dual springs. b: The DAS can be used for science back–up. The omni antennas for command, telemetry and navigation.	3	Spacecraft maneuvers could be attempted to shake hinge loose.
SMHGA06	Hinge latch	Latch pin shears	Excessive deployment speed/momentum	a: Reduced hinge stiffness b: n/a c: Possible reduction in pointing accuracy	Telemetry	The DAS can be used for science back–up. The omni antennas for command, telemetry and navigation.	3	
SMHGA07	Hinge line potentiometer	Potentiometer circuit open	open connection or mechanical failure of wiper	a: Potentiometer inoperative b: n/a c: Loss of telemetry from potentiometer	Telemetry	None	3	Loss of telemetry. No effect on the hinge function.
SMHGA08	Hinge line potentiometer	Bearing seized	Contamination or mechanical failure	a: Boom fails to extend 90° to deployed configuration. b: n/a c: Possible loss of HGA pointing capability	Telemetry	a: Limited amount of binding may be overcome by dual hinge springs. b: The DAS can be used for science back–up. The omni antennas for command, telemetry and navigation.	3	Spacecraft maneuvers could be attempted to shake hinge loose.
SMHGA09	Enable, arm and fire relays	Relay failure to close	Relay failure	a: Loss of ability to fire pyro initiator b: n/a c: Loss of redundancy	Telemetry	There are redundant paths to fire the pyro initiators.	3	
SMHGA10	EMI filter	EMI filter opens or shorts	Part failure	a: Loss of ability to fire pyro initiator b: n/a c: Loss of redundancy	Telemetry	There are redundant paths to fire the pyro initiators.	3	

DCC072193

20000807
30 July 1993

Failure Modes and Effects Analysis
EOS–AM Spacecraft

MARTIN MARIETTA

MARTIN MARIETTA ASTRO SPACE

Subsystem: SMS	Subassembly: HGA Deployment	Design Engineering: J. Pelliccotti	Date: 7/19/93
Component:	Function:	Systems Engineering: S. Carey	Date: 7/19/93
Mission Phase: Pre–operational		Reliability Engineering: W. Schweigert	Date: 7/19/93

Failure Mode No.	Item or Function	Failure Mode	Possible Causes	Failure Effects a. Local or Subsystem b. Next Higher Assy. c. Spacecraft	Method of Detection/ Verification	Existing Compensating Features	Space-craft Level Criticality	Remarks and Recommendations
SMHGA1 1	Miscella-neous PRA components	Components fail open or shorted	Part failure	a: Loss of ability to fire pyro initiator b: n/a c: Loss of redundancy	Telemetry	There are redundant paths to fire the pyro initiators.	3	
SMHGA1 2	Pyro initiator	Pyro initiator fails to fire	Part failure	a: Loss of one pyro initiator path b: n/a c: Loss of redundancy	Telemetry	There are redundant paths to fire the pyro initiators.	3	
SMHGA1 3	Separation Nuts	Separation nut fails to separate.	Part failure	a: Loss of the ability to deploy the HGA b: n/a c: Loss of HGA	Telemetry	The DAS can be used for science back–up. The omni antennas for command, telemetry and navigation.	3	

Failure Modes and Effects Analysis
EOS–AM Spacecraft

MARTIN MARIETTA

MARTIN MARIETTA ASTRO SPACE

Subsystem: SMS	Subassembly: SA Deployment	Design Engineering: Sub (TRW)	Date: 7/19/93
Component: Mast/Canister Assembly	Function:	Systems Engineering: S. Carey	Date: 7/19/93
Mission Phase: Pre–operational		Reliability Engineering: W. Schweigert	Date: 7/19/93

Failure Mode No.	Item or Function	Failure Mode	Possible Causes	Failure Effects a. Local or Subsystem b. Next Higher Assy. c. Spacecraft	Method of Detection/ Verification	Existing Compensating Features	Spacecraft Level Criticality	Remarks and Recommendations
SMSA01	Fiberglass Continuous Collable Longerons	Longeron fails (breaks, deforms)	Part failure.	a: Hung deployment and loss of mast stiffness b: SAA deployment failure c: Possible loss of mission	Telemetry	None	1	Material controls, proof testing and deployment testing.
SMSA02	Diagonal lacing	Separation from lattice	Part failure	a: Free cable end could hang up the rotating mechanism b: Incomplete SAA deployment c: Loss of mission	Telemetry	None	1	
SMSA03	Fiberglass battens	Separates from longeron	Part failure	a: Free cable end could hang up the rotating mechanism b: Incomplete SAA deployment c: Loss of mission	Telemetry	None	1	
SMSA04	Roller lugs	Excessive rolling resistance or roller seizes on shaft	Contamination	a: Additional friction causes unbalance of forces among the engaged rollers. b: Power consumption of the drive motors may briefly exceed allocation c: Negligible	Telemetry	None	3	Motor torque margins should be sufficient to overcome excessive friction. It is currently 300% above nominal frictional forces. Some analysis may be required to verify.
SMSA05	3–lead rotating drum–nut mechanism	Bearing siezes	Contamination or galling	a: Excessive friction as mast is deployed b: Inability to deploy SA c: Loss of mission	Telemetry	None	1	It may be possible to use both motors together to overcome excess friction. One motor has 300% torque margin against nominal frictional forces.
SMSA06	Ring and pinion gear set	Jammed, teeth breakage or slip	Contamination	a: Incomplete mast deployment b: Incomplete SA deployment c: Loss of mission	Telemetry	None	1	

DCC072193

2UU08657
30 July 1993

Failure Modes and Effects Analysis
EOS–AM Spacecraft

MARTIN MARIETTA

MARTIN MARIETTA ASTRO SPACE

Subsystem: SMS	Subassembly: SA Deployment	Design Engineering: Sub (TRW)	Date: 7/19/93
Component: Mast/Canister Assembly	Function:	Systems Engineering: S. Carey	Date: 7/19/93
Mission Phase: Pre–operational		Reliability Engineering: W. Schweigert	Date: 7/19/93

Failure Mode No.	Item or Function	Failure Mode	Possible Causes	Failure Effects a. Local or Subsystem b. Next Higher Assy. c. Spacecraft	Method of Detection/ Verification	Existing Compensating Features	Spacecraft Level Criticality	Remarks and Recommendations
SMSA07	DC brushless motors	Failure to turn, excessive friction	Winding fails open or short, galling	a: Inability to deploy SA b: n/a c: Loss of redundancy	Telemetry	The motors are mechanically redundant	3	
SMSA08	Hall Effect Sensor	Fails open	Part failure	a: Loss of mast deployment telemetry b: n/a c: no effect	Telemetry	None	3	
SMSA09	Motor Temperature Sensor	Fails open	Part failure	a: Loss of telemetry b: n/a c: No effect	Telemetry	None	3	
SMSA10	Limit switches	Failure to close	Part failure	a: Loss of DEU stop signal b: Incomplete mast deployment until detected c: Loss of redundancy	Telemetry	Limit switch is redundant	3	
SMSA11	Batten fitting	Failure to trip limit switch	Part failure	a: Neither primary or redundant limit switch would be tripped at the end of mast deployment b: n/a c: No effect	Telemetry	None	3	The mast motor should stall without damaging any hardware (TBD). DEU override command would then be used to halt motor current

Failure Modes and Effects Analysis
EOS–AM Spacecraft

MARTIN MARIETTA

MARTIN MARIETTA ASTRO SPACE

Subsystem: SMS	Subassembly: SA Deployment	Design Engineering: Sub (TRW)	Date: 7/19/93
Component: Blanket Box Subsystem	Function:	Systems Engineering: S. Carey	Date: 7/19/93
Mission Phase: Pre–operational		Reliability Engineering: W. Schweigert	Date: 7/19/93

Failure Mode No.	Item or Function	Failure Mode	Possible Causes	Failure Effects a. Local or Subsystem b. Next Higher Assy. c. Spacecraft	Method of Detection/ Verification	Existing Compensating Features	Spacecraft Level Criticality	Remarks and Recommendations
SMSA12	Drive motor	Mechanically seizes	Galling	a: Blanket could not be released b: SAA deployment failure c: Loss of mission	Telemetry	None	1	
SMSA13	Drive motor	Winding failure	Winding fails open or short	a: Unable to release blanket b: n/a c: Loss of redundancy	Telemetry	None	3	
SMSA14	Gear assembly	Resists motion	Contamination	a: Reduction in torque margin b: n/a c: No effect	Telemetry	None	3	Motor torque is in excess of 1000% of that required to complete blanket release.
SMSA15	Gear assembly	Jammed	Contamination	a: Blanket could not be released b: SA deployment failure c: Loss of mission	Telemetry	None	1	Motor torque is high enough to overcome most foreign objects that could enter the gear train.
SMSA16	Limit switches	Fails to indicate end of travel	Failed short	a: Failure to stop drive motor. b: n/a c: Loss of redundancy	Telemetry	None	3	Continued motor travel beyond the limit would cause the motor pinion to run off the end of the torque tube's "half–moon" gear without hardware damage.

DCC072193

2UW08657
30 July 1993

Failure Modes and Effects Analysis
EOS–AM Spacecraft

MARTIN MARIETTA

MARTIN MARIETTA ASTRO SPACE

Subsystem: SMS	Subassembly: SA Deployment	Design Engineering: Sub (TRW)	Date: 7/19/93
Component: Blanket Box Subsystem	Function:	Systems Engineering: S. Carey	Date: 7/19/93
Mission Phase: Pre-operational		Reliability Engineering: W. Schweigert	Date: 7/19/93

Failure Mode No.	Item or Function	Failure Mode	Possible Causes	Failure Effects a. Local or Subsystem b. Next Higher Assy. c. Spacecraft	Method of Detection/ Verification	Existing Compensating Features	Spacecraft Level Criticality	Remarks and Recommendations
SMSA17	Cable lock assy	Premature cable release	Linkage failure	a: Localized loss of blanket preload resulting in an uneven preload. b: n/a c: Increased risk of hardware release during launch	None	None	1	Very unlikely failure if appropriate fracture control and structural verification programs are implemented. Perform structural analysis to verify design.
SMSA18	Cable	Breaks during launch, end loop failure, end loop fails to disengage from hook latch	Material flaw, cold weld	a: Localized loss of blanket preload resulting in an uneven preload. b: Blanket will not release c: Loss of mission	None	None	1	Cable will have a factor of 10:1 against maximum tension produced by launch loads. USe of dry lube coating on hook latches combined dissimilar metals should be enough to preclude cold welding
SMSA19	Turnbuckle & load cell assy	Excessively tight or loose adjustment	Error during assembly and testing	a: Uneven preload and possible premature cable release during launch b: n/a c: Loss of mission	None	None	1	Cable tension can be checked as part of the prelaunch procedures. This is a safety critical item.

Failure Modes and Effects Analysis
EOS–AM Spacecraft

MARTIN MARIETTA

MARTIN MARIETTA ASTRO SPACE

Subsystem: SMS	Subassembly: SA Deployment	Design Engineering: Sub (TRW)	Date: 7/19/93
Component: Blanket Box Subsystem	Function:	Systems Engineering: S. Carey	Date: 7/19/93
Mission Phase: Pre–operational		Reliability Engineering: W. Schweigert	Date: 7/19/93

Failure Mode No.	Item or Function	Failure Mode	Possible Causes	Failure Effects a. Local or Subsystem b. Next Higher Assy. c. Spacecraft	Method of Detection/ Verification	Existing Compensating Features	Spacecraft Level Criticality	Remarks and Recommendations
SMSA20	Guidewire tension unit	Excessive friction	Galling, contamination, cold welding	a: Crooked or incomplete deployment b: Degradation of available power c: Loss of mission	Telemetry	None	1	
SMSA21	Guidewire cables	Breaks	Corrosion	a: Partial loss of blanket support b: n/a c: No effect	Telemetry	None	3	The other 3 wire should provide sufficient support to prevent large out–of–plane motions that could result in blanket damage

DCC072193

20008657
30 July 1993

Failure Modes and Effects Analysis
EOS–AM Spacecraft

MARTIN MARIETTA

MARTIN MARIETTA ASTRO SPACE

Subsystem: SMS	Subassembly: SA Deployment	Design Engineering: Sub (TRW)	Date: 7/19/93
Component: Elevation Hinge Assy	Function:	Systems Engineering: S. Carey	Date: 7/19/93
Mission Phase: Pre–operational		Reliability Engineering: W. Schweigert	Date: 7/19/93

Failure Mode No.	Item or Function	Failure Mode	Possible Causes	Failure Effects a. Local or Subsystem b. Next Higher Assy. c. Spacecraft	Method of Detection/ Verification	Existing Compensating Features	Spacecraft Level Criticality	Remarks and Recommendations
SMSA22	Compression coil spring	Loss of compressive force	Fracture	a: Reduced deployment force b: Possible slow deployment c: No effect	Telemetry	None	3	
SMSA23	Eddy current damper	Excessive resistance to motion	Contamination	a: Possible hung deployment b: SA deployment failure c: Loss of mission	Telemetry	None	1	Contamination would have to be severe for a complete seize–up. A 400% force margin is available to overcome any excessive force.
SMSA24	Potentiometer	Fails open	Part failure	a:No position telemetry b: Position of EHA could not be determined during deployment c: No effect	Telemetry	None	3	
SMSA25	Latch–up micro switch	Does not close at latch–up	Contamination, corrosion of contacts	a: Loss on telemetry b: n/a c: Loss of redundancy	Telemetry	The switches are redundant	3	
SMSA26	Deployment & latch–up cable	Breaks	Corrosion	a: No deployment force provided to EHA b: SA would not rotate into the 70 deg deployed position c: Loss of mission	Telemetry	None	1	This failure has an extremely low probability of occurrence and can be well controlled through proof–testing, material selection and material control.
SMSA27	Adjustable stop	Adjusted too far inward or outward	Improper adjustment	a: Insufficient preload applied to hinge at end of deployment b: n/a c: Impact on structural dynamics	Telemetry	None	3	

Failure Modes and Effects Analysis
EOS–AM Spacecraft

MARTIN MARIETTA

MARTIN MARIETTA ASTRO SPACE

Subsystem: SMS	Subassembly: SA Deployment	Design Engineering: Sub (TRW)	Date: 7/19/93
Component: Elevation Hinge Assy	Function:	Systems Engineering: S. Carey	Date: 7/19/93
Mission Phase: Pre–operational		Reliability Engineering: W. Schweigert	Date: 7/19/93

Failure Mode No.	Item or Function	Failure Mode	Possible Causes	Failure Effects a. Local or Subsystem b. Next Higher Assy. c. Spacecraft	Method of Detection/ Verification	Existing Compensating Features	Space-craft Level Criticality	Remarks and Recommendations
SMSA28	Latch arm, roller and linkage assy	Excessive resistance to motion	Galling, cold welding, or contamination	a: Incomplete latch–up b: SAA could move during on–orbit inertial loads c: Possible loss of mission	Telemetry	None	1	
SMSA29	Hinge clevis, lug, torque tube and deployment cam	Excessive resistance to motion	Galling, cold welding, or contamination	a: Incomplete latch–up b: SAA could move during on–orbit inertial loads c: Possible loss of mission	Telemetry	None	1	Pre–launch visual inspection to verify that hinge trigger has not been tripped inadvertently by pre–launch activities.
SMSA30	Idler pulleys	Excessive rolling resistance	Galling, contamination	a: slight reduction in available cable deployment force b: n/a c: No effect	Telemetry	None	3	Cable force is 400% greater than the maximum predicted load necessary to complete deployment and latch–up.

DCC072193

20008657
30 July 1993

Failure Modes and Effects Analysis
EOS–AM Spacecraft

MARTIN MARIETTA

MARTIN MARIETTA ASTRO SPACE

Subsystem: SMS	Subassembly: SA Deployment	Design Engineering: Sub (TRW)	Date: 7/19/93
Component: Retention/Release Mech	Function:	Systems Engineering: S. Carey	Date: 7/19/93
Mission Phase: Pre–operational		Reliability Engineering: W. Schweigert	Date: 7/19/93

Failure Mode No.	Item or Function	Failure Mode	Possible Causes	Failure Effects a. Local or Subsystem b. Next Higher Assy. c. Spacecraft	Method of Detection/ Verification	Existing Compensating Features	Space-craft Level Criticality	Remarks and Recommendations
	Separation Nut Assem-bly							
SMSA31	Cartridge	Failure to fire	Bridge–wire failure	a: Loss of ability to fire initiator b: Loss of SAA deployment c: Loss of mission	Telemetry		1	
SMSA32	Bolt extractor assy						TBD	
SMSA33	Compression spring	Loss of tension	Part failure				TBD	

Failure Modes and Effects Analysis
EOS–AM Spacecraft

MARTIN MARIETTA

MARTIN MARIETTA ASTRO SPACE

Subsystem: SMS	Subassembly: SA Deployment	Design Engineering: Sub (TRW)	Date: 7/19/93
Component: Electronics	Function:	Systems Engineering: S. Carey	Date: 7/19/93
Mission Phase: Pre-operational		Reliability Engineering: W. Schweigert	Date: 7/19/93

Failure Mode No.	Item or Function	Failure Mode	Possible Causes	Failure Effects a. Local or Subsystem b. Next Higher Assy. c. Spacecraft	Method of Detection/ Verification	Existing Compensating Features	Space-craft Level Criticality	Remarks and Recommendations
SMSA34	DEU	Loss of motor power	Part failure	a: Loss of motor power b: n/a c: Loss of redundancy	Blanket box separation limit switch telemetry	The DEU is redundant	3	All functions and internal electronics of the DEU are internally redundant. A short in one blanket box motor winding leads would reduce the torque provided by the other winding. However, at least a 300% torque margin is available in the redundant winding.

DCC072193

20008657
30 July 1993

(This page intentionally left blank.)

(Preliminary)
Critical Items List (CIL)
EOS–AM Spacecraft
(PA–510)

20008652
CAGE No. 49671
30 July 1993

(Preliminary)
Critical Items List (CIL)
EOS–AM Spacecraft
(PA–510)

Prepared under:
Contract NAS5–32500
NASA Goddard Space Flight Center
Greenbelt, Maryland 20771

Prepared by:
Martin Marietta Corporation
Astro Space
P.O. Box 800
Princeton, New Jersey 08543–0800

DCC072693

REVISION LOG

This log identifies those portions of this document which have been revised since the original issue. Revised portions of each page, for the current revision only, are identified by marginal striping.

Revision	Paragraph Number(s) Affected	Rev. Date	Approval
Preliminary		07/30/93	WS

TABLE OF CONTENTS

SECTION / PARAGRAPH	TITLE	PAGE
1	SCOPE	1
2	REFERENCE DOCUMENTS	3
2.1	Government Documents	3
2.1.1	NASA Documents	3
2.1.2	Military Documents	3
2.1.3	Other Government Documents	3
2.2	Non–Government Documents	3
2.2.1	Martin Marietta Astro Space Documents	3
2.2.2	Other Non–Government Documents	3
3	CIL OVERVIEW	4
3.1	Selection Criteria	4
3.2	Format and Contents	4
4	CIL SUMMARY	5
4.1	Spacecraft Bus CIL	5
4.2	Instrument CIL	6
4.3	CIL Sheets	7
5	NOTES	8
5.1	Acronyms and Abbreviations	8

APPENDIX I

10	EOS–AM SPACECRAFT CIL SHEETS	10

LIST OF TABLES

TABLE	TITLE	PAGE
I	Spacecraft Bus CIL Summary	5

1 SCOPE

This document details the preliminary EOS–AM Spacecraft Critical Items List (CIL). The CIL reflects the baseline Spacecraft design for the Spacecraft Preliminary Design Review (PDR).

(This page intentionally left blank.)

2 REFERENCE DOCUMENTS

The following documents of the exact issue shown are the higher tier documents to this document.

2.1 Government Documents

2.1.1 NASA Documents

GSFC 420–05–02B 13 November 1992	Earth Observing System (EOS) Performance Assurance Requirements for the EOS–AM Spacecraft

2.1.2 Military Documents

2.1.3 Other Government Documents

2.2 Non–Government Documents

2.2.1 Martin Marietta Astro Space Documents

20004280 12 July 1991	Subcontractor Performance Assurance Requirements
20005396 EOS–AM 15 May 1993	Contract End Item (CEI) Specification for the Spacecraft (SEP–101)
20005397 17 January 1992	Product Assurance Implementation Plan, (PA–100)
20008608 05 October 1992	Ground Rules and Assumptions for Reliability Assessments (PA–515)
20008607 05 October 1992	Ground Rules and Assumptions for Failure Modes and Effects Analysis (FMEA) (PA–500)
EOS–DN–SE&I–010 10 June 1993	Baseline Description Document (BDD) for the EOS–AM Spacecraft (preliminary)
Source:	Martin Marietta Astro Space P. O. Box 800 Princeton, NJ 08543–0800

2.2.2 Other Non–Government Documents

None

3 CIL OVERVIEW

The preliminary Critical Items List (CIL) is presented in this report. The CIL contains all components on the Spacecraft which meet the selection criteria described herein.

3.1 Selection Criteria

The following selection criteria were used to determine if a component is to be considered critical to the success of the mission:

a. Failure Modes which have been categorized by the Failure Modes and Effects Analysis (FMEA) as Criticality 1 or 2.

b. All items that are single point failures.

c. All parts which exceed their derating criteria.

d. All Martin Marietta Safety identified two fault–tolerant items that may result in potential loss of life or serious injury to personnel.

3.2 Format and Contents

For each item listed on the CIL the following information is given:

a. Item identification

b. The basis for inclusion on the CIL

c. The design approach reasoning for not eliminating the critical item (i.e. compensating features and retention rationale.)

d. The special controls or test to be implemented to detect, prevent or mitigate the effect.

4 CIL SUMMARY

4.1 Spacecraft Bus CIL

The critical items shown in the preliminary Spacecraft CIL are criticality 1 items, single point failures and three items which exceed the derating criteria. As the detailed design phase progresses, additional items will be added as they are identified. A summary of the Spacecraft Bus critical items is shown in Table I.

Table I. Spacecraft Bus CIL Summary

Subsystem	Item	Selection Criteria	FMEA Mode No.	Summary
EPS	SAD stepper motor	SPF	EPSAD01	Jammed bearing
EPS	SAD harmonic drive	SPF	EPSAD02	Jammed bearing or gear
EPS	SAD shaft bearings	SPF	EPSAD03	Jammed bearings
EPS	SA mast longerons and battens	SPF	EPSA06	Longerons deform or battens separate from lattice
EPS	200 volt polypropylene capacitors	DER		Exceeds derating criteria (ref waiver EOD007)
PROPS	Propellant tank	SPF	PRPT01	Loss of propellant, weld failure
PROPS	Fuel lines	SPF	PRFL01	Leakage or rupture of fuel lines
PROPS	Fuel filter	SPF	PRFF02	External leakage due to weld failure
SMS – SA deployment	Longeron	SPF	SMSA01	Longeron fails
	Diagonal lacing	SPF	SMSA02	Separation from lattice
	Battens	SPF	SMSA03	Separates from longeron
	3–lead rotating drum–nut mechanism	SPF	SMSA05	Contamination or galling
	Ring and pinion gear set	SPF	SMSA06	Contamination
	Drive Motor	SPF	SMSA12	Galling
	Gear assembly	SPF	SMSA15	Jammed
	Cable lock assembly	SPF	SMSA17	Linkage failure
	Cable	SPF	SMSA18	Material flaw, cold weld
	Turnbuckle & load cell assy	SPF	SMSA19	Error during assy and test
	Guidewire tension unit	SPF	SMSA20	Galling, contamination, cold welding
	Eddy current damper	SPF	SMSA23	Contamination
	Deployment latch–up cable	SPF	SMSA26	Corrosion

Table I. Spacecraft Bus CIL Summary (Continued)

Subsys-tem	Item	Selec-tion Criteria	FMEA Mode No.	Summary
	Latch arm, roller and linkage assy	SPF	SMSA28	Galling, cold welding, contamination
	Hinge clevis, lug, torque tube and deployment cam	SPF	SMSA29	Galling, cold welding, contamination
	Separation nut assembly	SPF	SMSA31	Failure to fire (cartridge)
Various	Discrete command hybrid (23006351G1)	DER		Exceeds derating criteria (ref waiver EOD014)
Various	200 volt multi–layer ceramic capacitors	DER		Exceeds derating criteria (ref waiver EOD006)

4.2 Instrument CIL

Some of the individual Instrument CILs were not received in time to be included with this version of the Spacecraft CIL. The following paragraphs briefly summarized the Instrument CILs which were received.

MISR CIL – Did not receive.

MOPITT CIL – Did not receive.

MODIS CIL, dated 9/92 – The following items were shown on the MODIS CIL as critical items to the MODIS science mission:

Item	Assembly
Readout interated circuit (ROIC) LWIR–PV	Focal Plane Array (FPA)
ROIC SWIR/MWIR	FPA
Detectors LWIR–PC	FPA
ROIC VIS	FPA
ROIC NIR	FPA
Filters optical window VIS	FPA
Filters optical window NIR	FPA
CMD/TLM assy (TCP, Relay, Board assy)	CMD/TLM assy
Memory Output Integrated Circuit	FIFO assy
Motor Bearings	Motor/Encoder
TCP Relay Board & MIL–S–1553 bus circuit	CMD/TLM
Single point ground hardware	Bracket, power supply

Item	Assembly
Amplifier Module (hybrid)	Cooler Loacted Amplifier Module (CLAM)
Resistors R1, R2	Scan Mirror Controller

ASTER CIL, dated 3/93 (part of FMEA) – The ASTER FMEA and CIL were very preliminary and there was not much detail contained in the analysis.

CERES CIL , dated 5/92 (part of FMEA) – The CERES CIL did not provide any details. The CIL only included a summary of the FMEA, no other details were supplied.

4.3 CIL Sheets

The individual CIL sheets for the critical items are contained in Appendix I. The preliminary CIL sheets contain the preliminary information. The CIL sheets will be updated to supply the complete details for the Spacecraft CDR.

5 NOTES

5.1 Acronyms and Abbreviations

ASTER	Advanced Spaceborne Thermal Emission and Reflection Radiometer
CERES	Clouds and Earth's Radiant Energy System
C&DHS	Command and data Handling Subsystem
CIL	Critical Items List
COMMS	Communications Subsystem
DAS	Direct Access Service
DER	Exceeds the derating criteria
EAS	Electrical Accommodations Subsystem
EPS	Electrical Power Subsystem
FMEA	Failure Modes and Effects Analysis
GN&CS	Guidance, Navigation and Control Subsystem
MISR	Multi–Angle Imaging Spectro–Radiometer
MODIS	Moderate–Resolution Imaging Spectrometer
MOPITT	Measurements of Pollution in the Troposphere
NSPAR	Non–standard Part Application Review
PDR	Preliminary design review
Ps	Probability of Success
PROPS	Propulsion Subsystem
SMS	Structures and Mechanisms Subsystem
SPF	Single point failure
TCS	Thermal Control Subsystem

(This page intentionally left blank.)

For: mhendric
Printed on: Mon, Jul 26, 1993 09:55:39
From book: 8652-072393*
Document: cil sheets
Last saved on: Fri, Jul 23, 1993 10:16:13

APPENDIX I

10 EOS–AM SPACECRAFT CIL SHEETS

EOS–AM SPACECRAFT CRITICAL ITEMS LIST

CRITICAL ITEM: Solar Array Drive **SUBSYSTEM:** EPS

PART NUMBER: 20008606G1 **COMPONENT/ASSY:** _____

APPLICATION: Rotation of the solar array and electrical interfaces between the solar array panel and the EPS

BASIS FOR CRITICAL STATUS/REFERENCE:

The SAD contains bearings and gears which are single point failures to the Spacecraft. The bearings are subject to failure resulting from the loss of lubricant or contamination. The gears are subject to failure from metal fatigue or contamination.

(Reference EPS Spacecraft PDR FMEA)

DESIGN APPROACH/RETENTION RATIONALE:

There is sufficient design margin to ensure a reliable design.

CONTROL/TESTS:

See attached pages.

STATUS/COMMENTS:

PREPARED/CONCURRENCE BY:

DESIGN ENGINEERING:	_____	DATE:	_____
QUALITY ENGINEERING:	_____	DATE:	_____
SYSTEMS ENGINEERING:	_____	DATE:	_____
RELIABILITY ENGINEERING:	W. Schweigert	DATE:	7/22/93

Solar Array Drive (20008606G1)

The Solar Array Drive (SAD) utilizes redundant lubrication systems using state of the art lubricants, precision bearings and redundant stepper motor windings. The SAD will be life tested for 2 times the mission duration.

Flight Test Plan

a. Full functional test

b. Random vibration at acceptance levels

c. Full functional test

d. Thermal testing

e. Full functional

SAD Bearings (20038269)

Controls

a. The SAD bearings are acquired from approved Martin Marietta Astro Space (Astro Space) sources of supply. Astro Space field Quality performs inspections and witnesses tests at the vendor facilities.

b. Dimensional inspection of bearings is performed.

c. Bearings are torque tested to assure minimal friction.

d. Bearing balls and races are 440C stainless steel.

e. Ball quality is assured at Grade 5 or better and TiC coated to reduce race wear.

f. Bearings are manufactured in a minimum class 1000 clean room environment.

g. Bearing lubrication has been selected for long life and low outgassing.

Slip Ring Assembly (PS20008542)

The SRA is designed to ensure reliable operation. The SRA is designed to operate at a low contact force which results in a low wear rate for the SRA. The SRA requires no lubrication to operate throughout the mission.

Controls

a. Preliminary test plan is submitted to Astro Space for approval prior to commencement of testing.

b. Run-in tests burnish rings and brushes to minimize debris accumulation in final application.

c. After disassembly, parts are cleaned and inspected to verify correct tracking of brushes and rings.

Test Plan

a. Visual examination at 10x minimum.

b. Electrical/functional testing.

c. Temperature cycling.

d. Inspection of piece parts.

e. Torque test on slip ring separates.

f. Electrical/functional testing.

SAD Gears (Harmonic Drive PS20034964)

Controls

a. The gears are supplied by Astro Space approved sources of supply.

b. Dimensional and material inspections are made with Astro Space Field Quality overview.

c. Verification of adequate lubrication is made at the assembly level, with visual inspection at subsequent levels of assembly.

d. Gears designed to operate under low stress levels.

EOS–AM SPACECRAFT CRITICAL ITEMS LIST

CRITICAL ITEM: Solar Array Mast **SUBSYSTEM:** EPS/SMS

PART NUMBER: TBD **COMPONENT/ASSY:** _____

APPLICATION: Primary SA structure support

BASIS FOR CRITICAL STATUS/REFERENCE:

The solar array mast longerons and battens are single point failures to the Spacecraft. The longerons and battens provide structural support for the solar array. The longerons have failure modes of breaking during launch and deforming during the operational mission phase. The battens have failure modes of separating from the lattice during the launch and operational mission phases.

(Reference EPS and SMS Spacecraft PDR FMEA)

DESIGN APPROACH/RETENTION RATIONALE:

These component and the application are typical of this type of design.

CONTROL/TESTS:

Material selection and controls, proof testing and deployment testing should prevent undetected flaws or cracks.

STATUS/COMMENTS:

The SAA subcontractor (TRW) will analyze the material degradation potential for the longerons. They will also perform a structural analysis to determine the effect on the system of having one batten fail.

More details will be provided for Spacecraft CDR.

PREPARED/CONCURRENCE BY:

DESIGN ENGINEERING:	_____	DATE:	_____
QUALITY ENGINEERING:	_____	DATE:	_____
SYSTEMS ENGINEERING:	_____	DATE:	_____
RELIABILITY ENGINEERING:	W. Schweigert	DATE:	7/22/93

EOS–AM SPACECRAFT CRITICAL ITEMS LIST

CRITICAL ITEM: 200 Volt Polypropylene Capacitor **SUBSYSTEM:** EPS

PART NUMBER: CFR12ALCXXXXKR **COMPONENT/ASSY:** _____

APPLICATION: 120V Bus filter

BASIS FOR CRITICAL STATUS/REFERENCE:

The 120V Bus filter capacitors will exceed the derating criteria of MIL–STD–975.

The affected CFR style capacitors are rated for 200 Vdc. As per MIL–STD–975, the maximum (60%) derated voltage is 120 Vdc. The capacitors will be operated at 120 Vdc, +/– 4%, with the possibility of single–event transients of: 132 Vdc for 100 µseconds and 180 V for 1 µsecond.

(Reference NSPAR–EOS–P–084)

DESIGN APPROACH/RETENTION RATIONALE:

Polypropylene capacitors higher than 200 Vdc have not been qualified for space. While 400 Vdc capacitors are commercially available (nothing between 200 and 400 Vdc exists), a new qualification program would have to be initiated. Further, use of 400 Vdc polypropylene capacitors would result in a 20 lb increase in Spacecraft weight due to the larger capacitors associated with the higher rating.

200–volt rated capacitors are suitable for the above–mentioned application for the following reasons:
1. As per MIL–C–55514 they are burned in at 240 Vdc (105 deg C).
2. As per MIL–C–55514 they have a dielectric withstanding voltage of 400 Vdc.
3. Since each capacitor is fused (50 required for cap bank) redundant capacitors will be added to increase cap bank reliability.

The 200 Vdc burn–in provides sufficient margin for DC voltage while the 400 Vdc dielectric provides margin for the 132/180 Vdc transients.

CONTROL/TESTS:

STATUS/COMMENTS:

Waiver EOD007 has been submitted and approved by GSFC for these capacitors.

PREPARED/CONCURRENCE BY:

DESIGN ENGINEERING:	_____	DATE:	_____
QUALITY ENGINEERING:	_____	DATE:	_____
SYSTEMS ENGINEERING:	_____	DATE:	_____
RELIABILITY ENGINEERING:	W. Schweigert	DATE:	7/22/93

EOS–AM SPACECRAFT CRITICAL ITEMS LIST

CRITICAL ITEM: Propellant Tank **SUBSYSTEM:** PROPS

PART NUMBER: 20001402P1 **COMPONENT/ASSY:** _____

APPLICATION: Storage of pressurized fuel

BASIS FOR CRITICAL STATUS/REFERENCE:

The propellant tank is a single point failure. The loss of propellant fuel as a result of leakage due to a weld failure would result in the loss of mission life.

(Reference PROPS Spacecraft PDR FMEA)

DESIGN APPROACH/RETENTION RATIONALE:

Possibility of failure of circumferential weld is small. Burst pressure is two time expected operating pressure. Fracture and stress analysis will be performed on the tank.

CONTROL/TESTS:

Tested in accordance with section 4.0 of PS20001402.

STATUS/COMMENTS:

This design has been qualified and flown but not at ASD.

PREPARED/CONCURRENCE BY:

DESIGN ENGINEERING:	T. Meyer	DATE:	7/22/93
QUALITY ENGINEERING:		DATE:	
SYSTEMS ENGINEERING:		DATE:	
RELIABILITY ENGINEERING:	W. Schweigert	DATE:	7/22/93

EOS–AM SPACECRAFT CRITICAL ITEMS LIST

CRITICAL ITEM: Propellant fuel lines **SUBSYSTEM:** PROPS

PART NUMBER: 2303170–62 & 2303299 **COMPONENT/ASSY:**

APPLICATION: Permits propellant flow through subsystem

BASIS FOR CRITICAL STATUS/REFERENCE:

The propellant fuel lines are single point failure. The loss of propellant as a result of leakage due to a weld failure would result in the loss of mission life.

(Reference PROPS Spacecraft PDR FMEA)

DESIGN APPROACH/RETENTION RATIONALE:

Key design features
Item 1 – 2303170–62 (stainless steel)
- 304L stainless steel
- MIL–T–8973 tubing, steel, corrosion and heat resistant
- 0.25 in OD 0.020 in wall thickness, 1.0 in bend radius
- 3046 to 3A1 7.5V transmission tubes used to weld to titanium lines
- Circumferential clamp mount

Item 2 – 2303299 (titanium)
- 3A1 2.5V titanium alloy
- AMS 493A seamless, hydraulic annealed
- 0.25 in OD, 0.016 wall thickness, circular cross section, 1.0 in bend radius
- 3A1 2.5V to 304L transition tubes used to weld to non–titanium lines and components
- 3A1 2.5V weldability to 6A! 4V well understood by ASD
- All tube ends acid etched per ASD 2280871 to reduce weld porosity
- Circumferential clamp mount

CONTROL/TESTS:

Item 1 (stainless steel) – Tested in accordance with 2303170
Item 2 (titanium) – Tested in accordance with 2303299

STATUS/COMMENTS:

This tubing has been tested and used on other similar ASD Spacecraft.

PREPARED/CONCURRENCE BY:

DESIGN ENGINEERING:	T. Meyer	DATE:	7/22/93
QUALITY ENGINEERING:		DATE:	
SYSTEMS ENGINEERING:		DATE:	
RELIABILITY ENGINEERING:	W. Schweigert	DATE:	7/22/93

EOS–AM SPACECRAFT CRITICAL ITEMS LIST

CRITICAL ITEM: Fuel filters **SUBSYSTEM:** PROPS

PART NUMBER: 2633648 **COMPONENT/ASSY:**

APPLICATION: Filter contaminants from fuel

BASIS FOR CRITICAL STATUS/REFERENCE:

The fuel filters are single point failures. The loss of propellant fuel as a result of a weld leakage would result in the loss of mission life.

(Reference PROPS Spacecraft PDR FMEA)

DESIGN APPROACH/RETENTION RATIONALE:

Possibility of failure of circumferential weld is small. Burst pressure is four times the expected operating pressure.

CONTROL/TESTS:

Tested in accordance with section 4.0 of PS2633648.

STATUS/COMMENTS:

This all titanium design has been qualified.

PREPARED/CONCURRENCE BY:

DESIGN ENGINEERING:	T. Meyer	DATE:	7/22/93
QUALITY ENGINEERING:		DATE:	
SYSTEMS ENGINEERING:		DATE:	
RELIABILITY ENGINEERING:	W. Schweigert	DATE:	7/22/93

EOS–AM SPACECRAFT CRITICAL ITEMS LIST

CRITICAL ITEM: SA deployments **SUBSYSTEM:** SMS

PART NUMBER: 20008514G1 **COMPONENT/ASSY:** _____

APPLICATION: Deploys solar array

BASIS FOR CRITICAL STATUS/REFERENCE:

The solar array deployment system contains several items which are single point failures to the Spacecraft. Some of these items are: longerons, battens, gears, bearings, mechanisms, latches, hinges, etc. The are several types of failure modes which would result in the failure of the individual items and would cause the failure of the solar array deployment. Some of the failure modes are: Galling of bearings, contamination, corrosion, cold welding, etc.

(Reference SMS Spacecraft PDR FMEA)

DESIGN APPROACH/RETENTION RATIONALE:

CONTROL/TESTS:

STATUS/COMMENTS:

Details of the subcontractor supplied information will be provided by Spacecraft CDR.

PREPARED/CONCURRENCE BY:

DESIGN ENGINEERING:	_____	DATE:	_____
QUALITY ENGINEERING:	_____	DATE:	_____
SYSTEMS ENGINEERING:	_____	DATE:	_____
RELIABILITY ENGINEERING:	W. Schweigert	DATE:	7/22/93

EOS–AM SPACECRAFT CRITICAL ITEMS LIST

CRITICAL ITEM: Discrete command hybrid **SUBSYSTEM:** Various

PART NUMBER: 23006351G1 **COMPONENT/ASSY:** _____

APPLICATION: Hybrid

BASIS FOR CRITICAL STATUS/REFERENCE:

The discrete command hybrid has transistors (2N2219A) and film chip resistors which exceed the derating criteria of the EOS–AM PAPL.

Item 1: A possible biasing condition exists or all 2N2219A npn small signal transistors which exceeds the derated emitter–base breakdown voltage Vbr(ebo). Reference EOS PAPL Appendix II Table 9.

Item 2: Power dissipation in the film chip base resistors of all 2N3467 transistors exceeds the maximum continuous derated power dissipation. Reference EOS PAPL Appendix II Table 7.

DESIGN APPROACH/RETENTION RATIONALE:

Item 1: Worst case analysis shows that under some conditions, an applied emitter–base voltage Vebo of 5.0 V (83% of rated) could be greater than the derated Vebo (75% of rated), but will not be greater than the rated Vebo of 6.0 V. Worst case maximum power dissipation in the junction during breakdown is current limited to 5.7 mW. This biasing condition will not occur as a continuous state of operation. Power is strobed on for approximately 55 msec at approximately a 50% duty cycle.

Item 2: Each resistor is part of one discrete command output circuit and dissipates power only when that particular command is selected. This is a pulse application rather than continuous operation. 42 discrete command hybrids were life tested for MILSTAR and 2 were life tested for GPS. The MILSTAR hybrid uses a 0.25W resistor and the GPS hybrid uses a 0.5W resistor. EOS will be using a 0.5W resistor. There are 64 resistors in question per hybrid. Only one failure was attributed to a resistor problem; the problem was a scratch on the resistor. The data shows therefor that: hours = 64 * 44 * 1000 = 2.816 * 10E6 hours without failures due to overstress. Satisfactory performance is expected.

CONTROL/TESTS:

STATUS/COMMENTS:

Waiver EOS–014 was submitted and approved by GSFC for the hybrids.

PREPARED/CONCURRENCE BY:

DESIGN ENGINEERING:	_____	DATE:	_____
QUALITY ENGINEERING:	_____	DATE:	_____
SYSTEMS ENGINEERING:	_____	DATE:	_____
RELIABILITY ENGINEERING:	W. Schweigert	DATE:	7/22/93

EOS–AM SPACECRAFT CRITICAL ITEMS LIST

CRITICAL ITEM: 200 Volt Ceramic Capacitor **SUBSYSTEM:** Various

PART NUMBER: 20009804P1 **COMPONENT/ASSY:** _____

APPLICATION: Filtering circuits

BASIS FOR CRITICAL STATUS/REFERENCE:

The multi–layer ceramic (MLC) capacitors located within various boxes will exceed the derating criteria of MIL–STD–975
The capacitors are used for filter applications for the 120 Vdc bus (typically within the Electric Power Conditioner Modules). These MLC capacitors are rated for 200 Vdc; MIL–STD–975 specifies a derated maximum (60%) applied voltage of 120 Vdc. However, the capacitors will operate at 120 Vdc +/– 4% with the possibility of single–event transients of: 132 Vdc for 100 µseconds and 180 Vdc for 1 µsecond.

(Reference NSPAR–EOS–P–058)

DESIGN APPROACH/RETENTION RATIONALE:

MLC capacitors higher than 200 Vdc have not been qualified for space. While 500 Vdc MLC capacitors are commercially available (nothing between 200 and 500 Vdc exists), a new qualification program would have to be initiated. Further, use of 500 Vdc MLC capacitors would result in a 40 lb increase in Spacecraft weight due to the higher voltage rating and a reduction in EPC packaging densities.

200–volt rated capacitors are suitable for the above–mentioned application for the following reasons:
1. As per MIL–C–123 they are burned in at 4000 Vdc (85 deg C).
2. As per MIL–C–123 they have a dielectric withstanding voltage of 500 Vdc.

The 400 Vdc burn–in provides sufficient margin for DC voltage while the 500 Vdc dielectric provides margin for the 132/180 Vdc transients.

CONTROL/TESTS:

STATUS/COMMENTS:

Waiver EOD006 has been submitted and approved by GSFC for these capacitors

PREPARED/CONCURRENCE BY:

DESIGN ENGINEERING:	_____	DATE:	_____
QUALITY ENGINEERING:	_____	DATE:	_____
SYSTEMS ENGINEERING:	_____	DATE:	_____
RELIABILITY ENGINEERING:	W. Schweigert	DATE:	7/22/93

(Preliminary)
Reliability Assessment
for EOS–AM Spacecraft
(PA–520)

20008654
CAGE No. 49671
30 July 1993

(Preliminary) Reliability Assessment EOS–AM Spacecraft (PA–520)

Prepared under:
Contract NAS5–32500
NASA Goddard Space Flight Center
Greenbelt, Maryland 20771

Prepared by:
Martin Marietta Corporation
Astro Space
P.O. Box 800
Princeton, New Jersey 08543–0800

DCC072293

REVISION LOG

This log identifies those portions of this document which have been revised since the original issue. Revised portions of each page, for the current revision only, are identified by marginal striping.

Revision	Paragraph Number(s) Affected	Rev. Date	Approval
Prelim		07/30/93	WS

TABLE OF CONTENTS

SECTION / PARAGRAPH	TITLE	PAGE
1	SCOPE	1
2	REFERENCE DOCUMENTS	3
2.1	Government Documents	3
2.1.1	NASA Documents	3
2.1.2	Military Documents	3
2.1.3	Other Government Documents	3
2.2	Non–Government Documents	3
2.2.1	Martin Marietta Astro Space Documents	3
2.2.2	Other Non–Government Documents	3
3	SPACECRAFT RELIABILITY ASSESSMENT OVERVIEW	5
3.1	Mission Success Definitions	5
3.1.1	Mission Success Definition for the Spacecraft Bus	5
3.1.2	Mission Success Definition for the EOS Instruments	5
3.2	Probability of Mission Success	5
3.3	Mission Phases	5
3.3.1	Pre–operational Mission Phase	7
3.3.2	Operational Mission Phase	7
3.4	Method of Analysis	7
3.4.1	Failure Rates	7
3.4.2	Temperatures	7
3.5	Reliability Block Diagram	7
3.6	Ground Rules and Assumptions	8
4	SPACECRAFT RELIABILITY ASSESSMENT SUMMARY	9
4.1	Spacecraft Bus Reliability Assessment Summary	9
4.2	Instrument Reliability Assessment Summary	9
5	SPACECRAFT BUS SUBSYSTEM RELIABILITY ASSESSMENTS	11

TABLE OF CONTENTS (Continued)

SECTION / PARAGRAPH	TITLE	PAGE
5.1	Electrical Power Subsystem (EPS) Reliability Assessment	11
5.1.1	Description	11
5.1.2	Functional Block Diagram	12
5.1.3	Reliability Block Diagram	12
5.1.4	Equipment Redundancy	12
5.1.5	Equipment Failure Rates	20
5.1.6	Updates to the Reliability Assessment	21
5.1.7	Probability of Success (Ps) Summary	21
5.1.8	Failure Rate Details	21
5.2	Propulsion Subsystem (PROPS) Reliability Assessment	25
5.2.1	Description	25
5.2.2	Functional Block Diagram	26
5.2.3	Reliability Block Diagram	26
5.2.4	Equipment Redundancy	26
5.2.5	Equipment Failure Rates	28
5.2.6	Updates to the Reliability Assessment	30
5.2.7	Probability of Success (Ps) Summary	30
5.2.8	Failure Rate Details	31
5.3	Command and Data Handling Subsystem (C&DHS) Reliability Assessment	32
5.3.1	Description	32
5.3.2	Functional Block Diagram	33
5.3.3	Reliability Block Diagram	33
5.3.4	Equipment Redundancy	37
5.3.5	Equipment Failure Rates	37
5.3.6	Updates to the Reliability Assessment	38
5.3.7	Probability of Success (Ps) Summary	38
5.3.8	Failure Rate Details	38
5.4	Communications Subsystem (COMMS) Reliability Assessment	40
5.4.1	Description	40
5.4.1.1	Communications Links and Link Parameters	40

TABLE OF CONTENTS (Continued)

SECTION / PARAGRAPH	TITLE	PAGE
5.4.1.2	Communications Services	40
5.4.2	Functional Block Diagram	42
5.4.3	Reliability Block Diagram	42
5.4.4	Equipment Redundancy	42
5.4.5	Equipment Failure Rates	45
5.4.6	Updates to the Reliability Assessment	45
5.4.7	Probability of Success (Ps) Summary	45
5.4.8	Failure Rate Details	45
5.5	Guidance, Navigation & Control Subsystem (GN&CS) Reliability Assessment	47
5.5.1	Description	47
5.5.2	Functional Block Diagram	48
5.5.3	Reliability Block Diagram	48
5.5.4	Equipment Redundancy	48
5.5.5	Equipment Failure Rates	48
5.5.6	Updates to the Reliability Assessment	52
5.5.7	Probability of Success (Ps) Summary	52
5.5.8	Failure Rate Details	52
5.6	Thermal Control Subsystem (TCS) Reliability Assessment	54
5.6.1	Description	54
5.6.2	Functional Block Diagram	55
5.6.3	Reliability Block Diagram	56
5.6.4	Equipment Redundancy	56
5.6.5	Equipment Failure Rates	56
5.6.6	Updates to the Reliability Assessment	56
5.6.7	Probability of Success (Ps) Summary	56
5.6.8	Failure Rate Details	61
5.7	Structures and Mechanisms Subsystem (SMS) Reliability Assessment	63
5.7.1	Description	63
5.7.2	Structures	63
5.7.2.1	Restraint/Deployment Mechanisms	63

TABLE OF CONTENTS (Continued)

SECTION / PARAGRAPH	TITLE	PAGE
5.7.2.2	Solar Array Drive (SAD)	63
5.7.2.3	Launch Vehicle Separation System	64
5.7.3	Reliability Block Diagram	64
5.7.4	Equipment Redundancy	64
5.7.5	Equipment Failure Rates	67
5.7.6	SMS Mission Phases	67
5.7.7	Updates to the Reliability Assessment	67
5.7.8	Probability of Success (Ps) Summary	67
5.7.9	Failure Rate Details	67
6	NOTES	69
6.1	Definitions	69
6.2	Acronyms and Abbreviations	69
	APPENDIX I	
10	CATALOG OF RELIABILITY EQUATIONS	71
10.1	RELIABILITY EQUATION DEFINITIONS	72
	APPENDIX II	
20	NON MIL-HDBK-217 FAILURE RATES	73

LIST OF FIGURES

FIGURE	TITLE	PAGE
1	EOS Mission Profile	6
2	EPS Functional Block Diagram	13
3	Electrical Power Subsystem (EPS) Reliability Block Diagram	14
4	SSU Reliability Block Diagram	15
5	PDU Reliability Block Diagram	16
6	Battery Assembly Reliability Block Diagram	17
7	Propulsion Module Functional Diagram	27
8	Propulsion Subsystem Schematic	28
9	Propulsion Subsystem Reliability Block Diagram	29
10	Command and Data Handling Subsystem Block Diagram	34
11	C&DH Subsystem Reliability Block Diagram	35
12	Housekeeping BDU Reliability Block Diagram	36
13	Instrument BDU Reliability Block diagram	36
14	Propulsion Module BDU Reliability Block Diagram	37
15	Communications Subsystem: Links	41
16	Communications Subsystem Functional Block Diagram	43
17	Communications Subsystem Reliability Block Diagram	44
18	GN&C Subsystem Functional Block Diagram	49
19	GN&C Subsystem Reliability Block Diagram	50
20	ACE Reliability Block Diagram	51
21	TCS Key Features	54
22	Thermal Control Subsystem Functional Block Diagram	55
23	Thermal Control Subsystem Reliability Block Diagram	57
24	CPHTS Reliability Block Diagram	58
25	Equipment Module Reliability Block Diagram	59
26	Distributed Housekeeping Reliability Block Diagram	60
27	HGA Deployment System Reliability Block Diagram	65
28	SA Deployment System Reliability Block Diagram	66

LIST OF TABLES

TABLE	TITLE	PAGE
I	Spacecraft Bus Reliability Assessment Summary	9
II	Instruments Reliability Assessment Summary	9
III	Solar Array Conditional Model Reliability Summary	20
IV	Electrical Power Subsystem Reliability Summary	22
V	SSU Remainder Reliability Summary	22
VI	PDU Reliability Summary	23
VII	Battery Assembly Reliability Summary	23
VIII	Individual Battery Reliability Summary	24
IX	Propulsion Subsystem Reliability Summary	31
X	C&DHS Major Components	33
XI	C&DH Subsystem Reliability Summary	39
XII	CTIU Reliability Summary	39
XIII	Housekeeping BDU Reliability Summary	39
XIV	Instrument BDU Reliability Summary	40
XV	Propulsion Module BDU Reliability Summary	40
XVI	Communications Subsystem Reliability Summary	46
XVII	GN&C Subsystem Reliability Summary	53
XVIII	ACE Reliability Summary	53
XIX	CPHTS Reliability Summary	61
XX	Equipment Module Reliability Summary	62
XXI	Distributed Housekeeping Reliability Summary	62
XXII	HGA Deployment Reliability Summary	68
XXIII	SA Deployment Reliability Summary	68

TBD LOG

ITEM	SECTION	PAGE	SUBJECT	RESP.	DUE
TBD–1	Table II	9	Instrument Reliability Assessments	GSFC	12/93
TBD–2	Appendix II	73	Non–MIL–HDBK–217 Failure Rates	W. Schweigert/ Subcontracts	S/C CDR

(This page intentionally left blank.)

1 SCOPE

This document provides the details of the preliminary EOS–AM Spacecraft Reliability Assessment. The reliability assessment reflects the baseline Spacecraft design for the Spacecraft Preliminary Design Review (PDR).

(This page intentionally left blank.)

2 REFERENCE DOCUMENTS

The following documents of the exact issue shown are the higher tier documents to this document.

2.1 Government Documents

2.1.1 NASA Documents

GSFC 420–05–02B 13 November 1992	Earth Observing System (EOS) Performance Assurance Requirements for the EOS–AM Spacecraft

2.1.2 Military Documents

MIL–HDBK–217E Notice 1 02 January 1992	Reliability Prediction of Electronic Equipment

2.1.3 Other Government Documents

2.2 Non–Government Documents

2.2.1 Martin Marietta Astro Space Documents

20004280 12 July 1991	Subcontractor Performance Assurance Requirements
20005396 15 May 1993	Contract End Item (CEI) Specification for the EOS–AM Spacecraft (SEP–101)
20005397 17 January 1992	Product Assurance Implementation Plan, (PA–100)
20008608 05 October 1992	Ground Rules and Assumptions for Reliability Assessments (PA–515)
EOS–DN–SE&I–010 10 June 1993	Baseline Description Document (BDD) for the EOS–AM Spacecraft
Source:	Martin Marietta Astro Space P. O. Box 800 Princeton, NJ 08543–0800

2.2.2 Other Non–Government Documents

RADC NPRD–91	RAC Nonelectronic Parts Reliability Data

(This page intentionally left blank.)

3 SPACECRAFT RELIABILITY ASSESSMENT OVERVIEW

The Spacecraft reliability assessment is used to evaluate various design configurations and assess the probability that the EOS mission will be successful.

Reliability assessments are performed throughout the Spacecraft design process. During the preliminary design phase, reliability predictions are performed using preliminary functional block diagrams and estimations of failure rates and duty cycles. Failure rates for individual elements are combined using applicable redundancy equations to predict the probability of mission success. These estimates provide insight into the evolving design and serve as a basis for redundancy planning and trades of candidate design configurations.

3.1 Mission Success Definitions

3.1.1 Mission Success Definition for the Spacecraft Bus

The minimum capability required for Spacecraft Bus mission success shall be defined as the capability of providing the Instruments with the minimum resources and services for the mission life of five years. The ability to transmit all recorded science data to the EOSDIS vis Ku–band TDRSS or X–band DAS links shall be considered the minimum science transmission capability required for mission success.

3.1.2 Mission Success Definition for the EOS Instruments

EOS Instruments must meet their individual requirements for data generation assuming the Spacecraft Bus provided resources are available and within specification. Any self–provided power conversions, thermal control, deployments, critical telemetry or data storage must be included in the Instrument reliability assessment. Instruments must provide the required science products for the five year mission or the mission duration required by the individual Instrument performance specification.

3.2 Probability of Mission Success

The probability of mission success of the Spacecraft Bus will, as a goal, not be less than 0.75 for a mission life of five years when operating continuously in the orbital environment.

3.3 Mission Phases

The EOS–AM mission is made up of distinct mission phases, each with its own characteristics and purpose. The mission phases of the EOS–AM Spacecraft and the significant events which define the transition from from one phase to another are shown in Figure 1.

The Spacecraft reliability assessment was performed for the pre–operational and the operational mission phases.

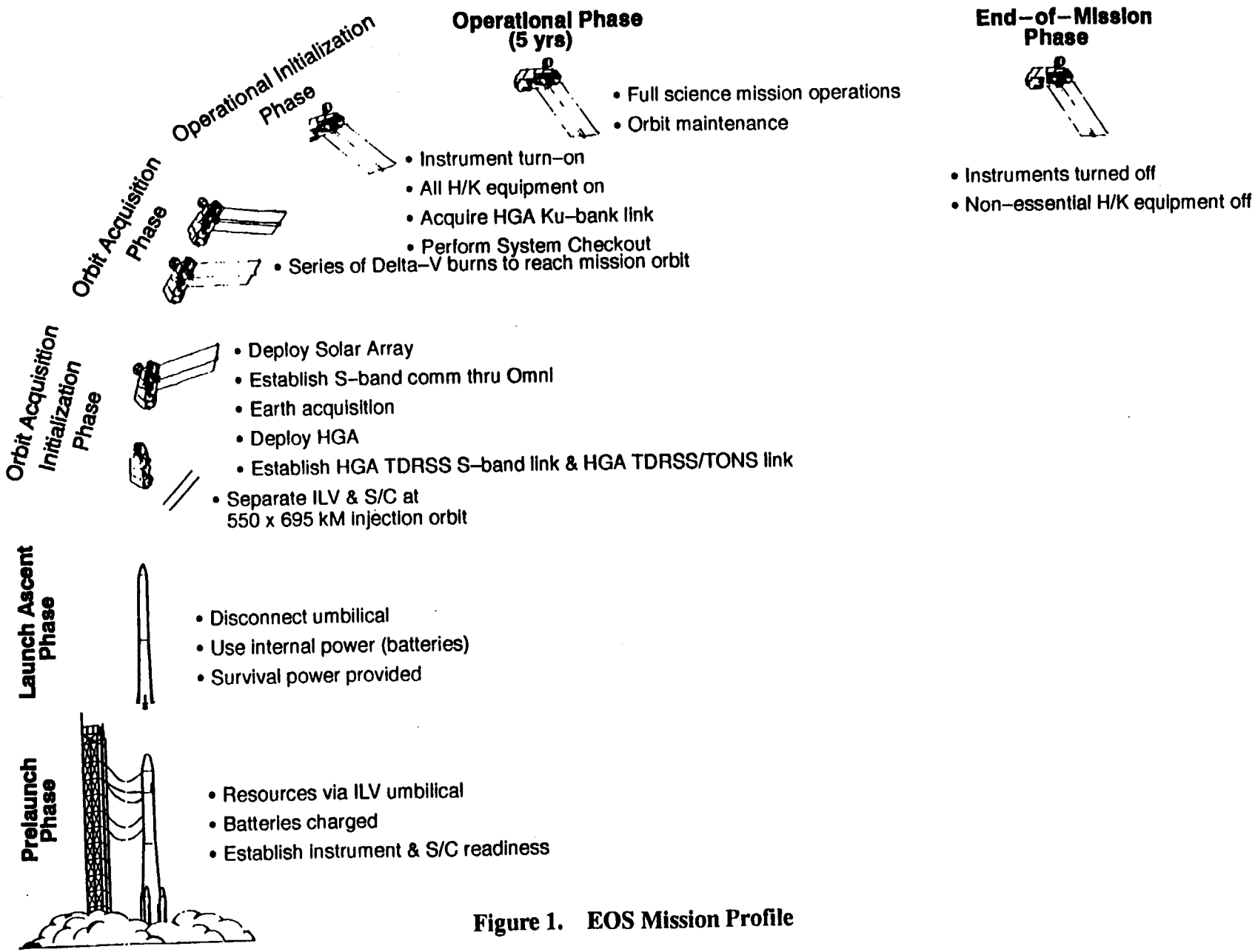

Figure 1. EOS Mission Profile

3.3.1 Pre–operational Mission Phase

The pre–operational phase includes the following mission phases: 1) launch/ascent phase, 2) orbit acquisition initialization phase, and 3) orbit acquisition phase. The launch/ascent phase was assumed to be 0.5 hours in duration. The duration of the remaining phases was assumed to be 120 hours. Only the equipment that is required to operate in this phase was included in the reliability calculations.

3.3.2 Operational Mission Phase

The operational phase includes the operational initialization phase and the operational phase for a duration of 5 years. This assumption accounts for the time necessary for the Spacecraft Bus to reach the operational capability to support all of the Instruments.

3.4 Method of Analysis

The preliminary reliability assessment was based on the part count method of MIL–HDBK–217.

3.4.1 Failure Rates

MIL–HDBK–217 is the baseline document for calculating electrical, electronic and electromechanical component failure rates. Failure rates for mechanical elements and elements not included in MIL–HDBK–217 are justified on the basis of comparison to industry standards, test results or on–orbit performance. RADC publication NPRD–91 is one source of failure rates which is used for components not listed in MIL–HDBK–217. Failure rates that are based on test results or on–orbit experience are required to be calculated with a lower one sided confidence level of at least 80%.

In accordance with the requirements of MIL–HDBK–217, Reliability Prediction of Electronic Equipment, the equipment failure rates during the launch/ascent phase were increased by a factor of 40 to account for the additional stresses which occur in this environment. For example, if a piece of equipment has a failure rate of 100 FITs in the operational phase, a failure rate of 4000 FITs is used for the launch/ascent phase. The factor of 40 is an average value, once the detailed reliability assessment is performed the actual launch/ascent factors for the specific components will be used.

3.4.2 Temperatures

Default temperatures are being used in the preliminary predictions until the thermal models have been performed on the actual Spacecraft design. Default mission average temperatures are 30 degrees centigrade unless previous experience with the design shows a higher or lower values.

3.5 Reliability Block Diagram

A reliability block diagram (reliability model) was created for each individual subsystem and the associated lower level components where applicable. The reliability block diagram reflects the redundancy configuration for the design and describes the equipment which is required for mission success.

3.6 Ground Rules and Assumptions

The following ground rules were followed in performing the Spacecraft reliability assessment:

a. The reliability prediction included all hardware elements and functions that are required for success of the EOS mission. Non–critical telemetry and functions that are not essential for mission success are excluded from the prediction.

b. Electrical and electronic assemblies that are used as unpowered standby redundant units are assigned a failure rate that is 10% of its active rate. Standby failure rates for mechanical and electromechanical assemblies are individually justified.

c. Failure rates used in the reliability assessment are assumed to be random (exponentially distributed). Wearout failure modes with mean life estimates of less that 7.5 years are included in the reliability models and justification of the failure distribution is provided.

d. Grade 2 Part Program: The EOS–AM Spacecraft is allowed to have Grade 2 or better parts in the equipment designs.

e. EAS – The failure rates for the individual box connecters are included in the failure rate of the individual box. The failure rates for the connectors between boxes are not presently included in the analysis. These interconnect connectors should not compromise the equipment redundancy, and should not have a significant impact to the overall reliability estimates. During the detailed design phase, the connectors will be addressed, and included in the reliability assessment if necessary.

4 SPACECRAFT RELIABILITY ASSESSMENT SUMMARY

4.1 Spacecraft Bus Reliability Assessment Summary

Table I summarizes the results of the Spacecraft Bus reliability assessment. The probability of success (Ps) is shown for each individual subsystem for both the pre–operational and the operational mission phases.

Table I. Spacecraft Bus Reliability Assessment Summary

	Pre–Op Phase Ps (120.5 Hours)	Operational Mission Phase Ps (5 Years)		
Subsystem	**Spacecraft PDR (9/93)**	**Subsystem Allocations**	**Spacecraft Bus PDR (6/92)**	**Spacecraft PDR (9/93)**
EPS	0.99999	0.97	0.9545	0.9774
PROPS	0.99999	0.99	0.9835	0.9900
C&DHS	0.99999	0.843	0.8441	0.8201
COMMS	0.99989	0.98	0.9865	0.9916
GN&CS	0.99998	0.96	0.8725	0.9520
TCS	0.99998	0.998	0.9969	0.9987
SMS	0.99995	0.999	0.9999	0.9999
EAS	—	—	—	—
Spacecraft Bus	**0.9998**	**0.759**	**0.6798**	**0.7481**
Bus Goal	N/A	0.75	0.75	0.75
Margin	N/A	0.09	–0.07	–0.002

4.2 Instrument Reliability Assessment Summary

The majority of Instrument reliability assessments were not receive in time to be included with this version of the Spacecraft reliability assessment. Table II summarizes the information which was received.

Table II. Instruments Reliability Assessment Summary

Instrument	Ps (5 years)
ASTER	(TBD–1)
CERES	(TBD–1)
MISR	(TBD–1)
MODIS	0.9229
MOPITT	(TBD–1)

(This page intentionally left blank.)

5 SPACECRAFT BUS SUBSYSTEM RELIABILITY ASSESSMENTS

This section describes the details of each of the individual subsystem reliability assessments.

5.1 Electrical Power Subsystem (EPS) Reliability Assessment

5.1.1 Description

The EPS provides all Spacecraft Instruments and subsystem housekeeping equipment with +120 Vdc ±4% power (at the user) during all mission phases. The EPS is modular to facilitate integration and ground test, and is designed to provide single–fault tolerance and a high level of redundancy.

The EPS provides the functions of energy generation, energy storage, power conversion, regulation, and distribution. The EPS utilizes a fully–regulated direct–energy–transfer (DET) configuration at +120 Vdc, which transfers power directly from the source to the loads with a minimum of losses and without any intermediate power conversion. This results in a system which is both light–weight and efficient, while providing ±4% regulation (at the user) for all loads. The EPS is required to provide 5.0 kW end–of–life (EOL) average, of which 2.53 kW is allocated to operate all electrical loads, and 2.47 kW is available to recharge the batteries while sunlit.

Power is generated by a single–wing photovoltaic solar–cell array which rotates via a solar array drive (SAD) in order to maximize solar exposure. Power for Spacecraft operation during eclipse is stored in two rechargeable 50 ampere–hour NiH_2 batteries. During the eclipse phase, (32.7 to 34.8 minutes), the batteries provide power to operate the Spacecraft loads via the battery power conditioners (BPCs), which combine discharge regulator and charge regulator functions in the same converter. During the sunlit portion of the orbit, (66.2 to 64.1 minutes), the BPCs charge the batteries, transforming energy from the +120 volt bus voltage level to the current required by the batteries. Excess solar array power is shunted via a sequential shunt unit (SSU).

The Spacecraft main power bus uses a star–radial power distribution at +120 Vdc via a single central distribution point in the power distribution unit (PDU) feeding subsidiary power distribution points in the various equipment modules. The central power point at the PDU is double insulated from the box chassis and the Spacecraft ground. By design, double insulation requires two hard credible failures to result in loss of a central power point and, therefore, the likelihood of this occurring is extremely remote.

The bus voltage is regulated and controlled via the power control function performed by the PDU. The effects of transient loads on voltage regulation is minimized through the use of a bus capacitor bank located at the bus regulation point in the PDU. Each capacitor in the PDU main capacitor bank is fused. Equipment module and subsystem component main power, including batteries and solar array, is returned to a central point in the PDU which is then referenced to the Spacecraft prime power reference (PPR). The EPS provides intermittent duty switch power to two pyro busses for firing the pyrotechnic actuators on the Spacecraft at the beginning of the mission.

Ground command and on–board computer control of the EPS elements is effected through the C&DHS via the Spacecraft control computer (SCC). The power management software calculates battery charge rates based on battery depth–of–discharge, desired C/D ratio, and solar array/sun orientation. In addition, this software will perform load shedding, based upon a predefined schedule, in the event of a failure or an excessive overload that would exceed the maximum battery depth of discharge of 30% for the normal operational mode.

5.1.2 Functional Block Diagram

The EPS functional block diagram is shown in Figure 2.

5.1.3 Reliability Block Diagram

The EPS reliability block diagram is shown in Figure 3.

The SSU reliability block diagram is shown in Figure 4.

The PDU reliability block diagram is shown in Figure 5.

The Battery Assembly reliability block diagram is shown in Figure 6.

5.1.4 Equipment Redundancy

The solar array consists of 24 parallel shunted circuits. Each circuit contains 8 individual strings of 190 GaAs series connected solar cells. The are a total of 192 strings (24 circuits x 8 strings/circuit) The solar array reliability analysis is a conditional analysis which considers the power margin at the end of life as the level of redundancy. The solar array has a total EOL power capability of 5304W (5000W with 11 strings failed). The total EOL charge and load requirement is 4770W. This gives the solar array a power margin of 534W.

The solar array conditional reliability analysis involves the solar array, SSU shunt and Power Module pairs, SAD power slip rings and SAD return slip rings. Solar array small hyper–velocity particle degradation of 2% is reflected in the end of life power margin. Solar array large hyper–velocity particle degradation is not included in this reliability analysis.

The SSU consists of the following:

a. 2–for–1 active redundant Command Decoder and EPC circuits,

b. 3–for–2 active redundant Op Amp circuit on the input of the SSU Shunt Analog Voter circuits. Each of these three op–amp circuits receives an input from its respective PDU Mode Controller output.

c. A Shunt Analog Voter circuit that uses a redundant transistor gating circuit configuration to generate the thirty one channel output shunt element control signals. With all three Mode Controller circuit inputs present, there are 3–for–1 active redundant transistor gating circuits. With a failed Mode Controller circuit input, the transistor circuit serving the two operational Mode Controller circuits is required for success.

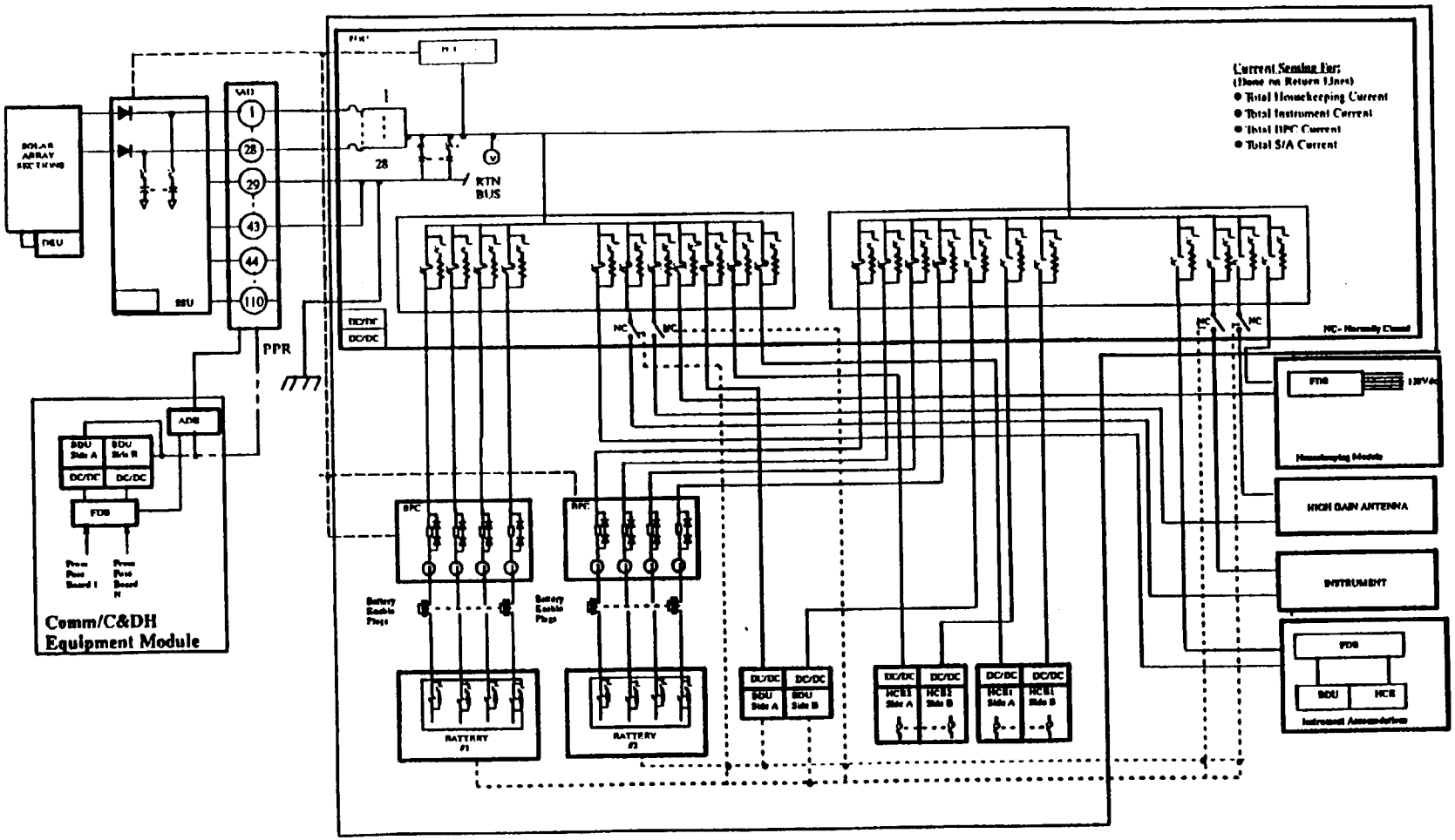

Figure 2. EPS Functional Block Diagram

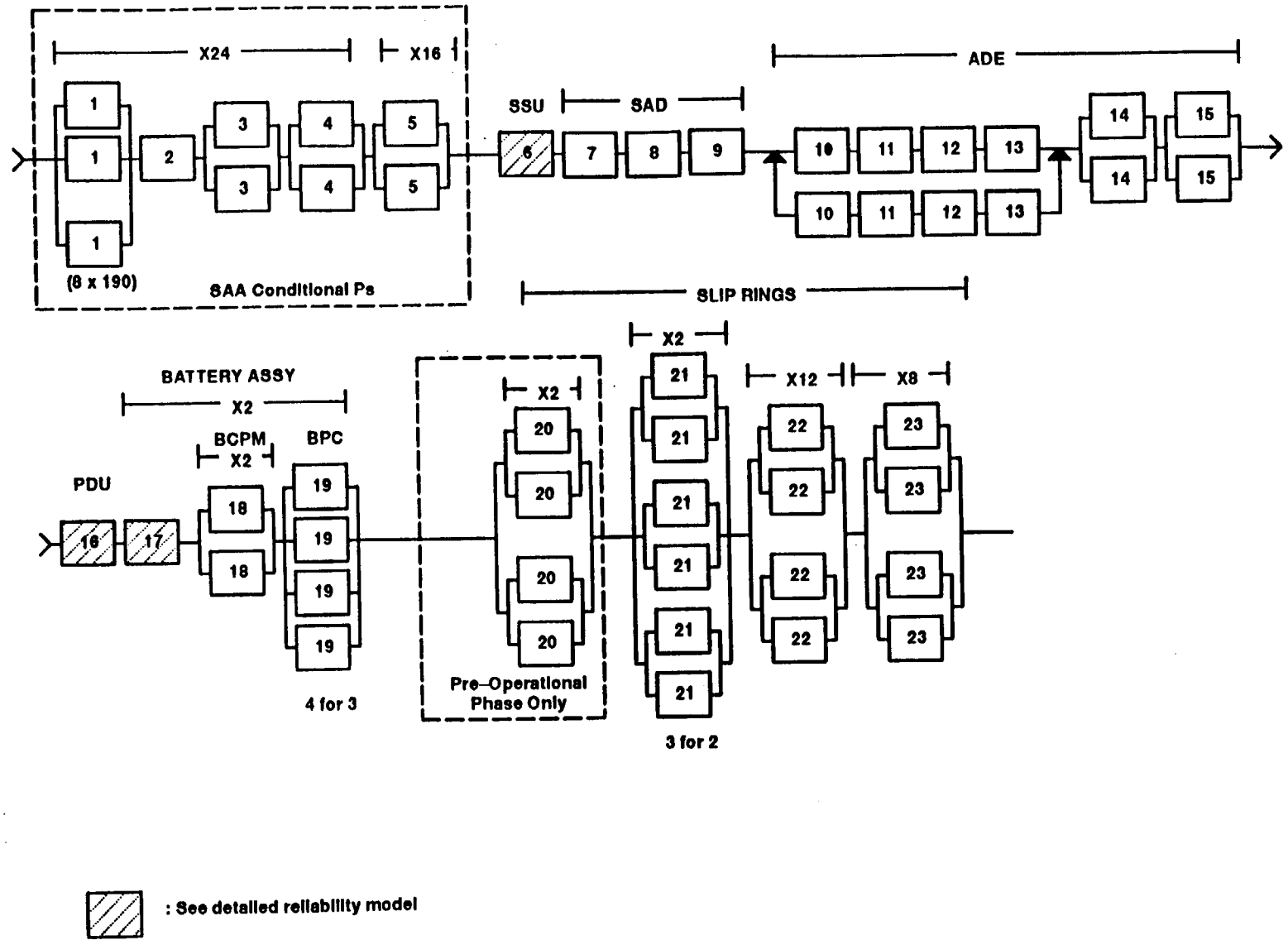

Figure 3. Electrical Power Subsystem (EPS) Reliability Block Diagram

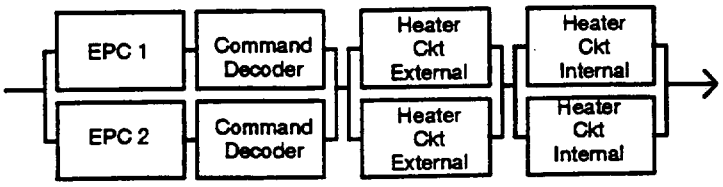

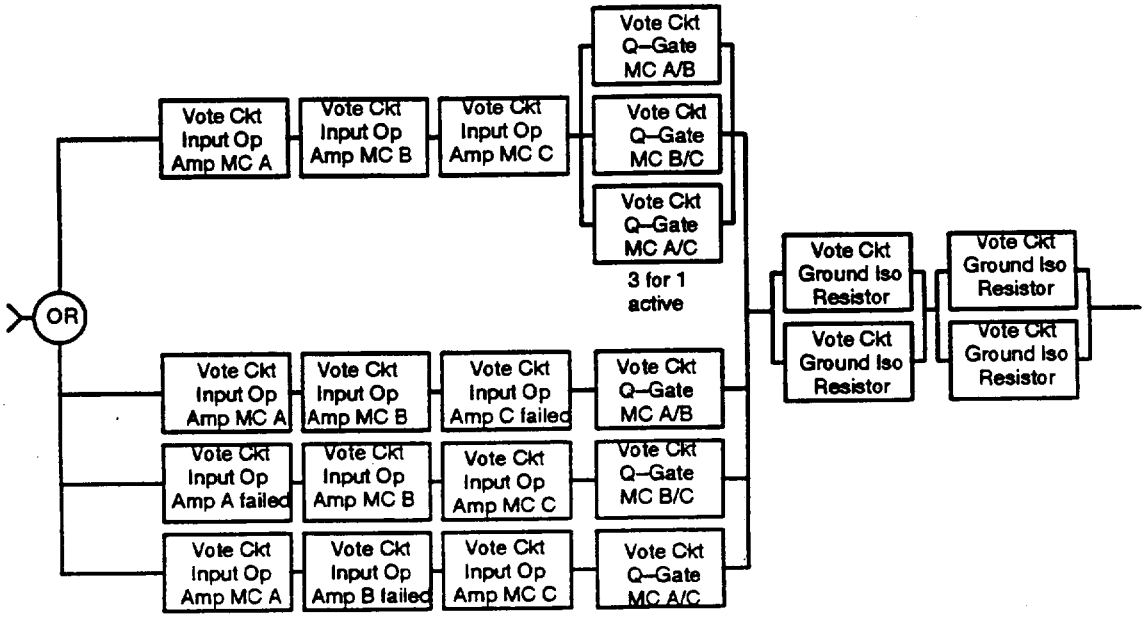

Figure 4. SSU Reliability Block Diagram

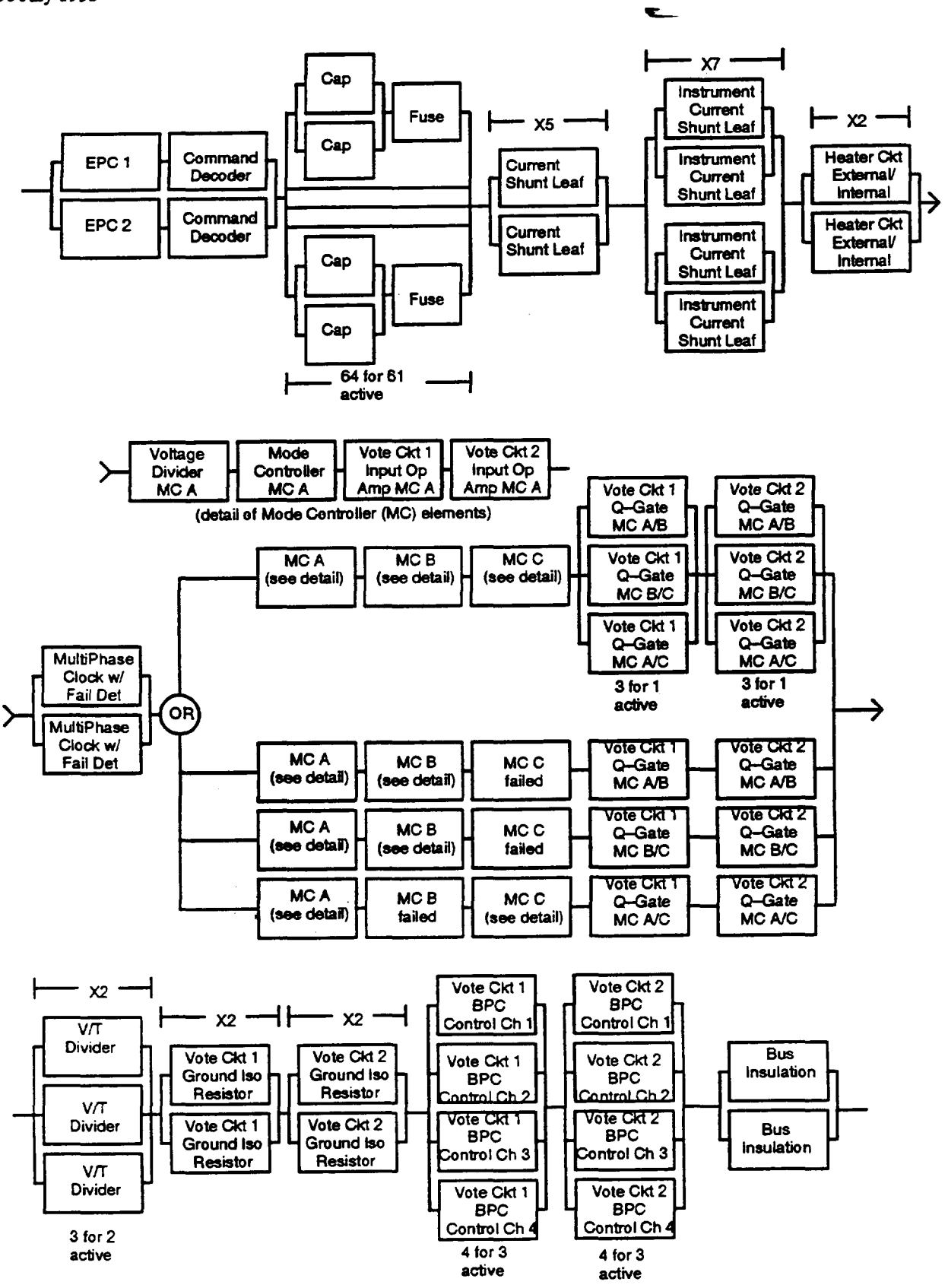

Figure 5. PDU Reliability Block Diagram

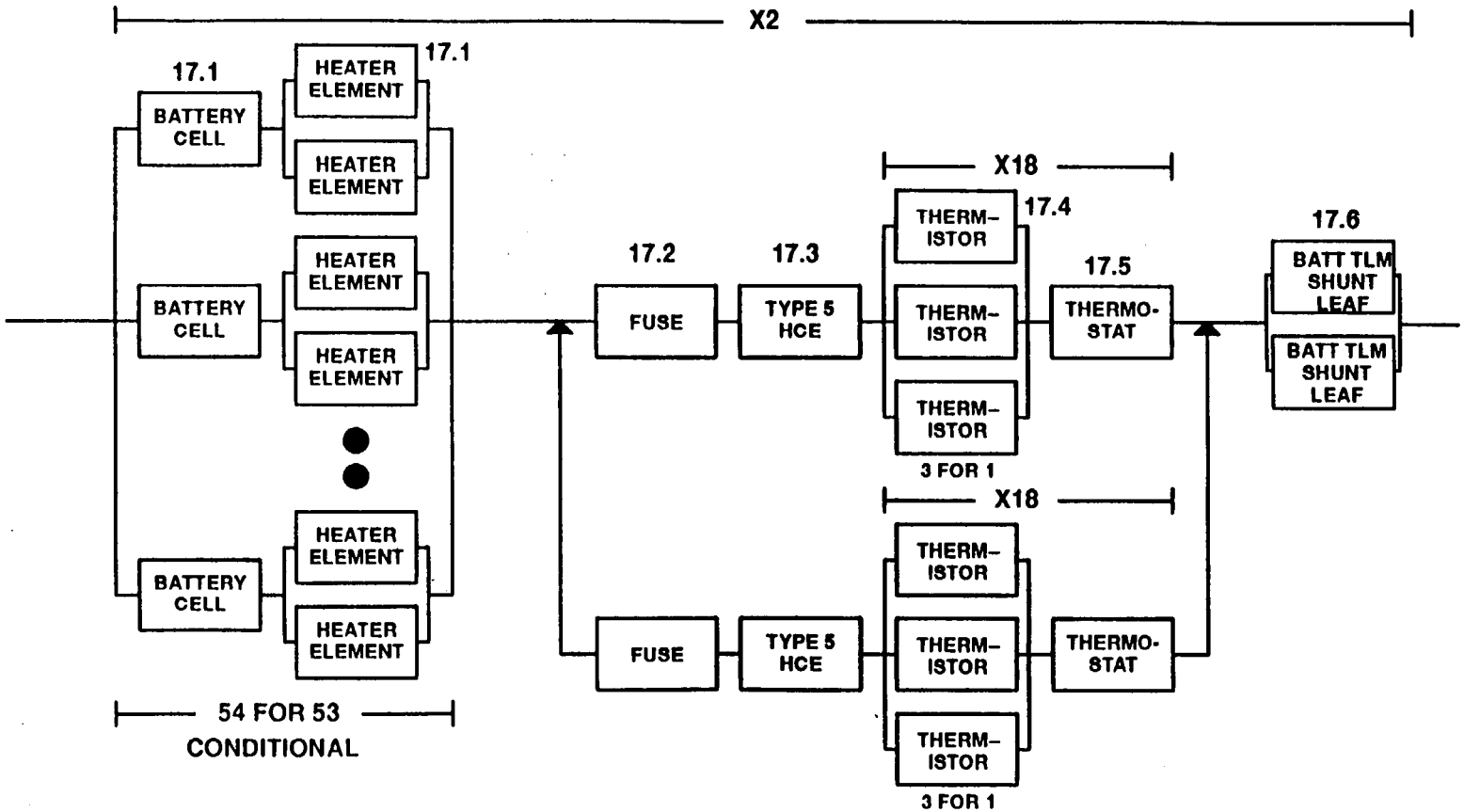

Figure 6. Battery Assembly Reliability Block Diagram

d. Quad–redundant (minimum) resistors are utilized in the Shunt Analog Voter circuits to isolate the common output (voted) signal from ground,

e. 24 Power Shunt Elements and their dedicated Power Module control electronics. The Shunt Elements and their Power Modules are conditionally redundant with the solar cell circuits which are not part of the SSU.

f. 2–for–1 active redundant heater circuits are provided both on the SSU exterior surface and on the SSU interior baseplate,

g. Fuses are provided for all instrument and housekeeping load feeds and are modeled with their respective loads,

h. SSU Telemetry circuits are provided but are considered non–mission–essential and are therefore not analyzed herein,

The SAD reliability analysis includes the stepping motor's bearings, 2–for–1 standby redundant windings, harmonic drive bearings, SAD shaft bearings and slip rings. The slip rings each have 2–for–1 active redundant brushes. The SAD is being included here for completeness of the power system but the SAD is actually part of the Structure and Mechanisms Subsystem.

Array drive electronics (ADE) are connected to the SAD stepping motor's primary and backup windings. For each winding there is a dedicated set of ADE circuits to perform the functions of; Rate Generation, Motor Drive, and the necessary Electric Power Conditioning. These winding dedicated circuits are modeled in series with their respective winding as 2–for–1 standby redundant. The ADE also includes 2–for–1 active redundant Safe Hold Circuits. These circuits can be switched to interface with either the primary or backup SAD winding dedicated circuits as described above. The Safe Hold Circuit cross–strap switching relays are also 2–for–1 active redundant.

The PDU consists of the following:

a. A 64–for–61 active redundant main bus fused filter capacitor bank. Every 2 capacitors in this assembly is provided with a fuse to preclude a single point failure due to an associated capacitor short.

b. Double insulated 120V bus bars

c. 5 DC current sensors (shunt type) with redundant leaves and connections:

    1. Battery Power Conditioner 1

    2. Battery Power Conditioner 2

    3. Solar Array 1

    4. Solar Array 2

    5. Fault current

d. 7 redundant DC current senors for the Instrument interfaces.

e. 2–for–1 active redundant Multi–Phase Clock circuits with Fault Detection Circuitry,

f. 2–for–1 active redundant Command Decoder Circuits. Each Command Decoder circuit includes Charge Rate (C/R) control and Voltage/Temperature (V/T) control circuits for both batteries,

g. 2–for–1 active redundant Voltage/Temperature Divider circuits for each battery,

h. 3–for–2 active redundant Mode Controller Circuits. The Mode Controller function senses the bus voltage at the power distribution point and creates an error voltage to control the two Battery Power Conditioners (BPC) and the Sequential Shunt Unit (SSU). Functionally in series with each Mode Controller circuit are; the voltage divider which is utilized at the voltage sensing point at the Mode Controller input, and at the Mode Controller output there is; one Op Amp circuit on the input of each of the two Battery Control Voter circuits.

i. The PDU Battery Control Voter circuit uses a conditionally redundant transistor gating circuit configuration to generate the four channel output BPC control signals to each of the two BPC elements. With all three Mode Controller circuit inputs present, there are 3–for–1 active redundant transistor gating circuits. With a failed Mode Controller circuit input, the transistor circuit serving the two operational Mode Controller circuits is required for success.

j. Quad–redundant (minimum) resistors are utilized in the Battery Control Voter circuits to isolate the common output (voted) signal from ground.

k. The BPC Voter circuit output channels are 4–for–3 active redundant. Each channel is dedicated to one of the four Battery Power Conditioner (BPC) channels (see BPC analysis).

l. 2–for–1 active redundant Electric Power Conditioners (EPC), either of which can supply the required power supplies for any configuration of redundant elements of the PDU(except for the command decoders),

m. 2–for–1 active redundant heater circuits are provided both on the PDU exterior surface and on the PDU interior baseplate,

n. Fuses are provided for all instrument and housekeeping load feeds as well as all BPC and SSU feeds. Fuses are modeled with their respective loads,

o. PDU Telemetry circuits are provided but are considered non–mission–essential and are therefore not analyzed herein,

p. The PDU provides relays to connect and disconnect instrument loads during the integration and test phase of the spacecraft. These relays are not used on–orbit and therefore are not analyzed herein.

The EOS battery reliability analysis includes two 50AH batteries. Each battery consists of 54 individual battery cells where each cell has a Thermally Activated Bypass Switch (TABS) for open cell failure bypass protection. Each battery can tolerate one cell failed open or one cell failed short. The Battery System can tolerate two cells failure short or open (one per panel). The battery reliability analysis also includes thermal control equipment and the battery telemetry current shunts.

The battery cell pressure monitor reliability analyses reflects in–production failure rates and is twice 2 for 1 active redundant for each battery.

The battery power conditioner (BPC) circuits are 4–for–3 active redundant.

The remaining SAD slip rings are stratified by function to account for various redundancy schemes.

The Fuse Distribution Box (FDB) fuses are reflected in the lower level box reliability predictions. The deployment activator electronic unit (DEU) is shown in the pre–operational phase solar array assembly deployment reliability analysis.

5.1.5 Equipment Failure Rates

The SAA reliability estimate is based on a conditional model where the reliability is based on the power margin. The power loss was determined for the individual circuit strings, harness connections, shunts, power slip rings and return slip rings and compared to the power margin. Table III summarizes the SAA reliability estimate. TRW, the SAA subcontractor provided the SAA PDR reliability assessment. Details from this analysis was included in the Spacecraft SAA assessment.

Table III. Solar Array Conditional Model Reliability Summary

Power Margin:	Number Years	Hours/Year	Number Equipment
534 W	5	8760	5

Index	Nomenclature	Quantity	Power Loss	Eff FITS
1	Ckt strings	192	27.62	190.0
2	Ckt harness connections	24	221	0.5
3	SSU shunts	24	221	134.5
4	Ckt power slip rings	24	221	.0684
5	Ckt return slip rings	12	442	.0684

Total Success Cases	84

Year	Ps
1	0.999996
2	0.999967
3	0.999861
4	0.999576
5	0.998966

The Battery Assembly reliability estimate included the TABS equipment and thermal control equipment. Failure rates for each component of an individual battery cell were determined based on manufacturer cell data.

The SSU, SAD, ADE, PDU, BCPM and the BPC failure rates were taken for the individual component PDRs.

The EPS has some component failure rates which are not included in MIL–HDBK–217. Appendix II provides a summary of these components.

5.1.6 Updates to the Reliability Assessment

The following significant changes have been made to the previous Spacecraft Bus, subsystem and individual component PDR reliability assessments:

a. The SAA model has been revised to reflect the current design.

b. The battery assembly has the TABS instead of the charge/discharge diodes.

c. The PSU is now included with the GN&C subsystem reliability assessment.

d. The SSU and the PDU EPCs are no longer cross–strapped with the command decoders.

e. The quantity of current shunts has increased for 5 to 19.

f. The battery assembly reliability model now includes the battery current telemetry shunt.

5.1.7 Probability of Success (Ps) Summary

The calculated EPS Ps for the launch/ascent mission phase is Ps = 0.999977 for 0.5 hours.

The calculated EPS Ps for the pre–operational mission phase is Ps = 0.999943 for 120.5 hours.

The calculated EPS Ps for the operational mission phase is Ps = 0.977418 for 5 years.

5.1.8 Failure Rate Details

Table IV shows the Electrical Power Subsystem operational mission phase reliability summary.

Table V shows the SSU remainder operational mission phase reliability summary.

Table VI shows the PDU operational mission phase reliability summary.

Tables VII and VIII show the Battery Assembly operational mission phase reliability summary.

Table IV. Electrical Power Subsystem Reliability Summary

5 YEARS MISSION DURATION

07/15/93 EPS SPACECRAFT PDR
OPERATIONAL MISSION PHASE

BLOCK	DESCRIPTION	DUTY CYCLE	FAIL RATE (FITS)	BOX RLBLTY	STDBY ACTIVE	INTRMDT Ps	INTRMDT Ps	FINAL Ps
1	GaAs CELL STRINGS & WELDS	100.0%	190					
2	HARNESS CONNECTIONS	100.0%	.5					
3	SSU SHUNTS & POWER MODULES	100.0%	134.5					
4	POWER SLIP RING (BRUSHES)	100.0%	40					
5	RETURN SLIP RING (BRUSHES)	100.0%	40					
	SOLAR ARRAY/SSU/PSR SUMMARY		IMPORT					.998966
6	SSU REMAINDER		IMPORT					.999237
7	STEPPING MOTOR ROTOR BEARINGS	100.0%	10	.9995618	X2			.999124
8	SAD HARMONIC DRIVE	100.0%	40	.9982485				.998249
9	SAD SHAFT BEARINGS	100.0%	10	.9995618	X4			.998249
10	ADE EPC	100.0%	419	.9818049				
11	ADE MDB	100.0%	252.5	.9889952				
12	ADE RG CKT 1 P/O RGB	100.0%	213.76	.9906757				
13	STEPPING MOTOR WINDINGS	100.0%	10	.9995618	X2	.9991239		
	SUBTOTAL ADE			.9611036	2/1 SB			.999158
14	ADE SE CKT 1 P/O SHB	100.0%	140.48	.9938624	2/1 A			.999962
15	ADE EPC/SHBX XSTRAP RLY 1 P/O RGB	100.0%	31.16	.9986353	2/1 A			.999998
16	POWER DISTRIBUTION UNIT		IMPORT					.999078
17	BATTERY CELL/TABS/THERMAL	100.0%	IMPORT					.990590
18	BATTERY CELL PRESSURE MONITOR	100.0%	44.4	.9980561	2/1 A X4	.9999924		.999985
19	BPC POWER MODULE	100.0%	495.5	.9785188	4/3 A X2	.9973100		.994627
20	SSU/DEU FEED& RTN SLIP RING BRUSHES	100.0%	40	.9982485	PRE-OP			
21	CTRL A,B,C SLIP RING BRUSHES	100.0%	40	.9982485	2/1(3/2)	.9999969	1.000000	1.000000
22	SERIAL I/O & RTN SLIP RING BRUSHES	100.0%	40	.9982485	2/1 X12	.9999969	1.000000	1.000000
23	CSS & RTN SLIP RING BRUSHES	100.0%	40	.9982485	2/1 X8	.9999969	1.000000	1.000000
							EPS TOTAL	.977418

Table V. SSU Remainder Reliability Summary

BLOCK	DESCRIPTION	DUTY CYCLE	FAIL RATE (FITS)	BOX RLBLTY	STDBY ACTIVE	INTRMDT Ps	INTRMDT Ps	FINAL Ps
6.1	SSU EPC	100.0%	419	.9818049				
6.2	COMMAND DECODER	100.0%	215.42	.9906036				
	SUB-TOTAL EPC/COMMAND DECODER			.9725795	2/1 A			.999248
6.3	HEATER CKT EXTERNAL	100.0%	16.32	.9992850	2/1 A			.999999
6.4	HEATER CKT INTERNAL	100.0%	16.32	.9992850	2/1 A			.999999
6.5	VOTE CKT INPUT OP-AMP MC A	100.0%	4.45	.9998050				
6.6	VOTE CKT INPUT OP-AMP MC B	100.0%	4.45	.9998050				
6.7	VOTE CKT INPUT OP-AMP MC C	100.0%	4.45	.9998050				
6.8	VOTE CKT Q GATE MC A/B	100.0%	2.09	.9999084				
6.9	VOTE CKT Q GATE MC B/C	100.0%	2.09	.9999084				
6.10	VOTE CKT Q GATE MC A/C	100.0%	2.09	.9999084				
	SUBTOTAL VOTE CKTS- CONDITIONAL							.999990
6.11	VOTE CKT GROUND ISO RESISTOR	100.0%	.26	.9999886	2/1 A X2			1.000000
							SSU REMAINDER TOTAL	.999237

Table VI. PDU Reliability Summary

BLOCK	DESCRIPTION	DUTY CYCLE	FAIL RATE (FITS)	BOX RLBLTY	STDBY ACTIVE	INTRMDT Ps	INTRMDT Ps	FINAL Ps
16.1	PDU EPC	100.0%	419	.9818049				
16.2	COMMAND DECODER W/CLAMPS	100.0%	241.48	.9894729				
	SUB-TOTAL EPC/COMMAND DECODER			.9714694	2/1 A			.999186
16.3	CAPACITOR BANK 64/61	100.0%	9.43	.9995868	64/61 A			1.000000
16.4	CURRENT SHUNT BPC1	100.0%	5.52	.9997581	2/1 A	.9999999		
16.5	CURRENT SHUNT BPC2	100.0%	5.52	.9997581	2/1 A	.9999999		
16.6	CURRENT SHUNT SOLAR ARRAY 1	100.0%	5.52	.9997581	2/1 A	.9999999		
16.7	CURRENT SHUNT SOLAR ARRAY 2	100.0%	5.52	.9997581	2/1 A	.9999999		
16.8	CURRENT SHUNT FAULT CURRENT	100.0%	5.52	.9997581	2/1 A	.9999999		
16.9	CURRENT SHUNTS INSTRUMENTS	100.0%	5.52	.9997581	2/1 A X7	.9999999	1	
	SUBTOTAL SHUNTS			.9999997				1.000000
16.10	HEATER CKT EXTERNAL	100.0%	16.32	.9992850	2/1 A			.999999
16.11	HEATER CKT INTERNAL	100.0%	16.32	.9992850	2/1 A			.999999
16.12	MULTI PHASE CLOCK/FAIL DET	100.0%	224.27	.9902195	2/1 A			.999904
16.13	MODE CONTROLLER (CONDITIONAL)		IMPORT					.999990
16.14	V/T DIVIDER 1	100.0%	4.46	.9998046	3/2 A			1.000000
16.15	V/T DIVIDER 2	100.0%	4.46	.9998046	3/2 A			1.000000
16.16	VOTE CKT 1 GROUND ISO RESISTOR	100.0%	.26	.9999886	2/1 A X2			1.000000
16.17	VOTE CKT 2 GROUND ISO RESISTOR	100.0%	.26	.9999886	2/1 A X2			1.000000
16.18	VOTE CKT 1 BPC CONTROL	100.0%	4.46	.9998046	4/3 A			1.000000
16.19	VOTE CKT 2 BPC CONTROL	100.0%	4.46	.9998046	4/3 A			1.000000
16.20	SINGLE BUS INSULATION	100.0%	1	.9999562	2/1 A			1.000000
							PDU TOTAL	.999078

Table VII. Battery Assembly Reliability Summary

* CAN TOLERATE 1 CELL FAILED OPEN OR 1 CELL FAILED SHORT PER BATTERY
* INCLUDES TABS

BLOCK	DESCRIPTION	DUTY CYCLE	FAIL RATE (FITS)	BOX RLBLTY	BOX ACTIVE	STDBY Ps	INTRMDT Ps	FINAL Ps
17.1	BATTERY CELLS/HEATERS	100.0%						.996285
17.2	FUSE	100.0%	9	.9996057				
17.3	ECE TYPE 5	100.0%	960	.9588007				
17.4	THERMISTOR	100.0%	10.5	.9995399	3/1 A X18	1.000000		
17.5	THERMOSTAT	100.0%	1.18	.9999483	X18	.9990696		
	SUB-TOTAL			.9575309	2/1 SB			.998995
17.6	BATTERY TLM SHUNT	100.0%	5.52	.9997581	2/1 A	.9999999		1.000000
	SINGLE BATTERY/TEMP CONTROL							.995284
	TWO BATTERY/TEMP CONTROL							.990590

Table VIII. Individual Battery Reliability Summary

EOS ELECTRICAL POWER SUBSYSTEM - BATTERY 6/18/93 120.5 43825

ASSUMPTIONS:
- 2 50 AMP HOUR BATTERIES
- 54 CELLS PER BATTERY
- TOLERATE "1 CELL FAILED OPEN" WITH FUNCTIONING BYPASS SWITCH PER BATTERY
- USE TABS AND DIODE FOR OPEN CELL BYPASS
- TOLERATE "1 CELL FAILED SHORT" PER BATTERY
- 40 POSITIVE & 40 NEGATIVE PLATES PER CELL & NO OPEN PLATES TOLERATED!!

BLOCK#	DESCRIPTION	DUTY CYCLE (%)	FITS	QTY	LAMBDA E	LAMBDA D	PRE-OP PHASE	5
1	EACH CELL (OK)	100	**	1	0	0	.999996	.998665
2	EACH CELL (OPEN)	100	*	1	0	0	.000003	.001099
3	EACH CELL (SHORT)	100	5.4	1	5.4e-9	5.4e-10	.000001	.000237
4	EACH DIODE (OK)	100	2	1	2e-9	2e-10	1.000000	.999912
5	EACH DIODE (OPEN)	100	.5	1	5e-10	5e-11	.000000	.000022
6	EACH DIODE (SHORT)	100	1.5	1	1.5e-9	1.5e-10	.000000	.000066
7	EACH TABS (OK)	100	19	1	1.9e-8	1.9e-9	.999998	.999168
8	EACH TABS (OPEN)	100	13.3	1	1.33e-8	1.33e-9	.000002	.000583
9	EACH TABS (SHORT)	100	5.7	1	5.7e-9	5.7e-10	.000001	.000250
	EACH COMPOSITE CELL P(OK)		2				.999995	.998350
	COMPOSITE CELL OPEN & FUNCTIONING TABS		.5				.000003	.001098
	COMPOSITE CELL/DIODE/TABS - SHORT		1.5				.000002	.000551
	COMPOSITE CELL FAILED OPEN		1.9e1				5.03e-12	6.641e-7
	EACH BATTERY (54 CELLS) & CELL HEATERS		13.3				1.000000	.996285
	BOTH BATTERIES & CELL HEATERS		5.7				1.000000	.992584
	BOTH BATTERIES WITHOUT TABS/DIODE WITH THERMAL EQUIP (AND TOLERATE 1 SHORTED CELL/BAT)						.999674	.887927

CELL OPEN ANALYSIS 120.5 43825
- 40(+) & 40(-) PLATES/CELL
- CAN'T TOLERATE ANY PLATE FAILURES

BLOCK#	DESCRIPTION	DUTY CYCLE (%)	FITS	QTY	LAMBDA E	LAMBDA D	PRE-OP PHASE	5
1	POSITIVE ELECTRODE PLATES/TABS/WELDS	100	.286	1	2.86e-10	2.86e-11		
2	NEGATIVE ELECTRODE PLATES/TABS/WELDS	100	.297	1	2.97e-10	2.97e-11		
3	PLATE TAB TO BUS BAR WELD (+&-)	100	.006	1	6e-12	6e-13	.999997	.998968
4	ELECTROLYTE	100	0	1	0	0	1.000000	1.000000
5	PRESSURE VESSEL	100	1.32	1	1.32e-9	1.32e-10	1.000000	.999942
6	CELL CIRCUIT CONTINUITY	100	.2	1	2e-10	2e-11	1.000000	.999991
							.999997	.998901

INDIVIDUAL BATTERY CELL THERMAL EQUIP 120.5 43825

BLOCK#	DESCRIPTION	DUTY CYCLE (%)	FITS	QTY	LAMBDA E	LAMBDA D	PRE-OP PHASE	5
1	HEATER ELEMENT	100	15	1	1.5e-8	1.5e-9	1.000000	1.000000
							1.000000	1.000000

5.2 Propulsion Subsystem (PROPS) Reliability Assessment

5.2.1 Description

The PROPS is divided into primary and redundant branches with fully redundant Propulsion Module Electronics Assemblies (PMEAs), attitude control thrusters, and latching valves. Functionally redundant and cross–strapped delta–V thrusters are utilized to meet all EOS orbit acquisition and maintenance requirements. All subsystem commands are received by the PMEA which provides signal conditioning and control functions required to drive the thrusters, heater circuits, and latching valves. Power conditioned from 120 V to 28 V is provided to each PMEA which directs and controls power distribution to all subsystem components.

The subsystem is comprised of a single 40.6–x–33.8 inch spheroidal propellant tank with a maximum capacity of 760 lb_m, twelve attitude control thrusters, four delta–V thrusters, two service valves, a pair of latching isolation valves, two filters, and a pressure transducer. An elastomeric diaphragm within the tank expels propellant by providing a separation barrier between the pressurant and hydrazine fuel. Individual servicing of propellant and pressurant is achieved via separate and dedicated service valves. This tank and manifold configuration permits loading and unloading of the subsystem in either a vertical or horizontal positions. Engine half–systems are interconnected by a cross–coupling manifold, which makes available the full propellant load to either set of thrusters. Latching valves can are utilized to isolate the thrusters from a particular propellant source, if necessary, and to provide a third inhibit to propellant leakage. The all welded subsystem manifold is constructed of both titanium and stainless steel to minimize the required number of transition tubes.

A thermal balance method is utilized to provide an extremely accurate estimate of fuel remaining and allows periodic updates with increasing accuracy throughout Spacecraft life. This non–intrusive application of the existing thermal control and telemetry subsystems is based on the change in temperature of the tank and fuel system over a given period of time. Since propellant mass is the only variable in the tank/fuel system following pressurization lockout, the specific heat of the system is directly related to propellant remaining. Calibration readings are taken of the empty tanks prior to launch and in a fully loaded condition immediately after separation. Propellant gauging accuracies will vary from 3% of the system capacity at BOL to 0.1% at one year before tank depletion is scheduled to occur. Two additional methods are provided to supply a redundant estimation of remaining propellant, the pressure–volume–temperature (PVT) method and the book–keeping method.

The PMEA provides signal conditioning and control functions required to drive the monopropellant thrusters, heater circuits, and latching valves from standard interface circuits provided by the BDU and the serial input of the ACE interface. The PMEA also provides the signal conditioning required to convert output level signals from temperature sensors and pressure transducers associated with the Propulsion Subsystem into standard analog voltage signals compatible with the BDU interface circuits.

The Electrical Power Conditioners receive primary and redundant 120 V fused power and return feeds from the 120 V fuse distribution boxes. Electrical isolation shall be maintained between the redundant feeds. The EPC's output interfaces directly to the 28 V FDBs before being distributed to propulsion module components.

The EPCs and some of the thermal control components are technically part of the EPS and the TCS but are included as part the propulsion module. In the Spacecraft reliability assessment these components are included with the PROPS calculations because a failure of one of these components would directly impact the operation of the PROPS.

5.2.2 Functional Block Diagram

The propulsion module functional block diagram is shown in Figure 7.

The propulsion subsystem schematic is shown in Figure 8.

5.2.3 Reliability Block Diagram

The propulsion subsystem reliability block diagram is shown in Figure 9.

5.2.4 Equipment Redundancy

The propellant tank and the fuel lines are non–redundant serial elements in the reliability model. The failure of these components will result in the loss of the mission, however, the chances of a failure is extremely remote.

The service valves have redundant seats to prevent the loss of propellant. The service valve seats are shown in 2 for 1 active redundancy.

The fuel filter, latch valves 5 lbf REAs, 1 lbf REAs, PMEA and the 120V/28V EPCs are modelled in 2 for 1 active redundancy. The failure of any of theses components will result in the loss of a single half thruster system. The back–up half system would then be used for the remainder of the mission.

The thermal control components: fuses, thermostats, heater elements, HCEs are modelled in a 2 for 1 stand–by redundancy configuration.

The current reliability model reflects a conservative approach to the reliability assessment because the cross–strapping of the 5 lbf REAs with the PMEA is not accounted for in the model. Only one set of 5 lbf thrusters (1 & 2 or 3 & 4) are required to survive for mission success. This will not have a significant impact on the overall subsystem Ps estimate. During the detailed design phase the reliability assessment will be revised to account for the redundancy if in is determined to be necessary.

The thermal control section of the reliability model is slightly optimistic. The reliability model shows complete cross–strapping of the primary and back–up thermal control components. In the current design all of the primary thermal control components (HCEs, thermostats, heater elements etc.) are power by the primary PMEA. The back–up PMEA does not supply power to the primary

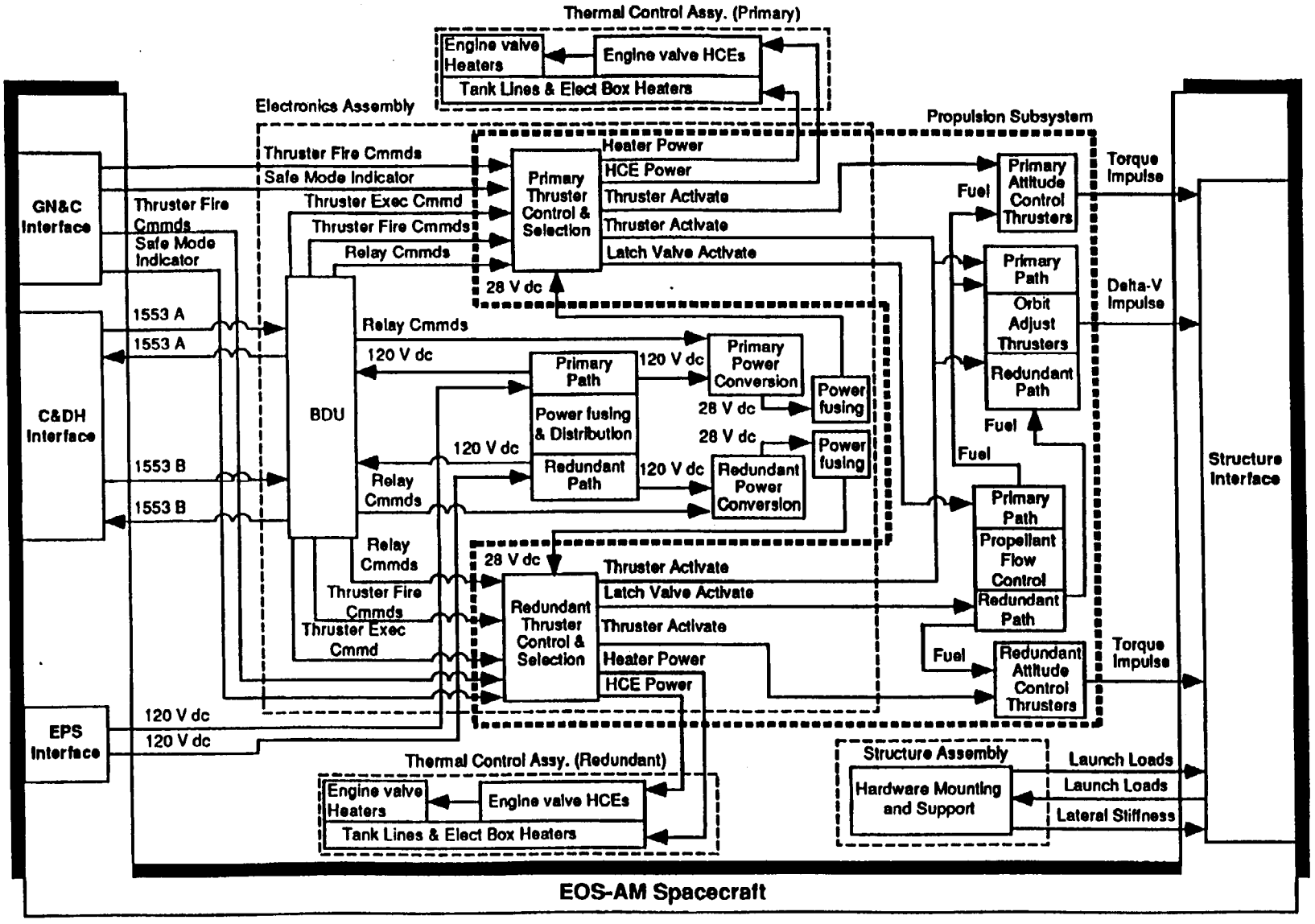

Figure 7. Propulsion Module Functional Diagram

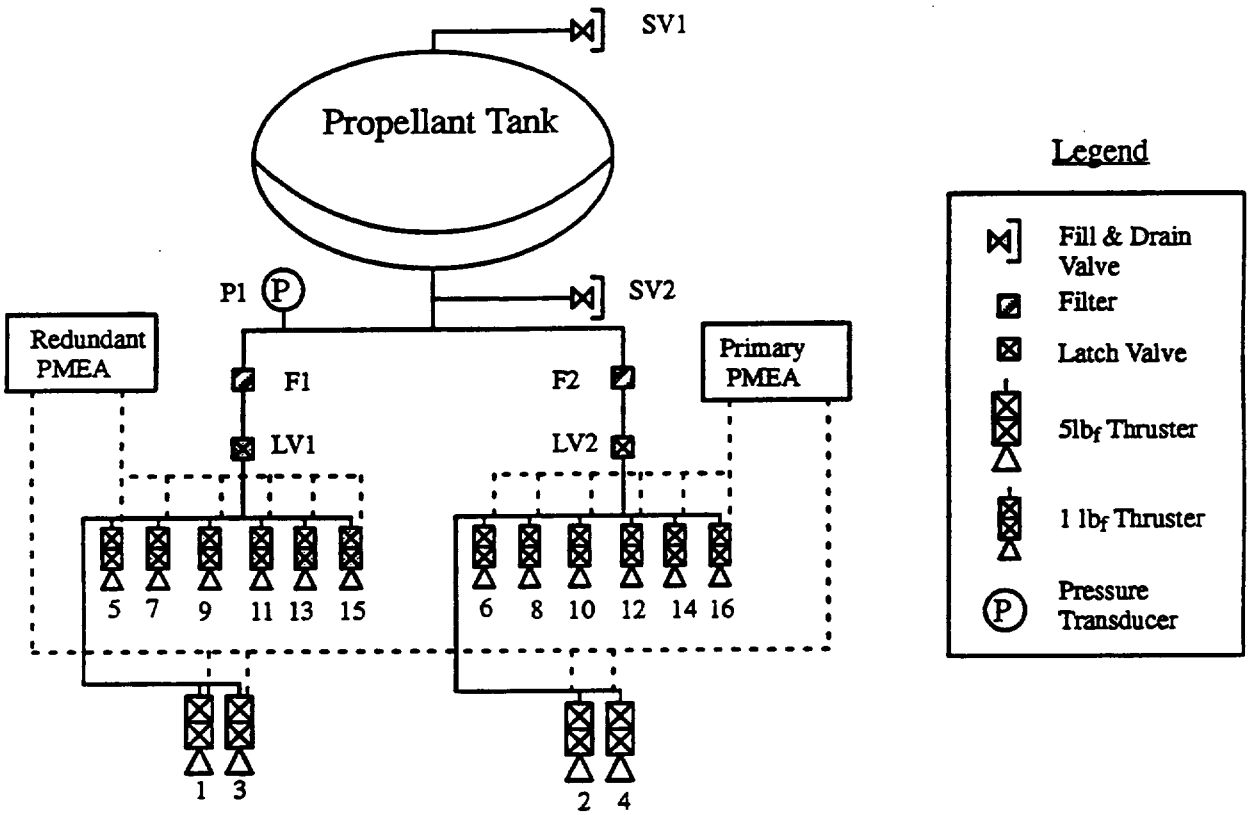

Figure 8. Propulsion Subsystem Schematic

thermal control components. Therefore, if the primary HCE were to fail, all of the primary thermal control equipment would then be unable to be powered. However, the back–up PMEA could then be turned on to power the back–up thermal control equipment, and the option would be available to then turn the back–up PMEA off and turn the primary PMEA back on again. Once again during the detailed design phase the reliability model will be revised to reflect this information.

The pressure transducer is not included in the reliability assessment, The pressure transducer is considered non–critical to the reliability mission success criteria for the program.

5.2.5 Equipment Failure Rates

The majority of the PROPS subcontractor supplied reliability data was not available for this version of the Spacecraft reliability assessment. When the data becomes available it will be incorporated into the PROPS reliability assessment. The failure rates which were used in the PROPS reliability assessment are described in the following paragraphs.

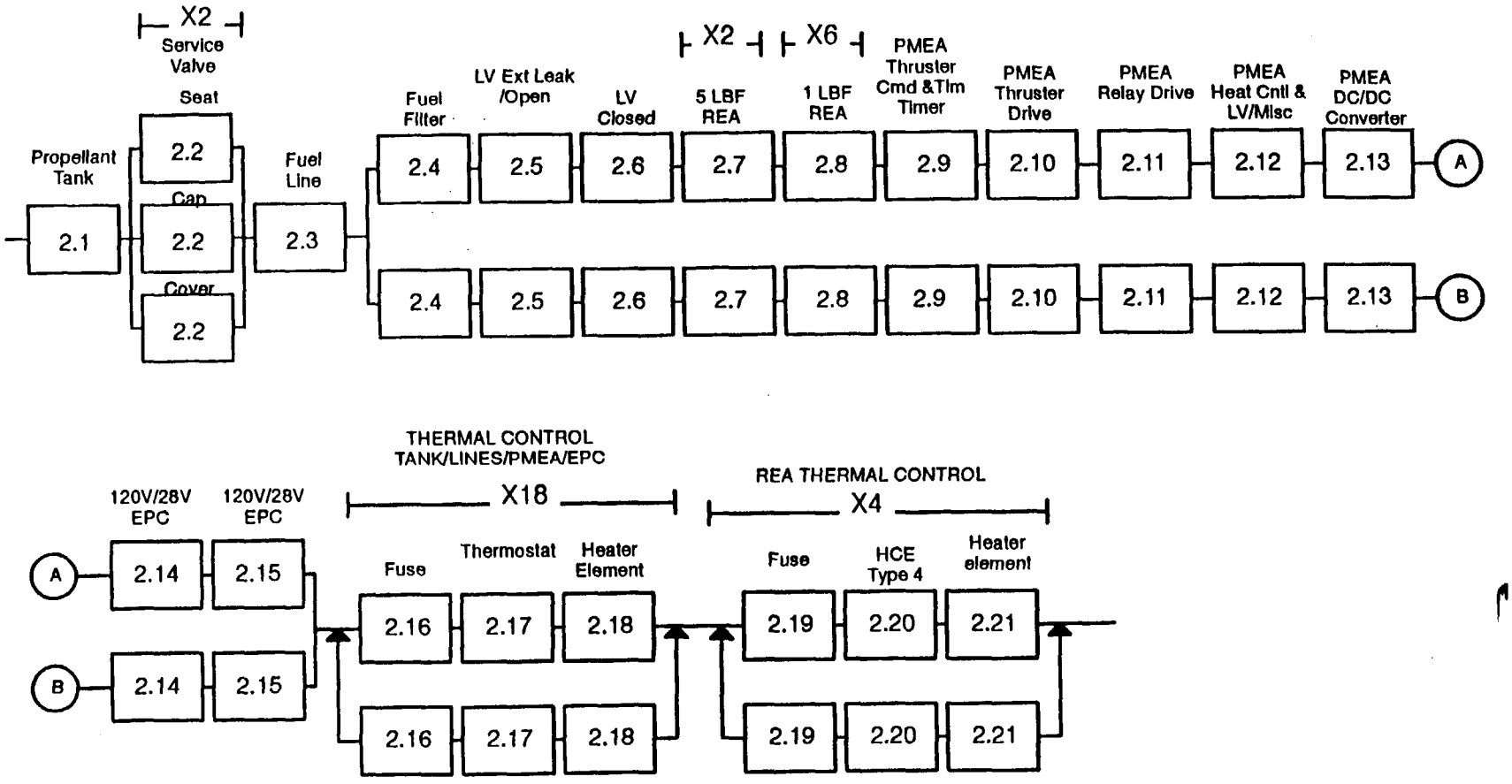

Figure 9. Propulsion Subsystem Reliability Block Diagram

The following component failure rates are not accounted for in MIL–HDBK–217. The failure rates were either taken from previous Martin Marietta Astro Space (Astro Space) programs or were based on engineering judgement from past experiences. The source of the failure rates for the components not included in MIL–HDBK–217 are shown below:

a. **Propellant tank**: Failure rate = 25.2 FITs. The failure rate for the propellant tank was based on the number of inches of weld. From previous programs, the failure rate for a weld was 0.6 FITs per inch. The propellant tank has a circumference of 42 inches. There is a total of 42 inches of welds. Therefore: 42 inches x 0.6 FITs/inch = 25.2 FITs.

b. **Service valve seat**: Failure rate = 50 FITs. This failure rate was used on a previous program.

c. **Fuel lines**: Failure rate = 50 FITs. This failure rate was used on a previous program.

d. **Fuel filters**: Failure rate = 24 FITs. This failure rate was used on a previous program.

e. **Latch valve, external leakage**: Failure rate = 49.665 failures per 10^9 operations. This failure rate was used on a previous program. The failure rate for the latch valve is based on the number of operations. For this reliability estimate, 1000 cycles were assumed.

f. **Latch valve, closed**: Failure rate = 13.225 failure per 10^9 operations. This failure rate was used on a previous program. The failure rate for the latch valve is based on the number of operations. For this reliability estimate, 1000 cycles were assumed.

g. **Rocket Engine Assembly**: Failure rate = 120 FITs: This failure rate is based on engineering judgement from experience with other programs. A failure rate of 120 FITs gives a calculated reliability of Ps = 0.995 for a 5 year mission. This Ps estimate is in line with REAs which are used on other programs. A subcontractor reliability assessment will be performed for the EOS mission and the results will be incorporated into the Propulsion Module reliability assessment.

h. **Heater element**: Failure rate = 5 FITs. This failure rate was used on a previous program.

The PMEA failure rates reflect the PMEA PDR design.

5.2.6 Updates to the Reliability Assessment

The following significant changes have been made to the previous Spacecraft Bus, subsystem and individual component PDR reliability assessments:

a. The quantity of 5 lbf REAs has been reduced from eight to four.

5.2.7 Probability of Success (Ps) Summary

The calculated PROPS Ps for the launch/ascent mission phase is Ps = 1.000000 for 0.5 hours.

The calculated PROPS Ps for the pre–operational mission phase is Ps = 0.999999 for 120.5 hours.

The calculated PROPS Ps for the operational mission phase is Ps = 0.990089 for 5 years.

5.2.8 Failure Rate Details

Table IX shows the propulsion subsystem operational mission phase reliability summary

Table IX. Propulsion Subsystem Reliability Summary

5 YEARS MISSION DURATION

7/16/93 PROPULSION SUBSYSTEM SPACE

BLOCK	DESCRIPTION	DUTY CYCLE	FAIL RATE (FITS)	BOX RLBLTY	STDBY ACTIVE	INTRMDT Ps	INTRMDT Ps	FINAL Ps
2.1	PROPELLANT TANK	100.0%	25.2	.9988962	X1		.9988962	
2.2	SERVICE VAL SEAT/CAP/COVE	100.0%	50	.9978111	3/1 A X2	1.000000	1.000000	
2.3	FUEL LINES	100.0%	50	.9978111			.9978111	
	SUB-TOTAL							.9967098
2.4	FUEL FILTER	100.0%	24	.9989488				
2.5	LV EXT LEAK/OPEN		49.665	.9999503				
2.6	LV FAILED CLOSED		13.225	.9999868				
2.7	5.0 lbf REA	100.0%	120	.9947548	X2	.9895371		
2.8	1.0 lbf REA	100.0%	120	.9947548	X6	.9689386		
	SUB-TOTAL FILTER/LV/REAS						.9577326	
2.9	PMEA THRUSTER CMD/TLM/TIM	20.0%	1140.6	.9861012				
2.10	PMEA THRUST DRIVE	1.0%	314.9	.9984969				
2.11	PMEA RELAY DRIVE	20.0%	661.4	.9919168				
2.12	PMEA HEATER CONTROL	1.0%	207.9	.9990074				
2.12	PMEA LV & MISC	1.0%	167.1	.9992021				
2.13	PMEA DC/DC CONVERTER	20.0%	173.3	.9978757				
	SUB-TOTAL PRIMARY PMEA						.9728411	
2.9	PMEA THRUSTER CMD/TLM/TIM	20.0%	114.06	.9986013				
2.10	PMEA THRUST DRIVE	1.0%	31.49	.9998496				
2.11	PMEA RELAY DRIVE	20.0%	66.14	.9991887				
2.12	PMEA HEATER CONTROL	1.0%	20.79	.9999007				
2.12	PMEA LV & MISC	1.0%	16.71	.9999202				
2.13	PMEA DC/DC CONVERTER	20.0%	17.33	.9997874				
	SUB-TOTAL BACK-UP PMEA						.9972503	
2.14	120V/28V PRIMARY EPC 1	100.0%	419	.9818049				
2.15	120V/28V PRIMARY EPC 2	100.0%	419	.9818049				
2.14	120V/28V BACK-UP EPC 1	100.0%	419	.9818049				
2.15	120V/28V BACK-UP EPC 2	100.0%	41.9	.9981654				
	SUB-TOTAL PRI HALF SYSTEM			.8981245				
	SUB-TOTAL B/U HALF SYSTEM			.9360007				
	SUB-TOTAL HALF SYSTEM			.9934800				.9934800
	THERM CONTROL							
2.16	TANK HEATER FUSE	100.0%	9	.9996057				
2.17	TANK HEATER THERMOSTAT	100.0%	.525	.9999770				
2.18	TANK HEATER ELEMENT	100.0%	5	.9997809				
	SUB-TOTAL THERM CONTROL			.9993636	2/1 A X18		.9999996	.9999927
	REA THERM CONTROL							
2.19	REA HEATER FUSE	100.0%	9	.9996057				
2.20	REA HEATER HCE TYPE 4	100.0%	109	.9952345				
2.21	REA HEATER ELEMENT	100.0%	5	.9997809				
	SUB-TOTAL REA THERM CONTR			.9946240	2/1 A X4		.9999711	.9998844
						PROP SS TOTAL		.9900896

5.3 Command and Data Handling Subsystem (C&DHS) Reliability Assessment

5.3.1 Description

The command and data handling subsystem (C&DHS) provides onboard computing resources to accomplish Spacecraft control and digital communications in support of inter-module, intra-subsystem, and inter-subsystem data traffic. It is responsible for the baseband handling of all uplinked command data transfers received from the communication subsystem (COMMS) and for coordinating the telemetering of all Spacecraft and Instrument-generated data to be downlinked through the COMMS or hard–lines.

There are a number of services the C&DHS provides to subsystem components and Instruments to accomplish control and communications. These services include:

a. Distribution of realtime and stored commands generated on the ground or by the onboard software.

b. The periodic collection of Spacecraft Bus telemetry and Instrument housekeeping telemetry and the formatting of these data for transmission to the ground and the onboard software.

c. The gathering, formatting, multiplexing, and recording of multiple streams of packetized Instrument Science Data.

d. The generation and distribution of the synchronization service, standard time service, and precise time service

e. The onboard communication of digital data between and among the distributed hardware and software components of Spacecraft subsystems and between Spacecraft subsystems and Instruments.

f. Providing the processing and software resources required for the execution and storage of the programs and data belonging to the onboard subsystems.

g. The input and output of data from/to subsystem sensors/effectors and Instruments, including appropriate signal conditioning and conversion of signals between the analog and digital domains.

h. Accepting the SCC–based Flight Software Subsystem prepared and formatted ancillary data message, then replicating and delivering the ancillary data message to the onboard Instruments and transmitting it to the ground for ground system use.

The major components of the C&DH subsystem and their primary function are listed in Table X. Control of most Spacecraft functions is provided by redundant Spacecraft Controls Computers (SCCs) that are part of the C&DH subsystem. The SCCs are nominally configured as one active and the other as cold–standby. However, the Spacecraft can operate with both SCCs powered–on for diagnostic operations. The command/telemetry interface unit (CTIU) provides the communication interface for uplinked commands and the housekeeping telemetry. The command and telemetry bus

(C&T bus), which is the onboard communication link between the CTIUs, BDUs, and instruments, is a redundant serial data bus. The SCCs utilize the controlling CTIU for Spacecraft command distribution and receives C&T bus data gathered by the CTIU. On each bus, one CTIU (active) acts as the bus controller (BC), the other CTIU (hot standby) acts as a remote terminal, and all other nodes are configured as remote terminals (RTs). The bus data units (BDUs), residing near Instruments and within housekeeping equipment modules, provide the monitoring and control services to their associated instruments or Spacecraft components. Standardized input/output (I/O) circuit modules interface the BDUs to sensors, effecters, and other units.

Dedicated point–to–point data links carry high–rate instrument data to the Science Formatting Equipment (SFE). The SFE generates formatted science data for the realtime links and for storage within the Solid State Recorder (SSR). The SFE routes the data to the appropriate destination. A separate bus, the low–rate science bus, handles low–rate instrument data. The SFE is the BC on the low–rate science bus while the Instruments and the CTIUs are RTs.

Table X. C&DHS Major Components

Subsystem Component	Qty	Major Function
Spacecraft Controls Computer (SCC)	2	FSWS software processing resource, only one powered
Command and Telemetry Interface Unit (CTIU)	2	Central component for Spacecraft commanding and telemetry generation, only one active
Bus Data Unit (BDU)- Housekeeping	6	Interface to housekeeping equipment for command distribution and telemetry gathering from/to the CTIU
Bus Data Unit (BDU)- Propulsion	1	Interface to Propulsion Module for command distribution and telemetry gathering from/to the CTIU
Bus Data Unit (BDU)- Instrument	3	Provides point-to-point interfaces for critical and configuration type commands and telemetry
Science Formatting Equipment (SFE)	1	Receives, multiplexes, formats, and routes science and housekeeping packets
Solid State Recorder (SSR)	2 DCU 2 DMU	Storage of housekeeping data for anomaly resolution Storage of formatted frames prior to playback to SFE

5.3.2 Functional Block Diagram

The C&DH subsystem is distributed throughout the EOS–AM Spacecraft with interfaces to all other subsystems and to the Instruments. The functional block diagram of the C&DH subsystem components showing how they are distributed about the Spacecraft is shown in Figure 10.

5.3.3 Reliability Block Diagram

The C&DH subsystem reliability block diagram is shown in Figure 11.

The Housekeeping BDU reliability block diagram is shown in Figure 12.

The Instrument BDU reliability block diagram is shown in Figure 13.

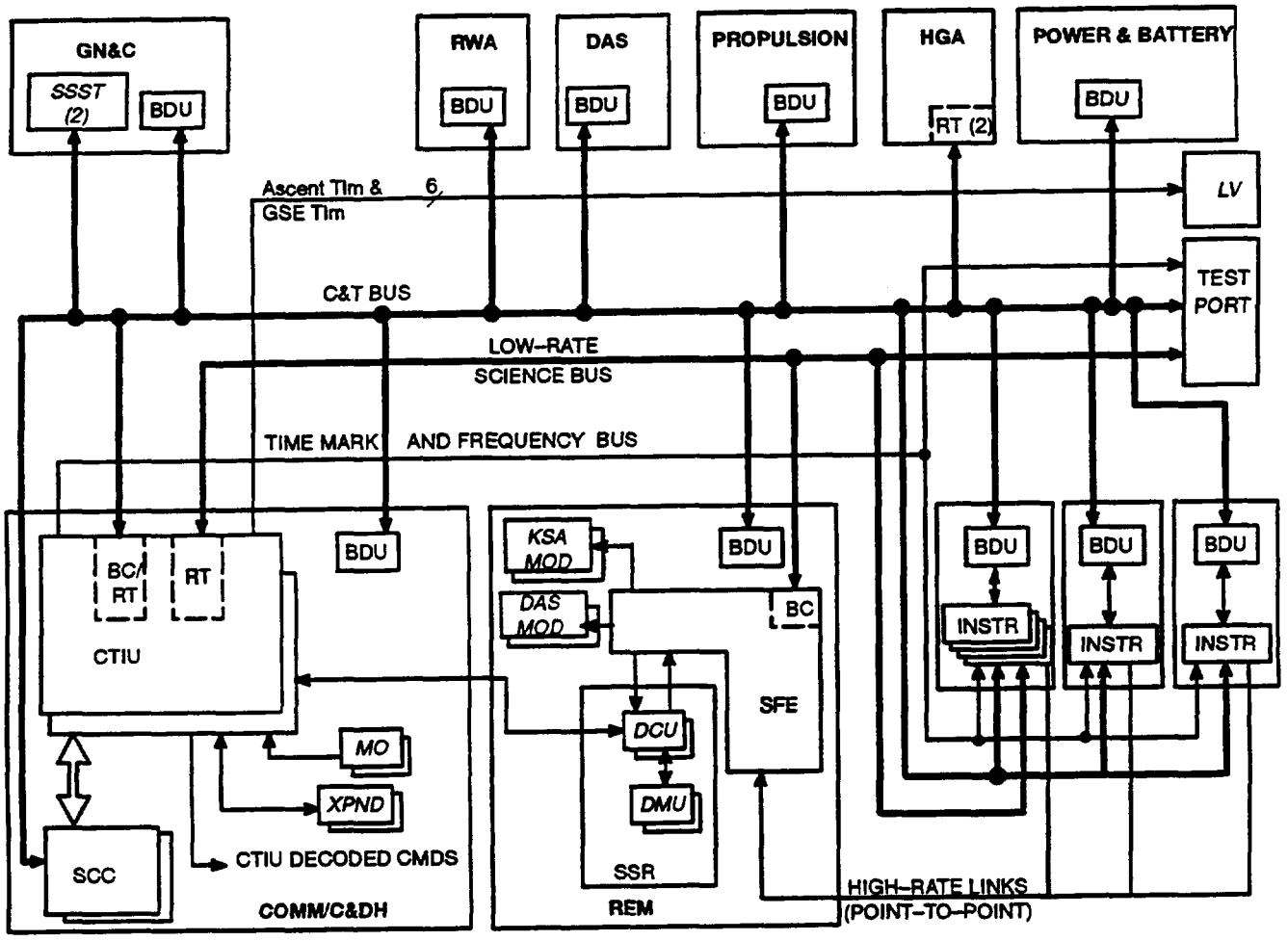

LEGEND

BC	= MIL-STD-1553B Bus Controller	*MO*	= Master Oscillator
BDU	= Bus Data Unit	*MOD*	= Modulator
C&T	= Command & Telemetry	*KSA*	= Ku-band Single Process
CTIU	= Command and Telemetry Interface Unit	REM	= Recorder Equipment Module
DAS	= Direct Access System (Comm)	RT	= MIL-STD-1553B Remote Terminal
DCU	= Data Control Unit	RWA	= Reaction Wheel Assembly
DMU	= Data Memory Unit	SCC	= Spacecraft Controls Computer
GN&C	= Guidance Navigation and Control	SFE	= Science Formatting Equipment
GSE	= *Ground Support Equipment*	SSR	= Solid State Recorder
HGA	= High Gain Antenna	SSST	= Solid State Star Tracker
H/K	= Housekeeping	TLM	= Telemetry
INSTR	= Instrument	*XPND*	= S-band Transponder
LV	= Launch Vehicle		

NOTE: All busses are redundant
Italics : Non-C&DHS Equipment
BOLD : Equipment Module

MIL-STD-1553B BUS

Indicates number of components

Figure 10. Command and Data Handling Subsystem Block Diagram

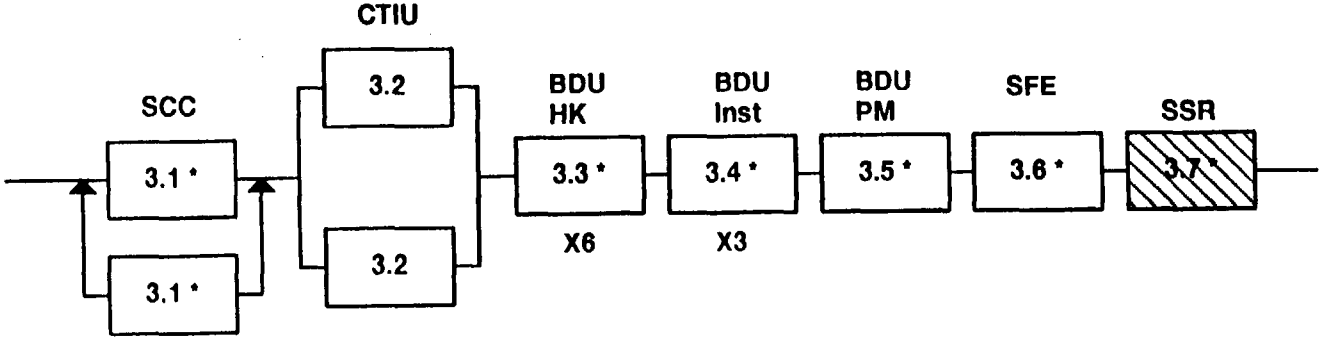

Note: * = Includes lowel level redundancy

: Not required for the pre–operational mission phase

Figure 11. C&DHS Subsystem Reliability Block Diagram

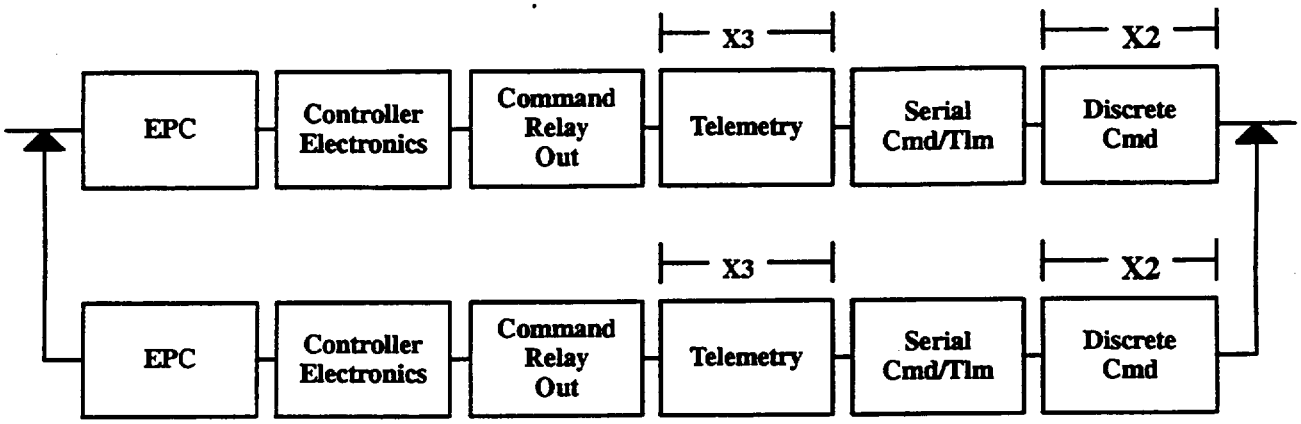

Figure 12. Housekeeping BDU Reliability Block Diagram

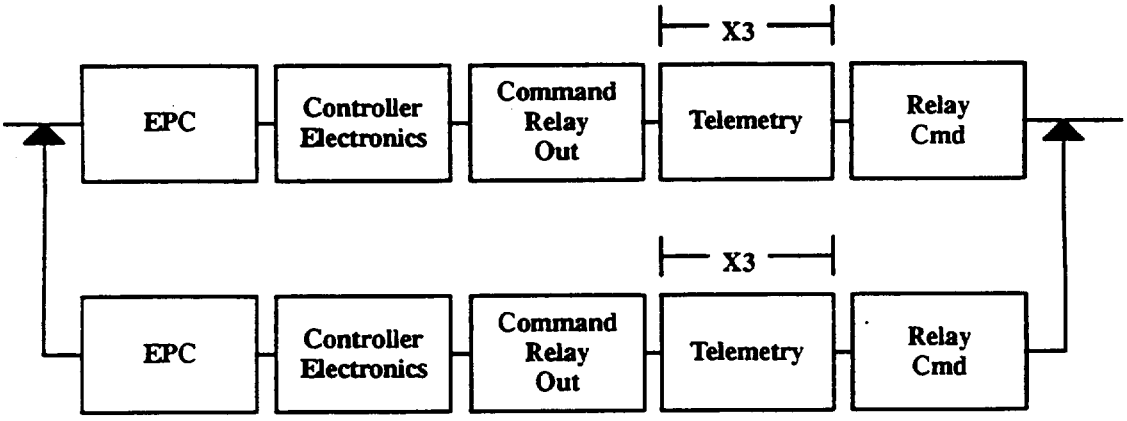

Figure 13. Instrument BDU Reliability Block diagram

The Propulsion Module BDU reliability block diagram is shown in Figure 14.

5.3.4 Equipment Redundancy

The SCC is in a 2 for 1 standby redundant configuration. The CTIU is in a 2 for 1 active configuration. The BDUs are internally standby redundant. The SFE and the SSB are internally redundant.

In the current design the CTIU is providing power to the master oscillator in the communications subsystem. The loss of one CTIU will result in the loss of the corresponding master oscillator. The current reliability model is slightly optimistic in that it does not reflect this specific configuration. The overall impact to the Spacecraft reliability should be minor. During the detailed design phase a detailed reliability model will be developed to account for the CTIU/master oscillator dedicated connection.

5.3.5 Equipment Failure Rates

The SCC failure rate is based on the subcontractor's (Honeywell) PDR reliability assessment. The SCC reliability estimate is Ps = 0.9406 for 5 years.

The CTIU failure rate was calculated in accordance with the requirements of MIL–HDBK–217 and reflects the PDR design.. The CTIU Computer Assembly (CTCA) failure rate was based on a reliability allocation of 0.96 for 5 years.

The BDU failure rate was calculated in accordance with the requirements of MIL–HDBK–217 and reflects the PDR design. All telemetry functions were considered critical in the reliability assessment. There is a possibility the majority of the telemetry functions can be considered non–critical to the overall mission operations. This should help improve the overall BDU and C&DH subsystem reliability estimates.

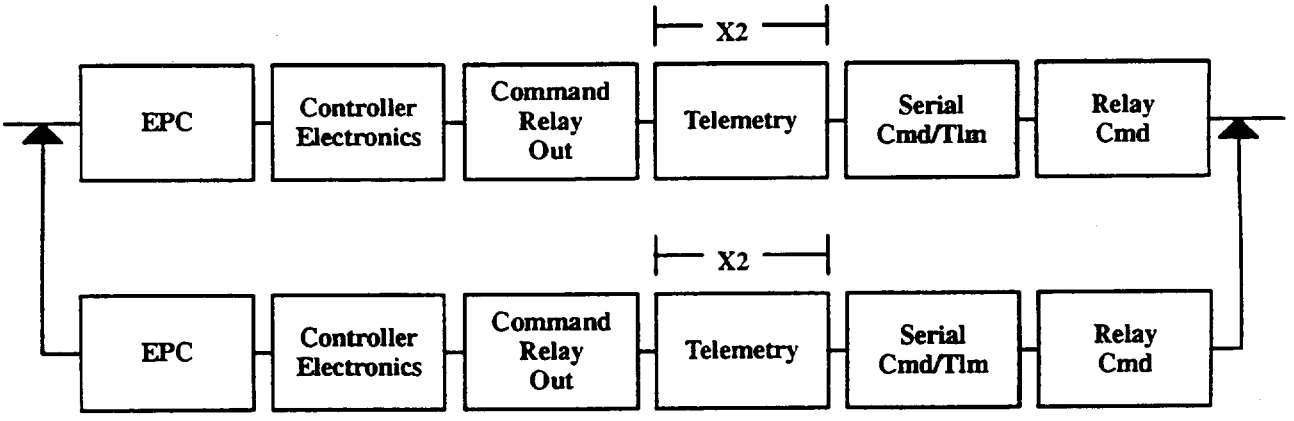

Figure 14. Propulsion Module BDU Reliability Block Diagram

The SFE failure rate is based on the SFE reliability allocation of 0.95 for 5 years. The SFE subcontractor (Fairchild) has performed a preliminary estimate using Grade 2 parts and state they can meet the 0.95 reliability allocation requirement.

The SSR reliability allocation is based on the previous High Rate Tape Recorder (HRTR) reliability estimate of 0.92 for 5 years. This reliability allocation is conservative for the SSR. The SSR by design should be more reliable than the HRTR. The SSR will not have the moving components like the HRTR did and will have sufficient internal redundancy to ensure reliable operation. The SSR will consist of two identical, redundant Data Controller Units (DCUs), from one to five identical Data Memory Units (DMUs) and necessary interconnecting cables.

5.3.6 Updates to the Reliability Assessment

The following significant changes have been made to the previous Spacecraft Bus, subsystem and individual component PDR reliability assessments:

a. The CTIU is no longer internally redundant.

b. The quantity of BDUs have been reduced from 15 to 10.

c. The internal BDU 1553 interface and the user interfaces are no longer cross–strapped. The BDU is external I/O redundancy.

d. The SSB and HRTR have been replaced with the SSR.

5.3.7 Probability of Success (Ps) Summary

The calculated C&DHS Ps for the launch/ascent mission phase is Ps = 0.999999 for 0.5 hours.

The calculated C&DHS Ps for the pre–operational mission phase is Ps = 0.999998 for 120.5 hours.

The calculated C&DHS Ps for the operational mission phase is Ps = 0.820121 for 5 years.

5.3.8 Failure Rate Details

Table XI shows the C&DHS operational mission phase reliability summary.

Table XII shows the CTIU operational mission phase reliability summary.

Table XIII shows the Housekeeping BDU operational mission phase reliability summary.

Table XIV shows the Instrument BDU operational mission phase reliability summary.

Table XV shows the Propulsion Module BDU operational mission phase reliability summary.

Table XI. C&DH Subsystem Reliability Summary

5 YEARS MISSION DURATION

7/16/93 C&DH SUBSYSTEM SPACECRAFT PDR
OPERATIONAL MISSION PHASE

BLOCK	DESCRIPTION	NOTES	DUTY CYCLE	FAIL RATE (FITS)	BOX RLBLTY	STDBY ACTIVE	INTRMDT Ps	FINAL Ps
3.1	SCC	SUB PDR CALC		*	.9406	2/1S		.9980238
3.2	CTIU	BOX PDR CALC		*	.8567309	2/1A		.9794740
3.3	BDU-HOUSEKEEPING	BOX PDR CALC		*	.9093290	2/1 S X6	.9953497	.9724208
3.4	BDU-INSTRUMENT	BOX PDR CALC		*	.9247840	2/1 S X3	.9968156	.9904771
3.5	BDU-PROP MOD	BOX PDR CALC		*	.9226506	2/1S X1	.9966301	.9966301
3.6	SFE	SUB EST/ALLOC		*				.95
3.7	SSR	ALLOCATION		*				.92
						C & DH SUBSYSTEM		.8201209

Table XII. CTIU Reliability Summary

BLOCK	DESCRIPTION	NOTES	DUTY CYCLE	FAIL RATE (FITS)	BOX RLBLTY	STDBY ACTIVE	INTRMDT Ps	FINAL Ps
	DOWNLINK ENCODER LOGIC BD		100.0%	539.04	.9766534			.9766534
	DOWNLINK ROUTER BD		100.0%	658.4	.9715579			.9715579
	IOIC REG & FAULT CNTL BD		100.0%	118.89	.9948032			.9948032
	RELAY COMMAND BD		1.0%	530.7	.9974681			.9974681
	96K X 16 PROM BD		1.0%	469.73	.9977587			.9977587
	CTCA	ALLOCATION	100.0%	931.4	.9600033			.9600033
	TIME MARK & FREQ BD		100.0%	488.79	.9788066			.9788066
	UPLINK DECODER BD		100.0%	307.25	.9866250			.9866250
	PULSE SHAPER BD		1.0%	36.48	.9998258			.9998258
	EPC		100.0%	371.59	.9838470			.9838470
						SINGLE CTIU		.8567309

Table XIII. Housekeeping BDU Reliability Summary

BLOCK	DESCRIPTION	NOTES	DUTY CYCLE	FAIL RATE (FITS)	BOX RLBLTY	STDBY ACTIVE	INTRMDT Ps	5 yr Ps
3.3.1	EPC		100.0%	419	.9818049			
3.3.2	CONTROLLER ELECTRONICS		100.0%	368.2	.9839931			
3.3.3	TELEMETRY BOARD ASSY	1/2 BOARD	100.0%	294.7	.9871678	X3	.9619953	
3.3.4	SERIAL COMMAND/TLM BD	1/2 BOARD	100.0%	347.4	.9848905	X1		
3.3.5	DISCRETE COMMAND BD	1/2 BOARD	1.0%	653.5	.9968831	X2	.9937760	
3.3.6	COMMAND RELAY OUTPUT		1.0%	70.2	.9996647			
	SUB-TOTAL BDU				.9093290	2/1 SB		.9953497
						ONE HOUSEKEEPING BDU		.9953497

Table XIV. Instrument BDU Reliability Summary

BLOCK	DESCRIPTION	NOTES	DUTY CYCLE	FAIL RATE (FITS)	BOX RLBLTY	STDBY ACTIVE	INTRMDT Ps	5 yr Ps
3.4.1	EPC		100.0%	419	.9818049			
3.4.2	CONTROLLER ELECTRONICS		100.0%	368.2	.9839931			
3.4.3	TELEMETRY BOARD ASSY	1/2 BOARD	100.0%	294.7	.9871678	X3	.9619953	
3.4.4	RELAY COMMAND BD	1/2 BOARD	1.0%	966.1	.9953956	X1		
3.4.5	COMMAND RELAY OUTPUT		1.0%	70.2	.9996647			
	SUB-TOTAL BDU				.9247840	2/1 SB		.9968156
							ONE INSTRUMENT BDU	.9968156

Table XV. Propulsion Module BDU Reliability Summary

BLOCK	DESCRIPTION	NOTES	DUTY CYCLE	FAIL RATE (FITS)	BOX RLBLTY	STDBY ACTIVE	INTRMDT Ps	5 yr Ps
3.5.1	EPC		100.0%	419	.9818049			
3.5.2	CONTROLLER ELECTRONICS		100.0%	368.2	.9839931			
3.5.3	TELEMETRY BOARD ASSY	1/2 BOARD	100.0%	294.7	.9871678	X2	.9745003	
3.5.4	SERIAL COMMAND/TLM BD	1/2 BOARD	100.0%	347.4	.9848905	X1		
3.5.6	RELAY COMMAND BD	1/2 BOARD	1.0%	966.1	.9953956	X1		
3.5.7	COMMAND RELAY OUTPUT		1.0%	70.2	.9996647			
	SUB-TOTAL BDU				.9226506	2/1 SB		.9966301
							ONE PROP MOD BDU	.9966301

5.4 Communications Subsystem (COMMS) Reliability Assessment

5.4.1 Description

5.4.1.1 Communications Links and Link Parameters

Communications subsystem links between the EOS Spacecraft and external elements are shown in Figure 15. The links satisfy the functional requirements for high–rate science data downlink, Spacecraft engineering data downlink, command and control uplink, and navigation support.

The communication links utilize several services of the TDRSS:

a. KSA return service for science data downlink,

b. SSA and SMA return service for engineering downlink,

c. SSA and SMA forward service for commands and

d. SSA and SMA forward service for autonomous navigation.

In addition, the communications subsystem supports a direct to user science data downlink, direct access services (DAS), and a ground network (GN) link can be established to support emergency operations.

5.4.1.2 Communications Services

The communications subsystem supports the EOS Spacecraft housekeeping functions by providing command reception, telemetry transmission and navigation services. Transmission of telemetry and reception of commands will be primarily supported through the Tracking and Data Relay Satellite

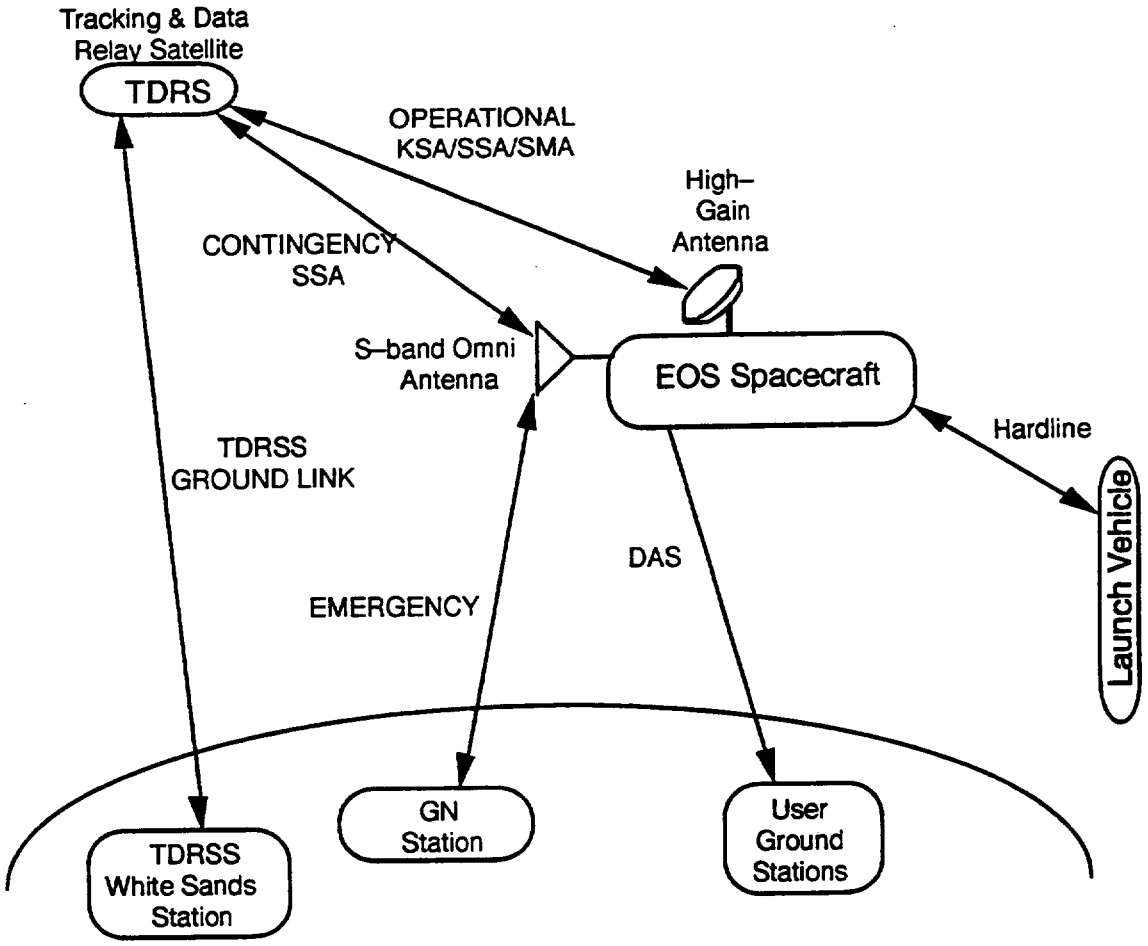

Figure 15. Communications Subsystem: Links

System (TDRSS). If the TDRSS becomes unavailable, backup command and telemetry functions will be accommodated through the use of the GN. Primary navigation functions will be supported via the use of the TDRSS onboard navigation system (TONS). Should TONS support become unavailable, then the TDRSS based S–band tracking support function will be utilized as the backup navigation source. Direct downlink services will also be included which will provide direct to user science data and also act as a backup to the TDRSS science data return link function. The communications subsystem will support an interface for command functions through the launch vehicle umbilical for prelaunch checkout.

To accommodate the above objectives, the communications subsystem will include Ku–band, X–band and S–band equipment.

The Ku–band equipment will provide the following functions:

a. Modulate and transmit one single 150 Mbps data channel via the TDRSS KSA telemetry Return link.

b. Provide open loop pointing of the HGA in response to commands from the C&DH subsystem.

The S–band equipment will provide the following functions:

a. Receive and demodulate the SSA and SMA Forward link signals transmitted by the TDRSS including the ranging channel.

b. Provide for S–band two way turn–around ranging as well as one way Doppler tracking functions compatible with the TDRSS.

c. Modulate and transmit baseband telemetry data on the TDRSS SSA and SMA Return links.

d. Receive and demodulate the GN command uplink signals excluding the ranging channel.

e. Modulate and transmit baseband telemetry data on the GN telemetry downlink.

f. Perform Doppler extraction on the TDRSS forward link and time tag the data for processing by the C&DH subsystem.

g. Detect the PN code epoch on the TDRSS forward link and time tag the event for Spacecraft clock calibration processing by the C&DH subsystem.

5.4.2 Functional Block Diagram

The communications subsystem functional block diagram is shown in Figure 16.

5.4.3 Reliability Block Diagram

The communications subsystem reliability block diagram is shown in Figure 17.

5.4.4 Equipment Redundancy

Ku–Band Equipment – The HGA antenna components; Ku–Band feeds, polarized, reflectors are shown as serial elements in the Ku–Band section of the subsystem model. The HGA gimbal components; gears, bearings etc. are also shown as serial elements in the Ku–Band model. The HGA upconverter, TWTA, antenna control electronics (ACE), motor windings and KSA modulator are shown in 2 for 1 redundancy. The failure of any component in the primary side will result in the failure of the primary side. The backup side would then be used for the remainder of the mission.

S–Band Equipment – The master oscillator is in 2 for 1 active redundancy. The S–Band transponder and the SBIU Omni/HGA select switch are in 2 for 1 active redundancy. The SBIU diplexer, SBIU coupler and one of the two omni antennas are in 2 for 1 standby redundancy. The two SBIU zenith/Nadir and HGA coax switches and the two 3db hybrids are serial elements.

DAS Equipment – The DAS modulator, upconverter and the SSPA are in 2 for 1 standby redundancy. The waveguide switch, filter assembly and the X–Band antenna are serial elements to the DAS equipment.

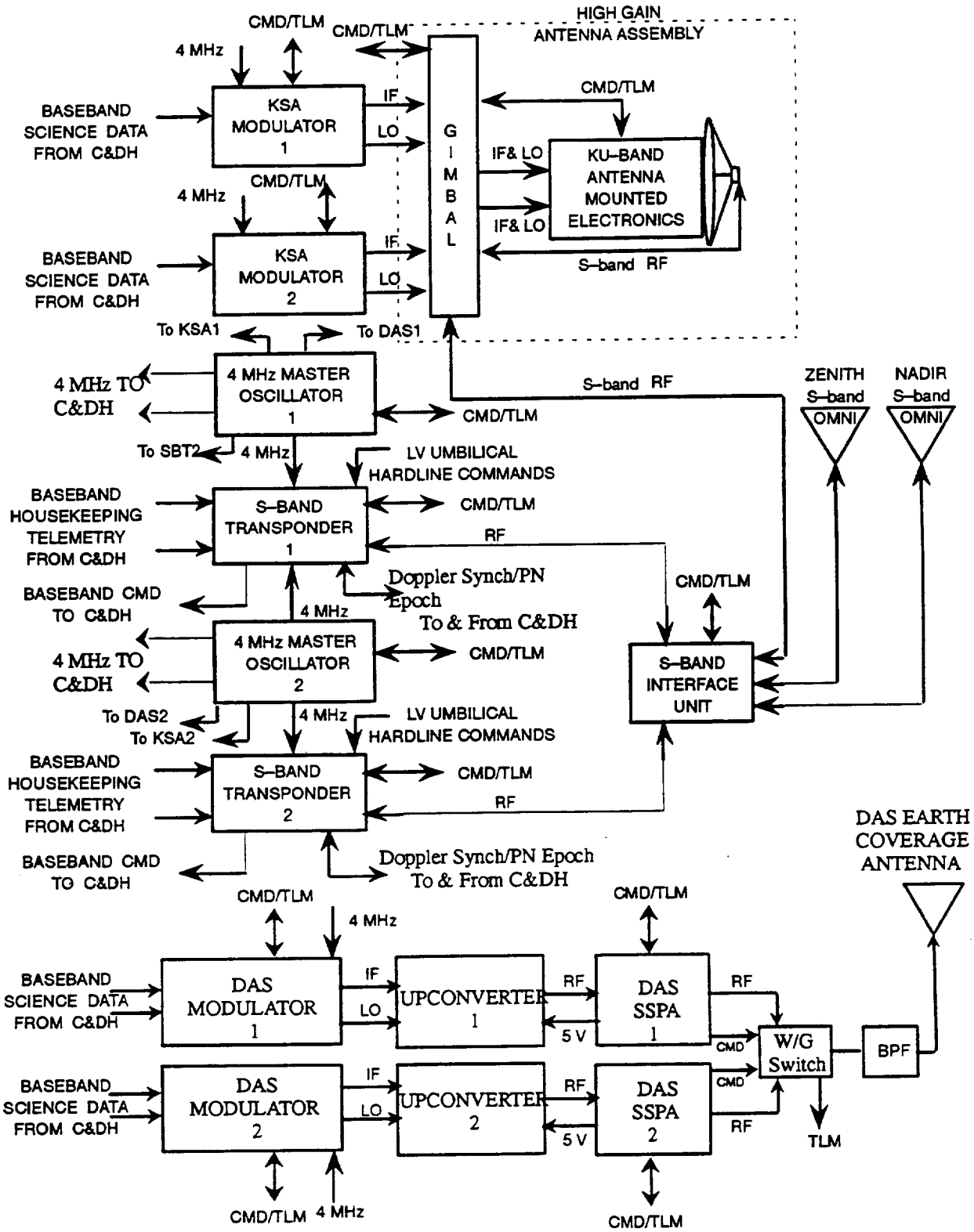

Figure 16. Communications Subsystem Functional Block Diagram

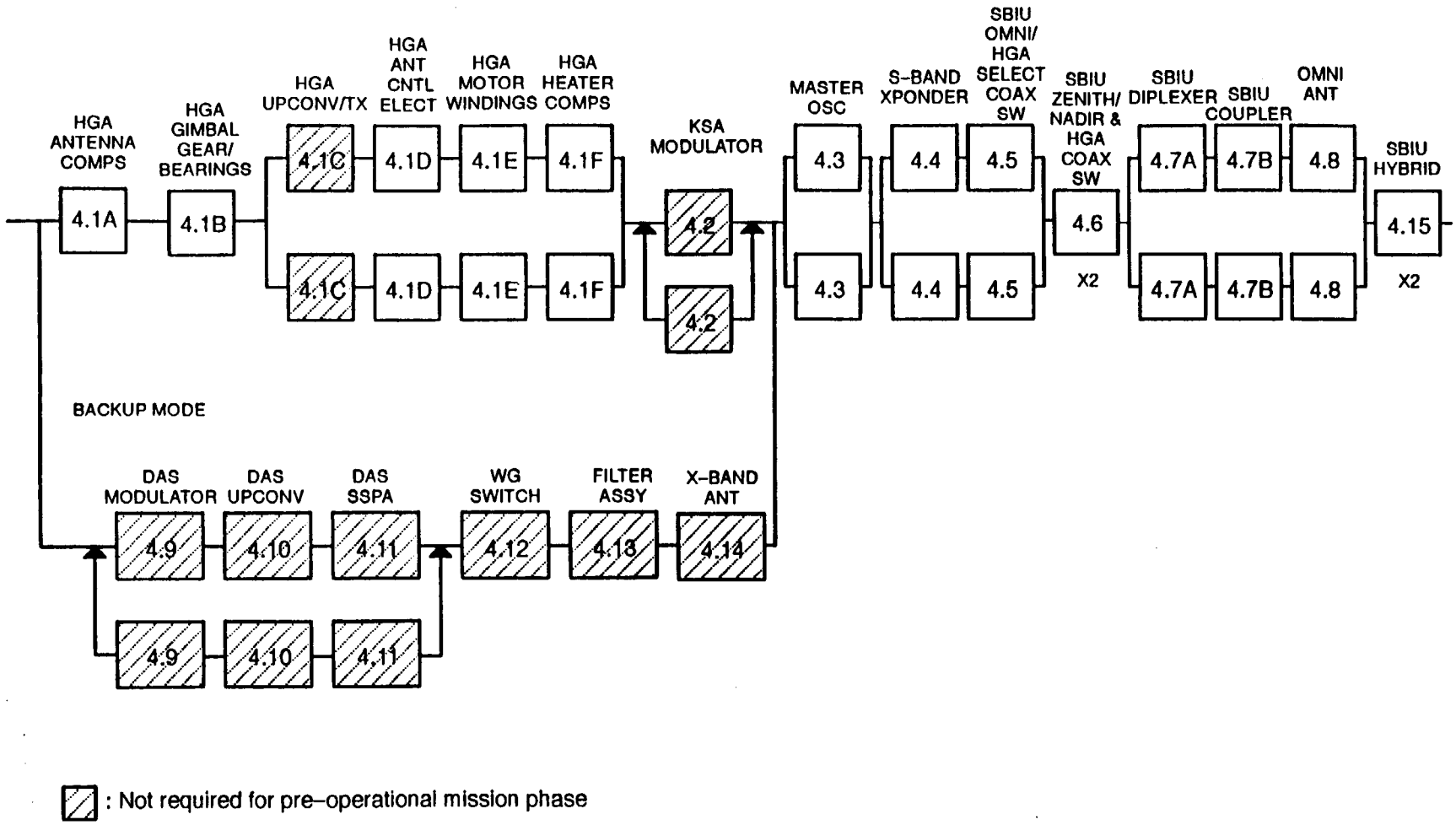

Figure 17. Communications Subsystem Reliability Block Diagram

In the communications subsystem reliability model the DAS equipment is considered as a complete backup for the Ku–Band equipment. If the Ku–Band system were to become inoperative, the DAS equipment could be used instead for the remainder of the mission. The data transmission rates would be lower and more ground contacts would be required, however all of the mission objectives could still be met.

5.4.5 Equipment Failure Rates

The HGA reliability allocation of Ps = 0.985 for 5 years was used in the COMMS reliability assessment. The HGA subcontractor (SPAR) has provided the HGA PDR reliability assessment. The PDR reliability assessment showed a calculated HGA reliability of 0.972 for 5 years which is below the reliability requirement. There are some questions as to the methodology used in the reliability assessment, so for the Spacecraft PDR the HGA reliability allocation is being used in the COMMS analysis.

The KSA modulator, DAS SSPA, DAS upconverter and the DAS modulator reflect the component PDR designs and were calculated in accordance with MIL–HDBK–217.

The S–band transponder subcontractor (Motorola) provided the PDR reliability assessment. The PDR reliability estimate of Ps = 0.8999 with a 100% duty cycle was below the transponders reliability allocation requirement of 0.9232 for 5 years. In actual mission operations, the receiver has a 100% duty cycle and the transmitter has a 20% duty cycle. For the COMMS analysis, the transponder PDR failure rates for the receiver and the transmitter were used along with the appropriate duty cycles for the actual mission operations.

The communications subsystem has some component failure rates which are not included in MIL–HDBK–217. Appendix II provides a summary of these components.

5.4.6 Updates to the Reliability Assessment

The following significant changes have been made to the previous Spacecraft Bus, subsystem and individual component PDR reliability assessments:

a. The KSA modulator is now being shown as cross–strapped with the HGA electronics.

5.4.7 Probability of Success (Ps) Summary

The calculated COMMS Ps for the launch/ascent mission phase is Ps = 0.999999 for 0.5 hours.

The calculated COMMS Ps for the pre–operational mission phase is Ps = 0.999894 for 120.5 hours.

The calculated COMMS Ps for the operational mission phase is Ps = 0.991634 for 5 years.

5.4.8 Failure Rate Details

Table XVI shows the COMMS reliability summary

Table XVI. Communications Subsystem Reliability Summary

5 YEARS MISSION DURATION

6/23/93 COMM SUBSYSTEM SPACECRAFT PDR
OPERATIONAL MISSION PHASE

BLOCK	DESCRIPTION	NOTES	DUTY CYCLE	FAIL RATE (FITS)	BOX RLBLTY	STDBY ACTIVE	INTRMDT Ps	FINAL Ps
4.1	HIGH GAIN ANTENNA	BOX PDR						
4.1A	ANTENNA COMPONENTS		100.0%	65.5	.9971336			
4.1B	GIMBAL BEARING/GEAR		100.0%	69	.9969806			
4.1C	UPCONVERTER/TWTA	ACTIVE	100.0%	988	.9576249			
4.1D	ACE (EC & MDA)	ACTIVE	100.0%	3221	.8683501			
4.1E	AZ/EL MOTOR WING/ENCODER	ACTIVE	100.0%	530	.9770404			
4.1F	HEATER COMPS	ACTIVE	40.0%	156.7	.9968460			
	SUB-TOTAL PRIMARY SIDE				.8098991			
4.1C	UPCONVERTER/TWTA	S/B	100.0%	98.8	.9956795			
4.1D	ACE (EC & MDA)	SB(BUCK REG ON)	100.0%	322.1	.9859831			
4.1E	AZ/EL MOTOR WING/ENCODER	S/B	100.0%	53	.9976800			
4.1F	HEATER COMPS	S/B		15.67	.9999313			
	SUB-TOTAL BACK-UP SIDE				.9793783			
	SUB-TOTAL HGA	ALLOCATION					.985	
4.2	KSA MODULATOR	BOX PDR	30.0%	3428	.9459308	2/1 SB	.9983653	
	SUB-TOTAL K-BAND							.9833898
4.3	MASTER OSCILLATOR	ESTIMATE	100.0%	922	.9603988	2/1 A		.9984317
	S-BAND XPONDER (RX)	BOX PDR	100.0%	1330	.9433789			
	S-BAND XPONDER (TX)	BOX PDR	20.0%	1076	.9868832			
4.4	SUB-TOTAL TRANSPONDER				.9310048			
4.5	SBIU OMNI/HGA SEL COAX SW		100.0%	10	.9995618			
	SUB-TOTAL				.9305969	2/1 A		.9951832
4.6	SBIU OMNI SEL & HGA SW		100.0%	10	.9995618	X2		.9991239
4.7A	SBIU DIPLEXER		100.0%	5	.9997809			
4.7B	SBIU COUPLER		100.0%	5	.9997809			
4.8	OMNI ANTENNA		100.0%	90	.9960635			
	SUB-TOTAL				.9956271	2/1 A		.9999809
4.15	3DB HYBRID		100.0%	7	.9996933	X2		.9993866
	COMM SUB W/O DAS							.9756447
	DAS							
4.9	MODULATOR	BOX PDR	100.0%	4194	.8321005			
4.10	UPCONVERTER	BOX PDR	100.0%	472.8	.9794927			
4.11	SSPA	BOX PDR	100.0%	626.4	.9729214			
	SUB-TOTAL				.7929664	2/1 SB	.9747972	
4.12	WG SWITCH		1.0%	52.3	.9997502			
4.13	FILTER ASSEMBLY		100.0%	10	.9995618			
4.14	X-BAND ANTENNA		100.0%	90	.9960635			
	SUB-TOTAL DAS							.9702920
	COMM SUB W DAS BACKUP							
	K-BAND EQUIPMENT	EQUIVALENT F/R		382.1942	.9833898			
	DAS EQUIPMENT	EQUIVALENT F/R		688.1507	.9702920			
	SUB-TOTAL K-BAND/DAS	2/1 UNEQUAL F/R				2/1UA	.9995065	
	REMAINDER SS				.9921241			
	COMM SUB W DAS BACKUP							.9916345

5.5 Guidance, Navigation & Control Subsystem (GN&CS) Reliability Assessment

5.5.1 Description

The GN&C subsystem provides for the determination and control of the EOS Spacecraft attitude, orbit, and appendage articulation. The subsystem must support a wide range of Spacecraft system operating modes, providing normal, and backup pointing modes. The subsystem must also support propulsive operations for orbit adjust and boost modes.

Thrusters are used to perform all slew maneuvers, including earth acquisition and reacquisition. Four reaction–wheel assemblies (RWAs) are used for primary attitude control. Three magnetic torque rods are used for momentum unloading. The pointing and navigation performance is predicated on parameters affecting atmospheric density being within the indicated limits.

The GN&C subsystem autonomously controls the Spacecraft attitude, and maintains a navigation state vector, which allows attitude knowledge to be provided to instruments. Attitude control and knowledge are referred to the instrument cubes. Attitude control errors and instrument positioning errors differentiate Pointing Accuracy from Pointing Knowledge.

The GN&C subsystem comprises sensors, actuators, an attitude control electronics (ACE), and software. Some components are linked by C&DHS hardware.

Primary sensing is provided by the star tracker for attitude and the inertial reference unit (IRU) for attitude rate. The three–axis magnetometer (TAM) senses the geomagnetic field. Backup attitude sensing is provided by the earth sensor assembly (ESA) for the roll and pitch axes, and by gyrocompassing for the yaw axis. The fine sun sensor (FSS) serves as a back–up sensor for attitude determination if one solid state star tracker (SSST) fails. Primary navigational inputs are from the TDRSS Onboard Navigation System (TONS) with standard TDRSS ground–based orbit determination as backup. TONS estimates EOS Spacecraft position, velocity, drag coefficient, and master oscillator frequency. TONS also supports onboard time maintenance and provides Doppler compensation predicts for the S–band transponder. TONS is dependent upon receiving adequate TDRSS scheduled services.

Primary attitude control is provided by the reaction wheel assemblies (RWAs), with momentum unloading by magnetic torque rods (MTRs). Thrusters within the (propulsion subsystem) provide for backup attitude control and/or momentum unloading, as well as for attitude slewing and velocity corrections.

Most GN&C algorithms are implemented by flight software resident in the C&DH Spacecraft controls computer (SCC). GN&C primary mode functions are accomplished by a fault–tolerant system which includes fault detection, isolation, and recovery (FDIR) capability, using functional and component redundancy. GN&C acquisition modes serve also as backup modes, and enable graceful transition to and from the primary modes, as necessary.

TONS navigation software resides in the SCC. Safe–mode control is implemented via the ACE. The ACE provides coarse attitude control of the EOS Spacecraft in the event of a major C&DH system problem.

The power switching unit (PSU) supplies 28V power to the GN&C subsystem equipment.

5.5.2 Functional Block Diagram

The GN&CS functional block diagram is shown in Figure 18.

5.5.3 Reliability Block Diagram

The GN&CS reliability block diagram is shown in Figure 19.

The ACE reliability block diagram is shown in Figure 20.

5.5.4 Equipment Redundancy

The reaction wheels and the ACE wheel driver circuits are in a 4 for 3 active redundancy configuration. The IRU gyro channels are in a 3 for 2 active redundancy configuration. The magnetic torquers, the ESA and the CSS are in 2 for 1 active redundancy, The SSST and the FSS are in 3 for 2 active redundancy. The magnetometer is in 2 for 1 standby redundancy. The ACE is internally redundant. The ACE first section is a series of 2 for 1 actively redundant functions. The second section is a series of functions in 2 for 1 standby redundancy.

The PSU is shown in 2 for 1 active redundancy. The PSU is comprised of a two EPCs, two relay boards and fuses. It is assumed for this analysis that the PSU will be completely cross–strapped with the GN&C equipment. If any of the GN&C equipment interfaces are not cross–strapped with the PSU, the GN&C subsystem reliability estimate will be slightly lower.

5.5.5 Equipment Failure Rates

All of the GN&C subsystem equipment with the exception of the ACE, is subcontracted equipment. Most of the subcontractors have not gone through their PDRs yet. For these subcontractors the reliability estimates are based on pre–PDR subcontractor supplied information. The following paragraphs described the failure rate sources which were used in the reliability assessment:

a. **Reaction Wheel Assembly** – The preliminary subcontractor reliability estimate of 0.97 (for 5 years) was used. The RWA performance specification reliability allocation is 0.95.

b. **Inertial Reference Unit** – The latest subcontractor reliability estimate of 0.9285 for each gyro channel was used. The IRU performance specification reliability allocation is 0.96. (Note: As of 7/16/93 the IRU downselection has not been made official. If a different subcontractor is selected, this reliability estimate will need to be revised.)

c. **Magnetic Torquers** – A reliability estimate of 0.9996 for each torquers was used.

d. **Coarse Sun Sensor** – The CSS model is a simplified reliability model accounting for the primary and backup functions at the subsystem level. A reliability estimate of 0.9978 for each redundant function was used.

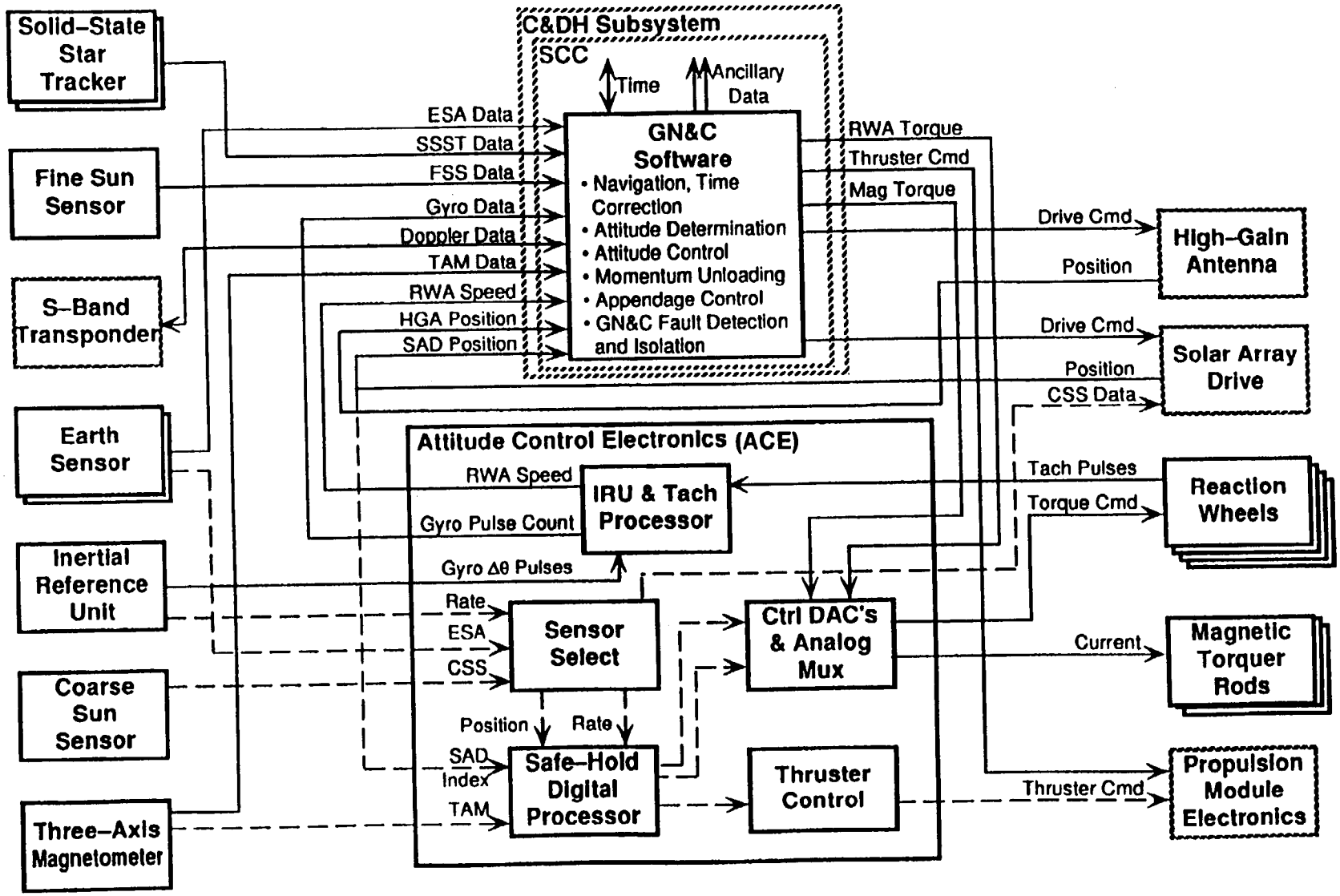

Note: Dashed boxes not part of GN&C subsystem.

Figure 18. GN&C Subsystem Functional Block Diagram

DCC072293

20008654
30 July 1993

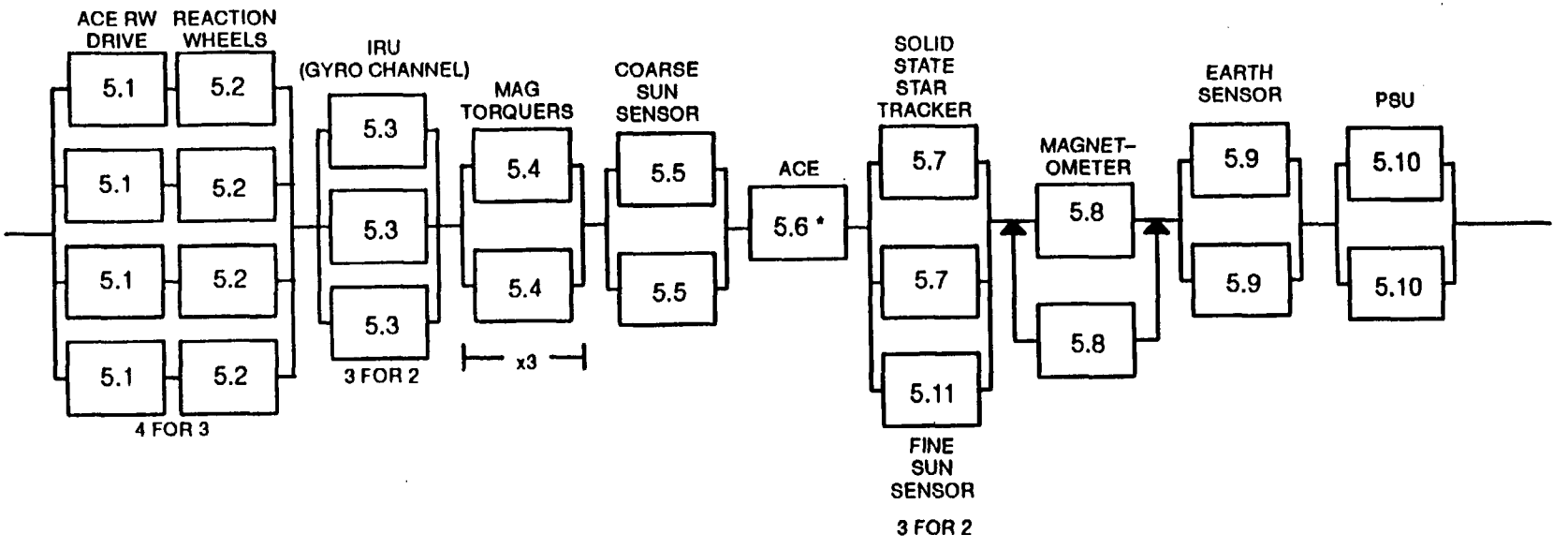

NOTE: * = LOWER LEVEL REDUNDANCY

Figure 19. GN&C Subsystem Reliability Block Diagram

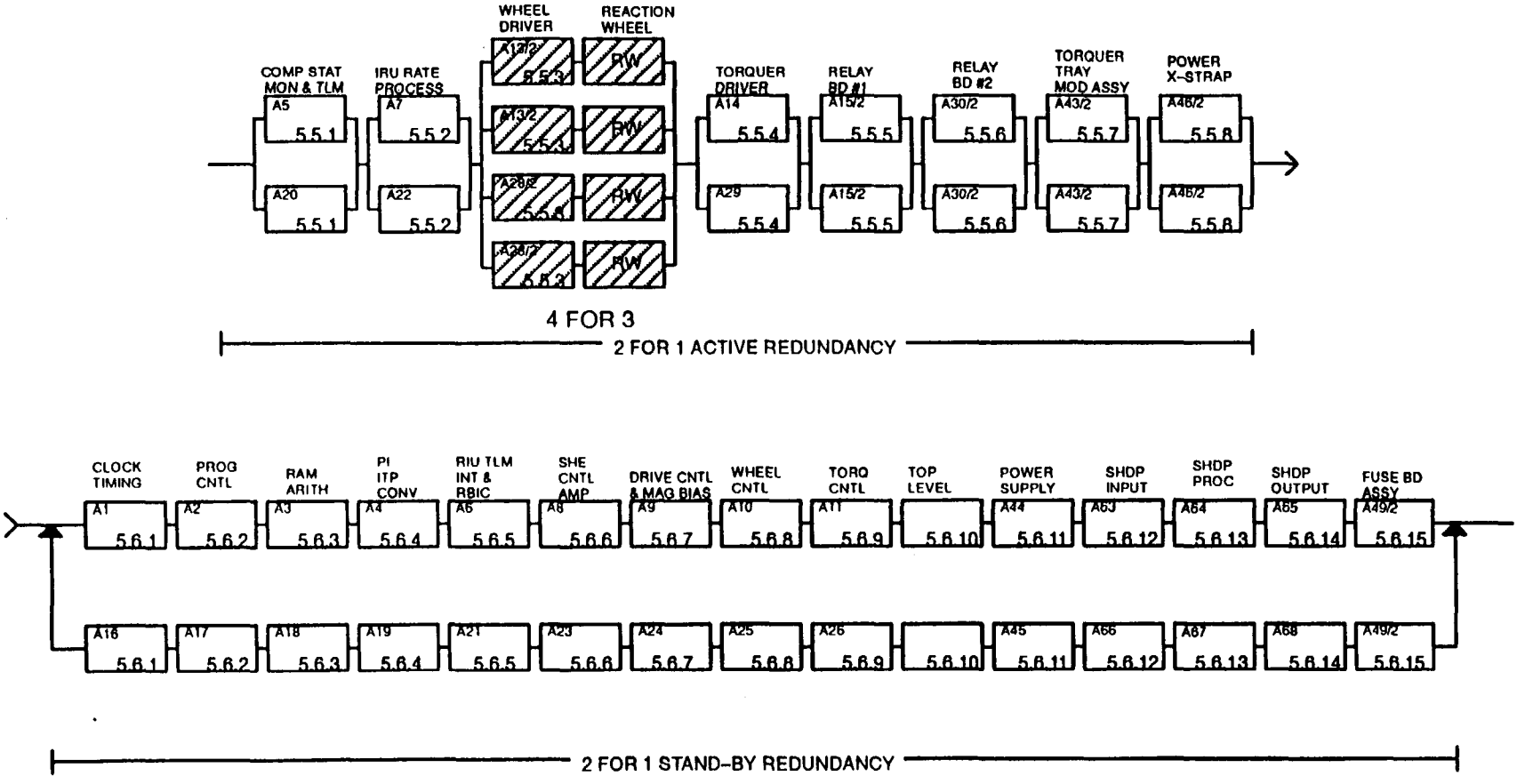

Note: ACE RW driver and the RW are included at the subsystem level

Figure 20. ACE Reliability Block Diagram

e. **Fine Sun Sensor** – The subcontractor reliability estimate of less than 500 FITs was used.

f. **Solid State Star Tracker** – The latest subcontractor reliability estimate of 0.94 was used.

g. **Three Axis Magnetometer** – The subcontractor estimate of 497 FITs was used.

h. **Earth Sensor Assembly** – A failure rate for an ESA from a previous program was used. The ESA failure rate is estimated to be 793 FITs.

i. **Attitude Control Electronics** – The ACE failure rate was based on MIL–HDBK–217 and reflects the PDR design. Both Grade 1 and Grade 2 parts are included in the ACE failure rate.

j. **Power Switching Unit** – The PSU failure rate was estimated based on the preliminary functional block diagram. The EPC failure rate was derived from the other EPC that are on the Spacecraft. The relay and fuse failure rates were derived from MIL–HDBK–217.

5.5.6 Updates to the Reliability Assessment

The following significant changes have been made to the previous Spacecraft Bus, subsystem and individual component PDR reliability assessments:

a. The PSU is now included in the GN&CS reliability assessment.

b. Made the downselection for the SSST.

c. Assumed the IRU subcontractor with the highest reliability was selected.

5.5.7 Probability of Success (Ps) Summary

The calculated GN&CS Ps for the launch/ascent mission phase is Ps = 0.999999 for 0.5 hours.

The calculated GN&CS Ps for the pre–operational mission phase is Ps = 0.999988 for 120.5 hours.

The calculated GN&CS Ps for the operational mission phase is Ps = 0.952007 for 5 years.

5.5.8 Failure Rate Details

Table XVII shows the GN&C subsystem operational mission phase reliability summary

Table XVIII shows the ACE operational mission phase reliability summary.

Table XVII. GN&C Subsystem Reliability Summary

5 YEARS MISSION DURATION

* 6/18/93 GN AND C SUBSYSTEM SPACECRAFT PDR

BLOCK	DESCRIPTION	NOTES	DUTY CYCLE	FAIL RATE (FITS)	BOX RLBLTY	STDBY ACTIVE	INTRMDT Ps	FINAL Ps
5.1	ACE WHEEL DRIVER CIRCUIT		100.0%	120.6	.9947286			
5.2	REACTION WHEELS	SUB ESTIMATE			.97			
	SUB-TOTAL WHEEL DRIVER/RW				.9648868	4/3 A		.9929442
5.3	IRU- GYRO CHANNEL	SUB ESTIMATE			.9285	3/2 A		.9853943
5.4	MAG TORQUERS	ESTIMATE	100.0%	8	.9996495	2/1A X3		.9999996
5.5	COARSE SUN SENSOR	SUB ESTIMATE	100.0%	50	.9978111	2/1 A		.9999952
5.6	ACE	SEE ACE MODEL						.9805975
5.7	SS STAR TRACKER	SUB ESTIMATE	100.0%		.94			
5.11	FINE SUN SENSOR	SUB ESTIMATE	100.0%	500	.9783258			
	SUB-TOTAL SSST/FSS	SPCOUNT				3/2 A		.9941162
5.8	MAGNETOMETER	SUB ESTIMATE	100.0%	497	.9784545	2/1 SB		.9997430
5.9	EARTH SENSOR	ESTIMATE	100.0%	793	.9658437	2/1 A		.9988333
	PSU - EPC		100.0%	419	.9818049			
	PSU - FUSES		100.0%	9	.9996057	X8	.9968496	
	PSU - RELAYS		50.0%	2.14	.9999484	X5	.9997421	
5.10	SUB-TOTAL PSU	ESTIMATE			.9784594	2/1 A		.9995360
						GN&C SUBSYSTEM		.9520076

Table XVIII. ACE Reliability Summary

* 10/28/92 ACE
BASELINE: GRADE 1 AND GRADE 2 PARTS

BLOCK	DESCRIPTION	NOTES	DUTY CYCLE	FAIL RATE (FITS)	BOX RLBLTY	STDBY ACTIVE	INTRMDT Ps	FINAL Ps
5.5.1	A5/A20 COMP STATUS MON & TLM		100.0%	363.9	.9841786	2/1 ACT	.9997497	
5.5.2	A7/A22 IRU RATE PROCESSOR		100.0%	189.9	.9917122	2/1 ACT	.9999313	
5.5.3	A13/A28 WHEEL DRIVER	SEE SS MODEL						
5.5.4	A14/A29 TORQUER DRIVER		100.0%	230.7	.9899405	2/1 ACT	.9998988	
5.5.5	A15/2 ACR RELAY BD #1		1.0%	40.6	.9998061	2/1 ACT	1.000000	
5.5.6	A30/2 ACE RELAY BD #2		1.0%	162.2	.9992255	2/1 ACT	.9999994	
5.5.7	A43/2 TORQUER TRAY MOD ASSY		100.0%	135	.9941011	2/1 ACT	.9999652	
5.5.8	A46/2 ACE POWER X-STRAP		1.0%	69.7	.9996671	2/1 ACT	.9999999	
	SUBTOTAL ACE (ACTIVE REDUND)							.9995443
5.6.1	A1/A16 CLOCK TIMING		100.0%	492.5	.9786475			
5.6.2	A2/A17 PROGRAMMER CONTROL		100.0%	408.8	.9822439			
5.6.3	A3/A18 RAM ARITHMETIC		100.0%	381.2	.9834327			
5.6.4	A4/A19 PI ITP CONV		100.0%	245.1	.9893160			
5.6.5	A6/A21 RIU TLM INT & RBIC		100.0%	244.4	.9893463			
5.6.6	A8/A23 SHE CONTROL AMP		100.0%	150.3	.9934347			
5.6.7	A9/A24 DRIVE CNTL & MAG BIAS		100.0%	346.7	.9849207			
5.6.8	A10/A25 WHEEL CNTL & COMPEN		100.0%	113	.9950600			
5.6.9	A11/A26 TORQUER CNTL		100.0%	123.6	.9945979			
5.6.10	TOP LEVEL COMPONENTS		100.0%	313.5	.9863548			
	A12/A27 THRST INT NOT USED							
5.6.11	A44/A45 POWER SUPPLY		100.0%	200	.9912733			
5.6.12	A63/A66 SHDP INPUT		100.0%	286	.9875443			
5.6.13	A64/A67 SHDP PROCESSOR		100.0%	599	.9740904			
5.6.14	A65/A68 SHDP OUTPUT		100.0%	598	.9741331			
5.6.15	A49/2 FUSE BOARD ASSY		100.0%	36.6	.9983973			
	SUBTOTAL ACE (STANDBY REDUND)				.8196249	2/1 SB		.9810445
							TOTAL ACE	.9805975 £

5.6 Thermal Control Subsystem (TCS) Reliability Assessment

5.6.1 Description

The EOS–AM TCS is required to maintain all Spacecraft components and Instrument interfaces within allowable thermal limits throughout all operating and non–operating conditions.

The thermal design philosophy maximizes the use of passive thermal control techniques such as selective conductive couplings, e.g., low conductance standoffs for isolating equipment, and conductive gaskets for equipment requiring good conductive couplings. Selective thermal finishes are also employed for various components/structures, e.g., low emissivity (ε) tape or multilayer insulation (MLI) for radiative isolation, and high emissivity/low absorptivity (α) surfaces (optical solar reflectors) for radiators. For components/equipment with more stringent requirements, active thermal control methods are employed. A Spacecraft–provided capillary pumped heat transport system (CPHTS) provides thermal control of the Instrument interfaces which cannot reject their heat locally from the instrument. Constant conductance heat pipe radiator panels are used to equalize temperature gradients in selected EMs as well as on the CPHTS radiators. Where required, autonomously controlled heaters ensure that minimum temperature requirements are maintained. Heater control electronics and thermostats are used for heater control. Key features of the EOS–AM TCS are shown in Figure 21.

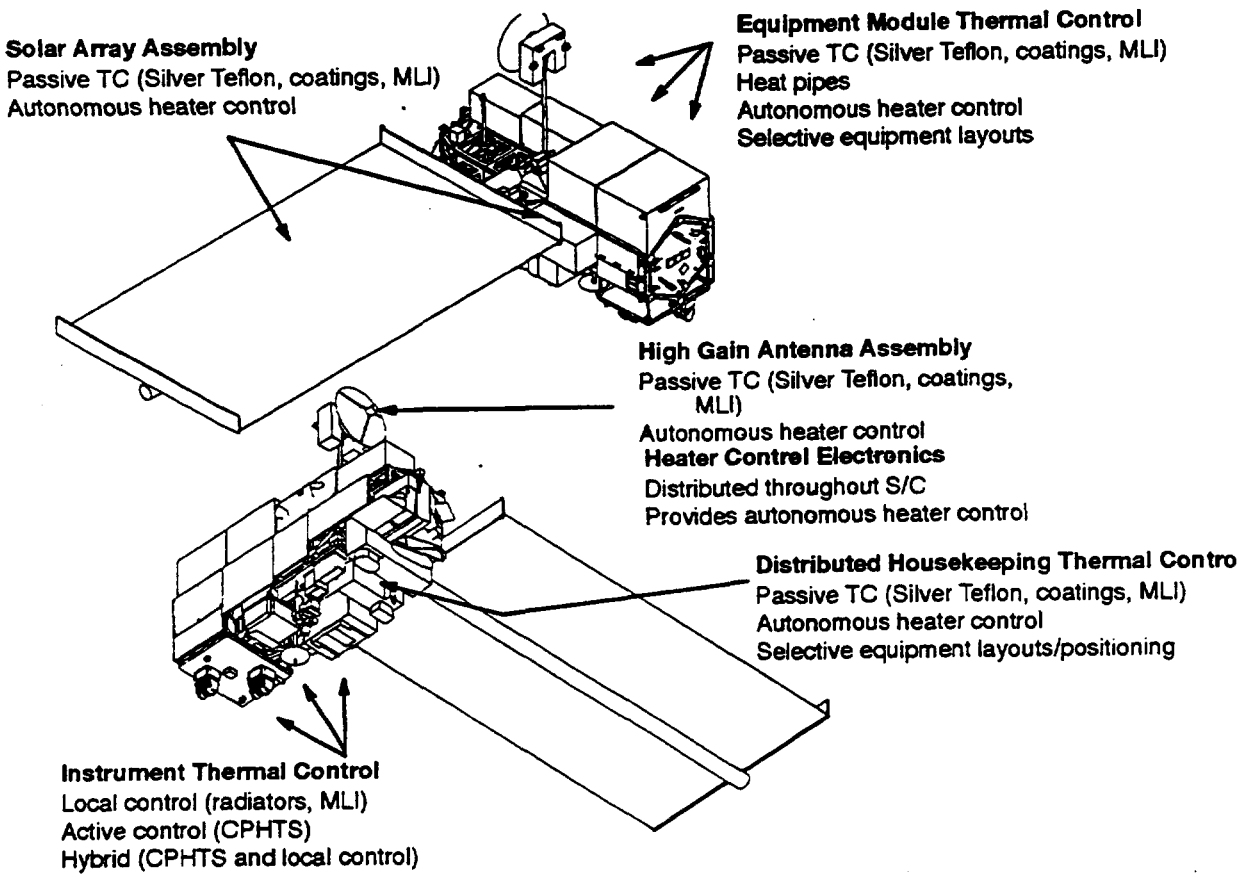

Figure 21. TCS Key Features

5.6.2 Functional Block Diagram

A functional diagram of the various thermal control methods is shown in Figure 22.

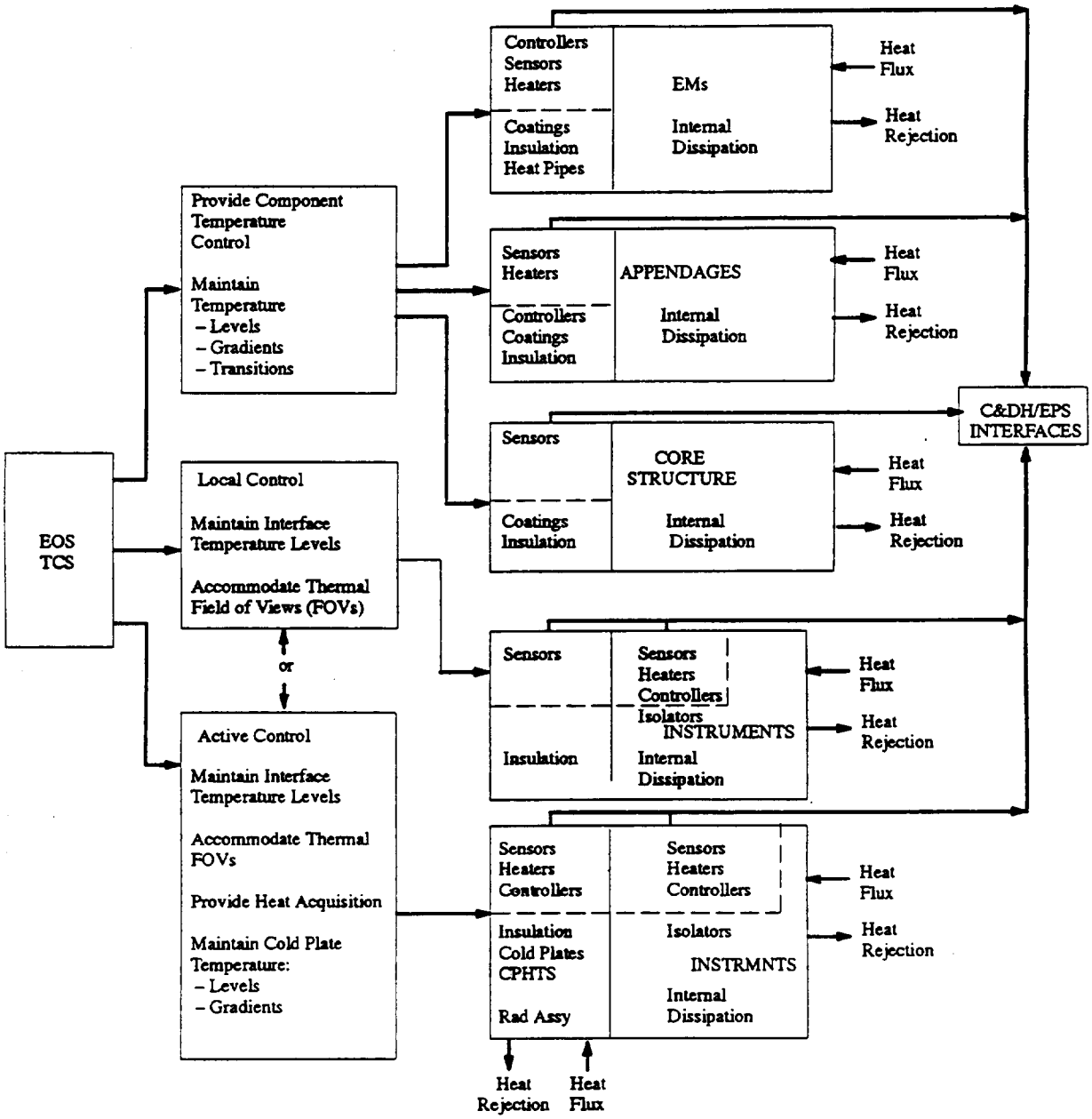

Figure 22. Thermal Control Subsystem Functional Block Diagram

5.6.3 Reliability Block Diagram

The TCS reliability block diagram is shown in Figure 23.

The CPHTS reliability block diagram is shown in Figure 24.

The equipment module reliability block diagram is shown in Figure 25.

The distributed housekeeping reliability block diagram is shown in Figure 26.

5.6.4 Equipment Redundancy

The thermal control subsystem by design is fully redundant using both active and passive thermal control techniques. The CPHTS is fully redundant. The equipment module thermal control equipment is also fully redundant. Operational heaters and survival heater are utilized throughout the Spacecraft to assure reliable equipment operation. Operational heaters are assumed to have a 100% duty cycle and the survival heaters are assumed to have a 1% duty cycle. All heater primary and backup thermistors and HCEs are active while heater elements are active and backup heater elements are in standby.

The propulsion module and the battery assembly thermal control equipment are included with the propulsion subsystem and the battery assessment reliability assessments respectively.

5.6.5 Equipment Failure Rates

The thermal control subsystem has some component failure rates which are not included in MIL–HDBK–217. Appendix II provides a summary of these components.

The HCE and thermistor failure rates were derived form MIL–HDBK–217. The heater element failure rate of 5 FITs was used on a previous program.

The failure rates for the CPHTS equipment were based on engineering judgements from comparisons to equipment from previous Martin Marietta Astro Space programs. The CPHTS subcontractor PDR reliability assessment did not provide enough detailed reliability information for use in the Spacecraft PDR analysis.

5.6.6 Updates to the Reliability Assessment

The following significant changes have been made to the previous Spacecraft Bus, subsystem and individual component PDR reliability assessments:

a. VCHPs have been eliminated from the design.

b. The HCE failure rates have been revised to reflect the HCE PDR designs.

c. The quantities of the thermal control equipment have changed.

5.6.7 Probability of Success (Ps) Summary

The calculated TCS Ps for the launch/ascent mission phase is Ps = 0.999999 for 0.5 hours.

Block #	Equipment Description	Duty Cycle (%)	FITs	Pre-OP Phase Ps	Operational Phase Ps (5 YRs)
1	Capillary Pumped Heat Transport System (CHPTS)	100	**	0.999990	0.999053
2	Recorder Equipment Module	100	**	1.000000	0.999985
3	Power Equipment Module	100	**	1.000000	0.999999
4	GN & C Sensor Equipment Module	100	**	1.000000	0.999983
5	Comm/C&DH Equipment Module	100	**	1.000000	0.999971
6	RWA Equipment Module	100	**	1.000000	0.999984
7	DAS Panel	100	**	1.000000	0.999991
8	Distributed House-keeping thermal control	100	**	1.000000	1.000000
9	Multi layer insulation (MLI)	100	Ps= 0.9999	1.000000	0.999900
10	Silver Teflon tape	100	Ps= 0.9999	1.000000	0.999900
11	Propulsion Module	100	***	–	–
12	Battery panel	100	***	–	–
	TCS reliability prediction			0.999989	0.998766
	TCS reliability allocation				0.998

* Internally redundant
** See separate reliability block diagram
*** Covered under Propulsion and Electrical Power subsystems

Figure 23. Thermal Control Subsystem Reliability Block Diagram

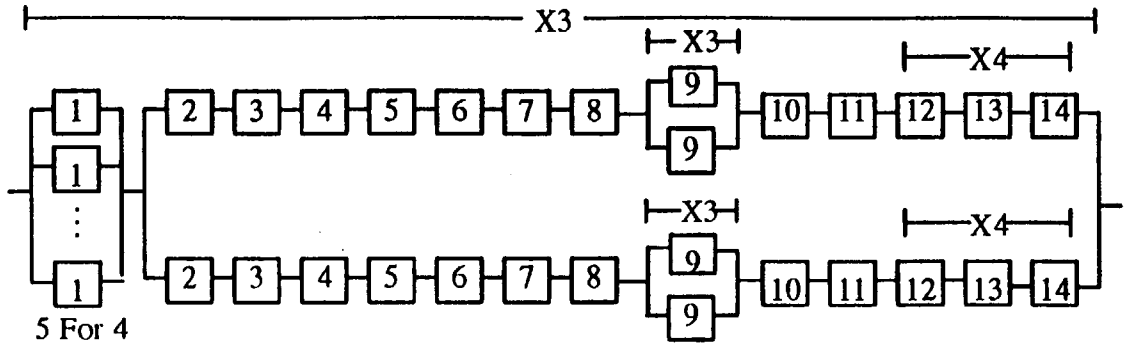

Block #	Equipment Description	Duty Cycle (%)	FITs
1	Heat pipe spreader (TIR 3/2, SWIR/MOPITT 5/4)	100	5
2	Heat pipe header	100	5
3	Heat exchanger	100	15
4	Non-compressable gas trap & pressure switch	100	100
5	Reservoir	100	30
6	Reservoir operational heater – thermistor	100	.525
7	Reservoir operational heater – HCE (Type 3)	100	88.3
8	Reservoir operational heater – element	100	5
9	Fill / drain valve seal	100	70
10	Transport lines & flex lines	100	120
11	Cold plate capliiary pumps	100	25
12	Cold plate survival heater – thermistor	1	.525
13	Cold plate survival heater – HCE (Type 2)	1	40.2
14	Cold plate survival heater – element	1	5

Figure 24. CPHTS Reliability Block Diagram

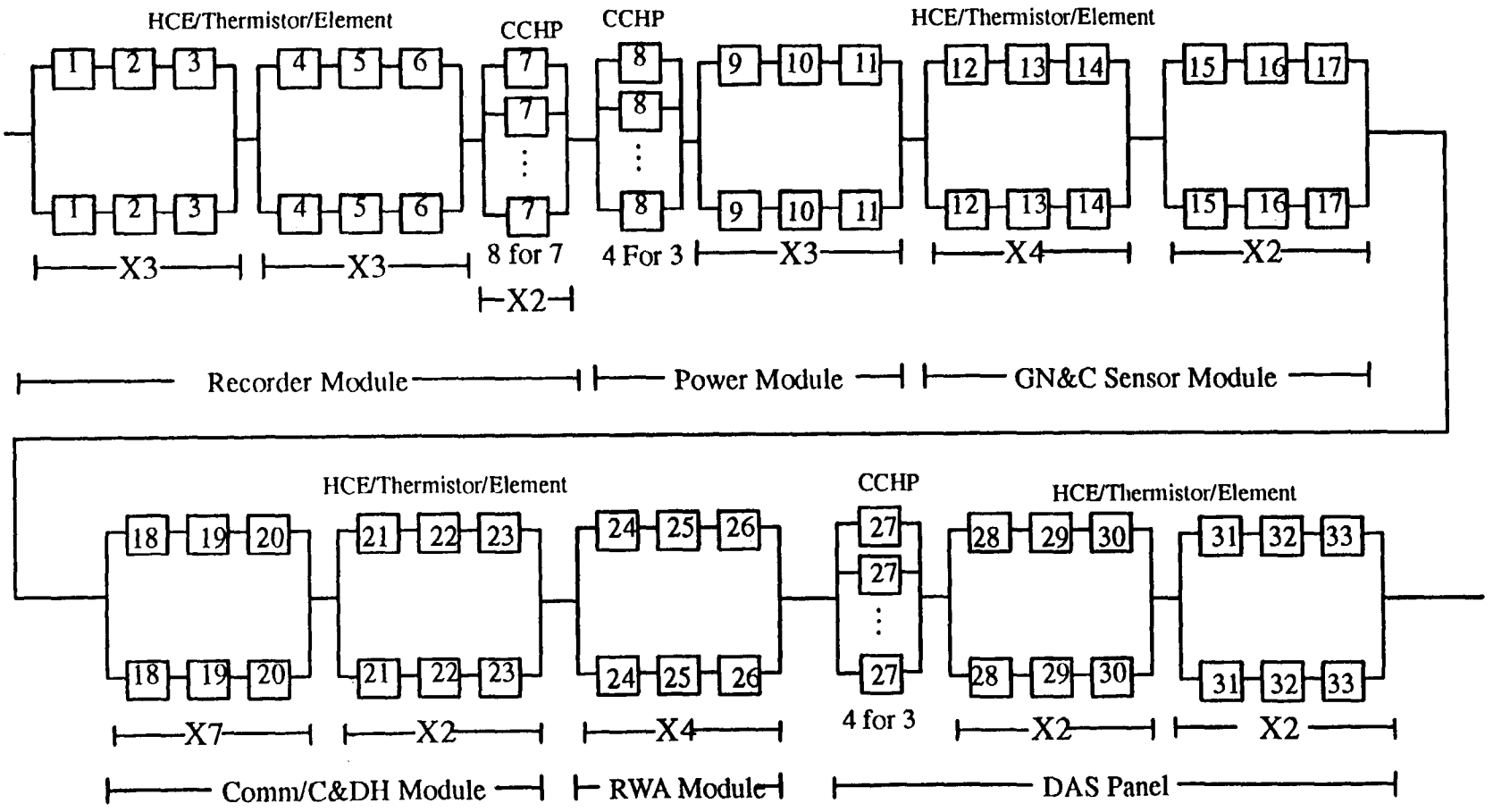

Figure 25. Equipment Module Reliability Block Diagram

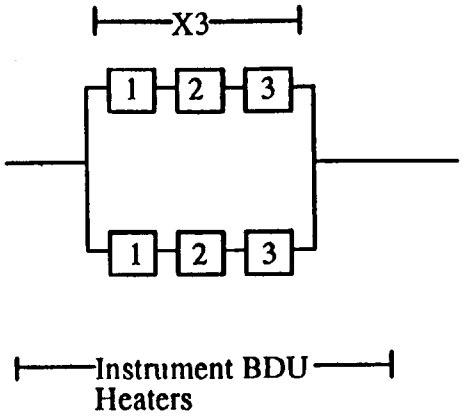

Block #	Equipment Description	Duty Cycle (%)	FITs
1	BDU survival heater – thermistor	1	.525
2	BDU survival heater – HCE (Type 2)	1	40.2
3	BDU survival heater – element	1	5

Figure 26. Distributed Housekeeping Thermal Control Reliability Block Diagram

The calculated TCS Ps for the pre–operational mission phase is Ps = 0.999989 for 120.5 hours.

The calculated TCS Ps for the operational mission phase is Ps = 0.998766 for 5 years.

5.6.8 Failure Rate Details

Figure 23 shows the TCS operational mission phase reliability summary.

Table XIX shows the CPHTS operational mission phase reliability summary.

Table XX shows the equipment module operational mission phase reliability summary.

Table XXI shows the distributed housekeeping operational mission phase reliability summary.

Table XIX. CPHTS Reliability Summary

CPHTS BLOCK	DESCRIPTION	DUTY CYCLE	FAIL RATE (FITS)	BOX RLBLTY	STDBY ACTIVE	INTRMDT Ps	FINAL Ps
1	HEAT PIPE SPREADER (TIR 3/2, SWIR/MOPITT 5/4)	100.0%	5	.9997809	5/4 A		.9999995
2	HEAT PIPE HEADER	100.0%	5	.9997809			
3	HEAT EXCHANGER	100.0%	15	.9993428			
4	NON-COMPRESSABLE GAS TRAP & PRESSURE SWITCH	100.0%	100	.9956271			
5	RESERVOIR	100.0%	30	.9986861			
6	RESERVOIR OPERATIONAL HEATER - THERMISTOR	100.0%	.525	.9999770			
7	RESERVOIR OPERATIONAL HEATER - HCE TYPE 3	100.0%	88.3	.9961377			
8	RESERVOIR OPERATIONAL HEATER - ELEMENT	100.0%	5	.9997809			
9	FILL/DRAIN VALVE SEAL	100.0%	70	.9969370	2/1A X3	.9999719	
10	TRANSPORT LINES & FLEX LINES	100.0%	120	.9947548			
11	COLD PLATE CAPILLARY PUMPS	100.0%	25	.9989050			
12	COLD PLATE SURVIVAL HEATER - THERMISTOR	1.0%	.525	.9999975	X4	.9999900	
13	COLD PLATE SURVIVAL HEATER - HCE TYPE 2	1.0%	40.2	.9998080	X4	.9992322	
14	COLD PLATE SURVIVAL HEATER - ELEMENT	1.0%	5	.9999761	X4	.9999045	
	SUB-TOTAL			.9822179	2/1A		.9996838
	SINGLE CPHTS						.9996833
	TOTAL CPHTS						.9990503

Table XX. Equipment Module Reliability Summary

EQUIPMENT MODULE BLOCK	DESCRIPTION	DUTY CYCLE	FAIL RATE (FITS)	BOX RLBLTY	STDBY ACTIVE	INTRMDT Ps	FINAL Ps
	RECORDER MODULE						
1	OPERATIONAL HEATER THERMISTOR	100.0%	.525	.9999770			
2	OPERATIONAL HEATER HCE TYPE 2	100.0%	40.2	.9982398			
3	OPERATIONAL HEATER ELEMENT	100.0%	5	.9997809			
	SUB-TOTAL			.9979981	2/1A X3	.9999880	
4	SURVIVAL HEATER THERMISTOR	1.0%	.525	.9999975			
5	SURVIVAL HEATER HCE TYPE 2	1.0%	40.2	.9998080			
6	SURVIVAL HEATER ELEMENT	1.0%	5	.9999761			
	SUB-TOTAL			.9997816	2/1A X3	.9999999	
7	RECORDER MODULE CCEP	100.0%	5	.9997809	8/7A X2	.9999973	
	SUB-TOTAL RECORDER MODULE						.9999851
	POWER MODULE						
8	POWER MODULE CCEP	100.0%	5	.9997809	4/3A	.9999997	
9	SURVIVAL HEATER THERMISTOR	1.0%	.525	.9999975			
10	SURVIVAL HEATER HCE TYPE 2	1.0%	40.2	.9998080			
11	SURVIVAL HEATER ELEMENT	1.0%	5	.9999761			
	SUB-TOTAL			.9997816	2/1A X3	.9999999	
	SUB-TOTAL POWER MODULE						.9999996
	GN&C SENSOR MODULE						
12	OPERATIONAL HEATER THERMISTOR	100.0%	.525	.9999770			
13	OPERATIONAL HEATER HCE TYPE 2	100.0%	40.2	.9982398			
14	OPERATIONAL HEATER ELEMENT	100.0%	5	.9997809			
	SUB-TOTAL			.9979981	2/1A X4	.9999840	
15	SURVIVAL HEATER THERMISTOR	1.0%	.525	.9999975			
16	SURVIVAL HEATER HCE TYPE 2	1.0%	40.2	.9998080			
17	SURVIVAL HEATER ELEMENT	1.0%	5	.9999761			
	SUB-TOTAL			.9997816	2/1A X2	.9999999	
	SUB-TOTAL SENSOR MODULE						.9999839
	COMM/C&DH MODULE						
18	OPERATIONAL HEATER THERMISTOR	100.0%	.525	.9999770			
19	OPERATIONAL HEATER HCE TYPE 2	100.0%	40.2	.9982398			
20	OPERATIONAL HEATER ELEMENT	100.0%	5	.9997809			
	SUB-TOTAL			.9979981	2/1A X7	.9999719	
21	SURVIVAL HEATER THERMISTOR	1.0%	.525	.9999975			
22	SURVIVAL HEATER HCE TYPE 2	1.0%	40.2	.9998080			
23	SURVIVAL HEATER ELEMENT	1.0%	5	.9999761			
	SUB-TOTAL			.9997816	2/1A X2	.9999999	
	SUB-TOTAL COMM/C&DH MODULE						.9999719
	RWA MODULE						
24	OPERATIONAL HEATER THERMISTOR	100.0%	.525	.9999770			
25	OPERATIONAL HEATER HCE TYPE 2	100.0%	40.2	.9982398			
26	OPERATIONAL HEATER ELEMENT	100.0%	5	.9997809			
	SUB-TOTAL RWA PANEL			.9979981	2/1A X4		.9999840
	DAS PANEL						
28	OPERATIONAL HEATER THERMISTOR	100.0%	.525	.9999770			
29	OPERATIONAL HEATER HCE TYPE 2	100.0%	40.2	.9982398			
30	OPERATIONAL HEATER ELEMENT	100.0%	5	.9997809			
	SUB-TOTAL			.9979981	2/1A X2	.9999920	
31	SURVIVAL HEATER THERMISTOR	1.0%	.525	.9999975			
32	SURVIVAL HEATER HCE TYPE 2	1.0%	40.2	.9998080			
33	SURVIVAL HEATER ELEMENT	1.0%	5	.9999761			
	SUB-TOTAL			.9997816	2/1A X2	.9999999	
27	DAS PANEL CCEP	100.0%	5	.9997809	4/3A	.9999997	
	SUB-TOTAL DAS PANEL						.9999916

Table XXI. Distributed Housekeeping Reliability Summary

DISTRIBUTED HOUSE-KEEPING BLOCK	DESCRIPTION	DUTY CYCLE	FAIL RATE (FITS)	BOX RLBLTY	STDBY ACTIVE	INTRMDT Ps	FINAL Ps
1	SURVIVAL HEATER THERMISTOR	1.0%	.525	.9999975			
2	SURVIVAL HEATER HCE TYPE 2	1.0%	40.2	.9998080			
3	SURVIVAL HEATER ELEMENT	1.0%	5	.9999761			
	SUB-TOTAL INSTRUMENT BUS			.9997816	2/1A X3		.9999999

5.7 Structures and Mechanisms Subsystem (SMS) Reliability Assessment

5.7.1 Description

The SMS provides the necessary structural support and mounting area for all Instruments and Spacecraft bus equipment. The SMS is designed to satisfy multiple constraints including: launch environment, launch vehicle fairing static envelope, AM instrument set science and thermal fields–of–view (FOVs), and pointing stability. The SMS includes the release and deployment mechanism for the high–gain antenna. The SMS also provides the interface to the launch vehicle separation system.

5.7.2 Structures

The EOS–AM Spacecraft structure consists of the primary structure, EMs, equipment panels, instrument accommodation structures, and other secondary structures which support harnessing and components mounted to the primary structure.

The Spacecraft structure is not included in the Spacecraft reliability assessment. The Spacecraft structure is assumed to have a 100% probability of success, since, as part of standard design practices, the structure will have sufficient margins to preclude the possibility of any failures.

5.7.2.1 Restraint/Deployment Mechanisms

The HGA restraint/deployment system is currently under evaluation for redesign. For the Spacecraft PDR the following baseline deployment system was used: The HGA deployment system incorporates a graphite/epoxy boom with a spring–driven hinge to achieve the proper extension from the Spacecraft. A damper allows for a controlled deployment away from the Spacecraft, and a redundant spring ensures reliability.

The means for restraining the solar array assembly (SAA) will be provided by the solar array subcontractor, however, it will likely incorporate pyrotechnic separation nuts to achieve restraint and controlled release. The pyrotechnic devices will employ redundant charges and electronics. The subcontractors preliminary reliability assessment was used as the baseline in the Spacecraft analysis

The solar array is deployed using an Astro mast cannister design. The flexible blanket array is deployed by first initiating the blanket box separation system. Once the blanket box is released, the array is rotated to the X–Y plane via the spring driven elevation hinge. Following rotation of the array, the blanket box latches are released allowing separation of both halves of the blanket box. Finally, the Astro mast motor is activated, which deploys the mast, unfolding the flexible blanket to its final position.

5.7.2.2 Solar Array Drive (SAD)

The SAD, mounted to the zenith side of the primary structure, is a precision incremental stepping device capable of rotating the array in a forward or reverse direction at various speeds. A reduction gear set provides sufficient torque to overcome the worst case solar array inertial torques reacted to

the SAD and the frictional drag of the fiber brush slip ring assembly and bearings. The motor has two sets of windings for redundancy. The slip ring assembly is used to transfer the electric power and data signals across the rotating interface to the Spacecraft.

The SAD is included in the electrical power subsystem reliability assessment. It is appropriate to include the SAD in the electrical power subsystem analysis because the SAD is required to operate throughout the mission.

5.7.2.3 Launch Vehicle Separation System

The Launch vehicle separation system is comprised of six discrete separation nut systems. The head of each separation bolt is housed in a bay 1 node fitting. The launch vehicle side of the interface houses the nut end and attaches to fittings which form part of the launch vehicle adapter. This system was chosen to allow a simpler interface to the launch vehicle and was more weight efficient than a continuous ring interface. Separation velocity is achieved by employing a set of separation springs that push off the launch vehicle adapter. The springs are designed such that a failure of one will not prevent achieving the necessary velocity required for proper separation.

The Launch vehicle separation system is <u>not</u> included in the Spacecraft reliability assessment because it is not considered as part of the Spacecraft equipment. However, each of the six separation nuts are single point failures to the Spacecraft mission.

5.7.3 Reliability Block Diagram

The HGA deployment system reliability block diagram is shown in Figure 27.

The SA deployment system reliability block diagram is shown in Figure 28.

5.7.4 Equipment Redundancy

The HGA deployment system contains both redundant and non–redundant equipment. The pyrotechnic relay assembly (PRA) are 2 for 1 actively redundant. The PRA is comprised of primary and redundant strings of an enable relay, arm relay, fire relay, EMI filter, miscellaneous resistors and capacitors and a pyro initiator. The negator spring is also redundant.

The following HGA deployment system components are series elements: separation nuts, damper, potentiometer, shaft bearings and a latch. The failure of any one of these serial components could result in the failure of the HGA to deploy, and cause the HGA system to be unusable for mission operations. The HGA serial components are not considered single point failures to the Spacecraft because the DAS system can completely backup the Ku–Band equipment.

The SA deployment system contains some components that are serial elements and single point failures to the Spacecraft. The single point failures are basically the mechanical components: gears, bearings, longerons, battens, hinges, linkage assemblies etc. The failure of anyone of these components would result in the failure of the SA to deploy correctly and would result in the loss of the Spacecraft.

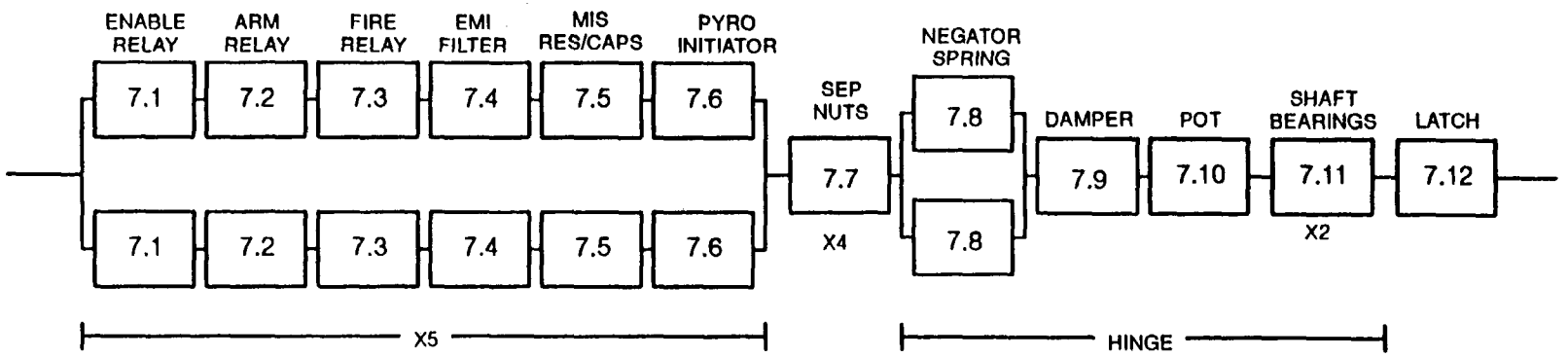

Figure 27. HGA Deployment System Reliability Block Diagram

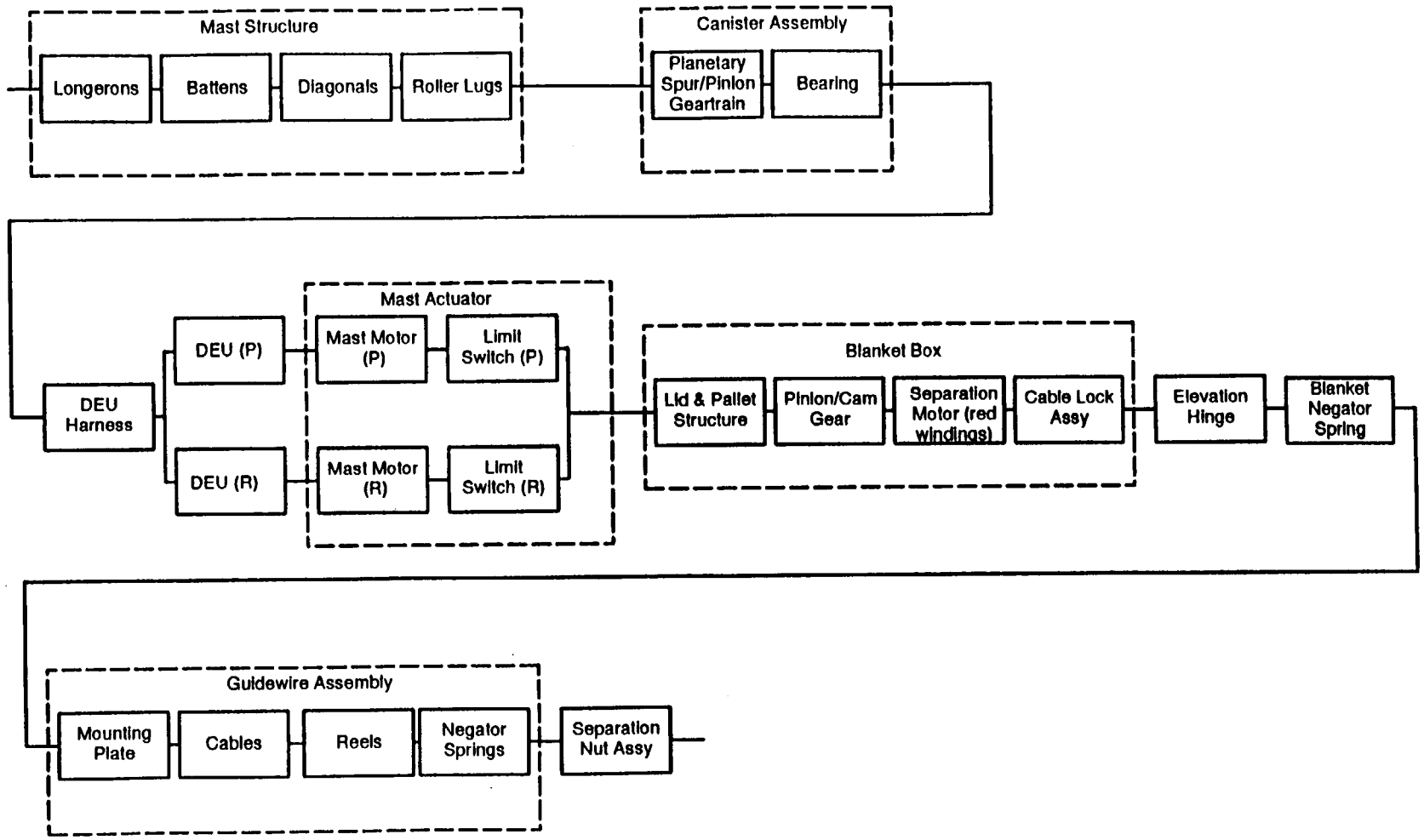

Figure 28. SA Deployment System Reliability Block Diagram

5.7.5 Equipment Failure Rates

The failure rates for the PRA components were derived from MIL–HDBK–217. The failure rates for the following HGA deployment components were taken from previous Martin Marietta Astro Space programs: separation nuts, negator springs, damper, potentiometer (bearings) shaft bearings and the latch.

The SA deployment component failure rates were supplied by the subcontractor (TRW). The failure rates were based on subcontractor estimates. Some of the estimates were based on stress/strength method analyzing margins of safety. RAC document NPRD–91 was also used as a source for the failure rates.

Appendix II provides a summary of the failure rates which are not taken form MIL–HDBK–217 and the SA deployment subcontractors failure rates.

5.7.6 SMS Mission Phases

The HGA deployments and the SA deployment occurs during the pre–operational mission phase. For the Spacecraft PDR reliability assessment the HGA deployment was assumed to occur within 24 hours of launch. The SA deployment was assumed to occur within 2 hours of launch.

5.7.7 Updates to the Reliability Assessment

The following significant changes have been made to the previous Spacecraft Bus, subsystem and individual component PDR reliability assessments:

a. The SA deployment reliability assessment is based on the SAA PDR design.

b. The HGA deployment system now has five deployment/restraint mechanisms instead of four.

5.7.8 Probability of Success (Ps) Summary

The HGA deployment system has a calculated Ps of 0.999985 for 24 hours.

The SA deployment system has a calculated Ps of 0.999964 for 2 hours.

The total calculated deployments Ps is 0.999950 for the pre–operational mission phase.

5.7.9 Failure Rate Details

Table XXII summarizes the HGA deployment reliability summary.

Table XXIII summarizes the SA deployment reliability summary.

Table XXII. HGA Deployment Reliability Summary

F/N SMS_1 STRUCTURES/MECHANISMS SUBSYSTEM SPACECRAFT PDR
7/ 1/93

HGA DEPLOYMENT (24 HOURS)	.999985
SA DEPLOYMENT (2 HOURS)	.9999646
TOTAL DEPLOYMENT	.999950

MISSION DURATION 24 HOURS .00274 YEARS

HGA DEPLOYMENT

BLOCK	DESCRIPTION	NOTES	DUTY CYCLE	FAIL RATE (FITS)	BOX RLBLTY	STDBY ACTIVE	INTRMDT Ps	FINAL Ps
	HGA DEPLOYMENT							
7.1	ENABLE RELAY	MIL-HDBK-217	100.0%	1.22	1.000000			
7.2	ARM RELAY	MIL-HDBK-217	100.0%	1.22	1.000000			
7.3	FIRE RELAY	MIL-HDBK-217	100.0%	.66	1.000000			
7.4	EMI FILTER	MIL-HDBK-217	100.0%	18.6	.9999996	X4	.9999982	
7.5	MISC RES,CAPS, DIODE ARRAYS	MIL-HDBK-217	100.0%	4.7806	.9999999			
7.6	PYROTECHNIC INITIATOR		1 CYCLE		.9997			
	SUB-TOTAL				.9996980	2/1A X5		.9999995
7.7	SEPARATION NUTS	TELSTAR 4	100.0%	6	.9999999	X4		.9999994
7.8	NEGATOR SPRING	TELSTAR 4	1 CYCLE	110	.9999997	2/1 ACT		1
7.9	DAMPER	TELSTAR 4	100.0%	500	.9999880			.9999880
7.10	POTENTIOMETER	INMARSAT	100.0%	22	.9999995			.9999995
7.11	SHAFT BEARINGS	TELSTAR 4	100.0%	10	.9999998	X2		.9999995
7.12	LATCH	TELSTAR 4	100.0%	20	.9999995			.9999995
						HGA DEPLOYMENT		.9999855

Table XXIII. SA Deployment Reliability Summary

MISSION DURATION 2 HOURS .00023 YEARS

SA DEPLOYMENT

BLOCK	DESCRIPTION	NOTES	DUTY CYCLE	FAIL RATE (FITS)	BOX RLBLTY	STDBY ACTIVE	FINAL Ps
	SOLAR ARRAY DEPLOYMENT	SUB ESTIMATES					
	MAST STRUCTURE						
	LONGERONS	STRESS/STRENGTH				X3	.9999997
	BATTENS	STRESS/STRENGTH					.9999997
	DIAGONALS	STRESS/STRENGTH					.9999997
	ROLLER LUGS	STRESS/STRENGTH					.999999
	CANISTER ASSEMBLY						
	PLANETARY SPUR/PINION GEARTRAI	STRESS/STRENGTH					.9999985
	BEARING	STRESS/STRENGTH			.9999997	X2	.9999994
	DEU HARNESS	MIL-HDBK-217	100.0%	.01	1.000000	X2	1.000000
	DEU	MIL-HDBK-217	100.0%	764	.9999817		
	MAST MOTOR	NPRD-91	100.0%	871	.9999791		
	LIMIT SWITCH	SUB ESTIMATE	1.0%	21	.9999999		
	SUB-TOTAL				.9999607	2/1A	1.000000
	BLANKET BOX						
	LID AND PALLET STRUCTURE	STRESS/STRENGTH					.9999997
	PINION/CAM GEAR	STRESS/STRENGTH					.999999
	CABLE LOCK ASSEMBLY	STRESS/STRENGTH			.9999997	X6	.9999982
	SEPARATION MOTOR	SUB ESTIMATE	100.0%	130	.9999969	2/1A	1.000000
	ELEVATION HINGE ASSEMBLY	SUB ESTIMATE					.9999958
	BLANKET NEGATOR SPRING	STRESS/STRENGTH				X14	.999979
	GUIDEWIRE ASSEMBLY						
	MOUNTING PLATE	STRESS/STRENGTH					.9999997
	CABLES	STRESS/STRENGTH				X6	.9999994
	REELS	STRESS/STRENGTH				X12	.9999994
	NEGATOR SPRING	STRESS/STRENGTH				X6	.9999998
	SEPARATION NUT ASSEMBLY	SUB ESTIMATE				X7	.9999979
					TOTAL SA DEPLOY		.9999646

6 NOTES

6.1 Definitions

Active redundancy — Two or more items, all of which are on–line (powered) at the same time. Of the total *n* items, *m* are required for success. The following symbol represents 2 for 1 active redundancy in the reliability block diagrams:

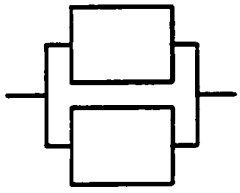

Standby redundancy — Two items, one designated primary, the other backup. Initially only the primary item is active. when the primary fails, the backup item is switched on–line. The primary being switched off–line at the same time. The ratio of the dormant (off–line) to active failure rate is assumed to be 0.1. The following symbol represents 2 for 1 standby redundancy in the reliability block diagrams:

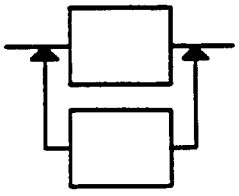

1 FIT — 1 failure per 10^9 hours of operation.

Series — A component or function with no redundancy.

6.2 Acronyms and Abbreviations

ASTER	Advanced Spaceborne Thermal Emission and Reflection Radiometer
CERES	Clouds and Earth's Radiant Energy System
C&DHS	Command and data Handling Subsystem
COMMS	Communications Subsystem
DAS	Direct Access Service
EAS	Electrical Accommodations Subsystem
EPS	Electrical Power Subsystem

GN&CS	Guidance, Navigation and Control Subsystem
MISR	Multi–Angle Imaging Spectro–Radiometer
MODIS	Moderate–Resolution Imaging Spectrometer
MOPITT	Measurements of Pollution in the Troposphere
PDR	Preliminary design review
Ps	Probability of Success
PROPS	Propulsion Subsystem
SMS	Structures and Mechanisms Subsystem
TCS	Thermal Control Subsystem

APPENDIX I

10 CATALOG OF RELIABILITY EQUATIONS

This appendix shows the equations used in the Spacecraft Reliability Assessment for the various redundancy configurations.

Configuration	Equation ID	Reliability Equation*
1. Series Exponential	Series	$R = e^{-\lambda t}$
2. Active Redundancy 2 units, equal λ	2/1 A	$R = 2e^{-\lambda t} - e^{-2\lambda t}$
3. Active Redundancy 2 units, unequal λ	2/1 UA	$R = e^{-\lambda_a t} + e^{-\lambda_b t} - e^{-(\lambda_a + \lambda_b)t}$
4. Standby Redundancy 2 units, equal λ	2/1 SB	$R = e^{-\lambda t} + \frac{\lambda}{\lambda_D}\left[e^{-(\lambda)t} - e^{-(\lambda + \lambda_D)t}\right]$
5. Active Redundancy m of n, equal λ m units needed n units available	M/N A	$R = \sum_{a=0}^{n-m} \binom{n}{a}\left[e^{-\lambda t}\right]^{(n-a)}\left[1 - e^{-\lambda t}\right]^{a}$ $where \binom{n}{a} = \frac{n!}{(n-a)!(a)!}$ and $0! = 1$

* Note: For any of the above equations, if the DC ≠ 1.0, calculate $\lambda_E = \lambda(DC) + \lambda_D(1-DC)$ and substitute λ_E for λ in the equation.

10.1 RELIABILITY EQUATION DEFINITIONS

R	Reliability expressed as a probability between 0 and 1.
DC	Duty cycle (ratio of operating time to mission time).
e	Is the base of the natural logarithms (e = 2.7182...).
λ	Failure rate expressed as failures per unit of time.
λ_a	Failure rate for first unit "a".
λ_b	Failure rate for second unit "b".
λ_D	Failure rate while component is in a dormant (standby) mode.
λ_E	Equivalent failure rate which accounts for the duty cycle. $\lambda_E = \lambda(DC) + \lambda_D(1-DC)$
t	Mission time.
n	Total number of units available.
m	Number of units needed.

APPENDIX II

20 NON MIL–HDBK–217 FAILURE RATES

This appendix shows the failure rates that are not based on MIL–HDBK–217.

Subsys-tem	Component	Failure Rate (FITs)	Source
All	Hand solder connection	0.07	RAC NPRD–91 data
EPS	Solar Cell	1	JPL Solar Array Design Handbook
	Slip Ring Brush	40	Martin Marietta
	Bearing	10	Martin Marietta
	Harmonic Drive Gear	10	Martin Marietta
	Harmonic Drive Oldham Coupling	10	Martin Marietta
	Slip Ring Brush Fiber	40	Martin Marietta
	Stepper Motor Winding	10	Martin Marietta
	Current Shunts	5.52	Martin Marietta
	Bus Insulation	1	Martin Marietta
GN&C	IRU– gyro	(TBD–2)	
Comm	HGA Components	(TBD–2)	SPAR
	Coax Switch	10	Martin Marietta
	Wave Guide Switch	52.3	Martin Marietta
	Diplexer	5	Martin Marietta
	Coupler	5	Martin Marietta
	Omni/X–Band Antenna	90	Martin Marietta
	3 DB Hybrid	7	Martin Marietta
TCS–CPHTS	Heat Pipe Spreader	5	Martin Marietta
	Heat Piper Header	5	Martin Marietta
	Heat exchanger	15	Martin Marietta
	Non–compressible Gas Trap & pressure switch	100	Martin Marietta
	Reservoir	30	Martin Marietta
	Fill/Drain Valve Seats	70	Martin Marietta
	Transport Lines & Flex Lines	120	Martin Marietta
	Cold Plate Capillary Pumps	25	Martin Marietta
	Heater Element	5	Martin Marietta
TCS–EM	CCHP	5	Martin Marietta
	Multi Layer Insulation	Ps = 0.9999	Martin Marietta
	Silver Teflon Tape	Ps = 0.9999	Martin Marietta
C & DH			

Subsys-tem	Component	Failure Rate (FITs)	Source
PROP	Propellant Tank	25.2	Martin Marietta
	Service Valve Seat	50	Martin Marietta
	Fuel Lines	50	Martin Marietta
	Fuel Filter	24	Martin Marietta
	Latch Valve, Leak/open	49.6	Martin Marietta
	Latch Valve Failed Closed	13.2	Martin Marietta
	5.0 LBF REA	120	Martin Marietta
	1.0 LBF REA	120	Martin Marietta
	Heater Element	5	Martin Marietta
SMS–SA Deploy-ment	Diagonal lacing	Ps = 0.9999997	Subcontractor – stress/strength method
	Battens	Ps = 0.9999997	Subcontractor – stress/strength method
	Longerons	Ps = 0.9999997	Subcontractor – stress/strength method
	Roller lugs	Ps = 0.9999997	Subcontractor – stress/strength method
	Ring gear	Ps = 0.9999997	Subcontractor – stress/strength method
	Pinion gear	Ps = 0.9999994	Subcontractor – stress/strength method
	Bearing	Ps = 0.9999994	Subcontractor – stress/strength method
	3–phase DC brushless motor	871	NPRD–91
	Limit switch	21	Subcontractor history
	Lid and pallet structure	Ps = 0.9999997	Subcontractor – stress/strength method
	3–phase DC brushless motor	130	Subcontractor history
	Cam gear	Ps = 0.9999994	Subcontractor – stress/strength method
	Cable lock assembly	Ps = 0.9999979	Subcontractor – stress/strength method
	Guidewire tension unit	Ps = 0.9999982	Subcontractor – stress/strength method
	Blanket tension spring assembly	Ps = 0.999979	Subcontractor estimate
	Elevation Hinge Assembly	see sub SDRL	Subcontractor estimate
	Separation nut assembly	Ps = 0.9999979	Subcontractor history

(Preliminary)
Limited Life List
for EOS–AM Spacecraft
(PA–560)

20008653
CAGE No. 49671
30 July 1993

(Preliminary) Limited Life List for EOS–AM Spacecraft (PA–560)

Prepared under:
Contract NAS5–32500
NASA Goddard Space Flight Center
Greenbelt, Maryland 20771

Prepared by:
Martin Marietta Corporation
Astro Space
P.O. Box 800
Princeton, New Jersey 08543–0800

DCC073093

REVISION LOG

This log identifies those portions of this document which have been revised since the original issue. Revised portions of each page, for the current revision only, are identified by marginal striping.

Revision	Paragraph Number(s) Affected	Rev. Date	Approval
Preliminary		07/30/93	EH

TABLE OF CONTENTS

SECTION / PARAGRAPH	TITLE	PAGE
1	INTRODUCTION	1
1.1	Purpose	1
1.2	Scope	1
1.3	Applicable Documents	1
1.4	Definitions	1
2	LIMITED LIFE ITEMS LIST FORMAT	2

LIST OF TABLES

TABLE	TITLE	PAGE
I	Limited Life Items	3

TBD LOG

ITEM	SECTION	PAGE	SUBJECT	RESP.	DUE
TBD–1	Table I	3	Limited Life Inputs	SPAR	Gimbal PDR
TBD–2	Table I	3	Limited Life Inputs	SPAR	TWTA PDR
TBD–3	Table I	3	Limited Life Inputs	SPAR	Gimbal PDR
TBD–4	Table I	3	Limited Life Inputs	SPAR	Gimbal PDR
TBD–5	Table I	3	Limited Life Inputs	SPAR	Gimbal PDR
TBD–6	Table I	3	Limited Life Inputs	SPAR	Gimbal PDR
TBD–7	Table I	3	Limited Life Inputs	Hanichak	Tank PDR
TBD–8	Table I	4	Limited Life Inputs	TRW	SAA CDR
TBD–9	Table I	4	Limited Life Inputs	Hanichak	SAD CDR
TBD–10	Table I	4	Limited Life Inputs	Hanichak	SAD CDR

1 INTRODUCTION

1.1 Purpose

The Limited Life Item List for the EOS Spacecraft Bus is presented in this report. The Limited Life Item List contains all components in the spacecraft bus which satisfy the selection criteria delineated in the GSFC PAR (420–02–05) and the Martin Marietta Performance Assurance Implementation Plan (20005397).

1.2 Scope

This is a preliminary list as required by GSFC Data Requirement PA–560. The Limited Life Items List is required to highlight and track design elements that may be adversely affected by the passage of time or by wear–out failure mechanisms. The listing will be updated as limited life items are identified and a final listing will be provided at spacecraft CDR.

1.3 Applicable Documents

The following documents, of the exact issue shown, form a part of this specification to the extent specified herein

20005397	EOS Performance Assurance Implementation Plan
Source:	Martin Marietta Astro Space P. O. Box 800 Princeton, NJ 08543–0800

1.4 Definitions

Limited Life Item	Any part or item that is subject to degradation because of age, operating time, or cycles, such that their expected useful life is less than twice the required life when fabrication, test, storage, and mission operations are combined.
Wear–Out Mechanism	A failure mechanism characterized by the degradation of a part due to cyclic operation. Typically found in mechanical parts, such as bearings, but also expressed by some purely electrical or electronic parts such as EEPROM and some electro–optical devices.

2 LIMITED LIFE ITEMS LIST FORMAT

Table I, Limited Life Items, is tabulated with the following information:

a. The limited life item (LLI) identification

b. The subassembly where the LLI is used in the EOS Spacecraft Bus

c. The life or cycle limits for this item

d. The required life/cycle limits for the item (includes required 2x margin)

e. The parameter that is of limiting nature for the item's application

f. The function of this limiting parameter in the EOS Spacecraft mission.

g. Refurbishment for this item as recommended by the item's manufacturer

h. Rationale for including and retaining this item in the design.

Table I. Limited Life Items

Item No.	Item Identification	Used in Subassembly	Expected Life/Cycle Limit	Duty Cycle/ Life Rqmt (with 2X)	Limiting Parameter	Limiting Parameter Function	Limitation Refurbishment	Rational for Retention
1	Stepper Motor	HGA – Elevation and Azimuth Gimbals	(TBD–1) Yrs	TBD–1	Mechanical part wear–out	Moves antenna assembly in azimuth & elevation	(TBD–1)	(TBD–1)
2	M–Type cathode	HGA – TWTA	(TBD–2)	20 years	Cathode aging	Ku–Band power and efficiency	(TBD–2)	(TBD–2)
3	Cable wrap	HGA – Gimbals	(TBD–3)	20 years	Wear/tear	power and signal cables	(TBD–3)	(TBD–3)
4	Harmonic Drive	HGA – Gimbals	(TBD–4)	20 years	Wear/tear	Movement in elevation and azimuth	(TBD–4)	(TBD–4)
5	Gears	HGA – Gimbals	(TBD–5)	20 years	Wear/tear	Movement in elevation and azimuth	(TBD–5)	(TBD–5)
6	Thermal finish on antenna	HGA – Antenna	(TBD–6)	10 years	Thermal finish (atomic oxygen bombardment)	Thermal control	(TBD–6)	(TBD–6)
7	Diaphragm Nordel 1440/2744 Blend	Propulsion – Tank	15.6 years (TBD–7)	20 years	none known	expulsion mechanism for hydrazine	(TBD–7)	(TBD–7)

Table I. Limited Life Items

Item No.	Item Identification	Used in Subassembly	Expected Life/Cycle Limit	Duty Cycle/ Life Rqmt (with 2X)	Limiting Parameter	Limiting Parameter Function	Limitation Refurbishment	Rational for Retention
8	NiH_2 battery cells	Power – battery panel	48 Months (@ 0 ±5°C) 5 yrs in orbit	11 years	electrode material	capacity/ performance	non–reversible	NiH_2 historic database
9	Buna–N o–rings	SMS – Primary Structure	3 – 5 years	3 years	hardening, cracking	seal adhesive during cure operation	none required	o–ring only has to perform during adhesive injection during structure fab.
10	Pyros	Power – Solar Array (TBR)	10 years	**(TBD–8)**	initiator charge, o–rings	release solar array	**(TBD–8)**	**(TBD–8)**
11	Pennzane SHF X2000	SMS – Solar Array Drive	**(TBD–9)**	**(TBD–9)**	breakdown of lubricant	lubrication for bearing	**(TBD–9)**	**(TBD–9)**
12	Rheolube 2000	SMS – Solar Array Drive	**(TBD–10)**	**(TBD–10)**	breakdown of lubricant	lubrication for bearing	**(TBD–10)**	**(TBD–10)**
13	O–Rings EPR, EPDM	Propulsion – REAs	10 years	20 years	hardening, cracking	seals in the pressure regulator and check valves	none required	Once isolated from oxygen there is no known life limiting mechanisms

(Preliminary)
Fabrication and Assembly Flow Plan for EOS–AM Spacecraft (PA–600)

20008647
CAGE No. 49671
30 July 1993

(Preliminary) Fabrication and Assembly Flow Plan for EOS–AM Spacecraft (PA–600)

Prepared under:
Contract NAS5–32500
NASA Goddard Space Flight Center
Greenbelt, Maryland 20771

Prepared by:
Martin Marietta Corporation
Astro Space
P.O. Box 800
Princeton, New Jersey 08543–0800

DCC080393

REVISION LOG

This log identifies those portions of this document which have been revised since the original issue. Revised portions of each page, for the current revision only, are identified by marginal striping.

Revision	Paragraph Number(s) Affected	Rev. Date	Approval
Prelim		07/30/93	ECH

TABLE OF CONTENTS

SECTION / PARAGRAPH	TITLE	PAGE
1	INTRODUCTION	1
1.1	Purpose	1
1.2	Scope	1
1.3	Summary	1
2	APPLICABLE DOCUMENTS	3
3	FABRICATION AND TEST OVERVIEW	5
3.1	Fabrication, Test Management, and Planning – Subcontract Items	5
3.2	Fabrication, Test Management, and Planning – Vendor Items	5
3.3	Fabrication, Test Management, and Planning – In House Items	5
4	ORGANIZATIONAL RESPONSIBILITIES	7
4.1	Engineering	7
4.2	Manufacturing	7
4.3	Quality Assurance/Product Assurance	8
4.4	Environmental Health and Safety	8
5	DOCUMENTATION	9
5.1	Work Instructions	9
5.2	Process Specifications	9
5.3	Test Procedures	10
6	FABRICATION FLOW DIAGRAM FOR PRINTED WIRING BOARD ASSEMBLIES	11
7	FABRICATION FLOW DIAGRAM FOR EOS COMPONENTS	17
8	FABRICATION FLOW DIAGRAM FOR PRIMARY/SECONDARY STRUCTURE	23
9	FABRICATION FLOW DIAGRAM FOR THERMAL SUBSYSTEM	39

1 INTRODUCTION

1.1 Purpose

This document describes the fabrication and assembly operations to be used in support of the EOS–AM Spacecraft. The document includes the inspection points (Astro Space and GSI), the tests to be performed as well as identifying any special processes to be used.

1.2 Scope

This document covers the fabrication and assembly operations performed at Astro, that occur prior to the Integration and Test activities which are documented separately in 20005405 (VRD–800). The flow diagrams presented were developed by EOS Manufacturing Engineers with inputs from their respective Product Teams.

The intent of this document is for the Product Teams to use the diagrams as a tool to develop the best approach to meeting their cost, schedule and technical requirements. As the teams progress through the detailed design phase, use of the attached diagrams will help to ensure supporting details such as fixtures, procedures, etc. are accounted for. The flow diagrams are also used by DPRO and GSFC to ensure customer mandatory inspection points are properly located.

The control mechanisms for documentation and procedures used at MMC subcontractors is also described in this document.

1.3 Summary

This document provides the information related to the assembly processes required to build the following flight hardware in support of the EOS–AM Spacecraft:

Section 6.0	Printed Wire Assembly Fabrication and Test
Section 7.0	Component (Black Box) Fabrication and Test
Section 8.0	Structure Fabrication and Test
Section 9.0	Thermal Subsystem Fabrication and Test

(This page intentionally left blank.)

2 APPLICABLE DOCUMENTS

20008548 5 March 1991	Manufacturing Plan (MD–107)
20005397 17 January 1992	Performance Assurance Implementation Plan (PA–100)
20004280	Subcontractor Performance Assurance Requirements for EOS–AM
20001395	EOS–AM Make/Buy Plan
20005405	Spacecraft Assembly Plan
Source:	Martin Marietta Astro Space P. O. Box 800 Princeton, NJ 08543–0800

(This page intentionally left blank.)

3 FABRICATION AND TEST OVERVIEW

The EOS Make/Buy Plan (20001395) provides a listing of hardware to be fabricated by Astro Space Division. The "make" items will be fabricated at one of Astro Space's fabrication facilities in accordance with the Manufacturing Management Plan (MD–107, 20008548) which include: East Windsor, Valley Forge, REC–South and REC–North. The provided flow diagrams list the facilities to be used (where known or where a factor).

The "Buy" items are either subcontracted items or vendor items. The subcontract items are controlled by a Performance Specification, a Statement of Work and the applicable documents which include the Performance Assurance Requirements. Vendor items are governed by the end item drawing and the purchase order which contains the applicable Performance Assurance Requirements.

3.1 Fabrication, Test Management, and Planning – Subcontract Items

The subcontracted items are governed by the EOS–AM Subcontractor Performance Assurance Requirements Document (20004280) which requires each subcontractor to provide a fabrication, assembly and test flow diagram at PDR and CDR. The flow diagrams are used by MMC Subcontract Quality Engineers to determine the location of MMC Mandatory Inspection Points (MIPs). A detailed review of the subcontractors fabrication documents is performed during the Manufacturing Readiness Reviews (MRR) when required by the SOW. An MRR is typically required if the hardware is a new design/product for the subcontractor, past experience with the subcontractor indicates a review is warranted, or the item is considered a critical or high risk item to the program.

A detailed review of the implementing test documentation is performed in support of the Data Pedigree review (DPR). The DPR is covered in detail in the subcontractor PAR (20004280).

3.2 Fabrication, Test Management, and Planning – Vendor Items

Typically, fabrication, assembly and test flow plans are not required for vendor items. Most vendor items are build to print and the required MMC in–process inspection points are determined by the Supplier Quality Engineer based on a review of the requirements for the procured item. The only notable exception to this general practice is in the EEE parts area where it may be necessary to review a manufactures assembly procedures for such items as hybrids.

3.3 Fabrication, Test Management, and Planning – In House Items

Component level and structure assembly planning and testing is the responsibility of the Manufacturing organization. The manufacturing organization is a member of the EOS Product Development teams. Each EOS Product Team is supported by a Production Control (PC) specialist and a Producibility Engineer (PE). Together, the PC and PE, ensure that parts are ordered in sufficient time to support fabrication, that the facilities necessary for fabrication and test are available in the needed time frame, and that the design is producible and testable with existing equipment (or required equipment is on order to support EOS fabrication/test schedule). The EOS–AM program schedule requirements are integrated with other MMC programs through the Production and Inventory Optimization System.

(This page intentionally left blank.)

4 ORGANIZATIONAL RESPONSIBILITIES

The following organizations will provide the defined support for the assembly and test of the EOS–AM components and assemblies (for in–house items):

4.1 Engineering

Engineering will provide the following:

a. Requirements (drawing/specification definition) for all assembly operations

b. Special Test Equipment (fully tested prior to mating with flight hardware)

c. Test Procedure (in conjunction with Test Engineering and Quality Assurance)

d. Participation in the resolution of anomalies

e. Test support for first article

f. Support Test Engineering in evaluation of test data results and trend analysis

g. Provide required analysis inputs to Verification Report

h. Linked bill of material in PIOS and configuration maintenance/control support to manufacturing during the build cycle

4.2 Manufacturing

Manufacturing will provide the following:

a. Manufacturing Engineering supports and accepts designs as producible

b. Fabrication Work Instructions (i.e., planning, FPRs, MSIs, etc.) required to fabricate/assemble the flight hardware

c. Production Control services for the timely delivery of components and hardware to the assembly/test area

d. Trained operators/technicians for fabrication and test of flight hardware. Operators will be certified for operations requiring certification (i.e., soldering, NDT, etc.)

e. Facilities for fabrication and test of flight hardware

f. Manufacturing Engineering and/or technician support for unplanned or rework/repair operations

g. Troubleshooting instructions (with Engineering and Quality Assurance support) for test failures

h. Perform Test Readiness prior to start of component level acceptance testing as well as prior to environmental (thermal/vibration) testing of flight components

i. Perform data reduction/evaluation (with support from Engineering) and prepare Verification Report upon completion of ATP.

j. Special tooling and tool control activities

4.3 Quality Assurance/Product Assurance

Quality Assurance/Product Assurance will provide the following:

a. Review of fabrication work instructions to ensure proper placement of inspection points

b. Training and certification of personnel for critical operations

c. Inspection of fabricated flight items in accordance with work instructions and released drawings/specifications

d. Disposition of nonconformances/failures (with support from Engineering and Manufacturing as required)

e. Perform Test Readiness Reviews prior to start of component level Acceptance Testing

f. Test data review and final sign–off for Verification Report

g. Tool acceptance and first article acceptance

h. Coding of MRs and vendor contract support

4.4 Environmental Health and Safety

Environmental Health and Safety will provide the following:

a. Review of Test Procedures to ensure safety of operators and flight hardware during testing

b. Review of work instructions for hazardous operations

5 DOCUMENTATION

The flow diagrams provided in this document refer to several different types of documentation that are required for various operations in the assembly/test flow. The following is a brief explanation of each document type used in the fabrication process.

5.1 Work Instructions

Work Instructions provide the written assembly instructions including inspection and test points, as well as the Government Mandatory inspection points for all assemblies. Work instructions have different "titles" depending on the work site [i.e., planning and Manufacturing Standing Instructions (MSIs) at VF, Flow Procedure Records (FPRs) at EW] as well as variations in format, however the information listed below is included regardless of work site.

a. Hardware nomenclature and identification

b. Latest drawings and specifications required

c. Requirements for tooling, jigs, fixtures and associated equipment.

d. Characteristics and tolerances

e. Procedure for controlling processes, cleaning, preservation and packaging operations as applicable.

f. Special conditions including environmental controls, cleanliness levels, handling of ESD sensitive devices, life sensitive parts, etc. as applicable.

g. Workmanship standards as applicable.

h. Specific inspection and/or test operations, if required.

i. Need for special handling equipment and/or protective devices.

j. Sign–off or stamping by manufacturing operator, inspector and authorized quality designee (if applicable)

k. Inclusion of all necessary configuration verification data.

l. Mandatory inspection points (if applicable)

m. Work Instruction revision level.

5.2 Process Specifications

Process Specifications are controlled by the Engineering organization and provide the detailed requirements for a process (i.e., adhesive application, painting, bonding, etc.). The specifications include accept/reject criteria as well as process limits (i.e., temperature ramp times, cure times, etc.). In some MMC locations, the Process Specification is augmented by a Manufacturing Standing Instruction that provides the detailed shop instructions (i.e., specific tools to use).

5.3 Test Procedures

Test procedures are written by Design Engineering with support from the Test Engineers. The test procedures define the test set up, sequence of tests, detailed test instructions, acceptance limits, environmental limits, etc. Where testing is to be performed using automated test equipment, the acceptance limits are incorporated into the test software and are verified as part of the acceptance testing of the test equipment which is performed prior to testing of flight hardware.

6 FABRICATION FLOW DIAGRAM FOR PRINTED WIRING BOARD ASSEMBLIES

The following flow diagram is a generic flow for fabrication of a printed wiring board. The flow diagrams for mass flow techniques for SMT designs will be developed in conjunction with the certification process required by the NHB and will be submitted to GSFC at a later date.

(This page intentionally left blank.)

Manufacturing Process Flow Diagram
Typical Board Assembly and Test

MARTIN MARIETTA

MARTIN MARIETTA ASTRO SPACE

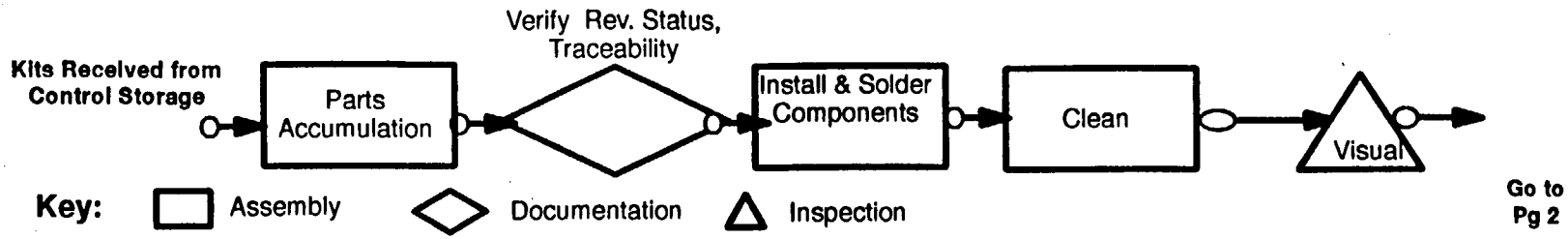

DOCUMENTATION	PL200XXXXXG1	20005397 PAI–334	FPR200XXXXXG1	FPR200XXXXXG1	FPR200XXXXXG1 200XXXXXG1	
EQUIP			As Required by Assembly Method	Conveyorized Cleaner	Microscope	
TOOLING/ FIXTURES			As Required by Assembly Method		Protective Handling Devices (PHD)	
FACILITIES	Assembly Area	Q.C. Station	Assembly Area	Assembly Area	Q.C. Station	
CRITICAL ISSUES						

Manufacturing Process Flow Diagram
Typical Board Assembly and Test (Page 2)

MARTIN MARIETTA

MARTIN MARIETTA ASTRO SPACE

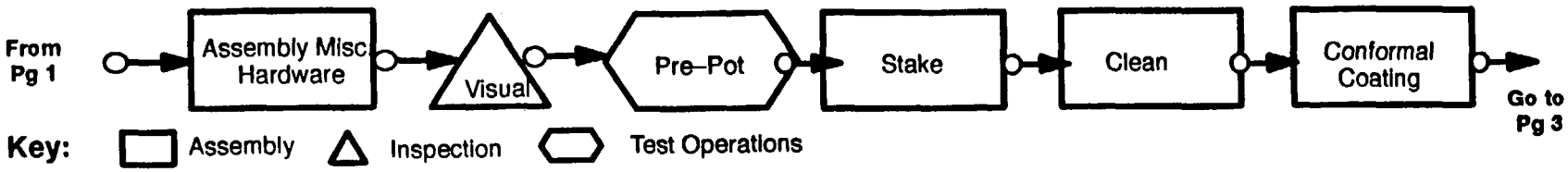

DOCUMENTATION	FPR200XXXXXG1	FPR200XXXXXG1	FPR200XXXXXG1	FPR200XXXXXG1	FPR200XXXXXG1	FPR200XXXXXG1
EQUIP			STE, Test Set–up, or ATE		Conveyorized Cleaner	Spray Booth
TOOLING/ FIXTURES	PHD	PHD	Board Fixture PHD	PHD	PHD	PHD
FACILITIES	Assembly Area	Q.C. Station	Test Area	Board Finish Area	Assembly Area	Board Finish Area
CRITICAL ISSUES						

Manufacturing Process Flow Diagram
Typical Board Assembly and Test (Page 3)

MARTIN MARIETTA

MARTIN MARIETTA ASTRO SPACE

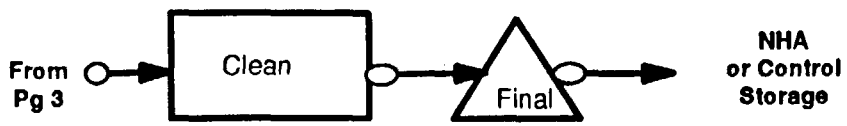

Key: Assembly Inspection

DOCUMENTATION	FPR200XXXXXG1	FPR200XXXXXG1 20005397				
EQUIP	Conveyorized Cleaner					
TOOLING/ FIXTURES	PHD	PHD				
FACILITIES	Assembly Area	Q.C. Station				
CRITICAL ISSUES						

(This page intentionally left blank.)

7 FABRICATION FLOW DIAGRAM FOR EOS COMPONENTS

The following flow diagram is a generic flow for fabrication of a typical component (black box).

Note: Customer mandatories will be inserted where directed.

(This page intentionally left blank.)

Manufacturing Process Flow Diagram
Typical Box Assembly and Test (Page 1)

MARTIN MARIETTA

MARTIN MARIETTA ASTRO SPACE

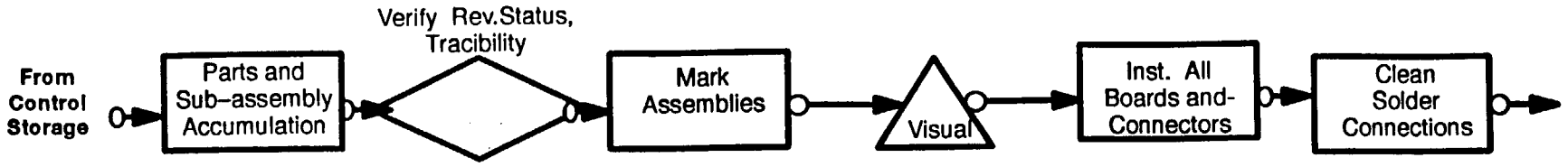

Key: Assembly Documentation Inspection

Go to Page 2

DOCUMENTATION	FPR2000XXXXG1 PL20000XXXXG1	FPR2000XXXXG1 20005397 PAI–334	FPR2000XXXXG1 2000XXXXG1 2280878	FPR2000XXXXG1 20005397	FPR2000XXXXG1 2000XXXXG1 WCL2000XXXXG1	FPR2000XXXXG1 2280883
EQUIP					Standard Work Station	
TOOLING/ FIXTURES	Protective Handling Devices (PHD)		Stencils PHD		PHD	PHD
FACILITIES	Assembly Area	Q.C. Station	Assembly Area	Q.C. Station	Assembly Area	Assembly Area
CRITICAL ISSUES						

DCC080393

20006047
30 July 1993

Manufacturing Process Flow Diagram
Typical Box Assembly and Test (Page 2)

MARTIN MARIETTA

MARTIN MARIETTA ASTRO SPACE

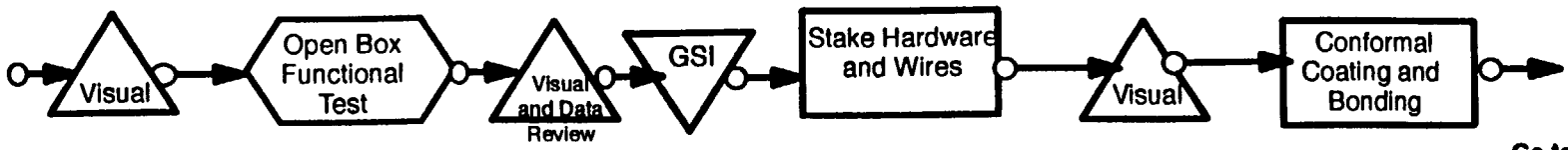

Key: Assembly · Test Operations · Inspection · Government Inspection

Go to Page 3

DOCUMENTATION	FPR2000XXXXG1 20005397	FPR2000XXXXG1 TP–2000XXXX	FPR2000XXXXG1 20005397	FPR2000XXXXG1 2000XXXXG1 2280875 2280878	FPR2000XXXXG1 20005397	FPR2000XXXXG 12000XXXXG1 2280875
EQUIP		STE, Test Set–Up, Harness				
TOOLING/ FIXTURES		Board Extender				
FACILITIES	Q.C. Station	Test Area	Q.C.Station– DPRO Station	Finish Area	Q.C. Station	Finish Area
CRITICAL ISSUES						

Manufacturing Process Flow Diagram TypicalBox Assembly and Test (Page 3)

MARTIN MARIETTA

MARTIN MARIETTA ASTRO SPACE

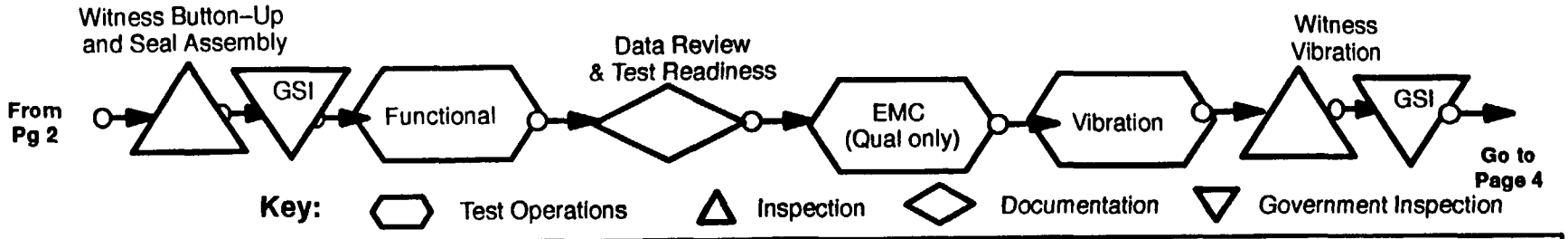

DOCUMENTATION	FPR2000XXXXG1 20005397	FPR2000XXXXG1 TP2000XXXX	FPR2000XXXXG1 20005397	FPR2000XXXXG1 TP-EMC2000XXXX	FPR2000XXXXG1 TP-VIB-2000XXXX	FPR2000XXXXG 20005397
EQUIP		Test Set-Up, STE, Harness, Thermal Chamber		EMC Screen Encloser, Test Set-Up, STE	Test Set-Up, STE, Harness, Shaker	
TOOLING/ FIXTURES					Vibration Plate	
FACILITIES	Assembly Area	Test Area	Q.C. Station	EMC Test Area	Environmental Test Area	Environmental Test Area
CRITICAL ISSUES						

Manufacturing Process Flow Diagram
Typical Box Assembly and Test (Page 4)

MARTIN MARIETTA

MARTIN MARIETTA ASTRO SPACE

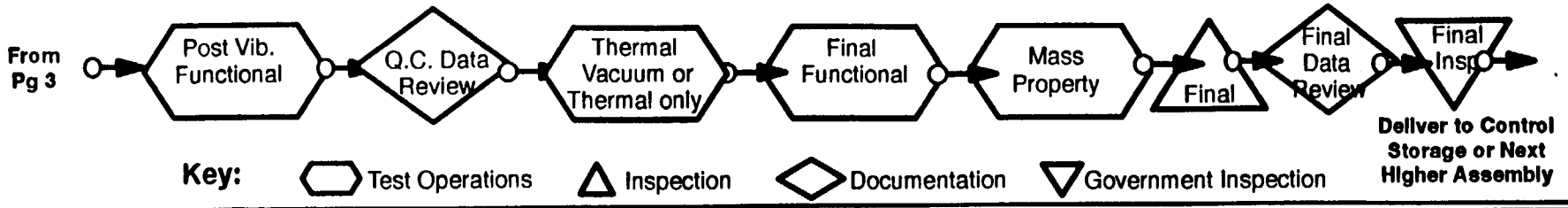

DOCUMENTATION	FPR2000XXXXG1 TP-2000XXXX	FPR2000XXXXG1 20005397	FPR2000XXXXG1 TP-TV2000XXXX	FPR2000XXXXG1 TP-2000XXXX	FPR2000XXXXG1 TP-2000XXXX	FPR2000XXXXG1 20005397	FPR2000XXXXG1 20005397
EQUIP	Test Set-Up, STE, Harness		T/V Chamber, STE/Special Harness	Test Set-Up, STE, Harness	Scale		
TOOLING/ FIXTURES			Special Plate				ESD Protection
FACILITIES	Test Area	Q.C. Station	Environmental Test Area	Test Area	Test Area	Q.C. Station	DPRO Station
CRITICAL ISSUES							

8 FABRICATION FLOW DIAGRAM FOR PRIMARY/SECONDARY STRUCTURE

The following flow diagram addresses the fabrication and test processes for the EOS–AM primary and secondary structure. A top level flow diagram provides an overview of the complete assembly process and is followed by lower level flow diagrams that provide the detailed flows for each operation.

The fabrication flow diagrams for honeycomb panels (aluminum and Gr/Ep) are also included in this section as is the fabrication process for Gr/Ep struts.

(This page intentionally left blank.)

Manufacturing Process Flow Plan
EOS–Primary/Secondary Structure

MARTIN MARIETTA

MARTIN MARIETTA ASTRO SPACE

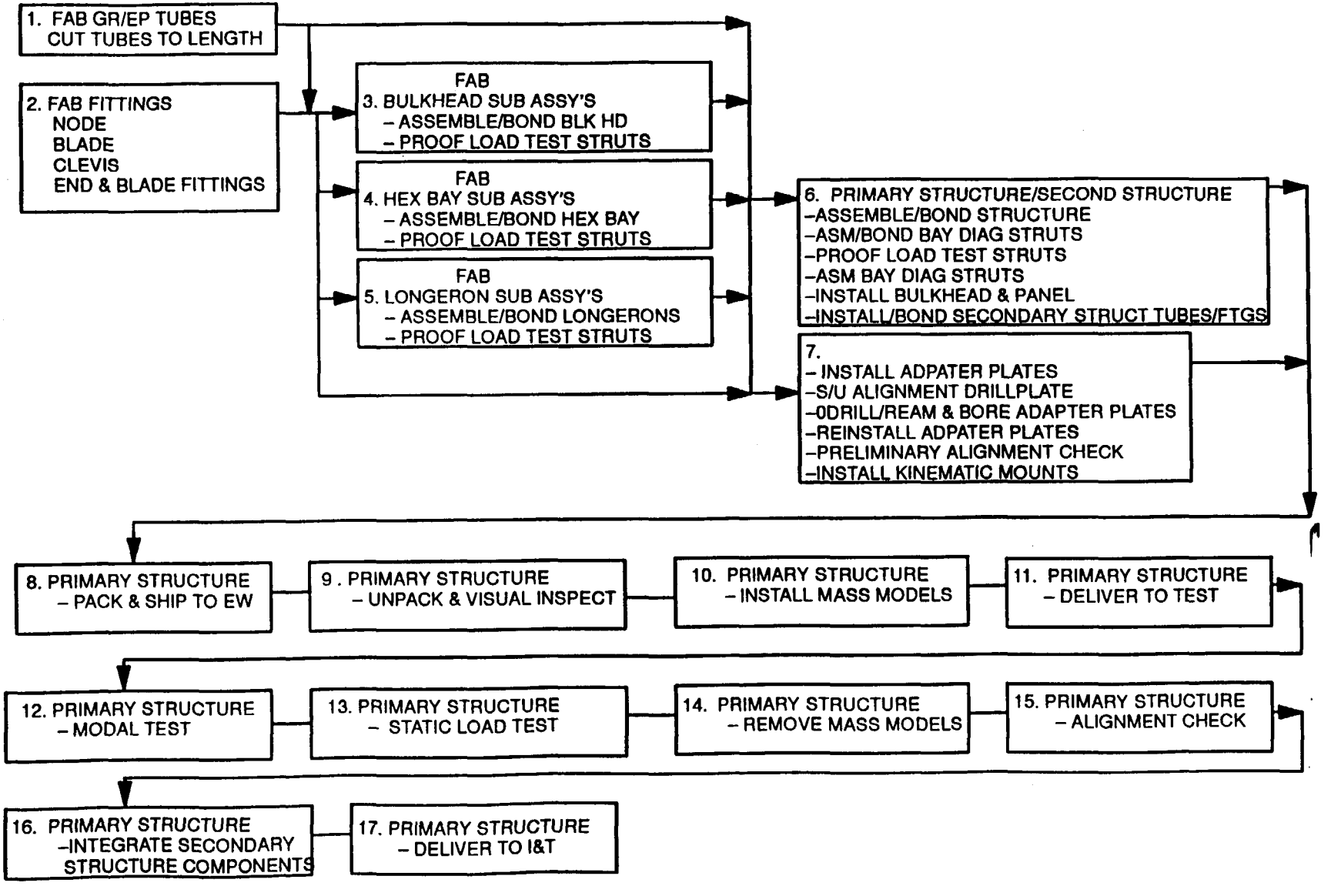

DCC080393

2000804 /
30 July 1993

Manufacturing Process Flow Diagram
EOS–Primary/Secondary Structure

MARTIN MARIETTA

MARTIN MARIETTA ASTRO SPACE

Go to
Pg 2

OPERATION	1. FAB GR/EP TUBE	2. FAB FITTINGS NODE BLADE CLEVIS	3. FAB BULKHEAD ASSEMBLY	4. FAB HEX BAYHEAD ASSEMBLY	5. FAB LONGERON ASSEMBLY	6. ASSEMBLE PRIMARY & SECONDARY STRUCTURE
DOCUMENTA-TION	ENG DWG . 23001386TY2 171A4950 MFG PLANNING	ENG DWG 47-293978 171A4950 MFG PLANNING	171A4500 171A4703 MSI 252929 MSI 252918 171A4950 MFG PLANNING	171A4500 171A4703 MSI 252929 MSI 252918 171A4950 MFG PLANNING	171A4500 171A4703 MSI 252929 MSI 252918 171A4950 MFG PLANNING	171A4500 171A4703 MSI 252929 MSI 252918 171A4950 MFG PLANNING
EQUIP	ROLLING TABLE	VARIOUS MAHCINES	1. ADHESIVE MIX MACHINE 2. INJECTION GUN 3. OVEN	1. ADHESIVE MIX MACHINE 2. INJECTION GUN 3. OVEN	1. ADHESIVE MIX MACHINE 2. INJECTION GUN 3. OVEN	1. ADHESIVE MIX MACHINE 2. INJECTION GUN 3. OVEN
TOOLING/ FIXTURES	1. MANDREL 2. EXPENDABLE BLADDERS		1. BULKHEAD ASSY FIX 2. BONDING COLLARS TOOL KIT 3. PROOF TEST FIX.	1. BULKHEAD ASSY FIX 2. BONDING COLLARS TOOL KIT 3. PROOF TEST FIX.	1. LONGERON ASSY FIX 2. BONDING COLLARS TOOL KIT 3. PROOF TEST FIX.	1. MAIN ASSY FIX 2. BONDING COLLARS TOOL KIT
FACILITIES	TEMPERATURE & HUMIDITY CONTROLLED ROOM		TEMPERATURE CONTROLLED AREA (VF) HIGH BAY	TEMPERATURE CONTROLLED AREA (VF) HIGH BAY	TEMPERATURE CONTROLLED AREA (VF) HIGH BAY	TEMPERATURE CONTROLLED AREA (VF) HIGH BAY
CRITICAL ISSUES						

Manufacturing Process Flow Diagram
EOS–Primary/Secondary Structure

MARTIN MARIETTA

MARTIN MARIETTA ASTRO SPACE

Go to Pg 3

OPERATION	7. INSTALL & ALIGN ADAPTER PLATES FOR KM'S	8. INSTALL MASS MODELS	9. DELIVER PRIMARY STRUCTURE TO TEST	10. MODAL TEST	11. STATIC LOAD TEST	12. REMOVE MASS MODELS
DOCUMENTA-TION	ENG DRAWINGS 47–293978 MFG PLANNING	ENG DRAWINGS MFG PLANNING	MFG PLANNING	TEST PROCEDURE MFG PLANNING	TEST PROCEDURE	MFG PLANNING
EQUIP	OPTICAL ALIGNMENT EQUIP. OVERHEAD CRANE	OVERHEAD CRANE				
TOOLING/ FIXTURES	DAF FIXTURES	SLINGS & HANDLING FIXTURES	SLINGS & HANDLING FIXTURES	TEST FIXTURE	TEST FIXTURE	SLINGS & HANDLING FIXTURES
FACILITIES	TEMPERATURE CONTROLLLED AREA (VF) HIGH BAY	TEMPERATURE CONTROLLLED AREA (VF) HIGH BAY		BLDG 300 VF	BLDG 300 VF	(VF) HIGH BAY BLDG 300 VF
CRITICAL ISSUES	CONTROL OF TEMPERATURE FOR DRILLING ALIGNMENT PLATES					

DCC080393

20008647
30 July 1993

Manufacturing Process Flow Diagram
EOS–Primary/Secondary Structure

MARTIN MARIETTA

MARTIN MARIETTA ASTRO SPACE

OPERATION	13. ALIGNMENT CHECK	14. PACK & SHIP TO EW	15. UNPACK & VISUALLY INSPECT	16. INTEGRATE SECONDARY STRUCTURE COMP.	17. DELIVER TO I&T	
DOCUMENTA-TION	I&T TEST PROCEDURE	PERMITS FOR TRANSPORT SHIPPING NOTICE	FPR	FPR	FPR	
EQUIP	OPTICAL ALIGNMENT EQUIP.	AIR RIDE TRUCK OVERHEAD CRANE				
TOOLING/ FIXTURES	DAF FIXTURES	SHIPPING CONTAINER				
FACILITIES	VF HIGH BAY BLDG 100	N/A			BAY #8 EW	
CRITICAL ISSUES						

Manufacturing Process Flow Plan
EOS–Alum. Skin Honeycomb Panels

MARTIN MARIETTA

MARTIN MARIETTA ASTRO SPACE

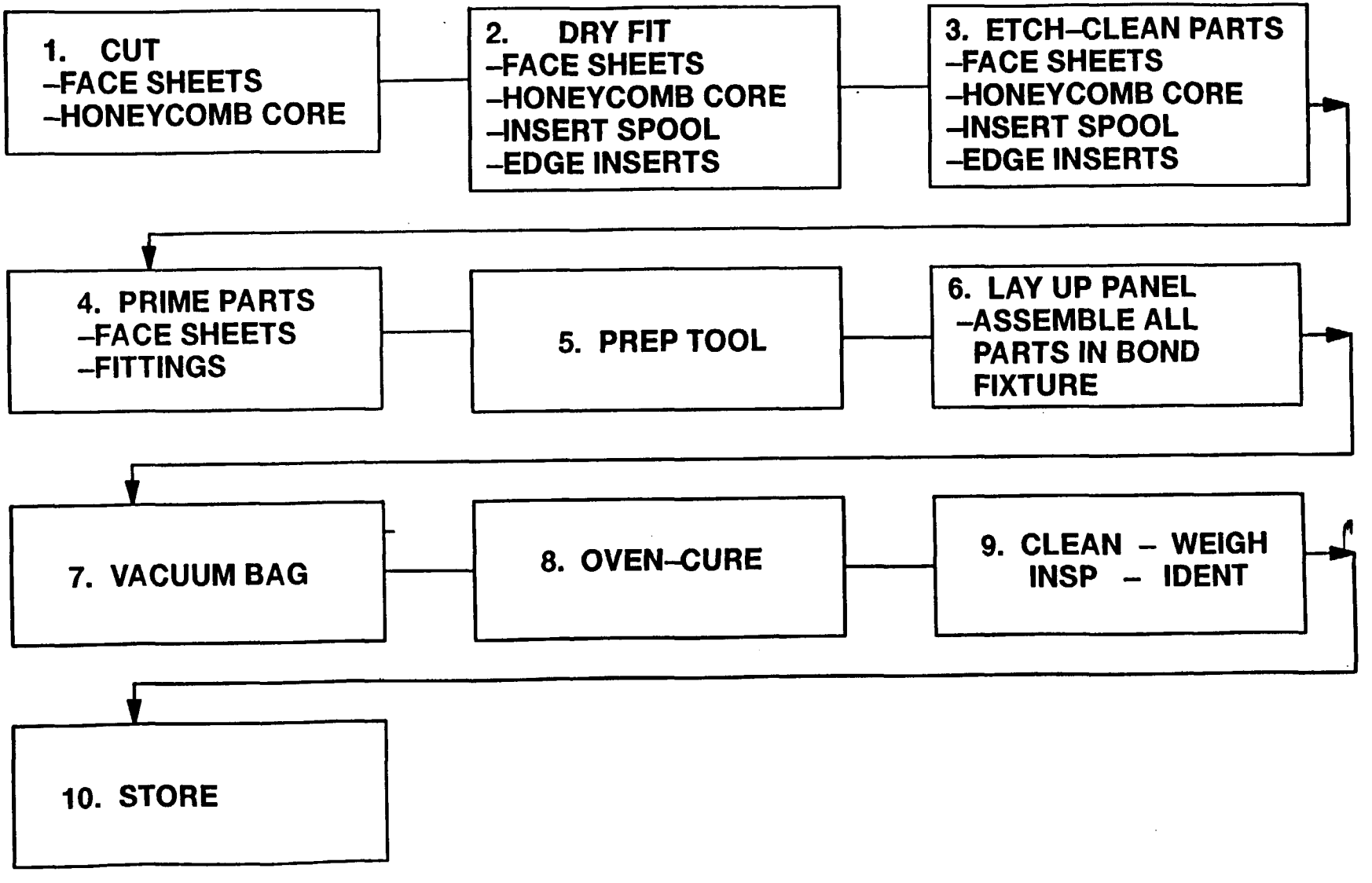

DCC080393

200086647
30 July 1993

Manufacturing Process Flow Diagram
EOS–Alum. Skin Honeycomb Panels

MARTIN MARIETTA

MARTIN MARIETTA ASTRO SPACE

Go to
Pg 2

OPERATION	1. CUT FACE SHEETS ADHESIVE CORE	2. DRY FIT PANEL ASSEMBLY	3. ETCH CLEAN ALL PANEL PARTS	4. PRIMER FACE SHEETS FITTINGS	5. PREP. TOOL	6. LAY UP PANEL
DOCUMENTA-TION	MFG. PLANNING 171A5055	MFG. PLANNING 171A5055	MFG. PLANNING 8030035	MFG. PLANNING 171A4926	MFG. PLANNING 171A5055	MFG. PLANNING 171A5055 MSI 253198
EQUIP	ROUTER & BITS BAND SAW WORK TABLES ULTRASONIC KNIFE X–ACTO KNIFE URATHANE CUTTING MAT		WORK TABLE	WORK TABLE		
TOOLING/ FIXTURES	HOLE CUTTERS DRILL ROUT TEM-PLATE PROFILE TEMPLATE	PANEL BOND FIX.			PANEL BOND FIXTURE	PANEL BOND FIXTURE
FACILITIES	VF PRE–ASSEMBLY					
CRITICAL ISSUES	NONE		BOND WITHIN (1) HR. OF CLEAN OR WRAP & BOND WITHIN 5 DAYS			

DCC080393

Manufacturing Process Flow Diagram
EOS–Alum. Skin Honeycomb Panels

MARTIN MARIETTA

MARTIN MARIETTA ASTRO SPACE

OPERATION	7. VACUUM BAG	8. OVEN CURE	9. CLEAN WEIGH INSP IDENT	10. STORE		
DOCUMENTA-TION	MFG. PLANNING 171A4763	MFG. PLANNING 171A5055	MFG. PLANNING 171A4912TY4 171A4900 532534CL7A			
EQUIP	VACUUM BAG					
TOOLING/ FIXTURES	OVER PANEL BOND FIXTURE	OVER PANEL BOND FIXTURE				
FACILITIES	VF PRE–ASSEMBLY					
CRITICAL ISSUES		QUALITY ASSURANCE REQUIREMENTS				

Manufacturing Process Flow Plan
EOS Graphite–Epoxy Honeycomb Panels

MARTIN MARIETTA

MARTIN MARIETTA ASTRO SPACE

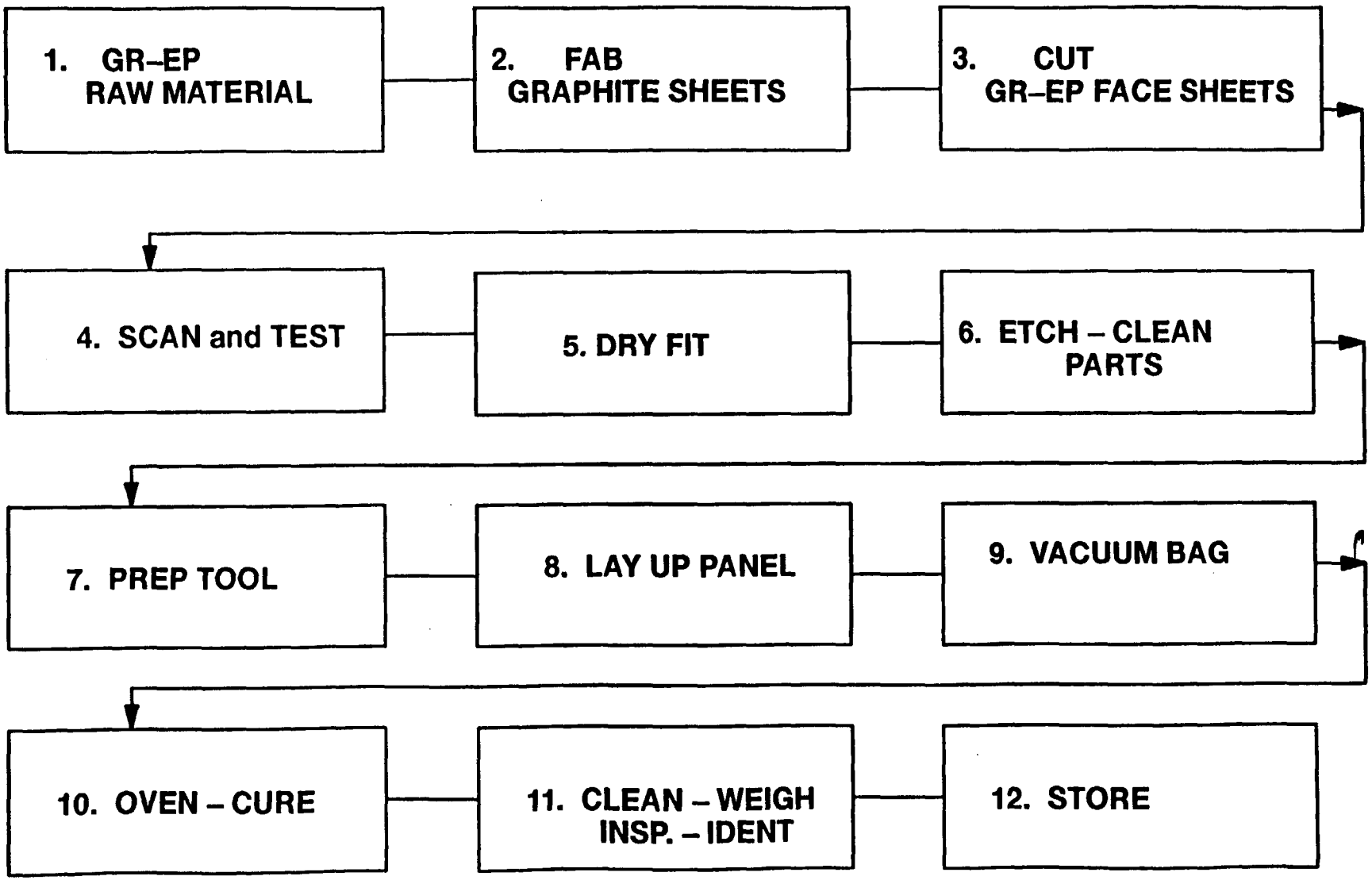

Manufacturing Process Flow Diagram
EOS–Graphite Panels

MARTIN MARIETTA

MARTIN MARIETTA ASTRO SPACE

Go to Pg 2

OPERATION	1. RAW MATERIALS	2. FAB GR/EP SHEETS	3. CUT FACE SHEETS ADHESIVE CORE	4. SCAN & TEST	5. DRY FIT ALL PANEL PARTS	6. CLEAN PREPARE PARTS
DOCUMENTA-TION		GRAPHITE SHEETS 171A5053 MFG. PLANNING	MFG. PLANNING 171A5053 SKINS CORE FILM FOAM ADHES	MFG. PLANNING 171A5053	MFG. PLANNING 171A5053	MFG. PLANNING 171A5053
EQUIP			WORK TABLE CUTTING MAT KNIVES ROUTER			WORK TABLE
TOOLING/ FIXTURES			HOLE CUTTERS DRILL ROUT TEMPLATE PROFILE TEMPLATE		PANEL BOND FIXTURE	
FACILITIES		VF PRE–ASSEMBLY	VF PRE–ASSEMBLY		VF PRE–ASSEMBLY	VF PRE–ASSEMBLY
CRITICAL ISSUES		NONE				BOND WITHIN (1) HR. OF CLEAN OR WRAP & BOND WITHIN 5 DAYS

DCC080393

20008647
30 July 1993

Manufacturing Process Flow Diagram
EOS Graphite Panels

MARTIN MARIETTA

MARTIN MARIETTA ASTRO SPACE

OPERATION	7. PREP TOOL	8. LAY UP PANEL	9. VACUUM BAG	10. OVEN BAKE	11. CLEAN WEIGN INSP IDENT.	12. STORE
DOCUMENTA-TION	MFG. PLANNING 171A5053	MFG. PLANNING 171A5053	MFG. PLANNING 171A5053	MFG. PLANNING 171A5053	MFG. PLANNING 171A5053	
EQUIP			VACUUM BAG		WORK TABLE	
TOOLING/ FIXTURES	PANEL BOND FIXTURE	PANEL BOND FIXTURE	OVER PANEL BOND FIXTURE	PANEL BOND FIXTURE		
FACILITIES	VF PRE–ASSEMBLY	VF PRE–ASSEMBLY				
CRITICAL ISSUES						

Manufacturing Process Flow Plan
EOS Strut Fabrication Flow

MARTIN MARIETTA

MARTIN MARIETTA ASTRO SPACE

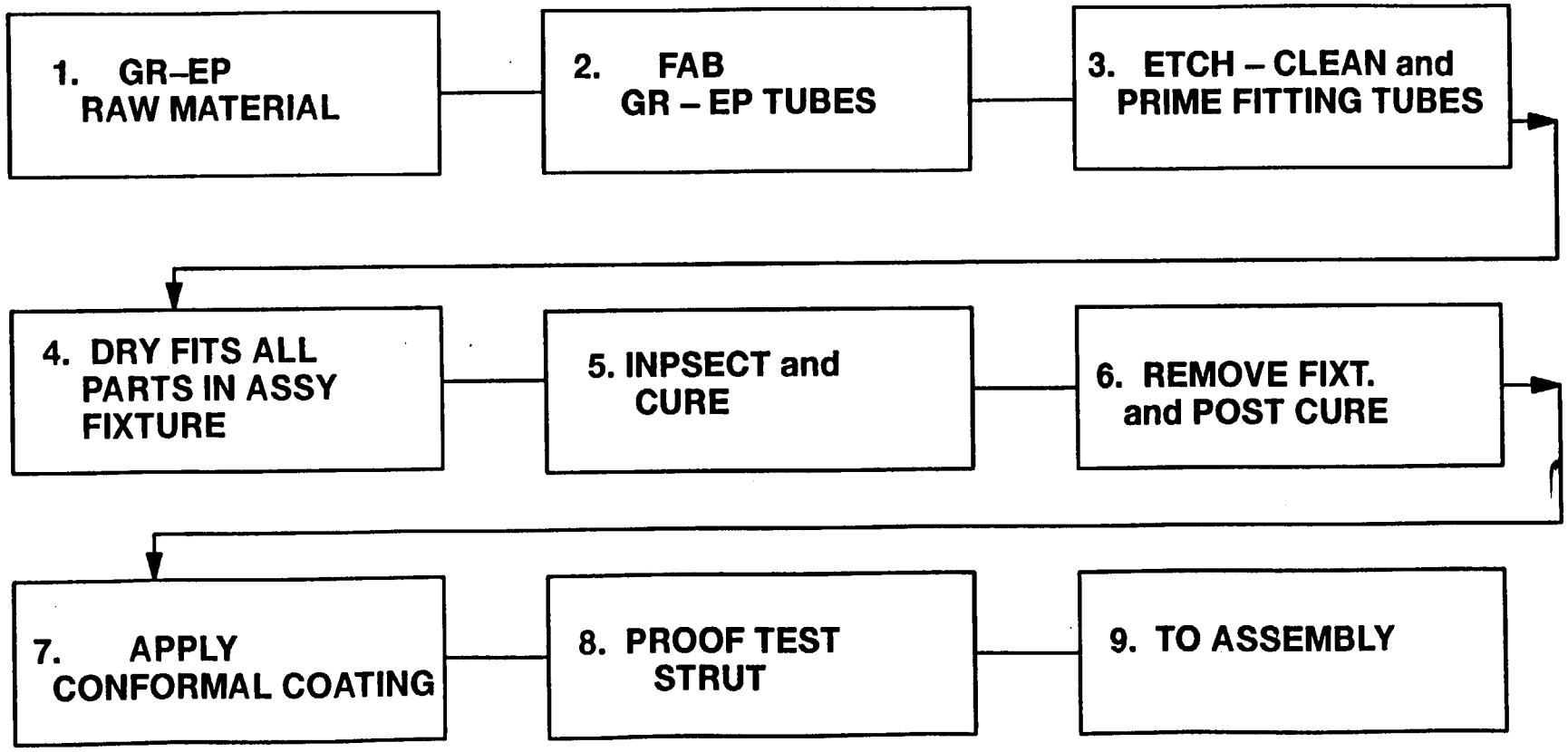

Manufacturing Process Flow Diagram
EOS Strut Fabrication

MARTIN MARIETTA

MARTIN MARIETTA ASTRO SPACE

Go to
Pg 2

OPERATION	1. MATERIAL GR/EP SHEET	2. FAB TUBES	3. ETCH CLEAN PRIME	4. DRY FIT	5. INSPECT AND CURE	6. REMOVE FIXT AND CURE
DOCUMENTA-TION	MFG. PLANNING 171A4746 161A4702	MFG. PLANNING 23001386TY2	MFG. PLANNING 171A4500 171A4926		MFG. PLANNING 171A4951	
EQUIP			WORK TABLE			OVEN
TOOLING/ FIXTURES		ASSEMBLY FIXTURE		ASSEMBLY FIXTURE	ASSEMBLY FIXTURE	
FACILITIES	VF					
CRITICAL ISSUES						

Manufacturing Process Flow Diagram
EOS Strut Fabrication

MARTIN MARIETTA

MARTIN MARIETTA ASTRO SPACE

OPERATION	7. APPLY COATING	8. PROOF TEST STRUT	9. STORE OR SHIP TO ASSY			
DOCUMENTA-TION	MFG. PLANNING 171A4627	MFG. PLANNING 171A4950				
EQUIP	WORK TABLE					
TOOLING/ FIXTURES						
FACILITIES						
CRITICAL ISSUES						

DCC080393

ZUUUBU4/
30 July 1993

(This page intentionally left blank.)

Manufacturing Process Flow Diagram (Page 4)

MARTIN MARIETTA

MARTIN MARIETTA ASTRO SPACE

18: WELD TUBES COLD PLATE → 19: COMPLETE WELDS COLD PLATE → Go to Pg 2 Step 9

DOCUMENTATION	MFG PLANNING PROCESS STD. 2280757 MIL STD-2219 S30009	MFG PLANNING PROCESS STD. 2280757 MIL STD-2219 S30009				
EQUIP	ORBITAL WELDING HEAD	ORBITAL WELDING HEAD				
TOOLING/ FIXTURES	SHOP AID WELD FIXTURE SA2	N/A				
FACILITIES	WELD SHOP VF	WELD SHOP VF				
CRITICAL ISSUES	N/A	N/A				

DCC080393

20008647
30 July 1993

9 FABRICATION FLOW DIAGRAM FOR THERMAL SUBSYSTEM

The following flow diagram addresses the fabrication and test processes EDM CPHTS system. The lesson's learned from the EDM fabrication will be included in an updated flow diagram for the flight fabrication at a later date. A top level flow diagram provides an overview of the complete assembly process and is followed by lower level flow diagrams that provide the detailed flows for each operation.

Manufacturing Process Flow Diagram (Page 2)

MARTIN MARIETTA

MARTIN MARIETTA ASTRO SPACE

FROM PAGE 7 STEP 22

FROM PAGE 4 STEP 19

	7	8	9	12	11	12
	BOND SUB-COOLING LINES	INSTALL RADIATOR PANEL ASSY TO MAGE	INSTALL COLD PLATE TO MAGE	WELD TUBES RADIATOR TO COLD PLATE	PRESSURE LEAK TEST	PACK AND SHIP
DOCUMENTATION	MFG PLANNING S30009	MFG PLANNING S30009	MFG PLANNING S30009	MFG PLANNING PROCESS STD. 2280757 MIL-STD-2219 S30009	MFG PLANNING TEST PROCEDURE TBD	MFG PLANNING
EQUIP	N/A	TORQUE WRENCH	TORQUE WRENCH	ORBITAL WELD HEAD	LEAK TEST CHAMBER	FORK LIFT
TOOLING/ FIXTURES	N/A	N/A	N/A	N/A	N/A	SHIPPING CONTAINER
FACILITIES	MECHANICAL SHOPS VF	MECHANICAL SHOPS VF	MECHANICAL SHOPS VF	WELD SHOP VF	TEST AREA VF	SHIPPING & RECEIVING VF
CRITICAL ISSUES	USE SUPPORT STRIP ON PANEL FACE IN AREA OF CLAMPING DURING CURE	N/A	N/A	N/A	WHEN PRESSURIZING SYSTEM ALL VALUES MUST BE USED TO EQUALIZE PRESSURE TO 2.0 PSI	N/A

Go to Pg 3

DCC080393

20008647
30 July 1993

(This page intentionally left blank.)

EOS CPHTS EDM Phase I Assembly and Build Plan

MARTIN MARIETTA

MARTIN MARIETTA ASTRO SPACE

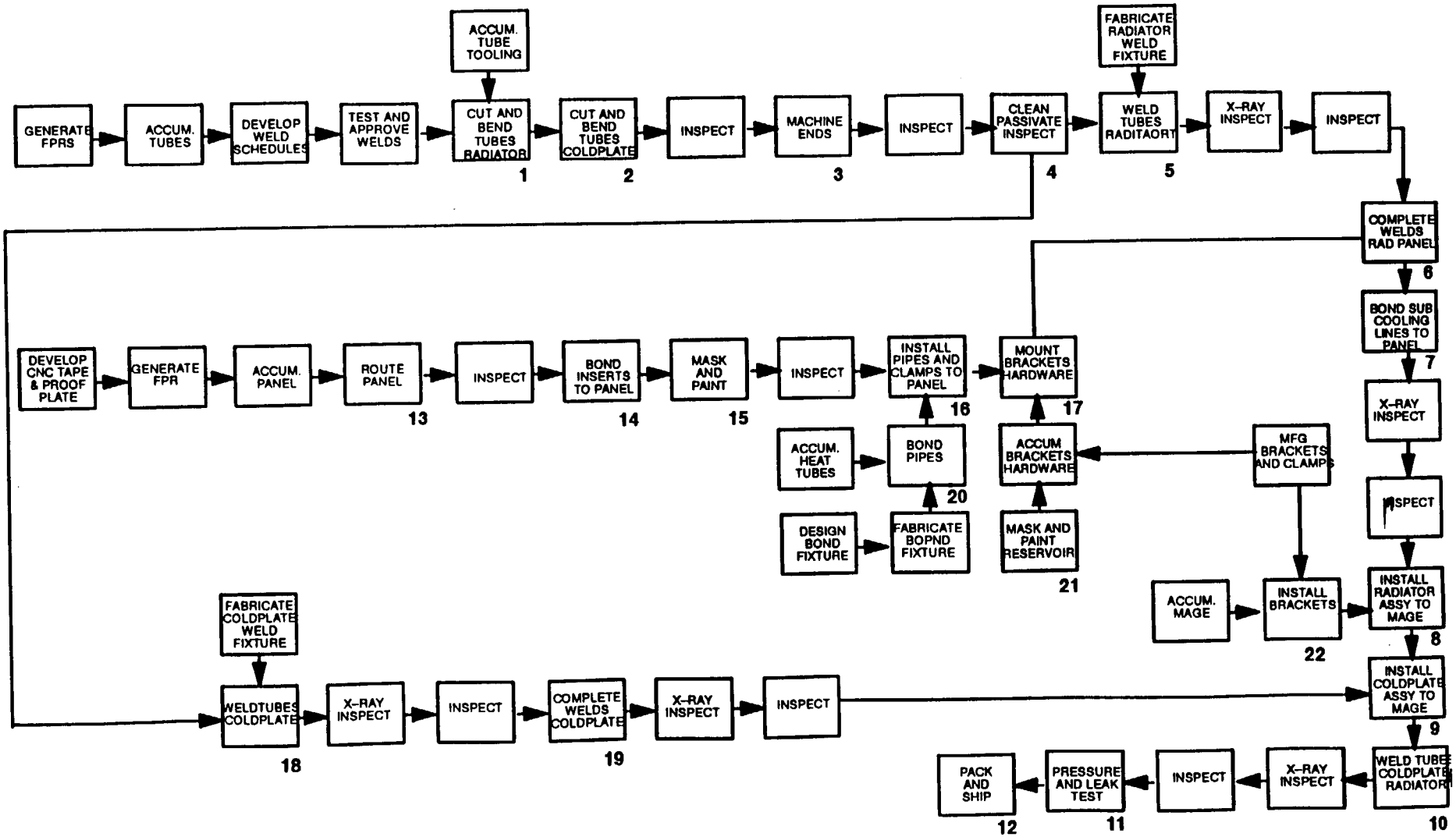

Manufacturing Process Flow Diagram (Page 1)

MARTIN MARIETTA

MARTIN MARIETTA ASTRO SPACE

FROM PAGE 3 STEP 17

1 CUT AND BEND TUBES RADIATOR → 2 CUT AND BEND TUBES COLD PLATE → 3 MACHINE TUBE ENDS → 4 CLEAN AND PASSIVATE → 5 WELD TUBES RADIATOR → 6 COMPLETE WELDS RADIATOR

Go to Pg 2

	1	2	3	4	5	6
DOCUMENTATION	MFG PLANNING BEND TABLES 20039972 S30009	MFG PLANNING BEND TABLES 20039972 S30009	MFG PLANNING PROCESS STD. 2280757 S30009	MFG PLANNING SPECS 2280772, 2280773 S30009	MFG PLANNING PROCESS STD. 2280757 MIL-STD-2219 S30009	MFG PLANNING PROCESS STD 2280757 MIL-STD-2219 S30009
EQUIP	MANUAL TUBE BENDER	MANUAL TUBE BENDER	MILLING MACHINE	CLEANING TANK PASSIVATION TANKS	ORBITAL WELDING HEAD	ORBITAL WELDING HEAD
TOOLING/ FIXTURES	STANDARD BEND DIES	STANDARD BEND DIES	STD "V" JAW VISE	STD HOLDING RACKS	SHOP AID WELD FIXTURES SA1	N/A
FACILITIES	MECHANICAL SHOPS VF	MECHANICAL SHOPS VF	MECHANICAL SHOPS VF	MATERIAL FINISHING SHOP VF	WELD SHOP VF	WELD SHOP VF
CRITICAL ISSUES	N/A	N/A	USE CARE WHEN CLAMPING TUBING	N/A	N/A	N/A

Manufacturing Process Flow Diagram (Page 2)

MARTIN MARIETTA

MARTIN MARIETTA ASTRO SPACE

FROM PAGE 7 STEP 22

FROM PAGE 4 STEP 19

	7	8	9	12	11	12
	BOND SUB-COOLING LINES	INSTALL RADIATOR PANEL ASSY TO MAGE	INSTALL COLD PLATE TO MAGE	WELD TUBES RADIATOR TO COLD PLATE	PRESSURE LEAK TEST	PACK AND SHIP
DOCUMENTATION	MFG PLANNING S30009	MFG PLANNING S30009	MFG PLANNING S30009	MFG PLANNING PROCESS STD. 2280757 MIL-STD-2219 S30009	MFG PLANNING TEST PROCEDURE TBD	MFG PLANNING
EQUIP	N/A	TORQUE WRENCH	TORQUE WRENCH	ORBITAL WELD HEAD	LEAK TEST CHAMBER	FORK LIFT
TOOLING/ FIXTURES	N/A	N/A	N/A	N/A	N/A	SHIPPING CONTAINER
FACILITIES	MECHANICAL SHOPS VF	MECHANICAL SHOPS VF	MECHANICAL SHOPS VF	WELD SHOP VF	TEST AREA VF	SHIPPING & RECEIVING VF
CRITICAL ISSUES	USE SUPPORT STRIP ON PANEL FACE IN AREA OF CLAMPING DURING CURE	N/A	N/A	N/A	WHEN PRESSURIZING SYSTEM ALL VALUES MUST BE USED TO EQUALIZE PRESSURE TO 2.0 PSI	N/A

Go to Pg 3

Manufacturing Process Flow Diagram (Page 3)

MARTIN MARIETTA

MARTIN MARIETTA ASTRO SPACE

FROM PAGE 5 STEP 20

PAGE 6 STEP 21

13 ROUTE PANEL → 14 BOND INSERTS → 15 MASK AND PAINT → 16 INSTALL PIPES AND CLAMPS TO PANEL → 17 MOUNT BRACKETS TO RADIATOR PANEL

Go to Pg 1 Step 6

DOCUMENTATION	MFG PLANNING S30009	MFG PLANNING PROCESS SPEC. 2280785 S30009	MFG PLANNING PROCESS SPEC. 171A4674	MFG PLANNING	MFG PLANNING	
EQUIP	C.N.C. ROUTER	N/A	SPRAY PAINT BOOTH	TORQUE WRENCH	TORQUE WRENCH	
TOOLING/ FIXTURES	C.N.C TRYOUT TEMPLATE	N/A	N/A	N/A	N/A	
FACILITIES	MECHANICAL SHOPS VF	MECHANICAL SHOPS VF	PAINT SHOPS VF	MECHANICAL SHOPS VF	MECHANICAL SHOPS VF	
CRITICAL ISSUES	N/A	N/A	N/A			

Manufacturing Process Flow Diagram (Page 4)

MARTIN MARIETTA

MARTIN MARIETTA ASTRO SPACE

18: WELD TUBES COLD PLATE → 19: COMPLETE WELDS COLD PLATE → Go to Pg 2 Step 9

DOCUMENTATION	MFG PLANNING PROCESS STD. 2280757 MIL STD-2219 S30009	MFG PLANNING PROCESS STD. 2280757 MIL STD-2219 S30009				
EQUIP	ORBITAL WELDING HEAD	ORBITAL WELDING HEAD				
TOOLING/ FIXTURES	SHOP AID WELD FIXTURE SA2	N/A				
FACILITIES	WELD SHOP VF	WELD SHOP VF				
CRITICAL ISSUES	N/A	N/A				

DCC080393

20008647
30 July 1993

Manufacturing Process Flow Diagram (Page 5)

MARTIN MARIETTA

MARTIN MARIETTA ASTRO SPACE

20

BOND HEAT PIPES

Go to Pg 3 Step 16

DOCUMENTATION	MFG PLANNING					
EQUIP	N/A					
TOOLING/ FIXTURES	BOND FIXTURE 20039972 BF1					
FACILITIES	MECHANICAL SHOPS VF					
CRITICAL ISSUES	N/A					

Manufacturing Process Flow Diagram (Page 6)

MARTIN MARIETTA

MARTIN MARIETTA ASTRO SPACE

21

MASK AND PAINT RESERVOIR

Go to Pg 3 Step 17

DOCUMENTATION	MFG PLANNING PROCESS SPEC 171A4674					
EQUIP	SPRAY PAINT BOOTH					
TOOLING/ FIXTURES	N/A					
FACILITIES	PAINT SHOP VF					
CRITICAL ISSUES	N/A					

Manufacturing Process Flow Diagram (Page 7)

MARTIN MARIETTA

MARTIN MARIETTA ASTRO SPACE

22

INSTALL BRACKETS TO MAGE →

Go to Pg 2 Step 8

DOCUMENTATION	MFG PLANNING					
EQUIP	TORQUE WRENCH					
TOOLING/ FIXTURES	N/A					
FACILITIES	MECHANICAL SHOPS VF					
CRITICAL ISSUES	N/A					