3724

CONTRACT NAS5-32500

Earth Observing System

EOS–AM SPACECRAFT PDR DATA PACKAGE

Package 5

Volume I of II

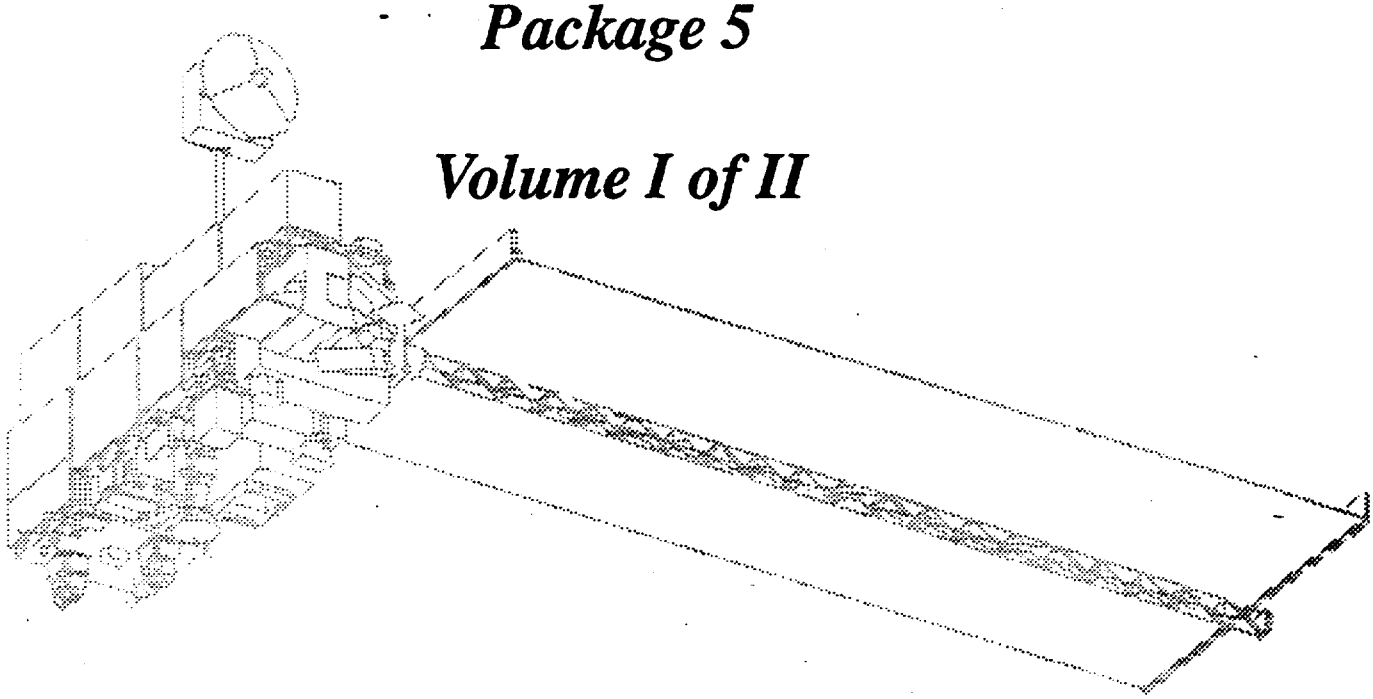

30 August 1993

(Preliminary) Contamination Analysis for EOS–AM Spacecraft (SEP–116)

20008651
30 August 1993

(Preliminary) Contamination Analysis for EOS–AM Spacecraft (SEP–116)

Prepared under:
Contract NAS5–32500
NASA Goddard Space Flight Center
Greenbelt, Maryland 20771

Prepared by:
Martin Marietta Corporation
Astro Space
P.O. Box 800
Princeton, New Jersey 08543–0800

DCC082693

(This page intentionally left blank.)

REVISION LOG

This log identifies those portions of this document which have been revised since the original issue. Revised portions of each page, for the current revision only, are identified by marginal striping.

Revision	Paragraph Number(s) Affected	Rev. Date	Approval
Preliminary		08/26/93	CC

(This page intentionally left blank.)

TABLE OF CONTENTS

SECTION / PARAGRAPH	TITLE	PAGE
1	INTRODUCTION	1
2	CONTAMINATION BUDGET	3
2.1	Spacecraft Contamination–Sensitive Surfaces	3
2.2	Budget	3
3	CONTAMINATION SOURCES	11
3.1	Materials Outgassing Requirements	11
3.2	Control of Spacecraft Venting	11
3.3	Assessment of Spacecraft Plume Contamination	11
3.4	Other Contamination Sources	12
4	ASSESSMENT OF MOLECULAR/PARTICULATE CONTAMINATION DEPOSITS AT SENSITIVE LOCATIONS	15
4.1	Ground Operations (Martin Marietta Astro Space and Launch Site)	15
4.2	Launch through Orbit Insertion	18
4.3	On–Orbit Mission	21
5	CONTAMINATION EFFECTS	29
6	CONCLUSION AND RECOMMENDATIONS	31
7	REFERENCES	33

APPENDIX I

10	LAUNCH CONTAMINATION ASSESSMENT	35

LIST OF FIGURES

FIGURE	TITLE	PAGE
1	EOS–AM Spacecraft On–Orbit Configuration	4
2	EOS–AM Spacecraft General Arrangement (Page 1 of 4)	5
3	EOS–AM Propulsion System – Current	13
4	EOS–AM Spacecraft Integration Flow	19
5	EOS–AM Spacecraft Test Flow	20
6	Contamination Loading of Surfaces by Outgassing of OGO–6 Under Various Environmental Conditions	22
7	NOAA–C CMI Sensor Data	23

LIST OF TABLES

TABLE	TITLE	PAGE
I	Types of Contamination Analyzed for the EOS–AM Spacecraft	2
II	EOS–AM External Surface Cleanliness Level Goals – Preliminary	9
III	Relationship Between Particle Weights and Cleanliness Class	10
IV	EOS–AM Spacecraft Bus Surfaces in Class 10K Clean Room	16
V	EOS–AM Instrument Surfaces in Class 10K Clean Room	17
VI	Launch Site Contamination Analysis for EOS–AM Spacecraft – Class 100K PLF	21
VII	Launch Site Contamination Analysis for EOS–AM Spacecraft – Class 10K PLF	21
VIII	NOAA–7 TQCM Flight Data	24
IX	Spacecraft Materials Outgassing	25
X	Modeling Equations for the Analysis of Return Flux	26
XI	Data Used in Return Flux Analysis	27
XII	Return Flux Deposition Analysis for EOS–AM	27
XIII	Contamination to EOS–AM Critical Surfaces from Launch through Completion of On–Orbit Mission	30
XIV	Contamination Events Analyzed by Martin Marietta for Titan IV Launch	35
XV	Martin Marietta's Predicted Contamination Levels for UES and Titan IV Sources	36
XVI	Predicted Contamination Levels for UES and Titan IV Sources	36
XVII	Potential Atlas II Centaur Contamination Sources Analyzed	37
XVIII	Baseline DSCS III Deposition Predictions	38
XIX	GDSS's Predicted Contamination Levels for Atlas II Launch of DSCS III	39

(This page intentionally left blank.)

1 INTRODUCTION

This report summarizes the approach and assumptions used in performing preliminary contamination source and effects analysis for the EOS–AM spacecraft. Results from spacecraft plume, ground processing and launch/ascent contamination analyses are also summarized.

Spacecraft contamination is generally divided into two classes, molecular and particulate contamination. Molecular contamination includes materials which condense or are transferred onto a surface from the surrounding environment or which "creep" over a surface as a thin film. In general, molecular contaminants are described as an approximately uniform film over the contaminated area. Molecular films can be described quantitatively in terms of thickness or weight per unit area. Particulate contamination consists of discrete particles. It can be described quantitatively by the number of particles per unit area in various size ranges or by weight.

Contamination is generally of most concern for optical components including detectors, sensors, solar arrays, etc. and thermal control surfaces. In both cases it is a change in optical characteristics which is important. For thermal control surfaces, changes in reflectance or absorptance result in a change in the energy absorbed by the surface and thus causing a change in the thermal balance of the surface. Change in solar absorptance, α, is the most prominent effect noted. Emittance, ε, of the surface is not normally affected. For a thermal radiator coating such as silvered Teflon, typically a 100 angstrom thick molecular film (equals about 1.0 mg/ft^2) or a MIL–STD–1246 level 850 particulate accumulation will cause a change in α, $\Delta\alpha$, = 0.01 on a low α surface.

Contamination of optical surfaces may affect the transmittance or reflectance of optical surfaces and also cause scattering. Loss in transmittance or reflectance is usually most noticeable in the ultraviolet and short wavelength visible portions of the spectrum. Polymerization of molecular films by ultraviolet light is a particular hazard because it stabilizes and darkens the deposited contaminant which would otherwise gradually evaporate back off the surface. Molecular contaminants may also have absorption bands in the infrared. This could result in reduced sensitivity of measurement for certain atmospheric species. Scattering is measured in terms of BRDF (Bidirectional Reflectance Distribution Function). Particulates and molecular films both cause increases in scattering.

Molecules and particulates in the field of view (FOV) of an instrument can be detrimental. An additional effect of contamination can be absorption or scattering in the field of view of an optical instrument. This can result in a false signal in an instrument designed to measure atmospheric constituents since it is difficult to distinguish between molecules in the atmosphere and those in the contamination cloud surrounding the Spacecraft.

In summary, the presence of contaminants, either molecular or particulate, deposited on sensor surfaces or floating in the field of view, can degrade the performance in several ways: scattering of stray light, false targeting, defocussing of the target image, and signal attenuation.

The contamination analysis performed defined the allowable contamination levels along with modifications so that the design and operation of the Spacecraft is compatible with the requirements. In addition, the analysis indicates the need for mission planning to avoid contamination effects. Table I summarizes the types of contamination analyzed for the EOS–AM Spacecraft.

EOS–AM contamination–sensitive surfaces are identified in Section 2 below. Also, a preliminary contamination budget developed for the EOS critical surfaces is shown in this section.

In Section 3, materials used on the EOS–AM spacecraft are reviewed specifically for outgassing characteristics. Special consideration is given to the control of venting (location/orientation) from the EOS–AM Spacecraft bus, MLI (multi–layer insulation) blankets, and other components and examination of other potential contamination sources such as mechanisms and pyro's. Also, a preliminary assessment of potential contamination from spacecraft thruster firings by the all–hydrazine (monopropellant) system is presented.

Contamination potential during the ground operations and the EOS–AM flight segment from launch through completion of orbital mission is examined in Section 4. Contamination effects on the EOS critical surfaces are described in Section 5. Conclusion and Recommendations are presented in Section 6.

Table I. Types of Contamination Analyzed for the EOS–AM Spacecraft

Type of Contamination	Remarks	Section
Ground Processing		
– Particulates	– Determined by facility design and activities	4.1
– Nonvolatile Residue	– Mostly organic compounds: lubricants, outgassing products, people–induced contamination, etc.	4.1
Launch/Ascent		
– Particulates	– Redistribution of particles present from ground processing	4.2
– Nonvolatile Residue	– Surface layer outgassing	4.2
Transfer Orbit/Deployment		
– Propulsion Sources	– Plume species identified as per thruster system	4.2
– Material Outgassing	– Short–term outgassing of materials	4.2
On–Orbit Lifetime		
– Propulsion Sources	– Plume species identified as per thruster system	3.3, Appendix 1
– Material Outgassing	– Long–term outgassing of materials transferred from surrounding environment by both direct and return flux	3.2, 3.4, 4.3

2 CONTAMINATION BUDGET

2.1 Spacecraft Contamination–Sensitive Surfaces

The contamination–sensitive surfaces identified for the EOS–AM Spacecraft are as follows:

a. ASTER (SWIR, TIR, VSR) – optical apertures

b. CERES (2) – sensor (nadir) and solar view apertures

c. MISR – aperture (nadir)

d. MODIS – nadir, space view and solar apertures

e. MOPITT – nadir and +Y apertures

f. Attitude control sensors (star trackers, earth sensors, sun sensors)

g. Solar array (cell side)

h. Thermal radiators (Spacecraft Bus, instruments)

The on–orbit configuration of the EOS–AM Spacecraft is depicted in Figure 1. Figure 2 shows the instruments, attitude control sensors, and thermal radiators on the Spacecraft Bus. Detailed contamination information on the EOS–AM instruments is listed in Appendix 1 of Ref. 1.

2.2 Budget

Contamination occurs through all phases of Spacecraft life starting with component manufacture and continuing until end of mission. However, since contamination sources vary in different phases, contamination control goals must be set for each phase. For planning purposes these phases are identified as completion of component manufacture or receipt at Martin Marietta Astro Space (Astro Space), integration and test at Astro Space, launch site integration, launch/deployment, and finally, the on–orbit mission. An allowable contamination level or budget can be set for the completion of each phase based upon the environmental controls, protective measures, cleanability, etc., during each phase. The acceptable degradation level by end of mission sets the maximum total contamination level.

A preliminary contamination budget shown in Table II for EOS–AM surfaces is based on requirement of the Spacecraft PAR that external surfaces of the EOS–AM Spacecraft must be maintained at a cleanliness level of 600A or better. Table III (Table IV of Ref. 1) was used to convert MIL–STD–1246 particulate level to mg/ft^2 as shown in Table II, Part B. Assumptions used to derive Tables II (Part A and B) are as follows:

a. Delivery to Astro Space – PAR requirement

b. Delivery to launch site – PAR requirement

c. After orbit insertion – DSCS analyses (Titan, Atlas)

d. End of life – Astro Space scientific programs

The following analyses will examine measures necessary to maintain the budget.

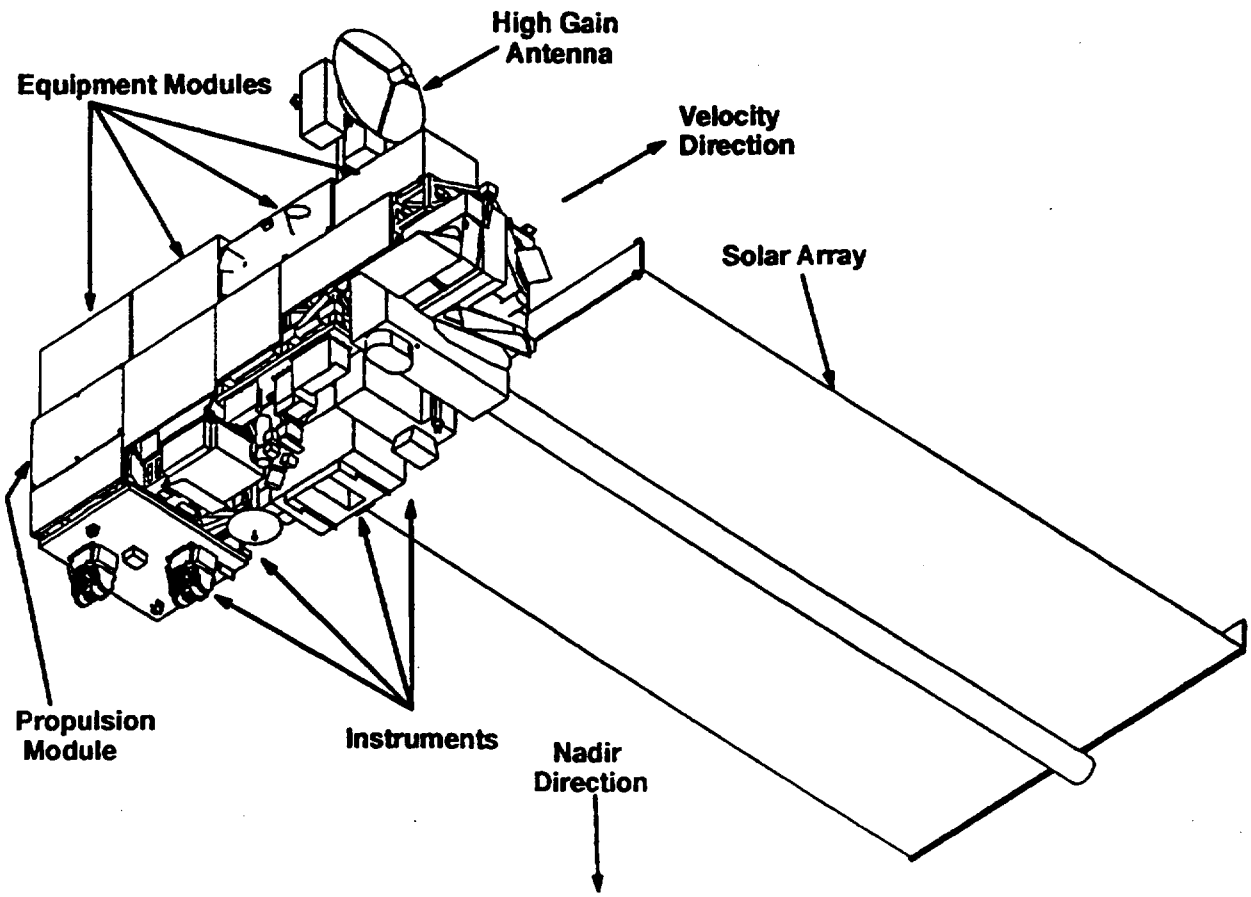

Figure 1. EOS–AM Spacecraft On–Orbit Configuration

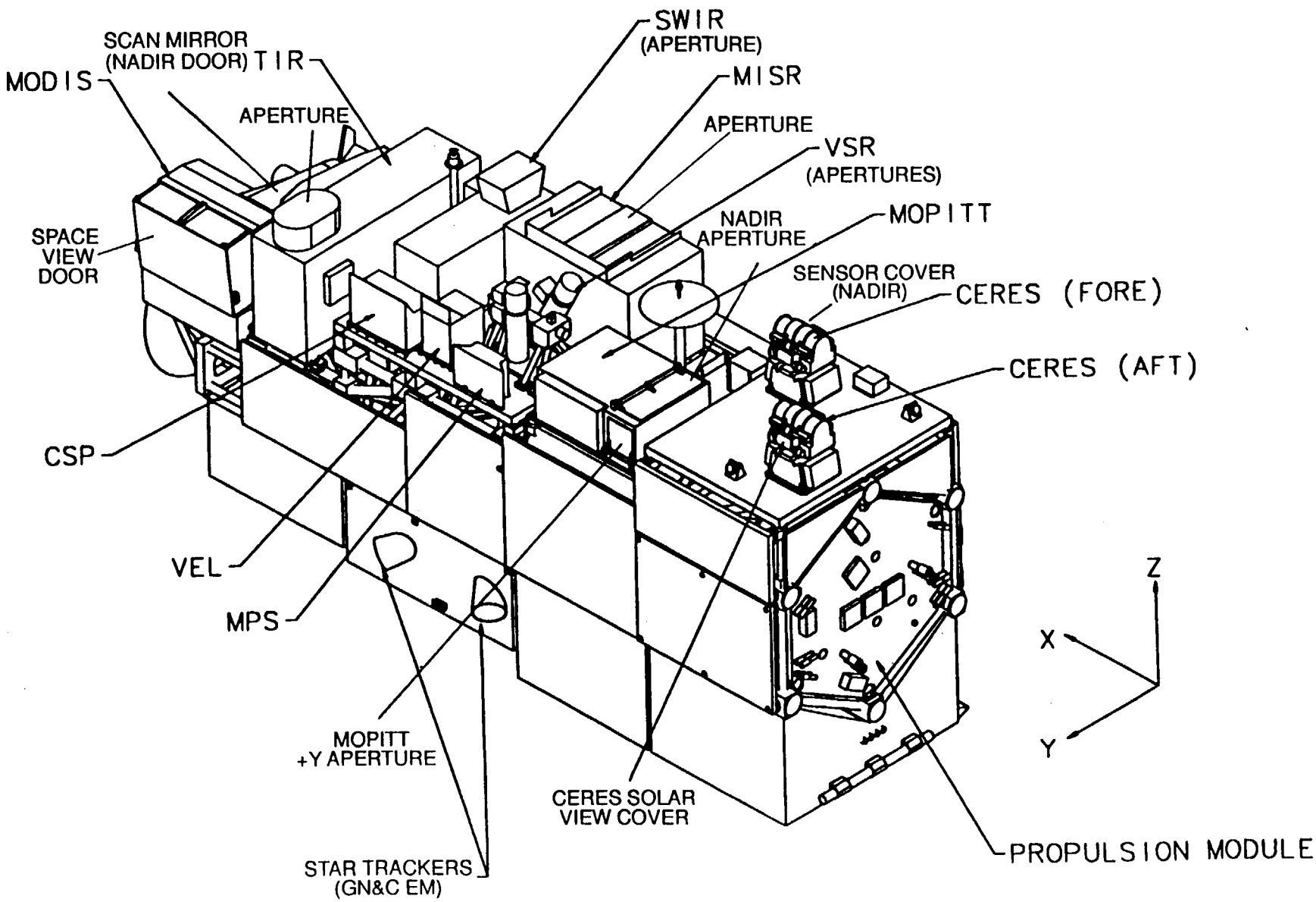

Figure 2. EOS–AM Spacecraft General Arrangement (Page 1 of 4)

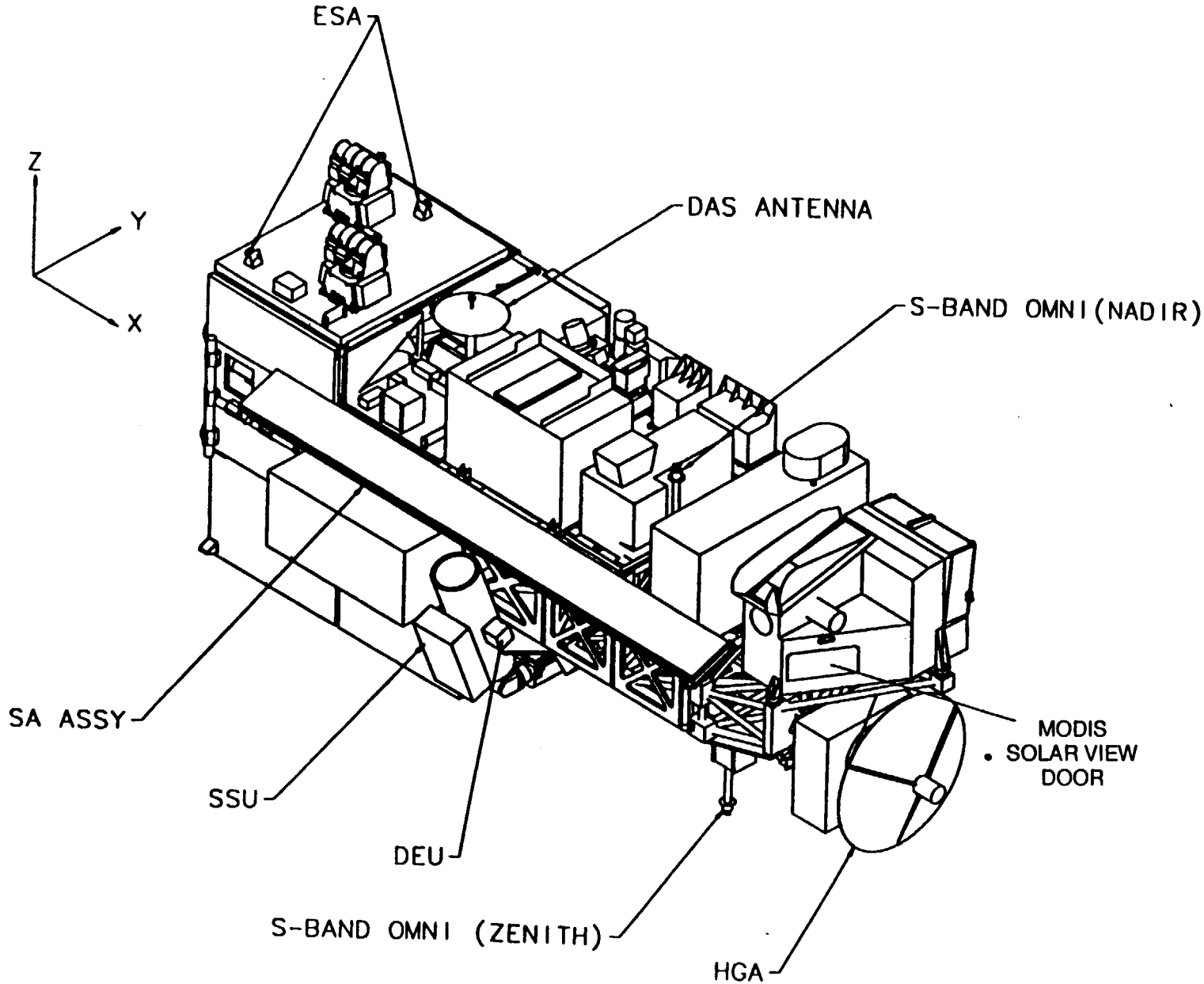

Figure 2. EOS–AM Spacecraft General Arrangement (Page 2 of 4)

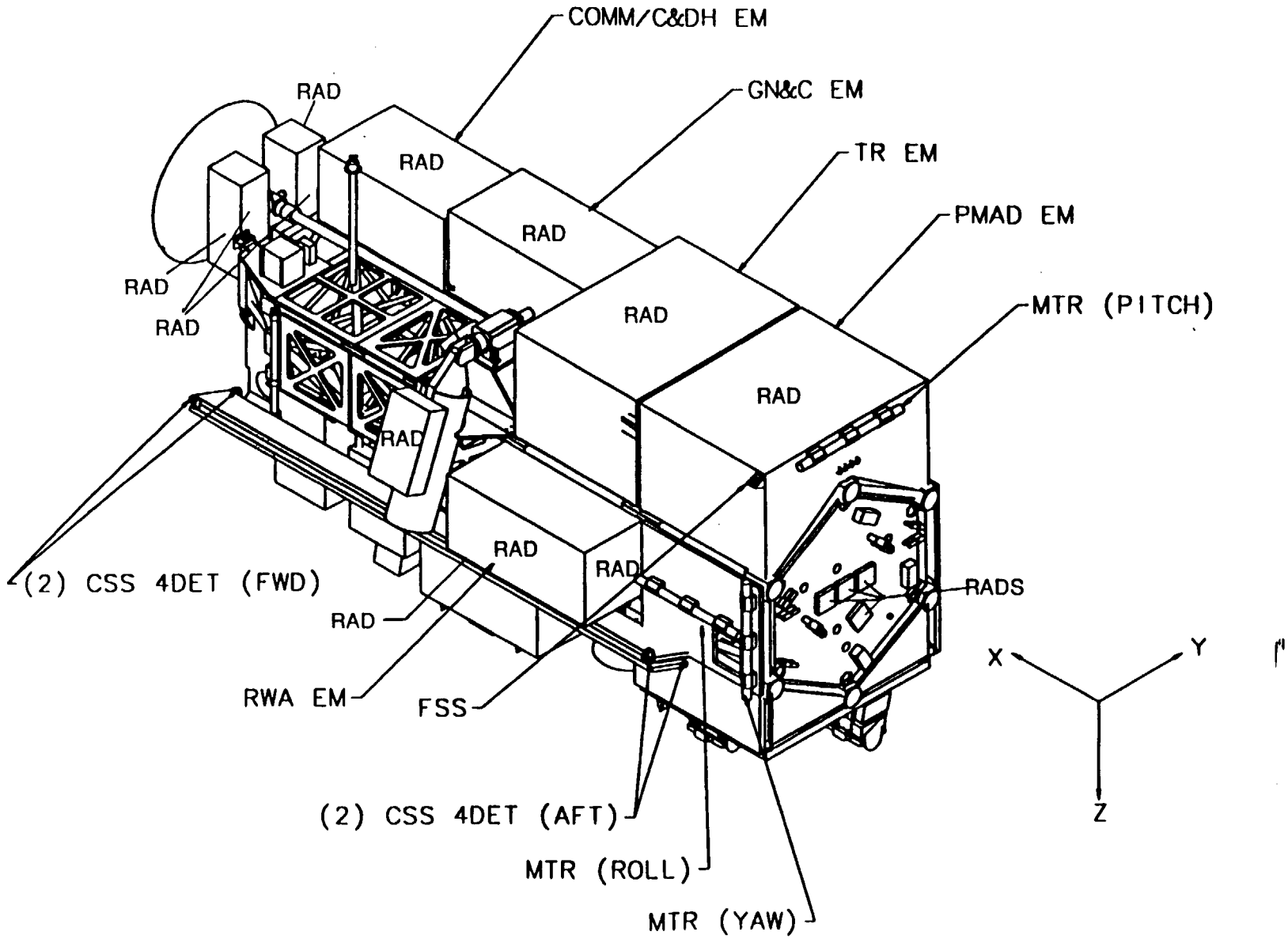

Figure 2. EOS–AM Spacecraft General Arrangement (Page 3 of 4)

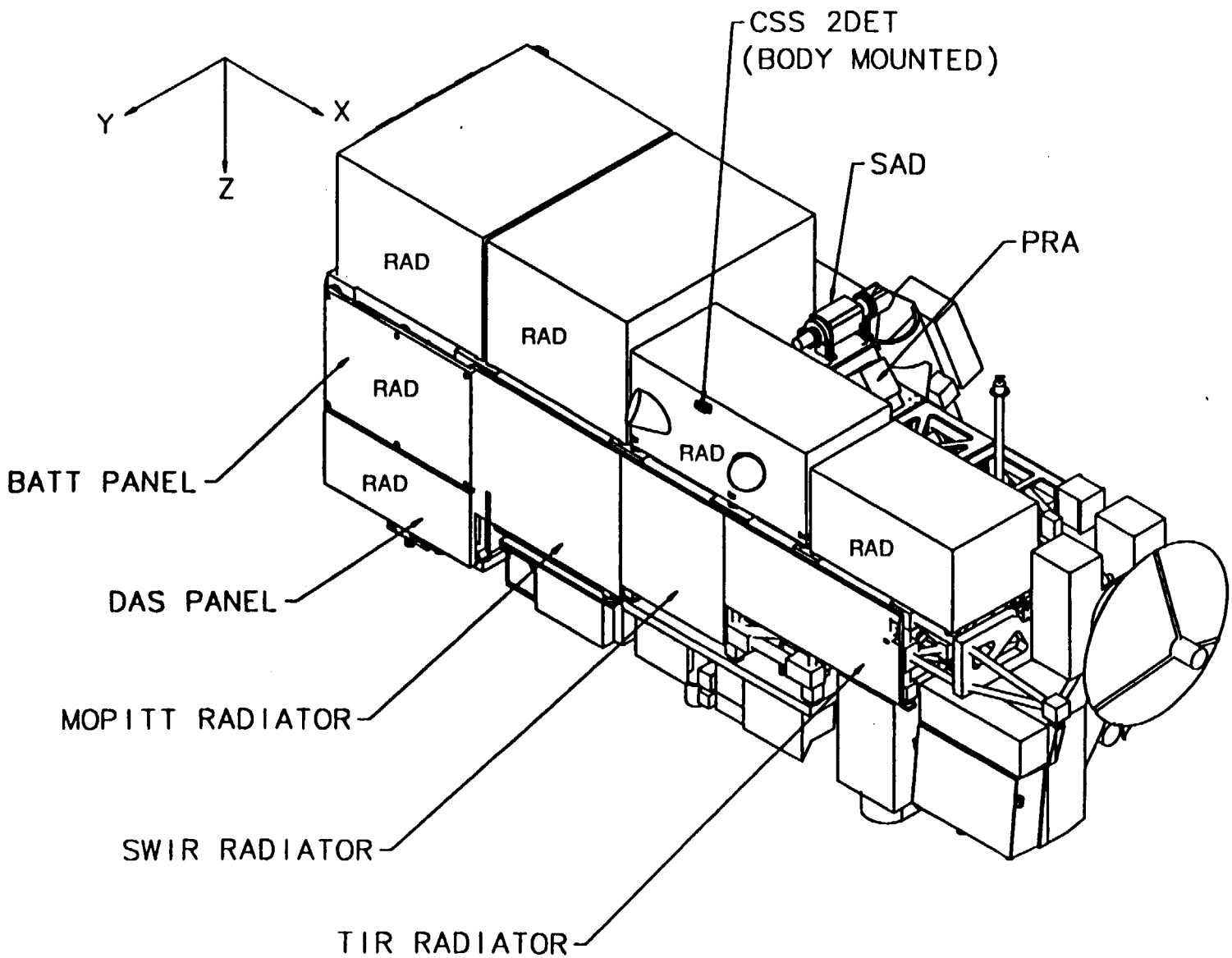

Figure 2. EOS–AM Spacecraft General Arrangement (Page 4 of 4)

Table II. EOS External Surface Cleanliness Level Goals (per MIL–STD–1246B) – Preliminary

Table II, Part A – (per MIL–STD–1246B)	Delivery to Astro		Delivery to Launch Site		After–Orbit Insertion		End of Life	
	Particulate	Molecular	Particulate	Molecular	Particulate	Molecular	Particulate	Molecular
Instruments (external surfaces)*	600	A	600	A	750	B	800	G
Thermal radiators	500	A	600	A	750	B	800	G
Solar array	500	A	600	A	700	A	750	F
ACS sensors (apertures)	500	A	600	A	700	B	750	G
HGA, etc.	500	A	600	A	750	B	800	G

Notes:

- 500, 600, 700, etc., refer to increasing particulate contamination level and distribution as a function of particle size.
- A, B, etc., refer to increasing molecular film contamination levels.

*Initial level needs to be reduced to Level 500A or instrument providers may be required to clean surfaces at Astro 1 or 2 times.

Table II, Part B – (mg/ft^2)	Delivery to Astro		Delivery to Launch Site		After–Orbit Insertion		End of Life	
	Particulate	Molecular	Particulate	Molecular	Particulate	Molecular	Particulate	Molecular
Instruments (external surfaces)	2.4	<1.	2.4	<1.	5.5	<2.	8.2	<8.
Thermal radiators	1.2	<1.	2.4	<1.	5.5	<2.	8.2	<8.
Solar array	1.2	<1.	2.4	<1.	4.5	<1.	5.5	<7.
ACS sensors (apertures)	1.2	<1.	2.4	<1.	4.5	<2.	5.5	<8.
HGA, etc.	1.2	<1.	2.4	<1.	5.5	<2.	8.2	<8.

DCC082693

Table III. Relationship Between Particle Weights and Cleanliness Class

Inspection SN–C–0005A	MIL–STD–1246 A Level	Obscuration Ratio % (Ref. 2)	TFS mg/ft^2	TNP PSDS (–0.42) (Ref. 3)	Particles/ft^2 PSDS (–0.926)	Transmission Loss, % (Ref. 1)	Solar Absorp Chng. (Ref. 1)	Solar Cell Power Loss, % (Ref. 4)
	200	0.007–0.01			1.5–2 x 10^5			
Black Surface VC–2	300	0.03–0.04	0.1–0.3	6–8 x 10^4	6–8 x 10^5			
	400	0.1	0.4–0.5	2 x 10^5	2 x 10^6			
White Surface VC–2	500	0.2–0.4	1.2	4–6 x 10^5	6 x 10^6	0.1		
	650	1.0			2 x 10^7			0.5
White Surface VC–1	750	2.0	5–6	2–3 x 10^6	4 x 10^7	0.3–0.5	0.005	1.0
Ag/FEP VC–2	850	4.0	10–12	5 x 10^6		1.0	0.010	2.0
	1000	10.0	20–24	1 x 10^7	2 x 10^8	2.5	0.023	
	1100	20.0	40–50			8.0	0.085	
	1250	50.0	130			11.0		
	1500	100.0				23.0		

TNP = Total Number of Particles >5 microns/ft^2
TFS = Total Filterable Solids mg/ft^2 >0.5 microns

Table III References

1. Bartleson, D.W., "Contamination and Environmental Data During Payload Bay – Cargo Processing of STS–41B in the PCR," KVT–PL–0025 Add. PCR–ED–STS–41B, April 1984.

2. Champetier, R.J., "Effects of Contaminants on Optical Characteristics of Surfaces," Spacecraft Contamination Workshop, Aerospace Corp., September, 1981.

3. Raab, J.H., MCR–85–2003, February, 1985.

4. Raab, J.H., "Particulate Contamination Effects on Solar Cell Performance," MCR–86–2005, January 1986.

3 CONTAMINATION SOURCES

3.1 Materials Outgassing Requirements

Spacecraft material outgassing is controlled by the selection of materials of construction. Materials used are defined by the EOS–AM Program Approved Materials and Processes List (PAMPL) #20008650. The outgassing criteria are a Total Mass Loss (TML) of 1% or less and a Collected Volatile Condensable Materials (CVCM) of 0.1% or less, when tested per ASTM E595. Materials not meeting the outgassing criteria must be approved by Astro Space Materials Applications through the NSMAR process (see 20008650), who will then forward the NSMAR to the customer for approval. The materials, for which outgassing data are not available, will be sent to GSFC for evaluation by the standard outgassing test. The PAMPL has been reviewed specifically for the outgassing characteristics of the materials.

3.2 Control of Spacecraft Venting

Spacecraft venting represents one of the greatest potential sources of Spacecraft contamination. Bakeout of harnesses, etc. will reduce venting threats. Venting from EOS–AM Spacecraft Bus, instruments, etc. shall be controlled so that excessive contamination onto the EOS–AM critical surfaces will be avoided.

A preliminary assessment, based on line–of–sight (FOV) and return flux considerations, was made to recommend the following venting exits (including paths) for Spacecraft Bus, MLI blankets, and other components.

a. Solar array and high gain antenna will vent away from Spacecraft.

b. Channel vent paths of equipment modules internally and then vent out through an orifice(s) located at the Propulsion Module base panel looking into the Spacecraft's aft (–X) direction.

c. Similar to UARS, blanket edges abutting contamination sensitive surfaces will be sealed and vents will be directed away from such surfaces. Also, outer layer MLI facing a contamination–sensitive surface will not be perforated if the critical surface has a significant view of this outer layer.

3.3 Assessment of Spacecraft Plume Contamination

The propulsion subsystem planned for the EOS–AM Spacecraft is an all–hydrazine staged blowdown system. The propulsion subsystem provides all impulsive requirements for the EOS–AM mission including boost and inclination correction, attitude control, and drag makeup.

High purity monopropellant hydrazine will be used on EOS–AM. The exhaust products in the backflow regions of these hydrazine thrusters include ammonia, nitrogen, hydrogen, and trace quantities of water and hydrazine in gaseous form. Exhaust species of concern for the critical surfaces are ammonia, water and hydrazine.

A preliminary plume contamination assessment (Ref. 2) was made to examine possible threats from the potential contaminants generated by the Spacecraft thruster firings to the EOS–AM critical surfaces and to determine the need of protection for the critical surfaces especially those located near the thruster nozzle exits (within 60 inches). Important considerations are thruster locations, orientation on the Spacecraft, duration of thruster firings, surface temperatures, volatility of exhaust species, and possibility of contaminant/surface chemical reaction.

The assessment was based upon the flowfields generated for a generic 1 lb_f monopropellant hydrazine thruster using the source flow model and for a 5 lb_f monopropellant hydrazine thruster using CONTAM 3.2. Negligible contaminant accretions are expected for the EOS–AM critical surfaces except MODIS detectors and covers. MODIS is planning to close its doors during the thruster firings.

The following recommendations should reduce or eliminate plume contamination:

a. Use high purity hydrazine per MIL–P–26536 as planned.

b. Close doors of MODIS during Spacecraft thruster firings as planned.

Details are described in Ref. 2. Although the current propulsion system (see Figure 3) is different from the one analyzed, the new plume environment is similar to that analyzed. Therefore, the assessment remains applicable. Astro Space Propulsion Engineering is analyzing the flowfields for EOS–AM using DSMC method (Ref. 3). The above assessment will be confirmed when the analyzed flowfields become available.

3.4 Other Contamination Sources

Mechanisms and Pyro's

For the EOS–AM Spacecraft, the mechanisms and deployment devices used on solar array and high gain antenna (HGA) are of most concern. In accordance with the performance specification for EOS–AM solar array assembly (PS20008514), all pyrotechnic devices used on the assembly shall be comprised of ordinances and the NASA Standard Initiator (NSI). The HGA deployment system has 4 separation nuts and 1 damper. Potential contamination from these units was examined. The results are summarized below.

A separation nut will use a booster charge with a NASA standard pyrotechnic initiator. Hi Shear (vendor) provided the following information:

a. NSI charge: 117 mg

b. Products of combustion: zirconium oxide, titanium oxide, potassium chloride, zirconium chloride, titanium chloride, traces of water and CO_2

c. Estimated escape around a NSI is much less than a milligram.

There has been no pyro contamination problem found for other Astro Space scientific programs. Therefore, contaminants from pyros do not appear to pose a threat to EOS–AM Spacecraft. The vendor is being contacted to confirm this assessment.

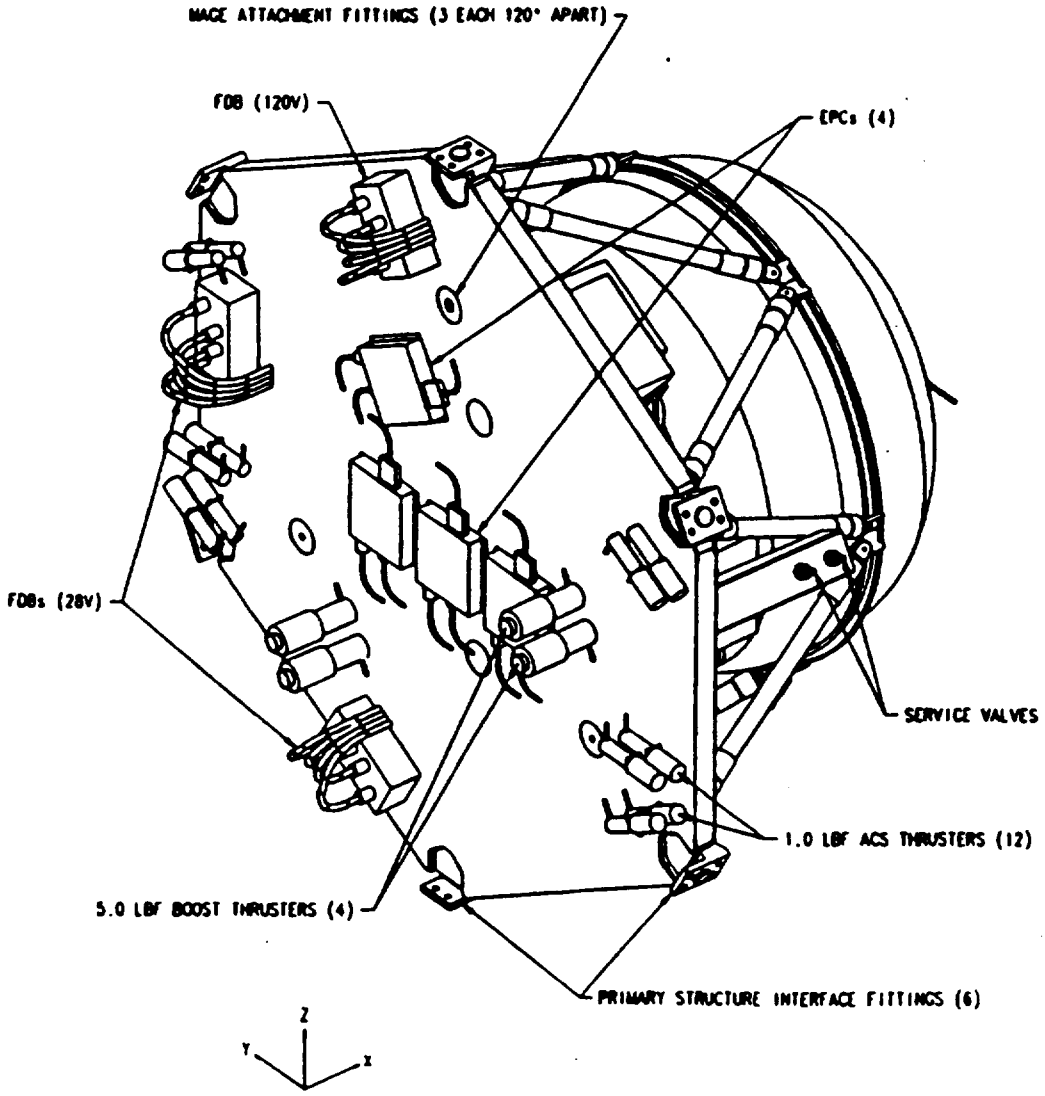

Figure 3. EOS–AM Propulsion System – Current

The HGA hinge assembly uses a vane–orifice damper (heritage design) to control the rate of deployment. The damping fluid used is DC 200 (about 1 oz. of Dow Corning silicone oil). The hinge/damper assembly is designed to survive a temperature range of –50 to +71°C and has been successfully tested to –80 to +80°C. Operating temperatures range from –24 to +61°C.

The Astro Space damper designs (402 hinges total) have been successfully flown on 19 commercial Spacecraft and the Mars Observer (MO). Contamination caused by silicone leakage from the dampers has not been observed.

The damper vendor (D.E.B. Manufacturing) regularly performs a leak test for the unit after filling silicone fluid (in 50–micron vacuum for 1 hour). The MO solar array hinge assembly was subjected to cold and hot T/V deployment tests at temperatures from –80°C to +80°C (5×10^{-5} torr). No leakage from the damper was observed (Ref. 4). Confirmation that there is no contamination threat is still being worked.

Recent analysis (Ref. 5) predicts a total lubricant loss of 3.6×10^{-5} gram per year from all three labyrinths of the EOS–AM solar array drive (SAD). View factor analysis shows that critical surfaces of the Spacecraft do not have views of the SAD.

The remaining contamination mechanism is the flux scattered back to the Spacecraft. Using Scialdone's model (Refs. 6–7), the flux scattered back to the Spacecraft is on the order of 3.6×10^{-7} g/yr or 1.8×10^{-8} g for 5–year mission. The contaminant has a density of 0.85 g/cm^3 and EOS–AM has a size of approximately 22.5 ft x 7 ft x 8 ft. The resultant deposition across the Spacecraft surfaces becomes insignificant. Therefore lubricant loss from the SAD does not present a problem to the EOS–AM Spacecraft (Ref. 5).

Moisture

Moisture desorption from EOS–AM graphite/epoxy (Gr/Ep) structure was examined (Ref. 8). This assessment shows that moisture in Gr/Ep structure does not pose a threat to EOS–AM provided that the Spacecraft venting is controlled to avoid line–of–sight contamination to critical surfaces. Details are described in Ref. 8.

Atomic Oxygen

Based on the updated atomic oxygen (AO) fluence of 1.06×10^{21} AO/cm^2 for 5–year mission, AO erosion of Kapton and Teflon is estimated to be 1.3 mils and < 1 mil, respectively. It was concluded that AO effects on Kapton and Ag–Teflon do not present contamination problems for EOS–AM. Details are presented in (Ref. 9).

4 ASSESSMENT OF MOLECULAR/PARTICULATE CONTAMINATION DEPOSITS AT SENSITIVE LOCATIONS

An analysis of the potential contamination for the ground operations and the EOS–AM flight from its launch through completion of orbital mission was made primarily building upon procedures and programs developed for Astro Space Spacecraft, e.g. DSCS, GPS, LANDSAT, UARS, and GGS.

Contamination to the EOS–AM critical surfaces from ground operations through completion of on–orbit mission was analyzed. Contamination levels at the following sensitive locations are reported:

a. Optical apertures (instruments and attitude control sensors)

b. Solar array

c. Bus thermal radiators

4.1 Ground Operations (Martin Marietta Astro Space and Launch Site)

Potential contamination during ground processing at Astro Space was estimated based upon facility witness plate data (Bay 8) and the duration of surface exposure.

The results (Tables IV and V) show that the Spacecraft needs to be covered and/or cleaned in order to meet the Level 600A requirement. Astro Space's approach to this problem is as follows:

a. Instrument

   1. Initial level needs to be reduced to Level 500A or instrument providers may be required to clean surfaces at Astro Space 1 or 2 times.

b. Spacecraft Bus

   1. Inspect incoming hardware to Level 500A and clean if necessary.

   2. Maintain external surface cleanliness level through 3 points of entire Spacecraft cleaning and inspection at 8 predetermined points in the I&T flow and clean affected areas if necessary.

   3. Cover thermal radiators, ACS sensors and solar array except during tests.

Scheduled cleaning of the entire Spacecraft will be performed at 3 points in the I&T flow: prior to instrument integration, T/V, and shipment.

The Spacecraft will be visually inspected (8 points) during I&T at the times listed below and whenever it appears that contamination is accumulating either due to normal activities or a particular incident.

a. On delivery of the structure

b. Prior to installation of propulsion module

Table IV. EOS–AM Spacecraft Bus Surfaces in Class 10K Clean Room

	Blankets, Structure, etc. (unprotected)			ACS Sensors, S/A, Thermal Radiators (assume protected 90% of the time)		
Days	NVR	Particulate	Level	NVR	Particulate	Level
Start	1.00	1.00	500A	1.00	1.00	500A
30	1.10	1.25	520B	1.01	1.03	500B
90	1.30	1.75	570B	1.03	1.08	510B
180	1.60	2.50	630B	1.06	1.15	510B
270	1.90	3.25	660B	1.09	1.23	520B
360	2.20	4.00	700C	1.12	1.30	525B
720	3.40	7.00	780D	1.24	1.60	560B

*NVR and particulate in mg/ft^2. Level per MIL–STD–1246.

Assumptions:

a. Based on measured Bay 8 data (witness plates)

1. NVR deposition rate = 0.1 mg/ft^2/mo

2. Particulate deposition rate = 0.25 mg/ft^2/mo

b. Surfaces are horizontal

c. S/C cleaning will be performed approximately at 1/3–duration of I&T flow

Table V. EOS–AM Instrument Surfaces in Class 10K Clean Room

Days	NVR, mg/ft^2	Particulate, mg/ft^2	Level (MIL–STD–1246)
Start	1.00	2.10	600A
30	1.01	2.13	600B
90	1.03	2.18	605B
180	1.06	2.25	605B
270	1.09	2.33	620B
360	1.12	2.40	620B
720	1.24	2.70	640B

Assumptions:

a. Based on measured Bay 8 data (witness plates)

   1. NVR deposition rate = 0.1 mg/ft^2/mo

   2. Particulate deposition rate = 0.25 mg/ft^2/mo

b. Surfaces are horizontal

c. Instruments protected for 90% of the time

d. Instruments may require cleaning at Astro 1 or 2 times

DCC082693

20008651
30 August 1993

c. Prior to Spacecraft Bus functional test

d. Prior to mechanical installation of first instrument

e. Post EMC test

f. Post T/V test (after moving to the bay)

g. Prior to acoustic test

h. Prior to shipment

These inspection and cleaning points are shown in Figures 4 and 5.

An analysis was also performed to examine the impacts of using class 100,000 clean room facilities and payload fairing (PLF) at launch site. For 60 days at launch site, the results show that processing EOS–AM in class 100,000 environments is acceptable only if critical surfaces of the EOS–AM Spacecraft can be protected for 90% of the time except during tests. Otherwise, the fairing should be maintained at class 10,000 after the encapsulation. Note that process EOS–AM in a class 10K PLF is equivalent to covering Spacecraft surfaces 90% of the time in a class 100K PLF. Details are described in Tables VI and VII.

4.2 Launch through Orbit Insertion

Potential contamination for EOS–AM flight from its launch via an intermediate launch vehicle (e.g., Atlas IIAS or Titan IV) through insertion into its nominal orbit was assessed. The assessment was primarily based upon the results analyzed for Atlas II and Titan IV launches of DSCS Spacecraft (Refs. 10–11).

Similar to UARS, NOAA–KLM and GGS programs, a cleanliness level of Visibly Clean (VC) Highly Sensitive per SN–C–0005C has been recommended (Ref. 12) as the cleanliness requirement for PLF.

Scialdone's model (Ref. 13) indicates that a surface looking into the launch vehicle acceleration vector during liftoff will be the most contaminated surface (by particles greater than 58 μm and a few particles between 5 and 58 μm). Therefore, ascent particulate contamination on surfaces facing the launch vehicle acceleration vector (e.g. MODIS +X radiator) was examined. For a VC Highly Sensitive PLF, particulate contamination to these surfaces was determined to be less than 1.5% obscuration during ascent.

Also, the analyses (Refs. 10–11) performed for Titan IV and Atlas II launches of DSCS III Spacecraft were reviewed. Potential contamination to the EOS–AM critical surfaces from a VC Highly Sensitive payload fairing will not exceed the allowable budget: 100 Å molecular and 1.5 % particulate obscuration. Results are summarized in Appendix I.

The detailed launch contamination events such as retro burn during separation of the spacecraft from launch vehicle (when available) will be examined to ensure that contamination will not exceed the allowable budget.

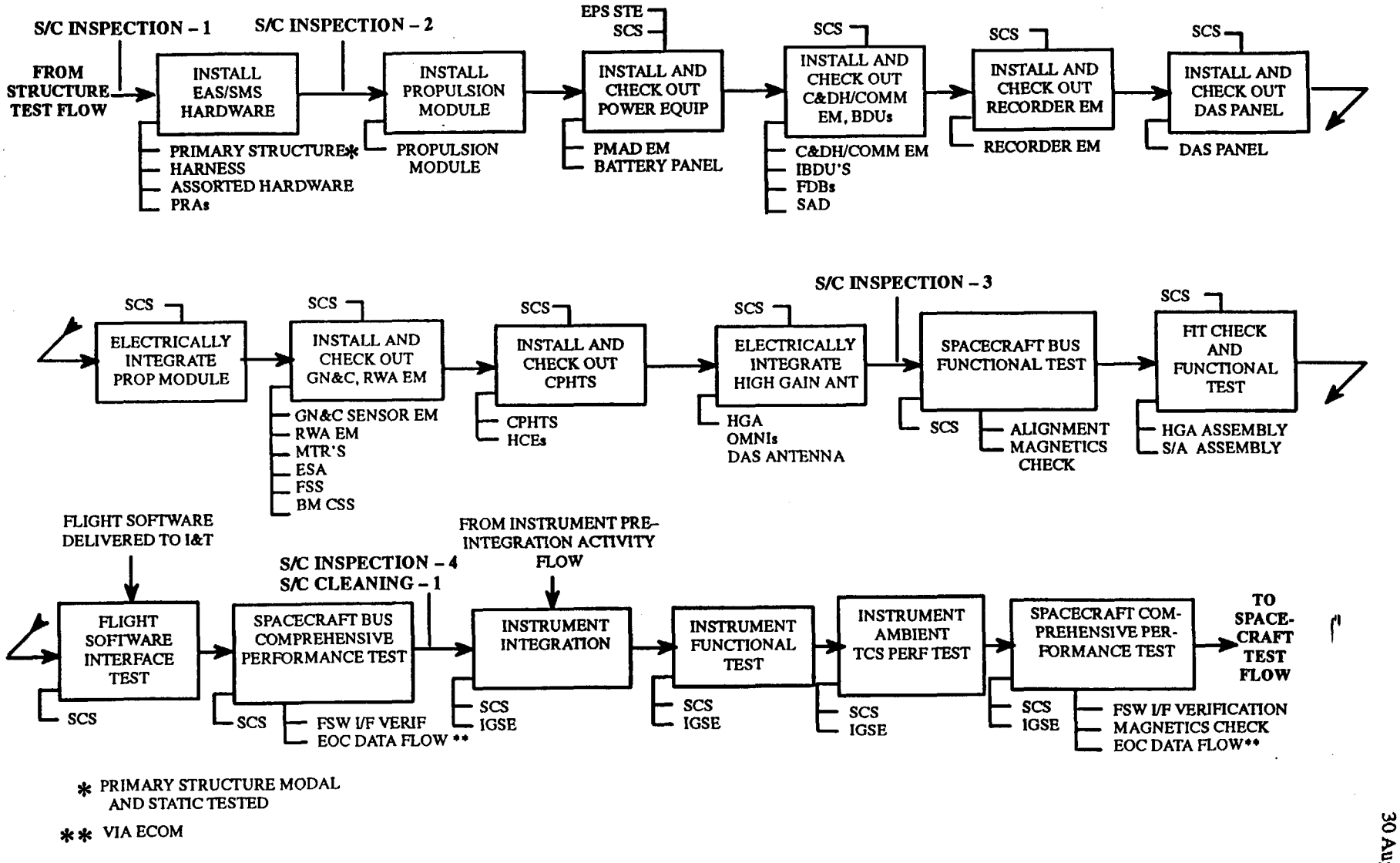

Figure 4. EOS–AM Spacecraft Integration Flow

DCC082693

20008651
30 August 1993

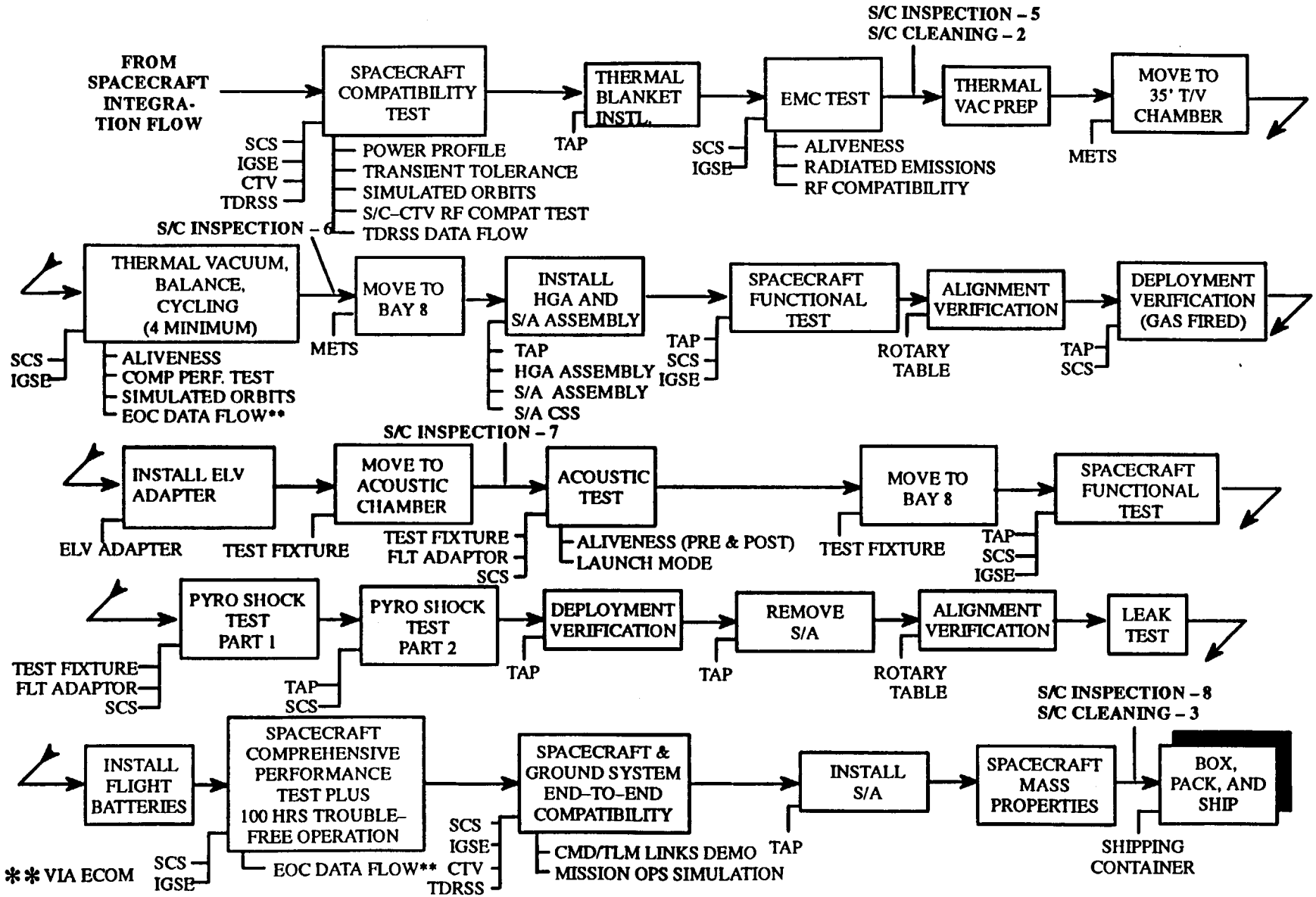

Figure 5. EOS–AM Spacecraft Test Flow

Table VI. Launch Site Contamination Analysis for EOS–AM Spacecraft – Class 100K PLF

ASSUMPTIONS:
1. FACILITY AND PLF - CLASS 100K
2. CRITICAL SURFACES PROTECTED 90% OF THE TIME PRIOR TO PLF ENCAPSULATION

LOCATIO	PERIOD DAY	DEPOSITION RATE MG/FT^2/MO NVR	PARTICULATE	ACCUMULATION MG/FT^2 NVR	PARTICULATE	SURFACE CLEANLINESS MG/FT^2 NVR	PARTICULATE	LEVEL MIL-STD-1246
						1	2.10	600A
FACILITY	30	0.1	0.25	0.1	0.25	1.1	2.35	620B
PLF	30	1.0	2.50	1.0	2.50	2.1	4.85	725C

Table VII. Launch Site Contamination Analysis for EOS–AM Spacecraft – Class 10K PLF

ASSUMPTIONS:
1. CLASS 100K FACILITY AND CLASS 10K PLF
2. CRITICAL SURFACES PROTECTED 90% OF THE TIME PRIOR TO PLF ENCAPSULATION

LOCATIO	PERIOD DAY	DEPOSITION RATE MG/FT^2/MO NVR	PARTICULATE	ACCUMULATION MG/FT^2 NVR	PARTICULATE	SURFACE CLEANLINESS MG/FT^2 NVR	PARTICULATE	LEVEL MIL-STD-1246
						1	2.10	600A
FACILITY	30	0.1	0.25	0.1	0.25	1.1	2.35	620B
PLF	30	0.1	0.25	0.1	0.25	1.2	2.60	635B

4.3 On–Orbit Mission

The molecular deposition on a surface during the on–orbit mission is considered to come from two sources. First is the deposition due to direct flux (line–of–sight) from facing surfaces, second is deposition due to return flux scattered back to the Spacecraft from various sources.

Flight Data

Before presenting model predictions, on–orbit contamination data from OGO–6 (Ref. 14) and NOAA–7 (Ref. 15) flights are shown in Figures 6 and 7, respectively.

The OGO–6 was launched into a polar orbit with a perigee of 397 km and an apogee of 1098 km. The contamination measurements were made with a quartz crystal microbalance (QCM). The contamination flux reaches a maximum when the surfaces are pointed towards either one of the two solar panels on the satellite in June and drops to near zero in August when pointed into deep space and shows that the panels are the primary source of contamination. The time constant for the exponential decay of the outgassing is 1,000 hours (Ref. 14). This time function is used later for EOS–AM direct flux analysis because maximum temperature of OGO–6 solar panels is 80°C. This temperature is closer to on–orbit maximum temperature of EOS–AM MLI (100°C) as compared with the following NOAA–7 data.

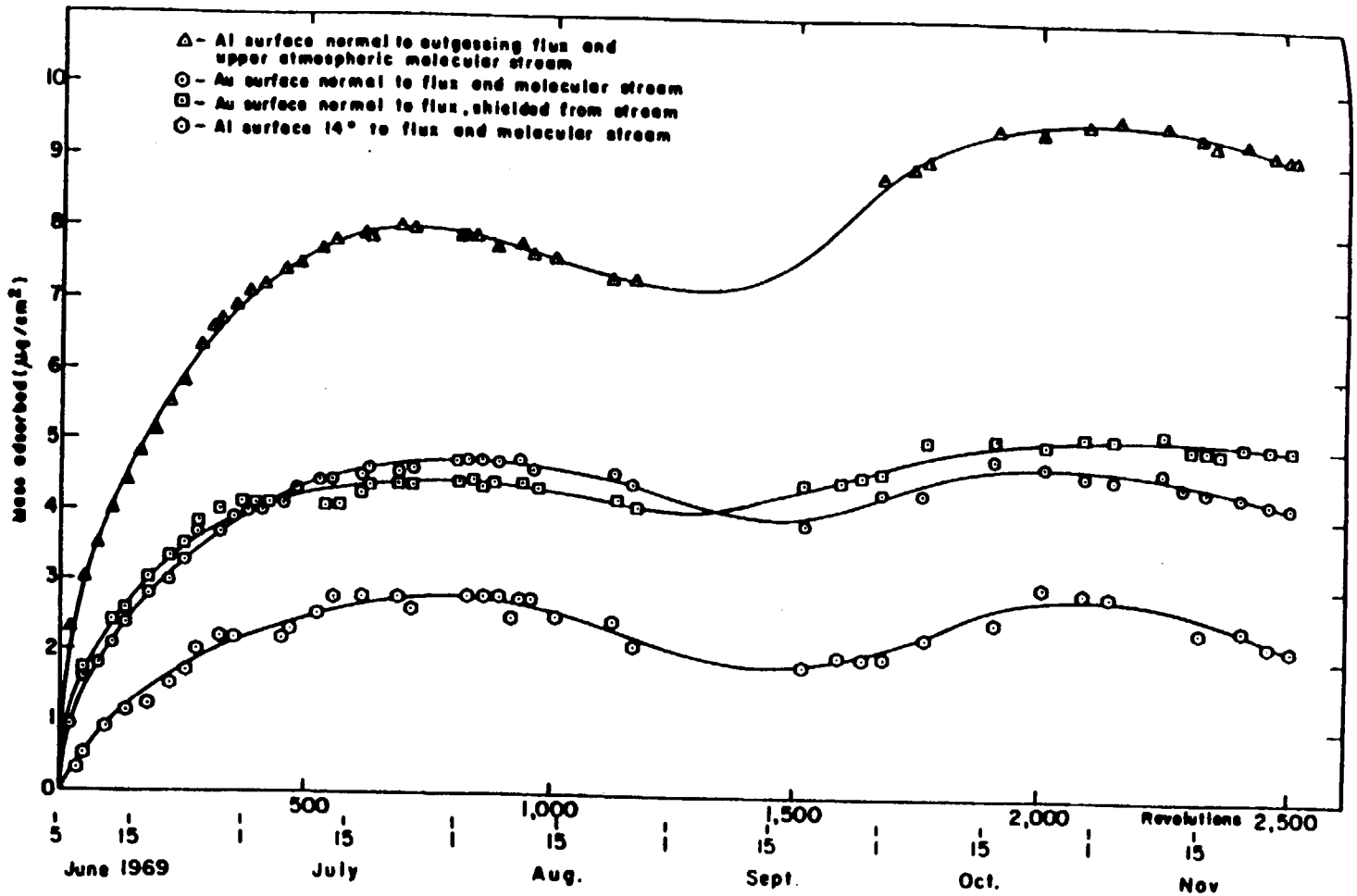

Figure 6. Contamination Loading of Surfaces by Outgassing of OGO–6 Under Various Environmental Conditions

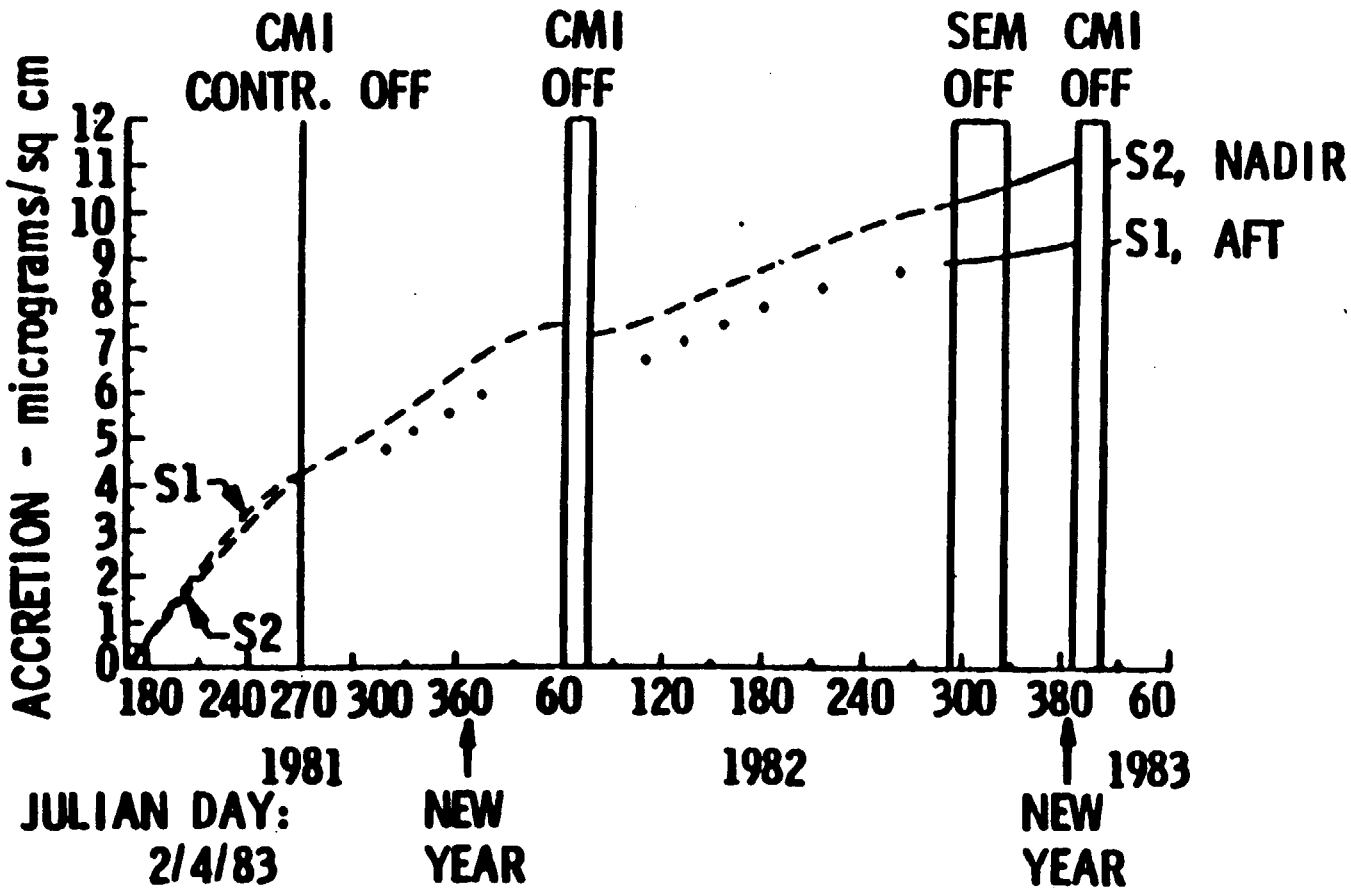

Figure 7. NOAA–C CMI Sensor Data

The NOAA–7 was launched into a 870–km (470–nmi) circular, near–polar orbit. Temperature–controlled quartz crystal microbalances (TQCMs) were arranged so that one faces along the NOAA–7 spacecraft axis and into the backflow of the SRM plume. Another faces Earth or nadir direction. The nadir face had a very small view of the spacecraft while the other face had a considerable view of the aft end of spacecraft and solar panels. Table VIII shows curve–fit results compared with flight data of NOAA–7. The average time function shown in this table is used later for EOS–AM return flux analysis because NOAA–7 data are considered to be primarily due to return flux contamination. Note that nadir TQCM accumulates more contamination than the other TQCM over 1.5–year period. Also, the solar panels were maintained at 55°C while the NOAA–7 spacecraft was assumed to have hot and cold case temperatures of 25 and 5°C, respectively.

Model Predictions

The MOLFLUX method (Ref. 16) was used to analyze direct flux contamination. View factors between surfaces from the TRASYS thermal model were used. The following equation was used:

Deposition = (impingement flux) x (view factor) x (sticking coefficient) x (time)

Assumptions made are as follows:

a. Spacecraft materials outgassing rates used are shown in Table IX.

b. Sticking coefficient is 1.0 (a conservative assumption that contaminants impinging a surface stick to it).

c. Reflected flux is not considered.

d. Outgassing rates decay as the OGO–6 data (i.e. similar time function).

The outgassing rates shown in Table IX are from UARS data and other sources. See references cited in this table.

Table VIII. NOAA–7 TQCM Flight Data

TQCM POINTING DIRECTION	FLIGHT TIME YR	COMPUTED DEPOSITION Å	FLIGHT DATA Å	CURVE-FIT EQUATION
NADIR	0.5	698	650	1520(1-EXP(-1.23T)), T IN YR
AFT	0.5	614	580	1330(1-EXP(-1.239T))
AVERAGE	0.5	657		1425(1-EXP(-1.235T))
NADIR	1.0	1076	1100	1520(1-EXP(-1.23T)), T IN YR
AFT	1.0	945	945	1330(1-EXP(-1.239T))
AVERAGE	1.0	1011		1425(1-EXP(-1.235T))

Table IX. Spacecraft Materials Outgassing*

Name	Outgassing Rate g/cm2/sec	Remarks
Instruments	2.8E–11	Per Instrument PAR (i.e. 1.E–7 g/cm2/hr)(1)
S/C Bus		
Blankets		Based on UARS data, not baked(2)
Initial	7.8E–11	
Depleted	6.E–12	
S/A cell	1.83E–10	Based on UARS data, @ 100 C (2)
S/A back (Kapton)		@ 125 C(3)
Initial	1.5E–9	
After 24 hrs	1.1E–12	
Ag–Teflon (Bus radiators)		@ 75 C(3)
Initial	1.5E–11	
After 24 hrs	4.E–13	
S13G/LO		@ 75 C(3)
Initial	4.5E–8	
After 24 hrs	5.E–10	
Chemglaze Z306		@ 75 C(3)
Initial	5.E–8	
After 24 hrs	1.2E–10	
Venting (Gr/Ep structure, harness, boxes, etc.)	1.E–10	Based on UARS T/V test data(4)

Notes:

(1) GSFC, "Performance Assurance Requirements for the EOS General Instruments," GSFC 420–05–01 Rev. A, Aug. 2, 1991.

(2) J. B. Hatef and D. Yi, "Predicted On–Orbit Contamination of UARS Observatory Instruments due to Direct and Return Flux," TM–732–91–002.

(3) A. P. M. Glassford and J. W. Garrett, "Characterization of Contamination Generation Characteristics of Satellite Materials, " WRDC–TR–89–4114, 22 Nov. 1989.

(4) S. A. Straka, "Contamination Summary of the UARS Observatory Thermal Vacuum Test," Rev. B, Dec. 21, 1990.

*Small amounts of S13G/LO (HGA front reflector, etc.) and Chemglaze Z306 (TBD HGA hinges, etc.) will be used on EOS. Since most items in view of instrument apertures are other instrument surfaces, an outgassing rate of 2.8×10^{-11} g/cm^2/sec (based on instrument) was used in this study.

Most of the items that can be seen from the instrument aperture are portions of that particular instrument, such as covers/doors or shields and other instrument surfaces. For the purpose of this preliminary analysis, instrument self–contamination is ignored. Small amounts of S13G/LO (HGA front reflector, etc.) and Chemglaze Z306 (TBD HGA hinges, etc.) will be used on EOS. Neglect outgassing from S13G/LO and Chemglaze Z306 because instrument apertures do not see items finished with S13G/LO and Z306. Also, neglect outgassing from solar array and vent(s). Since most items in view of the instrument aperture are portions of that particular instrument and other instrument surfaces, an outgassing rate of 2.8×10^{-11} g/cm^2/sec (based on instrument) was used in this preliminary study.

Direct flux levels at instrument apertures were estimated to be less than 420Å. Direct flux deposition on solar array, ACS sensors and Spacecraft Bus radiators was also estimated to be less than 420Å.

Return flux was analyzed using Scialdone's model (Refs. 6–7) and the above direct–flux assumptions except that NOAA–7 time function instead OGO–6 was used. The modelling equations and data used in the analysis are shown in Tables X and XI, respectively. Results (Table XII) show that computed return fluxes are 3 orders of magnitude less than emitted fluxes. Table XII also lists return flux deposition from various sources for 5–year mission. A maximum return flux of 183Å was used in this study.

Table X. Modeling Equations for the Analysis of Return Flux

Return Flux

a. Ambient Scattering

$$\phi_R = \phi_E \frac{R}{\lambda_o} (V_S/V_E + 1)$$

where λ_o is the ambient mean free path at orbital altitude, m
V_S is the spacecraft velocity, km/s
V_E is the velocity of the emitted flux, ϕ_E, km/s
R is the radius of the spherical spacecraft, m
ϕ_E is the emitted flux, molecules/cm^2/s
ϕ_R is the ambient scattered flux, molecules/cm^2/s

b. Self-Scattering

$$\phi_{SS} = 1.78 \times 10^{-8} \frac{\sigma R}{V_E} \phi_E^2$$

where σ is the molecular scattering cross section, cm^2
ϕ_{SS} is the self scattered flux, molecules/cm^2/s

Table XI. Data Used in Return Flux Analysis

Radius of the spherical spacecraft = 225 cm*
Ambient mean free path = 1. E+7 cm
Spacecraft velocity = 8. E+5 cm/sec
Contaminant melecular weight (assumed) = 100 g/mole
Velocity of emitted contaminant flux = 4. E+4 cm/sec
Molecular scattering cross section = 1.0 E-15 cm^2

*Average of EOS height and diameter

Table XII. Return Flux Deposition Analysis for EOS–AM*

ASSUMPTIONS:
(1)STICKING COEFFICIENT = 1.0
(2)FLUX DECAYS AS NOAA-7 DATA (I.E. SIMILAR TIME FUNCTION)

OUTGASSING SOURCES	EMITTED FLUX INITIAL G/CM^2/S	RETURN FLUX INITIAL G/CM^2/S	5-YR RETURN FLUX DEPOSITION Å
VENTING (BOXES, ETC.), S/A FRONT, S13G/LO, CHEMGLAZE Z306	1.00E-10	7.18E-14	183
BLANKETS, INSTRUMENTS	1.00E-11	7.18E-15	18
BUS RADS, S/A BACK	1.00E-12	7.18E-16	2

*USING SCIALDONE'S MODEL ASSUMING A SPHERICAL SPACECRAFT

On–orbit contamination to instrument apertures, solar array and Spacecraft Bus radiators was examined. Similar to EOS–PM (Ref. 17), Spacecraft –Y MLI adjacent to RWA (Reaction Wheel Assembly) radiators need to be non perforated to avoid contamination onto RWA +Z and –X radiators because these radiators have large views of the Spacecraft.

The preliminary assessment shows that on–orbit contamination to all the EOS–AM critical surfaces is less than 600Å molecular (meet their budgets shown in Table II).

Based on other scientific programs of Astro Space (UARS, etc.), particulate contamination during on–orbit mission is assumed to be negligible.

(This page intentionally left blank.)

5 CONTAMINATION EFFECTS

In general, molecular and particulate contamination on a thermal radiator will result in an increase in solar absorptance of the thermal radiator. Contamination to a solar panel and an attitude control sensor will yield a power loss and a transmission loss, respectively.

Contamination to the critical surfaces from ascent through completion of on–orbit mission is summarized in Table XIII. The preliminary effects caused by surface contamination for the entire flight are also summarized in this table.

Spacecraft Bus radiators (silvered Teflon) have a BOL alpha (solar absorptance) of 0.10 and an EOL alpha of 0.25. Contamination degradation to these Bus radiators results in an increase to alpha of about 0.08. This leaves about 0.07 to account for space environment degradation which is predicted to be 0.04 with a margin of 0.03.

Based on other scientific programs of Astro Space, the resultant losses for solar array and ACS sensors will not present problems for EOS–AM.

Table XIII. Contamination to EOS–AM Critical Surfaces from Launch through Completion of On–Orbit Mission

	Launch thru Orbit Insertion		On–Orbit		Launch thru Completion of On–Orbit Mission		
	Molecular Å	Particulate % Obscuration	Molecular Å	Particulate % Obscuration	Molecular Å	Particulate % Obscuration	Effect
Instrument apertures	<100	Negligible	<600	Negligible	<700	Negligible	
S/C Bus radiators	<100	1.5% max.	<600	Negligible	<700	1.5% max.	0.07 $\Delta\alpha$ due to molecular 0.01 $\Delta\alpha$ due to particulate
S/A cells	N/A	N/A	<600	Negligible	<600	Negligible	<2% power loss
ACS sensors	<100	Negligible	<600	Negligible	<700	Negligible	<2% transmission loss

6 CONCLUSION AND RECOMMENDATIONS

Based on the above preliminary assessment, preventive measures are recommended as follows:

a. Channel vent paths of equipment modules internally and then vent out from Propulsion Module (looking into S/C aft direction) – preliminary.

b. Place non–perforated layers on the S/C –Y blankets adjacent to RWA +Z and –X radiators to reduce contamination onto these radiators.

c. Use high purity hydrazine as planned.

d. Cover the EOS–AM critical surfaces as much as possible (except during tests) during ground operations.

e. Require a Visibly Clean Highly Sensitive PLF.

f. Maintain a class 10,000 environment or better for PLF.

g. Adhere to the EOS–AM Contamination Control Plan during I&T at Astro Space and launch site.

h. Examine post PLF jettison scenario when available to ensure the allowable budget is not exceeded.

Because of the simplified assumptions made for on–orbit contamination analysis and a desire to reduce the on–orbit budget for EOS–AM instruments from 600Å to less than 200Å (not a requirement), the SPACE 2/MOLFLUX code must be used to analyze on–orbit molecular contamination. The ongoing tasks are as follows:

a. Continue to analyze on–orbit contamination using the SPACE 2/MOLFLUX code.

b. Examine and ensure venting from instruments, equipment modules, MLI, solar array, high gain antenna, etc. is directed away from the contamination–sensitive surfaces.

(This page intentionally left blank.)

7 REFERENCES

1. Martin Marietta Astro Space, "EOS–AM Contamination Control Plan," PN–20001412, SEP–107, 12 May 1992.
2. C. Chang, "EOS–AM Spacecraft Plume Contamination Analysis," EOS–DN–CTM–013, 8 January 1993.
3. G. A. Bird, "DSMC Computation of Two–Dimensional or Axially–Symmetric (G2) or Three–Dimensional with Axially–Symmetric Grid (A3) Rarefied Gas Flows," Version 1.8, March 1992.
4. C. Chang, "Reply to EOS–AM Mechanical Subsystem PDR Action Item 8," 25 November 1993.
5. C. Chang, "Reply to EOS–AM Solar Array Drive Component PDR Action Items," 2 April 1993.
6. J. J. Scialdone, "Self Contamination and Environment of an Orbiting Spacecraft," NASA TN D–6645, May 1972.
7. J. J. Scialdone, "Correlation of Self–Contamination Experiments in Orbit and Scattering Return Flux Calculations," NASA TN D–8438, March 1977.
8. C. Chang, "Reply to EOS–AM Mechanical Subsystem PDR Action Item 7," 25 November 1993.
9. C. Chang and T. Lloyd, "Assessment of ITO Requirement for EOS–AM Thermal Blankets," EOS–CTM–007, 3 July 1991.
10. General Dynamics, "DSCS III/Atlas II Contamination Deposition Analysis," MPER 90–004, 20 July 1990.
11. Martin Marietta, "Titan IV/IUS/DSCS Contamination Analysis," MCR–89–2538, 23 May 1989.
12. C. Chang, "Comments on EOS–AM Interface Requirements Document for an Intermediate Launch Vehicle (DR ICD–103)," EOS–CTM–017, 24 March 1992.
13. J. J. Scialdone, "Particulate Contaminant Relocation During Shuttle Ascent," NASA TM–87794, June 1986.
14. D. McKeown and W. E. Corbin, Jr., "Space Measurements of the Contamination of Surfaces by OGO–6 and Their Cleaning by Sputtering and Desorption," Space Simulation, NBS, SP–336, pp. 113–127, 1970.
15. C. R. Maag and J. M. Millard, "NOAA Contamination Monitoring Instrument, Design and Performance of a Contamination Monitoring Instrument on a NOAA Satellite," AFPRL–TR–85–065, Sept. 1985.
16. E. R. Rios, et al., "MOLFLUX, Molecular Flux User's Manual," Lockheed Engineering Management Services Company Inc., JSC–22496, March 1987.
17. Martin Marietta Astro Space, "Contamination Analysis for the EOS Common Spacecraft", 16 June 1993.

(This page intentionally left blank.)

APPENDIX I

10 LAUNCH CONTAMINATION ASSESSMENT

Titan IV Launch

The Titan IV/IUS/DSCS III/III Contamination Analysis (Ref. 1) was performed by Martin Marietta Corporation – Denver. Table XIV identifies contamination events analyzed by Martin Marietta. The contamination levels predicted by Martin Marietta for the Titan launch events and DSCS III surfaces are summarized in Tables XV and XVI, respectively.

Atlas II Launch

The DSCS III/Atlas II Contamination Deposition Analysis (Ref. 2) was performed by General Dynamics Space Systems Division (GDSS). Table XVII identifies contamination events analyzed by GDSS. The GOES/Atlas I Contamination Analysis (Ref. 3) was used by GDSS to provide baseline (Table XVIII) from which DSCS III depositions were predicted. The predictions were derived by interpolating, extrapolating, or concluding by similarity of the time, configuration, and processing dependent functions. Table XIX lists contamination levels predicted for Atlas II launch of DSCS III vehicle.

Table XIV. Contamination Events Analyzed by Martin Marietta for Titan IV Launch

Event	Tasks Performed
Ground Operations	o Ground Processing (DSCS & PLF)
Stage 0 Ignition	o SRM ignition and lift off o PLF/acoustic blanket outgassing (presumably up to PLF jettison) o PLF/acoustic blanket particle redistribution
Stage I Ignition	o None
Stage 0 Separation	o SRM separation
PLF Jettison	o PLF separation
Stage II Ignition	o Fire-in-the-hole
Stage II Separation	o Retro fire

Table XV. Martin Marietta's Predicted Contamination Levels for UES and Titan IV Sources*

Event	Molecular Mg/Sq Ft	Particle % Obscuration
Ground Processing	0.22	2.08
SRM Ignition	0.00	0.00
PLF Outgassing	0.37	N/A
PLF Particle Redistribution	N/A	0.33
SRM Separation	0.19	N/A
Fire-in-the-Hole	0.00	0.00
Retro Fire	0.01	0.03
Total	0.79	2.44

*Table 2.23 of Ref. 1, p. 141

Table XVI. Predicted Contamination Levels for UES and Titan IV Sources

		Molecular Deposition mg/ft^2					Particulate	
Event	Source	OSR's	Solar Arrays	Sun Sensors	Earth Sensors	Other External	mg/ft^2	% Obscuration
Pre-launch Ground Ops	UES	0.22	0.22	0.22	0.22	0.22	--	2.08
Launch thru Deployment	TIV	0.57	0.57	0.57	0.57	0.57	--	0.36
Total		0.79	0.79	0.79	0.79	0.79	--	2.44*
(ICD Budget		1.70	1.80	1.80	1.70	2.30	3.70	1.50)

*ICD requirement is 1.5% obscuration

Table XVII. Potential Atlas II Centaur Contamination Sources Analyzed

Mission Phase	Contamination Sources
Ground Processing	•Particulate Fallout •NVR •Gas Conditioning
T-24 hrs through SECO	•Particulate redistribution •NVR •Atlas (PLF) material outgassing •Centaur material outgassing •Nose fairing jettison
SECO through MECO2	•Centaur material outgassing •Centaur RCS exhaust plume •TAL-108 exhaust plume •Shape charge debris
MECO2 through EOCM	•Centaur material outgassing •Centaur RCS exhaust plume •Propellant tank blowdown

Notes:

1. SECO (Sustainer Engine Cut Off)
2. MECO (Main Engine Cut Off)
3. EOCM (End of Centaur Mission)

Conclusion

Results of the above analyses show that potential contamination due to Titan IV or Atlas II launch will not exceed the allowable budget: 100 Å molecular and 1.5 % particulate obscuration.

The detailed launch contamination events such as retro burn during separation of the spacecraft from the launch vehicle (when available) will be examined to ensure that contamination will not exceed the allowable budget.

References:

1. Martin Marietta Astro Space, "Titan IV/IUS/DSCS Contamination Analysis," MCR–89–2538, 23 May 1989.

2. General Dynamics, "DSCS III/Atlas II Contamination Deposition Analysis," MPER 90–004, 20 July 1990.

3. Science Applications International Corp., "GOES Contamination Analysis," Final Report, Rev. A, July 18, 1990.

Table XVIII. Baseline DSCS III Deposition Predictions

Mission Phase	Deposition, mg/ft^2 (Molecular) and MIL-STD-1246A Level (Particulate)				
	OSR's [1]	Solar Arrays [2]	Sun Sensors [3]	Earth Sensor [4]	Other External [5]
Ground Processing					
• Particulate Deposition	NEG	300	NEG	NEG	300
• Molecular Deposition	0.40	0.40	0.40	0.09	0.40
T-24 hrs Through SECO					
• Particulate Deposition	600	750	600	600	750
• Molecular Deposition	0.48	0.43	0.42	0.48	0.43
SECO Through MECO2					
• Particulate Deposition	N/A	N/A	N/A	N/A	N/A
• Molecular Deposition	NEG	0.14	NEG	NEG	0.16
MECO2 Through EOCM					
• Particulate Deposition	N/A	N/A	N/A	N/A	N/A
• Molecular Deposition	NEG	-0.12	NEG	NEG	-0.01
TOTAL					
• Particulate Deposition	600	750	600	600	750
• Molecular Deposition	0.88	0.85	0.82	0.57	0.98

1. Reference Table 7-11 From Reference 3
2. Reference Table 7-4 From Reference 3
3. Reference Table 7-7 From Reference 3
4. Reference Table 7-2 From Reference 3
5. Reference Table 7-3 From Reference 3
   Which Represents Sensitive Surface With Maximum Deposition

Table XIX. GDSS's Predicted Contamination Levels for Atlas II Launch of DSCS III

	CONTAMINATION DEPOSITION MOLECULAR (MG/FT^2) / PARTICULATE (MIL-STD-1246A)				
	OSR'S	SOLAR ARRAYS	SUN SENSORS	EARTH SENSOR	OTHER EXTERNAL
PREDICTED DEPOSITION	0.81/480 (1.0)	0.87/800 (2.4)	0.77/480 (1.0)	0.81/680 (1.8)	0.83/800 (2.4)
ICD REQUIREMENT	1.7/700 (3.7)	1.8/700 (3.7)	1.8/700 (3.7)	1.7/700 (3.7)	2.3/700 (3.7)

Note: Astro Space added conversion of particulate levels per MIL–STD–1246A to mg/ft2 as enclosed in parentheses.

(This page intentionally left blank.)

PN20008660
CAGE No. 49671
30 August 1993

(Preliminary) Alignment Plan for EOS–AM Spacecraft (SEP–121)

Prepared under:
Contract NAS5–32500
NASA Goddard Space Flight Center
Greenbelt, Maryland 20771

Prepared by:
Martin Marietta Corporation
Astro Space
P.O. Box 800
Princeton, New Jersey 08543–0800

DCC082793

REVISION LOG

This log identifies those portions of this document which have been revised since the original issue. Revised portions of each page, for the current revision only, are identified by marginal striping.

Revision	Paragraph Number(s) Affected	Rev. Date	Approval
Prelim		09/28/92	OR
01	All Sections	08/30/93	RR

TABLE OF CONTENTS

SECTION / PARAGRAPH	TITLE	PAGE
1	SCOPE	1
1.1	Definitions	1
2	MANAGEMENT	3
2.1	Organization and Responsibilities	3
2.1.1	Astro Space Systems Engineering and Integration (SE&I)	3
2.1.2	Astro Space Engineering (Design, Stress and Dynamic Analysis and Thermal)	3
2.1.3	Astro Space Integration and Test (I&T) Group	5
2.1.4	Astro Space Instrument Accommodations Group	6
2.1.5	Instrument Providers	6
2.1.6	GSFC	6
2.2	Planning	6
2.3	Applicable Documents	6
2.3.1	Government Documents	6
2.3.2	Non–Government Documents	7
2.3.3	References	7
3	MECHANICAL ALIGNMENT PROCEDURE	9
3.1	Spacecraft Pointing Specifications	9
3.2	Spacecraft Assembly	9
3.3	Primary Structure Optical Cubes Installation and Alignment	9
3.4	O–G Alignment	10
3.5	GN&C Sensor EM Alignment	10
3.6	Instruments	11
3.6.1	Instrument Pointing Requirements	11
3.6.2	Instrument Interfaces	12
3.6.3	Instrument Alignment	12
3.7	Component Specific Alignment	22
3.7.1	Instruments	22

TABLE OF CONTENTS (Continued)

SECTION / PARAGRAPH	TITLE	PAGE
3.7.1.1	ASTER–SWIR	22
3.7.1.2	ASTER–TIR	22
3.7.1.3	ASTER–VSR	23
3.7.1.4	CERES	23
3.7.1.5	MISR	23
3.7.1.6	MODIS	23
3.7.1.7	MOPITT	23
3.7.2	GN&C Components	24
3.7.2.1	Fine Sun Sensor (FSS)	24
3.7.2.2	Earth Sensors	24
3.7.2.3	Solid State Star Trackers (SSSTs)	24
3.7.2.4	Inertial Reference Unit (IRU)	24
3.7.3	Communication Components	24
3.7.3.1	High Gain Antenna (HGA)	24
3.7.4	Propulsion Components	25
3.7.4.1	Rocket Engine Assembly (REA)	25
4	ALIGNMENT VERIFICATION	27
4.1	Manufacturing Stage	27
4.2	Alignment Test Program	27
4.2.1	Alignment Measurements and Environmental Tests	27
4.3	Verification by Measurement	28
4.3.1	Remate Errors	28
4.4	Verification by Analysis	28
4.4.1	Structural Dynamics	28
4.4.2	Moisture Distortion	29
4.5	Verification by Analysis and Test Measurement	29
4.5.1	Handling Fixtures and Facility Effects	29
4.5.2	Launch Shift	29
4.5.3	1–G Effects	29

TABLE OF CONTENTS (Continued)

SECTION / PARAGRAPH	TITLE	PAGE
4.5.4	Thermal Distortion	30
4.5.5	Measurement Accuracy	30
4.5.6	Instrument Alignment Accuracy	30
4.5.7	On–Orbit Alignment Accuracy	31
4.6	End–to–End Alignment Verification	31
4.7	Alignment Program Verification	31
5	FACILITIES AND EQUIPMENT	33
5.1	Facilities	33
5.2	Equipment	33
6	ACRONYM LIST	35

LIST OF FIGURES

FIGURE	TITLE	PAGE
1	Astro Space Organizational Responsibilities	4
2	EOS–AM Primary Structure	13
3	IMP Interface	14
4	Pre–alignment Configuration	15
5	Spacecraft I&T Flow and Alignment Phases	16
6	Yaw Axis Alignment	18
7	EOS–AM Spacecraft Instrument Placement and Alignment Configuration	20
8	EOS AM Vertical Alignment Verification Configuration	21

LIST OF TABLES

TABLE	TITLE	PAGE
I	Alignment Test Program Verification Matrix	32

TBD LOG

ITEM	SECTION	PAGE	SUBJECT	RESP.	DUE
TBD–1	3.3	9	Number of Primary Structure	Mech Eng	S/C CDR
TBD–2	3.7.1.2	22	TIR XY–Mounting Plane Definition	ASTER	Struct & Mech CDR
TBD–3	3.7.2.1	24	FSS Alignment Requirements	GN&C	S/C PDR +6 Weeks

TBR LOG

ITEM	SECTION	PAGE	SUBJECT	RESP.	DUE
TBR–1	3.7.1.1	22	SWIR IAC Visibility	Mech Design	S/C PDR +12 weeks
TBR–2	3.7.1.6	23	MODIS IAC Location	MODIS	S/C PDR –13 weeks

(This page intentionally left blank.)

1 SCOPE

This document sets forth the organization, requirements, philosophy, and definition of the alignment method for the EOS–AM Spacecraft. It also describes the analyses and tests required to verify the procedures and assumptions made in the definition of the Alignment Plan. Each of the primary pointing error sources is addressed.

The purpose of the EOS–AM Spacecraft System Alignment Plan is to define and discuss, at a system level, the components of the alignment and verification programs which will insure that the end–to–end compensatory pointing requirements of the EOS–AM Spacecraft pointing critical components can be satisfied. The intent of this document is to provide sufficient depth so that the alignment approach and contributing factors can be understood and detailed implementation plans developed. The procedural details are discussed in the applicable documents which are identified in Section 2.3.

This plan defines the organizational responsibilities of the groups within Martin Marietta Astro Space (Astro Space) contributing to the EOS–AM Spacecraft alignment. The plan does not address the technical details of the activities within any of the groups except that it defines the method of alignment to ensure that the pointing critical components defined by their alignment cubes are each aligned with the Master Reference Cube (MRC) to within specified tolerances when they are installed on the spacecraft.

The pointing requirements and the allocations assigned to the Spacecraft subsystems are summarized in Section 3.1 and Reference 1, followed by a discussion of the concept and implementation of the ground alignment plans (Sections 3 and 4). Section 5 summarizes the facilities and equipment applicable to the ground alignment program.

1.1 Definitions

The following terms which represent critical reference points are used frequently throughout this document. It should be noted that for the purposes of this document the Guidance, Navigation and Control Sensor Equipment Module (GN&C Sensor EM) is considered in the category with instruments.

Pointing Knowledge	The accuracy of determination of the actual pointing direction of a given axis of a selected reference frame. Pointing knowledge can refer to a real–time (on–board) determination or a post–processed (after–the–fact) determination.
Pointing Accuracy	The angle between the actual pointing direction and the desired pointing direction of a selected reference frame about a given axis.
Axes of Rotation	Roll refers to rotation about the Spacecraft X–axis. Pitch refers to rotation about the Spacecraft Y–axis. Yaw refers to rotation about the Spacecraft Z–axis.

IAC This is the Instrument Alignment Cube which is physically placed on the instrument structure. This cube represents the instrument boresight with known offsets and therefore is the cube used by the Instrument Integrator (Astro Space I&T Group) to align the instrument. This cube is also referenced to the instrument mounting interface.

NBC This is the Navigation Base Cube and it is placed on the Navigation Base Plate ie., the GN&C Sensor EM optical bench. This cube is referenced to the Inertial Reference Unit (IRU) Cube.

MRC This is the Master Reference Cube which is placed on the primary structure during the manufacturing phase. This cube represents the Spacecraft reference coordinate system and there is a second cube for redundancy.

2 MANAGEMENT

2.1 Organization and Responsibilities

The end–to–end alignment of the EOS–AM Spacecraft, i.e., the alignment of the IACs with the MRC and the verification of that alignment is the responsibility of Astro Space. It will require interaction of several components within Astro Space, but will also require inputs from the Principal Investigators (PIs) for each instrument and NASA GSFC. Figure 1 identifies the participating organizations and the major responsibilities, or output products, of each organization relative to the EOS–AM Spacecraft alignment. Additional details regarding the responsibilities are discussed in the following paragraphs.

2.1.1 Astro Space Systems Engineering and Integration (SE&I)

a. Identify all sources of pointing error which may degrade the pointing accuracy and pointing knowledge for each pointing critical component

b. Allocate values to each source of pointing error which are consistent with analyses, historical data, and available facilities. These allocations are stipulated as requirements on the Spacecraft subsystems.

c. Maintain and update the pointing error budgets for each component consistent with developing analyses, tests, and requirements. Also define the process for maintaining, updating and reporting the pointing error budget on a regular basis.

d. Support the Alignment Test Program and the Integration and Test (I&T) Program by providing interpretation of alignment requirements and allocations.

e. Provide alignment requirements for incorporation into Equipment Module specifications.

f. Work in conjunction with GSFC to identify any requirements for on–orbit calibration and to assess the impact that this would have on ground calibration.

2.1.2 Astro Space Engineering (Design, Stress and Dynamic Analysis and Thermal)

a. Prepare this document, the EOS–AM Spacecraft Alignment Plan (PN20008660).

b. Perform analyses and engineering tests as required to determine the placement and remate accuracy of the kinematic mounts as well as launch shift that may occur at the kinematic mount interface and at the instrument interface to its mounting plate for plate mounted instruments.

c. Develop an integrated thermal math model of the EOS–AM Spacecraft and instruments which can be used to estimate temperature distributions within the structure.

d. Generate estimates of the temperature distributions for a range of on–orbit thermal environments (e.g., different beta angles and Instrument operational modes).

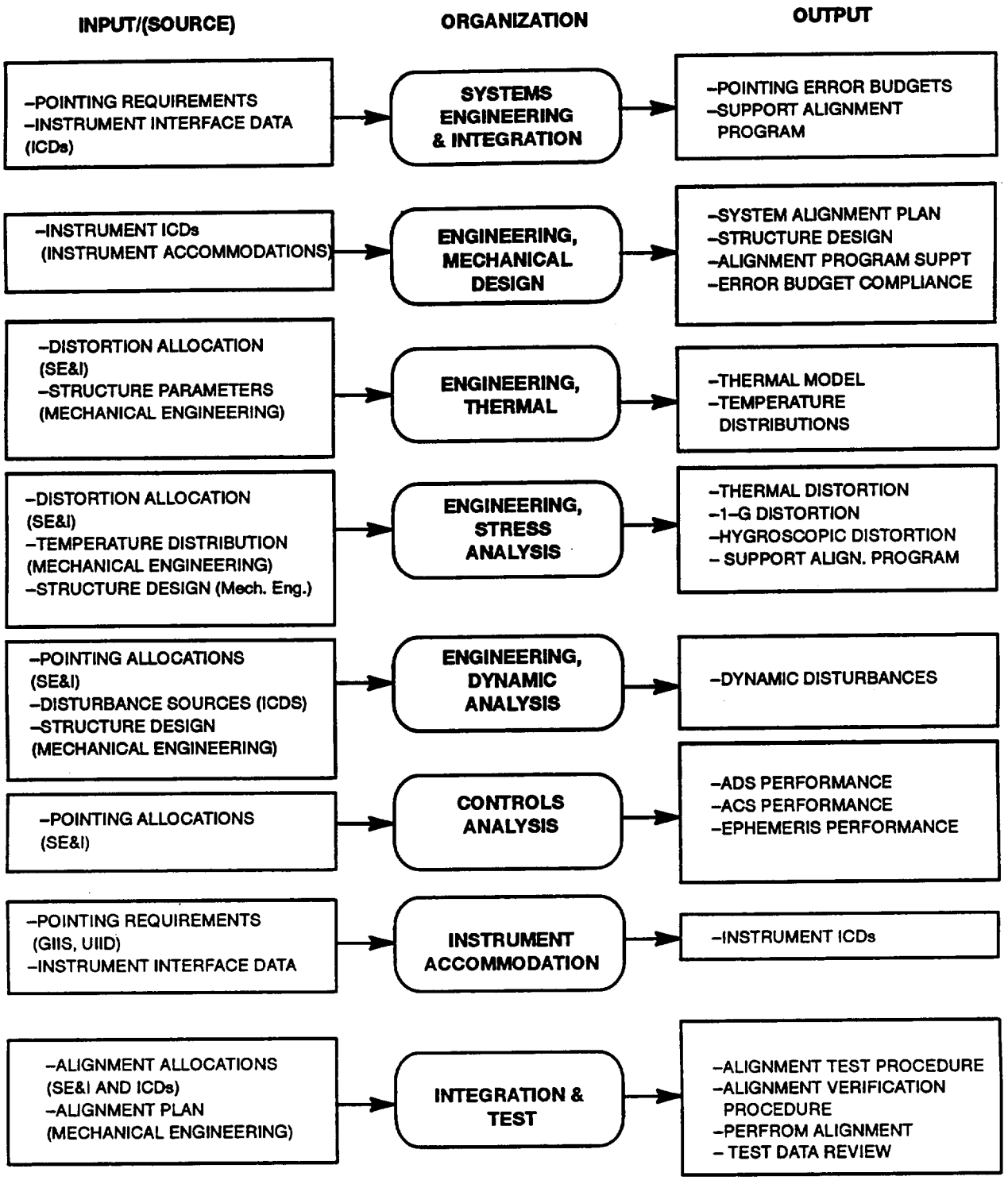

Figure 1. Martin Marietta Astro Space Organizational Responsibilities

e. Using predicted thermal distribution data as input to a Finite Element Model (FEM) of the EOS–AM Spacecraft, calculate the structural distortion and the consequent pointing errors developed at the instrument interface, due to changing thermal conditions. Perform similar analysis with different parameters to determine the hygroscopic distortion of the primary and secondary structure to be included in the pointing error estimate.

f. Calculate 1–G distortion predictions using a FEM which can then be compared with 1–G distortions measured during the alignment test program.

g. Support the alignment test program by providing analyses, as required, to verify the understanding of 1–G distortions and launch shift distortions.

h. Maintain the FEM of the EOS–AM Spacecraft orbital configuration which is appropriate for use in evaluating the structural responses at IACs.

i. Utilize the FEM and disturbance torque inputs to calculate the effect on pointing accuracy at the IAC.

j. Define the instrument/structure mechanical fastening, pinning, and shimming methods required for establishing and maintaining accuracy within budget allocation.

k. Support generation of the alignment test and alignment verification procedures.

l. Support mechanical installation and alignment activity during instrument integration.

m. Comply with accuracy allocations specified in the UIIDs and Instrument ICDs for each instrument.

n. Conduct a review of the alignment test results to verify that the instrument alignment requirements have been met. Document test results in final report.

2.1.3 Astro Space Integration and Test (I&T) Group

a. Support in the generation of this document, the EOS–AM Spacecraft Alignment Plan (PN20008660).

b. Generate the EOS–AM Spacecraft alignment verification procedures which delineates the step–by–step alignment process for each instrument.

c. Integrate and verify the position of each instrument component relative to its specified reference.

d. Establish the position of each IAC relative to the specified reference (MRC) within the budget allocation.

e. Demonstrate that the positioning error associated with instrument removal and replacement is within the budgeted allocation (alignment program).

f. Demonstrate that the positioning error associated with the launch environment (i.e., launch shift) is within the budgeted allocation (alignment program). Demonstrate that the projected Instrument pointing in the 0–G environment can be achieved and that the associated pointing uncertainty is within the budgeted allocation.

g. Demonstrate the end–to–end alignment of the IAC to the MRC.

2.1.4 Astro Space Instrument Accommodations Group

a. Develop and maintain the Instrument ICDs.

2.1.5 Instrument Providers

a. Develop instrument pointing requirements.

2.1.6 GSFC

a. Provide periodic evaluations of the Astro Space alignment plan and procedure.

2.2 Planning

The planning of the end–to–end EOS–AM Spacecraft alignment program will be aided by periodic meetings and review of alignment plans, by schedules identifying major milestones of the EOS–AM Spacecraft program, and by documents which specify the details of the alignment and verification procedures.

2.3 Applicable Documents

The documents listed below are the major documents which establish the alignment requirements and define the plans for achieving those requirements. They will be referenced throughout the remainder of this plan as appropriate.

2.3.1 Government Documents

The following documents of the exact issue shown, form a part of this specification to the extent specified herein. In the event of conflict between the documents referenced herein and the contents of this specification, the contents of this specification shall be considered a superseding requirement.

NASA Documents

GSFC 420–03–02	General Instrument Interface Specification (GIIS)
GSFC 421–12–11–01	ASTER Unique Instrument Interface Document (UIID)
GSFC 421–12–12–02	CERES UIID
GSFC 421–12–03–02	MISR UIID
GSFC 421–12–04–01	MODIS UIID
GSFC 421–12–15–02	MOPITT UIID

2.3.2 Non–Government Documents

Unless otherwise specified, the following documents of the latest issue form a part of this specification to the extent specified herein.

Martin Marietta Astro Space

PS20001407	Critical Item Development Specification for EOS–AM Spacecraft GN&C Sensor Equipment Module
PS20001409	Critical Item Development Specification for EOS–AM Spacecraft GN&C Reaction Wheel Assembly Equipment Module
PS20004937	Performance Specification, Guidance, Navigation and Control, EOS–AM Spacecraft
PS20005396	EOS–AM Spacecraft Contract End Item (CEI) Specification
20008810	ASTER Interface Control Document
20008820	CERES Interface Control Document
20008830	MISR Interface Control Document
20008840	MODIS Interface Control Document
20008850	MOPITT Interface Control Document
Source:	Martin Marietta Astro Space P. O. Box 800 Princeton, NJ 08543–0800

2.3.3 References

1. "EOS Pointing Error Budget, Prediction & Verification Concept," EOS–DN–SE&I–043, Martin Marietta Astro Space

(This page intentionally left blank.)

3 MECHANICAL ALIGNMENT PROCEDURE

The following section describes the philosophy of alignment for the EOS–AM Spacecraft alignment critical components and the major considerations to be addressed in order to ensure proper mechanical alignment.

3.1 Spacecraft Pointing Specifications

The EOS–AM Spacecraft has two alignment related pointing specifications

a. Pointing knowledge at the instrument interface must be less than 90 arc–sec per axis, 3σ, per the EOS–AM Spacecraft CEI Specification (PS20005396)

b. Pointing accuracy at the instrument interface must be less than 150 arc–sec per axis, 3σ, per the EOS–AM Spacecraft CEI Specification (PS20005396)

c. Pointing knowledge at the NBC will be in accordance with the GN&C Performance Specification (PS20004937)

d. Pointing accuracy at the NBC will be in accordance with the GN&C Performance Specification (PS20004937)

3.2 Spacecraft Assembly

The EOS–AM Spacecraft primary structure consists of a graphite/epoxy truss, to which are assembled a number of node fittings to which assemblies can be attached. The primary structure constitutes a rigid, stable structure from which alignment measurements can be referenced. A redundant reference optical cube is mounted on a stable structure near the NBC port, and is designated the Master Reference Cube.

3.3 Primary Structure Optical Cubes Installation and Alignment

This section serves to establish the absolute orientation between the MRC and the spacecraft axes. During this program the primary structure shape will also be characterized.

A quantity of (TBD–1) temporary primary structure optical cubes will be installed while the primary structure is clamped in the Manufacturing Assembly Fixture (MAF). The following steps are planned:

a. Install the MRC and back–up MRC and record the orientation relative to the MAF cubes. This determines the orthogonal spacecraft axes.

Note: The MAF cubes define the primary structure axes. At this point the MRC is aligned to the spacecraft axes and the MAF cubes can be removed. The MRC will be placed in a structurally stable location as determined by FEM analysis.

b. Install the primary structure optical cubes and record each orientation relative to the MRC.

c. Unclamp the primary structure and remeasure the optical cubes

d. If the released alignment data is within the budget specified in Ref. 1 of the clamped data, then the primary structure will be reclamped in the MAF. If the budget is exceeded, then shims will be added to obtain the clamped state shape before reclamping.

e. Repeat steps c and d as necessary in order to verify that the allocation has been met.

3.4 0–G Alignment

The 0–G alignment of the spacecraft is a process which involves all alignment critical areas of the spacecraft, the GN&C Sensor EM, instruments, etc. The 0–G alignment process is presented in this one section for clarity and to avoid repetition of the information. The following steps are planned:

a. Mount the Drill/Alignment Fixtures (DAFs) on the unclamped primary structure while it is in the MAF

b. Measure and record the DAF cube relative to the MRC

Note: This is the "0–G" state of the spacecraft.

c. Place the primary structure with DAFs in the horizontal orientation in the Three–Axis Positioner

d. Just prior to the flight assembly installation, eg., instrument, GN&C Sensor EM, measure and record the DAF cube relative to the MRC

Note: This quantifies the gravity effect on the spacecraft.

e. Remove the DAF; install the flight assembly on to the structure.

f. Measure the alignment cube, eg., IAC, NBC, to the MRC.

Note: The difference between steps d and b defines the gravity effect at the spacecraft interface. This effect is subtracted from the instrument cube reading in step f to determine the predicted 0–G alignment data.

3.5 GN&C Sensor EM Alignment

This section serves to establish the absolute orientation between the NBC and the MRC. During this program the orientation between the Star Trackers and the IRU on the Navigation Base Plate (NBP) will be established. This knowledge will be used later to implement software calibrations.

The following events occur during the Spacecraft alignment and verification phase.

a. Mount the GN&C Sensor EM DAF on the spacecraft and nominally locate it on its specified spacecraft node fittings.

b. Clamp and drill the alignment plates; remove the DAF

Note: The use of alignment plates, used successfully in the UARS alignment program, is introduced to prevent damage to the primary structure node fittings in the event of re–alignment after drill. Alignment plates are used on all spacecraft alignment critical interfaces.

c. Place the NBP on the spacecraft.

d. Place the NBC on the NBP and measure/adjust it to the MRC. Roll and pitch alignment will occur by shimming the interface between the kinematic mounts and the alignment plates.

e. Remove the NBP and return it to the GN&C Sensor EM I&T flow.

The following events occur during the GN&C Sensor EM alignment and verification phase:

a. Place the IRU DAF on the NBP

b. Measure the IRU drill template cube to the NBC

c. Adjust the drill template to obtain the desired orientation in yaw axis, clamp and drill.

d. Place the star tracker bracket drill template on the NBP

e. Adjust the drill template to obtain the desired orientation in yaw axis, clamp and drill.

f. Mount the IRU and star trackers on the NBP

g. Measure the IRU and star tracker cubes to NBC and record.

The errors associated with this program are:

a. Measurement error.

b. The remate error between the NBP and the kinematic mounts will come into effect when the NBP is removed from the Spacecraft for any I&T related issue and the alignment cubes are not remeasured.

c. Gravity and facility/handling error.

3.6 Instruments

3.6.1 Instrument Pointing Requirements

For the EOS–AM Spacecraft, the instrument pointing requirements will be met by providing a specified pointing knowledge and placement at the instrument mounting interfaces. It will be the responsibility of the instrument provider to determine that the performance requirements of his instrument will be met when the instrument is attached to its kinematic mounts or Instrument Mounting Plate (IMP).

It will be the responsibility of Astro Space to align IACs to the MRC to the required specifications.

3.6.2 Instrument Interfaces

There are two types of instrument interfaces: direct mount instruments which interface directly to kinematic mounts on the primary structure, and plate mounted instruments which interface to an IMP. Figure 2 shows typical kinematic mount interfaces to the primary structure. Figure 3 shows a typical plate mounted instrument interface to the primary structure. This figure also points out the shimming plane at the interface between the kinematic mount and the alignment plate. Figure 4 shows the relative placement of the IAC to the MRC and to the NBC along with the critical interfaces being discussed.

The pointing error sources will be discussed in Section 4 along with their respective verification plans.

3.6.3 Instrument Alignment

The Spacecraft I&T and alignment flow is outlined in Figure 5. This process can be broken out into four major tasks as follows:

Phase–1: Yaw Alignment and Initial Pitch and Roll Alignment

This takes place during the Manufacturing phase of the Primary Structure while on the MAF. The MRC has been located on a stable location on the primary structure and its placement is referenced to the MAF so that it represents the Spacecraft reference axes. At this point, equipped with flight IMPs and their respective DAFs (templates which establish the hole pattern for the instrument that mounts on that plate), and with DAFs for direct mount instruments, yaw alignment and initial pitch and roll alignment can be established between the MRC and the DAF cube.

During this phase of the program, the initial instrument mount pitch and roll shimming requirements will be established based on alignment data provided by the instrument provider with the DAF and documented in the instrument ICD.

a. Place the DAF on the IMP (for plate mounted instruments) which is mounted on the primary structure. For direct mount instruments, mount the instrument DAF directly on the primary structure. This is shown in Figure 6.

b. Measure the angles between the MRC and DAF cube.

c. Adjust the DAF to obtain the desired orientation in the Yaw axis and clamp. Drilling can now take place. Pitch and roll shims can be adjusted at this point if required. The adjustment will be made at the kinematic mount to alignment plate interface.

The pointing errors associated with this process are:

a. The measurement accuracy between the MRC and the instrument DAF cube.

b. The positioning accuracy associated with drilling the Instrument DAF guide bushings.

c. The remate accuracy between the IMP or instrument and the kinematic mounts (KMs).

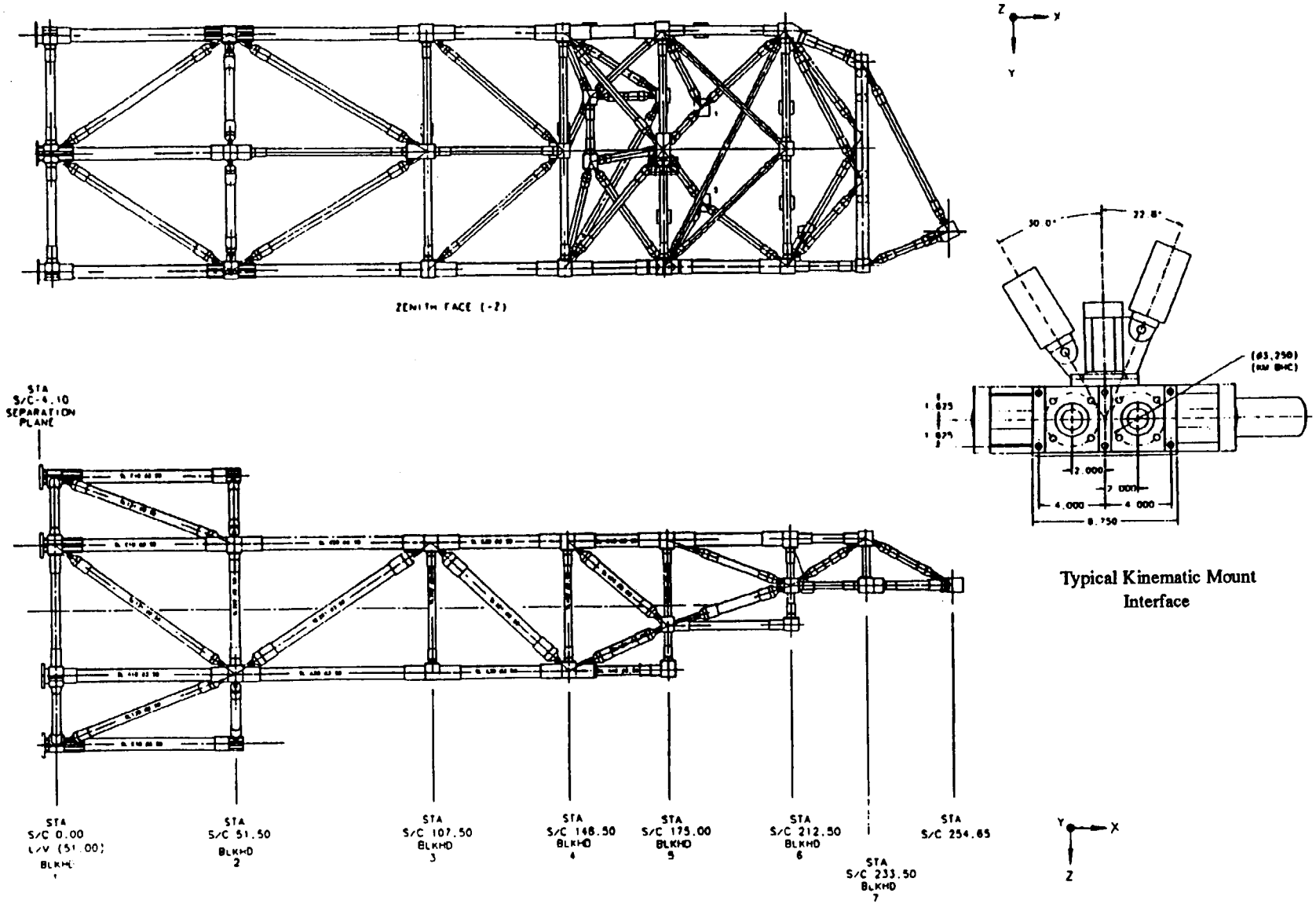

Figure 2. EOS AM Primary Structure

DCC082793

PN20008660
30 August 1993

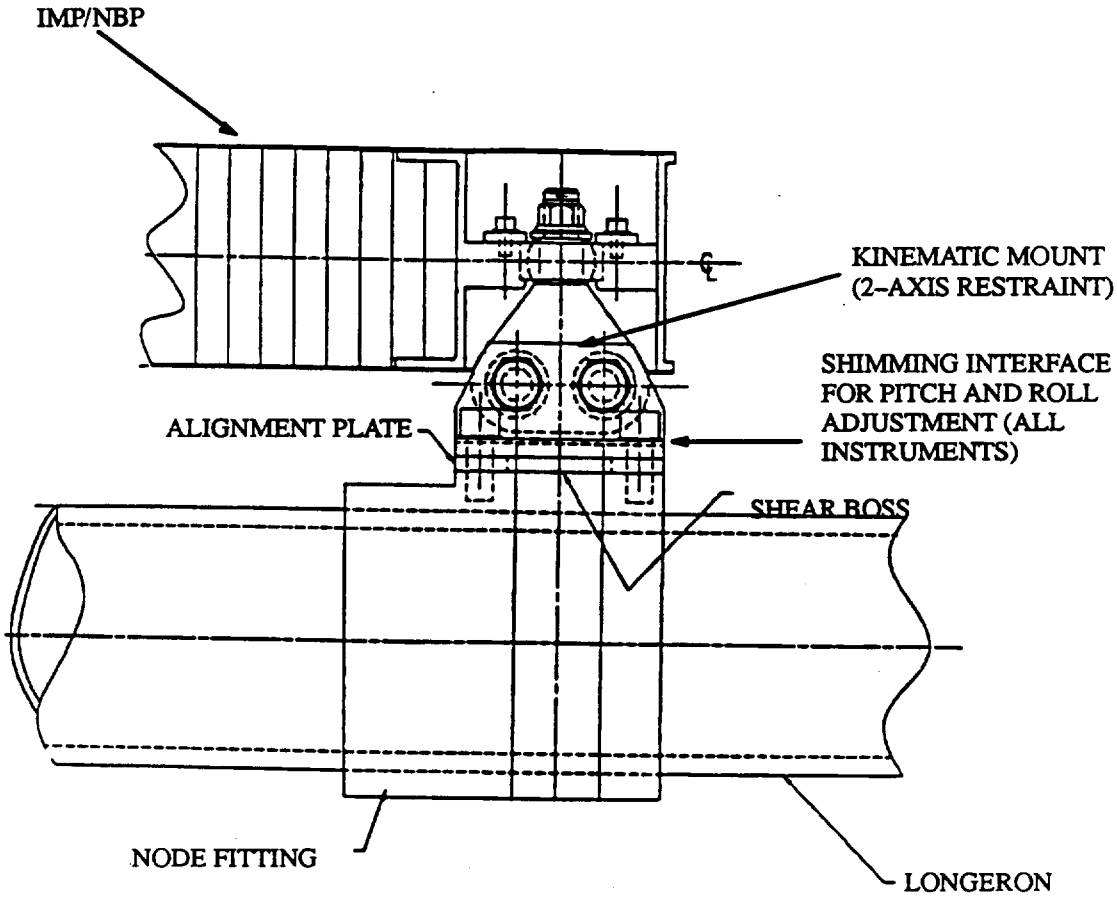

Figure 3. IMP Interface

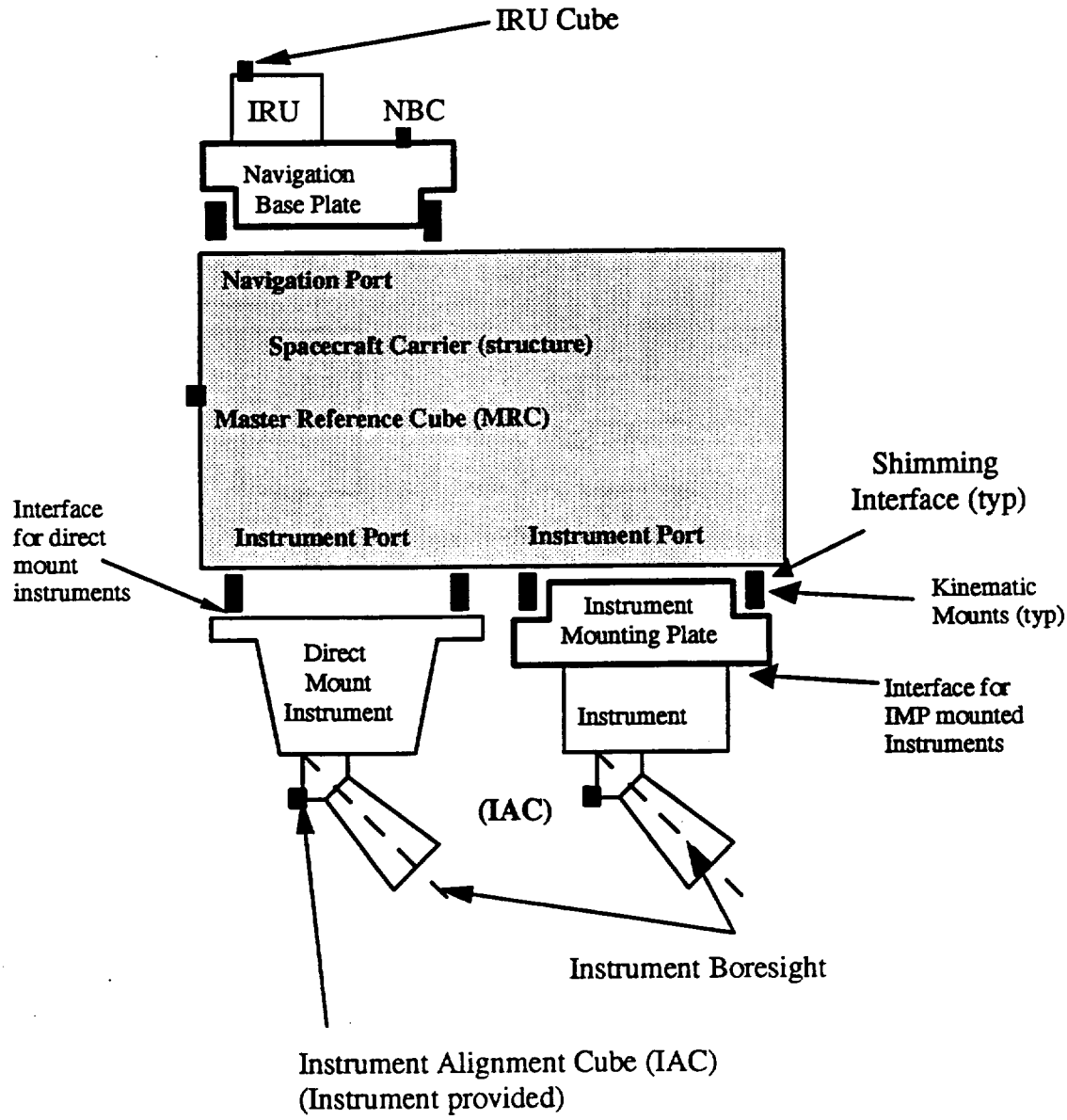

Figure 4. Pre–alignment Configuration

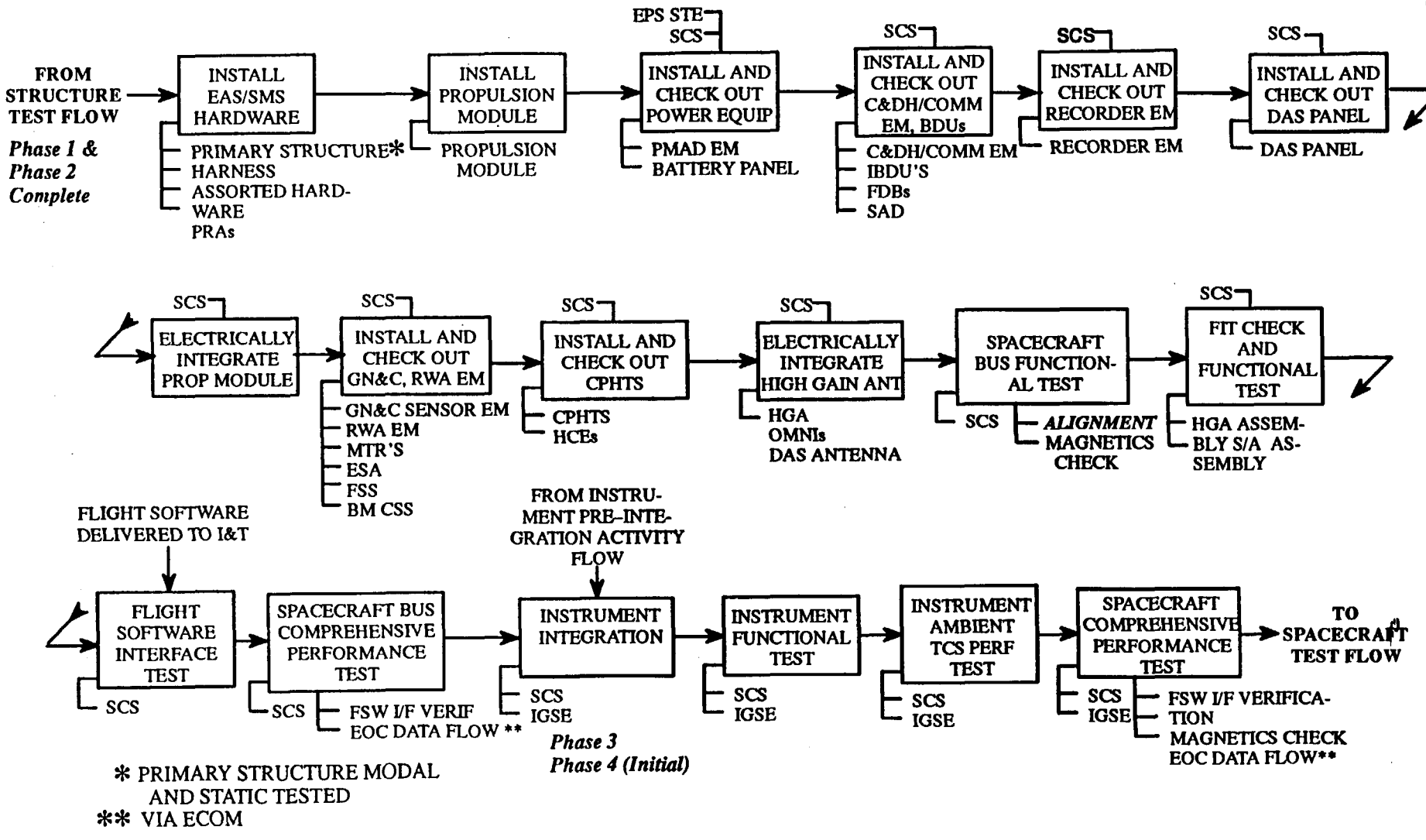

Figure 5. Spacecraft I&T Flow and Alignment Phases (Sheet 1 of 2)

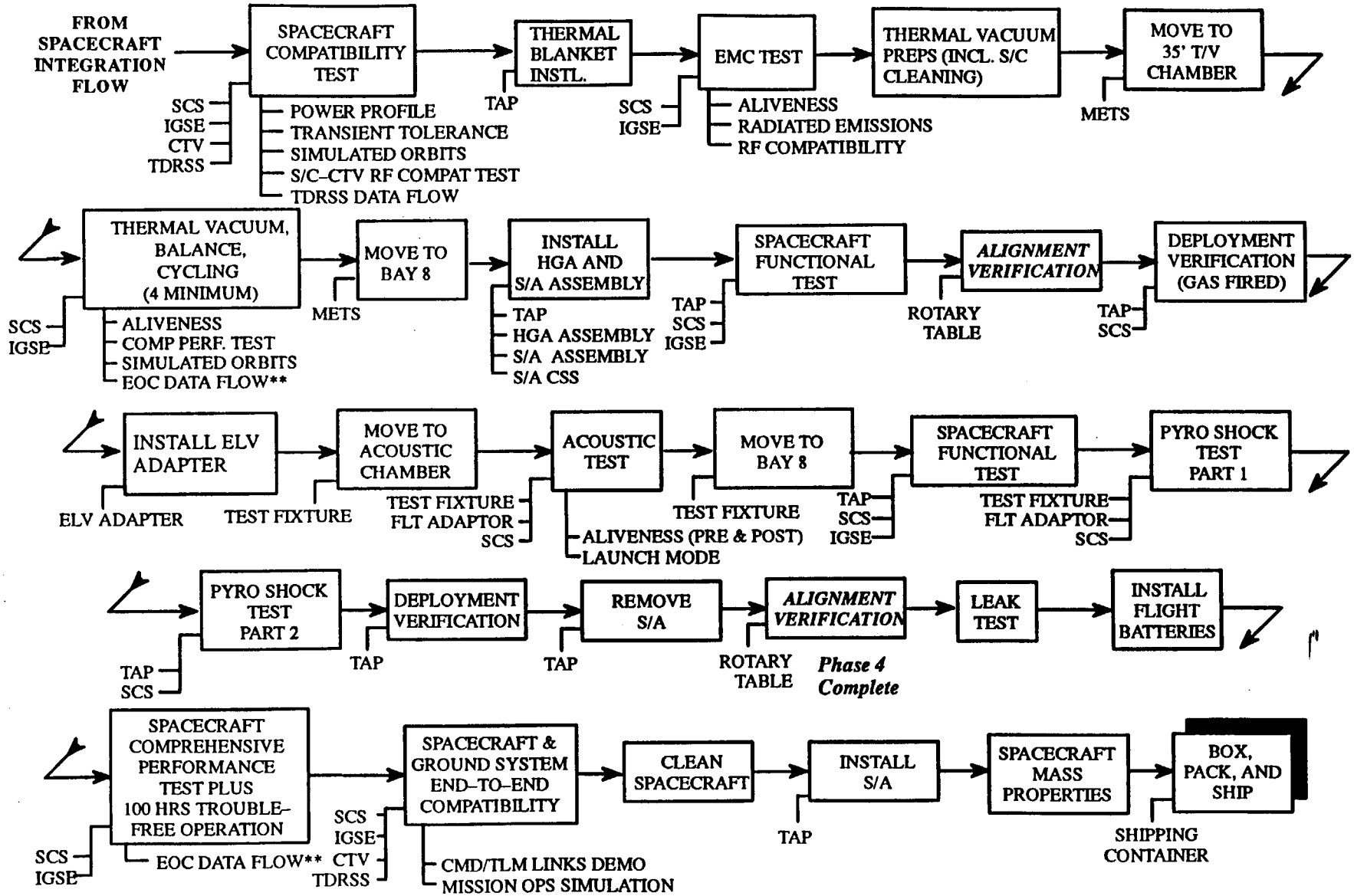

** VIA ECOM

Figure 5. Spacecraft I&T Flow and Alignment Phases (Sheet 2 of 2)

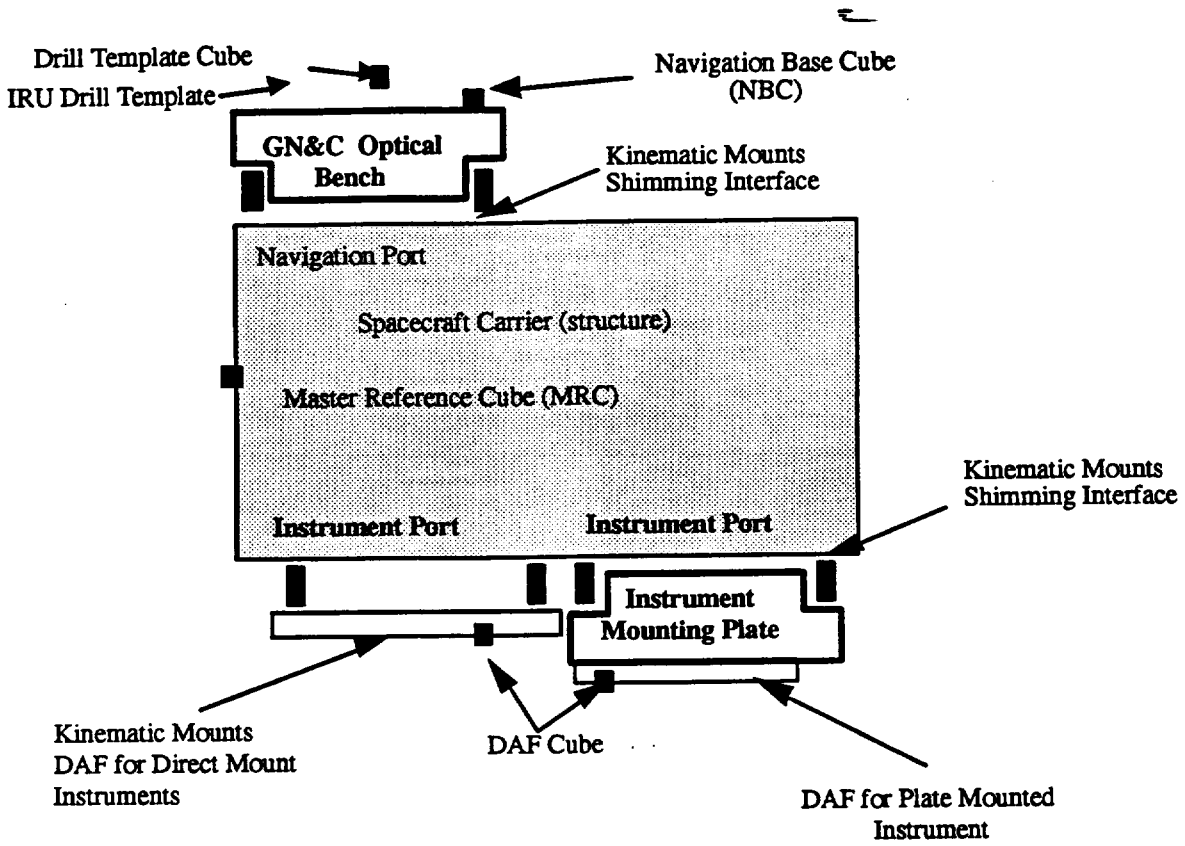

Figure 6. Yaw Axis Alignment

d. The residual stresses due to the clamping of the primary structure to the MAF.

e. The measurement accuracy between the MRC and the IRU drill template cube.

f. The positioning accuracy associated with drilling the IRU template guide bushings.

g. The remate accuracy between the GN&C optical bench (NBP) kinematic mounts and the node fittings on the primary structure.

Phase–2: Alignment Test Development Program

This phase is part of the environmental testing and verification of the primary structure. This consists of outfitting the primary structure with mass simulators and performing a series of tests that will characterize the various errors associated with the ground alignment testing such as gravity effects for both horizontal and vertical Spacecraft orientations, handling fixture induced distortions, kinematic mount remate errors and launch shift. This data will be used during the alignment phase to insure that gravity and handling fixture induced errors are accounted for and kept within the allocated budget. These characterizations will be made before and after environmental testing.

Phase–3: Alignment

The Spacecraft primary structure has the NBP/NBC mounted to it, and it also contains the MRC. A node fitting outfitted with kinematic mounts which have been pre–aligned during phase–1 using drill templates is ready to accept an instrument for alignment. Likewise, an IMP is also ready to accept a plate mounted instrument for alignment.

The instrument will be aligned to the MRC to the specified positioning allocations presented in the applicable UIID.

The DAF will be installed just prior to the instrument installation so that the DAF cube orientation can be compared to the measurement during 0–G alignment to determine the distortion offsets of the interface.

This is the phase where the flight instruments are integrated to the Spacecraft Bus and the final roll and pitch alignment of the IAC to the MRC is conducted by shimming at the kinematic mount interface to the alignment plate. This step is conducted with the Spacecraft in the horizontal orientation to facilitate the integration and alignment process. See Figure 7.

a. For direct mount instruments, mount the instrument to the kinematic mounts. For plate mounted instruments, mount the instruments to the IMP.

b. Measure the angles between the MRC and the IAC.

c. Shim the instrument mounts to properly align the IAC to the MRC in the pitch and roll axes based on previously recorded data and instrument provided information. The shimming interface is between the kinematic mounts and the alignment plate.

The position errors associated with this step are:

a. Measurement error

b. Positioning error due to shim thickness resolution

c. Portion of the gravity and handling fixture error that has been included in the budget due to the uncertainties in establishing this contribution.

d. The kinematic mount remate error in the event that the instrument is removed and not remeasured at any time during the integration and test phase.

Phase–4: Alignment Verification

Once the instrument alignment is completed, the verification test will be conducted with the Spacecraft velocity axis ("X") oriented vertically (Figure 8) in order to minimize the gravity induced distortion effects and to check that the compensation that was applied during the horizontal alignment is within the allocated budget. Alignment verification will be performed again after the Spacecraft level acoustic

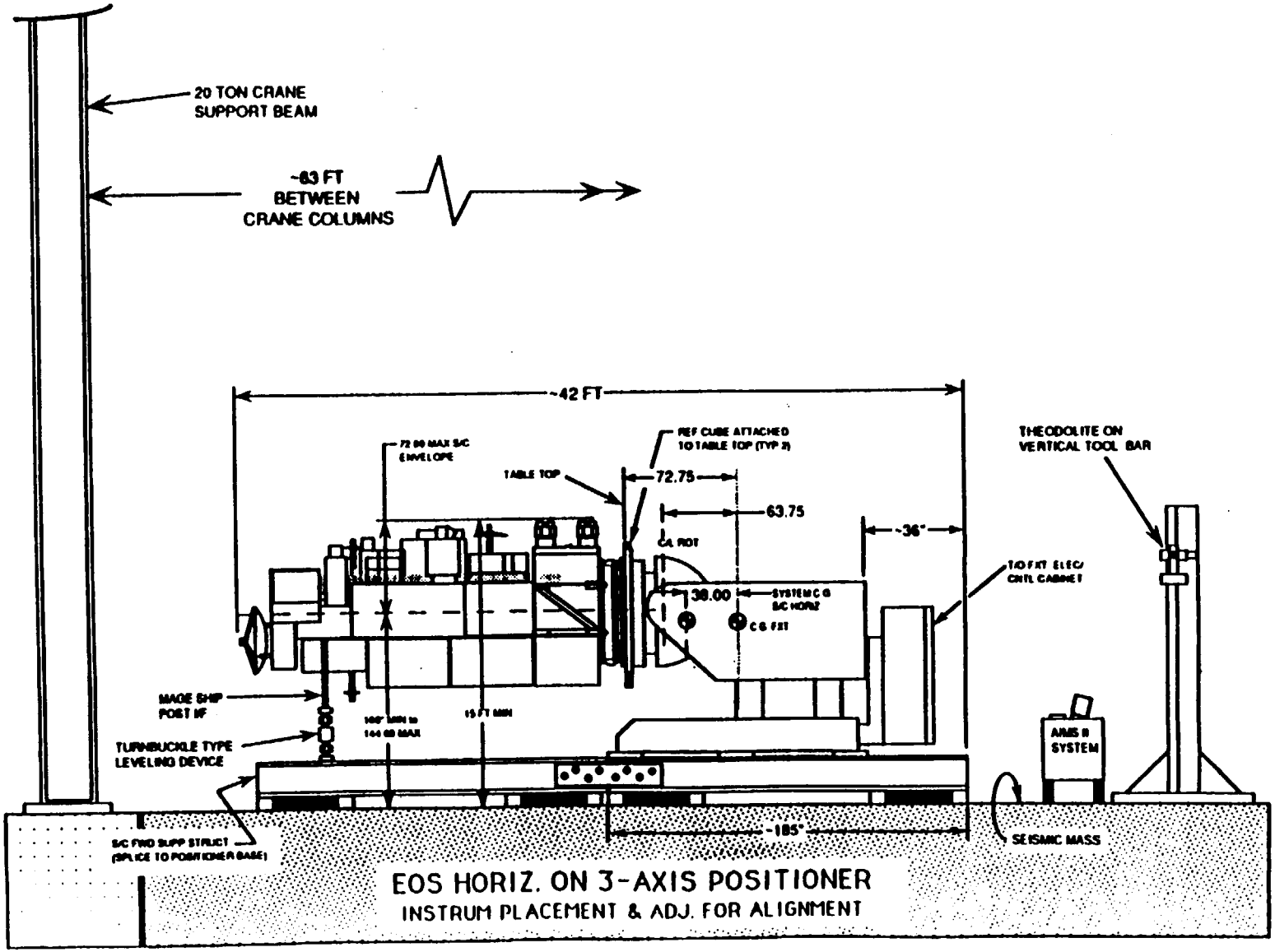

Figure 7. EOS AM Instrument Placement and Alignment Configuration

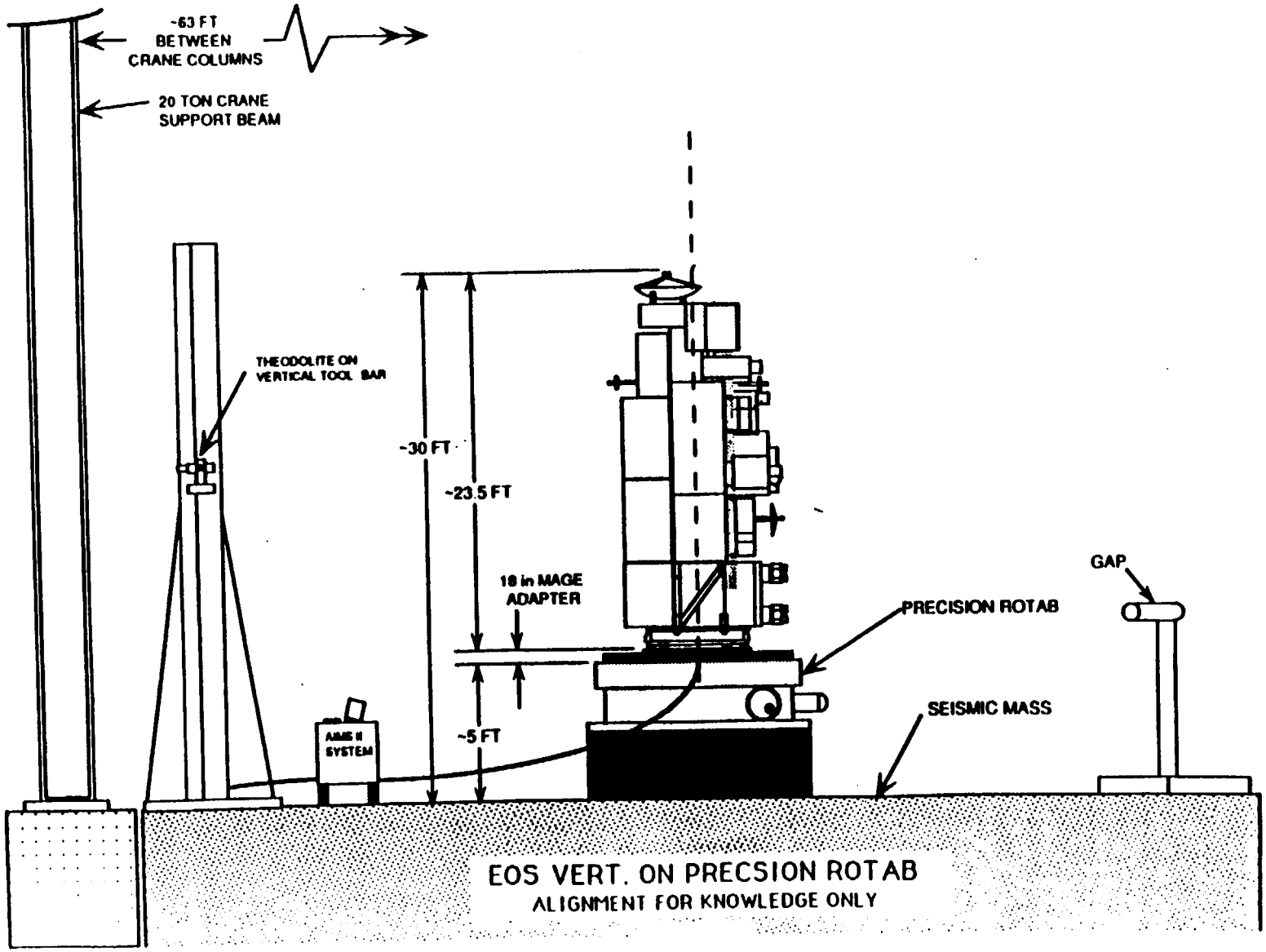

Figure 8. EOS AM Vertical Alignment Verification Configuration

test to verify that the environmental induced shifts are within the values allocated. In the event that an anomaly would result in these measurements, a full investigation of all the available test data and analytical predictions would be conducted to pinpoint the source of the problem. The Spacecraft would then be returned to the horizontal configuration (desired orientation for processing) and further corrections would be made. This loop would continue until the anomaly is resolved and the budgets are met.

The final post alignment condition of the Spacecraft has an instrument whose IAC has been aligned to the MRC. The IAC has a known orientation to the Instrument boresight. This is the responsibility of the Instrument Provider and this information is provided to Astro Space via the instrument ICDs. The NBC has a known orientation to the MRC and the NBC would have a known orientation to the IRU and Star Tracker cubes which would have been established during the GN&C Sensor EM alignment phase. This is the responsibility of Astro Space I&T group.

The errors implied by the structural chain, which originates at the NBC and includes the NBP, kinematic mounts, primary structure, instrument support structure to the instrument interface, would have been accounted for in the allocations presented in Ref. 1 . Errors from the instrument interface to the IAC and from the boresight to the IAC are the responsibility of the Instrument Provider.

3.7 Component Specific Alignment

This section outlines the alignment information specific to each alignment critical component.

3.7.1 Instruments

IAC locations and the kinematic mounts used to determine the XY–plane discussed in this section were determined from the applicable instrument ICDs.

3.7.1.1 ASTER–SWIR

SWIR uses a 6–point mounting scheme. For the purposes of roll and pitch adjustment the XY–plane is defined by the 3–axis, 2–axis and the +X +Y 1–axis kinematic mount. The remaining kinematic mounts will be shimmed to remove any gap and eliminate chatter without inducing undue stresses in the instrument.

The IAC is located in the center along the –Y side of the baseplate. The IAC will be visible from the –Y and +Z directions. Visibility of the +X face is blocked by TIR and the –X face is blocked by MISR (**TBR–1**).

3.7.1.2 ASTER–TIR

TIR uses an 8–point mounting scheme. For the purposes of roll and pitch adjustment the 3 kinematic mounts used to define the XY–plane are (**TBD–2**) with the remaining 5 kinematic mounts being shimmed to remove any gap and eliminate chatter without inducing undue stresses in the instrument.

The IAC is located on the +Z surface near the baffle. It will be visible from +X, –Y and +Z directions.

3.7.1.3 ASTER–VSR

VSR is a multi–point plate mounted instrument. The VSR IMP XY–plane will be defined by the 3–axis, 2–axis and the +X, –Y 1–axis kinematic mount. The remaining three 1–axis mounts will be shimmed to remove any gap and eliminate chatter without inducing undue stress in the IMP.

The VSR IAC is located on the –X end of the +Z surface. The IAC will be visible from the +Y and +Z. The ±X faces are not visible due to blockage from MOPITT on the –X side and from VSR itself and TIR from the +X side.

3.7.1.4 CERES

CERES is a multi–point plate mounted instrument. The CERES IMP XY–plane will be defined by the 3–axis, 2–axis and the –X, +Y 1–axis kinematic mount. The remaining three 1–axis mounts will be shimmed to remove any gap and eliminate chatter without inducing undue stress in the IMP.

The IAC is located in the –X +Z quadrant of the –Y face of each CERES instrument and is visible from ±X, –Y and +Z directions.

3.7.1.5 MISR

MISR uses a 4 point mounting scheme. For the purposes of roll and pitch adjustment, the XY–plane is defined by the 3–axis, 2–axis and the –X +Y 1–axis kinematic mount (mount opposite the 3–axis mount). The remaining 1–axis mount will be shimmed to remove any gap and eliminate chatter without inducing undue stresses in the instrument.

The IAC is located on the baseplate near the 3–axis mount. It will be visible from –Y and +Z. Visibility from +X may not possible due to blockage from TIR and self–blockage will prevent visibility from –X.

3.7.1.6 MODIS

MODIS uses a 3 point mounting scheme which uniquely defines the XY–plane for the purposes of roll and pitch adjustment.

The IAC is located on the –Y face above (+Z) the 3–axis mount **(TBR–2)**. The cube is visible from +X, –Y and +Z directions.

3.7.1.7 MOPITT

MOPITT uses a 3 point mounting scheme which uniquely defines the XY–plane for the purposes of roll and pitch adjustment.

The IAC is located on the +Y half of the –X edge of the baseplate. The +Y and +Z faces of the cube will be visible. The ±X faces will not be visible due to blockage from the hexbay (bay 1) in the –X direction and the MOPITT instrument itself from the +X direction.

3.7.2 GN&C Components

3.7.2.1 Fine Sun Sensor (FSS)

The FSS Head will be mounted to a bracket located on the external –Y face of the Power EM in the –X, –Z corner.

The alignment details for the FSS Head are **(TBD–3)**.

3.7.2.2 Earth Sensors

The 2 Earth Sensors Scanners will be mounted on a bracket which is located on the aft (CERES) IMP using positional tolerancing. The optical flats on the Earth Sensors Scanners will be used to obtain pointing knowledge information.

3.7.2.3 Solid State Star Trackers (SSSTs)

The SSST bracket which supports both SSSTs will be located on the NBP using positional tolerancing. The optical cubes will be used to obtain pointing knowledge information. The cubes will be aligned such that one surface will be parallel to the lens surface.

The pointing knowledge of the SSSTs relative to the NBC will be obtained during the GN&C Sensor EM alignment program. At the spacecraft level, the SSST cubes will be visible with the GN&C Sensor EM shell on and with the SSST light shades removed. This will allow the the cubes to be seen through the EM shell light shade cut–outs; however, only the surface parallel to the lens will be visible. From each cube, pitch and yaw (about the SSST axes) information can be obtained. Roll (about the SSST axes) information can be extracted from the combination of the two cubes. No shimming is planned at the bracket to NBP interface.

3.7.2.4 Inertial Reference Unit (IRU)

The IRU will be located on the NBP using positional tolerancing. The optical cube will be used to obtain pointing knowledge information. The pointing knowledge of the IRU relative to the NBC will be obtained during the GN&C Sensor EM alignment program. At the spacecraft level, 2 surfaces of this cube will be visible through cut–outs in the GN&C Sensor EM shell.

3.7.3 Communication Components

3.7.3.1 High Gain Antenna (HGA)

The HGA hinge will be located using positional tolerancing. An optical cube located on the boom at or near the boom to gimbal interface will be used to obtain pointing knowledge information of the interface in the deployed position.

The HGA subcontractor, SPAR, is responsible for the alignment of the HGA boresight to the gimbal interface.

3.7.4 Propulsion Components

3.7.4.1 Rocket Engine Assembly (REA)

The REAs will be located on the propulsion module base panel and each engine will be located using positional tolerancing. The optical cubes will be used to obtain pointing knowledge information. Shimming of the REA is not anticipated.

(This page intentionally left blank.)

4 ALIGNMENT VERIFICATION

The EOS–AM Spacecraft end–to–end alignment program is implemented during a period which begins during the manufacturing and assembly of the primary structure, and ends with the final alignment check of the instrument assemblies on the Spacecraft bus after environmental testing.

4.1 Manufacturing Stage

The manufacture of the EOS–AM Spacecraft structure and associated assembly fixtures reflects the critical alignment requirements of the EOS–AM Spacecraft instruments. The structure materials are selected to minimize on–orbit thermal distortion, and the assembly fixtures will be manufactured to tolerances which assure that the NBP and critical pointing components can be integrated with precision.

4.2 Alignment Test Program

The overall objective of the alignment test program is to qualify the protoflight carrier structure. The specific objectives of the alignment test program which contribute to the EOS–AM Spacecraft end–to–end alignment are:

a. Demonstrate the alignment procedures, equipment, and facilities.

b. Provide the necessary data needed to verify the following elements critical to validate the alignment method:

   1. 0–G alignment characterization of the spacecraft structure and interfaces
   2. Component placement, i.e., 1–G effects.
   3. Removal and re–installation of major components/instruments.
   4. Shifts due to the launch environment induced hysteresis.
   5. Shifts due to fixturing and handling.

4.2.1 Alignment Measurements and Environmental Tests

As shown in Figure 5, the post–assembly portion of the alignment test is a sequential set of activities which combine alignment measurements and environmental tests.

The objective is to obtain data for use in understanding and evaluating the effect of simulated environmental conditions on the various instrument alignments and to determine if the measurable elements of the pointing budgets are appropriate. The elements of the alignment test program discussed below follow the order of the alignment test activities shown in Figure 5.

a. **Pre–alignment test activities**

   1. Check–out of the assembly and test area facilities, and the test equipment.

2. Measurement of all alignment cubes relative to the MRC, with all mass simulators mounted, in the various test configurations to characterize gravity and fixture effects.

3. Investigate the alignment shift induced by demate and remate of the mass simulators. During this activity an appropriate number of installations of various mass simulators will be conducted to obtain a statistically significant result.

b. **Pre/Post Environmental Alignment Test**

Measure the magnitude of the alignment shifts induced by transporting the Spacecraft between test areas and by the test environments. The Spacecraft will be maintained at a fixed orientation in the test fixture, and all cubes will be measured relative to the MRC for comparison with the pre–acoustic baseline.

c. **Spacecraft Modal Survey**

Determine the structural modes, damping and natural frequencies of the carrier structure. These data will be used to validate the FEM of the carrier.

d. **Spacecraft Static Load Test**

Verify the design strength, and stiffness and obtain hysteresis data of potential alignment shifts induced by the launch environment

The installation and alignment of the flight instrument will be relatively straightforward based on a successful alignment test program.

4.3 Verification by Measurement

Items analytically estimated in the budget can be measured to validate models. Once established, these models can be used to improve inferred pointing knowledge.

4.3.1 Remate Errors

The removal of an component or assembly from its kinematic mounts or from its mounting plate and subsequent remounting must be accomplished without a realignment procedure. The remating accuracy and repeatability will be established during the alignment test program by measurement of the original position relative to its re–mounted position. This will be conducted for kinematic mount interfaces as well as plate mounted interfaces.

4.4 Verification by Analysis

Several elements of the pointing budget cannot be verified by measurement during the ground alignment process due to complexity, cost, or time constraints. These elements will be verified by analysis.

4.4.1 Structural Dynamics

Structural distortions between the NBC and the IAC, due to Spacecraft flexibility in orbit under various dynamic loadings will be analytically predicted.

The effect of slew motions of the EOS–AM Spacecraft instrument assemblies and/or propulsion module will be verified by analysis. The torque characteristics of major disturbance sources are input to a FEM of the Spacecraft, and the resulting motions are calculated at the IMP locations. This analysis will be updated as required to reflect latest disturbance values.

4.4.2 Moisture Distortion

Static distortion due to changes from outgassing of composite structures, between the NBC and IMP will be analytically predicted.

A FEM of the structure is used to assess the structural distortion caused by the on–orbit outgassing of water vapor by the graphite/epoxy structural members. This analysis is based on conservative assumptions regarding exposure lifetimes, temperature and humidity conditions during exposure, and the coefficient of moisture expansion.

4.5 Verification by Analysis and Test Measurement

Verification by a combination of analysis and measurement is appropriate for several of the elements of the pointing budget.

4.5.1 Handling Fixtures and Facility Effects

Errors that occur from moving the Spacecraft from one facility to another and similarly from one handling fixture to another will be characterized.

4.5.2 Launch Shift

The shifting of components during launch is typically due to clearances around bolts, alignment pins, and hysteresis in the structure. Hysteresis will occur primarily from friction effects in mechanical joints.

Static load tests will be performed on the mass simulators at the IMP, direct mount instruments, and NBC node fitting during the alignment program, to verify stiffness and to identify potential alignment shifts. Acoustic testing, also conducted during the qualification test program, will be performed to expose the structures to protoflight dynamic environments. These data will be used to assess the magnitude of potential alignment shifts which may occur as a result of the launch vibration environment. Measurement of alignment shifts before and after these tests will be compared with budget allocations. The magnitude of alignment shifts resulting from acoustic tests will also be compared with hysteresis predictions generated by the FEM of the EOS–AM Spacecraft structure.

4.5.3 1–G Effects

Analysis and test will be used to determine errors in alignment between the MRC cube and the component cube from distortion of the structure due to gravity, during assembly. 1–G effects are predicted using a FEM of the EOS–AM Spacecraft structure and then compared with 1–G

measurements taken during the alignment test program. A datum or baseline for the 0–G condition of the primary structure will be established during its build–up in the MAF. Measured values of 1–G effects will then be used to fine tune the FEM. This process will validate the model predictions of 1–G effects, which can be compared with budget allocations.

4.5.4 Thermal Distortion

Thermal distortions may arise due to:

a. Structural asymmetry in the NBP structure. These distortions are dependent on the temperature gradients and thermal coefficients associated with the structure. These distortions are dynamic in nature, due to temperature fluctuations in orbit. However, a static portion remains throughout the orbit.

b. NBP KM distortion

c. Spacecraft primary structure distortion

d. IMP thermal distortion.

e. Instrument KM distortion

A combined thermal math model of the primary structure and IMP structures is used to determine a set of temperature distributions which bound the anticipated thermal gradients of the system. These gradients are applied on the Spacecraft FEM. Resulting distortions are then compared with the budget.

Thermal expansion and contraction testing will be performed on sample graphite epoxy tubes to verify their respective coefficients of thermal expansion (CTE). These CTE values will be used in the Spacecraft FEM to verify thermal distortions.

4.5.5 Measurement Accuracy

These errors are from theodolite positioning, equipment, and human interaction. They are verified by repeatability measurements on the alignment test. Analytically they are modelled using the RSS accumulation of errors from historical data.

Measurement accuracy can be verified analytically by identifying and properly combining all sources of measurement error. Measuring the angular relation of two optical cubes relative to a third cube on a common fixture will demonstrate that the measurement accuracy is within the analytically defined window. These verification measurements will be performed during the Alignment Test program.

4.5.6 Instrument Alignment Accuracy

Verification of alignment accuracy between the instrument boresight and the IAC and the IAC and the instrument interface to the Spacecraft is the responsibility of the instrument provider. This verification will be a combination of measurement and analysis.

4.5.7 On–Orbit Alignment Accuracy

Verification of the alignment calibration accuracy between a celestial target and an instrument boresight is the responsibility of each Instrument Provider participating in the on–orbit alignment calibration program. This verification will be a combination of measurement and analysis.

4.6 End–to–End Alignment Verification

A final step in the alignment program will consist of performing an end–to–end check of the alignment between alignment cubes and the MRC. This will be performed with the Spacecraft velocity axis oriented vertically to reduce the effects of gravity.

4.7 Alignment Program Verification

Table I is the alignment program Verification Matrix. This table shows the components and subsystems that Astro Space will be responsible for testing/analyzing along with the alignment error source associated with them. Indicated in this table also is the method of verification and at what phase in the program it occurs.

Table I. Alignment Test Program Verification Matrix

Level	Error Source	Method				
		Test				
			Inspection			
				Analysis		
					Demonstration	
						Phase
ALL	Meas. Accuracy	T		A		All
COMPONENT						
Kinematic Mounts	Repeatability	T				ETM/QTM
	Remate Accuracy	T				ETM/QTM
Primary Structure Tubes	Hygroscopic Dist.			A		Prelim. Design
	Thermal Dist.	T		A		Prelim. Design
SUBSYSTEMS						
Primary Structure	Hysteresis	T		A		Qual (Static Load)
	1–G Distortion	T		A		Alignment Program
	Hygroscopic Dist.			A		Prelim. Design
Attitude Determination System	Performance			A		Design
Attitude Control System Performance	Performance			A		
Ephemeris	Accuracy			A		Design
IMP/NBP	Thermal Dist.			A		Design
	Hysteresis	T		A		Qual (Sine Vib.)
	1–G Distortion	T		A		Qual (Static Load)
	Hygroscopic Dist.			A		Design
SYSTEM						
S/C	Thermal Dist.			A		Design
	1–G Distortion	T		A		Alignment Program
	Hysteresis	T				Qual (Acoustics)

5 FACILITIES AND EQUIPMENT

The facilities and equipment required for the Spacecraft assembly, testing, integration, and alignment are located at the Astro Space in Valley Forge (VF), PA, and in East Windsor (EW), NJ. The Spacecraft primary structure will be assembled at VF, with the alignment test program and instrument integration and test at EW.

5.1 Facilities

The assembly of the primary structure will occur in a Class 100,000 high bay clean room. Final alignment measurements will be performed in the EW assembly and test facility, which is a class 10,000 laminar flow clean room. This facility is serviced by a 55 foot hook–height bridge–trolley crane with 20– and 5–ton hooks on a common trolley. The test area floor size is 133 x 68 feet and contains a 70 x 45 foot isolation pad. Temperature and relative humidity within the assembly and test facility are controlled to within ±2°C and ±5% of their set points, respectively. These facility specifications will allow measurements to accuracies of ±1 arc–sec (1 sigma) as required to meet the instrument alignment requirements. In order to maintain the class 10,000 clean room specification, fabrication of the structure will not be performed in the assembly and test clean room.

5.2 Equipment

The equipment used in the instrument alignment and measurement will consist of the 3–Axis Positioner, a rotary table, theodolites, reference mirrors, and transfer mirrors as discussed below.

a. Sighting theodolites to be used for data acquisition. These are Class I instruments having measurement accuracies of better than 1 arc–sec.

b. One Cubic DT II instrument will have auxiliary laser optics to simplify the optical setup using transfer mirrors.

c. Several line–of–sight benchmark instruments, including decal targets, WildGAP 1 porroprism, Brumson or K&E jig transits, typically 3 arc–sec resolution.

d. Rotary table (13 ft dia; with 1 arc–sec accuracy) on which the Spacecraft will be mounted.

e. Electronic inclinometers.

f. Overhead transfer mirror assembly.

g. Lower transfer mirror assembly.

h. Tooling bars, stands, and elevators, as required.

(This page intentionally left blank.)

6 ACRONYM LIST

ACS	Attitude Control System
ADS	Attitude Determination System
CDRL	Contract Data Requirements List
CTE	Coefficient of Thermal Expansion
DAF	Drill/Alignment Fixture
DTC	Drill Template Cube
EM	Equipment Module
EOS–AM	Earth Observing System
EW	East Windsor, New Jersey
FEM	Finite Element Model
GIIS	General Instrument Interface Specification
GN&C	Guidance, Navigation and Control
GSFC	Goddard Space Flight Center
I&T	Integration and Test
IAC	Instrument Alignment Cube
IMP	Instrument Mounting Plate
IRU	Inertial Reference Unit
KM	Kinematic Mount
MAF	Manufacturing Assembly Fixture
MRC	Master Reference Cube
NASA	National Aeronautics and Space Administration
NBC	Navigation Base Cube
NBP	Navigation Base Plate
PI	Principal Investigator
PIR	Program Information Release
RSS	Root–Sum–Squared
SE&I	System Engineering and Integration
TBD	To Be Determined
TBR	To Be Reviewed
UIID	Unique Instrument Interface Document
VF	Valley Forge, Pennsylvania

(This page intentionally left blank.)

MARTIN MARIETTA
ASTRO SPACE

EOS-DN-SE&I-033 A

DESIGN NOTE

TITLE: EOS-AM FDIR Baseline

AUTHOR: Howard Silverman

AUTHOR'S MANAGER: Scott Carey **DATE** 8/9/93

SE&I MANAGER: Scott Carey **DATE** 8/9/93

CHIEF ENGINEER: Dennis Longcoy **DATE** 8/9/93

REVISIONS

LETTER	DESCRIPTION	DATE	AUTHOR
A	Update to reflect Spacecraft PDR design	8/6/93	HS

EOS Form 006-01/01/93

(This page intentionally left blank.)

MARTIN MARIETTA
ASTRO SPACE

DESIGN NOTE SUMMARY

DN#: EOS–DN–SE&I–033 **Revision:** A **Date:** 8/6/93

Title: EOS–AM FDIR Baseline

Author: Howard Silverman **Source ID (ESTA, PD, Memo, etc.):**

Purpose/Questions Answered:

Define EOS–AM FDIR baseline.

Summary/Answers:

A baseline implementation is presented that meets program requirements, capitalizes on heritage designs, and incorporates customer comments and preferences pertaining to FDIR design features previously presented.

The instruments and the PDU will no longer be autonomously notified that Earth oriented safe mode has been entered with the SCC still operating.

Recommendations: (Be Specific)	Accepted	Rejected	Baselined	Date
Provide answers to included questions in time for the applicable subsystem's CDR. Update this design note to reflect the answers to these questions				

Open Items/Action Required	Responsible Person	Due Date
The instrument's requirements for TMON support		
have yet to be established.		

Comments

Form Completed By _____ **Date** _____ **Page** ___ **of** ___

(This page intentionally left blank.)

TABLE OF CONTENTS

SECTION / PARAGRAPH	TITLE	PAGE
1	INTRODUCTION	1
1.1	Purpose	1
1.2	FDIR Definition	1
1.3	Design Evolution	1
1.4	Document Organization	1
2	GENERAL DISCUSSION	2
2.1	FDIR Partitioning	2
2.2	Ground Command Interaction	2
2.3	Instrument Notification	2
3	COMMAND AND DATA HANDLING SUBSYSTEM	2
3.1	1553 Bus Controller Error Detection	2
3.2	"IMOK"	2
3.3	Single–bit Error Correction, Double–bit Error Detection (SECDED)	3
3.4	Hot Spare Command Path	3
3.5	Synchronization Marker Detection	3
3.6	Backup CTIU Clock Source	3
3.7	Autonomous Switch of BDU Sides	3
4	FLIGHT SOFTWARE SYSTEM	3
4.1	EDAC	3
4.2	Task Completion Test	4
4.3	Major/Minor Cycle Count Synchronization	4
4.4	Command Path Check	4
4.5	Telemetry Monitor Service	4

TABLE OF CONTENTS (Continued)

SECTION / PARAGRAPH	TITLE	PAGE
5	GUIDANCE NAVIGATION AND CONTROL SUBSYSTEM	4
5.1	Acquisition Mode	5
5.1.1	Rate Nulling	5
5.1.2	Local Vertical Acquisition, Yaw Gyro Compassing, Stellar Acquisition	6
5.1.3	Update Filter	6
5.2	Orbit Adjust Mode	6
5.3	Science Mode	7
5.4	Safe Mode	9
5.5	Mode Independent GN&CS Features	9
5.5.1	Solar Array Rotation Feature	9
5.5.2	High Gain Antenna (HGA) Motion Feature	9
5.5.3	Navigation Algorithm Failures	9
5.5.4	ACE Watchdog Timer	9
5.6	Unanswered GN&CS FDIR Questions	10
6	PROPULSION SUBSYSTEM	10
6.1	Thrust Imbalance	10
6.2	Pressure Transducer Telemetry	10
7	THERMAL SUBSYSTEM	11
7.1	Heater Stuck Off	11
7.2	Heater Stuck On	11
7.3	CPHTS Leak	11
7.4	HGA Thermal TMON	11
8	ELECTRICAL POWER SUBSYSTEM	12
8.1	Battery Depth of Charge Monitor	12
8.2	Battery Open Cell Protection	12
8.3	V/T Sensor Fault	12
8.4	BPC Channel Faults	12

TABLE OF CONTENTS (Continued)

SECTION / PARAGRAPH	TITLE	PAGE
8.5	PDU Command Decoder Fault	12
8.6	PDU Mode Controller Fault	12
8.7	PDU EPC Over Voltage Fault	12
8.8	PDU Watchdog Timer	12
8.9	Battery Current Telemetry Amplifier Fault	13
8.10	PDU Capacitor Bank Fault	13
8.11	SSU EPC Over Voltage Fault	13
8.12	SSU Shunt Controller Fault	13
8.13	Solar Array Circuit Failed Open	13
8.14	Solar Array Circuit Failed Short	13
9	COMMUNICATIONS SUBSYSTEM	13
9.1	S–Band Communications	13
9.2	DAS Communications	14
9.3	KSA Communications	14
9.3.1	HGA Software Stops	14
9.3.2	GN&CS HGA Management Support	14
9.3.3	HGA Thermal TMON	14
9.4	Unanswered COMMS FDIR Questions	14
	APPENDIX A, FDIR PRESENTATION MATERIALS	15

(This page intentionally left blank.)

1 INTRODUCTION

1.1 Purpose

This design note documents the current Fault Detection Isolation and Recovery (FDIR) baseline for Spacecraft PDR. Each subsystem's FDIR features are discussed as well as the future work required to settle the few remaining implementation issues.

1.2 FDIR Definition

The FDIR system protects the spacecraft bus and instruments in the event of survival– and time–critical faults that occur in the absence of ground command. To accomplish this, the FDIR system autonomously switches the spacecraft's configuration to isolate the faults and to prevent propagation. It is then up to the ground to determine the root cause of the problem, initiate appropriate reconfiguration and then bring the spacecraft back to science operations.

FDIR does not include autonomous responses merely to exit undesirable, but safe, conditions.

During the determination of which failure modes would require autonomous action, a six hour autonomy requirement was assumed. This does not mean that the appropriate FDIR action will not take place for six hours, but rather that the spacecraft would be in jeopardy if no autonomous action were taken and the ground took as long as 6 hours to respond.

1.3 Design Evolution

The EOS–AM FDIR system concept has undergone several iterations. Heritage searches and "top–down" analyses by Systems Engineering using functional decomposition resulted in the baseline design presented in the initial release of this document. Subsequently, each subsystem lead has performed a "bottom–up" analysis considering the "worst–case" failure of each component to determine which failures require an FDIR response and what that response should be. These subsystem analyses were presented individually to GSFC subsystem leads and together in an FDIR system presentation. Many issues have been uncovered and resolved as a result of this close coordination with our GSFC counterparts. The resolutions as well as future work required are documented herein.

1.4 Document Organization

The set of FDIR features (the baseline features) required to respond to all hypothesized anomalies are documented in this design note. This document is organized by subsystem.

The presentation materials from the June 29, 1993, EOS FDIR system presentation to GSFC is included herein as an appendix. Please note, as discussed above, there were several issues with the presentation materials which were surfaced and the presentation materials have not been updated. The presentation materials are included as a documentation of the completeness of the current FDIR design.

2 GENERAL DISCUSSION

2.1 FDIR Partitioning

The spacecraft FDIR system is divided functionally into software based algorithms, telemetry monitor based features, and hardware based features. Features will be hardware based when the protection they afford is required in the absence of the SCC.

2.2 Ground Command Interaction

All software and TMON based FDIR features and commands will be capable of being disabled via ground command, as per Requirements Document requirement.

Ground command will always be required to bring the spacecraft to a higher level of functionality (ie. back to science mode from safe mode).

2.3 Instrument Notification

Instruments must be notified of the following events: 1) Imminent transition to Sun oriented safe mode, 2) Imminent transition to survival mode, and 3) Imminent propulsive maneuver. Note that the implication here is that safe mode notification is not required for Earth oriented safe mode on wheel control with the SCC operating.

Instruments all receive the "IMOK" from the CTIU via the C&T 1553B bus and are responsible for taking appropriate actions when that "IMOK" goes away.

3 COMMAND AND DATA HANDLING SUBSYSTEM

3.1 1553 Bus Controller Error Detection

C&DH FDIR is required to respond to Command and Telemetry 1553B bus failures as well as Low Rate Science 1553B bus failures. The spacecraft will rely on the 1553B protocol to detect parity errors, timing errors, and status errors. The autonomous response will be continued retries on the redundant bus. Continued retries means that each subsequent initial transmission will take place on the original bus, and only a single retry will take place per transaction.

For those bus failures where the autonomous retries are ineffective on the Command and Telemetry 1553B bus, one of the messages that will not be transmitted is the "IMOK", eventually resulting in spacecraft entry into safe mode.

3.2 "IMOK"

Upon receiving the "SCCOK" message from the SCC, the CTIU generates an "IMOK" message for distribution to the instruments. In addition, the SCC FSWS generates periodic "IMOK" logic pulse commands to the ACE and the PDU. There will be hardware–based watchdog timers in both the ACE and the PDU that will detect the lack of the "IMOK" pulse. The lack of the pulse may be the result of a failure in either a BDU C&T or a I/O Bus Interface failure associated with the ACE or

the PDU. When these timers "time–out" these components will autonomously enter a pre–defined safe mode configuration.

3.3 Single–bit Error Correction, Double–bit Error Detection (SECDED)

Both the SCC and the CTIU processors shall employ SECDED on their memory. Single bit errors shall be corrected and flagged in telemetry. Double bit errors shall cause a machine error interrupt and halt processor operations. The halt in processor operations will cause the "IMOK" to be withheld thus putting the spacecraft into safe mode.

Repetitive single bit corrections in the same memory location will be noted in telemetry and will be a candidate for ground initiated row or column memory sparing.

3.4 Hot Spare Command Path

Both the active and the standby CTIU will always be configured to receive commands, thus allowing for switching control of commanding and telemetry gathering via ground command.

3.5 Synchronization Marker Detection

The uplinked data validation process uses two "locks" from COMMS (bit lock and RF lock) as well as the CCSDS synchronization marker. The CTIU will not lock onto a transponder's data stream until all three of these "locks" are satisfied. The CTIU always provides housekeeping telemetry which will indicate lock acquisition. This feature protects against what would be a single point failure mode of the transponder that would lock both CTIUs to a transponder permanently.

3.6 Backup CTIU Clock Source

Nominally the CTIU gets its time reference from the Master Oscillator (MO) to generate the C&T bus cycle interrupt and for the transponder telemetry stream. The CTIU checks for loss of the MO input frequency. The loss is detected by waiting for 8.5 msec for the 8 msec interrupt generated by the TM&F circuitry. If a timing error is detected, the CTIU switches to its internal 4 megahertz frequency source to maintain command and telemetry communications on board the spacecraft and telemetry generation to the ground. The Time Mark and Frequency bus shall continue to operate.

3.7 Autonomous Switch of BDU Sides

Only one case has been identified where an autonomous BDU switch is required. When a loss of Array Drive Electronics (ADE) telemetry is detected, the SCC commands a change of BDU sides via CTIU relay drive commands and subsequently attempts to communicate with the ADE. If this is not successful, the BDU will be switched back to its original side and the test will be disabled.

4 FLIGHT SOFTWARE SYSTEM

4.1 EDAC

This feature is essentially the same as the C&DH SECDED feature in which all single bit errors are corrected and all double bit errors are detected.

Repetitive single bit corrections in the same memory location will be noted in telemetry and will be a candidate for ground initiated row or column memory sparing.

There is also a requirement to "scrub" all memory locations, nominally every 24 hours. A "scrub" consists of reading every memory location and re–writing it to itself to eliminate single bit errors due to SEUs and prevent them from becoming double bit errors.

4.2 Task Completion Test

The SCC OS/Executive will check that every task has completed its last cycle before scheduling the task for its current or next cycle. A failure of this test indicates a possible logic or hardware problem exists. The software task ID and the time of detection shall be logged and indicated in telemetry, and processing shall be halted thus putting the spacecraft into Earth oriented safe mode.

4.3 Major/Minor Cycle Count Synchronization

The SCC OS/Executive will monitor the synch with data word message on the 1553B interface and compare the major and minor cycle count information in the data word to make sure that it matches the SCC's internally generated major and minor cycle count. A failure of this test would likely be caused by an SCC hardware anomaly. Both major and minor cycle counts will be logged and processing shall be halted thus putting the spacecraft into Earth oriented safe mode.

4.4 Command Path Check

The SCC shall periodically (once per second) issue a command to itself. This test will detect a loss of SCC synch with the CTIU, an SCC serial output failure, a CTIU bus controller failure, or an SCC 1553B remote terminal failure. The major and minor cycle count will be logged and processing shall be halted thus putting the spacecraft into Earth oriented safe mode.

4.5 Telemetry Monitor Service

A table driven telemetry monitor function shall exist in the SCC. The ground will control the functionality of the TMON by uplinking the TMON table. Simple boolean logic will be performed on either raw telemetry or processed data. Commands, or command sequences can be issued based on the results of the boolean calculations.

Tests will be grouped such that individual tests or logical groups of tests can be bypassed. Alternately, the tests can be run, with individual commands or groups of commands inhibited.

5 GUIDANCE NAVIGATION AND CONTROL SUBSYSTEM

The Guidance Navigation and Control Subsystem (GN&CS) FDIR description is divided into sections by mode. Because of the different set of sensors and effectors used for each mode the FDIR system is necessarily different enough to warrant separate discussions.

Much of the GN&CS FDIR system comes from Landsat / UARS heritage. EOS specific simulations are required prior to GN&CS subsystem CDR to determine the applicability of the tests and subsequent actions recommended.

A significant difference between the current EOS FDIR implementation and previous implementations is that when the EOS GN&CS FDIR algorithm declares an attitude error and puts the ACE into safe mode, neither the PDU nor the instruments are required to be notified. In other words, only the ACE will be in safe mode.

5.1 Acquisition Mode

The acquisition mode begins with the start of rate nulling after separation from the launch vehicle. The acquisition mode ends when the update filter is fully operational (converged) in the stabilized transfer orbit.

5.1.1 Rate Nulling

First TBD Seconds – The primary attitude sensor during the first few seconds of acquisition mode is the IRU. During these first TBD seconds, a comparison test is performed on the output of each gyro axis. If the difference between the two redundant outputs for each axis exceeds a threshold, the gyro reporting the lower rate is accepted. Note, the TBD will be resolved prior to GN&CS CDR.

After First TBD Seconds – Earth Sensor data is used as the primary attitude sensor for the pitch and roll axes after the first TBD seconds of rate nulling have elapsed. The IRU remains the primary attitude sensor for the yaw axis.

For the pitch and roll axes, ESA1 and ESA2 pointing errors are compared against reasonableness thresholds and against each other. In all safe mode entry cases, a check on Gyro A motor current is performed prior to committing to IRU1 for yaw rate, since Gyro A is used in both IRU1 and IRU2 channel selections. Failure of the motor current test results in safe mode entry using IRU1 for roll and pitch, and IRU2 for yaw. Decisions are made according to the following logic:

State	Test			Description	Safe Mode Configuration
	ESA 2	ESA 1	ESA2 minus ESA1		
0	In	In	In	Nominal operations	None Required
1	In	In	Out	Not credible	N/A
2	In	Out	In	Not credible	N/A
4	Out	In	In	Not credible	N/A
3	In	Out	Out	ESA1 is diagnosed as errant.	None, raise a flag in software. If either ESA eventually loses Earth presence signal (indicating that the failure was actually a faulty low output of ESA2) switch to sun oriented safe mode
5	Out	In	Out	ESA2 is diagnosed as errant.	Earth pointing on thrusters, ACE A, ESA1, IRU1.
6	Out	Out	In	Attitude error caused by component other than ESA	Earth pointing, ACE A, ESA1, IRU1.
7	Out	Out	Out	Not credible	N/A

For the yaw axis, IRU1 and IRU2 rates are compared against reasonableness thresholds and against each other. When a failure is detected, the IRU reporting the lower rate is accepted, and no mode change is commanded.

5.1.2 Local Vertical Acquisition, Yaw Gyro Compassing, Stellar Acquisition

Earth Sensor data is used as the primary attitude sensor for the pitch and roll axes. The IRU remains the primary attitude sensor for the yaw axis.

For the pitch and roll axes, if one or both of the ESAs report pointing errors exceeding a threshold, Earth pointing safe mode on wheel control will be commanded.

For the yaw axis, IRU1 and IRU2 rates are compared against reasonableness thresholds and against each other. When a failure is detected, the IRU reporting the lower rate is accepted, and no mode change is commanded.

5.1.3 Update Filter

Should either of the Earth Sensors report pointing errors exceeding a threshold or the attitude determination algorithm reports attitude errors exceeding a threshold, Earth oriented safe mode entry on wheel control is initiated.

5.2 Orbit Adjust Mode

The orbit adjust mode is entered via ground command whenever a propulsive maneuver is required. This could be for in–plane drag make–up burns or for out–of–plane orbit inclination corrections.

Orbit adjustments take place with the update filter operational. If either of the Earth Sensors report pointing errors exceeding a threshold and the attitude determination algorithm reports attitude errors exceeding a threshold, or if yaw rate exceeds a threshold, FDIR will command an Earth oriented safe mode entry on thruster control using the alternate set of propulsion hardware (REAs, PMEA etc.). Although thrusters are enabled for control purposes, entering Earth oriented safe mode aborts the maneuver.

5.3 Science Mode

Science mode is entered via ground command when all subsystems and instruments have been fully checked out and full resources are declared available to instruments. The update filter is operational during science mode.

The GN&CS FDIR algorithm looks at the error signal outputs of the two Earth sensors and the attitude determination algorithm and takes actions depending upon whether thresholds are exceeded.

This logic will not directly detect component failures, instead the goal is to "safe" the spacecraft in the face of a sensor failure, effector failure, or a failure in the data/command transmission/processing chain.

Decisions are made according to the following logic:

State	Test			Description	Safe Mode Configuration
	ESA 2	ESA 1	Att. Det.		
0	In	In	In	Nominal operations	None Required
1	In	In	Out	The attitude determination error is identified as conditionally bad. Conditionally, because both ESA's signals are sent via the same BDU which could be bad. Switch BDU sides and re–perform test to verify that BDU is not cause of condition. If state remains the same after switching BDU sides, switch back to primary BDU side and enter safe mode.	Earth pointing, ACE A, ESA1, IRU1.
2	In	Out	In	Flag Earth Sensor 1 failure, continue science mode using good Earth sensor.	N/A
4	Out	In	In	Flag Earth Sensor 2 failure, continue science mode using good Earth sensor.	N/A
3	In	Out	Out	Attitude error is assumed. ESA2 is diagnosed as errant.	Earth pointing, ACE A, ESA1, IRU1. Perform passive wheel test.
5	Out	In	Out	Attitude error is assumed. ESA1 is diagnosed as errant.	Earth pointing, ACE A, ESA2, IRU1. Perform passive wheel test.
6	Out	Out	In	The attitude determination error is identified as conditionally bad. Conditionally, because both ESA's signals are sent via the same BDU which could be bad. Switch BDU sides and re–perform test to verify that BDU is not cause of condition. If state remains the same after switching BDU sides, switch back to primary BDU side and enter safe mode.	Earth pointing, ACE A, ESA1, IRU1. Perform passive wheel test.
7	Out	Out	Out	Attitude error is assumed.	Earth pointing. ACE A, ESA1, IRU1. Perform passive wheel test.

Notes: – ACE is to be configured for wheel control for all of these safe mode entries.
– Passive wheel test monitors response of wheels to routine torque commands. Non–nominal response for any wheel causes re–configuration to control via the other three wheels and no additional commands to be sent to the failed wheel.

5.4 Safe Mode

GN&C FDIR algorithm is disabled during safe mode operations. There is however a Reaction Wheel Assembly (RWA) speed TMON enabled during safe mode. Should this telemetry monitor detect excessive wheel speeds, a switch to thruster control will be commanded.

5.5 Mode Independent GN&CS Features

5.5.1 Solar Array Rotation Feature

The difference between the commanded position of the solar array and the actual position will be compared against a threshold. If the threshold is exceeded, block switch sides of the COMS/C&DH EM BDU, the Solar Array Drive (SAD), and the Array Drive Electronics (ADE).

5.5.2 High Gain Antenna (HGA) Motion Feature

The difference between observed gimbal angle changes and commanded gimbal angle changes are compared to a threshold. If the threshold is exceeded, terminate HGA motion commands, and place flag in telemetry.

HGA management software must verify that transmitters are either off, or are not routed through the HGA before commanding HGA entry into the "Don't Radiate Zone"

HGA gimbal required to tolerate a hard stop. There is no requirement for the antenna reflector to be strong enough to drive into an obstacle and stall motor without damage to the reflector.

5.5.3 Navigation Algorithm Failures

A "bad" position or velocity estimate will be detected by comparing the difference between the new estimates and the EOS orbit elements with a threshold or by the necessity to significantly edit Doppler during a Doppler pass. If the threshold is exceeded or excessive Doppler editing is noted, the existing EOS orbit elements will be maintained.

A "bad" oscillator frequency estimate will be detected by 1) comparing the difference between the estimate and the backup value with a threshold or by 2) comparing the difference between the new position and velocity estimates and the EOS orbit elements with a threshold or by 3) the necessity to significantly edit Doppler during a Doppler pass. If any of these tests fail, the navigation algorithm will transition to the backup frequency value and the existing EOS orbit elements.

"Bad" data loads will be protected against by 1) comparing the difference between the new orbit elements and the old orbit elements to a threshold, and 2) comparing the difference between the new TDRS state vector and the old TDRS state vector with a threshold. If either of these thresholds are exceeded, the old orbit elements will be maintained.

5.5.4 ACE Watchdog Timer

There will be a hardware based watchdog timer in the ACE that will monitor the "IMOK" message. When the "IMOK" is not received for three consecutive seconds, the ACE will enter Earth oriented safe mode and assume spacecraft attitude control.

5.6 Unanswered GN&CS FDIR Questions

Previous discussions of GN&CS FDIR have uncovered several unresolved issues. These issues must be resolved by the GN&CS CDR so that potential FDIR design changes can be incorporated.

Redundant Component Tests – The baseline FDIR approach is not to have any explicit checks on the health of any of the "non–primary" components. The question has been asked, "wouldn't it be better to know about the health of your back–up components?" Although the preferred answer is yes, it has not been determined just how this new information can be dovetailed into the current FDIR logic.

IRU Tests – Would we do anything different if we thought that electrical failures of the IRU were more likely than mechanical failures of the IRU?

Catalyst Bed Heaters – Do we turn on all attitude control Rocket Engine Assembly's (REA) catalyst bed heaters every time we use thrusters, such that if safe mode is entered, the alternate set of REAs will not be subjected to cold start when called upon.

DAS Panel BDU – The Direct Access System (DAS) panel has a Bus Data Unit (BDU) that supports the Earth Sensor Assemblies (ESAs). A failure of this BDU would appear to the GN&C FDIR algorithm as though both ESAs lost the Earth. In this case, a command to swap sides of the BDU is issued, and the Earth returns. Is there any reason to enter safe mode at this point? Should FDIR be disabled at this point?

IRU Fails Low (Rate Nulling First TBD Seconds) – Simulate this failure to verify that this failure would not endanger the spacecraft. Currently, when the IRUs disagree during rate nulling, the system selects the IRU which announces the lower rate. In the case in which rates are actually low this is not a problem. However if the spacecraft actually has significant rates, the system will select the failed IRU. When the ESAs are looked at (TBD seconds later) a pointing error will be noted. The question is, will simulations of EOS show that this would be soon enough to avoid losing the Earth and going to Sun oriented safe mode?

Appendage Deployment – Subsequent to a failure during acquisition, at least in some cases the response is to go to safe mode. Is it possible to continue with appendage deployment as scheduled, assuming of course that the failure does not affect the deployment command path?

6 PROPULSION SUBSYSTEM

6.1 Thrust Imbalance

A thrust imbalance (unintended thruster operation or thruster commanded on but unable to perform) will be detected indirectly by the GN&CS FDIR algorithm. An attitude error is reported, the maneuver is aborted and safe mode is entered under thruster based attitude control using the backup PMEA and REAs.

6.2 Pressure Transducer Telemetry

A potential for an FDIR feature has been identified to reduce the risk of propellant leakage from failed engine welds and faulty valve seats. The feature would involve monitoring pressure telemetry

and activating half system latching valves in response to a pressure drop. The alternative would be to maintain these latch valves in a closed position. Further study is required in this area prior to propulsion subsystem CDR.

7 THERMAL SUBSYSTEM

Passive thermal control elements and equipment module heat pipes have no critical FDIR requirements. Failures of these components is tolerated due to active redundancy or sufficient margin in the design.

7.1 Heater Stuck Off

HCE–3 and HCE–5 – Failure is detected by monitoring component temperature telemetry as it falls below allowable alarm limits. First a validity check will be performed on the telemetry against its expected range. If the temperature telemetry is deemed valid, and too low, the HCE status is checked. If the primary HCE is enabled, then the primary is disabled and the backup is enabled. If the primary HCE is disabled, then the primary will be enabled. HCE–5 has under–temperature thermostats to protect against an HCE–5 failure in the absence of the SCC.

HCE–2 and HCE–4 – Both the primary and the backup HCEs will be enabled with staggered setpoints to ensure that the backup only comes on when the primary fails.

7.2 Heater Stuck On

HCE–3, HCE–4 and HCE–5 – Failure is detected by monitoring component temperature telemetry as it rises above allowable alarm limits. First a validity check will be performed on the telemetry against its expected range. If the temperature telemetry is deemed valid, and too high, the HCE status is checked. If the primary HCE is enabled, then the primary is disabled and the backup is enabled. If the primary HCE is disabled, then other potential failure paths need to be investigated by ground operators.

HCE–3 and HCE–5 – These controllers will have over temperature cutoff to protect the associated controlled components. It would be impossible to use this cutoff feature to protect against exceeding design allowables due to the affected component's tight operating temperature range.

HCE–2 – No critically affected heaters.

7.3 CPHTS Leak

There will be a pressure switch monitoring each CPHTS. There will also be temperature telemetry available both from the instrument and from the CPHTS itself. A leak of the primary CPHTS is determined to have occurred when both the CPHTS pressure switch indicates low pressure and the instrument temperature exceeds design allowables. If both of these conditions exist, the affected instrument will be commanded to a low power mode and its survival heaters will be enabled. The ground will then be responsible for initiating operation of the appropriate backup CPHTS.

7.4 HGA Thermal TMON

The SCC based TMON will be programmed to monitor for out–of–limit temperature of the azimuth and elevation gimbals of the HGA. When out–of–limit conditions are detected, drive commands to the HGA gimbals will cease.

8 ELECTRICAL POWER SUBSYSTEM

8.1 Battery Depth of Charge Monitor

The battery depth of discharge will be compared to a threshold. If this threshold is exceeded, the spacecraft will enter survival mode including an autonomous shedding of all non–essential load and the enabling of survival heaters.

8.2 Battery Open Cell Protection

An open battery cell will cause the Thermally Actuated Bypass Switch (TABS) to activate and thus shunt current around the open cell.

The battery is sized such that the loss of voltage associated with what ends up to be a shorted cell is tolerable.

8.3 V/T Sensor Fault

Hardware voting logic in the PDU mode controller will sense a V/T sensor out–of–limit condition in one out of the three V/T sensors per battery. The V/T sensor determined to be out–of–limits will not be used in determining the proper V/T curve to use.

8.4 BPC Channel Faults

Each BPC channel has fuses on the battery and the bus side to protect against short circuits.

Hardware circuitry detects over current, over temperature and over voltage conditions for each BPC channel. If an out–of–limit condition is detected, the affected channel is taken off line. A hardware interlock will be provided such that only one channel in each of the BPCs can be taken off line.

8.5 PDU Command Decoder Fault

Hardware circuitry detects that the decoder fails to respond to the commanded battery charge rate or V/T levels. Upon detection, the resultant charge rate will not be lower than the commanded rate nor will it be higher than 23 Amperes and the resultant V/T curve will follow the V/T curve for the maximum battery voltage of 90 volts (essentially no V/T limiting).

8.6 PDU Mode Controller Fault

There will be hardware voting logic in the PDU mode controller to "vote out" a "bad" control signal.

8.7 PDU EPC Over Voltage Fault

Hardware over voltage protection circuitry trips if the EPC output voltage exceeds a threshold. When this happens the failed EPC is taken off line and the backup EPC powers the PDU bias circuitry.

8.8 PDU Watchdog Timer

There will be a hardware based watchdog timer in the PDU that will monitor the "IMOK". When the "IMOK" is not received for 3.25 seconds and the "safe mode enable" is active, or the "safe mode

on" command is set, then the PDU will enter safe mode and enter a default "safe" charge rate and V/T curve (11.8A, V/T #4).

Once the PDU command decoder is taken out of safe mode by ground command, the computer status monitor enable pulse must be sent once again from the BDU to the PDU command decoder to re–enable the PDU command decoder safe mode circuitry, thus restarting the monitoring of the "IMOK" pulse train.

The PDU will not receive a go to safe mode command when the spacecraft enters safe mode due to an attitude anomaly.

8.9 Battery Current Telemetry Amplifier Fault

Software voting logic in the SCC selects which current telemetry to use.

8.10 PDU Capacitor Bank Fault

Each pair of capacitors will be fused separately. The main power bus is protected from shorted capacitors as fuses are cleared. Three pairs of capacitors are redundant.

8.11 SSU EPC Over Voltage Fault

Hardware over voltage protection circuitry trips if the EPC output voltage exceeds a threshold. When this happens, the failed EPC is taken off line and the backup EPC in hot stand–by powers the critical SSU circuitry.

8.12 SSU Shunt Controller Fault

Hardware voting logic in the SSU shunt controller is used to "vote out" a "bad" control signal.

8.13 Solar Array Circuit Failed Open

Open circuit causes the loss of that circuit. This will reduce the solar array output by 1/24th. There is sufficient array margin to complete the mission despite this reduction in array output due to additional circuits included in the array design.

8.14 Solar Array Circuit Failed Short

Shorted circuit causes the loss of that circuit. This will reduce the array output by 1/24th. The EPS bus is protected from the effects of this failure by a series blocking diode in the SSU and by a fuse in the PDU. There is sufficient array margin to complete the mission despite this reduction in array output due to additional circuits included in the array design.

9 COMMUNICATIONS SUBSYSTEM

9.1 S–Band Communications

There are no specific FDIR features in the S–Band system, however the following design features allow for significant failure tolerance: 1) The command interface from each transponder will be

cross strapped to the CTIUs. 2) Received commands will be available to both transponders from all antennas with no switching required. The HGA LHCP and RHCP, Nadir and Zenith omni feeds are combined with a hybrid and a coupler. 3) One transponder will be configured to receive high rate commands and the other to receive low rate commands in support of the omni link to protect against HGA mis–pointing. 4) Each transponder has an internal TCXO as a backup to the master oscillator to maintain nominal receiver frequency to within 25kHz. 5) S–Band transponders cannot be commanded off.

9.2 DAS Communications

There are no DAS FDIR features.

9.3 KSA Communications

9.3.1 HGA Software Stops

There will be HGA software motions stops to preclude hardware damage. These stops are independent of the GN&CS antenna commanding software.

9.3.2 GN&CS HGA Management Support

The HGA is required to provide telemetry to support the GN&CS HGA management software. Gimbal encoder data and RF drive status are required to support the RF stay–out zone feature.

9.3.3 HGA Thermal TMON

The HGA is required to provide gimbal temperature telemetry to support the HGA thermal TMON to protect the azimuth and elevation gimbals against damage due to overheating.

9.4 Unanswered COMMS FDIR Questions

Previous discussions of COMS FDIR have uncovered an unresolved issue. This must be resolved by the COMS CDR so that potential FDIR design changes can be incorporated.

RF Stay–out Zone – The RF stay–out zone for EOS includes a large zone for the Solar Array. What sort of damage to the Solar Array could be caused by irradiation with K–Band transmissions at the power level produced by the EOS HGA?

APPENDIX A

PRESENTATION MATERIALS

JUNE 29, 1993

FDIR PRESENTATION

EOS–AM Spacecraft Program

Failure Detection, Isolation and Recovery

June 29, 1993

Agenda

MARTIN MARIETTA

MARTIN MARIETTA ASTRO SPACE

Time	Subject	Presenter
9:00 – 9:15	Introduction	H. Silverman
9:15 – 9:45	Command and Data Handling FDIR	M. Roza
9:45 – 10:15	Software FDIR	K. Gosse
10:15 – 11:45	Guidance Navigation and Control FDIR	E. Austein
11:45 – 12:15	Thermal FDIR	D. Chalmers
12:15 – 1:00	Lunch	
1:00 – 1:30	Propulsion FDIR	L. Rattenni
1:30 – 2:00	Communications FDIR	T. Milbourne
2:00 – 3:00	Electrical Power FDIR	N. Nassar
3:00 – 3:30	Wrap–up	

R		1						25	FIFO_BLK1_ON	FI

EOS–AM Spacecraft Program

FDIR Introduction

June 29, 1993

Overview

- FDIR Purpose
  - Protects Bus and Instruments in Absence of Ground Control
  - Achieves Protection by Autonomously Switching Hardware and Software
- Challenges
  - Determining Which Failures Require Autonomous Action
  - Establishing Sensing and Switching Methodology for Those Failures
- Philosophy
  - Respond Autonomously to Prevent Permanent Damage
  - Do Not Respond Autonomously Merely to Exit Undesirable, But Safe, Modes
  - Keep Design Simple and Based on Heritage Where Possible
  - Add New Features Where Necessary Specifically for EOS–AM
  - Design Assumes Six–Hour Autonomy Requirement (Same as UARS)

EOS FDIR Design Evolution

- FDIR Study (January 27, 1992)
  - Used UARS/Landsat Design as Starting Point
  - Examined DMSP/TIROS FDIR Design for Applicable Features
  - Analyzed EOS–AM to Determine Whether it Required New FDIR Features
  - Recommended a Baseline and Showed System Level Options
- FDIR Baseline Design Note (May 13, 1992)
  - Issued After Multiple Meetings with GSFC to Discuss System Level Options
  - Documented System Level FDIR Baseline to Support System and Subsystem PDRs
- FDIR Update (April 9, 1993)
  - Analyzes Faults at Box–Level for Each Subsystem's PDR Design
  - Identifies Time– and Mission–Critical Faults by Assessing Effect without FDIR Failure Mitigation Feature
  - Discusses FDIR System Response for Each Critical Fault
  - Goal is to Achieve Subsystem–Level Agreements So That FDIR Design Can Proceed to CDR–Level Detail

EOS FDIR Design Evolution (Continued)

MARTIN MARIETTA

MARTIN MARIETTA ASTRO SPACE

- Subsystem Meetings – Each Astro Space Subsystem Engineer Responsible for FDIR has Discussed Subsystem FDIR Design in Detail with Counterpart
  - Detailed Review of Each Subsystem's FDIR Design by GSFC Personnel
  - Agreements Have Been Reached on Most Issues Discussed

- Todays Presentation / Discussion
  - Attain Enough Information on Unresolved Issues to Reach Agreement by Spacecraft PDR

- Spacecraft PDR
  - Agreements on All FDIR Design Features to be Included
- Spacecraft CDR
  - Detailed Design of All FDIR Design Features

FDIR System Architecture

- Telemetry Monitor
  - Performs Simple, Table–Driven FDIR Functions
  - Accesses Table–Definable Telemetry Points
  - Checks Telemetry Points Against Thresholds / Takes Table–Definable Actions
  - Ground Modifications Do Not Require Re–acceptance of Flight Software
- Software Algorithms
  - Perform More Complex FDIR Functions
- Hardware
  - Performs FDIR Functions Requiring Fast Response
  - Performs FDIR Functions That Must be Independent of Software

Same Architecture and UARS and Landsat

Analysis Approach

- Component–Level Criticality Assessment
  - Table Showing Fault, Effect Without FDIR, and Time Criticality of Effect
  - "High" Criticality Fault Could Jeopardize Mission Within 1 Second, Remedy is usually a Hardware Implementation
  - "Medium" Criticality Fault Could Jeopardize the Mission Within 6 Hours, Remedy could be Hardware or Software
  - "Low" Criticality Means Fault Will Not Jeopardize Mission if Not Remedied Within 6 Hours, Requires No Autonomous Response

- Description of FDIR Response for Each "High" and "Medium" Criticality Fault
  - Method of Detection
  - Autonomous Response
  - Heritage

EOS–AM Spacecraft Program

Command & Data Handling Subsystem FDIR

June 29, 1993

C&DHS Functional Block Diagram

MARTIN MARIETTA

MARTIN MARIETTA ASTRO SPACE

LEGEND

BC	=	MIL-STD-1553B Bus Controller
BDU	=	Bus Data Unit
C&T	=	Command & Telemetry
CTIU	=	Command and Telemetry Interface Unit
DAS	=	Direct Access System (Comm)
DCU	=	Data Control Unit
DMU	=	Data Memory Unit
GN&C	=	Guidance Navigation and Control
GSE	=	Ground Support Equipment
HGA	=	High Gain Antenna
H/K	=	Housekeeping
INSTR	=	Instrument
LV	=	Launch Vehicle
MO	=	Master Oscillator
MOD	=	Modulator
KSA	=	Ku-band Single Process
REM	=	Recorder Equipment Module
RT	=	MIL-STD-1553B Remote Terminal
RWA	=	Reaction Wheel Assembly
SCC	=	Spacecraft Controls Computer
SFE	=	Science Formatting Equipment
SSR	=	Solid State Recorder
SSST	=	Solid State Star Tracker
TLM	=	Telemetry
XPND	=	S-band Transponder

NOTE: All busses are redundant
Italics : Non-C&DHS Equipment
BOLD : Equipment Module

MIL-STD-1553B BUS

Indicates number of components

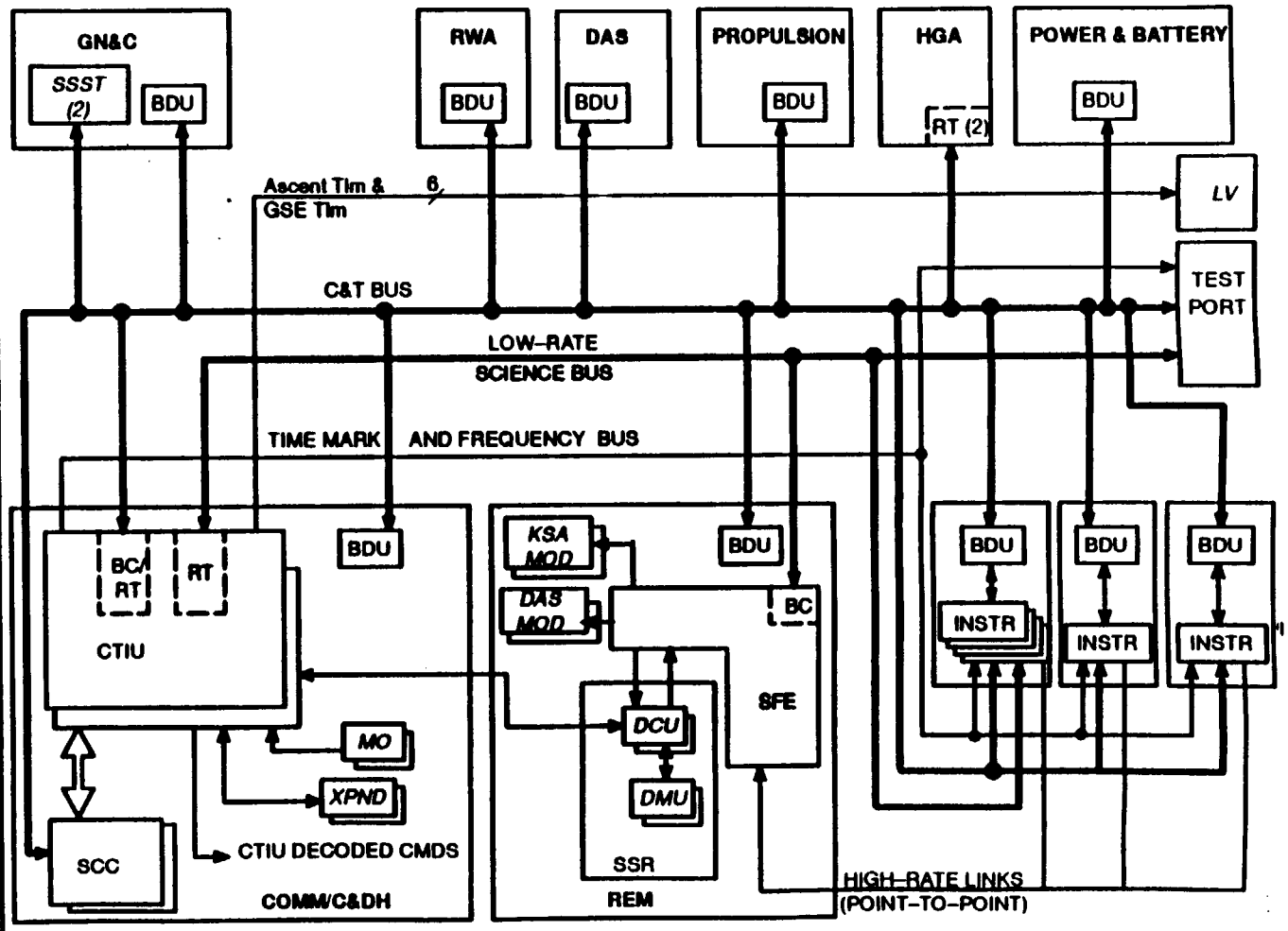

C&DHS Functional Faults

MARTIN MARIETTA

MARTIN MARIETTA ASTRO SPACE

Item	Function	Failure	Criticality	Effect	Comments
1553B Bus	Electrical transmission	Short	Med	Loss of spacecraft commanding and tlm	Requires FDIR response
TM&F Bus	Electrical Transmission	Short	Low	Loss of precise time service	Switch driver to backup bus
CTIU	Command and Telemetry Bus Control	Loss of output	Med	Loss of spacecraft commanding and tlm	Requires FDIR response
	LRS	Loss of output	Low	Loss of housekeeping in science data stream	Ground commanded switch of standby CTIU to active
	TM&F Bus	Loss of output	Low	Loss of precise time service	Ground command switch CTIUs
	Transponder Input	Receiver failure	Low	Loss of ground commanding to CTIUs	Disable active CTIU from other CTIU
	Transponder Input	Stuck control line	Med	Both CTIUs locked to a single transpoder input	Requires FDIR response
	Transponder Output	Driver failure	Low	Loss of spacecraft telemetry data	Ground commanded disable of the active CTIU and switch of standby CTIU to active
	Clock Generator Input	MO Frequency	Med	Loss of ~~precise~~ time service, +c/T on the bus	Requires FDIR response

Not A.t.

C&DHS Functional Faults

MARTIN MARIETTA

MARTIN MARIETTA ASTRO SPACE

Item	Function	Failure	Criticality	Effect	Comments
SCC	Serial Input	Receiver	Med	SCC Control lost	Requires FDIR response
	Serial Output	Driver	Med	SCC Control lost	Requires FDIR response
	C&T interface	I/O	Low	SCC cmd/tlm lost	Ground commanded switch of controling SCC
	Processor Memory	Bits	Med	SCC Control Lost	Requires FDIR response
BDU	C&T interface	I/O	Med	Possible loss of spacecraft control/telemetry	Requires FDIR response
	BDU I/O	I/O	Med	Possible loss of spacecraft control/telemetry	Requires FDIR response
SFE	Anything	I/O	Low	Loss of some or all science data	Ground commanded switch SFE internal redundancy
SSR	Anything	I/O	Low	Loss of some or all Science data	Ground commanded switch of DCUs or memory allocations in DMUs

Critical Faults Requiring FDIR Response

MARTIN MARIETTA

MARTIN MARIETTA ASTRO SPACE

- Single MIL–STD–1553B bus failure
- CTIU Command and Telemetry (C&T) Bus control failure
- CTIU Transponder's input has stuck control line(s) for bit and/or RF lock signals
- CTIU clock generator
- SCC bit errors in memory
- SCC serial input
- SCC serial output
- BDU C&T bus interface failure
- BDU Input and output function failure

Single MIL–STD–1553B Bus Failure

- Feature: Hardware retry by the Bus Controller on the redundant bus
  - Autonomous function of protocol device
- Detection: Bus controller detects errors of bus operation
  - Parity errors, timing, protocol, status bits
- Response: Continued retries on redundant bus
  - Initially set for retry on opposite bus which maintains spacecraft operations using SCC and full housekeeping telemetry
  - Ground can configure bus controller for retry on same bus for noise errors
- Heritage: New, but standard for 1553 bus

Critical Fault Responses
SCC Serial I/O Failure

MARTIN MARIETTA

MARTIN MARIETTA ASTRO SPACE

- FDIR Feature: SCC S/W generates "SCC–OK"; CTIU firmware monitors SCC–OK and generates "IMOK" status based on valid receipt
- Detection: CTIU detects loss of "SCC–OK" from SCC
  - Time–out function after 2.048 seconds - Stops distribution. Count to 13, but how long?
- Response: CTIU firmware witholds "IMOK" from distribution on C&T bus
  - CTIU autonomously withholds "IMOK"
  - Users of the IMOK message autonomously reconfigure, e.g., ACE assumes attitude control
- Heritage: UARS

Critical Fault Responses
Memory Hard failure

- FDIR Feature: SECDED – single error correction, double error detection on memory
- Detection: Single bit or double bit errors
  - Function provided in hardware
- Response: Single bits corrected, double bit errors cause machine error interrupt and a halt
  - Users of the IMOK message autonomously reconfigure, e.g., ACE assumes attitude control
- Heritage: UARS

Critical Fault Responses
CTIU C&T Bus Control Failure

MARTIN MARIETTA

MARTIN MARIETTA ASTRO SPACE

- FDIR Feature: CTIU generates "IMOK" status
- Detection: Lack of IMOK status
- Response: Users reconfigure for Safe–Mode autonomously based on hardware or firmware implemented watchdog timers
- Heritage: UARS
- CTIU failure will result in Safe Mode entry
  - Temporary loss of spacecraft commanding and telemetry gathering through the C&DHS
  - CTIU still generates telemetry stream
  - Each CTIU is always capable of receiving commands allowing for switching control of commanding and telemetry gathering by ground command

Critical Fault Responses
CTIU Transponder Control Line

- FDIR Feature: CTIU firmware checks for CCSDS synchronization marker both interfaces after bit and RF lock detected
- Detection: Synchronization marker detection, bit and RF lock
  - Precludes invalid lock due to stuck logic level or data lines out of the transponder
- Response: Check both transponders' input for bit and RF lock and wait for synchronization marker to lock on an interface
  - System will only check alternate interface in the event of loss of either bit or RF lock
- Heritage: New

Critical Fault Responses
CTIU Clock Generator Input

MARTIN MARIETTA

MARTIN MARIETTA ASTRO SPACE

- FDIR Feature: Second clock source
- Detection: MO frequency too high or low (± .5 milliseconds) over cm 8 m 1 period.
  - Checking for significant errors
- Response: Switch to internal frequency source (ak. 4 MHz) to maintain command and telemetry communications between the ground and the spacecraft
  - MO frequency used for generation for C&T bus cycle interrupt and ~~of~~ for transponder telemetry stream
  - TM&F bus continues to operate
- Heritage: New

Critical Fault Responses
BDU C&T or I/O Bus Interface

MARTIN MARIETTA

MARTIN MARIETTA ASTRO SPACE

- FDIR Feature #1: "IMOK" status
- Detection: Loss of IMOK by the ACE or Power Distribution Unit
  - Only components which receive dicrete logic pulses for IMOK
- Response: Hardware implemented watchdog timers in the ACE and PDU detect loss of IMOK
- Heritage: UARS

- FDIR Feature #2: Autonomous switch of BDU sides
  - Only one case identified where this is necessary
- Detection: Loss of telemetry from Array Drive Electronics
- Response: SCC causes commands to CTIU to change BDU sides
  - Subsequent attempts to communicate with the ADE
- Heritage: UARS

Flight Software FDIR

Kevin M. Gosse

June 29, 1993

Overview

- Flight Software hosts most of the EOS–AM FDIR System
  - Individual Subsystems allocate FDIR functions to be implemented in Flight Software
  - Simple functions to be implemented by a generic telemetry monitor (TMON) service
  - Complex functions to be implemented with dedicated software algorithms such as:
    - HGA FDIR Algorithm
    - GN&C FDIR Algorithm
    - Software FDIR Algorithm
- Software FDIR Algorithm performs:
  - Memory scrub to detect corrupted memory locations
  - Software task execution check to detect task overruns
  - Time synchronization check to detect time faults
  - Command path check to determine SCC capability to command spacecraft
  - IMOK receipt check

FSW: Faults, Effects, Criticality, & Response

MARTIN MARIETTA
MARTIN MARIETTA ASTRO SPACE

Failure	*Detection Method*	*Effect*	*Criticality*	*Response*
Memory Single Bit Error	Memory Scrub	No effect on software	~~Medium~~ Low	Increment counter, log event, continue execution, re-write
Memory Double Bit Error	Memory Scrub	Software may execute erroneously	Medium	Increment counter, log event, And Idle software execution
Task Overrun/Overrun	Task Completion Check	Task functionality not completed on time.	Medium	Withhold SCCOK message and idle software execution
Software not in Sync with Spacecraft Time	Sync with data word comparison and time comparison check	SCC Flight Software Time not in Sync with the CTIU.	Medium	Withhold SCCOK message and idle software execution
No receipt of SCC command data transfer	SCC command path check	SCC can not command spacecraft	Medium	Withhold SCCOK message and continue execution
No receipt of IMOK message	Software check	SCC can not command/receive data	Medium	Withhold SCCOK message and continue execution

Memory Fault

Single Bit Error

- Memory fault caused by
  - SEU event causing a memory bit error
  - Memory hardware failure
- Method of detection
  - Memory scrub (every 24 hours)
  - CPU interrupt occurs upon memory EDAC logic detecting a single bit error
- Autonomous response
  - Memory EDAC logic corrects bit in error
  - Log the event
    - Memory location
    - Time of detection
    - Increment Single Bit Detect Counter
  - Indicate Single Bit Error Detected in telemetry
  - Continue normal software execution
- Heri ge: UARS

Memory Fault

Double Bit Error

- Memory fault caused by
  - SEU event causing a memory bit error(s)
  - Memory hardware failure
- Method of detection
  - Memory scrub (every 24 hours)
  - CPU interrupt occurs upon memory EDAC logic detecting a double bit error
- Autonomous response
  - Log the event
    - Memory location, Time of detection
    - Increment Double Bit Detect Counter
  - Indicate Double Bit Error Detected in telemetry
  - Continue software execution if effected memory location is not used
  - Withhold SCCOK indicators (to CTIU, ACE, PDU and C&DH/COMM BDU) if memory location is used by software
  - Gracefully degrade software to an Idle State
- Heritage: UARS

Task Overrun Anomaly

MARTIN MARIETTA

MARTIN MARIETTA ASTRO SPACE

- Software Task Overrun caused by
  - SCC local hardware anomaly such as a degraded local oscillator
- Method of detection
  - Software tasks indicate execution state for current cycle (Executing/Completed)
  - SCC OS/Executive checks that every task has completed it's last cycle before scheduling the task for current/next cycle
- Autonomous Response
  - Log the event
    - Software task id
    - Time of detection
  - Indicate Software Task Overrun in telemetry
  - Withhold SCCOK indicators (to CTIU, ACE, PDU and C&DH/COMM BDU)
  - Gracefully degrade software to an Idle State
- Heritage: New GPS, 94

SCC Time Synchronization Anomaly

- SCC Time Synchronization anomaly caused by
  - SCC local hardware anomaly such as:
    - Degraded interval timer oscillator
    - Interval timer hardware anomaly
- Method of detection
  - Synch with data word major and minor cycle count does not match SCC's internally generated major and minor cycle count.
- Autonomous Response
  - Log the event
    - Major and Minor Cycle count
    - Time of detection
  - Indicate SCC Time Synchronization Anomaly in telemetry
  - Withhold SCCOK indicators (to CTIU, ACE, PDU and C&DH/COMM BDU)
  - Gracefully degrade software to an Idle State
- Heritage: New

SCC Command Path Failure

SCC Command Path Failure caused by

- SCC not in synch with CTIU
- C&DHS hardware failure such as:
  - SCC serial output failure
  - CTIU bus controller failure

- Method of detection
  - Periodically SCC checks for receipt of a command issued to itself 1 Hz.
- Autonomous Response
  - Log the event
    - Major and Minor Cycle count
    - Time of detection
  - Indicate SCC Command Path Failure in telemetry
  - Withhold SCCOK indicators (to CTIU, ACE, PDU and C&DH/COMM BDU)
  - Gracefully degrade software to an Idle State

Heritage: UARS

IMOK Receipt Check

- Failure to receive IMOK from CTIU caused by
  - Command and Telemetry Bus failure
  - C&DHS hardware failure such as:
    - SCC serial output, 1553B BCRTM device or 1553b receiver
    - CTIU bus controller failure or CTIU 1553b transmitter
- Method of detection
  - IMOK message to received every 1.024 seconds
- Autonomous Response (After 2.048 seconds)
  - Log the event
    - Major and Minor Cycle count
    - Time of detection
  - Withhold SCCOK indicators (to CTIU, ACE, PDU and C&DH/COMM BDU)
  - Gracefully degrade software to an Idle State
- Heritage: UARS

Telemetry Monitor Service

- Semi–Autonomous function to detect and correct potential spacecraft anomalies
- Provides some automated controls for orbital operations
- Table driven process which
  - Ground controls TMON functionality by uplinking a TMON Table
  - TMON Table contains functional information which Flight Software acts upon
  - Flight Software integrity kept intact (not a software modification)
  - Flight Software does not have to get re–acceptance tested
- Heritage: UARS

and . vrd in the ...

Telemetry Monitor Service

MARTIN MARIETTA

MARTIN MARIETTA ASTRO SPACE

Telemetry Monitor Group ID	Group Enable	Execution Frequency	Time Offset [X,Y]	Telemetry Address	Mask Value	Relational Comparison (<,>,=,<=, >=, and ≠)	Threshold	Boolean Operator (And / Or / Not)	Predefined Command	Command Inhibit Indicator	Report Indicator	Group End Indicator
1	.Enable.	1.024	[0,64]		00ff	>	7f	.And.				
					00ff	<	25		Command	.No.	.True.	.End.
2	.Disable.	0.512	[0,16]									
.....												

Telemetry Monitor Example

```
If Telemetry Monitor Group 1 is Enabled then
        Execute at time [X, Y] every 1.024
        if  (((Telemetry point 1 .and. Mask Value) greater than Threshold)
.And.
            ((Telemetry point 2 .and. Mask Value) less than Threshold)) then
              if (Command Inhibit is False) then
                Issue predefined command
              endif
              if (Report Indicator is True) then
                Indicate Telemetry Monitor Group Id executed in telemetry
              endif
        endif
endif
```

GN&CS FDIR Origin & Goals

- EOS GN&CS has heritage with UARS, EUVE, Landsat D
- Heritage UARS FDIR offers minimum cost and minimum risk starting point for EOS
- Heritage UARS FDIR can serve EOS with some modifications
- UARS & Landsat D GN&CS FDIR refined & extensively simulated at Astro
- First failure only - FDIR processing stops after responding to first failure
- Immediate danger only - respond only to failures that endanger spacecraft
  - Within the first orbit after launch
  - Within 6 hours after failure occurs in subsequent orbits
  - With the pre-defined single set of components

FDIR Procedures - following UARS

- Prefer to respond to detected failure by switch to Safe Mode with block swap of GN&C components
- Isolate failures only enough to avoid going to Safe Mode with bad components
- Seek effects of failure only in pre-defined primary set of components - detect only some failures in backup components & then only to avoid going to Safe Mode with bad components
- Define models of component failures. Behavior of models of failed components spans ranges of behavior of actual failed components
- Define as a "component" the Attitude Determination Algorithm - a composite of the Update Filter together with the sensors & services that support it - SSST, IRU, FSS, Navigation Algorithm

Figure 1. GN&C Electrical Interfaces

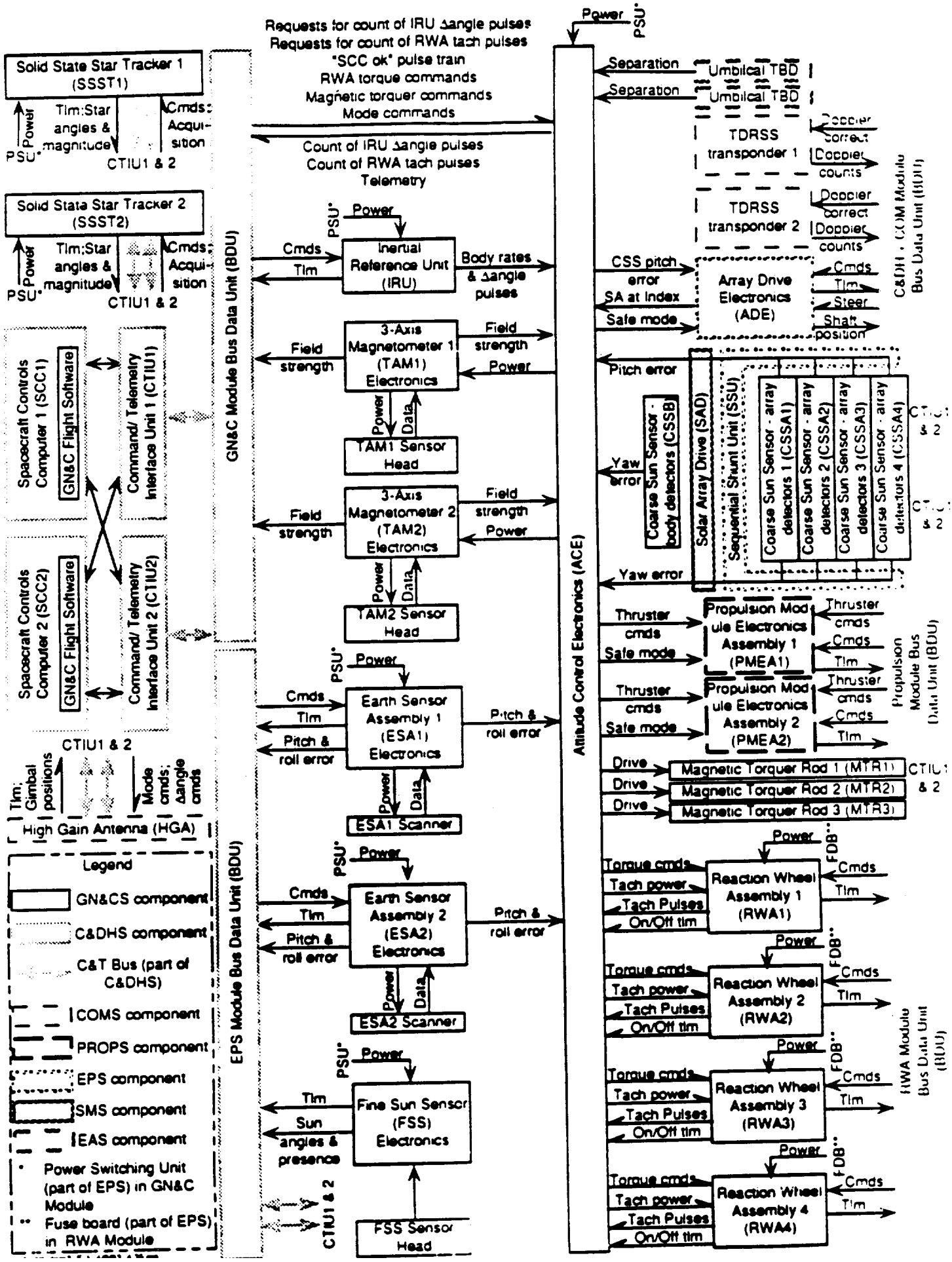

Components, Failures, Effects, & Criticality
(Sheet 1 of 3)

Component	Links to GN&C Flight Software (FSW)	Failure Model	Effects, in Absence of FDIR, Worst Case	Criticality
SCC & FSW	n/a	• FSW self-test • Power failure	Pointing error	Med
IRU	ACE - GN&C BDU - CTIU - SCC	• High & low rates • Gyro A motor failure		Med
ESA	EPS BDU - CTIU - SCC	• High & low angle error • False "off the earth" signal • False scanner rotation rate • Power failure		Med
Thrusters & PMEA	PROPS BDU - CTIU - SCC	• Individual thruster full on or full off • Unintended extra thrusters respond to each thruster command • Thrusters not enabled • Latch valve not opened • PMEA power failure		Med
PROPS BDU	CTIU - SCC	• Power failure • Signal processing failure		Med
RWA	ACE - GN&C BDU - CTIU - SCC	• Wheel drive high & low • Increased running friction • Wheel bearing seizure • Wheel tach high & low		Med
SSST	CTIU - SCC	Modeled implicitly as part of Attitude Determination Algorithm		Med
FSS	GN&C BDU - CTIU - SCC	Modeled implicitly as part of Attitude Determination Algorithm		Med

Components, Failures, Effects, & Criticality
(Sheet 2 of 3)

Component	Links to GN&C Flight Software (FSW)	Failure Model	Effects, in Absence of FDIR, Worst Case	Criticality
MTR	ACE - GN&C BDU - CTIU - SCC	High & low magnetic dipole	Saturate RWAs - hence pointing error	Med (?)
TAM	GN&C BDU - CTIU - SCC	High & low field strength measurement	Make MTRs ineffective - hence saturate RWAs - hence pointing error	Med (?)
SAD & ADE	C&DHS/ COMS BDU - CTIU - SCC	High & low angle error	Reduce energy collection from Sun	Med
HGA	CTIU - SCC	Drive logic misinterprets commands	Irradiate vulnerable spacecraft equipment	Med
		Other component blocks HGA motion	Damage other component or HGA reflector - HGA gimbal can tolerate hard stop	Med
Attitude Determination Algorithm	n/a	High & low estimate of attitude error	Pointing error	Med
Navigation Algorithm	n/a	• Bad position/velocity estimate • Bad oscillator frequency estimate	Pointing error	Med
Data Load	POCC - Uplink - Spacecraft Omni or HGA - Transponder - C&DHS & COMS BDU - CTIU - SCC	Incorrect table loads of ephemerides & state vectors	Pointing error	Med

Components, Failures, Effects, & Criticality
(Sheet 3 of 3)

Component	Links to GN&C Flight Software (FSW)	Failure Model	Effects, in Absence of FDIR, Worst Case	Criticality
ACE	GN&C BDU - CTIU - SCC	• Power failure • Signal processing failure	Pointing error	Med
EPS BDU	CTIU - SCC	• Power failure • Signal processing failure	Loss of ESA data - hence pointing error	Med
GN&C BDU	CTIU - SCC	• Power failure • Signal processing failure	Pointing error	Med
RWA BDU	CTIU - SCC	• Power failure • Signal processing failure	Loss of ON/OFF commands to RWAs	Low
C&DH + COMS BDU	CTIU - SCC	• Power failure • Signal processing failure	Loss of Doppler collection, hence pointing error	Med
120 Volt Supply	multiple	• Loss of one shunt circuit • Loss of one battery power conditioner channel • Loss of one battery cell • Loss of one power feed	Lost EPS redundancy - surviving elements support Spacecraft loads	Low
PSU	multiple	Loss of a power converter	Loss of redundancy - hot backup power converter diode-ored to loads	Low
CTIU	SCC	Loss of C&T Bus	Pointing Error	Med
S-Band Transponder	C&DHS & COMS BDU - CTIU - SCC	• High & low Doppler counts • Power failure	Corrupted Doppler data or no Doppler data, hence pointing error	Med
Master Oscillator	S-Band Transponder - C&DHS & COMS BDU - CTIU - SCC	• Power Failure • Frequency drift	Corrupted Doppler data - hence pointing error	Med

Launch & Earth Acquisition:				
Event - In Sequence	**Origin of Event**	**GN&C Mode after Event**	**Sensors Used after Event, Exclusive of Sensors Used Only for FDIR**	**Effectors used after Event**
ad ephemerides, star catalog	Real time[1]	Standby	none	none
art ascent on launch vehicle	n/a	Standby	none	none
Thrusters-PMEA2	art rate null	Separation	Acquisition - Rate Nulling	IRU2
	switch			
art navigation	Separation switch	Acquisition - Rate Nulling	IRU2	Thrusters-PMEA2
ate null complete, start local rtical acquisition	GN&C FSW[2]	Acquisition - Local Vertical Acquisition	ESA2, IRU2, TAM2	RWAs, MTRs[3]
tart solar array deploy	Stored[4]	Acquisition - Local Vertical Acquisition	ESA2, IRU2, TAM2	RWAs, MTRs, pyros, motors
ertical acquisition complete, art yaw acquisition	GN&C FSW	Acquisition - Yaw Gyrocompass	ESA2, IRU2, TAM2	RWAs, MTRs
aw acquisition complete	GN&C FSW	Acquisition - Yaw Gyrocompass	ESA2, IRU2, TAM2	RWAs, MTRs
tart solar array slew	Stored	Acquisition - Yaw Gyrocompass	SAD Pot B[5], ESA2, IRU2, TAM2	SAD B[6], RWAs, MTRs
tart solar array sun tracking	Stored	Acquisition - Yaw Gyrocompass	ESA2, IRU2, TAM2	RWAs, MTRs
tart HGA deploy	Stored?	Acquisition - Yaw Gyrocompass	ESA2, IRU2, TAM2	RWAs, MTRs, motor
SST1 & 2 ON	Stored?	Acquisition - Yaw Gyrocompass	ESA2, IRU2, TAM2	RWAs, MTRs
oad new ephemeris	Real time	Acquisition - Yaw Gyrocompass	ESA2, IRU2, TAM2	RWAs, MTRs
tart HGA acquisition of TDRS	Stored	Acquisition - Yaw Gyrocompass	HGA B shaft encoders, ESA2, IRU2, TAM2	HGA B drives, RWAs, MTRs
itialize Update Filter	Real time	Acquisition - Stellar Acquisition	HGA B shaft encoders, ESA2, IRU2, TAM2, FSS	HGA B drives, RWAs, MTRs
nd HGA track of TDRS	Stored	Acquisition - Stellar Acquisition	ESA2, IRU2, TAM2, FSS	RWAs, MTRs
itialize SSST2; begin star track	GN&C FSW	Acquisition - Stellar Acquisition	ESA2, IRU2, TAM2, FSS, SSST2	RWAs, MTRs
tart HGA acquisition of TDRS	Stored	Acquisition - Stellar Acquisition	HGA B shaft encoders, ESA2, IRU2, TAM2, FSS, SSST2	HGA B drives, RWAs, MTRs
tart to use Update Filter for ttitude determination	Real time	Acquisition - Update Filter	HGA B shaft encoders, IRU2, SSST2, TAM2, FSS	HGA B drives, RWAs, MTRs
nd HGA track of TDRS	Stored	Acquisition - Update Filter	IRU2, SSST2, TAM2, FSS	RWAs, MTRs

1 Real time command
2 GN&C Flight Software
3 Both windings of each MTR
4 Stored command
5 Used in all subsequent activities
6 Used in all subsequent activities

GN&CS Events & Components - Launch & Earth Acquisition

- GN&CS in Acquisition Mode throughout; submodes, in sequence -
  - Rate Nulling
  - Local Vertical Acquisition
  - Yaw Gyro compassing
  - Stellar Acquisition
  - Update Filter
- Arbitrarily use #2 of redundant pairs of components, Side B of internally redundant components
- Disable Thrusters at the end of Rate Nulling
- Use FSS and SSST2 in Update Filter

Event - In Sequence	Origin of Event	GN&C Mode after Event	Sensors Used after Event, Exclusive of Sensors Used Only for FDIR	Effectors used after Event
Orbit Acquisition Maneuvers:				
HGA acquisition of TDRS	Stored	Acquisition - Update Filter	HGA B shaft encoders, IRU2, SSST2, TAM2, FSS	HGA B drives, RWAs, MTRs
l ΔV commands	Real time	Acquisition - Update Filter	HGA B shaft encoders, IRU2, SSST2, TAM2, FSS	HGA B drives, RWAs, MTRs
l orbit acquisition maneuver	GN&C FSW	Orbit Adjust - Update Filter	HGA B shaft encoders, IRU2, FSS	HGA B drives, Thrusters-PMEA2
orbit acquisition maneuver	GN&C FSW	Acquisition - Update Filter	HGA B shaft encoders, IRU2, SSST2, TAM2, FSS	HGA B drives, RWAs, MTRs
HGA track of TDRS	Stored	Acquisition - Update Filter	IRU2, SSST2, TAM2, FSS	RWAs, MTRs
Enter Normal Mode:				
l HGA acquisition of TDRS	Stored	Acquisition - Update Filter	HGA B shaft encoders, IRU2, SSST2, TAM2, FSS	HGA B drives, RWAs, MTRs
d new ephemeris	Real time	Acquisition - Update Filter	HGA B shaft encoders, IRU2, SSST2, TAM2, FSS	HGA B drives, RWAs, MTRs
rt to use Normal Mode ude controller	Real time	Normal - Update Filter	HGA B shaft encoders, IRU2, SSST2, TAM2, FSS	HGA B drives, RWAs, MTRs
alize SSST1; start star track	GN&C FSW	Normal - Update Filter	HGA B shaft encoders, IRU2, SSST1 & 2, TAM2	HGA B drives, RWAs, MTRs
l HGA track of TDRS	Stored	Normal - Update Filter	IRU2, SSST1 & 2, TAM2	RWAs, MTRs
Start Navigation Filter:				
rt HGA acquisition of TDRS	Stored	Normal - Update Filter	HGA shaft encoders, IRU2, SSST1 & 2, TAM2	HGA B drives, RWAs, MTRs
rt Doppler track	Stored	Normal - Update Filter	Transponder 2 Doppler tracker, HGA B shaft encoders, IRU2, SSST1 & 2, TAM2	HGA B drives, RWAs, MTRs
rt Navigation Filter	Real time	Normal - Update Filter	Transponder 2 Doppler tracker, HGA B shaft encoders, IRU2, SSST1 & 2, TAM2	HGA B drives, RWAs, MTRs
d Doppler track	Stored	Normal - Update Filter	HGA B shaft encoders, IRU2, SSST1 & 2, TAM2	HGA B drives, RWAs, MTRs
d HGA track of TDRS	Stored	Normal - Update Filter	IRU2, SSST1 & 2, TAM2	RWAs, MTRs
Orbit adjust maneuver:				
art HGA acquisition of TDRS	Stored	Normal - Update Filter	HGA B shaft encoders, IRU2, SSST1 & 2, TAM2	HGA B drives, RWAs, MTRs
ad ΔV commands	Real time	Normal - Update Filter	HGA B shaft encoders, IRU2, SSST1 & 2, TAM2	HGA B drives, RWAs, MTRs
art drag make-up or inclination aneuver	GN&C FSW	Orbit Adjust - Update Filter	HGA B shaft encoders, IRU2	Thrusters-PMEA2, HGA B drives
nd drag make-up or inclination aneuver	GN&C FSW	Normal - Update Filter	HGA B shaft encoders, IRU2, SSST1 & 2, TAM2	HGA B drives, RWAs, MTRs
nd HGA track of TDRS	Stored	Normal - Update Filter	IRU2, SSST1 & 2, TAM2	RWAs, MTRs

GN&CS Events & Components - Circularize Orbit & Enter Normal Mode

- GN&CS mode transitions, all in Update Filter Submode:
  - Acquisition
  - Orbit Adjust
  - Acquisition
  - Normal
- Use Thrusters only in Orbit Adjust Mode
- In Normal Mode, Update Filter uses both SSSTs and stops using FSS
- In Normal Mode, acquire Doppler history & start Navigation Filter

Plan for FDIR Detection & FDIR Responses - by Component

Items labeled "UARS heritage" reflect expected performance of heritage software

Items labeled "new" are planned design requirements for new software

mpo-nent inks[1])	Failure	GN&CS Mode	Failure Detection	Action
V & SCC	• Software self-test • Power	• Standby	• Interrupt "SCC ok" pulse train to ACE	• Flag in housekeeping telemetry • Will require real time commands during Safe Mode below to deploy solar array
V & SCC	• Software self-test • Power	• Acquisition - Rate Nulling	• Interrupt "SCC ok" pulse train to ACE	• Safe Mode, with preset selections: - ACE B - ACE to Earth-Pointing - ESA2, IRU2 - thruster control via PMEA2 - ADE to Earth-Pointing • Requires real time commands to deploy solar array
V & SCC	• Software self-test • Power	• Acquisition - Yaw Gyro compassing • Normal	• Interrupt "SCC ok" pulse train to ACE	• Safe Mode, with preset selections: - ACE B - ACE to Earth-Pointing - ESA2, IRU2, TAM2 - RWAs, MTRs - ADE to Earth-Pointing • If failure occurs before solar array deployment, requires real time commands for solar array deployment
W & SCC	• Software self-test • Power	• Orbit Adjust	• Interrupt "SCC ok" pulse train to ACE	Safe Mode, with preset selections: • ACE B • ACE to Earth-Pointing • ESA2, IRU2 • thruster control via PMEA2 • PMEA2 aborts ΔV thrust • PMEA2 ignores all thruster fire commands from BDU • ADE to Earth-Pointing

Links connect com. nt with GN&CS FSW

ne 28, 1993 8:5

E.A. 776-

SCC & Flight Software Failures

Standby Mode

- Method of Detection: ACE detects interruption of "SCC OK" pulse train
- Autonomous Response: flag in FSW telemetry
- Heritage: Landsat 4 & 5, UARS

Acquisition - Rate Null Mode

- Method of Detection: ACE detects interruption of "SCC OK" pulse train
- Autonomous response: Earth Pointing Safe Mode - ESA, IRU, Thruster control
- Heritage: UARS

Acquisition - Vertical Acquisition Mode; Acquisition - Yaw Gyro compassing Mode; Acquisition - Stellar Acquisition Mode; Normal Mode

- Method of Detection: ACE detects interruption of "SCC OK" pulse train
- Autonomous response: Earth Pointing Safe Mode - ESA, IRU, TAM, RWAs, MTRs
- Heritage: UARS

Orbit Adjust Mode

- Method of Detection: ACE detects interruption of "SCC OK" pulse train
- Autonomous response: Earth Pointing Safe Mode - ESA, IRU, Thruster control
- Heritage: UARS

Remarks

- POCC must command solar array deployment if failure occurs before FSW can do it

ompo-nent .inks[1])	Failure	GN&CS Mode	Failure Detection	Action
)1	n/a	All	• Not detected • No threat to attitude control	• None • No threat to attitude control
)2 (ACE-&C U-CTIU-C)	• Incorrect large rate outputs	• Acquisition - Rate Nulling (first TBD seconds)	• Difference between IRU1 & 2 rates exceeds threshold in at least one axis • Where difference exceeds threshold, IRU1 rates lower	• For each axis that fails the tests, commit to the gyro with the smaller rate outputs • Raise a flag in FSW telemetry
)2 (ACE-I&C U-CTIU-C)	• Incorrect small rate outputs	• Acquisition - Rate Nulling (first TBD seconds)	• TBD - not clear from Landsat documentation	• TBD - not clear from Landsat documentation Simulation will have to show that something else catches the problem.
)2 (ACE-I&C)U-CTIU-:C)	• Small or large pitch or roll rate outputs	• Acquisition - Rate Nulling (after first TBD seconds)	• One or both ESAs report excessive pointing error • Gyro A motor current telemetry fails limit check Small pitch rate outputs simulated in UARS detected too late to stay on Earth. Want fix for EOS.	Safe Mode • GN&C BDU A • ACE A • ACE to Earth Pointing • ESA1, pitch & roll rates from IRU1 • If Gyro A motor telemetry out of limits, yaw rate from IRU2; otherwise from IRU1 • ADE to Earth Pointing • PMEA2 OFF, PMEA1 ON • Thruster control
U2 (ACE-N&C)U-CTIU-:C)	• Large yaw rate outputs	• Acquisition - Rate Nulling (after first TBD seconds)	• Yaw rate outputs from IRU2 exceed a threshold • Yaw rate outputs from IRU2 disagree with those from IRU1	• Commit to the gyro with the smaller yaw rate outputs • Raise a flag
U2 (ACE-N&C)U-CTIU-:C)	• Small yaw rate outputs	• Acquisition - Rate Nulling (after first TBD seconds)	• TBD - Not clear from UARS documentation	• TBD - Not clear from UARS documentation

[1] Links connect component with GN&CS FSW

IRU Failures
(Sheet 1 of 2)

Acquisition - Rate Nulling (first TBD seconds)

- Method of Detection
  - For each axis, difference of rates from IRU1 & 2 exceed threshold
  - For each axis that fails above, identify gyro with lower rate
- Autonomous Response: for each axis which fails test, commit to gyro with lower rate
- Heritage: Landsat 4 & 5

Acquisition - Rate Nulling (after first TBD seconds)

- Method of Detection
  - Pitch & Roll: Compare ESA1 & 2 pointing errors with thresholds & with each other
  - Yaw: Compare IRU 1 & 2 rates with thresholds & with each other
- Autonomous Response
  - To Pitch or Roll failure: Earth Pointing Safe Mode, ESA, IRU, Thrusters; failed-low Pitch rates simulated for UARS detected too late to stay on Earth: needs work on EOS
  - To Yaw failure: Commit to gyro with smaller rates.
- Heritage: UARS
- Heritage method of detection & autonomous response for yaw gyro failed low not clear from heritage reports - hence TBD

Component (Links[1])	Failure	GN&CS Mode	Failure Detection	Action
IRU2 (ACE-GN&C BDU-CTIU-SCC)	• Large or small pitch or roll rate outputs • Small yaw rate outputs	• Acquisition - Local Vertical Acquisition • Acquisition - Yaw Gyro compassing • Normal - Stellar Acquisition	• One or both ESAs report excessive pointing error • Gyro A motor current telemetry fails limit check • In Safe Mode, momentum monitor checks wheel momentum	Safe Mode • GN&C BDU A • ACE A • ACE to Earth Pointing • ESA1, pitch & roll rates from IRU1 • If Gyro A motor telemetry out of limits, yaw rate from IRU2; otherwise from IRU1 • ADE to Earth Pointing • Wheel control • TAM1 • MTRs • If momentum monitor reports excessive momentum, disable wheel control, magnetic unloading, and thruster unloading & switch to thruster control on PMEA1
IRU2 (ACE-GN&C BDU-CTIU-SCC)	• Large yaw rate outputs	• Acquisition - Local Vertical Acquisition • Acquisition - Yaw Gyro compassing • Normal - Stellar Acquisition	• Yaw rate outputs from IRU2 exceed a threshold • Yaw rate outputs from IRU2 disagree with those from IRU1	• Commit to the gyro with the smaller yaw rate outputs • Raise a flag
IRU2 (ACE-GN&C BDU-CTIU-SCC)	• Large or small rate outputs	• Acquisition - Update Filter • Normal - Update Filter	• Attitude determination algorithm reports pointing in pitch & roll ok, ESA1 & ESA2 report excessive pointing error • Attitude determination algorithm reports excessive yaw rate error • If fail majority vote in roll, test Gyro A motor current • In Safe Mode, momentum monitor checks wheel momentum • Detection of low yaw rate output depends upon roll pointing error becoming excessive (typically 4000 seconds after yaw output failure in UARS simulations). Prefer to find quicker detection.	Safe Mode • GN&C BDU A • ACE A • ACE to Earth Pointing • ESA1, pitch & roll rates from IRU1 • If failure in Gyro A motor, yaw rate from IRU2; otherwise from IRU1 • ADE to Earth Pointing • Wheel control • TAM1 • MTRs • If momentum monitor reports excessive momentum, disable wheel control, magnetic unloading, and thruster unloading & switch to thruster control on PMEA1
As above	As above	• Orbit Adjust - Update Filter	• Attitude determination algorithm reports pointing in pitch & roll ok, ESA1 & ESA2 report excessive pointing error • Attitude determination algorithm reports excessive yaw rate error • If fail majority vote in roll, test Gyro A motor current	Safe Mode • GN&C BDU A • ACE A • ACE to Earth Pointing • ESA1, pitch & roll rates from IRU1 • If failure in Gyro A motor, yaw rate from IRU2; otherwise from IRU1 • ADE to Earth Pointing • PMEA2 OFF, PMEA1 ON • Thruster control

1 Links connect component with GN&CS FSW

IRU Failures
(Sheet 2 of 2)

Acquisition - Local Vertical Acquisition Mode; Acquisition - Yaw Gyro compassing Mode; Acquisition - Stellar Acquisition Mode; Normal - Stellar Acquisition Mode

- **Method of Detection**
  - **One or both ESAs pointing error exceeds threshold**
  - **Yaw rates exceed threshold and IRU1 & 2 yaw rates disagree**
- **Autonomous response**
  - **Detect ESAs: Earth Pointing Safe Mode, ESA, IRU, TAMs, RWAs**
  - **Detect Yaw rates: Commit to gyro with smaller rates; raise flag**
- **Heritage: UARS**

Acquisition - Update Filter Mode; Normal - Update Filter Mode

- **Method of Detection**
  - **ESA1 & 2 pointing error exceed threshold**
  - **Attitude determination algorithm yaw rate error exceeds threshold**
- **Autonomous response: Earth Pointing Safe Mode, ESA, IRU, TAMs, RWAs, MTRs.**
- **Heritage: UARS**

Orbit Adjust - Update Filter Mode

- **Method of Detection - as above**
- **Autonomous response: Earth Pointing Safe Mode, ESA, IRU, thrusters**
- **Heritage: UARS**

Component (Links[1])	Failure	GN&CS Mode	Failure Detection	Action
ESA1 (EPS BDU-CTIU-SCC)	• Large angle error outputs • ESA power	• Acquisition - Local Vertical Acquisition • Acquisition - Yaw Gyro compassing • Normal - Stellar Acquisition	• ESA1 pointing error greater than credible • Difference between ESA1 & ESA2 pointing error greater than credible • ESA2 pointing error credible	• No mode change • Raise flag in software gyro output?
ESA1 (EPS BDU-CTIU-SCC)	Small angle error outputs	• Acquisition • Normal - Stellar Acquisition	• Not detected • No threat to attitude control	• None • No threat to attitude control
ESA2 (EPS BDU-CTIU-SCC)	• Large angle error outputs • ESA power	• Acquisition - Rate Nulling	• ESA2 pointing error greater than credible • Difference between ESA1 & ESA2 pointing error greater than credible • ESA1 pointing error credible	Safe Mode GN&C BDU A • ACE A • Ace to Earth Pointing • ESA1 • IRU1 • PMEA2 OFF, PMEA1 ON • Thruster control • ADE to Earth Pointing
ESA2 (EPS BDU-CTIU-SCC)	Small angle error outputs	• Acquisition - Rate Nulling	• ESA1 pointing error exceeds threshold • Difference between ESA1 & ESA2 pointing error greater than credible • ESA1 or ESA2 later reports loss of Earth	Safe Mode • GN&C BDU A • ACE A • ACE to Sun Pointing • CSS1 • IRU1 • PMEA2 OFF, PMEA1 ON • Thruster control • ADE to Inertial
ESA1 or ESA2 (EPS BDU-CTIU-SCC)	• Scanner speed telemetry • Angle mode bilevel telemetry	• Acquisition - Rate Nulling	• Scanner speed or angle mode bilevel telemetry signal on failed ESA out of limits • ESA1 & ESA2 report ok error angles	Safe Mode • GN&C BDU A • ACE A • ACE to Earth Pointing • Not-failed ESA • IRU1 • PMEA2 OFF, PMEA1 ON • Thruster control • ADE to Earth Pointing

1 Links connect component with GN&CS FSW

ESA Failures
(Sheet 1 of 3)

Acquisition - Rate Nulling Mode

- **Method of Detection**
  - **ESA1 or 2 pointing error exceeds threshold**
  - **ESA1 & 2 disagree**
  - **If failure produces false small pointing error measurements, then subsequent to above, ESA1 or 2 or both lose Earth**
- **Autonomous Response**
  - **If neither ESA loses Earth, Earth Pointing Safe Mode, ESA, IRU, Thruster control**
  - **If either ESA loses Earth, Sun Pointing Safe Mode, CSS, IRU, Thruster Control**
- **Heritage: UARS**

omponent (Links[1])	Failure	GN&CS Mode	Failure Detection	Action
SA2 (EPS DU-CTIU-CC)	• Large angle error outputs • ESA power	• Acquisition - Local Vertical Acquisition • Acquisition - Yaw Gyro compassing • Normal - Stellar Acquisition	• ESA2 pointing error greater than credible • Difference between ESA1 & ESA2 pointing error greater than credible • ESA1 pointing error credible • In Safe Mode, momentum monitor checks wheel momentum	Safe Mode • GN&C BDU A • ACE A • Ace to Earth Pointing • ESA1 • IRU1 • Wheel control • TAM1 • MTRs • ADE to Earth Pointing • If momentum monitor reports excessive momentum, disable wheel control, magnetic unloading, and thruster unloading & switch to thruster control on PMEA1.
SA2 (EPS DU-CTIU-CC)	Small angle error outputs	• Acquisition - Local Vertical Acquisition • Acquisition - Yaw Gyro compassing • Normal - Stellar Acquisition	• ESA1 pointing error exceeds threshold • Difference between ESA1 & ESA2 pointing error greater than credible • ESA1 or ESA2 later reports loss of Earth	Safe Mode • GN&C BDU A • ACE A • ACE to Sun Pointing • CSS1 • IRU1 • PMEA2 OFF, PMEA1 ON • Thruster control • ADE to Inertial
SA1 or SA2 (EPS DU-CTIU-CC)	• Scanner speed telemetry • Angle mode bilevel telemetry	• Acquisition - Local Vertical Acquisition • Acquisition - Yaw Gyro compassing • Normal - Stellar Acquisition	• Scanner speed or angle mode bilevel telemetry signal on failed ESA out of limits • ESA1 & ESA2 report ok error angles • In Safe Mode, momentum monitor checks wheel momentum	Safe Mode • GN&C BDU A • ACE A • ACE to Earth Pointing • Not-failed ESA • IRU1 • Wheel control • TAM1 • MTRs • ADE to Earth Pointing • If momentum monitor reports excessive momentum, disable wheel control, magnetic unloading, and thruster unloading & switch to thruster control on PMEA1.

1 Links connect component with GN&CS FSW

ESA Failures
(Sheet 2 of 3)

Acquisition - Local Vertical Acquisition Mode; Acquisition - Yaw Gyrocompass Mode; Acquisition - Stellar Acquisition Mode; Normal - Stellar Acquisition Mode

- Method of Detection
  - ESA1 or 2 pointing error exceeds threshold
  - ESA1 & 2 disagree
  - If failure produces false small pointing error measurements, then subsequent to above, ESA1 or 2 or both lose Earth
- Autonomous Response
  - If neither ESA loses Earth, Earth Pointing Safe Mode, ESA, IRU, TAM, RWAs, MTRs
  - If either ESA loses Earth, Sun Pointing Safe Mode, CSS, IRU, Thruster Control
- Heritage: UARS

Component (Links[1])	Failure	GN&CS Mode	Failure Detection	Action
ESA1 or ESA2 (EPS BDU-CTIU-SCC)	• Large angle error outputs • ESA power	• Acquisition - Update Filter • Normal, Update Filter	• Failed ESA reports excessive pointing error, other ESA & attitude determination algorithm report pointing ok • In Safe Mode, momentum monitor checks wheel momentum	Safe Mode • GN&C BDU A • ACE A • ACE to Earth Pointing • Not-failed ESA • IRU1 • ADE to Earth Pointing • TAM1 • MTRs • Wheel control • If momentum monitor reports excessive momentum, disable wheel control, magnetic unloading, and thruster unloading & switch to thruster control on PMEA1.
As above	As above	• Orbit Adjust - Update Filter	• Failed ESA reports excessive pointing error, other ESA & attitude determination algorithm report pointing ok	Safe Mode • GN&C BDU A • ACE A • ACE to Earth Pointing • Not-failed ESA • IRU1 • ADE to Earth Pointing • PMEA2 OFF, PMEA1 ON • Thruster control
ESA1 or ESA2	• Small angle error outputs	• Acquisition - Update Filter • Normal, Update Filter, • Orbit Adjust - Update Filter	• Not detected • No threat to attitude control	• None • No threat to attitude control

1 Links connect component with GN&CS FSW

ESA Failures
(Sheet 3 of 3)

Acquisition - Update Filter Mode; Normal - Update Filter Mode

- **Method of Detection**
  - **Failed ESA pointing error disagrees with other ESA and Attitude Determination Algorithm**
  - **Failure that produces false small pointing error measurements not detected - no threat**
- **Autonomous Response**
  - **If detected, Earth Pointing Safe Mode, ESA, IRU, TAM, RWAs, MTRs**
  - **If not detected, no response**
- **Heritage: UARS**

Orbit Adjust - Update Filter Mode

- **Method of Detection - as above**
- **Autonomous Response**
  - **If detected, Earth Pointing Safe Mode, ESA, IRU, thrusters**
  - **If not detected, no response**
- **Heritage: UARS**

Remarks

- **In Earth Pointing Safe Mode under RWA control, switch to Thruster control if RWA momenta exceed threshold**
- **Prefer to avoid mode change; verify alternate response - flag bad ESA & continue as before**

Compo-nent (Links[1])	Failure	GN&CS Mode	Failure Detection	Action
TAM1	n/a	All	• Not detected • No threat to attitude control	• Not detected • No threat to attitude control
TAM2	n/a	• Acquisition - Rate Nulling	• Not checked • Not used	• None
TAM2 (GN&C BDU-CTIU-SCC)	High or low field strength outputs	• Acquisition - Local Vertical Acquisition • Acquisition - Yaw Gyro compassing • Normal - Stellar Acquisition	• ESA1, & ESA2 both report excessive pointing errors • In Safe Mode, momentum monitor checks wheel momentum • Detection occurs typically 12,000 seconds after failure in UARS simulations; prefer to find quicker detection.	Safe Mode • GN&C BDU A • ACE A • ACE to Earth Pointing • ESA1 • IRU1 • ADE to Earth Pointing • TAM1 • MTRs • Wheel control • If momentum monitor reports excessive momentum, disable wheel control, magnetic unloading, and thruster unloading & switch to thruster control on PMEA1.
TAM2 (GN&C BDU-CTIU-SCC)	High or low field strength outputs	• Acquisition - Update Filter • Normal - Update Filter	• Attitude determination algorithm, ESA1, & ESA2 all report excessive pointing errors • In Safe Mode, momentum monitor checks wheel momentum • Detection occurs typically 12,000 seconds after failure in UARS simulations; prefer to find quicker detection.	Safe Mode • GN&C BDU A • ACE A • ACE to Earth Pointing • ESA1 • IRU1 • ADE to Earth Pointing • TAM1 • MTRs • Wheel control • If momentum monitor reports excessive momentum, disable wheel control, magnetic unloading, and thruster unloading & switch to thruster control on PMEA1.

why go to s.m.

1 Links connect component with GN&CS FSW

TAM Failures

Acquisition - Local Vertical Acquisition Mode; Acquisition - Yaw Gyro compassing Mode; Acquisition - Stellar Acquisition Mode; Normal - Stellar Acquisition Mode

- Method of Detection
  - ESA1 & 2 pointing error exceed threshold
- Autonomous Response
  - Earth Pointing Safe Mode, ESA, IRU, TAM, RWAs, MTRs
- Heritage: UARS

Acquisition - Update Filter Mode; Normal - Update Filter Mode

- Method of Detection
  - Attitude Determination algorithm, ESA1 & 2 pointing error exceeds threshold
- Autonomous Response
  - Earth Pointing Safe Mode, ESA, IRU, TAM, RWAs, MTRs
- Heritage: UARS

Remarks

- In Earth Pointing Safe Mode switch to Thruster control if RWA momenta exceed threshold
- In UARS simulations detection occurs typically in 12,000 seconds; prefer quicker detection for EOS

Compo-nent (Links[1])	Failure	GN&CS Mode	Failure Detection	Action
Ensemble component Attitude Determination", comprising • IRU (ACE-GN&CS BDU-CTIU-SCC), • SSST (CTIU-SCC), • FSS (EPS BDU-CTIU-SCC), • Update Filter software • Nav Filter software	High or low estimate of attitude error, regardless of actual spacecraft orientation	• Acquisition - Update Filter • Normal - Update Filter,	• High estimate: attitude determination algorithm reports excessive pointing error, ESA1 & ESA2 report ok • Low estimate: attitude determination algorithm & both ESAs report ok at first; spacecraft drifts until first ESA reports excessive error • In Safe Mode, momentum monitor checks wheel momentum	Safe Mode • GN&C BDU A • ACE A • ACE to Earth Pointing • ESA1 or 2: the ESA that *wasn't* the first to report excessive error • IRU1 • ADE to Earth Pointing • TAM1 • MTRs • Wheel control • If momentum monitor reports excessive momentum, disable wheel control, magnetic unloading, and thruster unloading & switch to thruster control on PMEA1.
As above	As above	• Orbit Adjust - Update Filter	• High estimate: attitude determination algorithm reports excessive pointing error, ESA1 & ESA2 report ok • Low estimate: attitude determination algorithm & both ESAs report ok at first; spacecraft drifts until first ESA reports excessive error	Safe Mode • GN&C BDU A • ACE A • ACE to Earth Pointing • ESA1 or 2: the ESA that *wasn't* the first to report excessive error • IRU1 • ADE to Earth Pointing • PMEA2 OFF, PMEA1 ON • Thruster control

1 Links connect component with GN&CS FSW

Attitude Determination Algorithm Failures

Ensemble "component" comprising
- IRU
- SSST & star catalog
- FSS
- Update Filter algorithm
- Nav Filter algorithm

Acquisition - Update Filter Mode; Normal - Update Filter Mode

- Method of Detection
  - False high error estimate: Attitude determination error estimate exceeds threshold, ESA1 & 2 errors ok
  - False low error estimate: At least one ESA error exceeds threshold
- Autonomous Response: Earth Pointing Safe Mode, ESA, IRU, TAM, RWAs, MTRs
- Heritage: UARS

Orbit Adjust - Update Filter Mode

- Method of Detection: as above
- Autonomous Response: Earth Pointing Safe Mode, ESA, IRU, thrusters
- Hertitage: UARS

Remarks: In Earth Pointing Safe Mode under RWA control, switch to Thruster control if RWA momenta exceed threshold

Component (Links[1])	Failure	GN&CS Mode	Failure Detection	Action
RWA (ACE-GN&CS BDU-CTIU-SCC)	• High or low drive • Running friction increase • Seized bearing • High or low tach output	• Acquisition - Local Vertical Acquisition • Acquisition - Yaw Gyro-compass • Acquisition - Stellar Acquisition • Acquisition - Update Filter • Normal - Update Filter	Heritage FDIR designed for heritage orthogonal/skew configuration which doesn't work for EOS pyramid configuration. Candidate detection scheme: • Passive wheel test - wheel acceleration in response to routine attitude control commands drops below a threshold; restrict test to torque commands above a threshold and to wheel speeds below a threshold	• Stop RWA - by zeroing command, preferably, or by commanding OFF, if necessary • Raise a flag in flight software • Don't enter Safe Mode • If in Update Filter Mode, switch to Acquisition - Yaw Gyro compassing Mode

1 Links connect component with GN&CS FSW

RWA Failures

Acquisition - Update Filter Mode; Normal - Update Filter Mode; Orbit Adjust - Update Filter Mode

- Detection Method
  - "Passive wheel test" - RWA acceleration responses to routine attitude control commands fail threshold
- Autonomous Response: Stop commands to RWA; if necessary, turn OFF RWA; raise flag in FSW telemetry
- Heritage: DMSP, TIROS; new version for UARS in development now

Remarks: Heritage UARS FDIR assumes orthogonal - skew wheel configuration, won't work with EOS wheels in pyramid configuration

mpo-nent inks[1])	Failure	GN&CS Mode	Failure Detection	Action
l	n/a	• Acquisition - Rate Nulling	• Not checked • Not used	• None
l &CS l-CTIU- ;)	High or low magnetic dipole	• Acquisition - Local Vertical Acquisition • Acquisition - Yaw Gyro compassing • Acquisition - Stellar Acquisition • Normal - Stellar Acquisition	• ESA1, & ESA2 both report excessive pointing errors • In Safe Mode, momentum monitor checks wheel momentum	Safe Mode • GN&C BDU A • ACE A • ACE to Earth Pointing • ESA1 • IRU1 • ADE to Earth Pointing • TAM1 • Wheel control • MTRs • If momentum monitor reports excessive momentum, disable wheel control, magnetic unloading, and thruster unloading & switch to thruster control on PMEA1.
R l&CS J-CTIU- ;)	High or low magnetic dipole	• Acquisition - Update Filter • Normal, Update Filter	• Attitude determination algorithm, ESA1, & ESA2 all report excessive pointing errors • In Safe Mode, momentum monitor checks wheel momentum • Detection occurs 6 hours or more after failure in UARS simulations; prefer to find quicker detection.	Safe Mode • GN&C BDU A • ACE A • ACE to Earth Pointing • ESA1 • IRU1 • ADE to Earth Pointing • TAM1 • Wheel control • MTRs • If momentum monitor reports excessive momentum, disable wheel control, magnetic unloading, and thruster unloading & switch to thruster control on PMEA1.

Links connect component with GN&CS FSW

MTR Failures

Acquisition - Local Vertical Acquisition Mode; Acquisition - Yaw Gyro compassing Mode; Acquisition - Stellar Acquisition Mode

- Detection Method
  - ESA1 & 2 pointing errors exceed threshold
- Autonomous Response
  - Earth Pointing Safe Mode, ESA, IRU, TAM, RWAs, MTRs; no change to MTR usage
- Heritage: UARS

Acquisition - Update Filter Mode; Normal - Update Filter Mode

- Detection Method
  - Attitude Determination Algorithm, ESA1 & 2 pointing errors exceed threshold
- Autonomous Response
  - Earth Pointing Safe Mode, ESA, IRU, TAM, RWAs, MTRs; no change to MTR usage
- Heritage: UARS

Remarks

- In Earth Pointing Safe Mode switch to Thruster control if RWA momenta exceed threshold.
- Simulations for UARS predict detection after the 6-hour time limit; for EOS prefer to find quicker detection & avoid autonomous entry to Thruster control

→ If ESAS disagree?

ompo-nent .inks[1])	Failure	GN&CS Mode	Failure Detection	Action
usters & EA OPS U-CTIU-C)	• A thruster full-on or full-off • Unintended extra thrusters respond to each thruster command • PMEA power failure • Thrusters not enabled • Latch valve not opened	• Acquisition - Rate Nulling	One of the following: • Rate error‡ exceeds a threshold and at least one ESA reports "valid Earth presence" • Rate error‡ exceeds a threshold and neither ESA reports "valid Earth presence" • Both ESAs report the same excessive pointing error ‡ UARS FDIR imposes rate error test only in pitch; EOS may require in all axes	Safe Mode • GN&C BDU A • ACE A • IRU1 • PROPS BDU A • PMEA2 OFF, PMEA1 ON • Thruster control • If first or third failures at left, - ACE to Earth Pointing - ESA1, except in first failure at left, if only ESA2 had "valid Earth presence", then ESA2 - ADE to Earth Pointing • If second failure at left, - ACE to Sun Pointing - CSS1 - ADE to Inertial
usters & EA	n/a	• Acquisition - Local Vertical Acquisition • Acquisition - Yaw Gyro compassing • Acquisition - Update Filter • Normal	Not used	None
usters & EA ROPS U-CTIU-C)	• A thruster full-on or full-off • Unintended extra thrusters respond to each thruster command • PMEA power failure • Thrusters not enabled • Latch valve not opened	• Orbit Adjust - Update Filter	One of the following: • Neither FDIR nor thruster control logic detects a failure • FDIR detects that the attitude determination algorithm and both ESAs report excessive pitch or roll errors • FDIR detects excessive yaw rate error • thruster control software detects that the attitude determination algorithm reports excessive pointing error	• If neither FDIR nor thruster control software detects a failure, burn continues to completion and no mode switching takes place • If FDIR detects a failure, Safe Mode: - GN&C BDU A - ACE A - ACE to Earth Pointing - IRU1 - ESA1 - PROPS BDU A - PMEA2 OFF, PMEA1 ON - Thruster attitude control - ADE to Earth Pointing • If thruster control software detects a failure, it aborts the maneuver and switches to previous mode

[1] Links connect component with GN&CS FSW

Thruster Failures

Acquisition - Rate Nulling Mode

- **Detection Method - one of the following:**
  - **ESA1 & 2 pointing errors agree & exceed threshold**
  - **At least one ESA loses Earth**
- **Autonomous Response**
  - **If both ESAs on Earth, Earth Pointing Safe Mode, IRU, ESA, Thruster control**
  - **If at least one ESA off Earth, Sun Pointing Safe Mode, IRU, CSS, Thruster control**

Orbit Adjust - Update Filter Mode

- **Detection Method - one of the following:**
  - **FDIR: Attitude Determination Algorithm & ESA1 & ESA2 Pitch or Roll errors exceed threshold or Yaw rate error exceeds threshold**
  - **Thruster control logic: Angle or rate error exceeds threshold**
  - **Not detected**
- **Autonomous Response - one of the following:**
  - **Detected by FDIR - Earth Pointing Safe Mode, IRU, ESA, Thruster control**
  - **Detected by Thruster control logic - abort maneuver & return to previous mode**
  - **Not detected - complete maneuver & return to previous mode**

Heritage: UARS

Compo-nent (Links[1])	Failure	GN&CS Mode	Failure Detection	Action
AD	n/a	• Acquisition - Rate Nulling • Acquisition - Local Vertical Acquisition • Acquisition - Yaw Gyro compassing (before start of SAD drive software)	not used	n/a
AD (ADE-PS BDU-TIU-SCC)	• High or low drive speed • Incorrect position indication	• Acquisition - Yaw Gyro compassing (after start of SAD drive software) • Acquisition - Stellar Acquisition • Acquisition - Update Filter • Normal • Orbit Adjust	Position error exceeds a threshold	• Swap SAD sides • Swap ADE sides • Swap BDU sides

[1] Links connect component with GN&CS FSW

SAD & ADE Failures

Acquisition - Yaw Gyro compassing Mode (after start of SAD drive software);Acquisition - Update Filter Mode; Normal Mode; Orbit Adjust Mode

- Detection Method: SAD position error exceeds threshold
- Autonomous Response: Swap sides of SAD, ADE, C&DH + Coms BDU
- Heritage: UARS

ompo-nent Links[1])	Failure	GN&CS Mode	Failure Detection	Action
A	n/a	• Acquisition - Rate Nulling • Acquisition - Local Vertical Acquisition • Acquisition - Yaw Gyro compassing (before HGA deployment)	not used	n/a
A (CTIU-C)	• HGA drive logic misinterprets commands[2] • Incorrect HGA elevation, azimuth telemetry • Obstruction to HGA motion[3]	• Acquisition - Yaw Gyro compassing (after HGA deployment) • Normal • Orbit Adjust	• HGA observed gimbal angle changes diverge from expected gimbal angle changes	• Terminate HGA motion commands • Command swap HGA sides

Links connect component with GN&CS FSW

HGA management software verifies transmitters OFF or not routed through HGA before commanding entry into don't-radiate zone

HGA gimbal required to tolerate hard stop. No requirement for antenna reflector to be strong enough to drive into obstacle & stall motor without damage to reflector

HGA Failures

Acquisition - Yaw Gyro compassing Mode (after HGA deployment); Acquisition - Stellar Acquisition; Acquisition - Update Filter; Normal; Orbit Adjust

- Detection Method: HGA observed gimbal angle changes diverge from expected gimbal angle changes
- Autonomous Response
  - Terminate HGA motion commands
  - Swap HGA sides
- Heritage: UARS

ompo-nent Links[1])	Failure	GN&CS Mode	Failure Detection	Action
vigation orithm	• Bad nav filter position/velocity estimate	• Acquisition • Normal • Orbit Adjust	• Difference with EOS orbit elements exceeds threshold • And either: - Attitude error from attitude determination algorithm disagrees with that from ESA1 & ESA2 • Or: - Significant Doppler data editing	• Transition to EOS orbit elements
vigation orithm	• Bad nav filter oscillator frequency estimate	• Acquisition • Normal • Orbit Adjust	• Difference with backup oscillator frequency value exceeds threshold • Difference between estimated position & velocity & EOS orbit elements exceeds threshold • Significant Doppler editing	• Transition to backup oscillator frequency value • Transition to EOS orbit elements

Links connect component with GN&CS FSW

Navigation Algorithm Failures

Acquisition Mode; Normal Mode; Orbit Adjust Mode

- Detection method
  - Bad position/velocity estimate
    - Difference with EOS orbit elements exceeds threshold
    - One or both of the following: Attitude Determination Algorithm disagrees with ESA1 & ESA2 or significant Doppler editing during Doppler pass
  - Bad oscillator frequency estimate
    - Difference with backup value exceeds threshold
    - Difference between estimated position & velocity & EOS orbital elements exceeds threshold
    - Significant Doppler editing during Doppler pass
- Autonomous Response
  - Bad position/velocity estimate: transition to EOS orbit elements
  - Bad oscillator frequency estimate: transition to backup frequency value & to EOS orbit elements

Heritage: new

ompo-nent Links[1])	Failure	GN&CS Mode	Failure Detection	Action
ta Load	Bad uplink data: • EOS orbit elements • TDRS orbit elements • TDRS state vector	• Acquisition • Normal • Orbit Adjust	• Difference from old orbit elements exceeds threshold • Difference of new TDRS state vector from old TDRS state vector exceeds threshold	• Use old orbit elements

Links connect component with GN&CS FSW

Data Load Failures

Acquisition Mode; Normal Mode; Orbit Adjust Mode

- **Detection Method**
  - **Difference from old orbit elements exceeds threshold**
  - **Difference of new TDRS state vector from old TDRS state vector exceeds threshold**
- **Autonomous Response: Use old orbit elements**
- **Heritage: ~~UARS~~(?)** UARS (Yes)

(DAS)

EPS BDU Failures

Acquisition - Rate Nulling Mode; Acquisition - Earth Acquisition Mode; Acquisition - Yaw Gyro compassing Mode; Acquisition - Stellar Acquisition Mode

- Detection Method
  - ESA1 & 2 both lose Earth
  - Other ESA1 or 2 indications that result in switch to Earth Pointing Safe Mode
- Autonomous Response
  - First item above: swap BDU sides; no mode change
  - Second item above: no action on EPS BDU
- Heritage: UARS

Acquisition - Update Filter Mode; Normal - Update Filter Mode; Orbit Adjust - Update Filter Mode

- Detection Method
  - ESA1 & 2 pointing errors exceed threshold, Attitude Determination Algorithm pointing errors ok
  - Other ESA1 or 2 indications that result in switch to Earth Pointing Safe Mode
- Autonomous Response
  - First item above: swap BDU sides; no mode change
  - Second item above: no action on EPS BDU
- Heritage: UARS

ACE Failures

- Detection Method
  - Multiple; race condition; TBD which method wins race in each mode
  - Not isolated as component failure - detected as part of sensor chain or effector chain
- Autonomous Response
  - TBD; depends on which detection method wins race
- Heritage: UARS

GN&C BDU Failures

- Detection Method
  - Multiple; race condition; TBD which method wins race in each mode
  - May or may not be isolated as a component failure - may be detected as part of sensor chain or effector chain
- Autonomous Response
  - TBD; depends on which detection method wins race
- Heritage: UARS

PROPS BDU Failures

Rate Nulling Mode; Orbit Adjust Mode

- Detection Method
  - Not isolated as a component failure
  - Effect of failure subject to detection methods for Thruster & PMEA failures
  - Three possible results of failure detection tests
  - TBD in EOS simulations which of three PROPS BDU power failure invokes
- Autonomous Response
  - Responses included in responses for thruster & PMEA failures, i.e., driven by results of failure detection tests
    - Detected by thruster control software - terminate thrust commands, return to previous GN&C mode - no effect on PROPS BDU
    - Detected by GN&C FDIR - swap sides of PROPS BDU, go to Safe Mode
    - Not detected - continue thruster control software commands to CTIU, destined for PMEA via PROPS BDU, until scheduled end of maneuver, then terminate thrust commands, return to previous GN&C mode - no effect on PROPS BDU
- Heritage - UARS(?)

CTIU Power Failure

- Method of Detection
  - Not isolated to a component failure
  - Effects of failure subject to detection method for SCC failure - loss of "SCC OK" signal
- Autonomous response
  - Safe Mode, pre-set ACE configuration, as in SCC failure
  - No effect on CTIU - swap by ground command only
- Heritage: new

C&DH + COMS BDU Power Failure

- Method of detection
  - Not isolated to component failure
  - Effects of failure subject to detection methods for SAD failures, S-Band Transponder failures and Navigation Data Load failures
- Autonomous response
  - If fail SAD test, swap sides of C&DH + Coms BDU
  - If fail S-Band Transponder or Navigation Data Load test, no effect on C&DH + Coms BDU
- Heritage
  - SAD test - UARS
  - S-Band Transponder or Navigation Data Load - new

S-Band Transponder Failures

Normal Mode; Orbit Adjust Mode

- Detection Method
  - Doppler data not ready flag from S-Band Transponder
  - CTIU time tag of Doppler sample marker pulse from S-Band Transponder indicates out-of-phase Doppler sampling
  - Significant Doppler sample editing by Navigation software
- Autonomous Response
  - Interrupt Doppler sampling
  - Save summary of Doppler sample editing for use in Navigation Algorithm FDIR
- Heritage: new

EOS–AM Spacecraft Program

Propulsion Subsystem FDIR

L. Rattenni
June 29, 1993

Propulsion Module Functional Block Diagram

MARTIN MARIETTA

MARTIN MARIETTA ASTRO SPACE

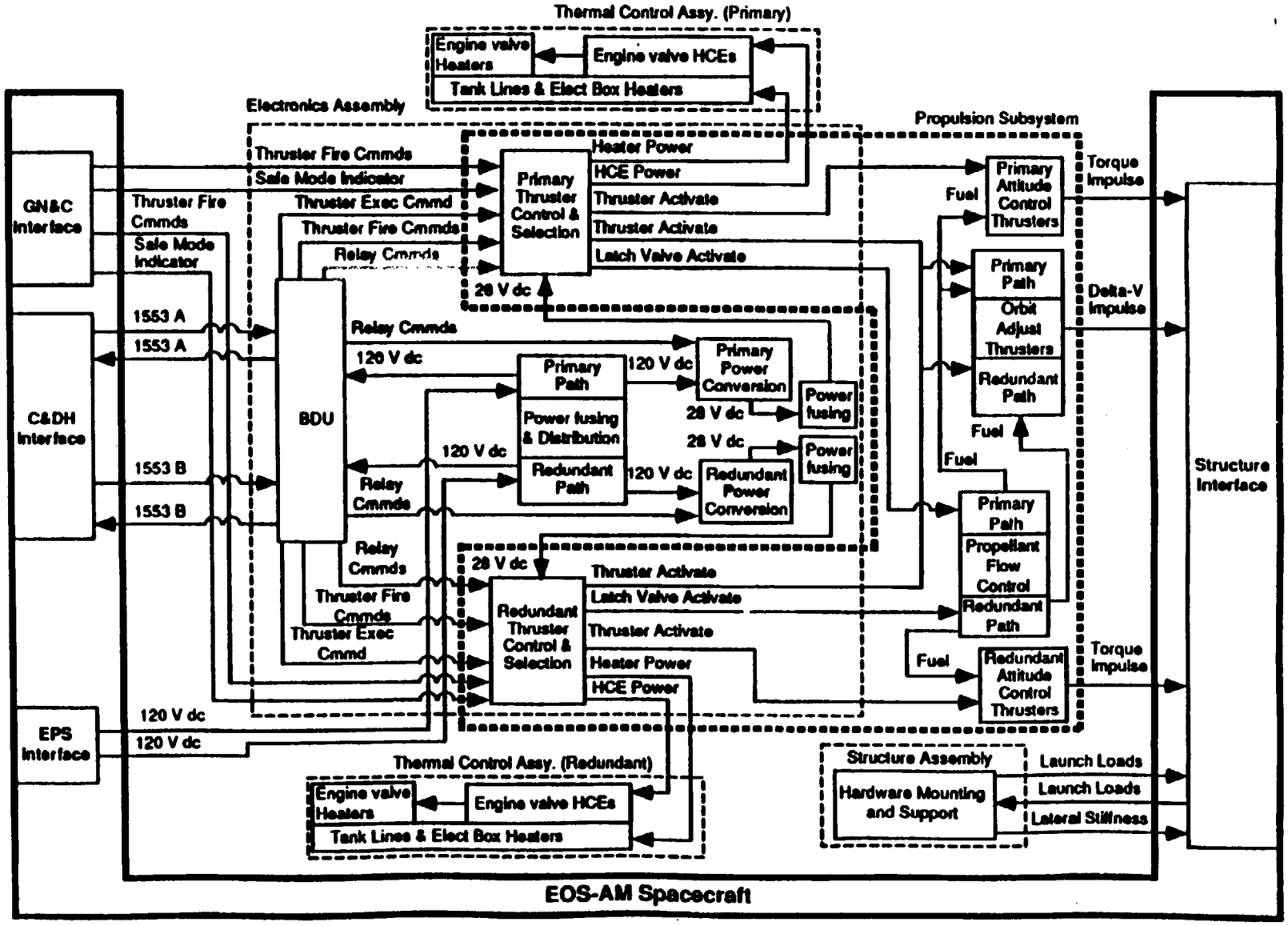

Propulsion Subsystem Schematic

MARTIN MARIETTA

MARTIN MARIETTA ASTRO SPACE

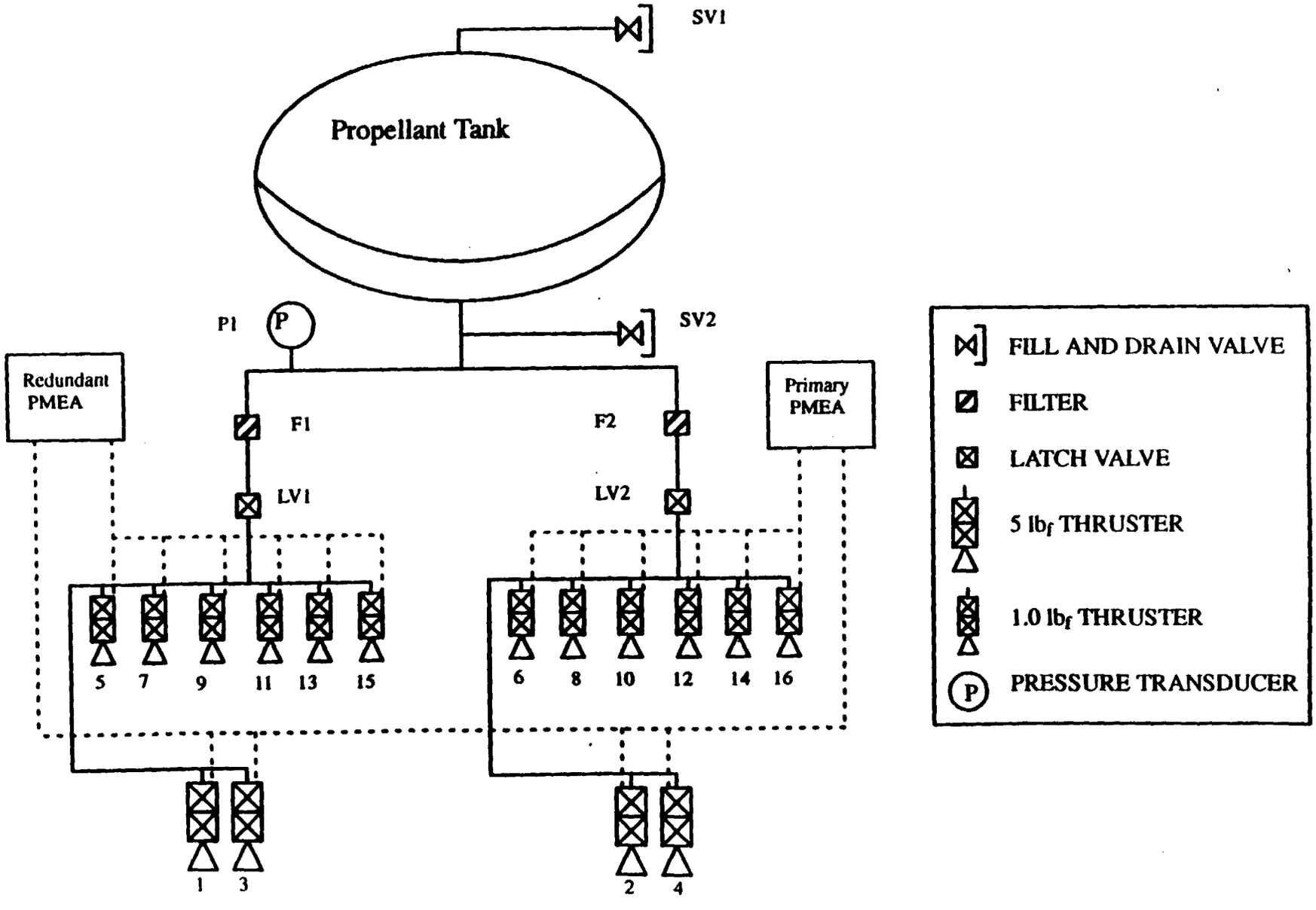

Faults, Effects, and Criticality

MARTIN MARIETTA

MARTIN MARIETTA ASTRO SPACE

Item or Function	Failure Mode	Propulsion Module Operating Mode	Possible Causes	Failure Effects a. Local or Subsystem b. Next Higher Assy. c. Spacecraft	Method of Detection/ Verification	Existing Compensating Features and Remarks	Spacecraft Level Criticality
Propellant tank	Loss of N2H4 propellant	1.) Quiescent 2.) Standby 3.) Attitude Control & Delta–V impulse	Weld failure	a: Loss of necessary N2H4 propellant for thruster maneuvers. b: Potential damage to Propulsion Module components c: Loss of mission life, potential contamination of instruments	Leakage detected by unanticipated pressure drop not due to temperature change or propellant use.	None. Tank leakage is extremely unlikely due to extensive pre–flight testing, qualification and design analysis.	High
Service valves	Leakage of N2H4	1.) Quiescent 2.) Standby 3.) Attitude Control & Delta–V impulse	Poor "o" ring seating, poor cap sealing interface or internal valve failure	a: Possible leakage of propellant through 1 of 2 redundant seals. b: n/a c: Loss of redundancy	Pressure Telemetry	Redundant seals in each valve. Two separate failures would have to occur before there was a loss of propellant from the system.	Low
Fuel lines	Loss of propellant	1.) Quiescent 2.) Standby 3.) Attitude Control & Delta–V impulse	Leak or rupture of fuel lines	a: Loss of propellant b: Potential damage to Propulsion Module components c: Loss of mission life, potential contamination of instruments	Pressure Telemetry	None. Fuel line leakage or rupture is extremely unlikely due to extensive pre–flight testing, qualification and design analysis.	High
Fuel filters	Loss of propellant supply to thrusters.	1.) n/a 2.) n/a 3.) Attitude Control & Delta–V impulse	Clogged filter	a: Complete or partial loss of propellant to one side of thrusters. b: n/a c: Loss of redundancy	Less than anticipated thrust following thruster activation	Use the redundant half system of thrusters. Filter contamination is extremely unlikely due to design margins and cleanliness procedures.	Low
Fuel filters	Loss of propellant	1.) Quiescent 2.) Standby 3.) Attitude Control & Delta–V impulse	External leakage due to weld failure	a: Loss of propellant b: n/a c: Loss of mission life	Pressure Telemetry	None. External leakage of the filter is extremely unlikely due to design analysis, qualification and pre–flight testing	High
Latch valve	Failure to open or close	1.) n/a 2.) Standby 3.) n/a	Mechanical failure	a: Loss of ability to isolate propellant tank from one half of thrusters. b: n/a c: Loss of redundancy	Pressure Telemetry	Valve normally opened and closed after thruster failure	Low
Pressure Transducer	Loss of N2H4 propellant pressure monitoring	1.) Quiescent 2.) n/a 3.) n/a	Part failure	a: Loss of ability to monitor the N2H4 propellant pressure. b: n/a c: Loss of back–up ability to gauge propellant quantity remaining.	Pressure Telemetry	Primary method of determining propellant quantity provided by thermal capacitance of propellant tank, book–keeping approach provided as back–up.	Low

Faults, Effects, and Criticality (continued)

MARTIN MARIETTA

MARTIN MARIETTA ASTRO SPACE

Item or Function	Failure Mode	Propulsion Module Operating Mode	Possible Causes	Failure Effects a. Local or Subsystem b. Next Higher Assy. c. Spacecraft	Method of Detection/ Verification	Existing Compensating Features	Spacecraft Level Criticality
1 lbf REA	Loss of REA thrust capability	1.) n/a 2.) n/a 3.) Attitude Control & Delta–V impulse	Part failure or loss of command capability	a: REA is unable to supply the necessary thrust capability for Spacecraft maneuvers. b: n/a c: Unable to perform required maneuvers using failed thruster. Use alternate thruster.	Autonomous detection via GN&CS or FDIR software.	Redundant thrusters, if leakage occurs, close half system latch valve and only use other half system.	Medium
5 lbf REA	Loss of REA thrust capability	1.) n/a 2.) n/a 3.) Attitude Control & Delta–V impulse	Part failure or loss of command capability	a: REA is unable to supply the necessary thrust capability for Spacecraft maneuvers. b: n/a c: Unable to perform required maneuvers. Use alternate thruster.	Autonomous detection via GN&CS or FDIR software.	Redundant thrusters, if leakage occurs, close half system latch valve and only use other half system.	Medium
1 lbf REA	Loss of propellant	1.) Quiescent 2.) Standby 3.) Attitude Control & Delta–V impulse	Leak of component welds or valve seats	a: Possible leakage of propellant through 1 of 2 redundant seals or through a welded interface. b: n/a c: Loss of internal component redundancy, loss of mission life	Pressure Telemetry	Redundant valve seats provided. Weld leakage or rupture is extremely unlikely due to extensive pre–flight testing, qualification and design analysis.	Low to Medium
5 lbf REA	Loss of propellant	1.) Quiescent 2.) Standby 3.) Attitude Control & Delta–V impulse	Leak of component welds or valve seats	a: Possible leakage of propellant through 1 of 2 redundant seals or through a welded interface b: n/a c: Loss of internal component redundancy, loss of mission life	Pressure Telemetry	Redundant valve seats provided. Weld leakage or rupture is extremely unlikely due to extensive pre–flight testing, qualification and design analysis.	Low to Medium
PMEA	Inadvertent firing of REA's	1.) n/a 2.) n/a 3.)Attitude Control & Delta–V impulse	Failure in REA control logic Electrical short from REA solenoid to ground	a: Loss of ability to command REA's in one half system. b: n/a c: Loss of PMEA redundancy and ACS thruster redundancy.	Autonomous detection via GN&CS or FDIR software Telemetry	Only enabled & armed REA's can fire inadvertently. S/C autonomously enters safe mode. There are redundant PMEA's and ACS thrusters. GN&CS FDIR senses attitude errors terminates thrust.	Medium

Faults, Effects, and Criticality (continued)

MARTIN MARIETTA

MARTIN MARIETTA ASTRO SPACE

Item or Function	Failure Mode	Propulsion Module Operating Mode	Possible Causes	Failure Effects a. Local or Subsystem b. Next Higher Assy. c. Spacecraft	Method of Detection/ Verification	Existing Compensating Features	Spacecraft Level Criticality
PMEA	Incorrect REA fire pulse widths.	1.) n/a 2.) n/a 3.) Attitude Control & Delta-V impulse	Failure in REA control logic	a: Response to REA fire commands is erratic in one half system. b: n/a c: Disturbance torques, loss of PMEA redundancy and ACS thruster redundancy.	Autonomous detection via GN&CS or FDIR software. Telemetry	S/C autonomously enters safe mode. There are redundant PMEA's and ACS thrusters. GN&CS FDIR senses attitude errors terminates thrust.	Medium
PMEA	Inability to fire REA's	1.) n/a 2.) n/a 3.) Attitude Control & Delta-V impulse	Failure in REA control logic Loss of power from PMEA supply	a: Loss of ability to command REA's in one half system. b: n/a c: Disturbance torques, loss of PMEA redundancy and ACS thruster redundancy.	Autonomous detection via GN&CS or FDIR software. Telemetry	S/C autonomously enters safe mode. There are redundant PMEA's and ACS thrusters. GN&CS FDIR senses attitude errors terminates thrust.	Medium
PMEA	Inability to generate relay drive commands	1.) n/a 2.) Standby 3.) Attitude Control & Delta-V impulse	Failure in relay drive logic Loss of power from PMEA supply	a: Loss of ability to apply/remove power to REA's, latch valves, heaters, & pressure transducer. b: n/a c: Loss of PMEA redundancy and ACS thruster redundancy.	Telemetry	There are redundant PMEA's and ACS thrusters.	Low
PMEA	Loss of PMEA serial telemetry	1.) n/a 2.) Standby 3.) Attitude Control & Delta-V impulse	Failure in telemetry logic Loss of power from PMEA supply	a: Loss of status for PMEA relays and/or REA control. b: n/a c: Loss of PMEA redundancy and ACS thruster redundancy.	Absence of PMEA telemetry response, other subsystem telemetry available	There are redundant PMEA's and ACS thrusters.	Low
PMEA	Loss of power from internal power supply	1.) n/a 2.) Standby 3.) Attitude Control & Delta-V impulse	Failure in PMEA power supply Loss of 28V power to PMEA power supply	a: PMEA is inoperative. b: n/a c: Loss of PMEA redundancy and ACS thruster redundancy.	Telemetry	There are redundant PMEA's and ACS thrusters.	Low

Propellant Leakage

- Sources of propellant leakage include the propellant tank, service valves, filters, latching valves, and propellant lines. Propellant tank and lines are not considered as credible single point failures. Although the propellant tank and lines are identified as highly critical to mission success these items are not configured in a redundant fashion. Instead, subsystem level proof pressure, environmental, and leak testing are performed to verify integrity.
- Method of Detection:
  - Pressure transducer telemetry.
- Autonomous Response:
  - To preclude engine weld leakage and reduce risk of valve seat leakage isolate engine manifold downstream of subsystem latching valves. This is identified as a potential FDIR implementation item.
- Heritage:
  - None identified
- Future Plans:
  - Evaluate FDIR activation of subsystem latching valves in response to pressure telemetry versus maintaining subsystem latch valves in a closed position.

Thruster Component Failure

- Method of Detection:
  - Autonomous detection by GN&C subsystem via earth attitude and/or angular rate detection. GN&CS FDIR software utilized for detection in situations where normal GN&CS algorithms are unable to detect failure.
- Autonomous Response:
  - Abort attitude control and/or delta–V thruster maneuver
  - Switch to safe mode
- Heritage:
  - UARS

PMEA Thruster Control Failures

- Method of Detection:
  - Autonomous detection by GN&C subsystem via attitude and/or angular rate detection. GN&CS FDIR software utilized for detection in situations where normal GN&CS algorithms are unable to detect failure.
  - PMEA telemetry includes status on REA firings, safe mode, and thruster command integrity
- Autonomous Response:
  - Abort attitude control and/or delta–V thruster maneuver
  - Switch to safe mode
- Heritage:
  - UARS

Thermal Control Subsystem FDIR

D.Chalmers

June 29th, 1993

Thermal Subsystem Functional Block Diagram

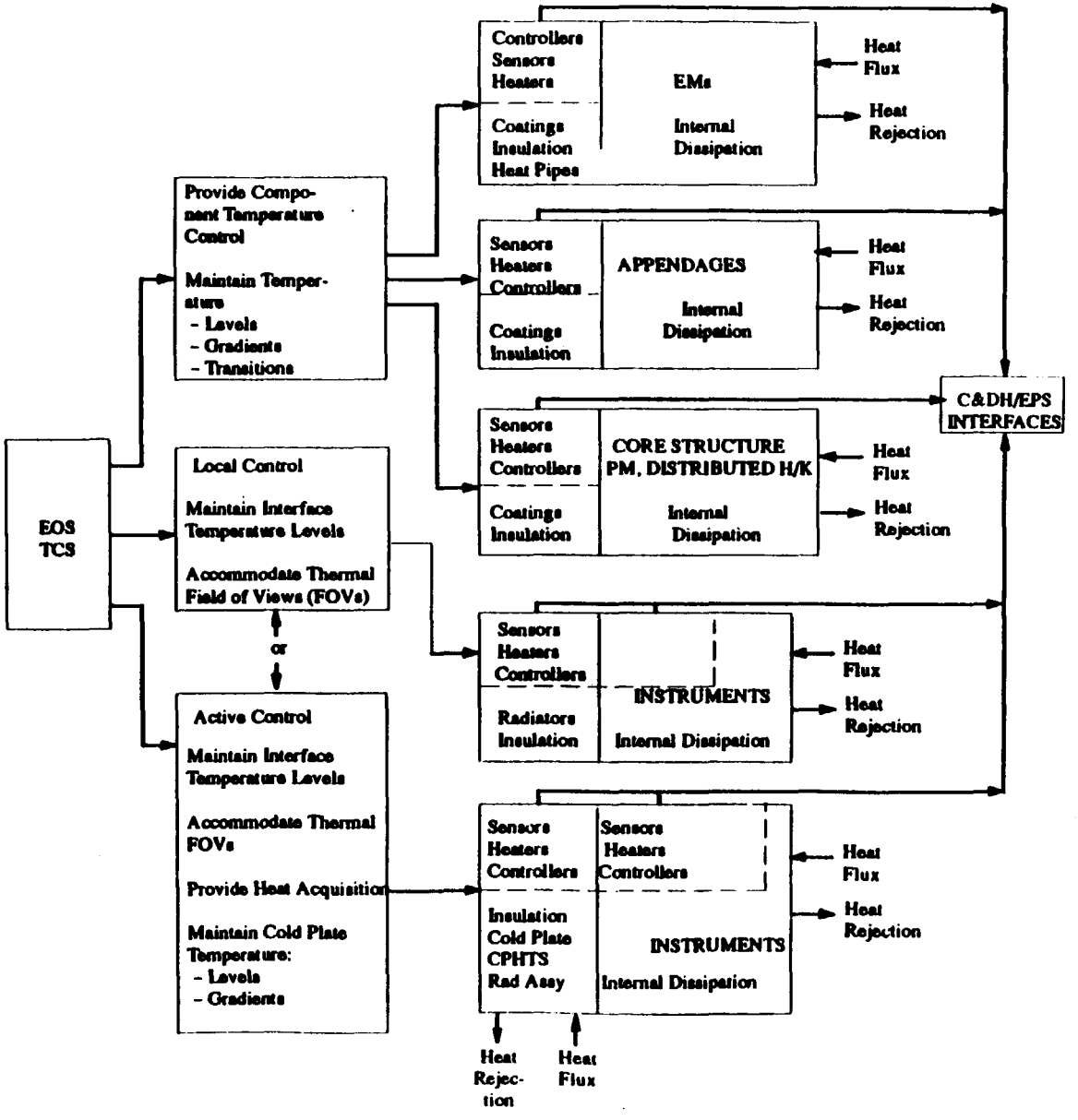

DC

Overview

- EOS–AM Thermal Control Subsystem (TCS) is functionally designed to tolerate a single point failure
- Passive TCS elements have no critical FDIR requirements, i.e.;
  - Radiators are sized to accommodate degradation from contamination/ environmental effects
  - MLI has multiple layers, attach points and grounding paths
  - Thermal interfaces are designed and tested to easily withstand launch load effects
- Active TCS elements have several critical FDIR requirements
  - Heater Control Electronics (HCE) including heaters, thermostats and sensors
  - Thermostatically controlled heaters for Propulsion Module (PM) equipment
  - Capillary Pumped Heat Transfer System (CPHTS) for active Instrument accommodation on MOPITT, ASTER–TIR & ASTER–SWIR
  - Temperature sensors/telemetry and command status telemetry
  - Note that equipment module (EM) heat pipes have no critical FDIR requirements

HCE: Faults, Effects & Criticality

HCE type	Function	Failure	Detect	Criticality	Effect	Comments
2	General Purpose	Heater stuck off	Telemetry	Medium	Potential for Batteries & CPHTS Reservoirs to exceed design allowables within 6 hrs	Further explanation on separate viewgraph
2	General Purpose	Heater stuck on	Telemetry	Medium	Potential for several component temps to exceed design allowables within 6 hrs	Further explanation on separate viewgraph
3	CPHTS Reservoir	Heater stuck on or off	Telemetry	Medium	Potential for Instrument temps to exceed design allowables within 6 hrs	Further explanation on separate viewgraph
4	PM TCV	Heater stuck on	Telemetry	Medium	Potential for TCV temps to exceed upper design allowables within 6 hrs	Further explanation on separate viewgraph
4	PM TCV	Heater stuck off	Telemetry	Low	No component temps will exceed lower design allowables within 6 hrs	Staggered primary and back-up set points
5	Battery	Heater stuck on or off	Telemetry	Medium	Potential for temps to exceed design allowables within 6 hrs	Further explanation on separate viewgraph

TCV=Thrust Control Valve

Thermostatically Switched Heaters: Faults, Effects & Criticality

Failure	Detect	Criticality	Effect	Comments
Heater stuck on	Telemetry	Low	No PM component temps exceed upper design allowables within 6 hrs	Series thermostats ensure protection against heater stuck on
Heater stuck off	Telemetry	Low	No PM component temps exceed lower design allowables within 6 hrs	1. High propellant tank thermal capacity 2. Primary and back-up heater thermostat set points will be offset . Both will be enabled.
Thermostat stuck closed	Telemetry	Low	No PM component temps exceed upper design allowables within 6 hrs	Series thermostats ensure protection against thermostat stuck closed
Thermostat stuck open	Telemetry	Low	No PM component temps exceed lower design allowables within 6 hrs	1. High propellant tank thermal capacity 2. Primary and back-up heater thermostat set points will be offset . Both will be enabled.

CPHTS: Faults, Effects & Criticality

Failure	Detect	Critical-ity	Effect	Comments
CPHTS leak	Teleme-try	Medium	Potential for CPHTS and Instrument temps exceed upper design allowables within 6 hrs	Further explanation on separate viewgraph
CPHTS degrada-tion	Teleme-try	Low	No CPHTS and Instrument temps exceed upper design allowables within 6 hrs	Degradation mechanisms all gradual – adequate warning available for corrective action
CPHTS Pres-sure switch	Teleme-try	Low	No CPHTS and Instrument temps exceed upper design allowables within 6 hrs	Normal Instrument and CPHTS temperature telemetry will confirm faulty pressure switch
CPHTS heat pipe leak	Teleme-try	Medium/ Low	Potential for CPHTS and Instrument temps exceed upper design allowables within 6 hrs	1. Failure of HPHX .. same procedure as CPHTS leak 2. Physical heat pipe redundancy for spreaders will ensure normal operation even with one failure

Temperature Sensor/Telemetry: Faults, Effects & Criticality

Failure	Detect	Critical-ity	Effect	Comments
Loss of temp te-lemetry	Teleme-try (lack of)	Low	Missing component temper-ature data	Critical components will have more than one temper-ature sensor
Loss of com-mand te-lemetry	Teleme-try (lack of)	Low	Cannot determine command status (HCE, CPHTS, etc.)	Switch to back–up function (by flight software or ground command)

Critical Fault: HCE/heater stuck off

- "Medium critical" applicable to all HCE types 3 & 5(TBR)
- Detected by heated component telemetry falling below allowable alarm limits
- Autonomous response:
  - Check validity of telemetry (vs expected range)
  - Check HCE status
    - -- If HCE enabled ... then switch to back-up HCE
    - -- If HCE disabled ... then enable HCE
  - Send signal to ground
  - Under temp thermostats protect against catastrophic failure
- For PM TCV HCEs (Type 4), and components requiring operational heaters (HCE Type 2s), both the primary and backup heater circuits will be enabled. Set points will be staggered to ensure backup comes on only after primary failure.

Critical Fault: HCE/heater stuck on

- "Medium critical" applicable to HCE types 3, 4 & 5 only
- Detected by heated component temperature telemetry rising above allowable alarm limits
- Autonomous response:
  - **Check validity of telemetry (vs expected range)**
  - **Check HCE status**
    - -- **If HCE enabled ... then disable HCE**
    - -- **If HCE disabled ... then check other potential failure paths, i.e., component operation, etc.**
  - **Send signal to ground**
- CPHTS Reservoir HCEs (type 3) have overtemp (survival) cut off to protect CPHTS. Impossible to use this method to protect against exceeding design allowables due to tight CPHTS <u>operating</u> range (20 to 25 degC).
- Battery HCEs (type 5) have overtemp (survival) cut off to protect Battery cells. Impossible to use this method to protect against exceeding design allowables due to tight Battery <u>operating</u> range (-5 to 10 degC).
- Type 2 does not have any critically affected heaters

Critical Fault: CPHTS Leak

- Detection:
  1. **Pressure switch indicates low pressure in CPHTS**
  2. **CPHTS temperatures exceed design allowables**
  3. **Instrument temperatures exceed design allowables**
- Autonomous response:
  - **Determine if leak has ocurred (minimum of 1 & 3 above)**
  - **Command affected Instrument to "~~safe~~" mode (stand–by or off)**
    Low Power.
  - **Enable survival HCEs**
- This will be the first time usage of this software

Conclusions/Issues

- All critical failure scenarios are "medium" or "low"
- TCS hardware implemented FDIR features include:
  - CPHTS Reservoir HCE3s and Battery HCE5s have high and low thermostat protection
  - Thermostatically controlled heaters: series thermostats (protects against stuck on thermostat/heater)
- TCS operationally implemented FDIR features include;
  - Primary and backup circuits enabled for HCE4s and required HCE2s
- TCS software implemented FDIR features include:
  - Temperature telemetry monitoring (compares to alarm limits)
  - CPHTS leak detect and response

EOS–AM Spacecraft Program

Electrical Power Subsystem FDIR

N. Nassar
June 29, 1993

EPS Detail Block Diagram

MARTIN MARIETTA

MARTIN MARIETTA ASTRO SPACE

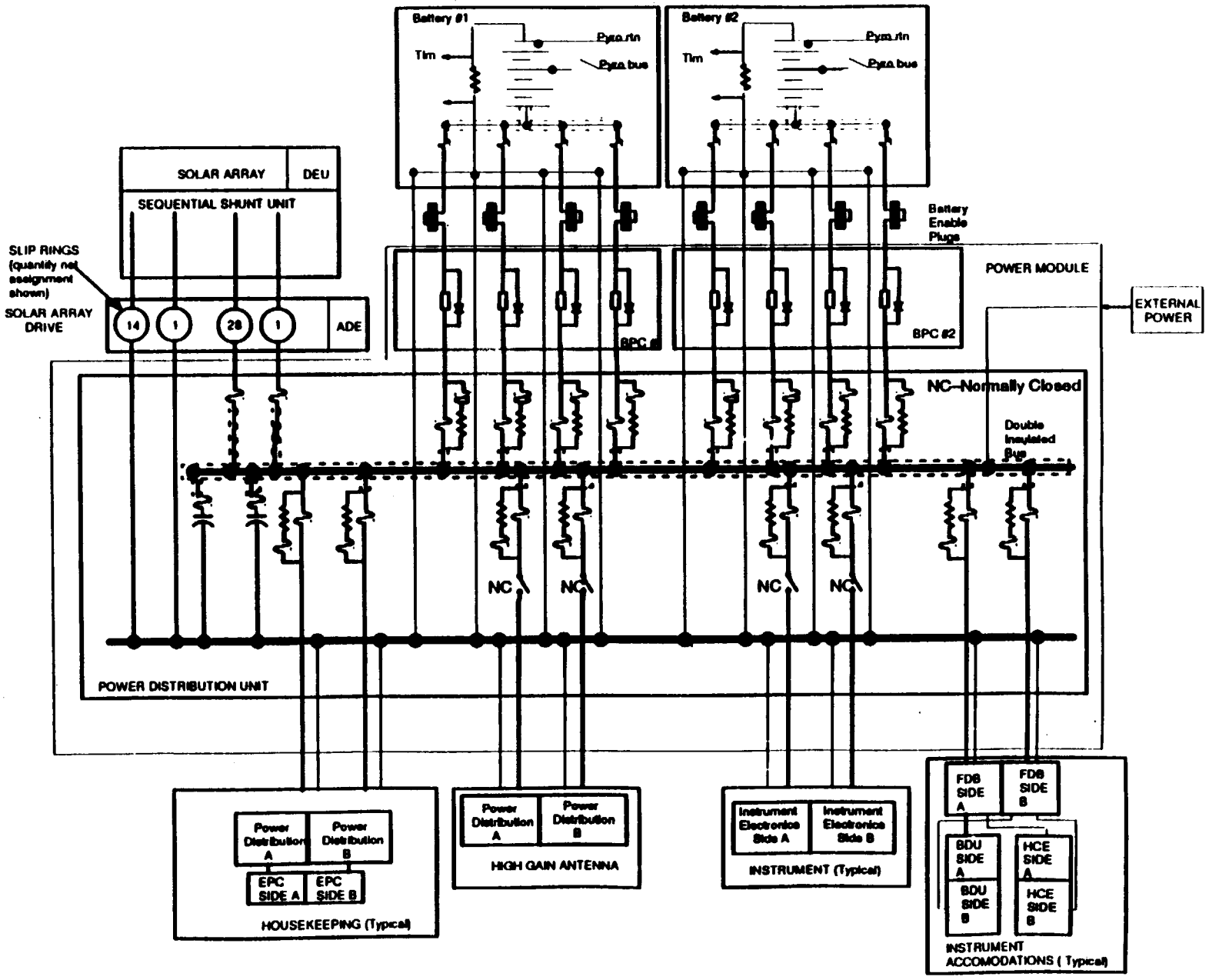

BAT: Faults, Effects & Criticality

MARTIN MARIETTA

MARTIN MARIETTA ASTRO SPACE

BAT Item	Func-tion	Failure	Detect	Criti-cality	Effect	Comments
BPM	Cell Press	No Output	Tlm	Low	No Effect Loss of Tlm	4 BPMs available, data for information only
Therm-istor	Cell Temp.	No Output	Tlm	Low	No Effect Loss of Tlm	4 cell temps available, data for information only
Therm-istor	Panel Temp.	No Output	Tlm	Low	No Effect Loss of Tlm	2 panel temps avail-able, data for information only
Meter Shunt	BAT Current	No cir-cuit Output	Tlm	Low	No Battery Manage-ment	Battery not charged properly
Cells	Power-Source	Open Cell	Tlm	High	Loss of Battery	Drop in Bus Voltage
Cells	Power-Source	Cell Short ed	Tlm	Low	Loss of a Cell	Sufficient BAT margin to tolerate a single cell short in each BAT.
V/T Sensor	Provide V/T Signal	No Output	Tlm	Med	Loss of V/T function	Battery Life Reduced due to battery over-temperature

Battery Open Cell Fault

- FDIR Feature: Thermally Actuated Bypass Switch (TABS)
- Detection:
  - Battery current flows through TABS
- Autonomous Response:
  - Open cell is bypassed by TABS circuitry. Thermally activated switch will shunt battery current around the open cell.
  - TABS is a new design, and will be qualified at the component and workhorse BAT level.
- Heritage:
  - New Design

V/T Sensor Circuitry Fault

MARTIN MARIETTA

MARTIN MARIETTA ASTRO SPACE

- FDIR Feature: Three V/T sensor circuits per Battery with H/W voting in PDU Mode Controller
- Detection:
  - S/W Monitors Battery temperature telemetry and indicates if value is out of defined operational range
- Autonomous Response:
  - Voter in PDU Mode Controller assesses V/T signals from each Battery
- Heritage:
  - Telstar

BPC: Faults, Effects & Criticality

MARTIN MARIETTA

MARTIN MARIETTA ASTRO SPACE

BPC Channel	Function	Failure	Detect	Criticality	Effect	Comments
Channel Control and Power Electronics	Supplies Power to and From Bus	Open: Over-current Over tem-pera-ture Over Voltage	No Channel output	Med	Propagation of fail-ure to other BPC channels	Modular design 4 Channels per BPC
Channel Control and Power Electronics	Supplies Power to and From Bus	Short ed	No Channel output Short puts ex-cessive load on main bus	Med	Excessive load on main bus	Drop in bus Voltage

BPC Channel Faults

- FDIR Feature: H/W implemented failure detection built in each BPC channel. Each BPC channel has fuses on battery and bus side
- Detection: H/W implemented circuit detects out off limit BPC channel over current, over temperature, and overvoltage
- Autonomous Response:
  - If channel failure detector detects out of limit current, temperature,and voltage channel is taken off line. A faulted channel may be shut down by ground control. However, a H/W interlock is provided so that only one channel in each BPC can be taken off line. Further, if a channel draws excessive current from the bus due to a internal short either the bus side fuse or battery side fuse will clear the shorted channel
- Heritage: Telstar

ADE: Faults, Effects & Criticality

MARTIN MARIETTA

MARTIN MARIETTA ASTRO SPACE

ADE Item	Function	Failure	Detect	Criti-cality	Effect	Comments
Drive Circuit	Turns Array	SA Motor Stops	Pot Tlm	Med	Loss of energy balance	Reduction in S/A output
Safe Hold Circuit	Cmds Drive in Safe Mode	Circuit takes over in Normal Mode	Serial Tlm	Low	Degraded pointing accu-racy	Coarse Sun Sensor positioning loop is not as accurate as prime pointing sys-tem
EPC	Powers ADE circuit	Loss of sec-ondary Power	Pot Tlm	Med	Loss of energy balance	Array will stop, Reduction in S/A output
Rate Generation Circuit	Determine rate & direction of Solar Array	Reversal of direction, erroneous rate	Serial Tlm	Med	Loss of energy balance	Reduction in S/A output

All ADE Faults

- FDIR Feature: GN&C S/A S/W Algorithm
- Detection: Compares SAD potentiometer outputs (actual S/A position) to estimated position
- Autonomous Response:
  - If comparison of actual S/A position exceeds the set threshold S/W switches to redundant ADE, BDU and SAD motor winding
- Heritage: UARS

PDU: Faults, Effects & Criticality

MARTIN MARIETTA

MARTIN MARIETTA ASTRO SPACE

PDU CKT	Func-tion	Failure	Detect	Critical-ity	Effect	Comments
Cmd Decod-er	C/R & V/T cmds	Loss of pwr/IC failure	Tlm	Medium	No Control of Battery Man-agement	Battery not charged properly
Mode Con-troller	BPC/ SSU control	Loss of pwr/IC failure	Tlm	High	Loss of EPS bus regulation	Out of Regulation
EPC	PDU bias power	Output over-voltage	Tlm	High	Loss of EPS bus regulation	Out of Regulation
Bat Cur Tlm Amp	BAT Current	No cir-cuit Output	Tlm	Med	No Control of Battery Man-agement	Battery not charged properly
Cap Bank	Pro-vides filtering to loads	One ca-pacitor shorts	Tlm	High	Excessive main bus load due to a shorted capacitor	Loss of energy balance due to excessive bus load

Command Decoder Fault

- FDIR Feature: – H/W – Implemented Fail – Safe circuitry in each Command Decoder
- Detection: EPS Battery Telemetry
- Autonomous Response:
  - If command decoder fails to respond to the commanded charge or V/T levels the resultant charge rate will not be lower than the commanded rate nor be higher than 23 Amperes. The resultant V/T will follow the V/T curve for the maximum battery voltage of 90 volts.
- Heritage: New Design

Mode Controller Fault

- FDIR Feature: H/W majority voting in PDU Mode Controller
- Detection: EPS Bus Voltage and Current Telemetry
- Autonomous Response:
  - Loss of 1 out of 3 control signals is voted out by majority voter.
- Heritage: Telestar and other S/C programs

PDU EPC Overvoltage Fault

MARTIN MARIETTA

MARTIN MARIETTA ASTRO SPACE

- FDIR Feature: Each PDU EPC has built in H/W overvoltage protection circuitry
- Detection: EPC output voltage exceed the preset limit
- Autonomous Response:
  - If EPC output voltage exceeds the set threshold the EPC is taken off line. Backup EPC powers PDU bias circuitry.
- Heritage: Telstar and other S/C programs

Battery Current Telemetry Amplifier Fault

MARTIN MARIETTA

MARTIN MARIETTA ASTRO SPACE

- FDIR Feature: On–Line redundant conditioning circuitry/S/W voting in SCC
- Detection:
  - S/W addresses TLM output from each Tlm circuitry
- Response:
  - S/W selects which Tlm to use based on current thresholds
- Heritage:
  - Inmarsat–3 and other S/C programs

Capacitor Bank Fault

- FDIR Feature: Each pair of caps (64 pairs) fused; 3 pairs are redundant
- Detection:
  - Capacitor pair current
- Autonomous Response:
  - Fuse clears shorted capacitor pair. Main bus protected from shorted capacitors
- Heritage:
  - Telstar, and other S/C programs

SSU: Faults, Effects & Criticality

MARTIN MARIETTA

MARTIN MARIETTA ASTRO SPACE

SSU CKT	Function	Failure	Detect	Criticality	Effect	Comments
Power Shunt	Shunts SA circuit I	Shunt Power Switch Open	Must be derived from other Tlm	Low	One SA circuit power will be unshuntable	Not perceptible if sufficient load on bus
Power Shunt	Shunts SA circuit I	Shunt Power Switch Short	Must be derived from other Tlm	Low	One SA circuit power will not be available to the EPS	Sufficient SAA power available from remaining circuits
EPC	SSU Bias Power	Output over–voltage	EPC I Tlm	High	Loss of EPS bus regulation	Out of Regulation
CMD DEC	Decodes cmds	CMD Dec Failed	Via Tlm	Low	Loss of 1 command decoder function	Loss of primary command function
Tlm Enc	Encodes Tlm	TLM Enc Failed	Via Tlm	Low	Lose 1 TLM encoder function	Loss of primary Tlm function
Shunt control	Shunt control signal for regulation	SSU Control Signal from PDU Failed	Via Tlm	High	Loss of bus regulation	Main bus collapse

SSU EPC Overvoltage Fault

MARTIN MARIETTA

MARTIN MARIETTA ASTRO SPACE

- FDIR Feature: Each SSU EPC has built in H/W overvoltage protection circuitry
- Detection: EPC output voltage exceeds the preset limit
- Autonomous Response:
  - If EPC output voltage exceeds the set threshold the EPC is taken off line. Backup EPC powers critical SSU circuitry.
- Heritage: Telstar and other S/C programs

Shunt Controller Fault

MARTIN MARIETTA

MARTIN MARIETTA ASTRO SPACE

- FDIR Feature: H/W majority voting in SSU Shunt Controller
- Detection: EPS Bus Voltage and Current Telemetry
- Autonomous Response:
  - Loss of 1 out of 3 control signals is voted out by majority voter.
- Heritage: Telestar and other S/C programs

SAA: Faults, Effects & Criticality

MARTIN MARIETTA

MARTIN MARIETTA ASTRO SPACE

SAA Item	Function	Failure	Detect	Criti-cality	Effect	Comments
SAA Circuit	Powers EPS BUS	SAA Circuit Open	SAA TLM	Low ?	One SAA circuit power will be lost	No effect on EPS capability 1/24 loss(4.2%) in Bus power
SAA Circuit	Powers EPS BUS	SAA Circuit Short	SAA TLM	Low ?	One SAA circuit power will be lost	No effect on EPS capability 1/24 loss(4.2%) in Bus power

SAA Solar Array Circuit Failed Open

- FDIR Feature: SAA Solar Array circuit fails open.
- Detection: SAA health TLM.
- Autonomous Response:
  - SAA has available 24 SAA circuits to power the EPS Bus. The loss of one of these circuits will reduce the Solar Array capability by 1/24 or 4.2 %.
- Heritage: Telstar and other S/C programs

SAA Solar Array Circuit Failed Short

MARTIN MARIETTA

MARTIN MARIETTA ASTRO SPACE

- FDIR Feature: SAA Solar Array circuit fails short.
- Detection: SAA health TLM.
- Autonomous Response:
  - SAA has available 24 SA circuits to power the EPS Bus. The loss of one of these circuits will reduce the Solar Array capability by 1/24 or 4.2 %. Further, each Solar Array SA circuit is isolated from the EPS Bus by a series blocking diode in the SSU and a fuse in the PDU. The blocking diode will protect the EPS Bus from a short at the SA circuit level. If the diode shorts(second failure) the fuse in the PDU will clear and further protect the EPS Bus.
- Heritage: Telstar and other S/C programs

EOS–AM Spacecraft Program

Communications Subsystem FDIR

T. Milbourne

June 29, 1993

Communication Subsystem Faults, Effects, and Criticality

Approach

- Examine faults, effects, and criticality organized on a functional basis
  - S Band Communications
  - DAS Subsystem
  - KSA Subsystem

S Band Communications (cont.)

Item	Failure	Effects	Time Criticality	Remarks
SBT	receiver	loss of command path capability at selected receiver data rate	low	hot standby receiver at all times
	transmitter	loss of 1 telemetry path	low	
	data outputs (Prime & Red) of first transponder with good RF carrier and bit lock	dependent on CTIU command handling	medium	handled by CTIU validation of synch
GN&C/SCC	no update or incorrect TONS frequency offset word	extended time to acquire prime SBT (multiple TDRSS forward link sweeps)	low	backup transponder set to nominal receive frequency
HGA	MDA, gimbal (pointing capability)	achievable command rate via TDRSS limited to 125 bps achievable telemetry rate limited via TDRSS to 1 kbps on zenith omni	low	GN command/telemetry of 2 kbps/1, 16, 512 kbps
Prime Power	interruption	transponder power up to 125 bps command rate	low	

S Band Communications

Item	Failure	Effects	Time Criticality	Remarks
SBIU	SBT1 Omni/HGA transmit switch	achievable telemetry rate limited to 1 kbps on SBT1 if omni only	low	
	SBT2 Omni/HGA transmit switch	achievable telemetry rate limited to 1 kbps on SBT2 if omni only	low	
	Nadir/Zenith Omni transmit switch	reduced telemetry flexibility between TDRSS and GN	low	
	HGA LHCP/RHCP switch	reduced telemetry flexibility to TDRSS	low	
Master Oscillator	4 MHz reference to SBT's	degraded RF reference and transponder acquisition accuracy (TONS)	low	Transponder Internal TCXO backup

S Band Communications (cont.)

- Redundant command interface from each transponder cross strapped to CTIUs

- S Band Transponder single point failure exists where RF carrier and bit lock could be indicated but data bad to both CTIUs (failure upstream of redundant output drivers).
  - CTIUs originally selected command from SBT with first indication of carrier and bit lock (one CTIU to respond based on address bit in command)
  - CTIU synch validation added to preclude selection of transponder with bad data failure mode
  - For data failure during contact, loss of bit or RF lock resets CTIU to search for valid input from either transponder

Command transfer from SBT to CTIU guaranteed by cross strapping and CTIU synch validation

S Band Communications (cont.)

- Received commands available to both transponders from all antennas
  - No switches in receive path
  - HGA LHCP and RHCP, Nadir and Zenith omni combined in hybrid and coupler
- Receiver cannot be commanded off
  - No switches in 120 volt bus to SBT
  - No power switch for SBT receiver
- One transponder configured to receive high rate commands and the other to receive low commands in support of omni link in case of HGA misspointing to TDRS
  - GN command backup at 2 kbps via Nadir Omni available independent of TDRSS availability and selected data rate
- Transponder has internal TCXO as backup to Master oscillator reference
  - Maintains nominal receiver frequency to within 25 kHz
  - Requires wider frequency swept U/L for acquisition

CMD reception via SBT guaranteed by passive receive on OMNI's and HGA, hot standby/low rate nominal frequency SBT, and hot backup internal TCXO

SBIU Block Diagram

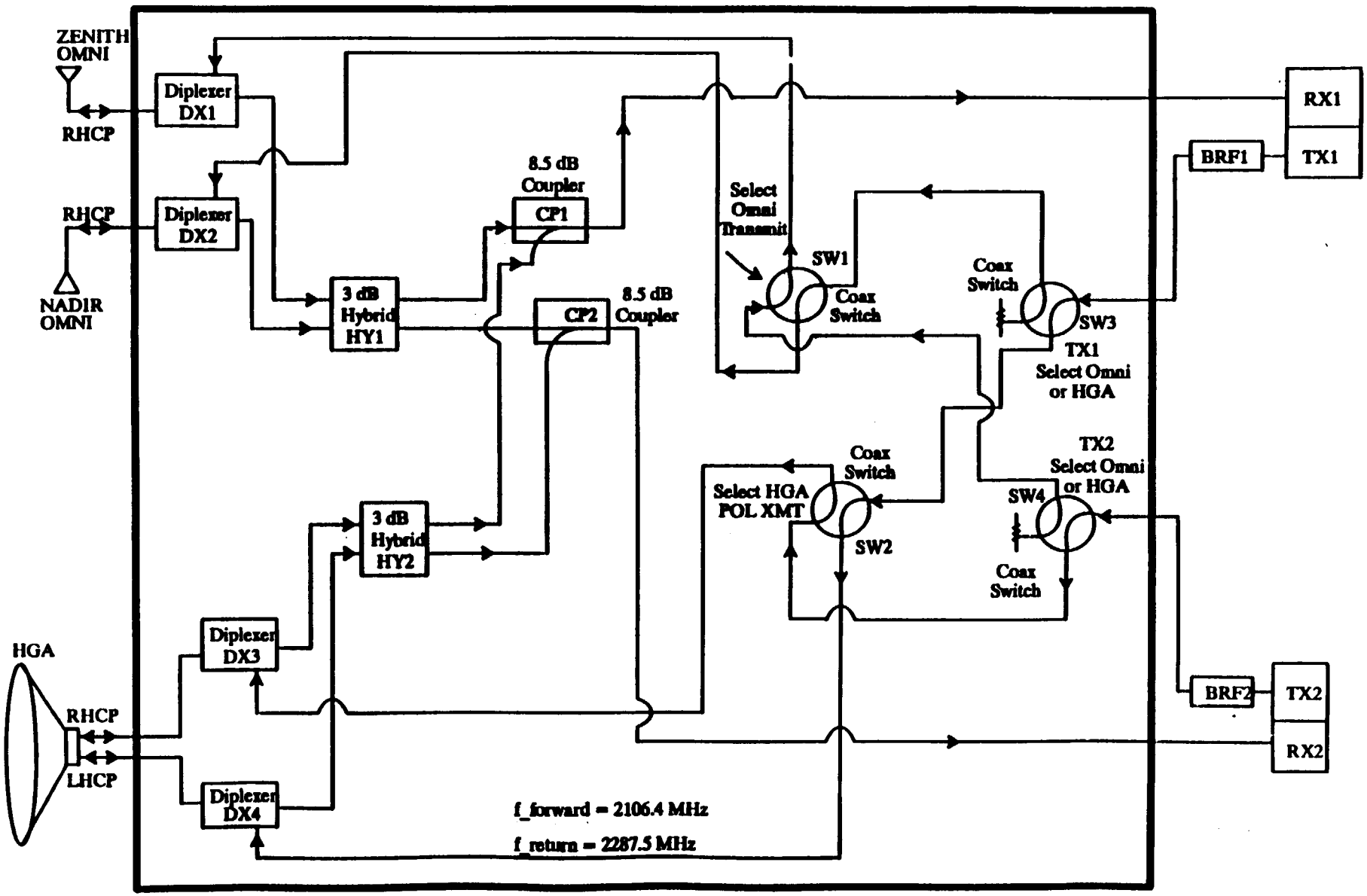

S-band Communications Subsystem Block Diagram

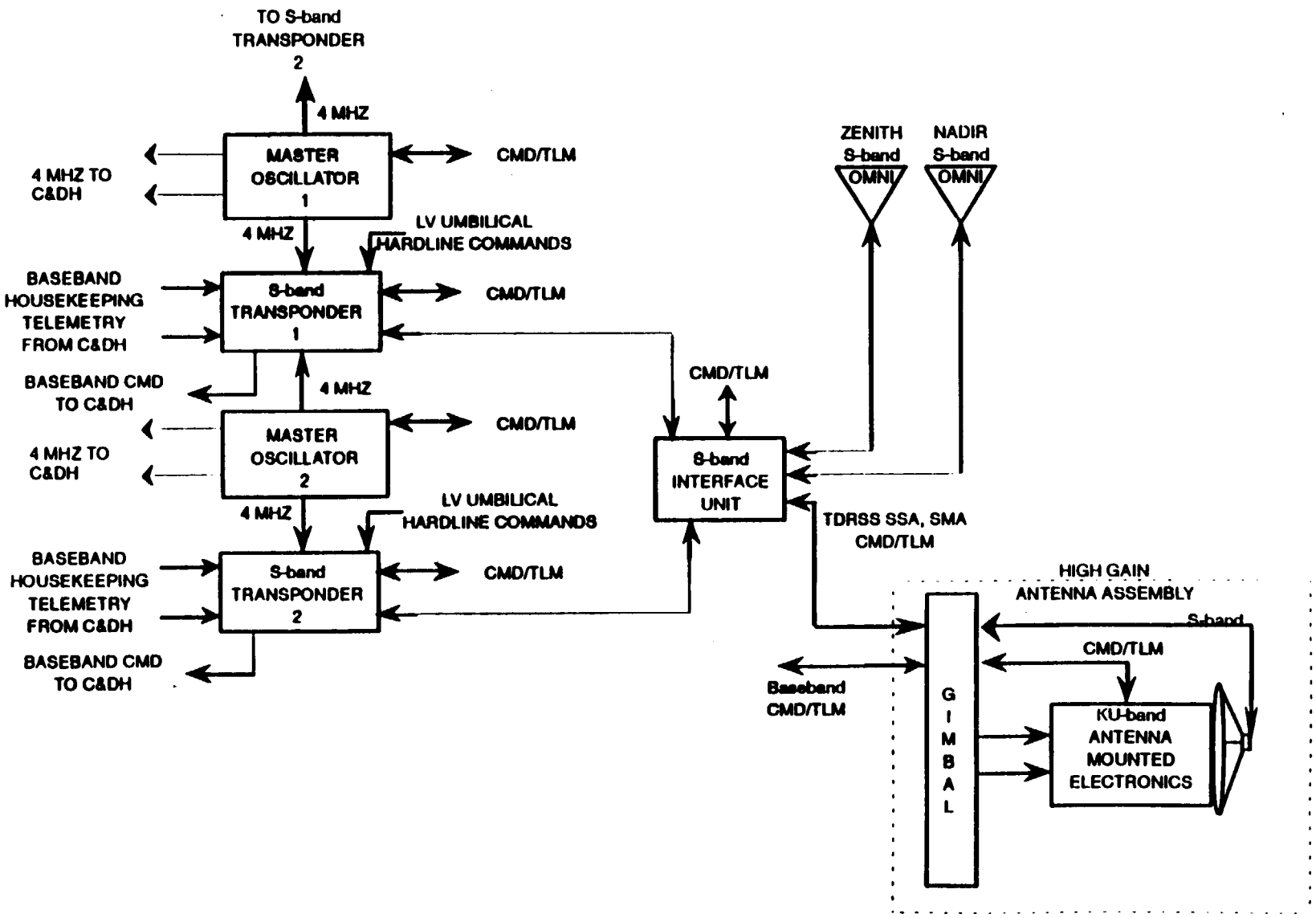

Faults, Effects, and Criticality

DAS Subsystem

Item	Failure	Effects	Time Criticality	Remarks
Modulator/Freq source	modulated output	loss of DAS output	low	externally redundant
	LO reference output	loss of DAS output	low	externally redundant
Upconverter	output	loss of DAS output	low	externally redundant
SSPA	output	loss of DAS output	low	externally redundant
Prime power	overvoltage	SSPA degradation	low	externally redundant
Output RF Switch	won't switch, stuck mid-point	loss of DAS output	low	2 failure scenario

- No autonomous response required

DAS Subsystem

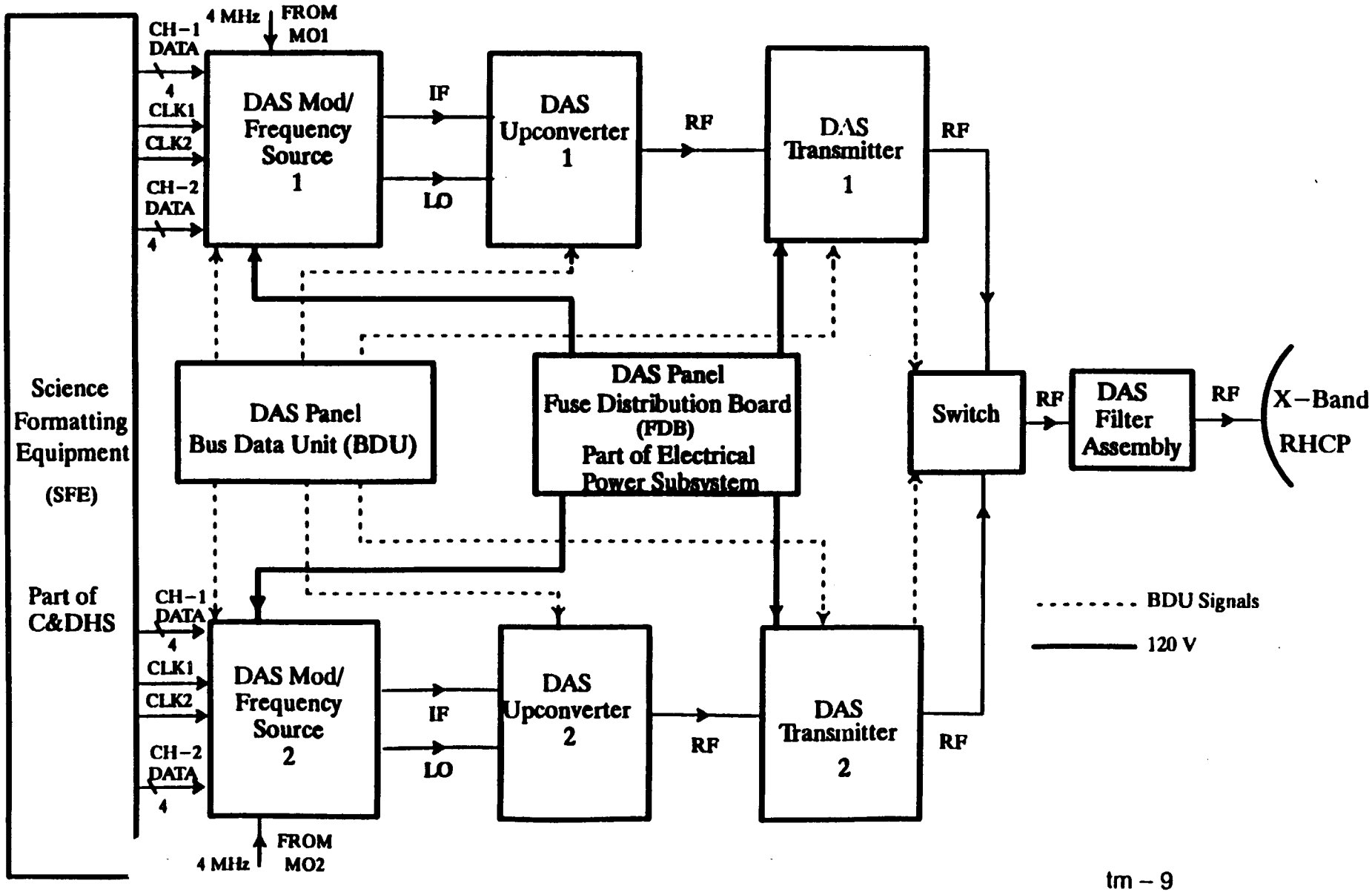

Faults, Effects, and Criticality

KSA Subsystem

Item	Failure	Effects	Time Criticality	Remarks
Modulator	modulated output	loss of K band link	low	externally redundant
	LO reference output	loss of K band link	low	externally redundant
HGA	encoder	indicated pointing mistracks command input (actual pointing maintained)	low	Encoder TLM for pointing FDIR
	ACON – improper command execution	HGA mispointed – loss of KSA data	low	Encoder TLM for pointing FDIR
		potential encroachment on RF stay out zone (radiate EM's and sun sensors)	medium	Encoder TLM for pointing FDIR
		potential motor drive damage if proceed to mechanical stop on pointing	medium	Encoder TLM for pointing FDIR
	upconverter/TWTA	loss of KSA output	low	internally redundant
	gimbal	no HGA pointing – loss of KSA data	low	DAS backup
GN&C	bad command input to HGA	potential encroachment on RF stay out zone (radiate EM's and sun sensors)	medium	Encoder TLM for pointing FDIR
		potential motor drive damage if proceed to mechanical stop on pointing	medium	Encoder TLM for pointing FDIR

KSA Subsystem

- HGA software stops preclude damage from hardware stops independent of GN&C

- HGA provides telemetry to support GN&C HGA management SW – if motion indicated by encoder inconsistent with command
  - Halt commanding to HGA
  - Turn off RF drive to HGA if transmitting to ensure RF stayout zone preserved

- HGA provides telemetry to support HGA thermal FDIR TMON to protect against overheating/damage
  - Az & El Gimbal temperatures

Communication Subsystem FDIR Summary

- Command reception via SBT guaranteed by passive receive on OMNI's and HGA, hot standby low rate SBT, and hot backup internal TCXO
- Command transfer from SBT to CTIU guaranteed by cross strapping and CTIU synch validation
- HGA software stops preclude damage from hardware stops independent of GN&C
- HGA provides telemetry to support GN&C HGA management SW which halts commanding to HGA and ensures no RF transmission if motion indicated by encoder inconsistent with command
- HGA provides telemetry to support HGA thermal FDIR TMON to protect against overheating/damage

KSA Subsystem

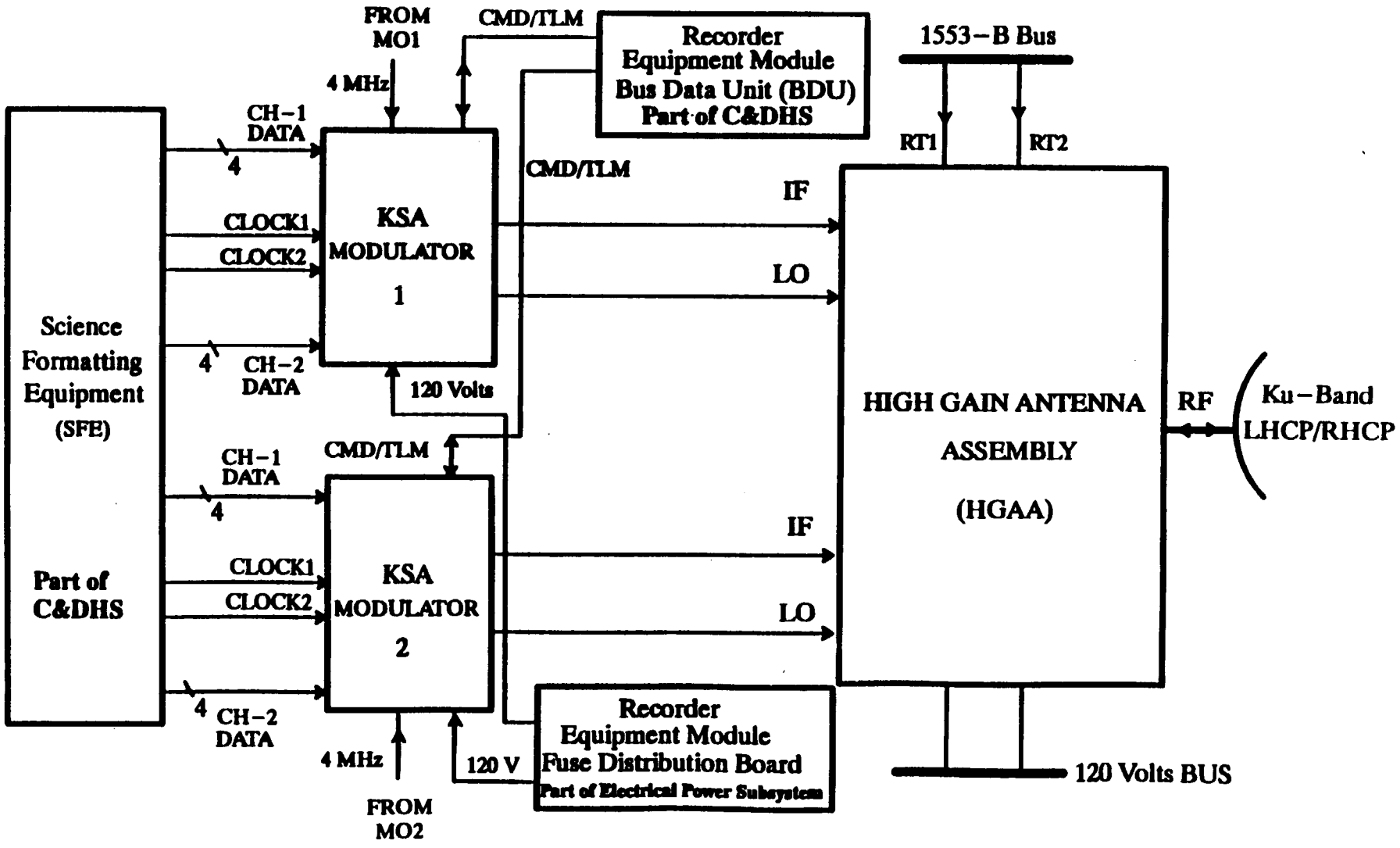

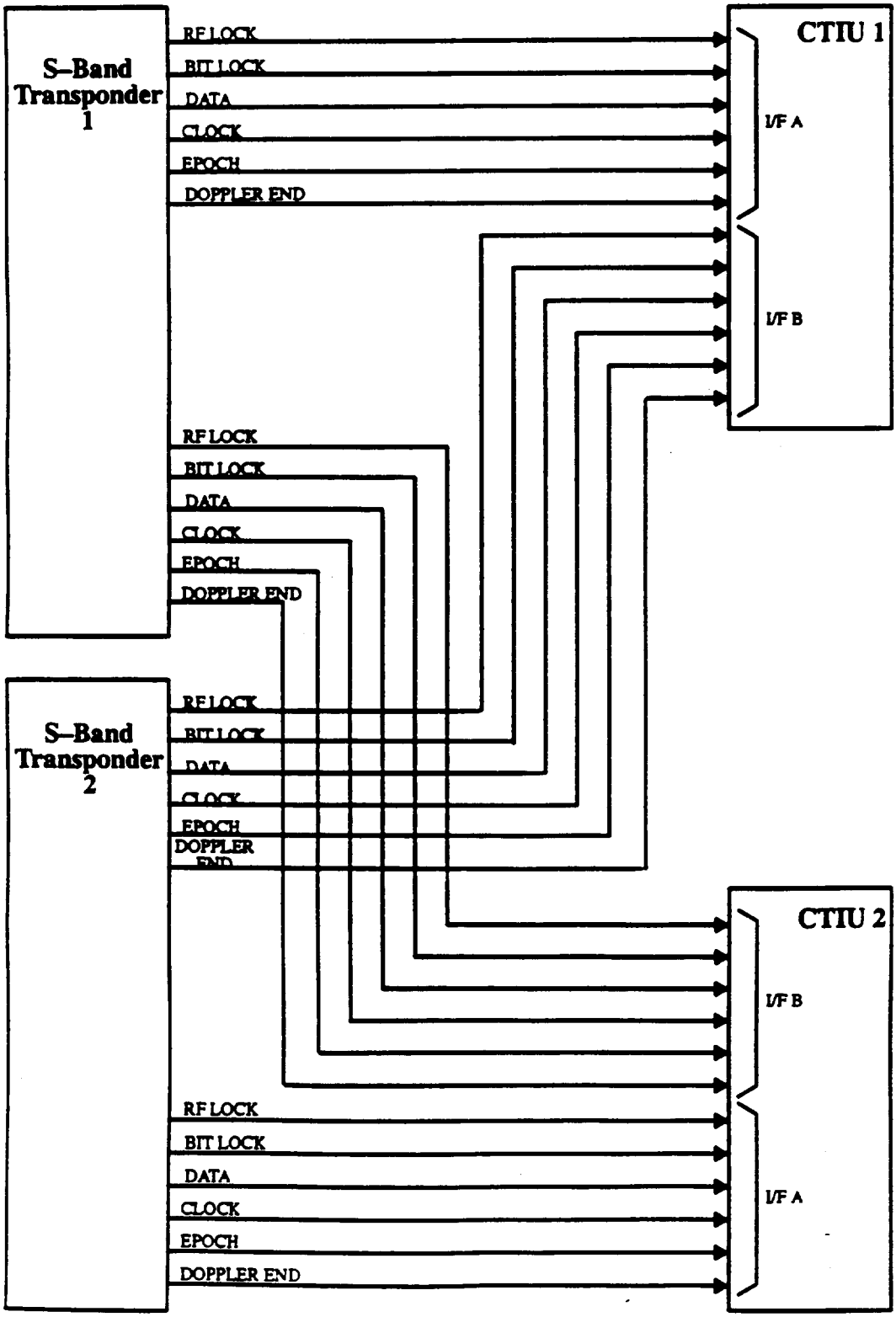

S–band Transponder to CTIU Interface

MARTIN MARIETTA
ASTRO-SPACE

EOS-DN-C&DH-039A

DESIGN NOTE

TITLE: Analysis of Command and Telemetry Bus Electrical Implementation

AUTHOR: William D. Henn

AUTHOR'S MANAGER: Michael A. Koza **DATE** 8/24/93

SE&I MANAGER: **DATE**

CHIEF ENGINEER: D. Lowery **DATE** 8/25/93

REVISIONS

LETTER	DESCRIPTION	DATE	AUTHOR
–	Initial Release	8/11/92	W. D. Henn
A	Updated to reflect new coupler quantity, positions and stub lengths	8/10/93	W. D. Henn

MARTIN MARIETTA
ASTRO–SPACE

DESIGN NOTE SUMMARY

DN#: EOS–C&DH–039A **Revision:** A **Date:** 8/11/92
Title: Analysis of Command and Telemetry Bus Electrical Implementation
Author: William D. Henn **Source ID (ESTA, PD, Memo, etc.):**

Purpose/Questions to be Answered:

Analyze the current Command and Telemetry Bus design, with revised parameters, to determine if the signal levels at the inputs to the various Bus Terminals continue to satisfy the requirements of MIL-STD-1553B. Based on the analysis, recommend specific changes to the current bus design to ensure compliance with MIL-STD-1553B.

Summary/Answers:

Based on the revised bus coupler quantity, position, and user stub lengths, the received voltage levels at the user terminal inputs were computed and found to continue to satisfy the minimum voltage level specified in MIL-STD-1553B. The effects of reflections on signal qualtiy were also analyzed through the use of a computer simulation program and were found to have negligible effect on the bus signal waveforms.

Recommendations: (Be Specific)	Accepted	Rejected	Baselined	Date
Update this analysis as the bus parameters continue to be refined.				

Open Items/Action Required	Responsible Person	Due Date

Comments

Form Completed By W. D. Henn **Date** 8/10/93 **Page** 1 **of** ____

TABLE OF CONTENTS

SECTION / PARAGRAPH	TITLE	PAGE
1	SCOPE	1
2	APPLICABLE DOCUMENTS	2
3	REQUIREMENTS	3
3.1	Definition	3
3.1.1	Command and Telemetry Bus Description	3
3.1.2	MIL-STD-1553B Requirements	4
3.1.3	Bus Interfaces	6
3.2	Factors Affecting Bus Performance	6
3.2.1	Stub Length	8
4	PROPOSED DESIGN	8
4.1	Bus Configuration	8
4.1.1	Bus Coupler Design	10
4.1.2	User Terminals	10
4.2	Design Analysis	11
4.2.1	Received Voltage Levels	11
4.2.2	Signal Reflections	11
4.2.3	Transmit Voltage Level	14
4.3	Analysis Results	14
4.3.1	Received Signal Levels	14
4.3.2	Signal Reflections	14
4.3.3	Signal-to-Noise Performance	19
5	SUMMARY	19
6	RECOMMENDATION	19

APPENDIX I

10 SIMULATED BUS SIGNAL WAVEFORMS 20
10.1 Bus Waveform At CTIU 1, No User Fault 21
10.2 Bus Waveform At SCC–1, No User Fault 22
10.3 Bus Waveform At COM BDU-A, No User Fault 23
10.4 Bus Waveform At SENS BDU–B, No User Fault 24
10.5 Bus Waveform At PWR BDU–A, No User Fault 25
10.6 Bus Waveform At DAS BDU–B, No User Fault 26
10.7 Bus Waveform At CTIU-2, SCC–1 Shorted 27
10.8 Bus Waveform At CTIU-2, DAS BDU-B Shorted 28

LIST OF TABLES

TABLE	TITLE	PAGE
Table I.	Coupler Locations and Stub Lengths	9
Table II.	Received Voltage Levels - Minimum Drive Voltage and One Fault	15
Table III.	Received Voltage Levels - Minimum Drive Voltage and No Fault	16
Table IV.	Received Voltage Levels - Maximum Drive Voltage and One Fault	17
Table V.	Received Voltage Levels - Maximum Drive Voltage and No Fault	18

LIST OF FIGURES

FIGURE	TITLE	PAGE
Figure 1.	Command and Telemetry Bus Architecture	5
Figure 2.	Transformer Coupled Stub	7
Figure 3.	Bus Equivalent Circuit	12
Figure 4.	Coupler & Stub Equivalent Circuit	13

1 SCOPE

This design note updates the previous analysis through a review and analysis of the current Command and Telemetry Bus design concept for the Command and Data Handling Subsystem of the EOS Spacecraft to ensure complete compliance with MIL-STD-1553B.

2 APPLICABLE DOCUMENTS

PS20008567	Command and Data Handling Subsystem Specification
PN20005869	Electromagnetic Compatibility (EMC) Control Plan for the EOS-AM Spacecraft
MIL-STD-1553B 21 September 1978 NOTICE 2 8 September 1986	Digital Time Division Command/Response Multiplex Data Bus

3 REQUIREMENTS

3.1 Definition

3.1.1 Command and Telemetry Bus Description

The Command and Telemetry (C&T) Bus is a dual-redundant data network, with each network designed as a MIL-STD-1553B (1553B) data bus. The network is utilized to distribute operational commands and information to the EOS Spacecraft Subsystem Components and Science Instruments, either directly or via the Bus Data Units (BDUs). The network also collects status information from these users, which are located throughout the Spacecraft. A Bus Controller (BC) is located in each of the Command and Telemetry Interface Units (CTIU-1 and 2) and directs all of the data transmissions on the bus. Within each CTIU, the resident BC is cross-strapped to each bus through a separate Transceiver and coupler. This arrangement permits either CTIU to command either the Primary or Secondary C&T Bus.

As a 1553B bus, the network uses all of the standard 1553B components such as bus couplers, controllers, remote terminals, bus cable, terminations, terminal transformers, etc.

The bus must serve the following users for a total of 35 interfaces:

Spacecraft Control Computer 2 (SCC-2)

Command and Telemetry Interface Unit 2 (CTIU-2)

Spacecraft Control Computer 1 (SCC-1)

Command and Telemetry Interface Unit 1 (CTIU-1)

Communications/Command and Data Handling (COMS) EM BDU-B

Communications/Command and Data Handling (COMS) EM BDU-A

MODIS BDU-B

MODIS BDU-A

MODIS-A

GN&C Star Tracker-B

Guidance, Navigation and Control (GN&C) BDU-B

GN&C Star Tracker-A

Guidance, Navigation and Control (GN&C) BDU-A

High-Gain Antenna B (HGA-B)

High-Gain Antenna A (HGA-A)

Recorder Equipment Module (REM) BDU-B

Recorder Equipment Module (REM) BDU-A

Reaction Wheel Assembly (RWA) EM BDU-B

Reaction Wheel Assembly (RWA) EM BDU-A

Power EM BDU–B

Power EM BDU-A

Propulsion Module BDU–B

Propulsion Module BDU–A

ASTER BDU-B

ASTER BDU-A

ASTER CSP-A

CERES/MISR/MOPITT BDU-B

CERES/MISR/MOPITT BDU-A

MISR-A

MOPITT-A

CERES (FWD)

Direct Access System (DAS) Panel BDU-B

CERES (AFT)

Direct Access System (DAS) Panel BDU-A

TEST PORT

The physical bus architecture is shown in Figure 1.

3.1.2 MIL-STD-1553B Requirements

Since the proposed implementation of the Command and Telemetry Bus utilizes only components (terminals, couplers and cable) which meet 1553B specifications, this report will analyze the characteristics of only the physical implementation of the proposed Command and Telemetry Bus relative to the performance requirements of 1553B. Therefore, the reader is referred to 1553B for information regarding signal rise-time, transceiver design, etc.

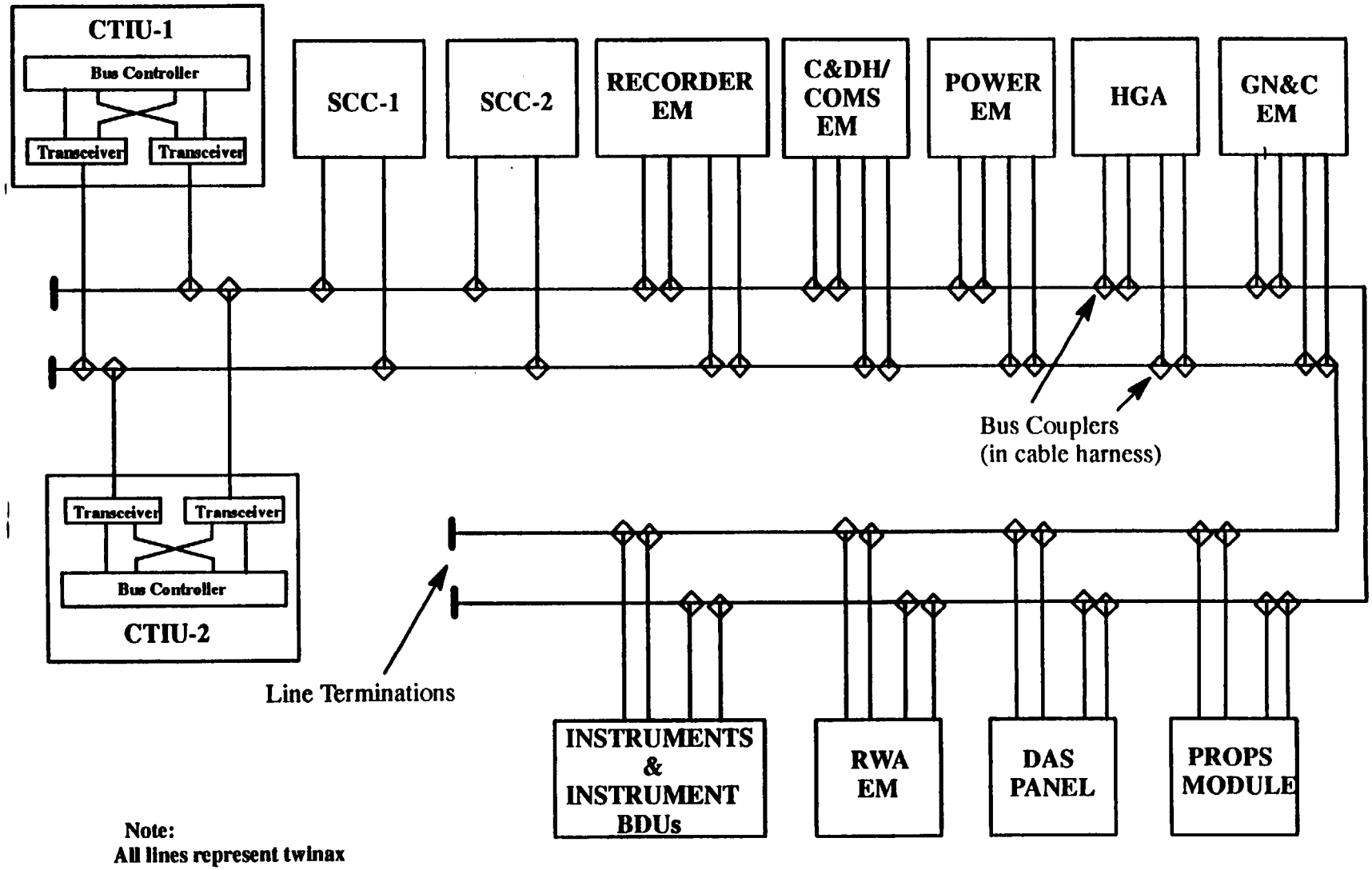

Note:
All lines represent twinax

Figure 1. Command and Telemetry Bus Architecture

For the purpose of this report, the following 1553B requirements apply, with one fault on the bus:

V_{xmit} (signal level at terminal output) = 18 Volts peak-to-peak, minimum

V_{rcv} (signal level at terminal input) = 1.00 Volt peak-to-peak, minimum

Z_I (receive terminal input impedance) = 1000 Ohms, minimum

Z_0 (bus cable characteristic impedance) = 77 Ohms

N_s:N_p (bus transformer turns ratio) = 1.414:1

R_{iso} (isolation resistor value) = $0.75Z_0$ = 57.75 Ohms

R_{fault} (shorted coupler impedance) = $1.5Z_0$ = 115.5 Ohms, minimum

α_c (cable attenuation) = 1.4 dB/100 ft, maximum

3.1.3 Bus Interfaces

The stubs for the proposed bus vary in length from 0.83 ft to 20.39 ft, as shown in Table I. All of the bus interfaces consist of a transformer-resistor coupling network as shown in Figure 2. This is prescribed by the 1553B specification and is necessary to minimize stub fault effects on the bus. In 1553B terminology, the users are referred to as "terminals" and consist of the bus interface circuitry (transceiver) connected to the stub via a transformer with a 2:1 turns ratio, the lower turns side being connected to the stub. All bus terminal (user) voltage measurements are referenced to this point of connection with the stub in accordance with 1553B requirements, rather than the actual point of connection with the transceiver.

3.2 Factors Affecting Bus Performance

There are two major factors involved in the design of the bus to ensure compliance with MIL-STD-1553B, namely, received signal amplitude and accuracy of signal edges. The signal amplitude is affected by stub length, terminating impedance, overall bus length and cable attenuation. The signal edge accuracy is affected by reflections caused by the bus couplers. These reflections occur because the couplers do not present a matched impedance to the bus and therefore cause a portion of the incident energy to be reflected back to the source. The magnitude of the reflection from a particular coupler increases as the length of the stub associated with that coupler increases. In general, the effect these reflections have on the received wave is dependent on both the length of the stubs and their position on the bus. Additional distortion of a lesser amount, is caused by dispersion and attenuation of the signals as they propagate along the bus. Dispersion, however, will not have a significant effect on pulse rise and fall times in bus networks which are less than 200 feet long.

Reflected waves on a bus cable begin to cause significant waveform distortion when their time of arrival at a point on the bus is delayed by more than the rise time of the original transmitted wave. Since the propagation delay of a bus cable is about 1.5 nanoseconds per foot, the reflection from a

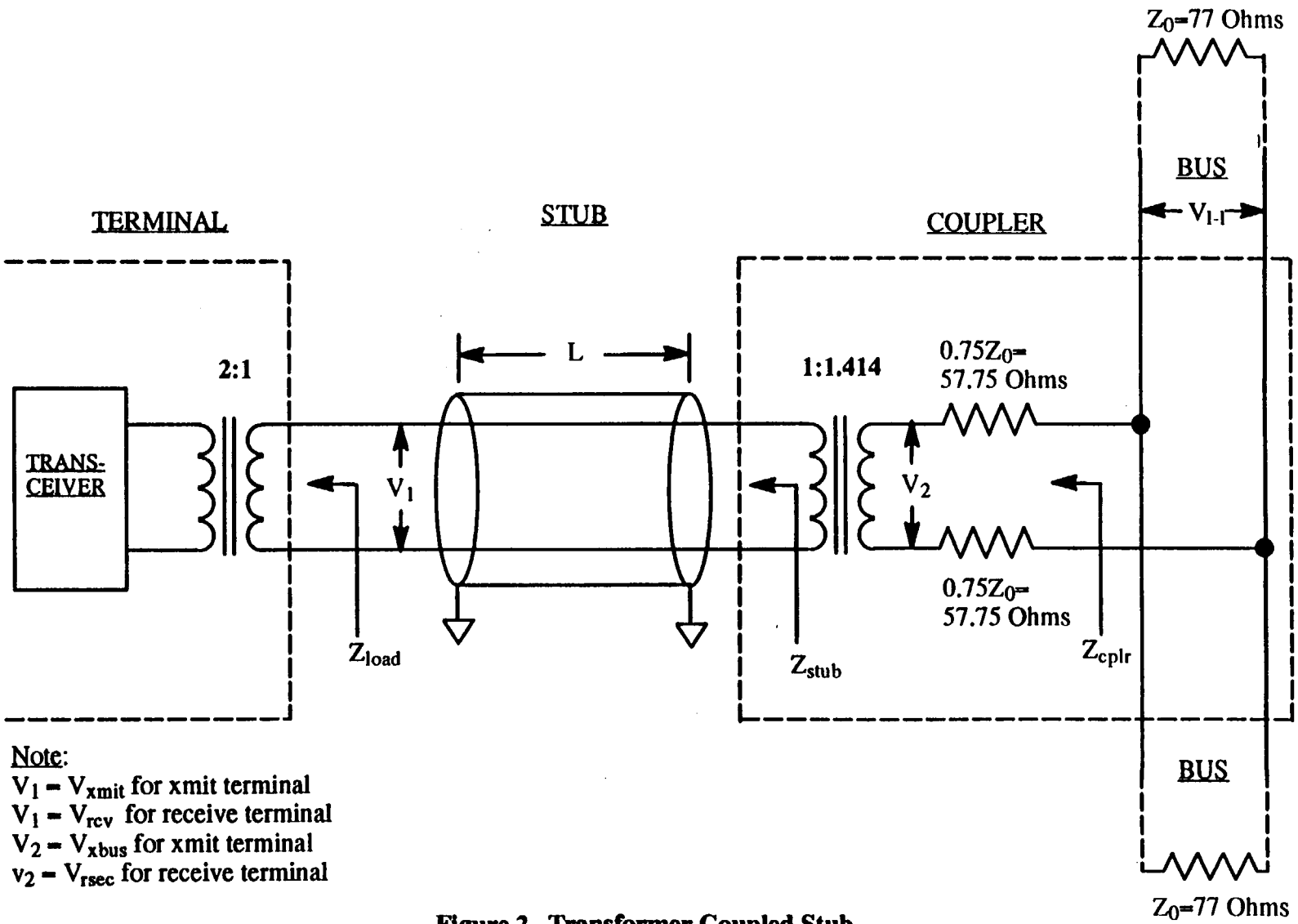

Note:
$V_1 = V_{xmit}$ for xmit terminal
$V_1 = V_{rcv}$ for receive terminal
$V_2 = V_{xbus}$ for xmit terminal
$v_2 = V_{rsec}$ for receive terminal

Figure 2. Transformer Coupled Stub

point 33 feet distant from the measurement point, will be delayed 100 nanoseconds from the original transmitted wave. As predicted by transmission-line theory. the wave reflections will cause changes in the shape of wave tops but will cause very little shift of zero-crossing times except at the end of a message. Distortion shows on the wave tops because reflections add to the much larger incident wave which switches rapidly between the maximum positive and negative levels. Waveform distortion is very evident at the end of a message where the incident wave has dropped to zero and reflected waves continue to arrive. The length of the distortion pulse at the end of a message is directly proportional to the length of the bus cable between the larger reflection points and the measurement point. The amplitude of the distortion pulse is determined primarily by the magnitude of the mismatch between the couplers and the bus. This mismatch is quantified through the calculation of a reflection coefficient for each coupler.

3.2.1 Stub Length

Although the minimum impedance presented to the stub by a terminal in the receive mode is limited to 1000 Ohms by the 1553B specification, the actual impedance presented to the bus transformer, and therefore the bus, is a complex transformation of that impedance which is, in turn, a function of the stub length. The transformation is given by the following formula:

$$Z_{stub} = Z_0 [Z_l \cos \beta\ell + j Z_0 \sin \beta\ell] / [Z_0 \cos \beta\ell + j Z_l \sin \beta\ell]$$

Where,

Z_0 = cable characteristic impedance

Z_l = termination impedance

$\beta = 2\pi / \lambda$

λ = wavelength of 1 MHz signal on stub (656.2 ft for a 67% velocity factor)

ℓ = physical length of stub

4 PROPOSED DESIGN

4.1 Bus Configuration

The proposed system is dual-redundant, however this report will only be concerned with the analysis of one bus since its mate has the same or similar physical layout as per information from the Electrical Accommodations Sub-Systems Engineering group. This Bus uses a 77 Ohm, doubly-terminated, twisted shielded pair as the interconnecting cable with couplers consisting of a resistively-isolated transformer. Table I lists the couplers by name and shows their location on the bus relative to the CTIU-1 coupler, together with the associated stub lengths. The location of the CTIU-1 coupler has been chosen as the primary reference point for coupler locations since it, or CTIU-2, is the Bus Controller.

Table I. Coupler Locations and Stub Lengths

Coupler ID	Coupler Name	Bus Location* (ft)	Stub Length (ft)
1	TEST PORT	28.58	0.83
2D**	DAS BDU-A	24.41	9.58
2D**	CERES (AFT)	24.41	11.85
3D**	DAS BDU(B)	23.74	10.24
3D**	CERES (FWD)	23.74	15.27
4	MOPITT-A	23.08	7.93
5	MISR-A	22.41	10.87
6	CERES/MISR/MOPITT BDU-A	21.7	3.63
7	CERES/MISR/MOPITT BDU-B	21.03	4.29
8	ASTER CSP-A	20.37	19.17
9	ASTER BDU-A	19.7	16.74
10	ASTER BDU-B	19.03	17.41
11	PMA BDU-A	18.37	14.67
12	PMA BDU-B	17.58	15.33
13	RWA BDU-A	16.91	14.18
14	RWA BDU-B	16.24	14.86
15	PWR BDU-A	15.58	11.63
16	PWR BDU-B	14.91	12.29
17	REC BDU-A	14.24	14.02
18	REC BDU-B	13.58	14.68
19	HIGH-GAIN ANTENNA-A	12.91	19.73
20	HIGH-GAIN ANTENNA-B	12.24	20.39
21D**	SENS BDU-A	11.58	16.26
21D**	STAR TRACKER-A	11.58	16.26
22D**	SENS BDU-B	10.91	17.36
22D**	STAR TRACKER-B	10.91	17.36

* Bus locations relative to CTIU-1
** Dual Coupler

Table I (cont'd). Coupler Locations and Stub Lengths

Coupler ID	Coupler Name	Bus Location* (ft)	Stub Length (ft)
23	MODIS-A	9.91	19.57
24	MODIS BDU-A	8.83	18.29
25	MODIS BDU-B	8.16	18.96
30	COM BDU-A	7.28	1.42
31	COM BDU-B	0.67	.96
32	CTIU-1	0.0	2.49
33	SCC−1	−2.58	2.9
34	CTIU-2	−1.13	2.6
35	SCC−2	−3.64	2.53

4.1.1 Bus Coupler Design

The proposed couplers are of standard 1553B design and consist of a transformer and isolation resistors connected across the bus as shown in Figure 2.

Under a no-fault situation, the coupler presents an impedance to the bus as shown in the following equation:

$$Z_{cplr} = [(N^2 Z_{stub})(Z_{toc}) / (N^2 Z_{stub} + Z_{toc})] + 1.5 R_{iso}$$

Where,

N = transformer turns ratio

Z_{stub} = stub load impedance transformed by stub length

R_{iso} = value of coupler isolation resistors

Z_{toc} = transformer open-circuit impedance

If the coupling transformer should become shorted, the minimum impedance presented to the bus is then equal to the value of the isolating resistors:

$$R_{fault} = 2 R_{iso} = 1.5 Z_0$$

4.1.2 User Terminals

Each user interfaces to the system by means of a terminal as shown in Figure 2. The terminal consists of a transformer-coupled transceiver which interfaces the user's digital circuitry to the 1553B data bus by providing the data encoding and line driving capability for transmitting and the line receiving,

data filtering and decoding functions for receiving. These terminals satisfy the 1553B specification, hence their characteristics are well known and will not need to be analyzed in detail with regard to their effect on system performance.

The minimum impedance presented to the stub by a terminal in the receive mode is:

$$Z_{rcvmin} = 1000 \text{ Ohms}$$

4.2 Design Analysis Methodology

4.2.1 Received Voltage Levels

In order to satisfy 1553B, the received voltage level (V_{rcv}) at the point of connection of the stub with the user terminal is specified to be a minimum of 1.0 V peak-to-peak with one user fault on the bus. This voltage is a function of the load presented to the stub by the terminal (R_l), the stub length (l), the value of the isolation resistors (R_{iso}), the bus transformer open-circuit impedance (Z_{oc}), the cable loss in the stub and on the bus, and the transmit terminal output voltage (V_{xmit}).

In order to make this computation in a straightforward manner, the calculation was split up into several parts for clarity of analysis. First, the total load placed on the bus by the bus cable terminations and all of the user couplers is determined. This impedance then forms a voltage divider with the isolation resistors of the transmitting coupler yielding the bus line-to-line voltage from the minimum transmit voltage level at the bus side of the coupling transformer. Once this is known, the individual user receive voltages can be computed from the voltage divider formed by the parallel combination of the open-circuit transformer and stub impedance and the receive coupler isolation resistance.

Figure 3 shows the electrical equivalent circuit of the bus. The input to the bus is at the left and is at the minimum specified input level of 18 V peak-to-peak multiplied by the coupler transformer turns ratio of 1.414, which yields a level of 23.30 V behind a total isolation resistance of $1.5Z_0$ Ohms. The bus cable is doubly-terminated and this is represented by the impedance of $Z_0/2$ in parallel with the bus. The next parallel impedance is R_{fault} which represents a fault impedance of $1.5Z_0$. This is the fault load specified by 1553B in the event of a shorted coupler transformer. The last parallel impedance, Z_{ct}, is the parallel combination of all of the user coupler loads.

Figure 4 is the equivalent circuit for an individual coupler and stub connected to a terminal in the receive mode. The bus sees an impedance Z_{cplr} which is the sum of the isolation resistance R_{iso} and the impedance formed by the parallel combination of the transformer open-circuit impedance and the stub impedance Z_{stub} multiplied by the transformer turns ratio squared (N^2).

Signal degradation due to cable loss is simply computed as a function of the distance between the transmitting and receiving couplers.

4.2.2 Signal Reflections

An analysis of the effect of signal reflections on the final data bit transition in a message was undertaken based on the location of the various couplers on the bus as determined by Electrical Accommodations S/S Engineering. This analysis was accomplished through the use of a computer

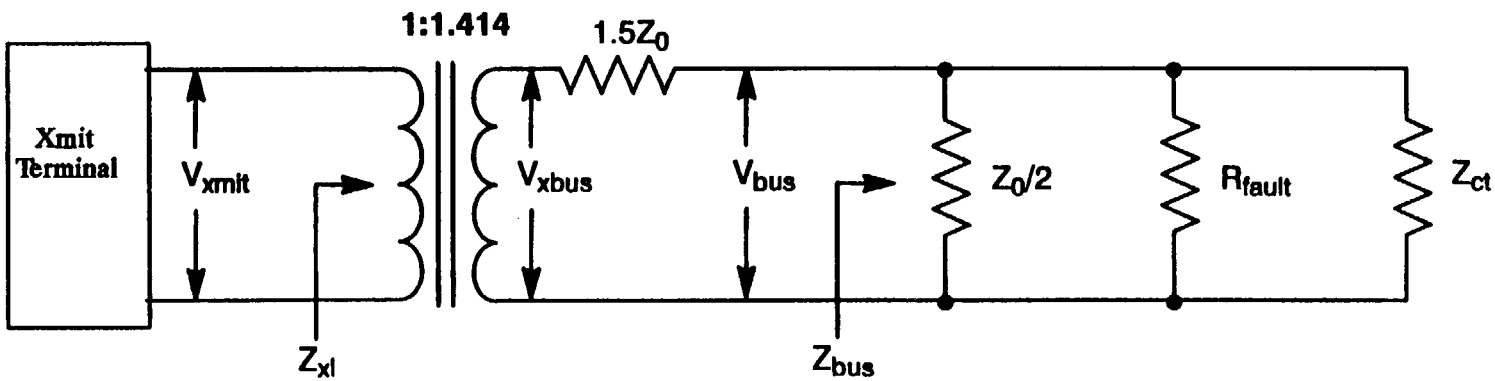

Note:
Z_{xl} = Total transmit terminal load
V_{xmit} = Min terminal output voltage into actual load
V_{xbus} = Min voltage at xmit xformer secondary
V_{bus} = Line-to-line bus voltage at xmit coupler
Z_{bus} = Total bus load as seen by xmit coupler
$Z_0/2$ = Value of double bus terminations
$R_{fault} = 1.5Z_0$
Z_{ct} = Total coupler load

Figure 3. Bus Equivalent Circuit

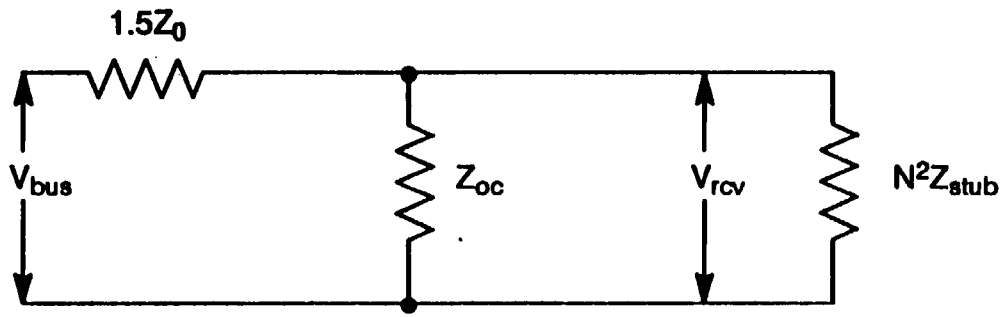

Note:
Z_{stub} = Value of receiver termination transformed by stub length
N = Transfromer turns ratio
Z_{oc} = Value of open-circuit transformer impedance
V_{bus} = Line-to-line bus voltage at receiving coupler location
V_{rcv} = Voltage level at input of receiving terminal

Figure 4. Coupler & Stub Equivalent Circuit

simulation program. Along with information on the coupler and data cable characteristics, other inputs to the program are the location of the couplers and their associated stub lengths and four programmable data bits which represent the final four bits of a message. The program computes the resulting waveform at any coupler location.

4.2.3 Transmit Voltage Level

The 1553B specification for minimum transmit terminal output voltage is 18 V peak-to-peak across 70 Ohms. This value of load impedance is what would be seen by a transmit terminal looking through a coupler into a bus using 70 Ohm cable with no other terminals on the bus. This is obviously not the real world, consequently, an allowance must be made for the decrease in load impedance due to the total number of couplers on the bus. Therefore, since the specification defines a minimum power level to be supplied to the bus load, the assumption is made that for small variations (<10%) in load, the amount of power the transmitter can supply to the load will remain constant.

4.3 Analysis Results

4.3.1 Received Signal Levels

All of the above computations were accomplished via a spread-sheet with the results listed in Tables II, III, IV and V.

The tables show the value of V_{rcv} for each of the 35 user terminals for each of four cases. The minimum received voltage occurs at the HGA–B terminal which is at the end of an 20.39 ft stub, 12.24 feet distant from the CTIU-1 transmitter.

For a system with one user fault and a transmitter which satisfies the 1553B specification for minimum output voltage of 18 V peak-to-peak into a 70 Ohm load, the minimum value of V_{rcv} is 1.25 V peak-to-peak, as shown in Table II.

For a system with no user faults and a minimum output transmitter (18 V p-p), the minimum value of V_{rcv} is 1.40 V peak-to-peak, as shown in Table III.

For a system with one user fault and a maximum output transmitter (27 V p-p), the minimum value of V_{rcv} is 1.87 V peak-to-peak, as shown in Table IV.

For a system with no user faults and a maximum output transmitter (27 V p-p), the minimum value of V_{rcv} is 2.11 V peak-to-peak, as shown in Table V.

The stub lengths range from 0.83 ft to 20.39 ft with corresponding coupler impedance magnitudes of 1680 and 641 Ohms, respectively. With one user fault, the magnitude of the total load ($|Z_{xl}|$) presented to the transmit terminal is 64.52 Ohms, which is only a 7.8% reduction from the 1553B specified loading of 70 Ohms. Therefore, the assumption that the transmit terminal could supply the same power to a reduced load impedance would seem to be reasonable.

4.3.2 Signal Reflections

The production of a distortion pulse at the end of a message due to signal reflections was investigated through the use of a computer simulation program. The program computes and displays the bus waveform at any chosen coupler location. Since the coupler locations have been refined by the

Table II. Received Voltage Levels - Minimum Drive Voltage and One Fault

Cable loss (dB/100 ft) = − 1.40 (1.5 dB/100 ft Max)
# of Faults = 1
Z0 (Ohms) = 77.00
Vxmin (V p-p) = 18.00 (Across 70 Ohm load by Spec)
Rfault (Ohms) = 115.50
Vxmit (V p-p) = 16.48 (At primary (xmtr) side of bus xformer - load < 70 Ohms)
Vxbus (V p-p) = 23.30 (At secondary (bus) side of bus xformer)
Ns:Np = 1.41 (Bus xformer turns ratio)
Riso (Ohms) = 57.75 (Bus isolation resistor value)
Min Vrcv (V p-p) = 1.25 (1.00 V p-p min with one fault)

Column Headings:
Vrsec = Voltage at bus side of receiver bus transformer
Vrcv = Voltage at receiver end of stub, attenuated by cable loss

Coupler ID#	Name	Bus Location (ft)	Stub length (ft)	|Zcplr| (Ohms)	|Ycplr| (Siemens)	Vrsec (Volts)	Vrcv (1V min)	Bus Cplr Load Zct (Ohms)	Total Bus Load Zct||Z0/2 (Ohms)	Vbus (Volts)	Xmtr Load |Zxl| (Ohms)
1	TEST PORT	28.58	.83	1,679.90	.0005953	2.09	1.48	25.51	13.54	2.34	64.522
2D	DAS BDU-A	24.41	9.58	1,013.93	.0009863	1.99	1.39			2.35	
2D	CERES (AFT)	24.41	11.85	906.77	.0011028	1.95	1.35			2.35	
3D	DAS BDU-B	23.74	10.24	980.33	.0010201	1.98	1.38			2.35	
3D	CERES (FWD)	23.74	15.27	779.47	.0012829	1.89	1.30			2.35	
4	MOPITT-A	23.08	7.93	1,105.57	.0009045	2.03	1.42			2.36	
5	MISR-A	22.41	10.87	950.54	.0010520	1.98	1.37			2.36	
6	CER/MSR/MP BDU-A	21.70	3.63	1,418.54	.0007050	2.10	1.47			2.36	
7	CER/MSR/MP BDU-B	21.03	4.29	1,362.54	.0007339	2.09	1.47			2.36	
8	ASTER CSP-A	20.37	19.17	669.60	.0014934	1.82	1.25			2.37	
9	ASTER BDU-A	19.70	16.74	734.19	.0013620	1.87	1.29			2.37	
10	ASTER BDU-B	19.03	17.41	715.30	.0013980	1.86	1.28			2.37	
11	PMA BDU-A	18.37	14.67	799.39	.0012510	1.92	1.32			2.37	
12	PMA BDU-B	17.58	15.33	777.31	.0012865	1.91	1.31			2.38	
13	PWR BDU-A	16.91	14.18	816.13	.0012253	1.93	1.33			2.38	
14	PWR BDU-B	16.24	14.86	792.93	.0012612	1.92	1.32			2.38	
15	RWA BDU-A	15.58	11.63	916.46	.0010912	1.98	1.38			2.38	
16	RWA BDU-B	14.91	12.29	888.25	.0011258	1.97	1.37			2.39	
17	REC BDU-A	14.24	14.02	822.05	.0012165	1.94	1.34			2.39	
18	REC BDU-B	13.58	14.68	798.83	.0012518	1.93	1.33			2.39	
19	HGA-A	12.91	19.73	656.22	.0015239	1.83	1.26			2.39	
20	HGA-B	12.24	20.39	640.89	.0015603	1.82	1.25			2.40	
21D	SENS BDU-A	11.58	16.26	748.48	.0013360	1.91	1.31			2.40	
21D	STAR TRACKER-A	11.58	16.26	748.48	.0013360	1.91	1.31			2.40	
22D	SENS BDU-B	10.91	17.36	716.69	.0013953	1.89	1.30			2.40	
22D	STAR TRACKER-B	10.91	17.36	716.69	.0013953	1.89	1.30			2.40	
23	MODIS-A	9.91	19.57	659.96	.0015152	1.85	1.27			2.41	
24	MODIS BDU-A	8.83	18.29	691.63	.0014459	1.87	1.29			2.41	
25	MODIS BDU-B	8.16	18.96	674.72	.0014821	1.86	1.28			2.41	
30	COM BDU-A	7.28	1.42	1,622.47	.0006163	2.16	1.53			2.42	
31	COM BDU-B	.67	.96	1,667.52	.0005997	2.19	1.55			2.44	
32	CTIU-1	.00	2.49	1,519.98	.0006579	2.18	1.54			2.45	
33	SCC-1	2.58	2.90	1,482.57	.0006745	2.17	1.53			2.44	
34	CTIU-2	1.13	2.60	1,509.96	.0006623	2.18	1.53			2.44	
35	SCC-2	3.64	2.53	1,516.89	.0006592	2.17	1.53			2.43	

Table III. Received Voltage Levels - Minimum Drive Voltage and No Fault

Cable loss (dB/100 ft) = 1.40 (1.5 dB/100 ft Max)
# of Faults = 0
Z0 (Ohms) = 77.00
Vxmin (V p-p) = 18.00 (Across 70 Ohm load by Spec)
Rfault (Ohms) =
Vxmit (V p-p) = 16.59 (At primary (xmtr) side of bus xformer - load < 70 Ohms)
Vxbus (V p-p) = 23.46 (At secondary (bus) side of bus xformer)
Ns:Np = 1.41 (Bus xformer turns ratio)
Riso (Ohms) = 57.75 (Bus isolation resistor value)
Min Vrcv (V p-p) = 1.40 (1.00 V p-p min with one fault)

Column Headings:
Vrsec = Voltage at bus side of receiver bus transformer
Vrcv = Voltage at receiver end of stub, attenuated by cable loss

Coupler ID#	Name	Bus Location (ft)	Stub length (ft)	|Zcplr| (Ohms)	|Ycplr| (Siemens)	Vrsec (Volts)	Vrcv (1V min)	Bus Cplr Load Zct (Ohms)	Total Bus Load Zct||Z0/2 (Ohms)	Vbus (Volts)	Xmtr Load |Zxl| (Ohms)
1	TEST PORT	28.58	.83	1,679.90	.0005953	2.35	1.66	25.51	15.34	2.63	65.421
2D	DAS BDU-A	24.41	9.58	1,013.93	.0009863	2.24	1.56			2.64	
2D	CERES (AFT)	24.41	11.85	906.77	.0011028	2.20	1.52			2.64	
3D	DAS BDU-B	23.74	10.24	980.33	.0010201	2.23	1.55			2.65	
3D	CERES (FWD)	23.74	15.27	779.47	.0012829	2.12	1.47			2.65	
4	MOPITT-A	23.08	7.93	1,105.57	.0009045	2.28	1.59			2.65	
5	MISR-A	22.41	10.87	950.54	.0010520	2.22	1.55			2.65	
6	CER/MSR/MP BDU-A	21.70	3.63	1,418.54	.0007050	2.36	1.66			2.66	
7	CER/MSR/MP BDU-B	21.03	4.29	1,362.54	.0007339	2.35	1.65			2.66	
8	ASTER CSP-A	20.37	19.17	669.60	.0014934	2.05	1.41			2.66	
9	ASTER BDU-A	19.70	16.74	734.19	.0013620	2.11	1.45			2.66	
10	ASTER BDU-B	19.03	17.41	715.30	.0013980	2.09	1.44			2.67	
11	PMA BDU-A	18.37	14.67	799.39	.0012510	2.16	1.49			2.67	
12	PMA BDU-B	17.58	15.33	777.31	.0012865	2.14	1.48			2.67	
13	PWR BDU-A	16.91	14.18	816.13	.0012253	2.17	1.50			2.68	
14	PWR BDU-B	16.24	14.86	792.93	.0012612	2.16	1.49			2.68	
15	RWA BDU-A	15.58	11.63	916.46	.0010912	2.23	1.55			2.68	
16	RWA BDU-B	14.91	12.29	888.25	.0011258	2.22	1.54			2.69	
17	REC BDU-A	14.24	14.02	822.05	.0012165	2.18	1.51			2.69	
18	REC BDU-B	13.58	14.68	798.83	.0012518	2.17	1.50			2.69	
19	HGA-A	12.91	19.73	656.22	.0015239	2.06	1.41			2.69	
20	HGA-B	12.24	20.39	640.89	.0015603	2.05	1.40			2.70	
21D	SENS BDU-A	11.58	16.26	748.48	.0013360	2.14	1.48			2.70	
21D	STAR TRACKER-A	11.58	16.26	748.48	.0013360	2.14	1.48			2.70	
22D	SENS BDU-B	10.91	17.36	716.69	.0013953	2.12	1.46			2.70	
22D	STAR TRACKER-B	10.91	17.36	716.69	.0013953	2.12	1.46			2.70	
23	MODIS-A	9.91	19.57	659.96	.0015152	2.08	1.42			2.71	
24	MODIS BDU-A	8.83	18.29	691.63	.0014459	2.11	1.45			2.71	
25	MODIS BDU-B	8.16	18.96	674.72	.0014821	2.10	1.44			2.71	
30	COM BDU-A	7.28	1.42	1,622.47	.0006163	2.43	1.72			2.72	
31	COM BDU-B	.67	.96	1,667.52	.0005997	2.46	1.74			2.75	
32	CTIU-1	.00	2.49	1,519.98	.0006579	2.45	1.73			2.75	
33	SCC-1	2.58	2.90	1,482.57	.0006745	2.44	1.72			2.74	
34	CTIU-2	1.13	2.60	1,509.96	.0006623	2.45	1.72			2.75	
35	SCC-2	3.64	2.53	1,516.89	.0006592	2.44	1.72			2.73	

Table IV. Received Voltage Levels - Maximum Drive Voltage and One Fault

Cable loss (dB/100 ft)	=	1.40	(1.5 dB/100 ft Max)
# of Faults	=	1	
Z0 (Ohms)	=	77.00	
Vxmin (V p-p)	=	27.00	(Across 70 Ohm load by Spec)
Rfault (Ohms)	=	115.50	
Vxmit (V p-p)	=	24.72	(At primary (xmtr) side of bus xformer - load < 70 Ohms)
Vxbus (V p-p)	=	34.95	(At secondary (bus) side of bus xformer)
Ns:Np	=	1.41	(Bus xformer turns ratio)
Riso (Ohms)	=	57.75	(Bus isolation resistor value)
Min Vrcv (V p-p)	=	1.87	(1.00 V p-p min with one fault)

Column Headings:
Vrsec = Voltage at bus side of receiver bus transformer
Vrcv = Voltage at receiver end of stub, attenuated by cable loss

Coupler ID#	Name	Bus Location (ft)	Stub length (ft)	|Zcplr| (Ohms)	|Ycplr| (Siemens)	Vrsec (Volts)	Vrcv (1V min)	Bus Cplr Load Zct (Ohms)	Total Bus Load Zct||Z0/2 (Ohms)	Vbus (Volts)	Xmtr Load |Zxl| (Ohms)
1	TEST PORT	28.58	.83	1,679.90	.0005953	3.14	2.22	25.51	13.54	3.50	64.522
2D	DAS BDU-A	24.41	9.58	1,013.93	.0009863	2.99	2.08			3.53	
2D	CERES (AFT)	24.41	11.85	906.77	.0011028	2.93	2.03			3.53	
3D	DAS BDU-B	23.74	10.24	980.33	.0010201	2.98	2.07			3.53	
3D	CERES (FWD)	23.74	15.27	779.47	.0012829	2.83	1.95			3.53	
4	MOPITT-A	23.08	7.93	1,105.57	.0009045	3.04	2.12			3.53	
5	MISR-A	22.41	10.87	950.54	.0010520	2.97	2.06			3.54	
6	CER/MSR/MP BDU-A	21.70	3.63	1,418.54	.0007050	3.14	2.21			3.54	
7	CER/MSR/MP BDU-B	21.03	4.29	1,362.54	.0007339	3.14	2.20			3.55	
8	ASTER CSP-A	20.37	19.17	669.60	.0014934	2.73	1.87			3.55	
9	ASTER BDU-A	19.70	16.74	734.19	.0013620	2.81	1.93			3.55	
10	ASTER BDU-B	19.03	17.41	715.30	.0013980	2.79	1.92			3.56	
11	PMA BDU-A	18.37	14.67	799.39	.0012510	2.87	1.98			3.56	
12	PMA BDU-B	17.58	15.33	777.31	.0012865	2.86	1.97			3.57	
13	PWR BDU-A	16.91	14.18	816.13	.0012253	2.89	2.00			3.57	
14	PWR BDU-B	16.24	14.86	792.93	.0012612	2.88	1.99			3.57	
15	RWA BDU-A	15.58	11.63	916.46	.0010912	2.98	2.07			3.58	
16	RWA BDU-B	14.91	12.29	888.25	.0011258	2.96	2.05			3.58	
17	REC BDU-A	14.24	14.02	822.05	.0012165	2.91	2.01			3.58	
18	REC BDU-B	13.58	14.68	798.83	.0012518	2.90	2.00			3.59	
19	HGA-A	12.91	19.73	656.22	.0015239	2.75	1.88			3.59	
20	HGA-B	12.24	20.39	640.89	.0015603	2.74	1.87			3.60	
21D	SENS BDU-A	11.58	16.26	748.48	.0013360	2.86	1.97			3.60	
21D	STAR TRACKER-A	11.58	16.26	748.48	.0013360	2.86	1.97			3.60	
22D	SENS BDU-B	10.91	17.36	716.69	.0013953	2.83	1.95			3.60	
22D	STAR TRACKER-B	10.91	17.36	716.69	.0013953	2.83	1.95			3.60	
23	MODIS-A	9.91	19.57	659.96	.0015152	2.77	1.90			3.61	
24	MODIS BDU-A	8.83	18.29	691.63	.0014459	2.81	1.93			3.62	
25	MODIS BDU-B	8.16	18.96	674.72	.0014821	2.79	1.92			3.62	
30	COM BDU-A	7.28	1.42	1,622.47	.0006163	3.24	2.29			3.63	
31	COM BDU-B	.67	.96	1,667.52	.0005997	3.28	2.32			3.66	
32	CTIU-1	.00	2.49	1,519.98	.0006579	3.27	2.31			3.67	
33	SCC-1	2.58	2.90	1,482.57	.0006745	3.25	2.29			3.65	
34	CTIU-2	1.13	2.60	1,509.96	.0006623	3.27	2.30			3.66	
35	SCC-2	3.64	2.53	1,516.89	.0006592	3.25	2.29			3.65	

Table V. Received Voltage Levels - Maximum Drive Voltage and No Fault

Cable loss (dB/100 ft) = − 1.40 (1.5 dB/100 ft Max)
# of Faults = 0
Z0 (Ohms) = 77.00
Vxmin (V p-p) = 27.00 (Across 70 Ohm load by Spec)
Rfault (Ohms) =
Vxmit (V p-p) = 24.89 (At primary (xmtr) side of bus xformer - load < 70 Ohms)
Vxbus (V p-p) = 35.19 (At secondary (bus) side of bus xformer)
Ns:Np = 1.41 (Bus xformer turns ratio)
Riso (Ohms) = 57.75 (Bus isolation resistor value)
Min Vrcv (V p-p) = 2.11 (1.00 V p-p min with one fault)

Column Headings:
Vrsec = Voltage at bus side of receiver bus transformer
Vrcv = Voltage at receiver end of stub, attenuated by cable loss

Coupler ID#	Name	Bus Location (ft)	Stub length (ft)	|Zcplr| (Ohms)	|Ycplr| (Siemens)	Vrsec (Volts)	Vrcv (1V min)	Bus Cplr Load Zct (Ohms)	Total Bus Load Zct||Z0/2 (Ohms)	Vbus (Volts)	Xmtr Load |Zxl| (Ohms)
1	TEST PORT	28.58	.83	1,679.90	.0005953	3.53	2.49	25.51	15.34	3.94	65.421
2D	DAS BDU-A	24.41	9.58	1,013.93	.0009863	3.37	2.34			3.97	
2D	CERES (AFT)	24.41	11.85	906.77	.0011028	3.29	2.29			3.97	
3D	DAS BDU-B	23.74	10.24	980.33	.0010201	3.35	2.33			3.97	
3D	CERES (FWD)	23.74	15.27	779.47	.0012829	3.19	2.20			3.97	
4	MOPITT-A	23.08	7.93	1,105.57	.0009045	3.42	2.39			3.98	
5	MISR-A	22.41	10.87	950.54	.0010520	3.34	2.32			3.98	
6	CER/MSR/MP BDU-A	21.70	3.63	1,418.54	.0007050	3.54	2.49			3.98	
7	CER/MSR/MP BDU-B	21.03	4.29	1,362.54	.0007339	3.53	2.48			3.99	
8	ASTER CSP-A	20.37	19.17	669.60	.0014934	3.08	2.11			3.99	
9	ASTER BDU-A	19.70	16.74	734.19	.0013620	3.16	2.17			4.00	
10	ASTER BDU-B	19.03	17.41	715.30	.0013980	3.14	2.16			4.00	
11	PMA BDU-A	18.37	14.67	799.39	.0012510	3.23	2.23			4.01	
12	PMA BDU-B	17.58	15.33	777.31	.0012865	3.22	2.22			4.01	
13	PWR BDU-A	16.91	14.18	816.13	.0012253	3.26	2.25			4.02	
14	PWR BDU-B	16.24	14.86	792.93	.0012612	3.24	2.24			4.02	
15	RWA BDU-A	15.58	11.63	916.46	.0010912	3.35	2.32			4.02	
16	RWA BDU-B	14.91	12.29	888.25	.0011258	3.33	2.31			4.03	
17	REC BDU-A	14.24	14.02	822.05	.0012165	3.28	2.27			4.03	
18	REC BDU-B	13.58	14.68	798.83	.0012518	3.26	2.25			4.04	
19	HGA-A	12.91	19.73	656.22	.0015239	3.10	2.12			4.04	
20	HGA-B	12.24	20.39	640.89	.0015603	3.08	2.11			4.05	
21D	SENS BDU-A	11.58	16.26	748.48	.0013360	3.22	2.22			4.05	
21D	STAR TRACKER-A	11.58	16.26	748.48	.0013360	3.22	2.22			4.05	
22D	SENS BDU-B	10.91	17.36	716.69	.0013953	3.18	2.19			4.05	
22D	STAR TRACKER-B	10.91	17.36	716.69	.0013953	3.18	2.19			4.05	
23	MODIS-A	9.91	19.57	659.96	.0015152	3.12	2.13			4.06	
24	MODIS BDU-A	8.83	18.29	691.63	.0014459	3.16	2.17			4.07	
25	MODIS BDU-B	8.16	18.96	674.72	.0014821	3.14	2.16			4.07	
30	COM BDU-A	7.28	1.42	1,622.47	.0006163	3.65	2.58			4.08	
31	COM BDU-B	.67	.96	1,667.52	.0005997	3.69	2.61			4.12	
32	CTIU-1	.00	2.49	1,519.98	.0006579	3.68	2.59			4.13	
33	SCC-1	2.58	2.90	1,482.57	.0006745	3.66	2.58			4.11	
34	CTIU-2	1.13	2.60	1,509.96	.0006623	3.67	2.59			4.12	
35	SCC-2	3.64	2.53	1,516.89	.0006592	3.66	2.58			4.10	

Electrical Accommodations S/S Engineering Group, several locations were chosen for analysis to ascertain the quality of the signal waveform along the entire length of the bus. Under no-fault conditions, points-of-view were selected at the couplers for CTIU-1, SCC-1, COM BDU-A, SENS BDU-B, PWR BDU-A and DAS BDU-B. For a single-fault condition, the waveform was viewed at CTIU–2 with SCC–1 shorted. The short was then moved to the DAS BDU-A position. The first viewpoint was chosen to maximally attenuate the bus signal by a fault adjacent to the transmitter, and the second was chosen to produce the maximum amount of delay for the reflected signal from the viewing point. The computed bus signals are shown in Appendix I.

The simulations for each of the cases described above showed no significant production of a distortion pulse at the end of the simulated message.

4.3.3 Signal-to-Noise Performance

The system will satisfy the noise rejection specification of 1553B if it exhibits a maximum word error rate of one part in 10^7, on all words received by any user terminal, after validation checks, when operating in the presence of additive white Gaussian noise distributed over a bandwidth of 1.0 kHz to 4.0 MHz at an RMS amplitude of 140 mV. A word error includes any fault which is measured with a 2.1 V peak-to-peak, line-to-line, input to the terminal as measured at the connection point of the terminal to the stub.

Although the minimum received voltage level as determined by analysis is only 1.25 V peak-to-peak, the injected noise due to EMI fields generated by the Spacecraft is expected to fall far below the 140 mV RMS level due to the stringent requirements on maintaining a low level of EMI as specified in Electromagnetic Compatibility Control Plan, PN20005869. The resulting signal-to-noise ratio should compare favorably with the 1553B test level.

5 SUMMARY

This update of the previous analysis reflects the addition of 6 couplers and a refinement of their position on the bus and user stub lengths. After reviewing the purpose of the Command and Telemetry Bus and a brief discussion of the pertinent parts of the 1553B specification, a detailed re-analysis was made of the signal amplitude characteristics and waveform distortion of the proposed Command and Telemetry Bus. Based on the revised number of couplers, their positions and stub lengths, the proposed system still satisfies the received voltage specification of MIL-STD-1553B. A detailed analysis of the effect of system reflections on signal quality also shows no significant degradation of the bus signal waveform.

6 RECOMMENDATION

This analysis, which is based on information which has been revised since the previous one, shows that the proposed Command and Telemetry Bus continues to satisfy the voltage criteria of 1553B, and a detailed investigation into the effect of signal reflections shows negligible effect. The recommendation is to continue to update this analysis until the coupler positions and stub lengths are finalized.

APPENDIX I

10 SIMULATED BUS SIGNAL WAVEFORMS

All of the following waveforms are simulations of the last four bits of a message sent from CTIU 1, as seen at the bus locations indicated. The bit pattern is 1111, representing the last four bits in the message. This Manchester-encoded pattern was transmitted with a rise time of 200 ns. The distortion created by bus reflections is seen as an excursion of the rising edge of the final data bit above the zero-voltage axis. If the distortion is present in sufficient amplitude to exceed the receiver threshold, it could be interpreted as an additional bit in the message, thus creating an error. None of the waveforms exhibit more than a negligible amount of this distortion.

10.1 Bus Waveform At CTIU 1, No User Fault

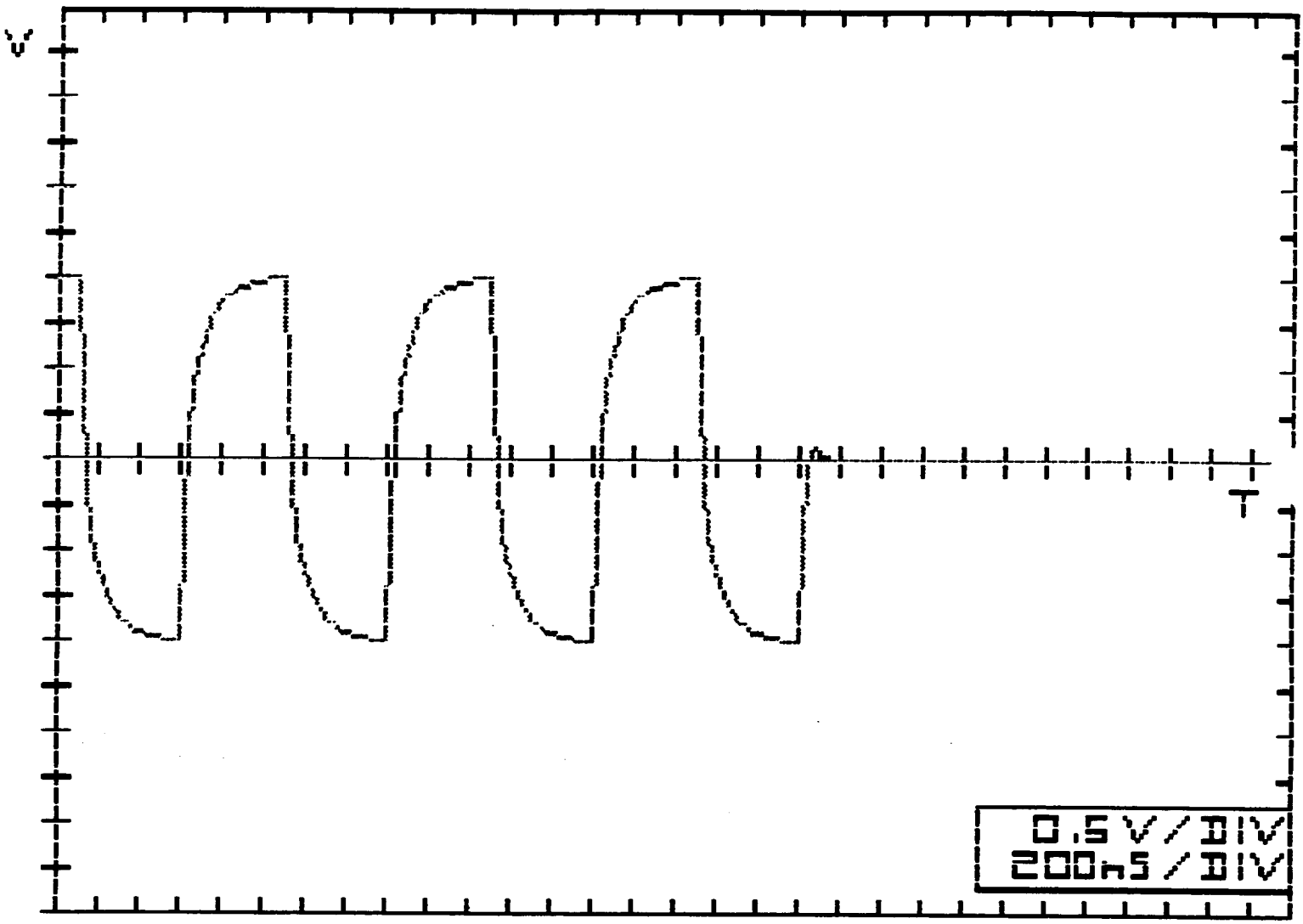

10.2 Bus Waveform At SCC–1, No User Fault

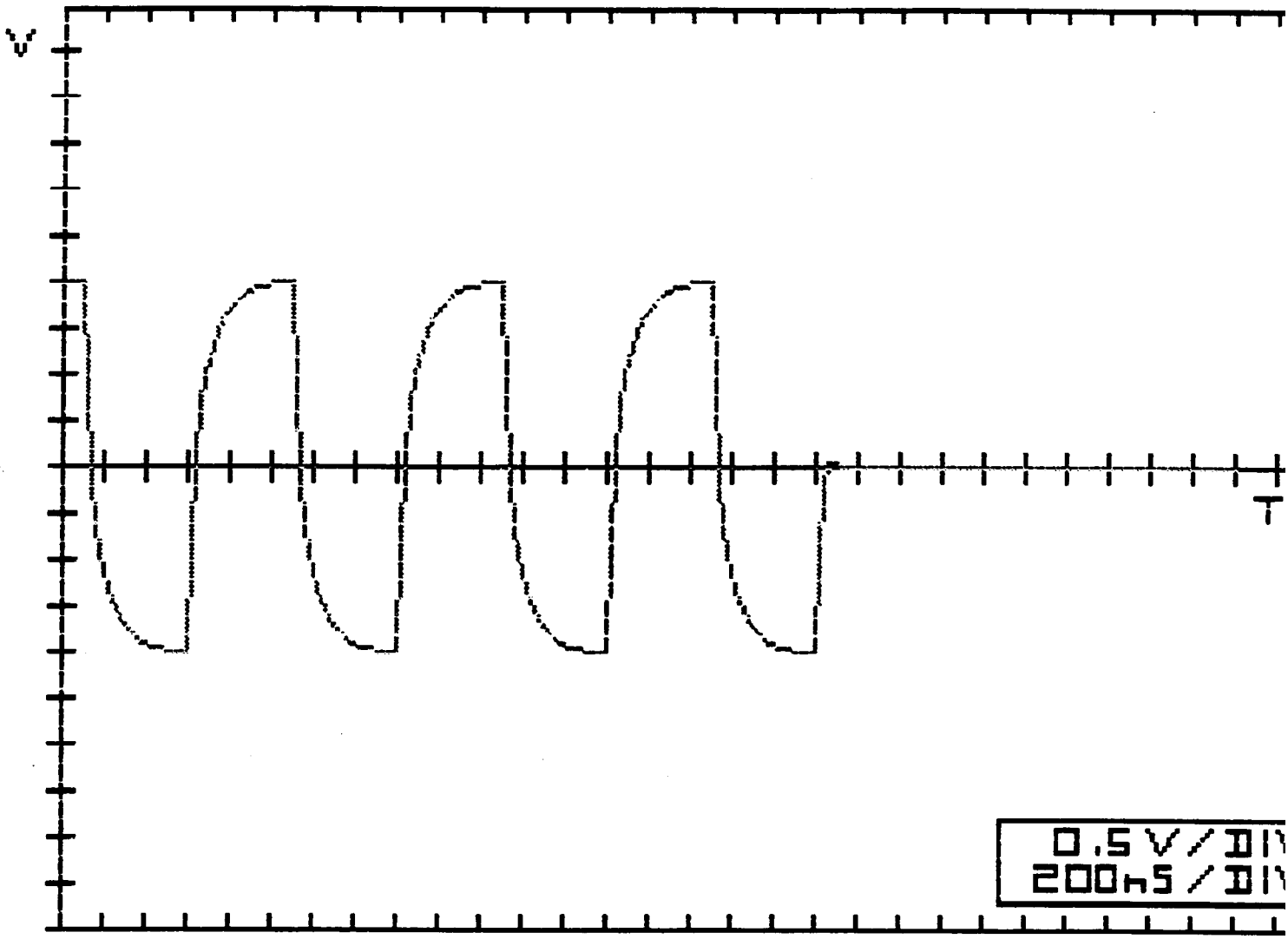

10.3 Bus Waveform At COM BDU-A, No User Fault

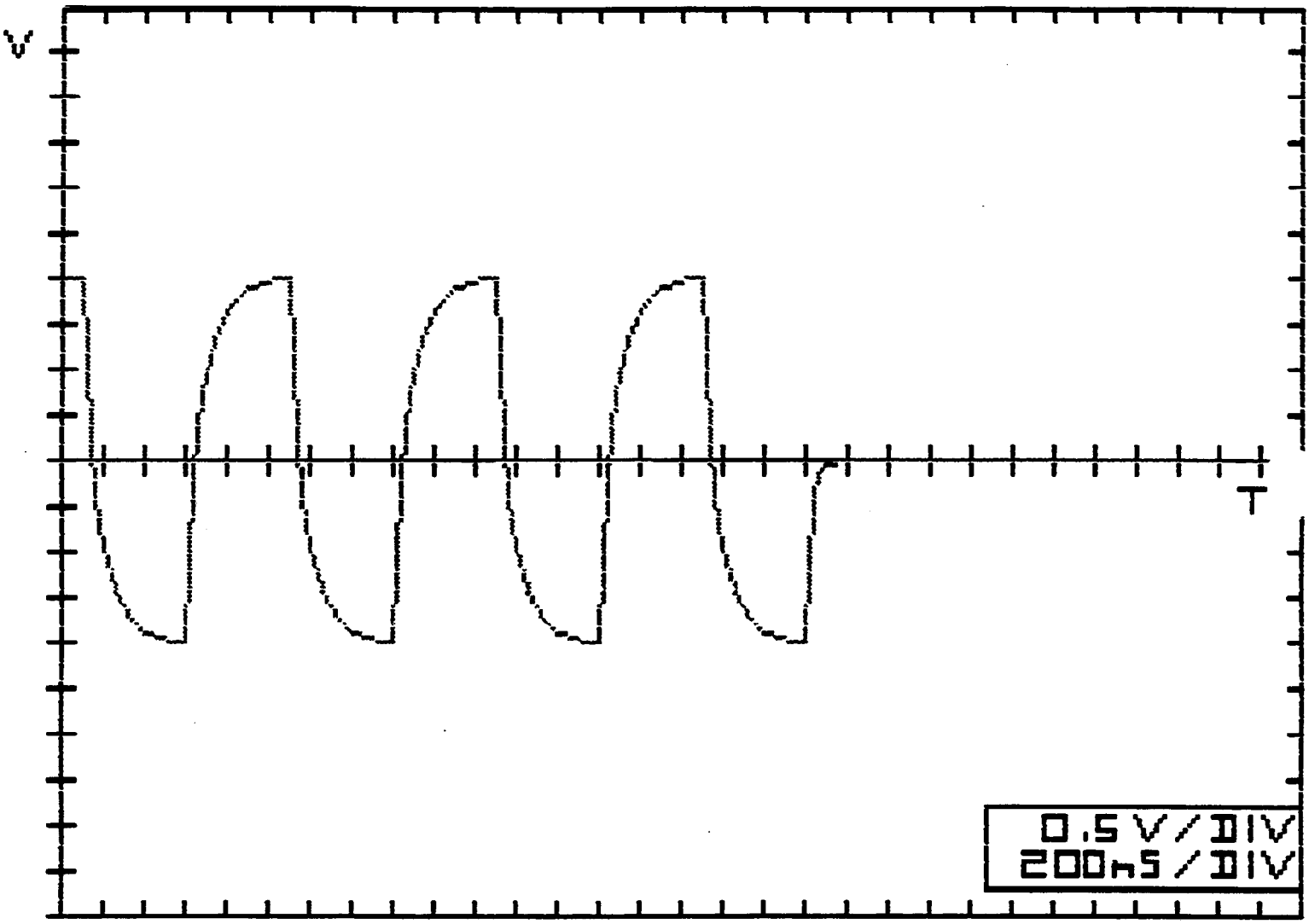

10.4 Bus Waveform At SENS BDU–B, No User Fault

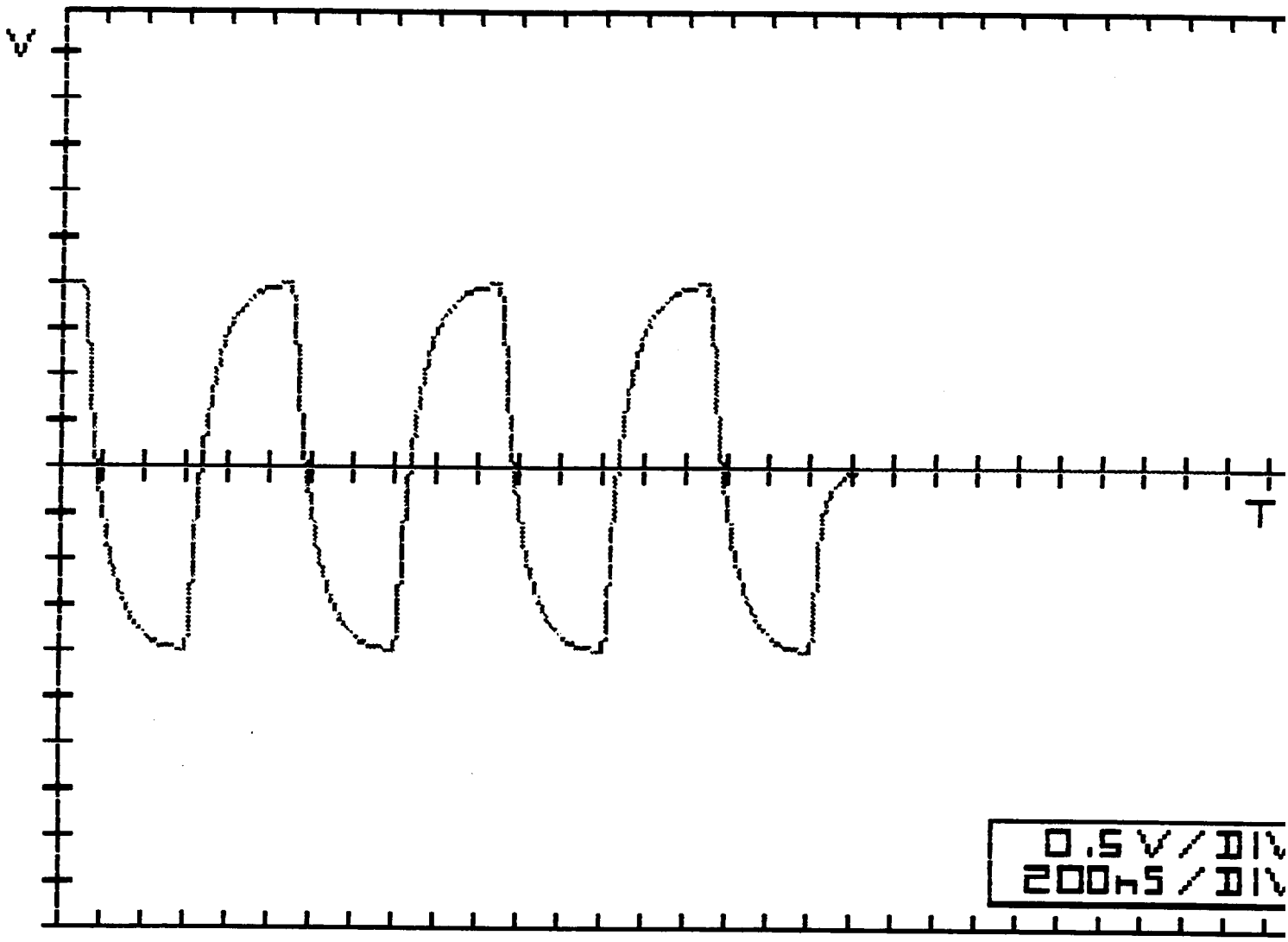

10.5 Bus Waveform At PWR BDU–A, No User Fault

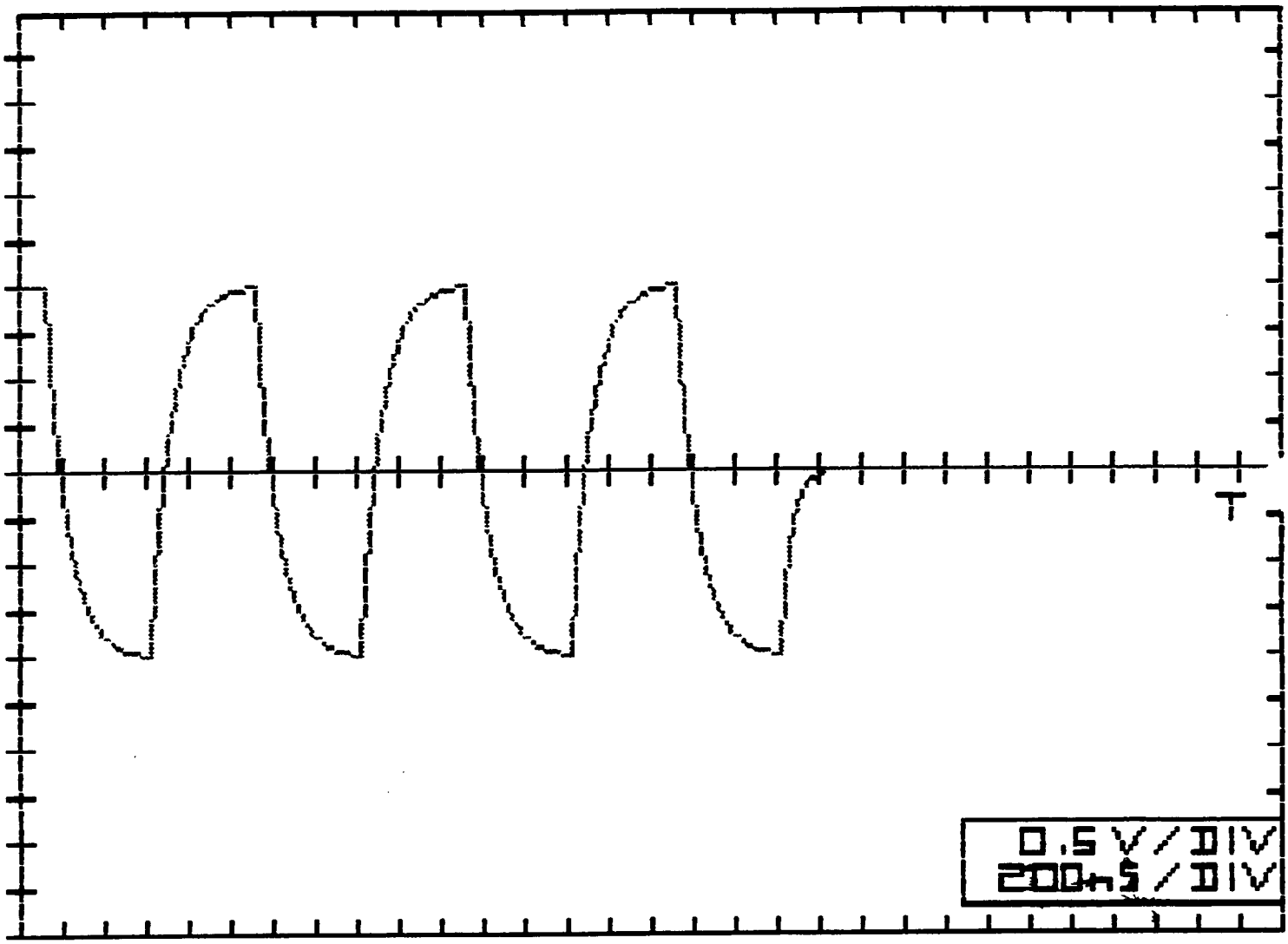

10.6 Bus Waveform At DAS BDU–B, No User Fault

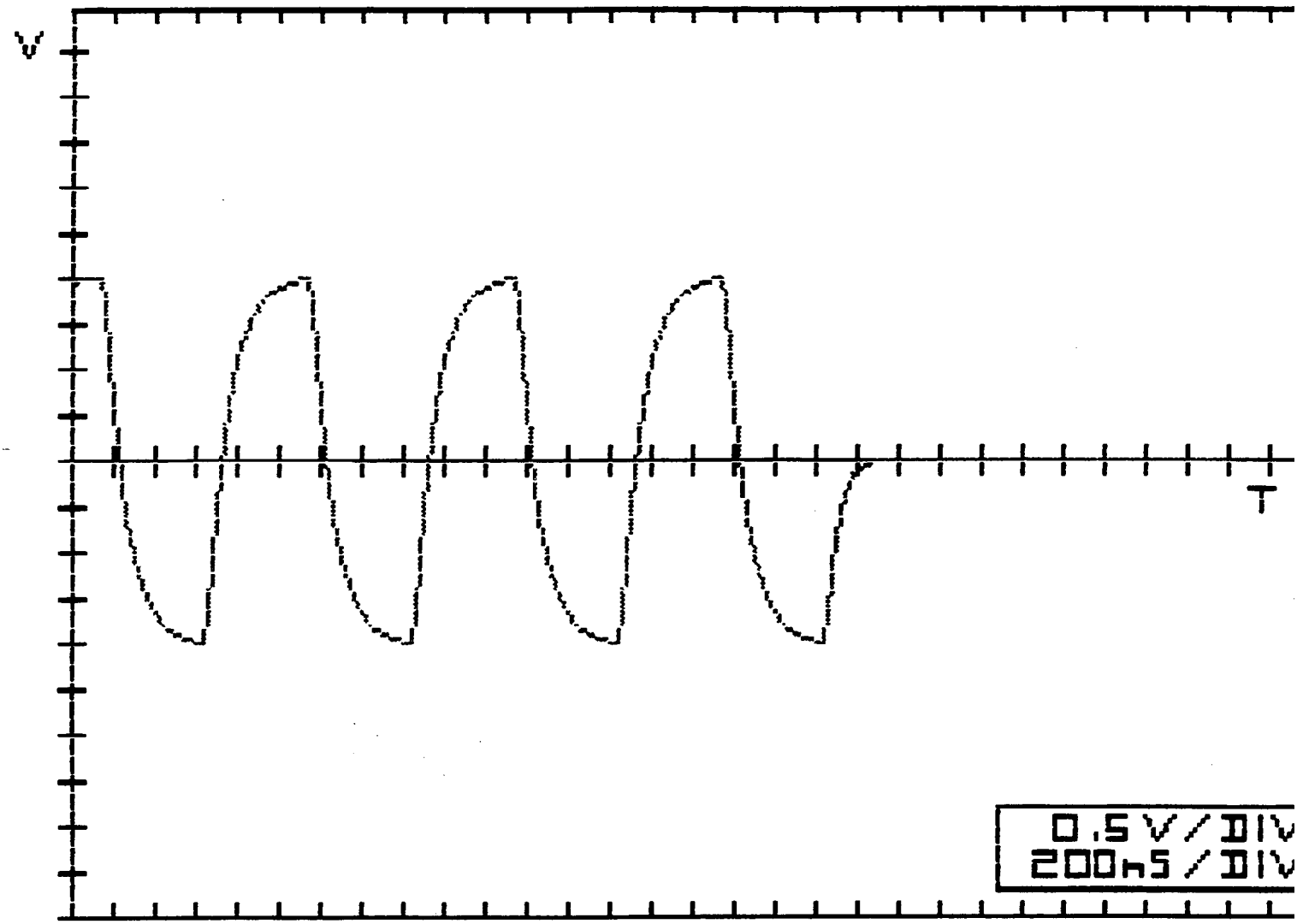

10.7 Bus Waveform At CTIU-2, SCC–1 Shorted

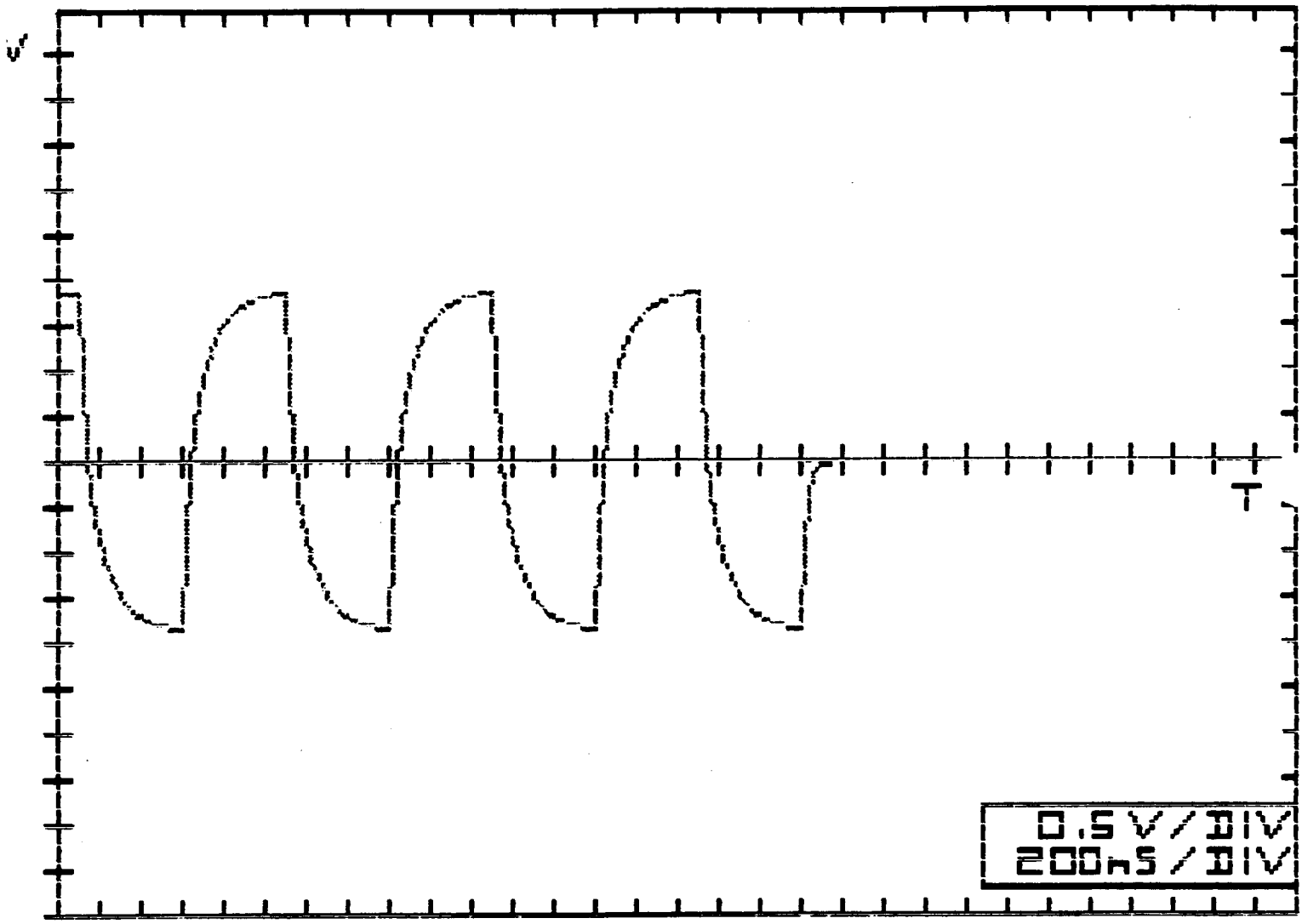

10.8 Bus Waveform At CTIU-2, DAS BDU-B Shorted

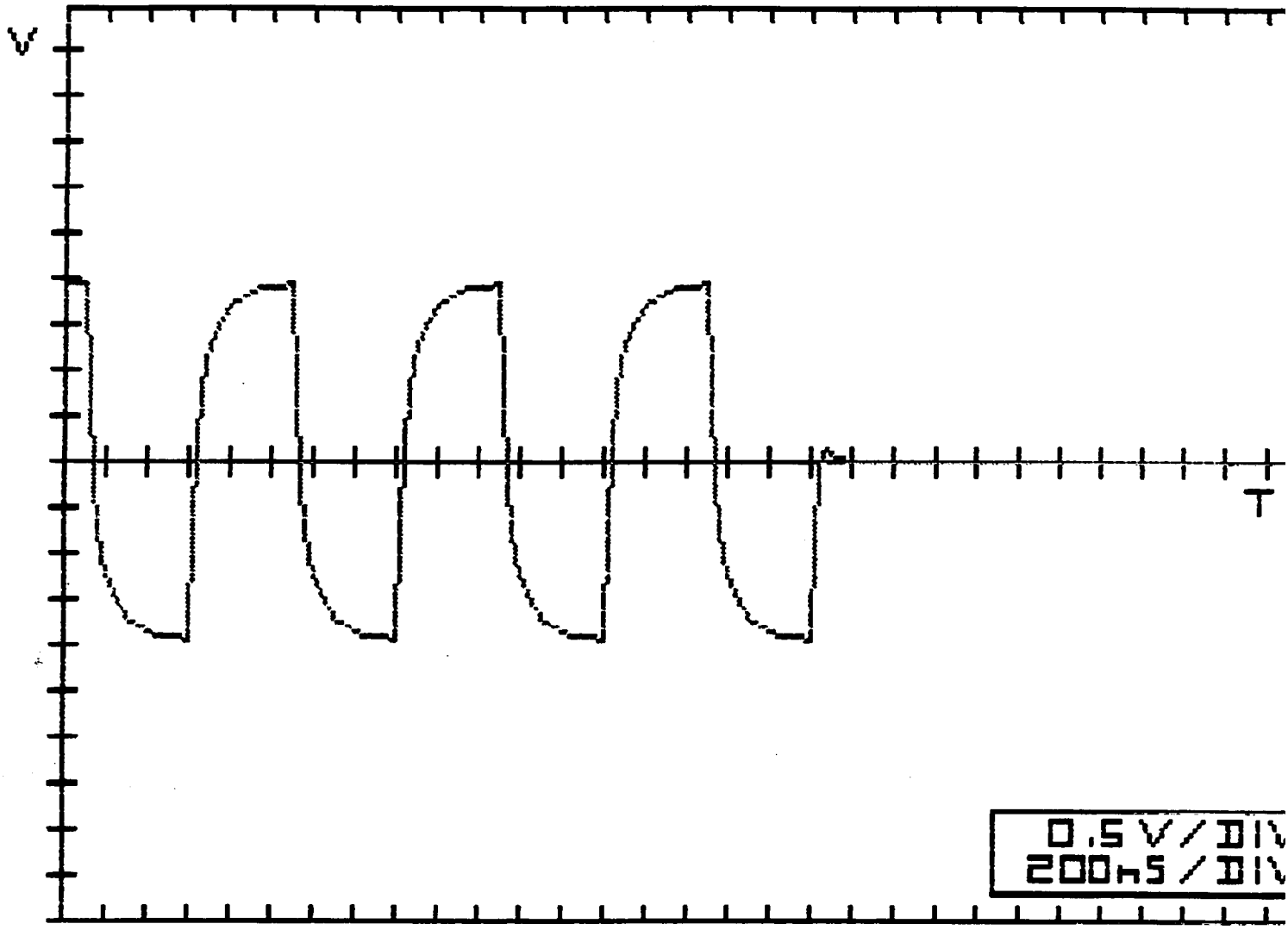

MARTIN MARIETTA
ASTRO–SPACE

EOS–DN–C&DH–047

DESIGN NOTE

TITLE: Analysis of Low-Rate Science Bus Electrical Implementation

AUTHOR: William D. Henn

AUTHOR'S MANAGER: _____ **DATE** 8/24/93

SE&I MANAGER: _____ **DATE** _____

CHIEF ENGINEER: _____ **DATE** 8/25/93

REVISIONS

LETTER	DESCRIPTION	DATE	AUTHOR
–	Initial Release	8/20/93	W. D. Henn

MARTIN MARIETTA
ASTRO–SPACE

DESIGN NOTE SUMMARY

DN#: EOS–C&DH–047 **Revision:** – **Date:** 8/20/93
Title: Analysis of Low-Rate Science Bus Electrical Implementation
Author: William D. Henn **Source ID (ESTA, PD, Memo, etc.):**

Purpose/Questions to be Answered:

Analyze the current Low-Rate Science Bus design, with current parameters, to determine if the signal levels at the inputs to the various Bus Terminals continue to satisfy the requirements of MIL-STD-1553B. Based on the analysis, recommend specific changes to the current bus design to ensure compliance with MIL-STD-1553B.

Summary/Answers:

Based on the revised bus coupler quantity, position, and user stub lengths, the received voltage levels at the user terminal inputs were computed and found to continue to satisfy the minimum voltage level specified in MIL-STD-1553B. The effects of reflections on signal quality were also analyzed through the use of a computer simulation program and were found to have negligible effect on the bus signal waveforms.

Recommendations: (Be Specific)	Accepted	Rejected	Baselined	Date
Update this analysis as the bus parameters continue to be refined.				

Open Items/Action Required	Responsible Person	Due Date

Comments

Form Completed By W. D. Henn **Date** 8/19/93 **Page** 1 **of**

TABLE OF CONTENTS

SECTION / PARAGRAPH	TITLE	PAGE
1	SCOPE	1
2	APPLICABLE DOCUMENTS	2
3	REQUIREMENTS	3
3.1	Definition	3
3.1.1	Command and Telemetry Bus Description	3
3.1.2	MIL-STD-1553B Requirements	3
3.1.3	Bus Interfaces	5
3.2	Factors Affecting Bus Performance	5
3.2.1	Stub Length	7
4	PROPOSED DESIGN	7
4.1	Bus Configuration	7
4.1.1	Bus Coupler Design	8
4.1.2	User Terminals	8
4.2	Design Analysis	9
4.2.1	Received Voltage Levels	9
4.2.2	Signal Reflections	9
4.2.3	Transmit Voltage Level	12
4.3	Analysis Results	12
4.3.1	Received Signal Levels	12
4.3.2	Signal Reflections	12
4.3.3	Signal-to-Noise Performance	17
5	SUMMARY	17
6	RECOMMENDATION	17

APPENDIX I

10 SIMULATED BUS SIGNAL WAVEFORMS 18
10.1 Bus Waveform at CTIU 1, No Fault 19
10.2 Bus Waveform at SFE-A, No Fault 20
10.3 Bus Waveform at SFE-B, No Fault 21
10.4 Bus Waveform at MOPITT, No Fault 22
10.5 Bus Waveform at CERES-FORE, No Fault 23
10.6 Bus Waveform at CERES-AFT, No Fault 24
10.7 Bus Waveform at TEST PORT, No Fault 25
10.8 Bus Waveform at TEST PORT, Fault at CTIU-1 26
10.9 Bus Waveform at CTIU-1, Fault at TEST PORT 27

LIST OF TABLES

TABLE	TITLE	PAGE
I	Coupler Locations and Stub Lengths	8
II	Received Voltage Levels - Minimum Drive Voltage and One Fault	13
III	Received Voltage Levels - Minimum Drive Voltage and No Fault	14
IV	Received Voltage Levels - Maximum Drive Voltage and One Fault	15
V	Received Voltage Levels - Maximum Drive Voltage and No Fault	16

LIST OF FIGURES

FIGURE	TITLE	PAGE
1	Low-Rate Science Bus Architecture	4
2	Transformer Coupled Stub	6
3	Bus Equivalent Circuit	10
4	Coupler & Stub Equivalent Circuit	11

1 SCOPE

This design note analyzes the current Low-Rate Science Bus design concept for the Command and Data Handling Subsystem of the EOS Spacecraft to ensure complete compliance with MIL-STD-1553B.

2 APPLICABLE DOCUMENTS

PS20008567	Command and Data Handling Subsystem Specification
PN20005869	Electromagnetic Compatibility (EMC) Control Plan for the EOS-AM Spacecraft
MIL-STD-1553B 21 September 1978 NOTICE 2 8 September 1986	Digital Time Division Command/Response Multiplex Data Bus

3 REQUIREMENTS

3.1 Definition

3.1.1 Low-Rate Science Bus Description

The Low-Rate Science (C&T) Bus is a dual-redundant data network, with each network designed as a MIL-STD-1553B (1553B) data bus. The network is utilized to collect Science Data from the Low-Rate Instruments. The Science Formatting Equipment (SFE) contains two Bus Controllers (BCs), only one of which is active at a time, driving either bus with redundant stubs selectable from within the SFE and directing all of the data transmissions on the bus. Each bus has redundant stubs to each CTIU and single stubs to each Instrument.

As a 1553B bus, the network uses all of the standard 1553B components such as bus couplers, controllers, remote terminals, bus cable, terminations, terminal transformers, etc.

The bus must serve the following users:

Command and Telemetry Interface Unit 2 (CTIU-2)

Command and Telemetry Interface Unit 1 (CTIU-1)

Science Formatting Equipment-A (SFE-A)

Science Formatting Equipment-B (SFE-B)

MOPITT

CERES-FWD

CERES-AFT

TEST PORT

The physical bus architecture is shown in Figure 1.

3.1.2 MIL-STD-1553B Requirements

Since the proposed implementation of the Low-Rate Science Bus utilizes only components (terminals, couplers and cable) which meet 1553B specifications, this report will analyze the characteristics of only the physical implementation of the proposed Low-Rate Science Bus relative to the performance requirements of 1553B. Therefore, the reader is referred to MIL-STD-1553B for information regarding signal rise-time, transceiver design, etc.

For the purpose of this report, the following 1553B requirements apply, with one fault on the bus:

V_{xmit} (signal level at terminal output) = 18 Volts peak-to-peak, minimum

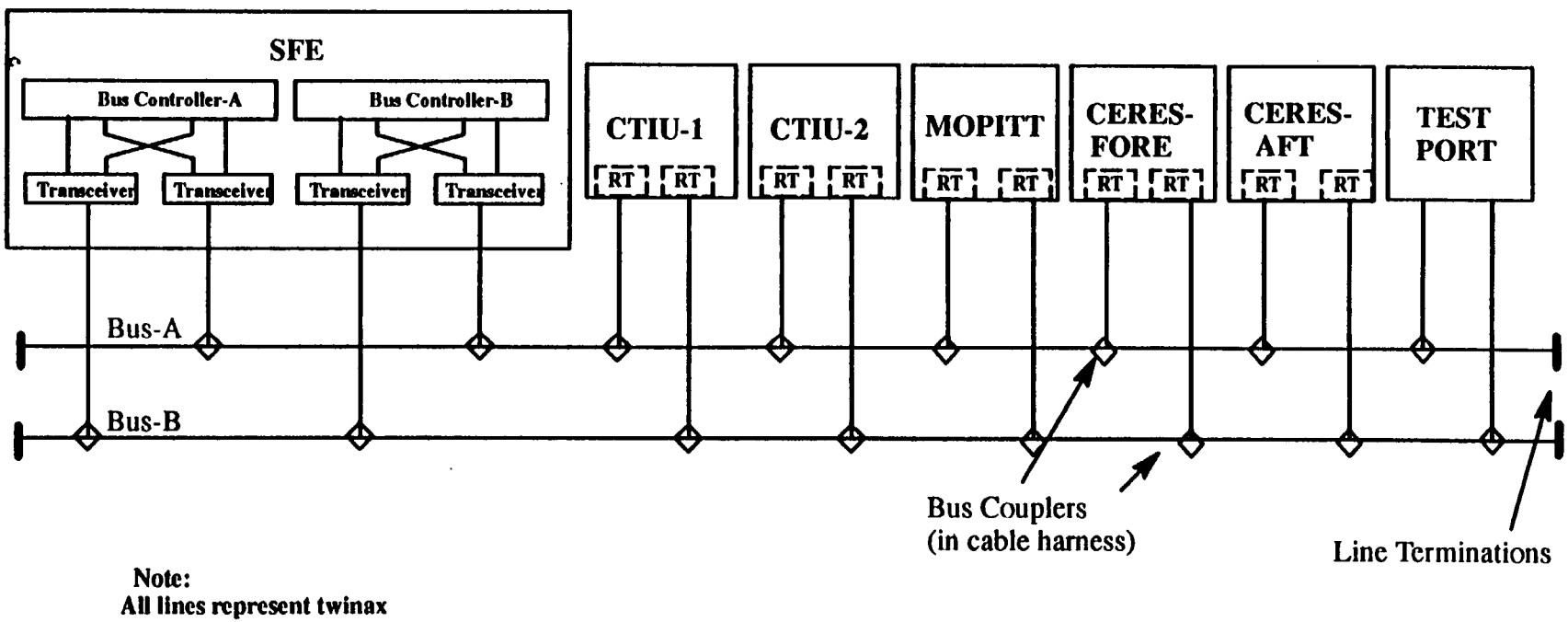

Figure 1. Command and Telemetry Bus Architecture

V_{rcv} (signal level at terminal input) = 1.00 Volt peak-to-peak, minimum

Z_I (receive terminal input impedance) = 1000 Ohms, minimum

Z_0 (bus cable characteristic impedance) = 77 Ohms

N_s:N_p (bus transformer turns ratio) = 1.414:1

R_{iso} (isolation resistor value) = $0.75Z_0$ = 57.75 Ohms

R_{fault} (shorted coupler impedance) = $1.5Z_0$ = 115.5 Ohms, minimum

α_c (cable attenuation) = 1.4 dB/100 ft, maximum

3.1.3 Bus Interfaces

The stubs for the proposed bus vary in length from 1.25 ft to 13.14 ft, as shown in Table I. All of the bus interfaces consist of a transformer-resistor coupling network as shown in Figure 2. This is prescribed by the 1553B specification and is necessary to minimize stub fault effects on the bus. In 1553B terminology, the users are referred to as "terminals" and consist of the bus interface circuitry (transceiver) connected to the stub via a transformer with a 2:1 turns ratio, the lower turns side being connected to the stub. All bus terminal (user) voltage measurements are referenced to this point of connection with the stub in accordance with 1553B requirements, rather than the actual point of connection with the transceiver.

3.2 Factors Affecting Bus Performance

There are two major factors involved in the design of the bus to ensure compliance with MIL-STD-1553B, namely, received signal amplitude and accuracy of signal edges. The signal amplitude is affected by stub length, terminating impedance, overall bus length and cable attenuation. The signal edge accuracy is affected by reflections caused by the bus couplers. These reflections occur because the couplers do not present a matched impedance to the bus and therefore cause a portion of the incident energy to be reflected back to the source. The magnitude of the reflection from a particular coupler increases as the length of the stub associated with that coupler increases. In general, the effect these reflections have on the received wave is dependent on both the length of the stubs and their position on the bus. Additional distortion of a lesser amount, is caused by dispersion and attenuation of the signals as they propagate along the bus. Dispersion, however, will not have a significant effect on pulse rise and fall times in bus networks which are less than 200 feet long.

Reflected waves on a bus cable begin to cause significant waveform distortion when their time of arrival at a point on the bus is delayed by more than the rise time of the original transmitted wave. Since the propagation delay of a bus cable is about 1.5 nanoseconds per foot, the reflection from a point 33 feet distant from the measurement point, will be delayed 100 nanoseconds from the original transmitted wave. As predicted by transmission-line theory. the wave reflections will cause changes in the shape of wave tops but will cause very little shift of zero-crossing times except at the end of a message. Distortion shows on the wave tops because reflections add to the much larger incident

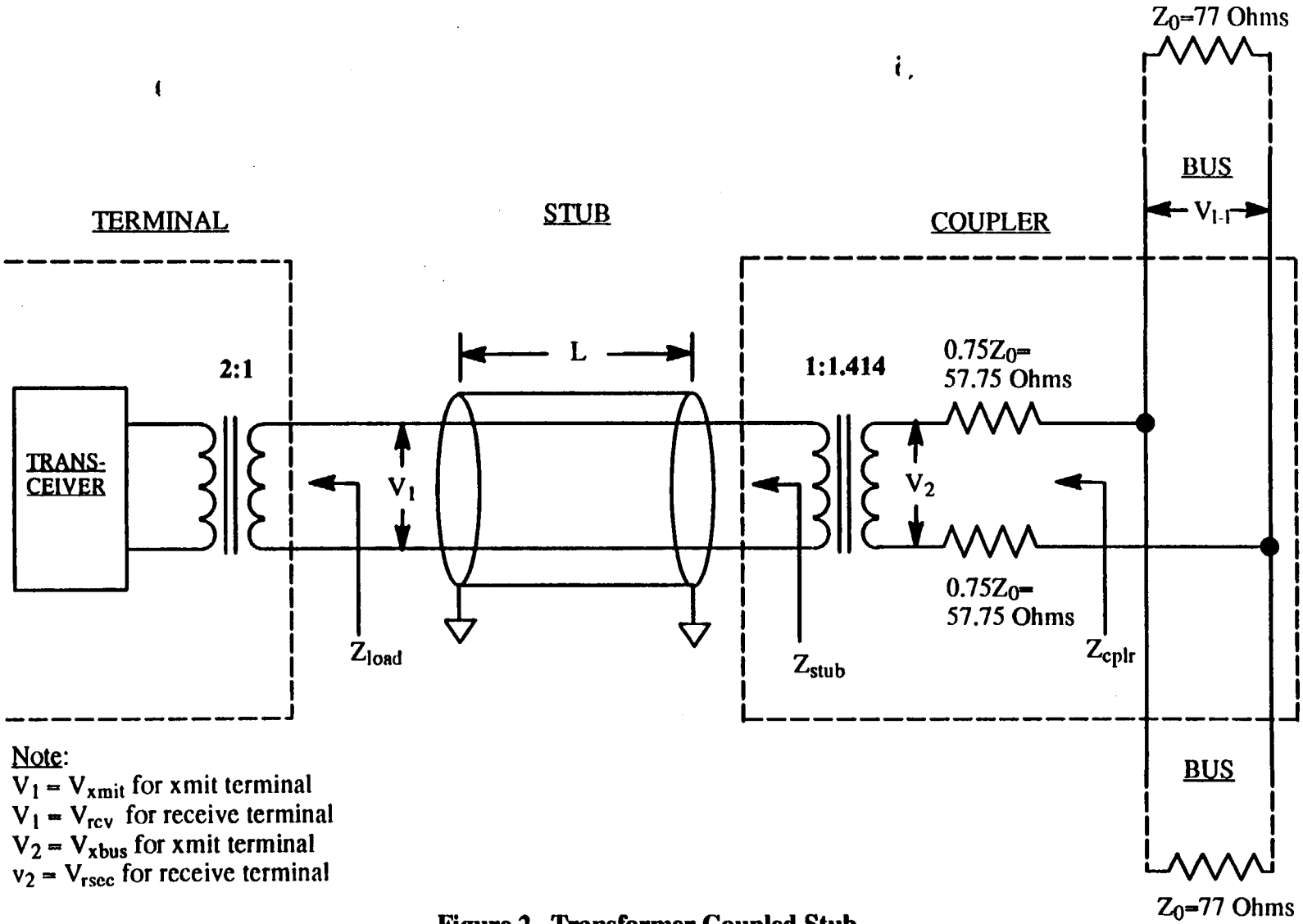

Note:
$V_1 = V_{xmit}$ for xmit terminal
$V_1 = V_{rcv}$ for receive terminal
$V_2 = V_{xbus}$ for xmit terminal
$v_2 = V_{rsec}$ for receive terminal

Figure 2. Transformer Coupled Stub

wave which switches rapidly between the maximum positive and negative levels. Waveform distortion is very evident at the end of a message where the incident wave has dropped to zero and reflected waves continue to arrive. The length of the distortion pulse at the end of a message is directly proportional to the length of the bus cable between the larger reflection points and the measurement point. The amplitude of the distortion pulse is determined primarily by the magnitude of the mismatch between the couplers and the bus. This mismatch is quantified through the calculation of a reflection coefficient for each coupler.

3.2.1 Stub Length

Although the minimum impedance presented to the stub by a terminal in the receive mode is limited to 1000 Ohms by the 1553B specification, the actual impedance presented to the bus transformer, and therefore the bus, is a complex transformation of that impedance which is, in turn, a function of the stub length. The transformation is given by the following formula:

$$Z_{stub} = Z_0 [Z_l \cos \beta\ell + j Z_0 \sin \beta\ell] / [Z_0 \cos \beta\ell + j Z_l \sin \beta\ell]$$

Where,

Z_0 = cable characteristic impedance

Z_l = termination impedance

$\beta = 2\pi / \lambda$

λ = wavelength of 1 MHz signal on stub (656.2 ft for a 67% velocity factor)

ℓ = physical length of stub

4 PROPOSED DESIGN

4.1 Bus Configuration

The proposed system is dual-redundant, however this report will only be concerned with the analysis of one bus since its mate has the same or similar physical layout as per information from the Electrical Accommodations Sub-Systems Engineering group. This Bus uses a 77 Ohm, doubly-terminated, twisted shielded pair as the interconnecting cable with couplers consisting of a resistively-isolated transformer. Table I lists the couplers by name and shows their location on the bus relative to the CTIU-1 coupler, together with the associated stub lengths. The location of the CTIU-1 coupler has been chosen as the primary reference point for coupler locations since it, or CTIU-2, is the Bus Controller.

Table I. Coupler Locations and Stub Lengths

Coupler ID	Coupler Name	Bus Location* (ft)	Stub Length (ft)
1	CTIU-2	−15.11	3.85
2	CTIU-1	−14.44	4.41
3	SFE-A	0.0	10.55
4	SFE-B	0.67	10.09
5	MOPITT	3.09	13.14
6	CERES-FORE	3.76	12.48
7	CERES-AFT	4.43	11.81
8	TEST PORT	9.80	1.25

* Bus locations relative to SFE-A

4.1.1 Bus Coupler Design

The proposed couplers are of standard 1553B design and consist of a transformer and isolation resistors connected across the bus as shown in Figure 2.

Under a no-fault situation, the coupler presents an impedance to the bus as shown in the following equation:

$$Z_{cplr} = [(N^2 Z_{stub})(Z_{toc}) / (N^2 Z_{stub} + Z_{toc})] + 1.5 R_{iso}$$

Where,

N = transformer turns ratio

Z_{stub} = stub load impedance transformed by stub length

R_{iso} = value of coupler isolation resistors

Z_{toc} = transformer open-circuit impedance

If the coupling transformer should become shorted, the minimum impedance presented to the bus is then equal to the value of the isolating resistors:

$$R_{fault} = 2 R_{iso} = 1.5 Z_0$$

4.1.2 User Terminals

Each user interfaces to the system by means of a terminal as shown in Figure 2. The terminal consists of a transformer-coupled transceiver which interfaces the user's digital circuitry to the 1553B data bus by providing the data encoding and line driving capability for transmitting and the line receiving,

data filtering and decoding functions for receiving. These terminals satisfy the 1553B specification, hence their characteristics are well known and will not need to be analyzed in detail with regard to their effect on system performance.

The minimum impedance presented to the stub by a terminal in the receive mode is:

$$Z_{rcvmin} = 1000 \text{ Ohms}$$

4.2 Design Analysis Methodology

4.2.1 Received Voltage Levels

In order to satisfy 1553B, the received voltage level (V_{rcv}) at the point of connection of the stub with the user terminal is specified to be a minimum of 1.0 V peak-to-peak with one user fault on the bus. This voltage is a function of the load presented to the stub by the terminal (R_l), the stub length (l), the value of the isolation resistors (R_{iso}), the bus transformer open-circuit impedance (Z_{oc}), the cable loss in the stub and on the bus, and the transmit terminal output voltage (V_{xmit}).

In order to make this computation in a straightforward manner, the calculation was split up into several parts for clarity of analysis. First, the total load placed on the bus by the bus cable terminations and all of the user couplers is determined. This impedance then forms a voltage divider with the isolation resistors of the transmitting coupler yielding the bus line-to-line voltage from the minimum transmit voltage level at the bus side of the coupling transformer. Once this is known, the individual user receive voltages can be computed from the voltage divider formed by the parallel combination of the open-circuit transformer and stub impedance and the receive coupler isolation resistance.

Figure 3 shows the electrical equivalent circuit of the bus. The input to the bus is at the left and is at the minimum specified input level of 18 V peak-to-peak multiplied by the coupler transformer turns ratio of 1.414, which yields a level of 23.30 V behind a total isolation resistance of $1.5Z_0$ Ohms. The bus cable is doubly-terminated and this is represented by the impedance of $Z_0/2$ in parallel with the bus. The next parallel impedance is R_{fault} which represents a fault impedance of $1.5Z_0$. This is the fault load specified by 1553B in the event of a shorted coupler transformer. The last parallel impedance, Z_{ct}, is the parallel combination of all of the user coupler loads.

Figure 4 is the equivalent circuit for an individual coupler and stub connected to a terminal in the receive mode. The bus sees an impedance Z_{cplr} which is the sum of the isolation resistance R_{iso} and the impedance formed by the parallel combination of the transformer open-circuit impedance and the stub impedance Z_{stub} multiplied by the transformer turns ratio squared (N^2).

Signal degradation due to cable loss is simply computed as a function of the distance between the transmitting and receiving couplers.

4.2.2 Signal Reflections

An analysis of the effect of signal reflections on the final data bit transition in a message was undertaken based on the location of the various couplers on the bus as determined by Electrical Accommodations S/S Engineering. This analysis was accomplished through the use of a computer

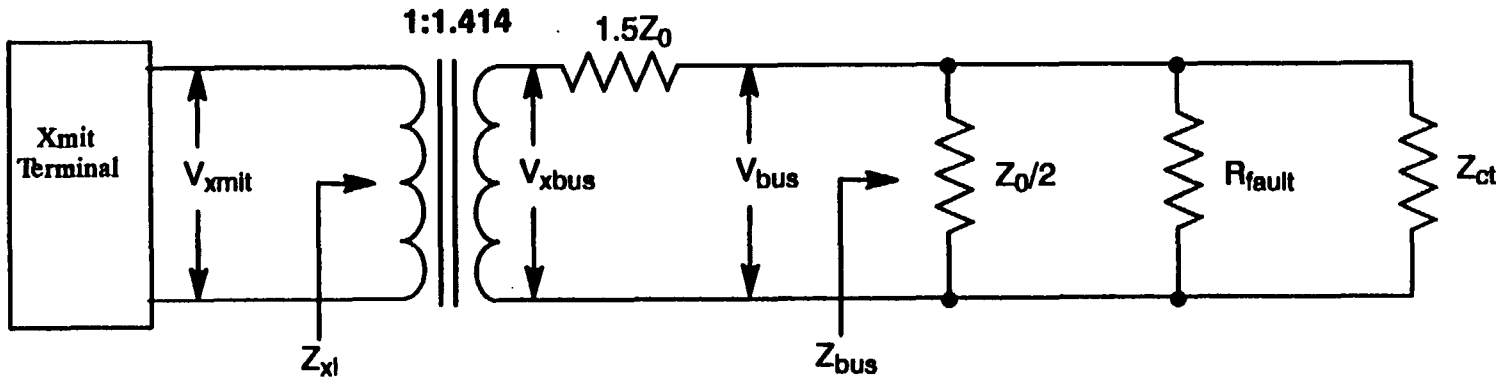

Note:
Z_{xl} = Total transmit terminal load
V_{xmit} = Min terminal output voltage into actual load
V_{xbus} = Min voltage at xmit xformer secondary
V_{bus} = Line-to-line bus voltage at xmit coupler
Z_{bus} = Total bus load as seen by xmit coupler
$Z_0/2$ = Value of double bus terminations
R_{fault} = $1.5Z_0$
Z_{ct} = Total coupler load

Figure 3. Bus Equivalent Circuit

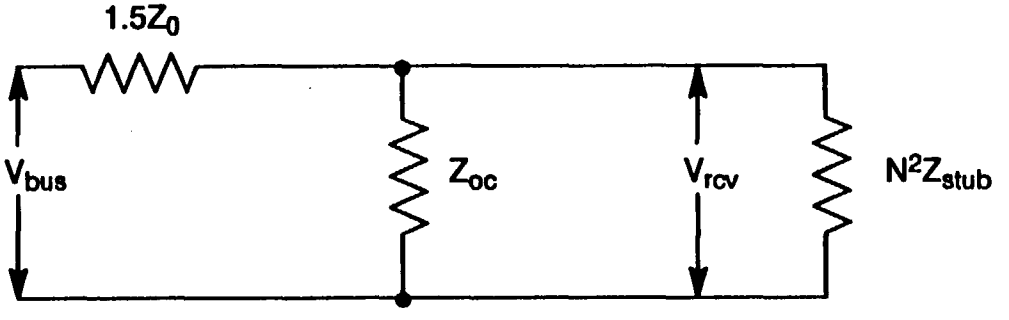

Note:
Z_{stub} = Value of receiver termination transformed by stub length
N = Transfromer turns ratio
Z_{oc} = Value of open-circuit transformer impedance
V_{bus} = Line-to-line bus voltage at receiving coupler location
V_{rcv} = Voltage level at input of receiving terminal

Figure 4. Coupler & Stub Equivalent Circuit

simulation program. Along with information on the coupler and data cable characteristics, other inputs to the program are the location of the couplers and their associated stub lengths and four programmable data bits which represent the final four bits of a message. The program computes the resulting waveform at any coupler location.

4.2.3 Transmit Voltage Level

The 1553B specification for minimum transmit terminal output voltage is 18 V peak-to-peak across 70 Ohms. This value of load impedance is what would be seen by a transmit terminal looking through a coupler into a bus using 70 Ohm cable with no other terminals on the bus. This is obviously not the real world, consequently, an allowance must be made for the change in load impedance due to the characteristic impedance of the cable used and the total number of couplers on the bus. Therefore, since the specification defines a minimum power level to be supplied to the bus load, the assumption is made that for small variations (<10%) in load, the amount of power the transmitter can supply to the load will remain constant.

4.3 Analysis Results

4.3.1 Received Signal Levels

All of the above computations were accomplished via a spread-sheet with the results listed in Tables II, III, IV and V.

The tables show the value of V_{rcv} for each of the user terminals for each of four cases. The minimum received voltage occurs at the MOPITT terminal which is at the end of a 13.14 ft stub, 3.09 feet distant from the SFE-A Bus Controller (transmitter).

For a system with one user fault and a transmitter which satisfies the 1553B specification for minimum output voltage of 18 V peak-to-peak into a 70 Ohm load, the min/max value of V_{rcv} is 2.51/2.76 V peak-to-peak, as shown in Table II.

For a system with no user faults and a minimum output transmitter (18 V p-p), the min/max value of V_{rcv} is 3.11/3.42 V peak-to-peak, as shown in Table III.

For a system with one user fault and a maximum output transmitter (27 V p-p), the min/max value of V_{rcv} is 3.76/4.14 V peak-to-peak, as shown in Table IV.

For a system with no user faults and a maximum output transmitter (27 V p-p), the min/max value of V_{rcv} is 4.66/5.13 V peak-to-peak, as shown in Table V.

The stub lengths range from 1.25 ft to 13.14 ft with corresponding coupler impedance magnitudes of 1664 and 862 Ohms, respectively. With one user fault, the magnitude of the total load ($|Z_{xl}|$) presented to the transmit terminal is 69.94 Ohms, which is less than a 1% reduction from the 1553B specified loading of 70 Ohms. Therefore, the assumption that the transmit terminal could supply the same power to a reduced load impedance is reasonable.

4.3.2 Signal Reflections

The production of a distortion pulse at the end of a message due to signal reflections was investigated through the use of a computer simulation program. The program computes and displays the bus waveform at any chosen coupler location. Since the coupler locations have been refined by the

Table II. Received Voltage Levels - Minimum Drive Voltage and One Fault

Cable loss (dB/100 ft) = 1.40
# of Faults = 1
Z0 (Ohms) = 77.00
Vxmin (V p-p) = 18.00 (Across 70 Ohm load)
Rfault (Ohms) = 115.50
Vxmit (V p-p) = 17.99 (At primary (xmtr) side of bus xformer - load < 70 Ohms)
Vxbus (V p-p) = 25.44 (At secondary (bus) side of bus xformer)
Ns:Np = 1.41 (Bus xformer turns ratio)
Riso (Ohms) = 57.75 (Bus isolation resistor value)
Min Vrcv (V p-p) = 2.51
Max Vrcv (V p-p) = 2.76

Column Headings:
Vrsec = Voltage at bus side of receiver bus transformer
Vrcv = Voltage at receiver end of stub, attenuated by cable loss

Transformer Parameters: Lsec = 6.37 mH
Cshunt = 53 pF

Total Cplr Load Zct (Ohms)	Total Bus Load Zct||Z0/2 (Ohms)	Xmtr Load |Zxl| (Ohms)
156.80	24.38	69.94

Coupler ID#	Name	Xmit=1 Rcv=0	Abs Bus Location (ft)	Rel Bus Location (ft)	Stub length (ft)	|Zcplr| (Ohms)	|Ycplr| (Siemens)	|Yrcplr| (on bus)	Vrsec (Volts)	Vrcv (1V min)	Vbus (Volts)
1	CTIU-2	0	.00	-15.11	3.85	1431	.0006989	.0006989	3.845	2.702	4.33
2	CTIU-1	0	.67	-14.44	4.41	1388	.0007203	.0007203	3.839	2.696	4.33
3	SFE-A	1	15.11	.00	10.55	970	.0010314	0	3.731	2.594	4.43
4	SFE-B	0	15.78	.67	10.09	994	.0010060	.0010060	3.744	2.605	4.43
5	MOPITT	0	18.20	3.09	13.14	862	.0011605	.0011605	3.622	2.508	4.41
6	CERES-FORE	0	18.87	3.76	12.48	902	.0011085	.0011085	3.654	2.533	4.41
7	CERES-AFT	0	19.54	4.43	11.81	924	.0010826	.0010826	3.668	2.545	4.40
8	TEST PORT	0	24.91	9.80	1.25	1664	.0006009	.0006009	3.910	2.760	4.37

Table III. Received Voltage Levels - Minimum Drive Voltage and No Fault

Cable loss (dB/100 ft) = 1.40
# of Faults = 0
Z0 (Ohms) = 77.00
Vxmin (V p-p) = 18.00 (Across 70 Ohm load)
Rfault (Ohms) = .00
Vxmit (V p-p) = 18.41 (At primary (xmtr) side of bus xformer - load < 70 Ohms)
Vxbus (V p-p) = 26.03 (At secondary (bus) side of bus xformer)
Ns:Np = 1.41 (Bus xformer turns ratio)
Riso (Ohms) = 57.75 (Bus isolation resistor value)
Min Vrcv (V p-p) = 3.11
Max Vrcv (V p-p) = 3.42

Column Headings:
Vrsec = Voltage at bus side of receiver bus transformer
Vrcv = Voltage at receiver end of stub, attenuated by cable loss

Transformer Parameters: Lsec = 6.37 mH
Cshunt = 53 pF

Total Cplr Load Zct (Ohms)	Total Bus Load Zct||Z0/2 (Ohms)	Xmtr Load |Zxl| (Ohms)
156.80	30.91	73.21

Coupler ID#	Name	Xmit=1 Rcv=0	Abs Bus Location (ft)	Rel Bus Location (ft)	Stub length (ft)	|Zcplr| (Ohms)	|Ycplr| (Siemens)	|Yrcplr| (on bus)	Vrsec (Volts)	Vrcv (1V min)	Vbus (Volts)
1	CTIU-2	0	.00	-15.11	3.85	1431	.0006989	.0006989	4.764	3.348	5.36
2	CTIU-1	0	.67	-14.44	4.41	1388	.0007203	.0007203	4.757	3.340	5.37
3	SFE-A	1	15.11	.00	10.55	970	.0010314	0	4.622	3.214	5.50
4	SFE-B	0	15.78	.67	10.09	994	.0010060	.0010060	4.639	3.228	5.49
5	MOPITT	0	18.20	3.09	13.14	862	.0011605	.0011605	4.488	3.107	5.47
6	CERES-FORE	0	18.87	3.76	12.48	902	.0011085	.0011085	4.528	3.138	5.46
7	CERES-AFT	0	19.54	4.43	11.81	924	.0010826	.0010826	4.545	3.154	5.46
8	TEST PORT	0	24.91	9.80	1.25	1664	.0006009	.0006009	4.845	3.420	5.41

Table IV. Received Voltage Levels - Maximum Drive Voltage and One Fault

Cable loss (dB/100 ft)	=	1.40	
# of Faults	=	1	
Z0 (Ohms)	=	77.00	
Vxmin (V p-p)	=	27.00	(Across 70 Ohm load)
Rfault (Ohms)	=	115.50	
Vxmit (V p-p)	=	26.99	(At primary (xmtr) side of bus xformer - load < 70 Ohms)
Vxbus (V p-p)	=	38.16	(At secondary (bus) side of bus xformer)
Ns:Np	=	1.41	(Bus xformer turns ratio)
Riso (Ohms)	=	57.75	(Bus isolation resistor value)
Min Vrcv (V p-p)	=	3.76	
Max Vrcv (V p-p)	=	4.14	

Column Headings:
Vrsec = Voltage at bus side of receiver bus transformer
Vrcv = Voltage at receiver end of stub, attenuated by cable loss

Transformer Parameters: Lsec = 6.37 mH
Cshunt = 53 pF

Total Cplr Load Zct (Ohms)	Total Bus Load Zct||Z0/2 (Ohms)	Xmtr Load |Zxl| (Ohms)
156.80	24.38	69.94

Coupler ID#	Name	Xmit=1 Rcv=0	Abs Bus Location (ft)	Rel Bus Location (ft)	Stub length (ft)	|Zcplr| (Ohms)	|Ycplr| (Siemens)	|Yrcplr| (on bus)	Vrsec (Volts)	Vrcv (1V min)	Vbus (Volts)
1	CTIU-2	0	.00	-15.11	3.85	1431	.0006989	.0006989	5.767	4.053	6.49
2	CTIU-1	0	.67	-14.44	4.41	1388	.0007203	.0007203	5.758	4.044	6.50
3	SFE-A	1	15.11	.00	10.55	970	.0010314	0	5.596	3.891	6.65
4	SFE-B	0	15.78	.67	10.09	994	.0010060	.0010060	5.616	3.908	6.65
5	MOPITT	0	18.20	3.09	13.14	862	.0011605	.0011605	5.433	3.762	6.62
6	CERES-FORE	0	18.87	3.76	12.48	902	.0011085	.0011085	5.482	3.799	6.61
7	CERES-AFT	0	19.54	4.43	11.81	924	.0010826	.0010826	5.503	3.818	6.61
8	TEST PORT	0	24.91	9.80	1.25	1664	.0006009	.0006009	5.866	4.140	6.55

Table V. Received Voltage Levels - Maximum Drive Voltage and No Fault

Cable loss (dB/100 ft) = 1.40
# of Faults = 0
Z0 (Ohms) = 77.00
Vxmin (V p-p) = 27.00 (Across 70 Ohm load)
Rfault (Ohms) = .00
Vxmit (V p-p) = 27.61 (At primary (xmtr) side of bus xformer - load < 70 Ohms)
Vxbus (V p-p) = 39.04 (At secondary (bus) side of bus xformer)
Ns:Np = 1.41 (Bus xformer turns ratio)
Riso (Ohms) = 57.75 (Bus isolation resistor value)
Min Vrcv (V p-p) = 4.66
Max Vrcv (V p-p) = 5.13

Column Headings:
Vrsec = Voltage at bus side of receiver bus transformer
Vrcv = Voltage at receiver end of stub, attenuated by cable loss

Transformer Parameters: Lsec = 6.37 mH
Cshunt = 53 pF

Total Cplr Load Zct (Ohms)	Total Bus Load Zct||Z0/2 (Ohms)	Xmtr Load |Zxl| (Ohms)
156.80	30.91	73.21

Coupler ID#	Name	Xmit=1 Rcv=0	Abs Bus Location (ft)	Rel Bus Location (ft)	Stub length (ft)	|Zcplr| (Ohms)	|Ycplr| (Siemens)	|Yrcplr| (on bus)	Vrsec (Volts)	Vrcv (1V min)	Vbus (Volts)
1	CTIU-2	0	.00	-15.11	3.85	1431	.0006989	.0006989	7.146	5.022	8.04
2	CTIU-1	0	.67	-14.44	4.41	1388	.0007203	.0007203	7.135	5.010	8.05
3	SFE-A	1	15.11	.00	10.55	970	.0010314	0	6.933	4.821	8.24
4	SFE-B	0	15.78	.67	10.09	994	.0010060	.0010060	6.959	4.842	8.23
5	MOPITT	0	18.20	3.09	13.14	862	.0011605	.0011605	6.732	4.661	8.20
6	CERES-FORE	0	18.87	3.76	12.48	902	.0011085	.0011085	6.792	4.708	8.19
7	CERES-AFT	0	19.54	4.43	11.81	924	.0010826	.0010826	6.818	4.731	8.18
8	TEST PORT	0	24.91	9.80	1.25	1664	.0006009	.0006009	7.268	5.129	8.11

Electrical Accommodations S/S Engineering Group, several locations were chosen for analysis to ascertain the quality of the signal waveform along the entire length of the bus. Under no-fault conditions, with CTIU-2 as the transmitter, points-of-view were selected at the couplers for CTIU-1, SFE-A, SFE-B, MOPITT, CERES-FORE, CERES-AFT and the TEST PORT. For a single-fault condition, the waveform was viewed at the TEST PORT with CTIU-1 shorted. The short was then moved to the TEST PORT position and the viewpoint was moved to the CTIU-1 position. The first viewpoint was chosen to maximally attenuate the bus signal by a fault adjacent to the transmitter, and the second was chosen to produce the maximum amount of delay for the reflected signal from the viewing point. The computed bus signals are shown in Appendix I.

The simulations for each of the cases described above showed no significant production of a distortion pulse at the end of the simulated message.

4.3.3 Signal-to-Noise Performance

The system will satisfy the noise rejection specification of 1553B if it exhibits a maximum word error rate of one part in 10^7, on all words received by any user terminal, after validation checks, when operating in the presence of additive white Gaussian noise distributed over a bandwidth of 1.0 kHz to 4.0 MHz at an RMS amplitude of 140 mV. A word error includes any fault which is measured with a 2.1 V peak-to-peak, line-to-line, input to the terminal as measured at the connection point of the terminal to the stub.

Since the minimum received voltage level, as determined by analysis, is 2.39 V peak-to-peak and the injected noise due to EMI fields generated by the Spacecraft is expected to fall far below the 140 mV RMS test level, due to the stringent requirements on maintaining a low level of EMI as specified in the Electromagnetic Compatibility Control Plan, PN20005869, the resulting signal-to-noise ratio should compare favorably with the 1553B test level.

5 SUMMARY

This analysis reflects a refinement of the coupler positions on the bus and stub lengths. After reviewing the purpose of the Low-Rate Science Bus and a brief discussion of the pertinent parts of the 1553B specification, a detailed analysis was made of the signal amplitude characteristics and waveform distortion of the proposed Low-Rate Science Bus. Based on the revised coupler positions and stub lengths, the proposed system satisfies the received voltage specification of MIL-STD-1553B. A detailed analysis of the effect of system reflections on signal quality also shows no significant degradation of the bus signal waveform.

6 RECOMMENDATION

This analysis, which is based on the current bus layout, shows that the proposed Low-Rate Science Bus satisfies the voltage criteria of 1553B, and a detailed investigation into the effect of signal reflections shows negligible effect. The recommendation is to continue to update this analysis until the coupler positions and stub lengths are finalized.

APPENDIX I

10 SIMULATED BUS SIGNAL WAVEFORMS

All of the following waveforms are simulations of the last four bits of a message sent from CTIU 1, as seen at the bus locations indicated. The bit pattern is 1111, representing the last four bits in the message. This Manchester-encoded pattern was transmitted with a rise time of 200 ns. The distortion created by bus reflections is seen as an excursion of the rising edge of the final data bit above the zero-voltage axis. If the distortion is present in sufficient amplitude to exceed the receiver threshold, it could be interpreted as an additional bit in the message, thus creating an error. None of the waveforms exhibit more than a negligible amount of this distortion.

10.1 Bus Waveform at CTIU 1, No Fault

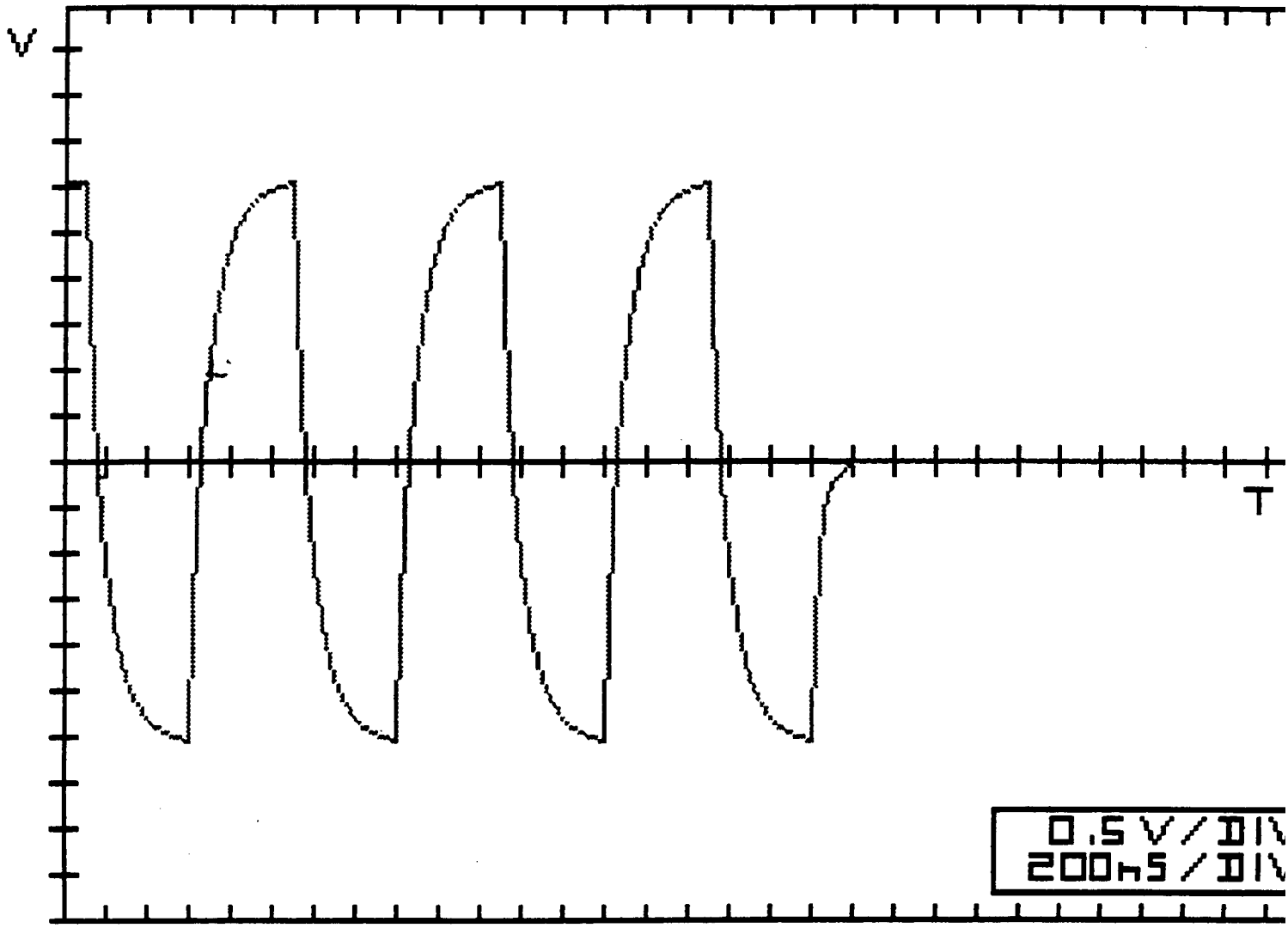

10.2 Bus Waveform at SFE-A, No Fault

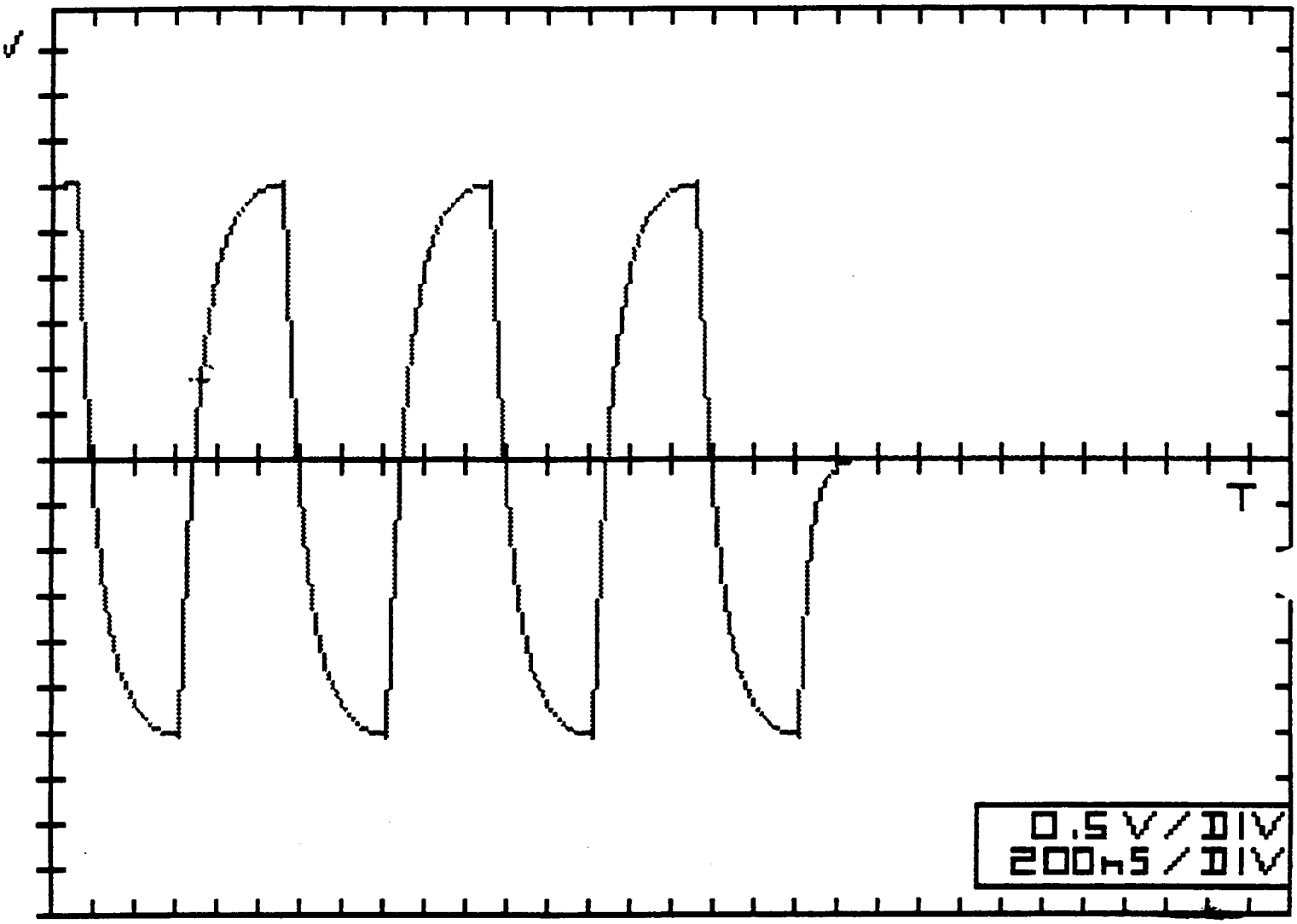

10.3 Bus Waveform at SFE-B, No Fault

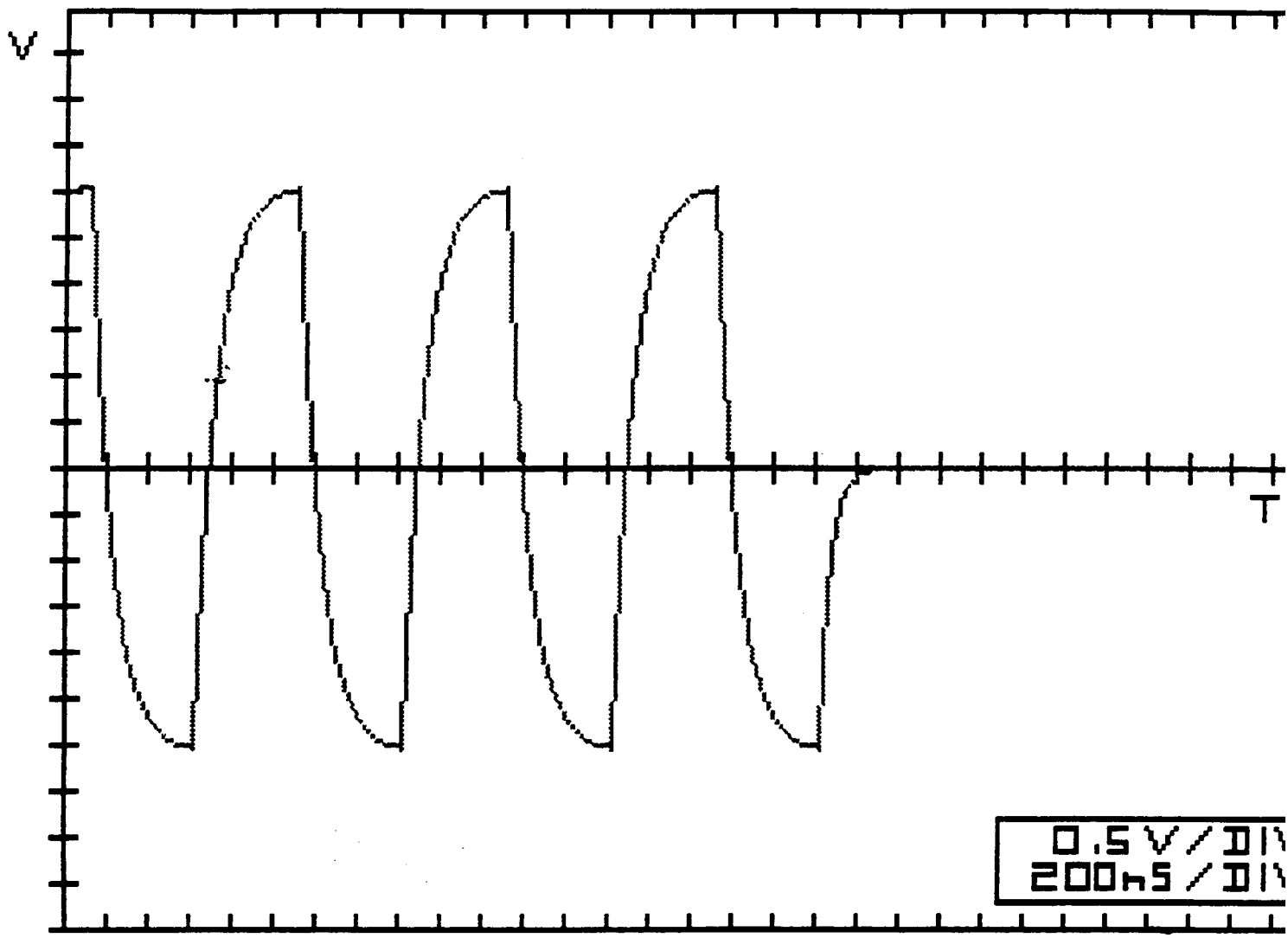

10.4 Bus Waveform at MOPITT, No Fault

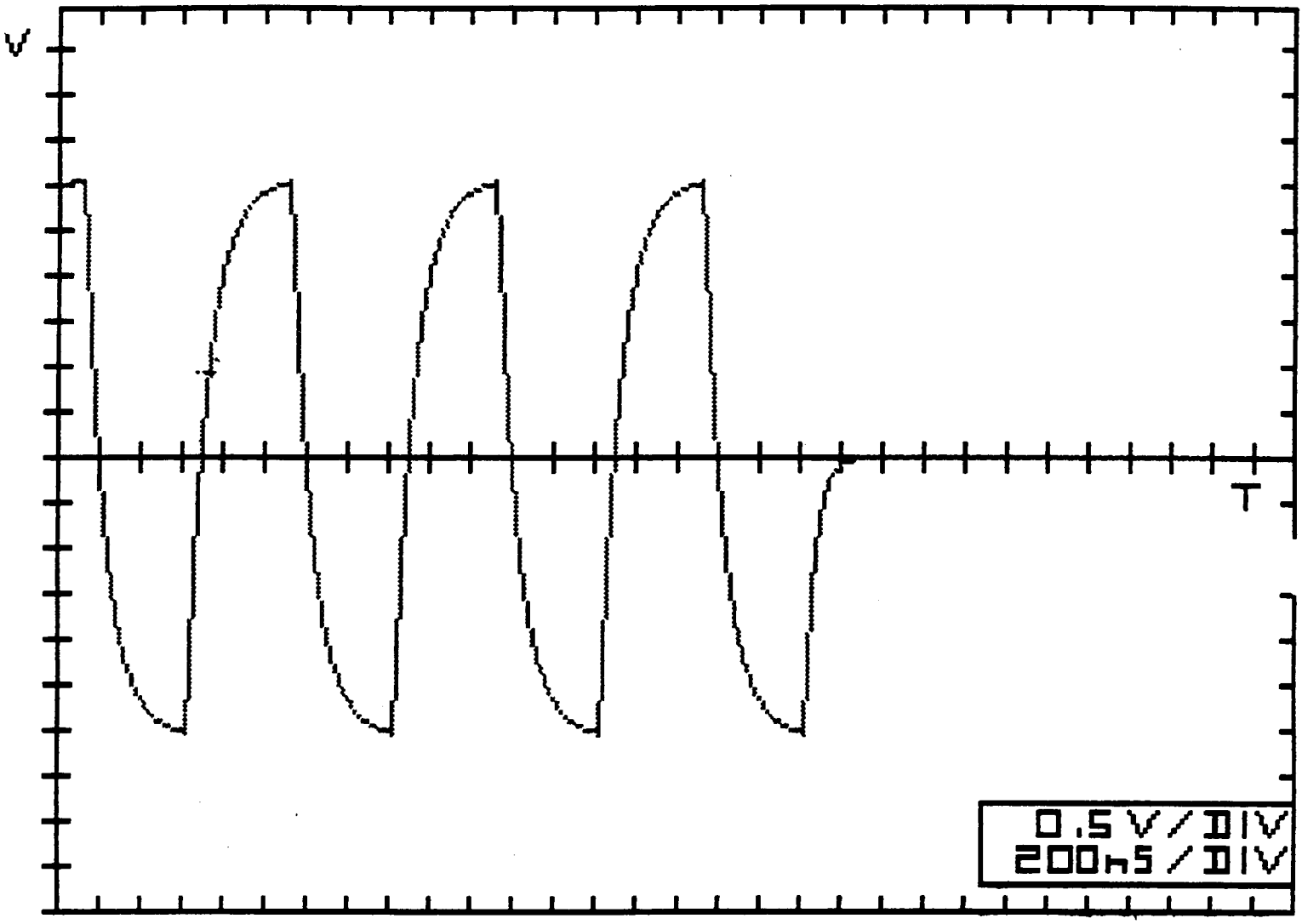

10.5 Bus Waveform at CERES-FORE, No Fault

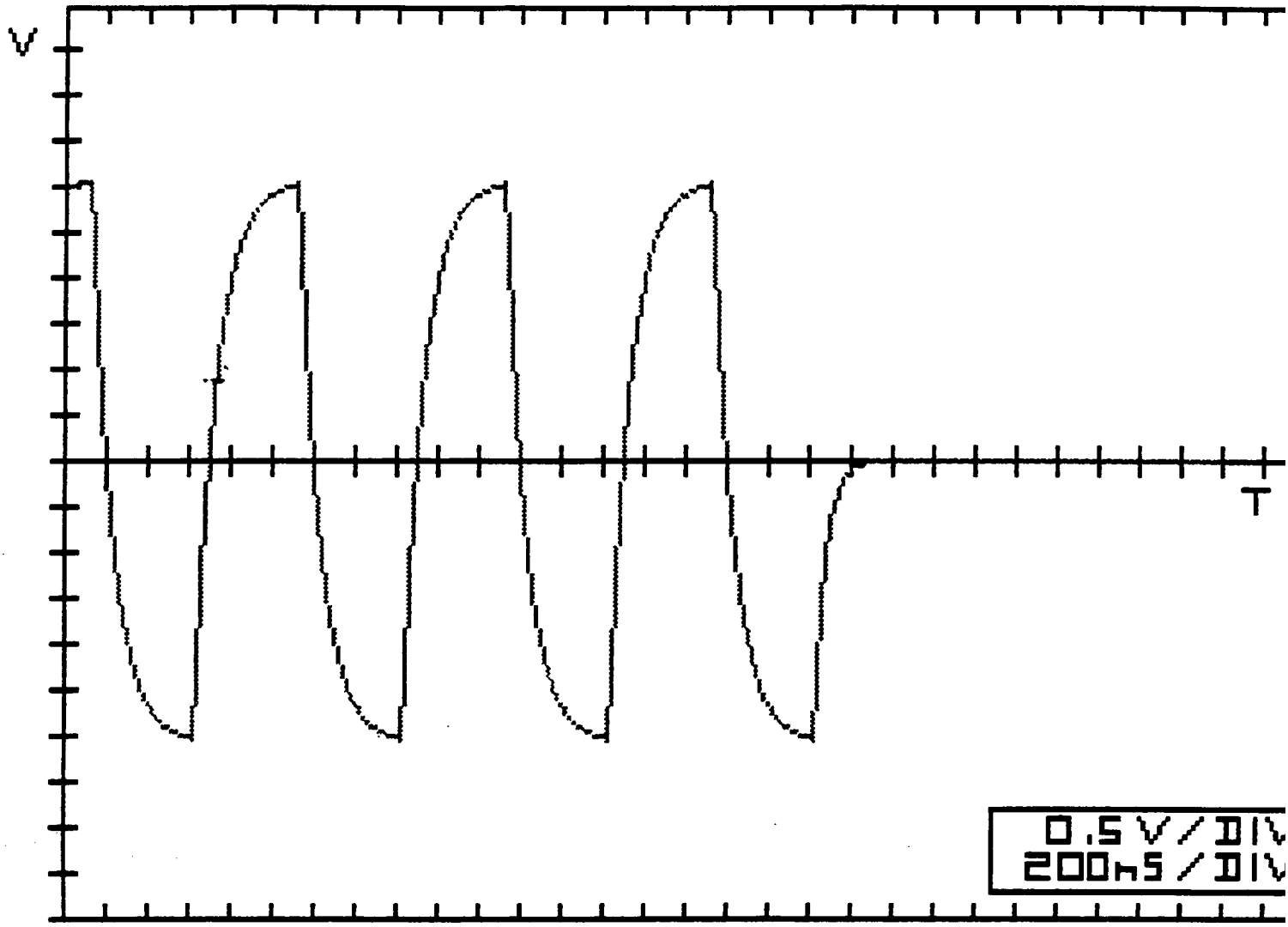

10.6 Bus Waveform at CERES-AFT, No Fault

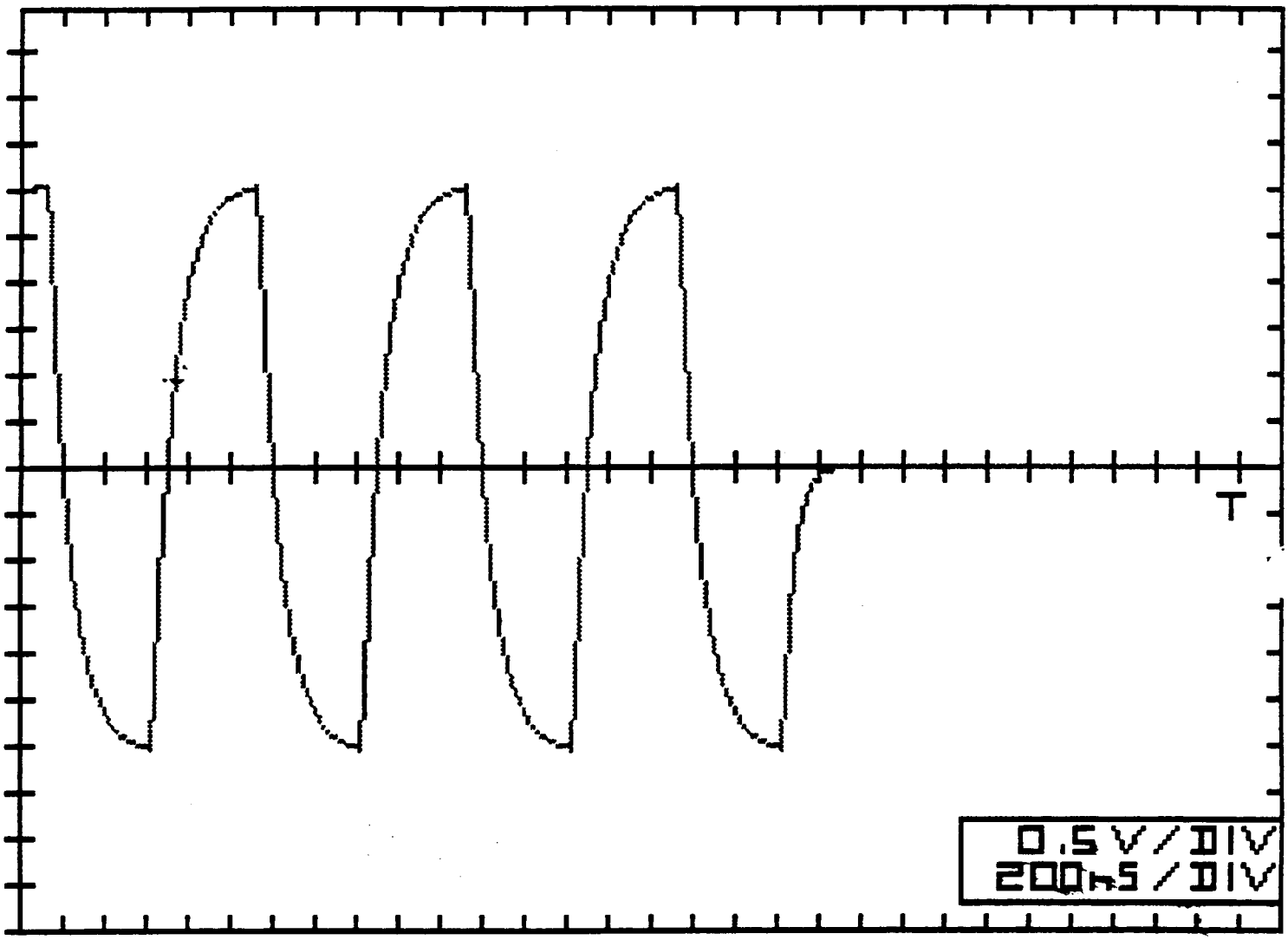

10.7 Bus Waveform at TEST PORT, No Fault

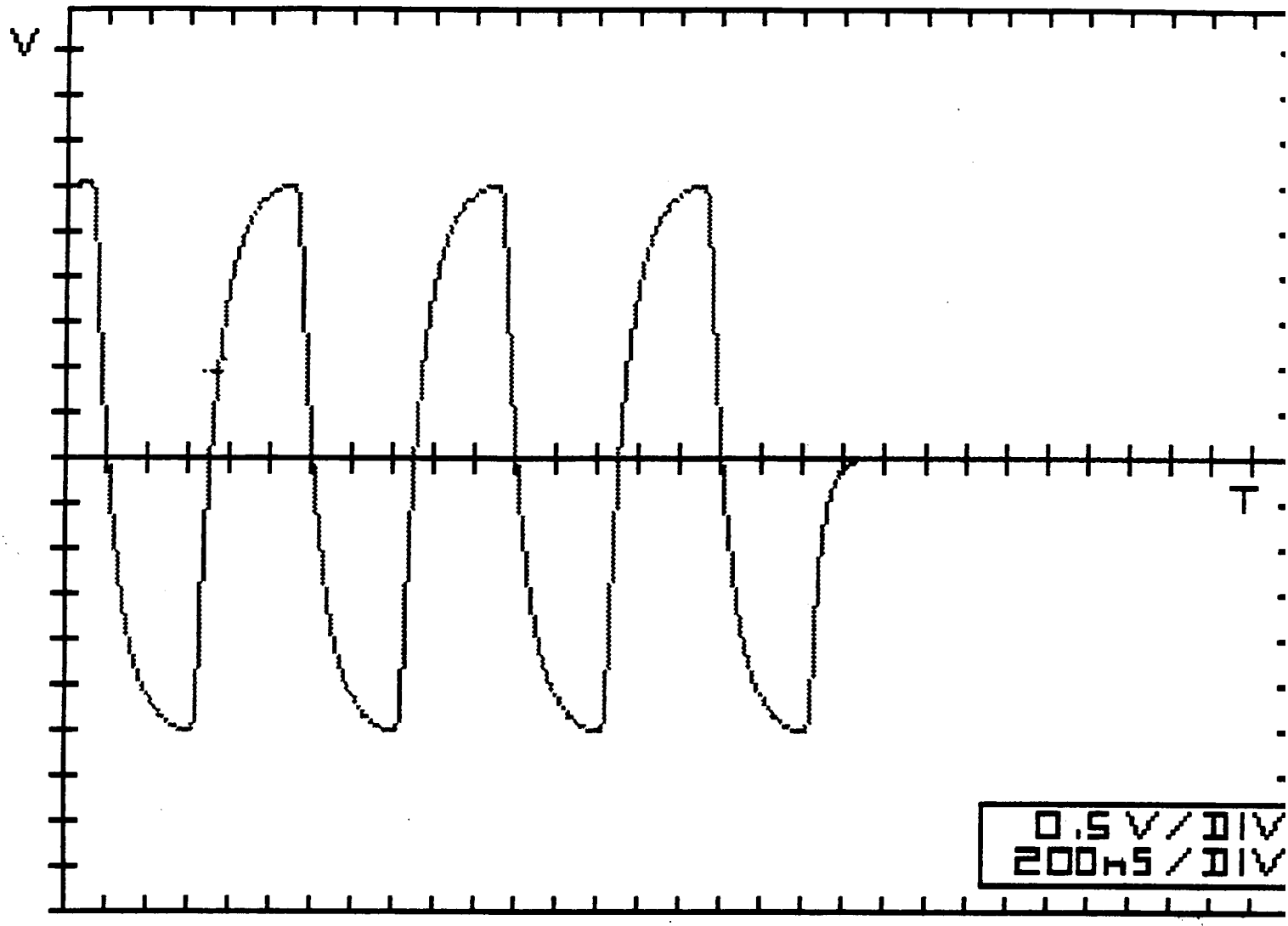

10.8 Bus Waveform at TEST PORT, Fault at CTIU-1

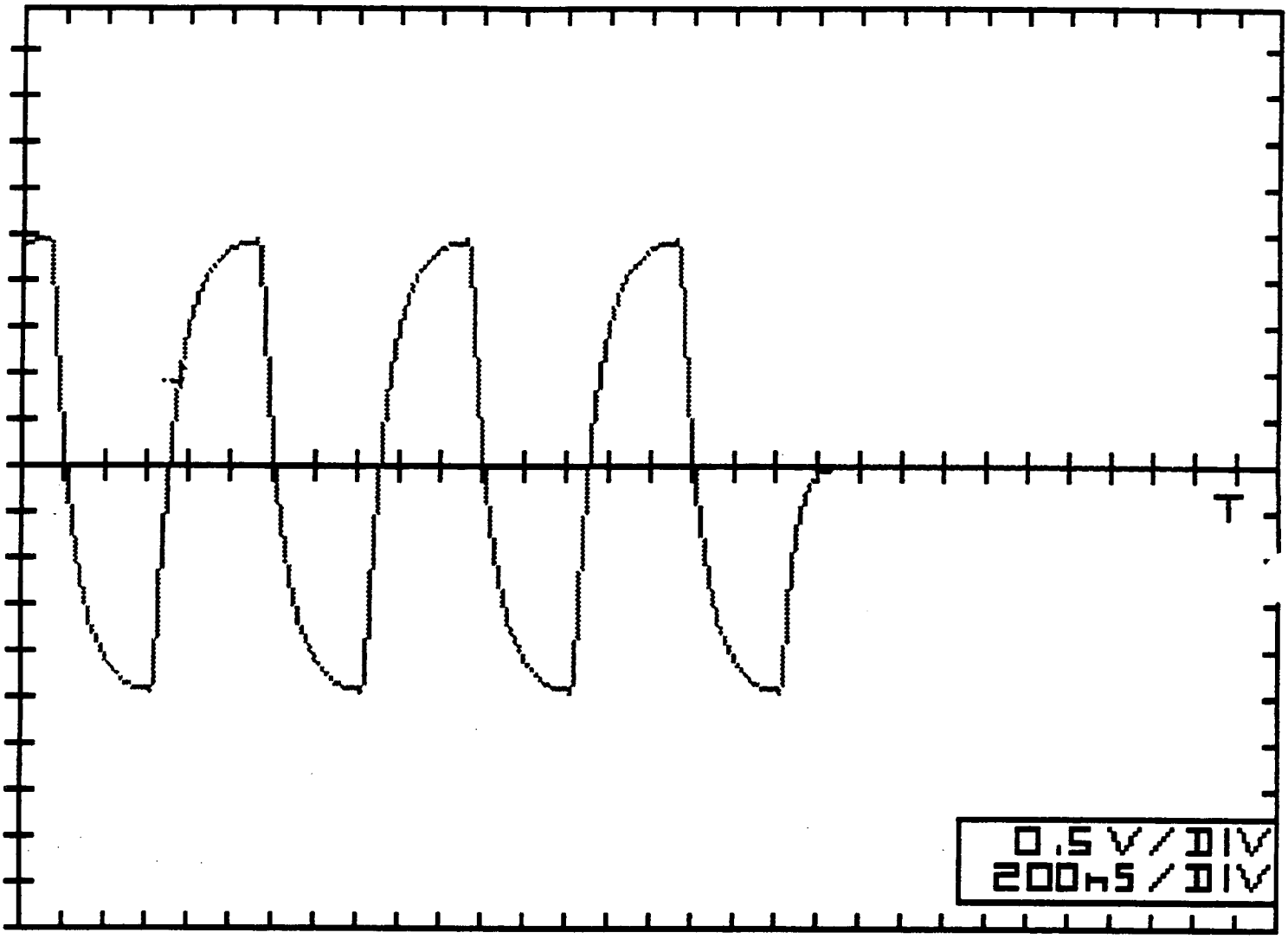

10.9 Bus Waveform at CTIU-1, Fault at TEST PORT

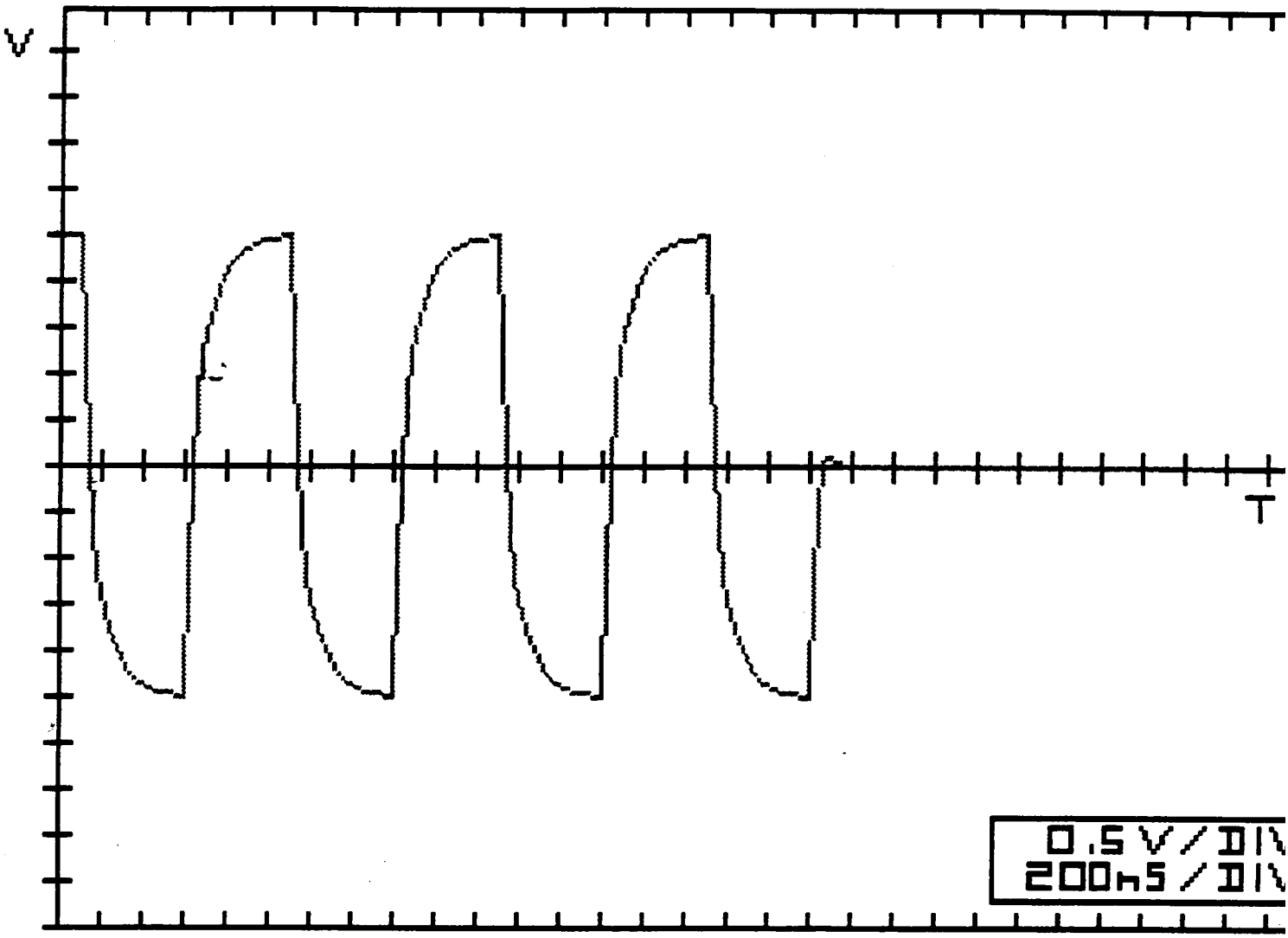

MARTIN MARIETTA
ASTRO SPACE

EOS–DN–C&DHS–048

DESIGN NOTE

TITLE: Command And Telemetry Bus Utilization Table

AUTHOR: D. Higgins 8/30/93

AUTHOR'S MANAGER: M. Rogan **DATE** ~~8/27/93~~ 8/30/93

SE&I MANAGER: Scott P. Carey **DATE** 8/30/93

CHIEF ENGINEER: D. Longuoy **DATE** 8/30/93

REVISIONS

LETTER	DESCRIPTION	DATE	AUTHOR
–	Initial Release	8/30/93	DMH

MARTIN MARIETTA
ASTRO SPACE

DESIGN NOTE SUMMARY

DN#: EOS–DN–C&DH–048 **Revision:** _____ **Date:** 8/27/93

Title: Command and Telemetry Bus Utilization Table

Author: D. Higgins **Source ID (ESTA, PD, Memo, etc.):** _____

Purpose/Questions Answered:

The allocation and distribution of messages on the Command and Telemetry bus is provided. The messages incorporated information for command and telemetry as baselined for the spacecraft PDR.

Summary/Answers:

The allocations were made and significant margin exists for modifications through the design phase.

Recommendations: (Be Specific)	Accepted	Rejected	Baselined	Date

Open Items/Action Required	Responsible Person	Due Date

Comments

Form Completed By D. Higgins **Date** 8/27/93 **Page** ___ **of** ___

EOS Form 007–02/01/93

TABLE OF CONTENTS

SECTION / PARAGRAPH	TITLE	PAGE
1	INTRODUCTION	1
1.1	Summary	1
1.2	Issues	1
1.3	Command and Telemetry Bus Operations	1
2	SOURCES	4
3	CONSTRAINTS	5
3.1	Guidance Navigation & Control (GN&C) Attitude Control	5
3.2	BDU Commands	5
3.3	PROM and RAM Utilization	5
3.4	Miscellaneous Message Placement	5
4	BUS UTILIZATION TABLE	6
4.1	Bus Utilization Table Description	6
5	BDU OPERATIONS	42
5.1	BDU Sample Schedule Tables	42
5.4	Relationships Between Rate and Distribution of Sampled Data	45
5.5	Inefficiencies	45
5.5.1	BDU Sampling	46
5.5.2	Sample/Gather 1553 Messages and Message Length in Words	46
6	CONCLUSIONS	48
7	FOLLOW–ON	49
APPENDIX I	BDU SAMPLE SCHEDULE TABLES	50

LIST OF FIGURES

FIGURE	TITLE	PAGE
Figure 1.	Command and Telemetry Bus Cycles	2

LIST OF TABLES

TABLE	TITLE	PAGE
Table I.	Minor Cycle Tasks and Frequency of Occurrence	3
Table II.	BUT Table Column Headings and Description	6
Table III.	BUT Table Notations	9
Table IV.	Bus Utilization Table	12
Table V.	C&T Remote Terminal Address Assignment	40
Table VI.	GN&C BDU Sample Schedule Table 2.2.7	42
Table VII.	Data Characteristics of GN&C BDU Sample Schedule Table 2.2.7	42
Table VIII.	Data Characteristics of COMS/CDH BDU Sample Schedule Table 7.2.5	43
Table IX.	Data Characteristics of COMS/CDH BDU Sample Schedule Table 7.2.6	43
Table X.	Data Characteristics of Power BDU Sample Schedule Table 3.2.1	44
Table XI.	Data Characteristics of COM/CDH BDU Sample Schedule Table 7.2.7	44
Table XII.	Rate and Distribution	45
Table XIII.	Inefficiencies	45
Table XIV.	Number of 1553B Messages and Data Words	46
Table XV.	Subcom Rates	48

1 INTRODUCTION

The Command and Telemetry Bus Utilization Table design note describes the allocation of the messages on the Command and Telemetry (C&T) bus on the EOS–AM Spacecraft. The requirements for the messages were derived from several sources and incorporated based on the capabilities and constraints of the bus.

This design note cites the relevant sources for the creation of the table, describes the constraints on the allocation, documents the current allocations, and identifies the follow–on work that will be required.

1.1 Summary

All known, periodic messages have allocated on the C&T bus with a low overall utilization of 31% of the telemetry gathering capability. The command cells available to the Flight Software System have 24 cells allocated out of 192. This leaves 168 command cells available for other types of commands generated by the flight software. The C&T bus has the margin to accommodate any changes as the spacecraft design progresses.

1.2 Issues

At one time, the Electrical Power Subsystem used a 0.032 second sample rate for sampling the solar array currents, the equipment module currents, and the instrument currents. This is no longer needed because the expected transients, as measured, occur over a significantly longer period of time. The design will be revisited to assess the need of the sampling rate and the measurement location. The impact of providing the higher sample rate is to redo the table and move some of the samples used in spacecraft closed–loop control.

If Health and Safety (H&S) downlink bandwidth is oversubscribed, an additional sampling rate may be required. H&S is only used by ground control during contingency operations. The H&S telemetry is gathered over a 2.048 second period and placed in a single packet for downlink. This means a 1.024 second sample rate for a specific telemetry point appears twice as often as needed. The impact would be a reduction in the number of tables allocated to the 1.024 second sample rate and additional processing.

1.3 Command and Telemetry Bus Operations

The bus utilization table is contained within Command and Telemetry Interface Unit (CTIU) which is the Bus Controller (BC) of the MIL–STD–1553B Command and Telemetry (C&T) bus. The bus utilization table is the mechanism the Command and Data Handling Subsystem (C&DHS) uses to satisfy a C&DHS requirement to provide services which exhibit deterministically bounded timing performance in support of real-time operations. Although not expected to be, the bus utilization table is modifiable on orbit.

Figure 1 shows the C&T bus cycles. The following describes components of the bus cycles with the components high–lighted:

Implies order within a minor cycle

1 Major Cycle

Minor Cycle Number	Type #1	Type #2		Type #3		Type #4		type #5	Reserve Bus Utilization
0	1	2	2	3	3	4	4	6	>50%
1	1	2	2	3	3	4	5	6	
2	1	2	2	3	3	4	4	6	
3	1	2	2	9	—	4	4	6	
4	1	2	2	3	3	4	4	6	
5	1	2	2	3	3	4	4	6	
. . .	. . .	. . .	. . .	. . .	. . .	. . .	. . .	. . .	
32	1	2	2	3	3	4	4	7	
33	1	2	2	3	3	4	5	7	
. . .	. . .	. . .	. . .	. . .	. . .	. . .	. . .	. . .	
64	1	2	2	3	3	4	4	8	
65	1	2	2	3	3	4	4	8	
. . .	. . .	. . .	. . .	. . .	. . .	. . .	. . .	. . .	
96	1	2	2	3	3	4	4		
97	1	2	2	3	3	4	4		
. . .	. . .	. . .	. . .	. . .	. . .	. . .	. . .		
126	1	2	2	3	3	4	4		
127	1	2	2	9	—	4	4		

1. Synchronize with Data Word. One issued per minor cycle to an individual remote terminal. Each remote terminal receives 4 per major cycle.
2. BDU sample schedule.
3. All onboard issued commands (stored commands, FDIR, closed loop). In 4 minor cycles, 1–3 can contain up to 2 onboard commands while the 4th minor can contain only 1 ground controller command
4. Gathering request for H&S telemetry, H/K telemetry and SCC closed loop data.
5. Diagnostic – Memory Dump. Minimum interval between gathers is 6 minor cycles. Note: A C&T bus loop back will use this task type upon command to the CTIU as long as there is no on–going memory dump.
6. IMOK message.
7. Ancillary Data.
8. Time Code.
9. Ground Controller Commanding: 1 command every 4 minor cycles

Figure 1. Command and Telemetry Bus Cycles

a. A **minor cycle task list** is a set of data transfers (**minor cycle tasks**) scheduled to begin and be completed within a **minor cycle** (minor cycle = 8 milliseconds ±100 microseconds, allocated time to complete minor cycle task list worst case is 7.2 milliseconds). Once the BC completes the transmission of all tasks in the minor cycle list, the CTIU waits until the beginning of the next minor cycle to initiate the next minor

cycle task list. The time allotted to each task allows for a possible single re–transmission of the task. The CTIU monitors and reports if the minor cycle task list was not completed within the minor cycle.

b. Message "types" are categories of **minor cycle tasks** transmitted by the BC. There are 5 types. As shown in Figure 1, type 1 is for **synchronization with data word** but not every minor cycle task list will contain this specific message. Type 2 allows for 2 tasks of the same type—a BDU sample schedule table. If both messages of the same type are present, they must be sent to different RT addresses (the same subaddress assignment causes one message to overwrite the prior message before either message was further processed). Type 3 allows for 2 on–board commands within the same minor cycle or one ground command.

c. A **minor cycle task list** is uniquely identified by the **major** and **minor cycles** in which it is transmitted by the BC. A specific minor cycle task list is repeated once per **master cycle.**

Table I describes the frequency of occurrence of a minor cycle task within a message type.

Table I. Minor Cycle Tasks and Frequency of Occurrence

Message Type Number	Minor Cycle Tasks	Number of transactions allowed within a minor cycle for this type of task
1	Synchronize with data word	0 or 1
2	Bus Data Unit (BDU) sample schedule table	0, 1, or 2
3	Command: only one of the following types of task in any minor cycle task list	
	On–board commands every 3 out of 4 minor cycles	0, 1 or 2
	uplink command data transfer 1 out of 4 minor cycles	0 or 1
4	data gathering request: only one of the following type of tasks in any minor cycle task list	
	no sooner than every sixth minor cycle: dump gather request telemetry gather request	 0 or 1 0 or 1
	all other minor cycles: telemetry gather request	0, 1 or 2
5	Miscellaneous: only one of the following types of tasks in any minor cycle task list: ref. paragraph 6.1.2.4.6 of the GIIS, GSFC 420–03–02	
	Ancillary data packet	0 or 1
	Time Code Message	
	Spacecraft Controls Computer (SCC) OK/IMOK message	
	C&DHS Safe Mode Commands	

2 SOURCES

The sources for requirements for the design note at this time are based on the design maturity of the spacecraft at the start of the task. These include preliminary estimates of housekeeping telemetry requirements, closed–loop command and telemetry for attitude control, the various specifications for subsystems and components, and design notes. Discussions with the individual engineers for working out subtleties was essential for a comprehensive assessment of the component interface requirements. Although the sources are many for the information, some of the most influential are given here.

EOS–DN–RES–027 Rev E 7/23/93	EOS AM Spacecraft Command and Telemetry Budget Allocations and Estimates
EOS–DN–GN&C–039 Rev A 7/13/93	GN&C Interface Timing
PS20008567 28 June 1993	Performance Specification, Command and Data Handling Subsystem for the EOS AM Spacecraft

3 CONSTRAINTS

The knowledge of the constraints on the allocation of the command, telemetry, and other types of messages on the bus are essential in making a table that not only has everything allocated, but will work correctly on the spacecraft.

3.1 Guidance Navigation & Control (GN&C) Attitude Control

Foremost in the allocation of the commands and telemetry on the spacecraft was the requirements for accurate knowledge of command execution and telemetry gathering related to GN&C attitude control. Therefore, this design note addresses the closed–loop commanding by GN&C, but not some other types. The other types include absolute time stored commands, relative time sequence commands, and Fault Detection Isolation and Recovery (FDIR) commands. These commands will be issued by the flight software in the SCC on a non–interference basis with the closed–loop control commands.

3.2 BDU Commands

A BDU can execute only one command per minor cycle. This restriction was basic to the allocation of closed–loop commanding. This design note does not need to assess the relay drive command rate restriction as it is not a part of the closed–loop commanding and therefore, not in the scope of this document.

3.3 PROM and RAM Utilization

The sampling of the telemetry is performed to have a minimum impact on the size of the Programmable Read Only Memory (PROM) and Random Access Memory (RAM) in the CTIU that will hold the tables. The result was uniformed spacing of the sampling rather than a haphazard allocation.

3.4 Miscellaneous Message Placement

There are several messages which must be placed on the bus other than commands and telemetry. These messages include the time code message, ancillary data message, and IMOK message.

4 BUS UTILIZATION TABLE

The tables on the following pages represent the current traffic allocations on the C&T bus. The tables are described for a major cycle. The messages which repeat every major cycle has a message position dedicated in every major cycle. The messages which are subcommutated at a lower rate than the major cycle, e.g., 8.192 seconds, is shown with the major cycle that the individual transactions are made in parenthesis.

The table has a liberal amount of notes embedded in order to impart the information which was necessary to complete the table.

The samples that are less than 1.024 seconds are all for the SCC–closed–loop control on the spacecraft. Those at that rate or slower are for housekeeping (H/K) and health & safety (H&S). There are some samples at the lower rate which are used for closed–loop control, e.g., power, but were not required to be given specific sample messages. The quantity of H/K samples are sufficient for those points to perform closed–loop control.

The table also contains the number of spare samples available by actual allocation to specific locations in the bus.

4.1 Bus Utilization Table Description

Table II. BUT Table Column Headings and Description

Minor Cycle	Type #1 Synchro-nize with Data Word	Type #2 BDU Sample Sched-ule Table		Type #3 Command Distribu-tion		Type #4 Data Gathering Re-quest		Type #5 OTHER
		#1	#2	#1	#2	#1	#2	

Minor Cycle	Number of Minor Cycle within a Master Cycle. A Minor cycle is 8 msec. A major cycle contains 128 minor cycles (1.024 seconds). A master cycle is 64 major cycles (65.536 seconds). A row in bus utilization table represents a minor cycle task list. A column represents a minor cycle task.
Type #1 Synchronize with data word	Type 1 task: Purpose: permits the C&T RTs to maintain cycle synchronization with the Active CTIU.

Type #2 BDU sample schedule table	Type 2 task: A BDU sample schedule tables contains from 1 up to 16 BDU telemetry control words. The BDU samples the data in the same minor cycle it receives the BDU sample schedule table. The Active CTIU transmits the BDU sample schedule table to the specified RT per the bus utilization table. The algorithm used by the CTIU imposes the rule the BDU telemetry will be gathered in Minor Cycle N+1 where the BDU sample schedule table is issued in Minor Cycle N. ONLY BDU sample schedule tables appear in the two columns under TYPE 2. Both the embedded RT and BDU telemetry gather transmittals appear in the TYPE 4 columns. If 2 BDU sample schedule tables are issued in the minor cycle, then each must be to different RT addresses.
Type #3 Command Distribution	Type 3 task: The ground command task is used only during a contact time and then only by a command data transfer received via the uplink. Ground command task is allowed once every fourth minor cycle. The maximum length for a ground command data transfer on the C&T bus is 33 16–bit data words (a 1553B message header plus 32 16–bit data words). There are 3 contiguous minor cycles out of 4 which are reserved for the active SCC's issuing of commands. GN&C has reserved certain of these cells for its needs. Each such command is identified by GN&C nomenclature and at a frequency. The SCC has to have apriori knowledge when ground and onboard commands occur since that is it command data flow control rate. The ATC and RTCS commands have a 1553B message header with 1 up to 2 16–bit data words permitted. SCC can issue commands for the BDU point–to–point serial interfaces. These commands have a 1553B message header, a BDU command control data word and from 1 up to 6 16–bit data words to transmitted by the BDU via the serial interface. This is the maximum sized command permitted to be issued via the SCC. If 2 onboard commands are issued in the minor cycle, then each must be to different RT addresses.

Type #4 Command Distribution	Type 4 task: Purpose: Telemetry Gathering tasks are identified as well as the distribution (H/K only, H&S only, both) associated with each gather. A gather request may be for memory dump data, SCC closed loop, H/K S–band telemetry or H&S S–band telemetry. The BDUs are identified by name such as GN&C, RWA, PWR, COMS/CDH, DAS, etc. The table identifier indicates if it is for SCC closed loop or S–band telemetry. The reader may reference the BDU Working Notes in the Appendix. A particular table may be found by (1) the BDU then (2) the table number. The telemetry gather requests causes the RT to return sampled data. If a telemetry gather was issued in Minor Cycle N, the active CTIU then distributes the sampled data on the next minor cycle (N+1) in accordance with directives contained in the BUT. For example, the directive may specify that 7 times out of 8 telemtry gathers may be H/K datastream only while the other telmetry gather is for both H/K and H&S datastream.
Type #5 Other	Type 5 Task IMOK MESSAGES • SCC sends SCC OK command data transfer via serial I/O. • SCC needs to deliver SCC OK to active CTIU 3 minor cycles in advance of first IMOK message being delivered • SCC needs to deliver SCC OK after Major cycle event occurred since it is part of health check. • IMOK messages are sent to all embedded C&T RTs if and only if the active CTIU receives the SCC OK when expected. Some embedded C&T RTs, like the HGA, will accept but not process the message. ANCILLARY DATA • SCC sends Ancillary data command data transfer via Serial I/O. • SCC needs to deliver Ancillary Data to active CTIU 3 minor cycles in advance of first Ancillary data message being delivered via C&T bus • Active CTIU replicates Ancillary data and distributes it as individual 1553B messages to designated recipients (Instruments). TIME CODE MESSAGES • Active CTIU shall generate and deliver the time code messages. Soonest delivery can begin is minor cycle 13. Lastest possible delivery is minor cycle is 114. • SCCs, CTIUs, Instruments receive time code messages.

Table III. BUT Table Notations

Type #3 Command Distribution [2,3]	See Footnotes [2, 3] at end of table for more information.
@.128 GN&C 2.1.1 IRU ΣΔΦ pulses[15]	@.128 Every 128 millisecond sample rate sampling rates are .064 (16 times per major cycle), .128 (8 times per major cycle), .512 (2 times per major cycle), 1.024 (once per 1.024 seconds—every major cycle), 8.192 (once per 8.192 seconds—every 8 major cycles), 65.536 (once per 65.536 seconds—every 64 major cycles or once per master cycle) GN&C 2.1.1 GN&C BDU Sample Schedule Table 2.1.1 This is an SCC closed looped stream since the second–level header is a 1. If it were 2.2.1, then it would be either or both the S–band downlink telemetry data streams. The table identifier indicates if it is for SCC closed loop or S–band telemetry. The reader may reference the BDU Working Notes in the Appendix. A particular table may be found by (1) the BDU then (2) the table number. IRU ΣΔΦ pulses[15] Type of data and this footnote indicates the source is from the DN–GN&C–039 NOTE: This data will appear in TYPE 2 (BDU sample schedule table) columns in Minor cycle N. In Minor cycle N+1 the same data will appear in TYPE 4 (telemetry gather) columns.

@8.192 ——————— GN&C 2.2.2,(0) [ACE A,B tlm synch [14,15] (4.096)] ——————— GN&C 2.2.1 (1) ——SPARE——(2) ——SPARE——(3) ——————— GN&C 2.2.3 (4) [ACE A,B tlm synch [14,15] (4.096)] ——————— GN&C 2.2.8 (5) ——SPARE——(6) ——SPARE——(7)	@8.192 This table CELL represents 8 (0–7) unique potential sample and gather transactions at 8.192 seconds. The 0–7 represents which major cycle the first sample/gather transaction occurs begins. Only 0, 1, 4 and 5 have been assigned. The "———" is used to identify the beginning of an assigned sample and gather operation. Again, the usage says start on the major cycle beginning with this value and every eight times thereafter perform the specified sample/gather transaction. If 0 is assigned, then the sample/gather operation will be done on major cycles 0, 8, 16, 24, 32, 40, 48, 56.
	——————— GN&C 2.2.2,(0) [ACE A,B tlm synch [14,15] (4.096)] The "———" is used to identify the beginning of an assigned sample and gather operation. This is GN&C BDU sample schedule table 2.2.2. It will be sent to the GN&C BDU every 8.192 seconds in minor cycle N. The sampled telemetry will be gathered in minor cycle N+1. This sampling will be done on major cycles 0, 8, 16, 24, 32, 40, 48, 56. Footnotes 14,15 are referenced.
	——————— GN&C 2.2.1 (1) This is GN&C BDU sample schedule table 2.2.1. It will be sent to the GN&C BDU every 8.192 seconds in minor cycle N. The sampled telemetry will be gathered in minor cycle N+1. This sampling will be done on major cycles 1, 9, 17, 25, 33, 41, 49, 57
	——SPARE——(2) Nothing is currently assigned to this CELL for major cycles 2, 10, 18, 26, 34, 42, 50, 58.
@1.024 Memory Dump 1	This CELL is assigned to memory dump operations which are asynchronous events. Memory dumps only occur during contact time. There are 21 such CELLS in a major cycle. This supports the maximum downlink rate without exceeding it. The minimum dump rate is once per major cycle.

——————, ——————(0)	Used in the TYPE 2 (BDU sample schedule tasks) only. This means a BDU sample schedule table cannot be transmitted here since the next minor cycle (minor cycle N+1) is used to gather data from an embedded RT. Only BDUs need BDU sample schedule table.
	——————(0) used for 8.192 and 65.536 sample cells to indicate this cell with this major cycle has an embedded RT telemetry gather which precludes it from being assigned to a BDU sample schedule table.
@.512 **SPARE**	This is a **SPARE** CELL whose sampling rate is .512. A single sample/gather operation requires at this rate requires 2 CELLS 64 minor cycles apart within a major cycle and each major cycle performs the same sample/gather operation for these 2 CELLS.

Table IV. Bus Utilization Table

Minor Cycle	Type #1 Synchro-nize with Data Word[1]	Type #2 BDU Sample Schedule Table		Type #3 Command Distribution [2,3]		Type #4 Data Gathering Request		Type #5 OTHER
		#1	#2	#1	#2	#1	#2	
0		@.128 GN&C 2.1.1 IRU ΣΔΦ pulses[15]	@1.024 PROP 5.2.7 PMEA 1,2 thrust-er control status sync[15]	Ground Command[2]		@8.192 GN&C 2.2.2,(0) [ACE A,B tlm synch [14,15 (4.096)] GN&C 2.2.1 (1) —SPARE—(2) —SPARE—(3) GN&C 2.2.3 (4) [ACE A,B tlm synch [14,15 (4.096)] GN&C 2.2.8 (5) —SPARE—(6) —SPARE—(7)	@1.024 Memory Dump 1	
1	CTIU–1	@.512 GN&C 2.1.4 Tach Pulses[15]	@.512 PWR 3.1.1 FSS sun angles & presence[15]	@1.024 Doppler Frequen-cy prediction to XPNDR1[15]		@.128 GN&C 2.1.1 IRU ΣΔΦ pulses[15]	@1.024 PROP 5.2.7 PMEA 1,2 thrust-er control status sync[15]	
2	CTIU–2	@.128 GN&C 2.1.2 IRU ΣΔΦ pulses[15]	@.512 DAS 6.1.1 EAS 1,2 E&H Err[15]	@1.024 Doppler Frequenct\y predic-tion to XPNDR2[15]		@.512 GN&C 2.1.4 Tach Pulses[15]	@.512 PWR 3.1.1 FSS sun angles & presence[15]	

Minor Cycle	Type #1 Synchro-nize with Data Word[1]	Type #2 BDU Sample Schedule Table		Type #3 Command Distribution [2,3]		Type #4 Data Gathering Request		Type #5 OTHER
		#1	#2	#1	#2	#1	#2	
3	SCC-1	@.128 GN&C 2.1.3 IRU **ΣΔΦ** pulses[15]	@8.192 COMS/CDH 7.2.1(0) Synch B1,B2[16] **—SPARE—(1)** **—SPARE—(2)** COMS/CDH 7.2.4(3) COMS/CDH 7.2.5(4) COMS/CDH 7.2.6(5) PROP 5.2.8 (6) **—SPARE—(6)** **—SPARE—(7)**	@.512 GN&C BDU Mag torque drive cmds ACE A [15]	@ .512 ADE A drive CMDS [15]	@.128 GN&C 2.1.2 IRU **ΣΔΦ** pulses[15]	@.512 DAS 6.1.1 EAS 1,2 E&H Err[15]	

Minor Cycle	Type #1 Synchro-nize with Data Word[1]	Type #2 BDU Sample Schedule Table		Type #3 Command Distribution [2,3]		Type #4 Data Gathering Request		Type #5 OTHER
		#1	#2	#1	#2	#1	#2	
4	SCC–2	==========	==========	Ground Command		@.128 GN&C 2.1.3 IRU ΣΔΦ pulses[15]	@8.192 COMS/CDH 7.2.1(0) Synch B1,B2[16] **—SPARE—(1)** **—SPARE—(2)** COMS/CDH 7.2.4(3) COMS/CDH 7.2.5(4) COMS/CDH 7.2,6(5) PROP 5.2.8 (6) **—SPARE—(6)** **—SPARE—(7)**	

Minor Cycle	Type #1 Synchro-nize with Data Word[1]	Type #2 BDU Sample Schedule Table		Type #3 Command Distribution [2,3]		Type #4 Data Gathering Request		Type #5 OTHER
		#1	#2	#1	#2	#1	#2	
5	SSST–1	@8.192 COMS/CDH 7.2.10(0) part 1 of 2 Frame B1,B2[15,16] GN&C 2.2.9.1(1) [17] COMS/CDH 7.2.2(2) **—SPARE—(3)** **—SPARE—(4)** **—SPARE—(5)** **—SPARE—(6)** **—SPARE—(7)**	==========	@.512 GN&C BDU Mag torque drive cmds ACE B [15]	@.512 ADE B drive CMDS [15]	@ .064 HGA–1 Gimbal angles[15]	@ .064 HGA–2 Gimbal angles[15]	

Minor Cycle	Type #1 Synchro-nize with Data Word[1]	Type #2 BDU Sample Schedule Table		Type #3 Command Distribution [2,3]		Type #4 Data Gathering Request		Type #5 OTHER
		#1	#2	#1	#2	#1	#2	
6	SSST-2	@8.192 COMS/CDH 7.2.11 (0) part 2 of 2 Frame B1,B2[15,16] GN&C 2.2.9.2(1) [17] —SPARE—(2) —SPARE—(3) —SPARE—(4) —SPARE—(5) —SPARE—(6) COMS/CDH 7.2.3(7)	@65.536 =======(0) —SPARE—(1) • • • —SPARE—(63)	@1.024 GN&C BDU SCC OK pulse to ACE A [15]		@8.192 COMS/CDH 7.2.10(0) part 1 of 2 Frame B1,B2[15,16] GN&C 2.2.9.1(1) [17] –COMS/CDH 7.2.2(2) —SPARE—(3) —SPARE—(4) —SPARE—(5) —SPARE—(6) —SPARE—(7)	@1.024 Memory Dump 2	

Minor Cycle	Type #1 Synchro-nize with Data Word[1]	Type #2 BDU Sample Schedule Table		Type #3 Command Distribution [2,3]		Type #4 Data Gathering Request		Type #5 OTHER
		#1	#2	#1	#2	#1	#2	
7	HGA-1	@1.024 COMS/CDH 7.2.7 tlm synch for part 1 of 3 Frame A1, A2[15,16]	@8.192 **—SPARE—(0)** GN&C 2.2.9.3(1) [17] **—SPARE—(2)** **—SPARE—(3)** **—SPARE—(4)** **—SPARE—(5)** **—SPARE—(6)** **—SPARE—(7)**	@1.024 GN&C BDU SCC OK pulse to ACE B [15]		@8.192 COMS/CDH 7.2.11 (0) part 2 of 2 Frame B1,B2[15,16] GN&C 2.2.9.2(1) [17] **—SPARE—(2)** **—SPARE—(3)** **—SPARE—(4)** **—SPARE—(5)** **—SPARE—(6)** COMS/CDH 7.2.3(7)	@65.536 ACTIVE CTIU 1/64 tlm with Doppler Sample mark measure-ment[15] (0) **—SPARE—(1)** • • • **—SPARE—(63)**	

Minor Cycle	Type #1 Synchro-nize with Data Word[1]	Type #2 BDU Sample Schedule Table		Type #3 Command Distribution [2,3]		Type #4 Data Gathering Request		Type #5 OTHER
		#1	#2	#1	#2	#1	#2	
8	HGA–2	@8.192 COMS/CDH 7.2.8(0) part 2 of 3 Frame A1,A2 [15,] GN&C 2.2.9.4(1) [17] **—SPARE—(2)** **—SPARE—(3)** REC 11.2.2 (4) REC 11.2.4 (5) REC 11.2.6 (6) **—SPARE—(7)**	@.512 **SPARE**	Ground Command		@1.024 COMS/CDH 7.2.7 tlm synch for part 1 of 3 Frame A1, A2[15,16]	@8.192 **—SPARE—(0)** GN&C 2.2.9.3(1) [17] **—SPARE—(2)** **—SPARE—(3)** **—SPARE—(4)** **—SPARE—(5)** **—SPARE—(6)** **—SPARE—(7)**	

Minor Cycle	Type #1 Synchro-nize with Data Word[1]	Type #2 BDU Sample Schedule Table		Type #3 Command Distribution [2,3]		Type #4 Data Gathering Request		Type #5 OTHER
		#1	#2	#1	#2	#1	#2	
9	CERES-FORE	@8.192 COMS/CDH 7.2.9(0) part 3 of 3 Frame A1, A2 [15] GN&C 2.2.9.5(1) [17] **—SPARE—(2)** REC 11.2.1 (3) REC 11.2.3 (4) REC 11.2.5 (5) REC 11.2.7 (6) **—SPARE—(7)**	**@.512 SPARE**			@8.192 COMS/CDH 7.2.8(0) part 2 of 3 Frame A1,A2 [15,] GN&C 2.2.9.4(1) [17] **—SPARE—(2)** **—SPARE—(3)** REC 11.2.2 (4) REC 11.2.4 (5) REC 11.2.6 (6) **—SPARE—(7)**	**@.512 SPARE**	

Minor Cycle	Type #1 Synchro-nize with Data Word[1]	Type #2 BDU Sample Schedule Table		Type #3 Command Distribution [2,3]		Type #4 Data Gathering Request		Type #5 OTHER
		#1	#2	#1	#2	#1	#2	
10	CERES–AFT	@.512 COMS/CDH 7.1.1 ADE A,B array rotation[15]	@1.024 **SPARE**			@8.192 –COMS/CDH 7.2.9(0) part 3 of 3 Frame A1, A2 [15] –GN&C 2.2.9.5(1) [17] **—SPARE—(2)** –REC 11.2.1 (3) –REC 11.2.3 (4) –REC 11.2.5 (5) –REC 11.2.7 (6) **—SPARE—(7)**	@.512 **SPARE**	
11	MOPITT	==========	==========			@.512 COMS/CDH 7.1.1 ADE A,B array rotation[15]	@1.024 **SPARE**	
12	MODIS	==========	==========	Ground Command		@1.024 Memory Dump 3	@1.024 MODIS H&S[12]	
13	ASTER	@.512 **SPARE**	==========			*@.064* *HGA–1 Gimbal angles*[15]	*@.064* *HGA–2 Gimbal angles*[15]	

Minor Cycle	Type #1 Synchro-nize with Data Word[1]	Type #2 BDU Sample Schedule Table		Type #3 Command Distribution [2,3]		Type #4 Data Gathering Request		Type #5 OTHER
		#1	#2	#1	#2	#1	#2	
14	MISR	@.128 **SPARE**	==========			@.512 **SPARE**	@1.024 SCC–1 H/K	
15	BDU PROP	@.128 **SPARE**	@.128 **SPARE**			@.128 **SPARE**	@1.024 SCC–2 H/K	
16	BDU COMS/ C&DHS	*@.128 GN&C 2.1.1 IRU ΣΔΦ pulses*[15]	@1.024 **SPARE**	Ground Command		@.128 **SPARE**	@.128 **SPARE**	
17	BDU–Recorder	----------	----------			*@.128 GN&C 2.1.1 IRU ΣΔΦ pulses*[15]	@1.024 **SPARE**	
18	BDU–GN&C	*@.128 GN&C 2.1.2 IRU ΣΔΦ pulses*[15]	@1.024 **SPARE**			@1.024 Memory Dump 4	@1.024 MOPITT H&S[12]	
19	BDU–Power	*@.128 GN&C 2.1.3 IRU ΣΔΦ pulses*[15]	@1.024 **SPARE**			*@.128 GN&C 2.1.2 IRU ΣΔΦ pulses*[15]	@1.024 **SPARE**	
20	BDU–DAS	----------	----------	Ground Command		*@.128 GN&C 2.1.3 IRU ΣΔΦ pulses*[15]	@1.024 **SPARE**	

Minor Cycle	Type #1 Synchro-nize with Data Word[1]	Type #2 BDU Sample Schedule Table		Type #3 Command Distribution [2,3]		Type #4 Data Gathering Request		Type #5 OTHER
		#1	#2	#1	#2	#1	#2	
21	BDU–RWA	@8.192 =========(0) GN&C 2.2.9.6(1) [17] ========(2) —SPARE—(3) —SPARE—(4) —SPARE—(5) —SPARE—(6) —SPARE—(7)	@8.192 ========(0) —SPARE—(1) =========(2) —SPARE—(3) —SPARE—(4) —SPARE—(5) —SPARE—(6) —SPARE—(7)			@ *.064* *HGA–1 Gimbal angles*[15]	@ *.064* *HGA–2 Gimbal angles*[15]	
22	BDU–ASTER	==========	==========			@8.192 SSST–1 (0) Star fixes [15] GN&C 2.2.9.6(1) [17] HGA–1 H&S(2) —SPARE—(3) —SPARE—(4) —SPARE—(5) —SPARE—(6) —SPARE—(7)	@8.192 SSST–2 (0) Star fixes [15] —SPARE—(1) HGA–2 H&S(2) —SPARE—(3) —SPARE—(4) —SPARE—(5) —SPARE—(6) —SPARE—(7)	
23	BDU–MODIS	==========	=======			@1.024 Active CTIU H&S tlm [1]	@1.024 Standby CTIU H&S tlm [1]	

Minor Cycle	Type #1 Synchro-nize with Data Word[1]	Type #2 BDU Sample Schedule Table		Type #3 Command Distribution [2,3]		Type #4 Data Gathering Request		Type #5 OTHER
		#1	#2	#1	#2	#1	#2	
24	BDU–MOPITT/ CERES/ MISR	@.512 **SPARE**	@1.024 PWR 3.2.2	Ground Command		@1.024 Memory Dump **5**	@1.024 CERES–FORE H&S[12]	
25		@.512 **SPARE**	@1.024 PWR 3.2.3			@.512 **SPARE**	@1.024 PWR 3.2.2	
26		@1.024 **SPARE**	@1.024 **SPARE**			@.512 **SPARE**	@1.024 PWR 3.2.3	
27		@1.024 **SPARE**	@1.024 **SPARE**			@1.024 **SPARE**	@1.024 **SPARE**	
28		==========	=========	Ground Command		@1.024 **SPARE**	@1.024 **SPARE**	
29		==========	@1.024 PWR 3.2.1			*@.064 HGA–1 Gimbal angles*[15]	*@.064 HGA–2 Gimbal angles*[15]	
30		@.128 **SPARE**	@1.024 COMS/CDH 7.2.12			@1.024 Memory Dump **6**	@1.024 PWR 3.2.1	
31		@.128 **SPARE**	@.128 **SPARE**			@.128 **SPARE**	@1.024 COMS/CDH 7.2.12	
32		*@.128 GN&C 2.1.1 IRU ΣΔΦ pulses*[15]	@1.024 **SPARE**	Ground Command		@.128 **SPARE**	@.128 **SPARE**	
33	*CTIU–1*	@1.024 **SPARE**	@1.024 **SPARE**			*@.128 GN&C 2.1.1 IRU ΣΔΦ pulses*[15]	@1.024 **SPARE**	IMOK[5] CTIU–1

Minor Cycle	Type #1 Synchro-nize with Data Word[1]	Type #2 BDU Sample Schedule Table		Type #3 Command Distribution [2,3]		Type #4 Data Gathering Request		Type #5 OTHER
		#1	#2	#1	#2	#1	#2	
34	*CTIU–2*	@*.128* *GN&C 2.1.2 IRU* *ΣΔΦ pulses*[15]	@1.024 DAS 6.2.1			@1.024 **SPARE**	@1.024 **SPARE**	IMOK[5] CTIU–2
35	*SCC–1*	@*.128* *GN&C 2.1.3 IRU* *ΣΔΦ pulses*[15]	==========			@*.128* *GN&C 2.1.2 IRU* *ΣΔΦ pulses*[15]	@1.024 DAS 6.2.1	IMOK[5] SCC–1
36	*SCC–2*	==========	==========	Ground Command		@*.128* *GN&C 2.1.3 IRU* *ΣΔΦ pulses*[15]	@1.024 Memory Dump 7	IMOK[5] SCC–2
37	*SSST–1*	@1.024 **SPARE**	@1.024 **SPARE**			@*.064* *HGA–1 Gimbal angles*[15]	@*.064* *HGA–2 Gimbal angles*[15]	IMOK[5] SSST–1
38	*SSST–2*	@1.024 **SPARE**	@1.024 **SPARE**			@1.024 **SPARE**	@1.024 **SPARE**	IMOK[5] SSST–1
39	*HGA–1*	@1.024 **SPARE**	@1.024 **SPARE**			@1.024 **SPARE**	@1.024 **SPARE**	IMOK[5] HGA–1
40	*HGA–2*	@.512 **SPARE**	@1.024 **SPARE**	Ground Command		@1.024 **SPARE**	@1.024 **SPARE**	IMOK[5] HGA–2
41	*CERES–FORE*	==========	@.512 **SPARE**			@.512 **SPARE**	@1.024 **SPARE**	IMOK[5] CERES FORE
42	*CERES–AFT*	@1.024 **SPARE**	@1.024 **SPARE**			@1.024 Memory Dump 8	@.512 **SPARE**	IMOK[5] CERES AFT
43	*MOPITT*	@1.024 **SPARE**	@1.024 **SPARE**			@1.024 **SPARE**	@1.024 **SPARE**	IMOK[5] MOPITT
44	*MODIS*	==========	==========	Ground Command		@1.024 **SPARE**	@1.024 **SPARE**	IMOK[5] MODIS

Minor Cycle	Type #1 Synchro-nize with Data Word[1]	Type #2 BDU Sample Schedule Table		Type #3 Command Distribution [2,3]		Type #4 Data Gathering Request		Type #5 OTHER
		#1	#2	#1	#2	#1	#2	
45	*ASTER*	@.128 **SPARE**	@1.024 **SPARE**			@ *.064* *HGA–1 Gimbal angles*[15]	@ *.064* *HGA–2 Gimbal angles*[15]	IMOK[5] ASTER
46	*MISR*	@.128 **SPARE**	@.128 **SPARE**			@.128 **SPARE**	@1.024 **SPARE**	IMOK[5] MISR
47	*BDU PROP*	==========	=========			@.128 **SPARE**	@.128 **SPARE**	
48	*BDU COMS/ CDHS*	@*.128* *GN&C 2.1.1 IRU* $\Sigma\Delta\Phi$ *pulses*[15]	@1.024 **SPARE**	Ground Command		@1.024 Memory Dump **9**	@1.024 CERES–AFT H&S	
49	*BDU–Recorder*	=========	=========			@*.128* *GN&C 2.1.1 IRU* $\Sigma\Delta\Phi$ *pulses*[15]	@1.024 **SPARE**	
50	*BDU–GN&C*	@*.128* *GN&C 2.1.2 IRU* $\Sigma\Delta\Phi$ *pulses*[15]	@1.024 **SPARE**			@1.024 SCC–1 H/K	@1.024 SCC–2 H/K	
51	*BDU–Power*	@*.128* *GN&C 2.1.3 IRU* $\Sigma\Delta\Phi$ *pulses*[15]	@1.024 **SPARE**			@*.128* *GN&C 2.1.2 IRU* $\Sigma\Delta\Phi$ *pulses*[15]	@1.024 **SPARE**	
52	*BDU–DAS*	==========	==========	Ground Command		@*.128* *GN&C 2.1.3 IRU* $\Sigma\Delta\Phi$ *pulses*[15]	@1.024 **SPARE**	
53	*BDU–RWA*	==========	==========			@ *.064* *HGA–1 Gimbal angles*[15]	@ *.064* *HGA–2 Gimbal angles*[15]	
54	*BDU–ASTER*	@1.024 **SPARE**	@1.024 **SPARE**			@1.024 Memory Dump **10**	@1.024 ASTER H&S	

Minor Cycle	Type #1 Synchro-nize with Data Word[1]	Type #2 BDU Sample Schedule Table		Type #3 Command Distribution [2,3]		Type #4 Data Gathering Request		Type #5 OTHER
		#1	#2	#1	#2	#1	#2	
55	*BDU–MODIS*	@1.024 **SPARE**	@1.024 **SPARE**			@1.024 **SPARE**	@1.024 **SPARE**	
56	*BDU–MOPITT/ CERES/ MISR*	@.512 **SPARE**	@1.024 **SPARE**	Ground Command		@1.024 **SPARE**	@1.024 **SPARE**	
57		@.512 **SPARE**	@1.024 **SPARE**			@.512 **SPARE**	@1.024 **SPARE**	
58		==========	@1.024 **SPARE**	@.512 HGA A drive cmds [15]	@.512 HGA B drive cmds [15]	@.512 **SPARE**	@1.024 **SPARE**	
59		==========	=========			@1.024 CERES–FORE H/K[11]	@1.024 **SPARE**	
60		==========	==========	Ground Command		@1.024 Memory Dump 11	@1.024 MISR H&S	
61		@.128 **SPARE**	=========			*@.064 HGA–1 Gimbal angles[15]*	*@.064 HGA–2 Gimbal angles[15]*	
62		@.128 **SPARE**	@.128 **SPARE**	@.512 Wheel Torque cmds to ACE A[15]		@.128 **SPARE**	@1.024 CERES–AFT H/K[11]	
63		@1.024 **SPARE**	@1.024 **SPARE**	@.512 Wheel Torque cmds to ACE B [15]		@.128 **SPARE**	@.128 **SPARE**	

Minor Cycle	Type #1 Synchro-nize with Data Word[1]	Type #2 BDU Sample Schedule Table		Type #3 Command Distribution [2,3]		Type #4 Data Gathering Request		Type #5 OTHER
		#1	#2	#1	#2	#1	#2	
64		*@.128* *GN&C 2.1.1 IRU* *$\Sigma\Delta\Phi$ pulses*[15]	@8.192 GN&C 2.2.1(1) **—SPARE—(2)** **—SPARE—(3)** BDU–3 Instru-ment 10.2.1 (4) BDU–ASTER 9.2.1 (5) BDU–MODIS 8.2.1 (6) GN&C 2.2.10(7)	Ground Command		@1.024 **SPARE**	@1.024 **SPARE**	

Minor Cycle	Type #1 Synchro-nize with Data Word[1]	Type #2 BDU Sample Schedule Table		Type #3 Command Distribution [2,3]		Type #4 Data Gathering Request		Type #5 OTHER
		#1	#2	#1	#2	#1	#2	
65	*CTIU–1*	*@.512* *GN&C 2.1.4 Tach Pulses*[15]	*@.512* *PWR 3.1.1 FSS sun angles &*			*@.128* *GN&C 2.1.1 IRU ΣΔΦ pulses*[15]	@8.192 GN&C 2.2.1(1)	
		• compassing • Normal - Stellar	• In Safe Mode, momentum monitor checks wheel momentum	• Wheel control • TAM1 • MTRs				
							BDU–3 Instrument 10.2.1 (4) BDU–ASTER 9.2.1 (5) BDU–MODIS 8.2.1 (6) GN&C 2.2.10(7)	
66	*CTIU–2*	*@.128* *GN&C 2.1.2 IRU ΣΔΦ pulses*[15]	*@.512* *DAS 6.1.1 EAS 1,2 E&H Err*[15]			*@.512* *GN&C 2.1.4 Tach Pulses*[15]	*@.512* *PWR 3.1.1 FSS sun angles & presence*[15]	
67	*SCC–1*	*@.128* *GN&C 2.1.3 IRU ΣΔΦ pulses*[15]	==========	*@.512* *GN&C BDU Mag torque drive cmds ACE A* [15]	*@ .512* *ADE A drive CMDS* [15]	*@.128* *GN&C 2.1.2 IRU ΣΔΦ pulses*[15]	*@.512* *DAS 6.1.1 EAS 1,2 E&H Err*[15]	
68	*SCC–2*	==========	==========	Ground Command		*@.128* *GN&C 2.1.3 IRU ΣΔΦ pulses*[15]	@1.024 Memory Dump 12	

Minor Cycle	Type #1 Synchro-nize with Data Word[1]	Type #2 BDU Sample Schedule Table		Type #3 Command Distribution [2,3]		Type #4 Data Gathering Request		Type #5 OTHER
		#1	#2	#1	#2	#1	#2	
69	*SSST–1*	==========	@1.024 **SPARE**	*@.512* *GN&C BDU Mag torque drive cmds ACE B* [15]	*@.512* *ADE A drive CMDS* [15]	*@.064* *HGA–1 Gimbal angles*[15]	*@.064* *HGA–2 Gimbal angles*[15]	
70	*SSST–2*	==========	@1.024 **SPARE**			@1.024 ASTER H/K[11]	@1.024 **SPARE**	
71	*HGA–1*	==========	@1.024 **SPARE**			@1.024 MISR H/K[11]	@1.024 **SPARE**	
72	*HGA–2*	@.512 **SPARE**	@1.024 **SPARE**	Ground Command		@1.024 MODIS H/K[11]	@1.024 **SPARE**	
73	*CERES–FORE*	==========	@.512 **SPARE**			@.512 **SPARE**	@1.024 **SPARE**	Ancillary Data[6] CERES–FORE
74	*CERES–AFT*	*@.512* *COMS/CDH 7.1.1 ADE A,B array rotation*[15]	@1.024 **SPARE**			**@1.024 Memory Dump 13**	@.512 **SPARE**	Ancillary Data[6] CERES–AFT
75	*MOPITT*	==========	==========			*@.512* *COMS/CDH 7.1.1 ADE A,B array rotation*[15]	@1.024 **SPARE**	Ancillary Data[6] MOPITT
76	*MODIS*	==========	==========	Ground Command		@1.024 SCC–1 H/K	@1.024 SCC–2 H/K	
77	*ASTER*	@.128 **SPARE**	@1.024 **SPARE**			*@.064* *HGA–1 Gimbal angles*[15]	*@.064* *HGA–2 Gimbal angles*[15]	Ancillary Data[6] ASTER

Minor Cycle	Type #1 Synchro-nize with Data Word[1]	Type #2 BDU Sample Schedule Table		Type #3 Command Distribution [2,3]		Type #4 Data Gathering Request		Type #5 OTHER
		#1	#2	#1	#2	#1	#2	
78	*MISR*	@.128 **SPARE**	@.128 **SPARE**			@.128 **SPARE**	@1.024 **SPARE**	Ancillary Data[6] MISR
79	*BDU PROP*	==========	@.512 **SPARE**			@.128 **SPARE**	@.128 **SPARE**	Ancillary Data[6,7] MODISd
80	*BDU COMS/ C&DHS*	*@.128* *GN&C 2.1.1 IRU* *ΣΔΦ pulses*[15]	@1.024 **SPARE**	Ground Command		**@1.024 Memory Dump 14**	@.512 **SPARE**	
81	*BDU–Recorder*	@8.192 **—SPARE—(0)** **—SPARE—(1)** –DAS 6.2.2 (2) –PROP 5.2.5 (3) –PROP 5.2.3 (4) –PROP 5.2.1 (5) –PWR 3.2.8 (6) –PWR 3.2.4 (7)	@1.024 **SPARE**			*@.128* *GN&C 2.1.1 IRU* *ΣΔΦ pulses*[15]	@1.024 **SPARE**	

Minor Cycle	Type #1 Synchro-nize with Data Word[1]	Type #2 BDU Sample Schedule Table		Type #3 Command Distribution [2,3]		Type #4 Data Gathering Request		Type #5 OTHER
		#1	#2	#1	#2	#1	#2	
82	*BDU–Power*	*@.128* *GN&C 2.1.2 IRU* *ΣΔΦ pulses*[15]	@8.192 **—SPARE—(0)** **—SPARE—(1)** –DAS 6.2.3 (2) –PROP 5.2.6 (3) –PROP 5.2.4 (4) –PROP 5.2.2 (5) –RWA 4.2.2 (6) –PWR 3.2.5 (7)			@8.192 **—SPARE—(0)** **—SPARE—(1)** –DAS 6.2.2 (2) –PROP 5.2.5 (3) –PROP 5.2.3 (4) –PROP 5.2.1 (5) –PWR 3.2.8 (6) –PWR 3.2.4 (7)	@1.024 **SPARE**	
83	*BDU–GN&C*	*@.128* *GN&C 2.1.3 IRU* *ΣΔΦ pulses*[15]	@1.024 **SPARE**			*@.128* *GN&C 2.1.2 IRU* *ΣΔΦ pulses*[15]	@8.192 **—SPARE—(0)** **—SPARE—(1)** –DAS 6.2.3 (2) –PROP 5.2.6 (3) –PROP 5.2.4 (4) –PROP 5.2.2 (5) –RWA 4.2.2 (6) –PWR 3.2.5 (7)	

Minor Cycle	Type #1 Synchro-nize with Data Word[1]	Type #2 BDU Sample Schedule Table		Type #3 Command Distribution [2,3]		Type #4 Data Gathering Request		Type #5 OTHER
		#1	#2	#1	#2	#1	#2	
84	*BDU–DAS*	==========	==========	Ground Command		*@.128* *GN&C 2.1.3 IRU* ***ΣΔΦ pulses***[15]	@1.024 **SPARE**	
85	*BDU–RWA*	==========	@1.024 **SPARE**			*@.064* *HGA–1 Gimbal angles*[15]	*@.064* *HGA–2 Gimbal angles*[15]	Time Code[8] CTIU–1
86	*BDU–ASTER*	@65.536 **—SPARE—(0)** • • • —SPARE—**(58)** –PROP 5.2.9 (59) –RWA 4.2.2 (60) –PWR 3.2.6 (61) –PWR 3.2.7 (62) –GN&C 2.2.4(63)	@1.024 **SPARE**			**@1.024 Memory Dump 15**	@1.024 **SPARE**	Time Code[8] CTIU–2

Minor Cycle	Type #1 Synchro-nize with Data Word[1]	Type #2 BDU Sample Schedule Table		Type #3 Command Distribution [2,3]		Type #4 Data Gathering Request		Type #5 OTHER
		#1	#2	#1	#2	#1	#2	
87	*BDU-MODIS*	@1.024 **SPARE**	@1.024 **SPARE**			@65.536 **—SPARE—(0)** • • • —SPARE—(58) –PROP 5.2.9 (59) –RWA 4.2.2 (60) –PWR 3.2.6 (61) –PWR 3.2.7 (62) –GN&C 2.2.4(63)	@1.024 **SPARE**	Time Code[8] SCC–1
88	*BDU-MOPITT/ CERES/ MISR*	@.512 **SPARE**	@1.024 **SPARE**	Ground Command		@1.024 **SPARE**	@1.024 **SPARE**	Time Code[8] SCC–2
89		@.512 **SPARE**	@1.024 GN&C 2.2.5			@.512 **SPARE**	@1.024 **SPARE**	Time Code[8] CERES–FORE
90		@1.024 **SPARE**	@1.024 **SPARE**			@.512 **SPARE**	@1.024 GN&C 2.2.5	Time Code[8] CERES–AFT
91		==========	@1.024 GN&C 2.2.7			@1.024 **SPARE**	@1.024 **SPARE**	Time Code[8] MOPITT

Minor Cycle	Type #1 Synchro-nize with Data Word[1]	Type #2 BDU Sample Schedule Table		Type #3 Command Distribution [2,3]		Type #4 Data Gathering Request		Type #5 OTHER
		#1	#2	#1	#2	#1	#2	
92		==========	==========	Ground Command		**@1.024 Memory Dump 16**	@1.024 GN&C 2.2.7	Time Code[8] MODIS
93		@.128 **SPARE**	@1.024 GN&C 2.2.6			*@.064 HGA–1 Gimbal angles[15]*	*@.064 HGA–2 Gimbal angles[15]*	Time Code[8] ASTER
94		@.128 **SPARE**	@.128 **SPARE**			@.128 **SPARE**	@1.024 GN&C 2.2.6	Time Code[8] MISR
95		@1.024 PWR 3.2.9	@1.024 **SPARE**			@.128 **SPARE**	@.128 **SPARE**	Time Code[8] MOPITT
96		*@.128 GN&C 2.1.1 IRU ΣΔΦ pulses[15]*	@1.024 PWR 3.2.10	Ground Command		@1.024 PWR 3.2.9	@1.024 **SPARE**	
97	*CTIU–1*	==========	@1.024 **SPARE**			*@.128 GN&C 2.1.1 IRU ΣΔΦ pulses[15]*	@1.024 PWR 3.2.10	
98	*CTIU–2*	*@.128 GN&C 2.1.2 IRU ΣΔΦ pulses[15]*	@1.024 **SPARE**			**@1.024 Memory Dump 17**	@1.024 **SPARE**	
99	*SCC–1*	*@.128 GN&C 2.1.3 IRU ΣΔΦ pulses[15]*	@1.024 **SPARE**			*@.128 GN&C 2.1.2 IRU ΣΔΦ pulses[15]*	@1.024 **SPARE**	
100	*SCC–2*	==========	==========	Ground Command		*@.128 GN&C 2.1.3 IRU ΣΔΦ pulses[15]*	@1.024 **SPARE**	

Minor Cycle	Type #1 Synchro-nize with Data Word[1]	Type #2 BDU Sample Schedule Table		Type #3 Command Distribution [2,3]		Type #4 Data Gathering Request		Type #5 OTHER
		#1	#2	#1	#2	#1	#2	
101	*SSST–1*	========	==========			*@.064 HGA–1 Gimbal angles[15]*	*@.064 HGA–2 Gimbal angles[15]*	
102	*SSST–2*	==========	==========			@1.024 SSST–1 H/K	@1.024 SSST–2 H/K	
103	*HGA–1*	========	@1.024 **SPARE**			@1.024 HGA–1 H/K	@1.024 HGA–2 H/K	
104	*HGA–2*	@.512 **SPARE**	@1.024 **SPARE**	Ground Command		**@1.024 Memory Dump 18**	@1.024 **SPARE**	
105	*CERES–FORE*	@.512 **SPARE**	@1.024 **SPARE**			@.512 **SPARE**	@1.024 **SPARE**	
106	*CERES–AFT*	@1.024 **SPARE**	@1.024 **SPARE**			@.512 **SPARE**	@1.024 **SPARE**	
107	*MOPITT*	@1.024 **SPARE**	@1.024 **SPARE**			@1.024 **SPARE**	@1.024 **SPARE**	
108	*MODIS*	==========	==========	Ground Command		@1.024 **SPARE**	@1.024 **SPARE**	
109	*ASTER*	==========	@.128 **SPARE**			*@.064 HGA–1 Gimbal angles[15]*	*@.064 HGA–2 Gimbal angles[15]*	
110	*MISR*	@.128 **SPARE**	@.128 **SPARE**			**@1.024 Memory Dump 19**	@.128 **SPARE**	
111	*BDU PROP*	=========	=========			@.128 **SPARE**	@.128 **SPARE**	
112	*BDU COMS/ C&DHS*	*@.128 GN&C 2.1.1 IRU $\Sigma\Delta\Phi$ pulses[15]*	@1.024 **SPARE**	Ground Command		@1.024 SCC–1 H/K	@1.024 SCC–2 H/K	

Minor Cycle	Type #1 Synchro-nize with Data Word[1]	Type #2 BDU Sample Schedule Table		Type #3 Command Distribution [2,3]		Type #4 Data Gathering Request		Type #5 OTHER
		#1	#2	#1	#2	#1	#2	
113	*BDU–Recorder*	==========	==========			*@.128* *GN&C 2.1.1 IRU* *ΣΔΦ pulses*[15]	@1.024 **SPARE**	
114	*BDU–GN&C*	*@.128* *GN&C 2.1.2 IRU* *ΣΔΦ pulses*[15]	@1.024 **SPARE**			@1.024 SCC–1 H&S	@1.024 SCC–1 H&S	
115	*BDU–Power*	*@.128* *GN&C 2.1.3 IRU* *ΣΔΦ pulses*[15]	==========			*@.128* *GN&C 2.1.2 IRU* *ΣΔΦ pulses*[15]	@1.024 **SPARE**	
116	*BDU–DAS*	==========	==========	Ground Command		*@.128* *GN&C 2.1.3 IRU* *ΣΔΦ pulses*[15]	**@1.024 Memory Dump 20**	
117	*BDU–RWA*	==========	==========			*@.064* *HGA–1 Gimbal angles*[15]	*@.064* *HGA–2 Gimbal angles*[15]	
118	*BDU–ASTER*	@1.024 **SPARE**	@1.024 **SPARE**			@1.024 Active CTIU tlm H/K	@1.024 Stanby CTIU tlm H/K	
119	*BDU–MODIS*	@1.024 **SPARE**	@1.024 **SPARE**			@1.024 **SPARE**	@1.024 **SPARE**	
120	*BDU–MOPITT/ CERES/ MISR*	@.512 **SPARE**	@1.024 **SPARE**	Ground Command		@1.024 **SPARE**	@1.024 **SPARE**	
121		==========	@.512 **SPARE**			@.512 **SPARE**	@1.024 **SPARE**	
122		@1.024 **SPARE**	@1.024 **SPARE**	*@.512* *HGA A drive comds* [15]	*@.512* *HGA B drive cmds* [15]	**@1.024 Memory Dump 21**	@.512 **SPARE**	

Minor Cycle	Type #1 Synchro-nize with Data Word[1]	Type #2 BDU Sample Schedule Table		Type #3 Command Distribution [2,3]		Type #4 Data Gathering Request		Type #5 OTHER
		#1	#2	#1	#2	#1	#2	
123		@1.024 **SPARE**	@1.024 **SPARE**		@1.024 Attitude thruster cmd to PMEA2[15]	@1.024 **SPARE**	@1.024 **SPARE**	
124		==========	==========	Ground Command		@1.024 **SPARE**	@1.024 **SPARE**	
125		@.128 **SPARE**	@1.024 **SPARE**		@1.024 Δ V thruster cmds to PMEA2[15]	@ *.064* *HGA–1 Gimbal angles*[15]	@ *.064* *HGA–2 Gimbal angles*[15]	
126		@.128 **SPARE**	@.128 **SPARE**	@*.512* *Wheel Torque cmds to ACE A* [15]	@1.024 Attitude thruster cmd to PMEA1[15]	@.128 **SPARE**	@1.024 **SPARE**	
127		@8.192 GN&C 2.2.2,(0) [ACE A,B tlm synch [14,15 (4.096)]] GN&C 2.2.1 (1) **—SPARE—(2)** **—SPARE—(3)** GN&C 2.2.3 (4) [ACE A,B tlm synch [14,15 (4.096)]] GN&C 2.2.8 (5) **—SPARE—(6)** **—SPARE—(7)**	==========	@*.512* *Wheel Torque cmds to ACE B* [15]	@1.024 Δ V thruster cmds to PMEA1[15]	@.128 **SPARE**	@.128 **SPARE**	

Footnote 1: Type 1 Task

SYNCHRONIZE WITH DATA WORD

Purpose: permits the C&T RTs to maintain cycle synchronization with the Active CTIU. Synchronize with Data word sent based on RT address. RT address maps to minor cycle value, i.e., RT address 1 is Minor cycle 1. Thereafter, issued every 256 milliseconds (32 Minor Cycles) apart to same RT. Only Assigned RTs receive synch with data word. The synchronize with data word contains the active CTIUs expected major and minor cycles values at the time of receipt by a C&T RT. The data structure is defined in the GIIS.

Footnote 2: GROUND COMMAND

An orbit is approximately 99 minutes in duration. Nominal contact times will be two 10 minute periods per orbit. The ground command task is used only during a contact time and then only by a command data transfer received via the uplink. Ground command task is allowed once every fourth minor cycle. The maximum length for a ground command data transfer on the C&T bus is 33 16–bit data words (a 1553B message header plus 32 16–bit data words).

Selected minor cycle 0 as ground command to reduce work load on CTIU at Major Cycle Boundary since during one orbit, there will not be a ground command processed. The SCC has to have apriori knowledge when ground and onboard commands since that is it data flow control rate.

Footnote 3: ONBOARD commanding by the SCC.

There are 3 contiguous minor cycles out of 4 which are reserved for the active SCC's issuing of commands. Data flow control is performed by the SCC.

Footnote 4: Type 4 Task

Purpose: Telemetry Gathering tasks are identified as well as the distribution (H/K only, H&S only, both) associated with each gather.

Footnote 5: IMOK MESSAGES

IMOK message are sent to embedded C&T RTs. Some embedded C&T RTs, like the HGA, will not process them.

Footnote 6: ANCILLARY DATA

Active CTIU replicates Ancillary data and distributes it as individual 1553B messages to designated recipients (Instruments).

Footnote 7: TYPE 5 MESSAGES

A type 5 message of 32 16–bit data words can never be delivered in the same minor cycle as a ground command. A ground command of 32 16–bit data words plus a type 5 message of 32 16–bit data words (Ancillary Data message) would cause an minor cycle task list over–run in a worst case scenario.

Footnote 8: TIME CODE MESSAGES

Active CTIU shall generates and delivers time code message.

Footnote 9: 16 Kbps telemetry gathering

packet 0 starts on Master Cycle N–1, Major Cycle 63, Minor Cycle 119 Ends on Master cycle N, Major cycle 0, minor cycle 118
packet 1 starts on Master Cycle N, Major Cycle 0, Minor Cycle 119 Ends on Master cycle N, Major cycle 1, minor cycle 118

.
.
.

packet 63 starts on Master Cycle N, Major Cycle 62, Minor Cycle 119 Ends on Master cycle N, Major cycle 63, minor cycle 118

Footnote 10: 1 Kbps telemetry gathering

packet 0 starts on Master Cycle N–1, Major Cycle 63, Minor Cycle 119 Ends on Master cycle N+1, Major cycle 0, minor cycle 118
packet 1 starts on Master Cycle N+1, Major Cycle 0, Minor Cycle 119 Ends on Master cycle N+2, Major cycle 1, minor cycle 118

.
.
.

packet 31 starts on Master Cycle N, Major Cycle 61, Minor Cycle 119 Ends on Master cycle N, Major cycle 63, minor cycle 118

Footnote 11: Instrument H/K telemetry gather request.

Maximum of once per major cycle with maximum of 32 data words

Footnote 12: Instrument H&S telemetry gather request.

Maximum of once per major cycle with maximum of 1 data words

Footnote 13: MEMORY DUMP GATHER REQUEST: Used for memory dump and C&T loopback.

Minimum time between memory dump gather is every 6 minor cycles. Could be longer. Must be a minimum of 6 minor cycles apart. Must be 21. The intent is never to exceed the downlink rate. The downlink rate can be 16 kbps or 1 kpbs.

Footnote 14: DN–GN&C–039A

GN&C BDU sample schedule table 1A, 1B. The tlm synch to an ACE is every 4 EOS seconds. Both 1A and 1B will contain telemetry sync to ACE A and ACE B respectively. 1A and 1B will differ in other telemetry control words. These are TBD but will probably active/passive analogs/bilevels.

Footnote 15:DN–GN&C–039A

Footnote 16:DN–GN&C–039A

tlm sync for frame B to transponder 1 and 2 respectively. 1 msec wait before readout can occur

Footnote 17: DN–GN&C–039

See footnote 14.

[1] This data is provided to the SCC and is included in the SCC telemetry.

[2] This data is described in detail in serial I/O under BDU sample schedule tables GN&C 2.2.9.1 through 2.2.9.6

[3] Per Elliott. This needs to be controlled. First enable must occur not earlier than 1.032 seconds after the ACE TLM sync. 48th byte must be gathered before next ACE tlm sync. This can be handled in different ways. It will take 3 BDU sample schedule tables (@ 16 entries per table) to readout a single ACE and it must be done before that ACE receives another telemetry synch. TLM syncs to an ACE are spaced at 4 EOS seconds.

Table V. C&T Remote Terminal Address Assignment

Remote Terminal Number	Name
1	Command and Telemetry Interface Unit (CTIU)–1
2	CTIU–2
3	Spacecraft Control Computer (SCC) –1
4	SCC–2
5	Solid State Star Tracker (SSST)–1
6	SSST–2
7	High Gain Antenna (HGA)–1
8	HGA–2
9	CERES–FORE
10	CERES–AFT
11	MOPITT
12	MODIS
13	ASTER
14	MISR
15	BDU—Propulsion Subsystem (PROP)
16	BDU—Communication/Command and Data Handling (COMM/C&DH) [SCCs, CTIUs, COMS]
17	BDU—Recorder [Solid State Recorder (SSR), Science Formatting Equipment (SFE)]
18	BDU—Guidance Navigation and Control (GN&C)

19	BDU—Power
20	BDU—Direct Access System (DAS)—COMM
21	BDU—Reaction Wheel Assembly (RWA)
22	BDU—ASTER
23	BDU—MODIS
24	BDU—MOPITT/CERES/MISR
All other C&T RT addresses are reserved.	

5 BDU OPERATIONS

5.1 BDU Sample Schedule Tables

Data characteristics observed as a result of creating BDU Sample Schedule tables for the telemetry data in DN–RES–027 are noted in the following paragraphs. Table VI is the GN&C BDU Sample Schedule Table 2.2.7. There are 6 analog signals (Type Column). The number of bits representing the data from each analog is 8 (Length column). All the analog data is sampled and included in the H&S S–band telemetry stream every 65.536 seconds. The active analogs, as shown in the Table VI, are sampled and included in the H/K for the active analogs every 1.024 seconds. This data is not included in the SCC closed loop datastream. The Note column (3.) references EOS–DN–RES–027 1.2.7.2 GN&C—Inertial Reference Unit Telemetry as the source for this information.

Table VI. GN&C BDU Sample Schedule Table 2.2.7

Note	Telemetry Point	Type	Board Address	Telemetry channel	Minor	Modulo	Window	Table #	Data Word	Start MSB	Length Bits	H&S Rate	H/K Rate	SCC Rate
3.	IRU Motor Current1	AA							0		8	1/64	1/1	
3.	IRU Motor Current2	AA							0		8	1/64	1/1	
3.	IRU Motor Current3	AA							1		8	1/64	1/1	
3.	IRU Gyro temperature A	PA							1		8	1/64	1/64	
3.	IRU Gyro temperature B	PA							2		8	1/64	1/64	
3.	IRU Gyro temperature C	PA							2		8	1/64	1/64	

Table VII represents the observations made about GN&C BDU Sample Schedule Table 2.2.7.

Table VII. Data Characteristics of GN&C BDU Sample Schedule Table 2.2.7

	Rate	tlm sync	SSTABLE		GATHER		H/K			H&S			SCC		
			msgs in EOS min	16bit data word in msg	msgs in EOS min	16bit data word in msg	in-effi-cien-cies	word count per msg	total 16bit word in 65.536	in-effi-cien-cies	word count per msg	total 16bit word in 65.536	in-effi-cien-cies	word count per msg	total 16bit word in 65.536
GN&C 2.2.7	1/1	0	64	6	63	2	Y	2	128						
GN&C 2.2.7	1/64	0			1	3	N	3	3	N	3	3			
INEFFICIENCIES: Yes—odd number of 8 bit words 63 out of 64 times															

This table is used for both H/K and H&S distribution. Within a 65.536 period (master cycle), the entire BDU sample schedule table is transmitted 8 times. Sixty–three out of 64 times, a telemetry gather message is transmitted to the BDU requesting the sampled data of 2 16–bit data words. One out 64 times

The sampled data transmitted from any C&T RT to the CTIU uses a word size of 16–bits. The first analog signal supplies 8 bits to the BDU. The BDU stores the 8–bit analog data in word 1 in the MSB bit (bit 0) of a 16–bit word. The second analog signal (8–bits in length) is stored in word 1 starting at the LSB (bit 8). The third analog signal is stored in MSB of word 2 in the RT subaddress.

In 63 out of 64 times, there is an extra 8 bits gathered. This is 31.5 16–bit data words in the H/K telemetry. In Section 5.2 and 5.3, these data characteristics are described.

A subset of the data characteristics tables have been included for examples.

Table VIII. Data Characteristics of COMS/CDH BDU Sample Schedule Table 7.2.5

	Rate	tlm sync	SSTABLE		GATHER		H/K			H&S			SCC		
			msgs in EOS min	16bit data word in msg	msgs in EOS min	16bit data word in msg	inef-fi-cien-cies	word count per msg	total 16bit word in 65.536	inef-fi-cien-cies	word count per msg	total 16bit word in 65.536	inef-fi-cien-cies	word count per msg	total 16bit word in 65.536
COM 7.25	1/8	0	8	16	8	8	Y	8	64						
COM 7.25	1/64									Y	8	8			

Sampled 8 times. 7 out of 8 times is for H/K only and the sampled data word count is 2. 1 out of 8 times is both H&S and H/K and the sampled data word count is 3.
start–code (0–7) for 1/64 rate would be one of the 8 sample times.
hidden inefficiencies: 6 bits for tlm gather — see reserved

Table IX. Data Characteristics of COMS/CDH BDU Sample Schedule Table 7.2.6

	Rate	tlm sync	SSTABLE		GATHER		H/K			H&S			SCC		
			msgs in EOS min	16bit data word in msg	msgs in EOS min	16bit data word in msg	inef-fi-cien-cies	word count per msg	total 16bit word in 65.536	inef-fi-cien-cies	word count per msg	total 16bit word in 65.536	inef-fi-cien-cies	word count per msg	total 16bit word in 65.536
COM 7.2.6	1/8	0	8	4	7	2	N	8	16						
COM 7.2.6	1/64				1	4				N	1	4			

Sampled 8 times. 7 out of 8 times is for H/K only and the sampled data word count is 2. 1 out of 8 times is both H&S and H/K and the sampled data word count is 4.
start–code (0–7) for 1/64 rate would be one of the 8 sample times.
inefficiencies: NONE

Table X. Data Characteristics of Power BDU Sample Schedule Table 3.2.1

	Rate.	tlm sync	SSTABLE		GATHER		H/K			H&S			SCC		
			msgs in EOS min	16bit data word in msg	msgs in EOS min	16bit data word in msg	inef-fi-cien-cies	word count per msg	total 16bit word in 65.536	inef-fi-cien-cies	word count per msg	total 16bit word in 65.536	inef-fi-cien-cies	word count per msg	total 16bit word in 65.536
PWR 3.2.1	1/1	0	64	12	64	6	N	6	384					2	256
PWR 3.2.1	1/8									N	6	48			

Sample table transmitted 64 time in 65.536.—once per major cycle and always same minor cycle therefore evenly spaced sample times. 56 times for H/K only and 8 times for both H/K and H&S. H&S sampling is spaced evenly over the total 64 sample times. Start–Code value ranges from 0–7 then every eighth time there after. Since 1/1 is once per major cycle, the major cycle counter can be used to derive the subsequent intervals given the start code.

Table XI. Data Characteristics of COM/CDH BDU Sample Schedule Table 7.2.7

	Rate.	tlm sync	SSTABLE		GATHER		H/K			H&S			SCC		
			msgs in EOS min	16bit data word in msg	msgs in EOS min	16bit data word in msg	inef-fi-cien-cies	word count per msg	total 16bit word in 65.536	inef-fi-cien-cies	word count per msg	total 16bit word in 65.536	inef-fi-cien-cies	word count per msg	total 16bit word in 65.536
COM 7.2.7	1/1	8	64	16	64	4	N	4	256						
COM 7.2.7	1/1									N	64	256			

Sample table transmitted 8 times within 65.536 and distributed to both H/K and H&S each time.
Processing NOTES.
(this was extraction from working notes and contains what was there plus enhancements)
7.2.7 must be processed 7.2.8 processed (point–to–point serial readout)

5.4 Relationships Between Rate and Distribution of Sampled Data

Depending upon the encoding associated with the telemetry gather requests, the CTIU can place the data into one or more telemetry datastreams. These datastreams are the H/K telemetry, the H&S telemetry and the SCC closed loop.

Table XII. Rate and Distribution

	H/K		H&S		SCC	
Table	Rate	Return word count	Rate	Return word count	Rate	R
VII	1/1	2	1/64	3	–	

VIII	1/8	8	1/64	8	–	
IX	1/8	2	1/64	4	–	
X	1/1	6	1/8	8	–	
XI	1/1	4	1/1	4	–	
Combination of Rates and Distribution						
	1/1		1/1			
	1/1		1/8			
	1/1		1/64			
	1/8		1/8			
	1/8		1/64			
	1/8		1/64		.512	
	1/8		–			
	1/64		1/64			
					.064	
					.128	
					.128	.512
					.512	

5.5 Inefficiencies

Table XIII. Inefficiencies

Table	Inefficiencies
VII	The sampled data transmitted from any C&T RT to the CTIU uses a word size of 16–bits. The first analog signal supplies 8 bits to the BDU. The BDU stores the 8–bit analog data in word 1 in the MSB bit (bit 0) of a 16–bit word. The second analog signal (8–bits in length) is stored in word 1 starting at the LSB (bit 8). The third analog signal is stored in MSB of word 2 in the RT subaddress.
VIII	Each bilevel group represent 8 bilevels. A group contains only 1 type of bilevels (passive, active). Bilevel data is represented by a single bit. 5 of the 8 bits in this group were assigned. The inefficiency within the group is 3. The inefficiency for a datastream within a master cycle depends on the sampling rate.
IX	None
X	None
XI	None

5.5.1 BDU Sampling

5.5.2 Sample/Gather 1553 Messages and Message Length in Words

A BDU sample schedule table (TYPE 2 task) is one 1553B message. The associated telemetry gather request (TYPE 4 task) is another 1553B message. In only one instance, where the telemetry synch is needed every 1.024 seconds, is there no associated telemetry gather request. The firmware algorithm and Bus Utilization Table encoding will ensure this.

The number of data words used in the BDU sample schedule table is usually twice the number of the associated telemetry gather request. The telemetry control word for an analog signal is 16–bit data word; the analog data is 8 bits. The same ratio applies to a group of bilevels and serial I/O. No data appears whenever the telemetry control word is encoded as a telemetry synch or no–op

Table XIV. Number of 1553B Messages and Data Words

Table	Sample Schedule Table			Telemetry Gather			Other Telemetry Gather If required		
	Rate	Messages in 65.536	16–bit word count	Rate	Messages in 65.536	16–bit Word Count	Rate	Messages in 65.536	16–bit Word Count
VII	1/1	64	6	1/1	63	2	1/64	1	3
VIII	1/8	8	16	1/8	8	8	1/64		
IX	1/8	8	4	1/8	7	2	1/64	1	4
X	1/1	64	12	1/1	64	6	1/8		
XI	1/1	64	16	1/1	64	4	1/1		

This design note uses the premise that the BDU sample schedule table is transmitted even though all the sampled data is not returned each time. The number of messages to the RT remain the same but the word count of the message increases. The number of messages from the RT and the number of words in a message do not change. The BDU has a fixed amount of time set aside for sampling regardless of number of telemetry control words in the BDU sample schedule table. This approach reduces the number of BDU sample schedule tables stored by the CTIU. This premise minimizes the number of unique BUT sample/gather operations (CELL usage reduced)

> A complete BDU sample schedule table must be sent each time because the BDU requires the last telemetry control word to have the EOT data field bit set.

Table VII and Table VIII only differ because Table VIII 16–bit word count is the same whether gathering and distribution algorithm uses 7 out of 8 times for H/K and 1 out of times for both H/K and H&S.

> The active CTIU needs two telemetry gathers stored at most stored in addition to the BDU sample schedule table plus the encoding used to determine when to issue each telemetry gather and how to distribute the sampled data associated with the specific telemetry gather.
>
> Table X: This sample table transmitted 64 time in 65.536.—once per major cycle and always same minor cycle in each major cycle (this ensures a deterministic time for sampling). Out of the 64 times sampling occurs, 56 times will be for H/K only

and 8 times will be for both H/K and H&S. H&S sampling will be spaced evenly over the total 64 sample times. Start–Code value ranges from 0–7 then every eighth time there after. Since 1/1 is once per major cycle, the major cycle counter can be used to derive the subsequent intervals given the start code.

Table XI has two telemetry synchs and six no–op codes. This reduces the number of data words gathered since they do not cause data to be sampled.

6 CONCLUSIONS

As shown, the Command and Telemetry Bus meets the requirements of the EOS-AM spacecraft. The GN&C closed-loop control commands and telemetry have been allocated and meet the timing requirements. There are 32 commands in every major cycle for uplink command distribution. Of the command cells left, the GN&C commands are allocated 24. This leaves 168 command cells available for absolute time stored commands, relative time sequence commands, FDIR commands, etc.

The telemetry allocations include 21 cells for the gathering of memory dumps. The remainder has been allocated between the several subcommutation rates. Table XV shows the allocations and assignments for the bus utilization table. The 354 unique table entries is less than the previous estimate in the software memo "CTIU Firmware ROM Estimate, EOS-S/W-247" of 403 unique tables. Therefore, the memory usage should be less. In addition, methods will be used to decrease the number of unique tables required to reduce memory requirements and produce little or no impact on processing throughput requirements. The C&T bus has the margin to accommodate any changes as the spacecraft design progesses.

Table XV. Subcom Rates

Subcom Rate (occurrence/ second)	Allocation (# of Tables)	Assigned (# of Tables)	Spare (# of Tables)	Percent Utilization
1/.064	2	2	0	100% [1]
1/.128	9	3	6	33%
1/.512	13	4	9	31%
1/1	114	40	74	35%
1/8	88	54	34	61%
1/64	128	6	122	5%
Totals	**354**	**109**	**245**	**31%**

[1] Verified with GN&C engineers to be sufficient.

A table is defined to be 1 to 16 telemetry control words in length.

7 FOLLOW–ON

The current source of the command and telemetry for the spacecraft will be updated as the spacecraft design progresses. This will require that the C&T bus utiliation schedule updated to assess the impacts to the utilization values. The changes will be controlled and documented in the Command and Telemetry Database (OPD–140 and OPD–150). The SECN process will be used initially. The frequency of the SECNs is expected to be low; however, each SECN may represent many changes.

The automation of the data for the bu utilization table analysis and generation is being investigated.

The downlink packet structure is generated by the CTIU's placement of gather messages in the packet in the order received across the C&T bus. Therefore, the packet formats can generated because of the bus utilization table is now filled in. This effort will be done after the next bus utiliation table update. The possibility is being investigated to determine if the packet structure can be a product of the C&T database.

The BUT will reside in the CTIU and, therefore, a method of producing the binary format for the table will be investigated. Two promising methods would be that it is a product of the rule driven software for creating the table or, less likely, a product of the C&T database.

APPENDIX I

10 BDU SAMPLE SCHEDULE TABLES

2 GN&C BDU

Note Column:

1. EOS–DN–RES–027 1.2.6.1 C&DH—BDU
2. EOS–DN–RES–027 1.2.7.1 GN&C—Attitude Control Electronics (ACE)
3. EOS–DN–RES–027 1.2.7.2 GN&C—Inertial Reference Unit Telemetry
4. EOS–DN–RES–027 1.2.7.5 GN&C—Star Tracker
   (this covers both the embedded RT and SSST telemetry gathered from the GN&C BDU)
5. EOS–DN–RES–027 1.2.7.6 GN&C—Three Axis Magnetometer (TAM)
6. EOS–DN–RES–027 1.2.7.8 GN&C—Body Mounted Coarse Sun Sensor (CSS)
7. EOS–DN–RES–027 1.2.7.10 GN&C–Power Switching Unit (PSU)
8. DN–GN&C–039–Rev A.

GN&C Journal

2.2.9 GN&C Serial I/O Interface: Processing Notes

EOS–DN–RES–027 1.2.7.1 GN&C—Attitude Control Electronics (ACE)
This is a point–to–point serial I/O interface. ACE A and ACE B each have one. The subparagraphs describe the sampling/gathering in regard to this interface.

[1] This data is provided to the SCC and is included in the SCC telemetry.

[2] The sampling rate of this IRU telemetry can be reduced if there is a need for bandwidth.

[3] This is a potential gotcha. First enable must occur not earlier than 1.032 seconds after the ACE TLM sync. 48th byte must be gathered before next ACE tlm sync. This can be handled in different ways. It will take 3 BDU sample schedule tables (@ 16 enteries per table) to readout a single ACE and it must be done before that ACE receives another telemetry synch. TLM syncs to an ACE are spaced at 4 EOS seconds.

COMS Journal:

C&DH Journal

Questions to ask:

Elliott:

1.2.7.1 ACE has TAM field strength (all axes)
1.2.7.6 TAM has field strength (all axes)
Please explain. both are AA both have total of 48 bits

Footnotes:

[1] The sampling rate of this IRU telemetry can be reduced if there is a need for telemetry

2.1 SCC Closed Loop

2.1.1 BDU Sample Schedule table 2.1.1

SS table	tlm sync hs	Rate	SS table		Gather		H/K			H&S			SCC		
			# msg in EOS min	16–bit word count	# msg in EOS min	16–bit word count	inef-fi-cien-cies	word counts	total 16bit word in 65.536	inef-fi-cien-cies	word counts	total 16bit word in 65.536	inef-fi-cien-cies	word counts	total 16bit word in 65.536
GN &C 2.1.1	0	.128	512	16	512	8							N	8	4096
Total tlm gathers is@.128 is 8 per major cycles @ 5 16–bit words. 512 gathers per master cycle															

Note	Telemetry Point	Type	Board Address	Telemetry channel	Minor	Modulo	Window	Table #	Data Word	Start MSB	Length Bits	H&S Rate	H/K Rate	SCC Rate
8.	IRU Σ(ΔΦ pulses: XM1 byte 1) (ACE A)	S							0	0	8			.128
8.	IRU Σ(ΔΦ pulses: YM1 byte 1) (ACE A)	S							0	8	8			.1[illegible]
8.	IRU Σ(ΔΦ pulses: ZM1 byte 1) (ACE A)	S							1	0	8			.128
8.	IRU Σ(ΔΦ pulses: XM2 byte 1) (ACE A)	S							1	8	8			.128
8.	IRU Σ(ΔΦ pulses: YM2 byte 1) (ACE A)	S							2	0	8			.128
8.	IRU Σ(ΔΦ pulses: ZM2 byte 1) (ACE A)	S							2	8	8			.128
8.	IRU Σ(ΔΦ pulses: XM1 byte 1) (ACE B)	S							3	0	8			.128
8.	IRU Σ(ΔΦ pulses: YM1 byte 1) (ACE B) 2	S							3	8	8			.128
8.	IRU Σ(ΔΦ pulses: ZM1 byte 1) (ACE B)	S							4	0	8			.128
8.	IRU Σ(ΔΦ pulses: XM2 byte 1) (ACE B)	S							4	8	8			.128
8.	IRU Σ(ΔΦ pulses: YM2 byte 1) (ACE B)	S							5	0	8			.128
8.	IRU Σ(ΔΦ pulses: ZM2 byte 1) (ACE B)	S							5	8	8			.128
8.	IRU Σ(ΔΦ pulses: XM1 byte 2) (ACE A)	S							6	0	8			.

Note	Telemetry Point	Type	Board Address	Telemetry channel	Minor	Modulo	Window	Table #	Data Word	Start MSB	Length Bits	H&S Rate	H/K Rate	SCC Rate
8.	IRU Σ(ΔΦ pulses: YM1 byte 2) (ACE A)	S							6	8	8			.128
8.	IRU Σ(ΔΦ pulses: ZM1 byte 2) (ACE A)	S							7	0	8			.128
8.	IRU Σ(ΔΦ pulses: XM2 byte 2) (ACE A)	S							7	8	8			.128
Redlines from Elliot dated 7/30/93														

2.1.2 BDU Sample Schedule table 2.1.2

SS table	tlm sync hs	Rate	SS table		Gather		H/K			H&S			SCC		
			# msg in EOS min	16–bit word count	# msg in EOS min	16–bit word count	inef-fi-cien-cies	word counts	total 16bit word in 65.536	inef-fi-cien-cies	word counts	total 16bit word in 65.536	inef-fi-cien-cies	word counts	total 16bit word in 65.536
GN&C 2.1.2	0	.128	512	16	512	8							N	8	4096
Total tlm gathers is@.128 is 8 per major cycles @ 5 16–bit words. 512 gathers per master cycle															

Note	Telemetry Point	Type	Board Address	Telemetry channel	Minor	Modulo	Window	Table #	Data Word	Start MSB	Length Bits	H&S Rate	H/K Rate	SCC Rate
8.	IRU Σ(ΔΦ pulses: YM2 byte 2) (ACE A)	S							0	0	8			.128
8.	IRU Σ(ΔΦ pulses: ZM2 byte 2) (ACE A)	S							0	8	8			.128
8.	IRU Σ(ΔΦ pulses: XM1 byte 3) (ACE A)	S							1	0	8			.128
8.	IRU Σ(ΔΦ pulses: YM1 byte 3) (ACE A)	S							1	8	8			.128
8.	IRU Σ(ΔΦ pulses: ZM1 byte 3) (ACE A)	S							2	0	8			.128
8.	IRU Σ(ΔΦ pulses: XM2 byte 3) (ACE A)	S							2	8	8			.128

Note	Telemetry Point	Type	Board Address	Telemetry channel	Minor	Modulo	Window	Table #	Data Word	Start MSB	Length Bits	H&S Rate	H/K Rate	SCC Rate
8.	IRU Σ(ΔΦ pulses: YM2 byte 3) (ACE A)	S							3	0	8			.128
8.	IRU Σ(ΔΦ pulses: ZM2 byte 3) (ACE A)	S							3	8	8			.128
8.	IRU Σ(ΔΦ pulses: XM1 byte 2) (ACE B)	S							4	0	8			.128
8.	IRU Σ(ΔΦ pulses: YM1 byte 2) (ACE B)	S							4	8	8			.128
8.	IRU Σ(ΔΦ pulses: ZM1 byte 2) (ACE B)	S							5	0	8			.128
8.	IRU Σ(ΔΦ pulses: XM2 byte 2) (ACE B)	S							5	8	8			.128
8.	IRU Σ(ΔΦ pulses: YM2 byte 2) (ACE B)	S							6	0	8			.128
8.	IRU Σ(ΔΦ pulses: ZM2 byte 2) (ACE B)	S							6	8	8			.128
8.	IRU Σ(ΔΦ pulses: XM1 byte 3) (ACE B)	S							7	0	8			.128
8.	IRU Σ(ΔΦ pulses: YM1 byte 3) (ACE B)	S							7	8	8			.128
Redlines from Elliot dated 7/30/93														

2.1.3 BDU Sample Schedule table 2.1.3

SS table	tlm sync hs	Rate	SS table		Gather		H/K			H&S			SCC		
			# msg in EOS min	16–bit word count	# msg in EOS min	16–bit word count	inef-fi-cien-cies	word counts	total 16bit word in 65.536	inef-fi-cien-cies	word counts	total 16bit word in 65.536	inef-fi-cien-cies	word counts	total 16bit word in 65.536
GN &C 2.1.3	0	.128	512	10	384	2							N		768

GN &C 2.1.3	0	.512			128	5							N		640

Total tlm gathers is@.128 is 8 per major cycles @ 5 16–bit words. 512 gathers per master cycle
Total tlm gathers is@.512 is 2 per major cycles @ 5 16–bit words. 128 gathers per master cycle
Each time sample table is sent its word count=10
6/8 of times per major cycle only word count of 2 gathered
2/8 of times per major cycle only word count of 5 gathered

Note	Telemetry Point	Type	Board Address	Telemetry channel	Minor	Modulo	Window	Table #	Data Word	Start MSB	Length Bits	H&S Rate	H/K Rate	SCC Rate
8.	IRU Σ(ΔΦ pulses: ZM1 byte 3) (ACE B)	S							0	0	8			.128
8.	IRU Σ(ΔΦ pulses: XM2 byte 3) (ACE B)	S							0	8	8			.128
8.	IRU Σ(ΔΦ pulses: YM2 byte 3) (ACE B)	S							1	0	8			.128
8.	IRU Σ(ΔΦ pulses: ZM2 byte 3) (ACE B)	S							1	8	8			.128
5., 8.	TAM 1 ~~Field Strength~~ X–axis signal	AA							2	0	8	1/64	1/8	.512
5. 8.	TAM 1 ~~Field Strength~~ Y–axis signal	AA							2	8	8	1/64	1/8	.512
5., 8.	TAM 1 ~~Field Strength~~ Z–axis signal	AA							3	0	8	1/64	1/8	.512
5., 8.	TAM 2 ~~Field Strength~~ X–axis signal	AA							3	8	8	1/64	1/8	.512
5., 8.	TAM 2 ~~Field Strength~~ Y–axis signal	AA							4	0	8	1/64	1/8	.512
5. 8.	TAM 2 ~~Field Strength~~ Z–axis signal	AA							4	8	8	1/64	1/8	.512

notes:
from both DN–GN&C–039–Rev A. and DN–RES–027
one BDU sample schedule for SCC closed loop and one for telemetry

Redlines from Elliot dated 7/30/93

2.1.4 BDU Sample Schedule table 2.1.4

SS table	tlm sync hs	Rate	SS table		Gather		H/K			H&S			SCC		
			# msg in EOS min	16–bit word count	# msg in EOS min	16–bit word count	inef-fi-cien-cies	word counts	total 16bit word in 65.536	inef-fi-cien-cies	word counts	total 16bit word in 65.536	inef-fi-cien-cies	word counts	total 16bit word in 65.536
GN &C 2.1.4	0	.512	128	16	128	8							N	16	1024
Total tlm gathers is 2 per major cycles @ eight 16–bit words. 128 gathers per master cycle															

Note	Telemetry Point	Type	Board Address	Telemetry channel	Minor	Modulo	Window	Table #	Data Word	Start MSB	Length Bits	H&S Rate	H/K Rate	SCC Rate
8.	RWA Σ(2.1.4 pulses: RWA 1, byte 1) (ACE A)	S							0	0	8			.512
8.	RWA Σ(Tach pulses: RWA 2, byte 1) (ACE A)	S							0	8	8			.512
8.	RWA Σ(Tach pulses: RWA 3, byte 1) (ACE A)	S							1	0	8			.512
8.	RWA Σ(Tach pulses: RWA 4, byte 1) (ACE A)	S							1	8	8			.512
8.	RWA Σ(Tach pulses: RWA 1, byte 2) (ACE A)	S							2	0	8			.512
8.	RWA Σ(Tach pulses: RWA 2, byte 2) (ACE A)	S							2	8	8			.512
8.	RWA Σ(Tach pulses: RWA 3, byte 2) (ACE A)	S							3	0	8			.512
8.	RWA Σ(Tach pulses: RWA 4, byte 2) (ACE A)	S							3	8	8			.512
8.	RWA Σ(Tach pulses: RWA 1, byte 1) (ACE B)	S							4	0	8			.512
8.	RWA Σ(Tach pulses: RWA 2, byte 1) (ACE B)	S							4	8	8			.512
8.	RWA Σ(Tach pulses: RWA 3, byte 1) (ACE B)	S							5	0	8			.512
8.	RWA Σ(Tach pulses: RWA 4, byte 1) (ACE B)	S							5	8	8			.512
8.	RWA Σ(Tach pulses: RWA 1, byte 2) (ACE B)	S							6	0	8			.512

Note	Telemetry Point		Board Address	Telemetry channel	Minor	Modu-lo	Window	Table #	Data Word	Start MSB	Bits	Rate	Rate	Rate
8.	RWA Σ(Tach pulses: RWA 2, byte 2) (ACE B)	S							6	8	8			.512
8.	RWA Σ(Tach pulses: RWA 3, byte 2) (ACE B)	S							7	0	8			.512
8.	RWA Σ(Tach pulses: RWA 4, byte 2) (ACE B)	S							7	8	8			.512
Redlines from Elliot dated 7/30/93														

2.2 H/K and/or H&S Telemetry

2.2.1 BDU Sample Schedule Table 2.2.1

SS table	tlm sync hs	Rate	SS table		Gather		H/K			H&S			SCC		
			# msg in EOS min	16–bit word count	# msg in EOS min	16–bit word count	inef-fi-cien-cies	word counts	total 16bit word in 65.536	inef-fi-cien-cies	word counts	total 16bit word in 65.536	inef-fi-cien-cies	word counts	total 16bit word in 65.536
GN &C 2.2.1	0	1/8	8	16	8	8	N	8	64						
GN &C 2.2.1		1/8								N	8	64			
Total tlm gathers one every 8 major cycles @ eight 16–bit words. 8 gathers per master cycle															

NOTE	Telemetry Point	Type	Board Address	Telemetry channel	Minor	Modulo	Window	Table #	Data Word	Start MSB	Length Bits	H&S Rate	H/K Rate	SCC Rate
2.	CSS1,Y Posn Error Sig	AA							0	0	16	1/8	1/8	
2.	CSS 1,Z Posn Error Sig	AA							1	0	16	1/8	1/8	
2.	CSS 2,Y Posn Error Sig	AA							2	0	16	1/8	1/8	
2.	CSS 2,Z Posn Error Sig	AA							3	0	16	1/8	1/8	
2.	RWA1 Tach A Count	AA							4	0	8	1/8	1/8	
2.	RWA2 Tachcontrol A Count	AA							4	8	8	1/8	1/8	
2.	RWA3 Tach A Count	AA							5	0	8	1/8	1/8	
2.	RWA4 Tach A Count	AA							5	8	8	1/8	1/8	
2.	RWA1 Tach B Count	AA							6	0	8	1/8	1/8	
2.	RWA2 Tach B Count	AA							6	8	8	1/8	1/8	
2.	RWA3 Tach B Count	AA							7	0	8	1/8	1/8	
2.	RWA4 Tach B Count	AA							7	8	8	1/8	1/8	
Redlines from Elliot dated 7/30/93														

2.2.2 BDU Sample Schedule Table 2.2.2

Sample Schedule Table	Rate	tlm synchs	SSTABLE		GATHER		H/K			H&S			SCC		
			# in EOS min	16–bit data words	# in EOS min	16–bit data words	inef-fi-cien-cies	word counts	total 16bit word in 65.536	inef-fi-cien-cies	word counts	total 16bit word in 65.536	inef-fi-cien-cies	word counts	total 16bit word in 65.536
GN&C 2.2.2	1/8	2	8	16	8	7	N	7	56						
GN&C 2.2.2	1/64	2								N	7	56			
Total tlm gathers one every 8 major cycles															

Note	Telemetry Point	Type	Board Address	Telemetry channel	Minor	Modulo	Window	Table #	Data Word	Start MSB	Length Bits	H&S Rate	H/K Rate	SCC Rate
1.	ACE A Telemetry Synch 1B	1/8							–	–	–	–	–	

Note	Telemetry Point	Type	Board Address	Telemetry channel	Minor	Modulo	Window	Table #	Data Word	Start MSB	Length Bits	H&S Rate	H/K Rate	SCC Rate
1.	ACE B Telemetry Synch 1B	1/8							–	–	–	–	–	
2.	TAM 1 ~~Field Strength~~ X-axis signal	AA							0	0	8	1/64	1/8	.512
2.	TAM 1 ~~Field Strength~~ Y-axis signal	AA							0	8	8	1/64	1/8	.512
2.	TAM 1 ~~Field Strength~~ Z-axis signal	AA							1	0	8	1/64	1/8	.512
2.	TAM 2 ~~Field Strength~~ X-axis signal	AA							1	8	8	1/64	1/8	.512
2.	TAM 2 ~~Field Strength~~ Y-axis signal	AA							2	0	8	1/64	1/8	.512
2.	TAM 2 ~~Field Strength~~ Z-axis signal	AA							2	8	8	1/64	1/8	.512
2.	~~TAM 1 Field Strenght (all axes) see following~~	AA							–	–	24	1/64	1/8	
2.	~~TAM2 Field Strenght (all axes) see following~~	AA							–	–	24	1/64	1/8	
?	TAM X axis signal ACE A	AA							–	–	8			
?	TAM Y axis signal ACE A	AA							–	–	8			
?	TAM Z axis signal ACE A	AA							–	–	8			
?	TAM X axis signal ACE B	AA							–	–	8			
?	TAM Y axis signal ACE B	AA							–	–	8			
?	TAM Z axis signal ACE B	AA							–	–	8			
Per Elliott redline: he had noted telemetry missing. Is the above the same as TAM field strength appears in both the SCC closed loop and telemetry downlinks. Until clarified assume they are identical.														
5.	TAM-1A temperature (electronics & sensor)	AA							3	0	8	1/64	1/8	
5.	TAM-1B temperature (electronics & sensor)	AA							3	8	8	1/64	1/8	
5.	TAM-2A temperature (electronics & sensor)	AA							4	0	8	1/64	1/8	
5.	TAM-2B temperature (electronics & sensor)	AA							4	8	8	1/64	1/8	
2.	ACE A +5, 15 Reg Voltage GNC_VR_ACEA_P5VREG	AA							5	0	8	1/64	1/8	
2.	ACE B +5, 15 Reg Voltage GNC_VR_ACEB_P5VREG	AA							5	8	8	1/64	1/8	
2.	ACE A –15, 28 Reg Voltage GNC_VR_ACEA_P28VREG	AA							6	0	8	1/64	1/8	
2.	ACE B –15, 28 Reg Voltage GNC_VR_ACEB_P28VREG	AA							6	8	8	1/64	1/8	
Redlines from Elliot dated 7/30/93														

2.2.3 BDU Sample Schedule Table 2.2.3

Sample Schedule Table	Rate	tlm synchs	SSTABLE		GATHER		H/K			H&S			SCC		
			# in EOS min	16-bit data words	# in EOS min	16-bit data words	inefficiencies	word counts	total 16bit word in 65.536	inefficiencies	word counts	total 16bit word in 65.536	inefficiencies	word counts	total 16bit word in 65.536
GN&C 2.2.3	1/8	2	8	16	8	7	Y	7	56						
GN&C 2.2.3	1/64	2								Y	7	56			

8 times sample; 8 times gather; 7/8 only to H/K; 1/8 to both H/K & H&S

INEFFICIENCIES:
Each tlm gather has reserved bits (PB) in them

NOTE	Telemetry Point	Type	Board Address	Telemetry channel	Minor	Modulo	Window	Table #	Data Word	Start MSB	Length Bits	H&S Rate	H/K Rate	SCC Rate
2.	ACE A Telemetry Synch 1a	1/8							–	–	–	–	–	
2.	ACE B Telemetry Synch 1a	1/8							–	–	–	–	–	
2.	ACE A on/ACE B off GNC_BR_ACE_AONBOFF	AB							0	0	1	1/64	1/8	
2.	TAM 1 Power on/off GNC_BR_ACE_TAM1_ON	AB							0	1	1	1/64	1/8	
2.	TAM 2 Power onoff GNC_BR_ACE_TAM2_ON	AB							0	2	1	1/64	1/8	
2.	CSM A Timer State	AB							0	3	1	1/64	1/8	
2.	CSM B Timer State	AB							0	4	1	1/64	1/8	
2.	CSM A Inhibit	AB							0	5	1	1/64	1/8	
2.	CSM B Inhibit	AB							0	6	1	1/64	1/8	
	Reserved	AB							0	7	1	1/64	1/8	
4.	SSST-1 Power Status	PB								8	1	1/64	1/8	
4.	SSST-1 Heater relay status	PB								9	1	1/64	1/8	
5.	TAM-1A Heater relay status (electronics & sensor)	PB								10	1	1/64	1/8	
5.	TAM-2A Heater relay status (electronics & sensor)	PB								11	1	1/64	1/8	

NOTE	Telemetry Point	Type	Board Address	Telemetry channel	Minor	Modulo	Window	Table #	Data Word	Start MSB	Length Bits	H&S Rate	H/K Rate	SCC Rate
7.	PSU EPC on/off status1	PB								12	1	1/64	1/8	
7.	PSU Star Tracker Power relay status1	PB								13	1	1/64	1/8	
7.	PSU Earth Sensor Elec. (ESE) Power Relay Status 1	PB								14	1	1/64	1/8	
3.	IRU Heater control Relay Status 1	PB								15	1	1/64	1/8	
4.	SSST–2 Power Status	PB							1	0	1	1/64	1/8	
4.	SSST–2 Heater relay status	PB								1	1	1/64	1/8	
5.	TAM–1B Heater relay status (electronics & sensor)	PB								2	1	1/64	1/8	
5.	TAM–2B Heater relay status (electronics & sensor)	PB								3	1	1/64	1/8	
7.	PSU EPC on/off status2	PB								4	1	1/64	1/8	
7.	PSU Star Tracker Power relay status2	PB								5	1	1/64	1/8	
7.	PSU Earth Sensor Elec. (ESE) Power Relay Status 2	PB								6	1	1/64	1/8	
3.	IRU Heater control Relay Status 2	PB								7	1	1/64	1/8	
7.	PSU IRU Power relay status 1	PB								8	1	1/64	1/8	
7.	PSU IRU Power relay status 2	PB								9	1	1/64	1/8	
7.	PSU IRU Power relay status 3	PB								10	1	1/64	1/8	
7.	PSU Fine Sun Sensor Electronics Power Relay status	PB								11	1	1/64	1/8	
3.	IRU Pulse rate mode (high/low) A	PB								12	1	1/64	1/8	
3.	IRU Pulse rate mode (high/low) B	PB								13	1	1/64	1/8	
3.	IRU Pulse rate mode (high/low) C	PB								14	1	1/64	1/8	
	reserved	PB								15	1	1/64	1/8	
3.	~~IRU Channel status (on/off) 1 per elliott no such tlm from IRU only from PSU~~	PB							2	0	1	1/64	1/8	
3.	~~IRU Channel status (on/off) 2 per elliott no such tlm from IRU only from PSU~~	PB								1	1	1/64	1/8	
3.	~~IRU Channel status (on/off) 3 per elliott no such tlm from IRU only from PSU~~	PB								2	1	1/64	1/8	
5.	~~TAM–1 magnetometer Status (on/off) per Elliott no such in TAM only in ACE~~	PB								3	1	1/64	1/8	

NOTE	Telemetry Point	Type	Board Address	Telemetry channel	Minor	Modulo	Window	Table #	Data Word	Start MSB	Length Bits	H&S Rate	H/K Rate	SCC Rate
5.	~~TAM 2 magnetometer Status (on/off) per Elliott no such in TAM only in ACE~~	PB								4	1	1/64	1/8	
1.	BDU–GN&C Heater Control Relay Status2	PB								5	1	1/64	1/8	
1.	BDU–GN&C Heater Control Relay Status2	PB								6	1	1/64	1/8	
	reserved	PB								7	1	1/64	1/8	
3.	IRU Voltages A	AA							2		8	1/64	1/8	
3.	IRU Voltages B	AA							3		8	1/64	1/8	
3.	IRU Voltages C	AA									8	1/64	1/8	
2.	ACE A +15 Reg Voltage GNC_VR_ACEA_P15VREG	AA							4		8	1/64	1/8	
2.	ACE B +15 Reg Voltage GNC_VR_ACEB_P15VREG	AA									8	1/64	1/8	
2.	ACE A EPC input current1	AA							5		8	1/64	1/8	
2.	ACE B EPC input current1	AA									8	1/64	1/8	
1.	BDU–GN&C EPC i/p current1	AA							6		8	1/64	1/8	
1.	BDU–GN&C EPC i/p current2	AA									8	1/64	1/8	
Redlines from Elliot dated 7/30/93: decided to leave the data in to remain in keeping with the snapshot														

2.2.4 BDU Sample Schedule Table 2.2.4

Sample Schedule Table	Rate	tlm sync hs	SSTABLE		GATHER		H/K			H&S			SCC		
			# in EOS min	16–bit data words	# in EOS min	16–bit data words	inef-fi-cien-cies	word counts	total 16bit word in 65.536	inef-fi-cien-cies	word counts	total 16bit word in 65.536	inef-fi-cien-cies	word counts	total 16bit word in 65.536
GN&C 2.2.4	1/64	0	1	14	1	7	Y	7	7						

GN &C 2.2.4	1/64	0								Y	7	7			

1 times sample; 1 times gather;

INEFFICIENCIES:
Each tlm gather has reserved bits (PB) in them

Note	Telemetry Point	Type	Board Address	Telemetry channel	Minor	Modulo	Window	Table #	Data Word	Start MSB	Length Bits	H&S Rate	H/K Rate	SCC Rate
2.	Card Cage Temperature – ACE A	PA							0		8	1/64	1/64	
2.	Card Cage Temperature – ACE B	PA							0		8	1/64	1/64	
2.	~~ACE Power Cond Temp per Elliott should be this and should be two~~ ACE A EPC Temp Monitor	PA							1		8	1/64	1/64	
2.	ACE B EPC Temp Monitor	PA							1		8	1/64	1/64	
2.	~~Torque~~ MTR Dirve Elec Temp – ACE A	PA							2		8	1/64	1/64	
2.	~~Torque~~ MTR Dirve Elec Temp – ACE B	PA							2		8	1/64	1/64	
6.	CSS–1 temperature	PA							3		8	1/64	1/64	
7.	PSU EPC temperature2	PA							3		8	1/64	1/64	
7.	PSU EPC temperature1	PA							4		8	1/64	1/64	
6.	CSS–1 Heater control relay status	PB							4	8	1	1/64	1/64	
6.	CSS–2 Heater control relay status	PB								9	1	1/64	1/64	
	Reserved									10–15	6	1/64	1/64	
4.	SSST–1 Tracker Temperature	PA							5		8	1/64	1/64	
4.	SSST–2 Tracker Temperature	PA							5		8	1/64	1/64	
1.	BDU–GN&C Temperature1	PA							6		8	1/64	1/64	
1.	BDU–GN&C Temperature2	PA							6		8	1/64	1/64	

Redlines from Elliot dated 7/30/93

2.2.5 BDU Sample Schedule Table 2.2.5

Sample Schedule Table	Rate	tlm sync hs	SSTABLE		GATHER		H/K			H&S			SCC		
			# in EOS min	16–bit data words	# in EOS min	16–bit data words	inef-fi-cien-cies	word counts	total 16bit word in 65.536	inef-fi-cien-cies	word counts	total 16bit word in 65.536	inef-fi-cien-cies	word counts	total 16bit word in 65.536
GN &C 2.2.5	1/1	0	64	16	64	8	N	8	512						
GN &C 2.2.5	1/8	0								N	8	64			
64 times sample; 63/64 h/K only; 1/64 both H/K & H&S INEFFICIENCIES:															

Note	Telemetry Point	Type	Board Address	Telemetry channel	Minor	Modulo	Window	Table #	Data Word	Start MSB	Length Bits	H&S Rate	H/K Rate	SCC Rate
2	IRU X safe hold posn – ACE A	AA							0		8	1/8	1/1	
2	IRU X safe hold posn – ACE B	AA							0		8	1/8	1/1	
2	IRU Y safe hold posn – ACE A	AA							1		8	1/8	1/1	
2	IRU Y safe hold posn – ACE B	AA							1		8	1/8	1/1	
2	IRU Z safe hold posn – ACE A	AA							2		8	1/8	1/1	
2	IRU Z safe hold posn – ACE B	AA							2		8	1/8	1/1	
2.	~~Torque~~ MTR X Drive A Current ~~A~~ GNC_IR_TORQ_DRVX_A	AA							3		8	1/8	1/8	
2.	~~Torque~~ MTR X B Drive Current ~~B~~ GNC_IR_TORQ_DRVX_B	AA							3		8	1/8	1/8	
2.	~~Torque~~ MTR Y Drive A Current ~~A~~ GNC_IR_TORQ_DRVY_A	AA							4		8	1/8	1/8	
2.	~~Torque~~ MTR Y B Drive Current ~~B~~ GNC_IR_TORQ_DRVY_B	AA							4		8	1/8	1/8	
2.	~~Torque~~ MTR Z Drive A Current ~~A~~ GNC_IR_TORQ_DRVZ_A	AA							5		8	1/8	1/8	
2.	~~Torque~~ MTR Z Drive B Current ~~B~~ GNC_IR_TORQ_DRVZ_B	AA							5		8	1/8	1/8	
2.	RWA1 Drive Control Voltage1	AA							6		8	1/8	1/8	
2.	RWA2 Drive Control Voltage2	AA							6		8	1/8	1/8	
2.	RWA3 Drive Control Voltage3	AA							7		8	1/8	1/8	
2.	RWA3 Drive Control Voltage4	AA							7		8	1/8	1/8	

2.2.6 BDU Sample Schedule Table 2.2.6

Sample Schedule Table	Rate	tlm sync hs	SSTABLE		GATHER		H/K			H&S			SCC		
			# in EOS min	16–bit data words	# in EOS min	16–bit data words	inef-fi-cien-cies	word counts	total 16bit word in 65.536	inef-fi-cien-cies	word counts	total 16bit word in 65.536	inef-fi-cien-cies	word counts	total 16bit word in 65.536
GN&C 2.2.6	1/1	0	64	6	64	3	N	3	192						

GN &C 2.2.6	1/1	0								N	3	192			
64 times sample; 63/64 h/K only; 1/64 both H/K & H&S INEFFICIENCIES:															

Note	Telemetry Point	Type	Board Address	Telemetry channel	Minor	Modulo	Window	Table #	Data Word	Start MSB	Length Bits	H&S Rate	H/K Rate	SCC Rate
2.	IRU ~~Rate Channel XA~~ XM (roll) rate 1 [1]	AA							0		8	1/1	1/1	
2.	IRU ~~Rate Channel XB~~ YM (pitch) rate 1 [1]	AA							0		8	1/1	1/1	
2.	IRU ~~Rate Channel YA~~ ZM ((yaw) rate 1 [1]	AA							1		8	1/1	1/1	
2.	IRU ~~Rate Channel YB~~ XM (roll) rate 2 [1]	AA							1		8	1/1	1/1	
2.	IRU ~~Rate Channel ZA~~ YM (pitch) rate 2 [1]	AA							2		8	1/1	1/1	
2.	IRU ~~Rate Channel ZB~~ ZM (yaw) rate 2 [1]	AA							2		8	1/1	1/1	

2.2.7 BDU Sample Schedule Table 2.2.7

Sample Schedule Table	Rate	tlm sync hs	SSTABLE		GATHER		H/K			H&S			SCC		
			# in EOS min	16–bit data words	# in EOS min	16–bit data words	inef-fi-cien-cies	word counts	total 16bit word in 65.536	inef-fi-cien-cies	word counts	total 16bit word in 65.536	inef-fi-cien-cies	word counts	total 16bit word in 65.536
GN &C 2.2.7	1/1	0	64	6	64	3	N	3	192						
GN &C 2.2.7	1/64	0								N	3	192			
64 times sample; 63/64 h/K only; 1/64 both H/K & H&S INEFFICIENCIES:															

Note	Telemetry Point	Type	Board Address	Telemetry channel	Minor	Modulo	Window	Table #	Data Word	Start MSB	Length Bits	H&S Rate	H/K Rate	SCC Rate
3.	IRU Motor Current1	AA							0		8	1/64	1/1	
3.	IRU Motor Current2	AA							0		8	1/64	1/1	
3.	IRU Motor Current3	AA							1		8	1/64	1/1	
3.	IRU Gyro temperature A	PA							1		8	1/64	1/64	
3.	IRU Gyro temperature B	PA							2		8	1/64	1/64	
3.	IRU Gyro temperature C	PA							2		8	1/64	1/64	

2.2.8 BDU Sample Schedule Table 2.2.8

Sample Schedule Table	Rate	tlm sync hs	SSTABLE		GATHER		H/K			H&S			SCC		
			# in EOS min	16–bit data words	# in EOS min	16–bit data words	inef-fi-cien-cies	word counts	total 16bit word in 65.536	inef-fi-cien-cies	word counts	total 16bit word in 65.536	inef-fi-cien-cies	word counts	total 16bit word in 65.536
GN&C 2.2.6	1/8	0	8	16	8	8	N	8	64						
GN&C 2.2.6	1/64	0								N	8	8			
8 times sample; 7/8 h/K only; 1/8 both H/K & H&S INEFFICIENCIES:															

Note	Telemetry Point	Type	Board Address	Telemetry channel	Minor	Modulo	Window	Table #	Data Word	Start MSB	Length Bits	H&S Rate	H/K Rate	SCC Rate
2.	ACE A Componet Status Data	S								0	16	1/8	1/8	
2.	ACE B Componet Status Data	S								1	16	1/8	1/8	
2.	ACE A Safe Mode Elec Status	S								2	16	1/8	1/8	
2.	ACE A Safe Mode Elec Status	S								3	8	1/8	1/8	
2.	ACE B Safe Mode Elec Status	S								3	8	1/8	1/8	
2.	ACE B Safe Mode Elec Status	S								4	16	1/8	1/8	
2.	ACE A Auxilliary Status	S								5	16	1/8	1/8	
2.	ACE A Auxilliary Status	S								6	8	1/8	1/8	
2.	ACE B Auxilliary Status	S								6	8	1/8	1/8	
2.	ACE B Auxilliary Status	S								7	16	1/8	1/8	

2.2.9 BDU Sample Schedule Table 2.2.9

This is a point–to–point serial I/O interface. ACE A and ACE B each have one. The subparagraphs describe the sampling/gathering in regard to this interface. The following table is used only to show the overall point–to–point interface.

This is for only one of the 6 bdu sample schedule tables for bus traffic
however; only one table need be resident in storage since one would be identical to the other

Sample Schedule Table	Rate	tim sync hs	SSTABLE		GATHER		H/K			H&S			SCC		
			# in EOS min	16–bit data words	# in EOS min	16–bit data words	inef-fi-cien-cies	word counts	total 16bit word in 65.536	inef-fi-cien-cies	word counts	total 16bit word in 65.536	inef-fi-cien-cies	word counts	total 16bit word in 65.536
GN &C 2.2.9	1/8	0	8	16	8	8	N	8	64						
GN &C 2.2.9	1/8	0								N	8	64			

8 times sample; 8/8 h/K both H/K & H&S There are 6 such tables.

INEFFICIENCIES:

Note	Telemetry Point	Type	Board Address	Telemetry channel	Minor	Modulo	Window	Table #	Data Word	Start MSB	Length Bits	H&S Rate	H/K Rate	SCC Rate
2.	ACE A Safe Hold Digital processor Data	S									384	1/8	1/8	
2.	ACE B Safe Hold Digital processor Data	S									384	1/8	1/8	
This has to be handled carefully. First enable must occur not earlier than 1.032 seconds after the ACE TLM sync. 48th byte must be gathered before next ACE tlm sync. This can be handled in different ways. It will take 3 BDU sample schedule tables (@ 16 enteries per table) to readout a single ACE and it must be done before that ACE receives another telemetry synch. TLM syncs to an ACE are spaced at 4 EOS seconds.														

2.2.9.1 BDU Sample Schedule Table 2.2.9.1

Note	Telemetry Point	Type	Board Address	Telemetry channel	Minor	Modulo	Window	Table #	Data Word	Start MSB	Length Bits	H&S Rate	H/K Rate	SCC Rate
2.	ACE A Safe Hold Digital processor Data Part 1 of 6	S							0–3	0	64	1/8	1/8	
2.	ACE B Safe Hold Digital processor Data Part 1 of 6	S							4–7	0	64	1/8	1/8	
Redlines from Elliot dated 7/30/93														

2.2.9.2 BDU Sample Schedule Table 2.2.9.2

Note	Telemetry Point	Type	Board Address	Telemetry channel	Minor	Modulo	Window	Table #	Data Word	Start MSB	Length Bits	H&S Rate	H/K Rate	SCC Rate
2.	ACE A Safe Hold Digital processor Data Part 2 of 6	S							0–3	0	64	1/8	1/8	
2.	ACE B Safe Hold Digital processor Data Part 2 of 6	S							4–7	0	64	1/8	1/8	
Redlines from Elliot dated 7/30/93														

2.2.9.3 BDU Sample Schedule Table 2.2.9.3

Note	Telemetry Point	Type	Board Address	Telemetry channel	Minor	Modulo	Window	Table #	Data Word	Start MSB	Length Bits	H&S Rate	H/K Rate	SCC Rate
2.	ACE A Safe Hold Digital processor Data Part 3 of 6	S							0–3	0	64	1/8	1/8	
2.	ACE B Safe Hold Digital processor Data Part 3 of 6	S							4–7	0	64	1/8	1/8	
Redlines from Elliot dated 7/30/93														

2.2.9.4 BDU Sample Schedule Table 2.2.9.4

Note	Telemetry Point	Type	Board Address	Telemetry channel	Minor	Modulo	Window	Table #	Data Word	Start MSB	Length Bits	H&S Rate	H/K Rate	SCC Rate
2.	ACE A Safe Hold Digital processor Data Part 4 of 6	S							0–3	0	64	1/8	1/8	
2.	ACE B Safe Hold Digital processor Data Part 4 of 6	S							4–7	0	64	1/8	1/8	

2.2.9.5 BDU Sample Schedule Table 2.2.9.5

Note	Telemetry Point	Type	Board Address	Telemetry channel	Minor	Modulo	Window	Table #	Data Word	Start MSB	Length Bits	H&S Rate	H/K Rate	SCC Rate
2.	ACE A Safe Hold Digital processor Data Part 5 of 6	S							0–3	0	64	1/8	1/8	
2.	ACE B Safe Hold Digital processor Data Part 5 of 6	S							4–7	0	64	1/8	1/8	
Redlines from Elliot dated 7/30/93														

2.2.9.6 BDU Sample Schedule Table 2.2.9.6

Note	Telemetry Point	Type	Board Address	Telemetry channel	Minor	Modulo	Window	Table #	Data Word	Start MSB	Length Bits	H&S Rate	H/K Rate	SCC Rate
2.	ACE A Safe Hold Digital processor Data Part 6 of 6	S							0–3	0	64	1/8	1/8	
2.	ACE B Safe Hold Digital processor Data Part 6 of 6	S							4–7	0	64	1/8	1/8	
Redlines from Elliot dated 7/30/93														

2.2.10 BDU Sample Schedule Table 2.2.10

Sample Schedule Table	Rate	tlm sync hs	SSTABLE		GATHER		H/K			H&S			SCC		
			# in EOS min	16–bit data words	# in EOS min	16–bit data words	inefficiencies	word counts	total 16bit word in 65.536	inefficiencies	word counts	total 16bit word in 65.536	inefficiencies	word counts	total 16bit word in 65.536
GN &C 2.2.10	1/8	0	8	2	8	1	N	1	8						
GN &C 2.2.10	–														
8 times sample; 8/8 h/K both H/K & H&S There are 6 such tables. INEFFICIENCIES:															

Note	Telemetry Point	Type	Board Address	Telemetry channel	Minor	Modulo	Window	Table #	Data Word	Start MSB	Length Bits	H&S Rate	H/K Rate	SCC Rate
7.	PSU EPC input current1	AA							0		8	–	1/8	
7.	PSU EPC input current2	AA							0		8	–	1/8	

3 Power BDU

Note Column:

1. EOS–DN–RES–027 1.2.6.1 PWR—BDU
2. EOS–DN–RES–027 1.2.7.7 GN&C—Magnetic Torque Rods (MTR)
3. EOS–DN–RES–027 1.2.7.9 GN&C—Fine Sun Sensor (FSS)
4. EOS–DN–RES–027 1.2.9.3 EPS—Power Distribution Unit (PDU)
5. EOS–DN–RES–027 1.2.9.4 EPS—Power Battery Conditioner (BPC)
6. EOS–DN–RES–027 1.2.9.4 EPS—Power Battery Conditioner (BPC)
7. EOS–DN–RES–027 1.2.9.5 EPS—Battery Interfaces
8. EOS–DN–RES–027 1.2.10.3 HGA Pyro telemetry
9. DN–GN&C–039–Rev A.

Journal

FSS Journal:

Aug 12, 1993
Talked with Mariann—She will talk with vendor and confirm next 250 usec window can do readout of serial buffer

3.2.9 and 3.1.1 both access the same FSS telemetry data could table 3.1.1 be used only

Journal

Questions to ask:

Footnotes:

[1]

3.1 SCC Closed Loop

3.1.1 BDU Sample Schedule Table 3.1.1

Sample Schedule Table	Rate	tlm sync hs	SSTABLE		GATHER		H/K			H&S			SCC		
			# in EOS min	16–bit data words	# in EOS min	16–bit data words	inef-fi-cien-cies	word counts	total 16bit word in 65.536	inef-fi-cien-cies	word counts	total 16bit word in 65.536	inef-fi-cien-cies	word counts	total 16bit word in 65.536
PWR 3.1.1	.512	1	128	5	128	2								2	256

INEFFICIENCIES:

Note	Telemetry Point	Type	Board Address	Telemetry channel		Modulo	Window	Table #	Data Word	Start MSB	Length Bits	H&S Rate	H/K Rate	SCC Rate
9.	TLM SYNCH													
3.9.	FSS Sun angles & presence data 1	S									8	–	1/8	.512
3.9.	FSS Sun angles & presence data 2	S									8	–	1/8	.512
3.9.	FSS Sun angles & presence data 3	S									8	–	1/8	.512
3.9.	FSS Sun angles & presence data 4	S									8	–	1/8	.512

3.2 Telemetry

3.2.1 · BDU Sample Schedule Table 3.2.1

Sample Schedule Table	Rate	tlm sync hs	SSTABLE		GATHER		H/K			H&S			SCC		
			# in EOS min	16–bit data words	# in EOS min	16–bit data words	inefficiencies	word counts	total 16bit word in 65.536	inefficiencies	word counts	total 16bit word in 65.536	inefficiencies	word counts	total 16bit word in 65.536
PWR 3.2.1	1/1	0	64	12	64	6	N	6	384						
PWR 3.2.1	1/8									N	6	48			

INEFFICIENCIES:

Note	1 prime 2 redundant Telemetry Point	Type	Board Address	Telemetry channel		Modulo	Window	Table #	Data Word	Start MSB	Length Bits	H&S Rate	H/K Rate	SCC Rate
4.	PDU Bus Voltage Full Range1	AA							0		8	1/8	1/1	
4.	PDU Bus Voltage Full Range2	AA							0		8	1/8	1/1	
4.	PDU Bus Voltage, Expanded Range1	AA							1		8	1/8	1/1	
4.	PDU Bus Voltage, Expanded Range2	AA							1		8	1/8	1/1	
4.	PDU SA Load Current1	AA							2		8	1/8	1/1	
4.	PDU SA Load Current2	AA							2		8	1/8	1/1	
4.	PDU Battery 1 Charge Current	AA							3		8	1/8	1/1	
4.	PDU Battery 2 Charge Current	AA							3		8	1/8	1/1	
4.	PDU Battery 1 Discharge Current	AA							4		8	1/8	1/1	
4.	PDU Battery 2 Discharge Current	AA							4		8	1/8	1/1	
4.	PDU Battery 1 Voltage1	AA							5		8	1/8	1/1	
4.	PDU Battery 1 Voltage2	AA							5		8	1/8	1/1	
4.	PDU Battery 2 Voltage1	AA							6		8	1/8	1/1	
4.	PDU Battery 2 Voltage2	AA							6		8	1/8	1/1	

3.2.2 BDU Sample Schedule Table 3.2.2

Sample Schedule Table	Rate	tlm sync hs	SSTABLE		GATHER		H/K			H&S			SCC		
			# in EOS min	16–bit data words	# in EOS min	16–bit data words	inefficiencies	word counts	total 16bit word in 65.536	inefficiencies	word counts	total 16bit word in 65.536	inefficiencies	word counts	total 16bit word in 65.536
PWR 3.2.2	1/1	0	64	16	63	7	Y	7	448						
PWR 3.2.2	1/64				1	8				Y	8	8			
INEFFICIENCIES: PB reserved															

Note	1 prime 2 redundant Telemetry Point	Type	Board Address	Telemetry channel		Modulo	Window	Table #	Data Word	Start MSB	Length Bits	H&S Rate	H/K Rate	SCC Rate

Note	1 prime 2 redundant Telemetry Point	Type	Board Address	Telemetry channel		Modulo	Window	Table #	Data Word	Start MSB	Length Bits	H&S Rate	H/K Rate	SCC Rate
4.	PDU Intstrument n Feed A current n=1..7 1	AA							0		8	1/64	1/1	
4.	PDU Intstrument n Feed A current n=1..7 2	AA							0		8	1/64	1/1	
4.	PDU Intstrument n Feed A current n=1..7 3	AA							1		8	1/64	1/1	
4.	PDU Intstrument n Feed A current n=1..7 4	AA							1		8	1/64	1/1	
4.	PDU Intstrument n Feed A current n=1..7 5	AA							2		8	1/64	1/1	
4.	PDU Intstrument n Feed A current n=1..7 6	AA							2		8	1/64	1/1	
4.	PDU Intstrument n Feed A current n=1..7 7	AA							3		8	1/64	1/1	
4.	PDU Intstrument n Feed B current n=1..7 1	AA							3		8	1/64	1/1	
4.	PDU Intstrument n Feed B current n=1..7 2	AA							4		8	1/64	1/1	
4.	PDU Intstrument n Feed B current n=1..7 3	AA							4		8	1/64	1/1	
4.	PDU Intstrument n Feed B current n=1..7 4	AA							5		8	1/64	1/1	
4.	PDU Intstrument n Feed B current n=1..7 5	AA							5		8	1/64	1/1	
4.	PDU Intstrument n Feed B current n=1..7 6	AA							6		8	1/64	1/1	
4.	PDU Intstrument n Feed B current n=1..7 7	AA							6		8	1/64	1/1	
4.	PDU–1 Command Decoder status	PB							7	0	1	1/64	1/64	
4.	PDU–2 Command Decoder status	PB								1	1	1/64	1/64	
5.	BPC heater control relay status	PB								2	1	1/64	1/64	
5.	BPC heater control relay status	PB								3	1	1/64	1/64	
7.	Battery 1 pyro bus enable	PB								4	1	1/64	1/64	
7.	Battery 2 pyro bus enable	PB								5	1	1/64	1/64	
	Reserved	PB								6,7	2	1/64	1/64	
5.	BPC #1 fail status A	PB							7	8	1	1/64	1/64	
5.	BPC #1 fail status B	PB								9	1	1/64	1/64	
5.	BPC #1 fail status C	PB								10	1	1/64	1/64	
5.	BPC #1 fail status B	PB								11	1	1/64	1/64	

Note	1 prime 2 redundant Telemetry Point	Type	Board Address	Telemetry channel		Modulo	Window	Table #	Data Word	Start MSB	Length Bits	H&S Rate	H/K Rate	SCC Rate
5.	BPC #2 fail status A	PB								12	1	1/64	1/64	
5.	BPC #2 fail status B	PB								13	1	1/64	1/64	
5.	BPC #2 fail status C	PB								14	1	1/64	1/64	
5.	BPC #2 fail status D	PB								15	1	1/64	1/64	

3.2.3 BDU Sample Schedule Table 3.2.3

Sample Schedule Table	Rate	tlm sync hs	SSTABLE		GATHER		H/K			H&S			SCC		
			# in EOS min	16-bit data words	# in EOS min	16-bit data words	inef-fi-cien-cies	word counts	total 16bit word in 65.536	inef-fi-cien-cies	word counts	total 16bit word in 65.536	inef-fi-cien-cies	word counts	total 16bit word in 65.536
PWR 3.2.3	1/1	0	64	16	64	8	N	8	512						
PWR 3.2.3	1/64									N	8	8			
INEFFICIENCIES:															

Note	1 prime 2 redundant Telemetry Point	Type	Board Address	Telemetry channel		Modulo	Window	Table #	Data Word	Start MSB	Length Bits	H&S Rate	H/K Rate	SCC Rate
4.	PDU Battery 1,2 Cell voltage A1	AA							0		8	1/64	1/1	
4.	PDU Battery 1,2 Cell voltage A2	AA							0		8	1/64	1/1	
4.	PDU Battery 1,2 Cell voltage A3	AA							1		8	1/64	1/1	
4.	PDU Battery 1,2 Cell voltage A4	AA							1		8	1/64	1/1	
4.	PDU Battery 1,2 Cell voltage B1	AA							2		8	1/64	1/1	
4.	PDU Battery 1,2 Cell voltage B2	AA							2		8	1/64	1/1	
4.	PDU Battery 1,2 Cell voltage B3	AA							3		8	1/64	1/1	
4.	PDU Battery 1,2 Cell voltage B4	AA							3		8	1/64	1/1	
4.	PDU Battery 1,2 Cell voltage C1	AA							4		8	1/64	1/1	
4.	PDU Battery 1,2 Cell voltage C2	AA							4		8	1/64	1/1	
4.	PDU Battery 1,2 Cell voltage C3	AA							5		8	1/64	1/1	
4.	PDU Battery 1,2 Cell voltage C4	AA							5		8	1/64	1/1	
4.	PDU Battery 1,2 Cell voltage D1	AA							6		8	1/64	1/1	
4.	PDU Battery 1,2 Cell voltage D2	AA							6		8	1/64	1/1	
4.	PDU Battery 1,2 Cell voltage D3	AA							7		8	1/64	1/1	
4.	PDU Battery 1,2 Cell voltage D4	AA							7		8	1/64	1/1	

3.2.4 BDU Sample Schedule Table 3.2.4

Sample Schedule Table	Rate	tlm synchs	SSTABLE		GATHER		H/K			H&S			SCC		
			# in EOS min	16–bit data words	# in EOS min	16–bit data words	inefficiencies	word counts	total 16bit word in 65.536	inefficiencies	word counts	total 16bit word in 65.536	inefficiencies	word counts	total 16bit word in 65.536
PWR 3.2.4	1/8	0	8	16	7	7	N	7	56						
PWR 3.2.4	1/64				1	8				N	8	8			
INEFFICIENCIES:															

Note	1 prime 2 redundant Telemetry Point	Type	Board Address	Telemetry channel		Modulo	Window	Table #	Data Word	Start MSB	Length Bits	H&S Rate	H/K Rate	SCC Rate
4.	PDU Temperature 1	PA							0		8	1/64	1/8	
4.	PDU Temperature 2	PA							0		8	1/64	1/8	
4.	PDU EPC Temperature1	PA							1		8	1/64	1/8	
4.	PDU EPC Temperature2	PA							1		8	1/64	1/8	
4.	PDU EPC input current1	AA							2		8	1/64	1/8	
4.	PDU EPC input current2	AA							2		8	1/64	1/8	
4.	PDU Ground fault current	AA							3		8	1/64	1/8	
4.	PDU BAT 1 Chg Rate Selected1	AA							3		8	1/64	1/8	
4.	PDU BAT 1 Chg Rate Selected2	AA							4		8	1/64	1/8	
4.	PDU BAT 2 Chg Rate Selected1	AA							4		8	1/64	1/8	
4.	PDU BAT 2 Chg Rate Selected2	AA							5		8	1/64	1/8	
4.	PDU BAT 1 V/T Curve Selected1	AA							5		8	1/64	1/8	
4.	PDU BAT 1 V/T Curve Selected2	AA							6		8	1/64	1/8	
4.	PDU BAT 2 V/T Curve Selected1	AA							6		8	1/64	1/8	
4.	PDU BAT 2 V/T Curve Selected2	AA							7		8	1/64	1/8	
5.	BPC #1 override status A	PB								8	1	1/64	1/64	
5.	BPC #1 override status B	PB								9	1	1/64	1/64	
5.	BPC #1 override status C	PB								10	1	1/64	1/64	
5.	BPC #1 override status D	PB								11	1	1/64	1/64	
5.	BPC #2 override status A	PB								12	1	1/64	1/64	
5.	BPC #2 override status B	PB								13	1	1/64	1/64	
5.	BPC #2 override status C	PB								14	1	1/64	1/64	
5.	BPC #2 override status D	PB								15	1	1/64	1/64	

3.2.5 BDU Sample Schedule Table 3.2.5

Sample Schedule Table	Rate	tlm sync hs	SSTABLE		GATHER		H/K			H&S			SCC		
			# in EOS min	16–bit data words	# in EOS min	16–bit data words	inefficiencies	word counts	total 16bit word in 65.536	inefficiencies	word counts	total 16bit word in 65.536	inefficiencies	word counts	total 16bit word in 65.536
PWR 3.2.5	1/8	0	8	16	8	8	N	8	64						

PWR 3.2.5	1/64									N	8	8			
INEFFICIENCIES:															

Note	1 prime 2 redundant Telemetry Point	Type	Board Address	Telemetry channel		Modulo	Window	Table #	Data Word	Start MSB	Length Bits	H&S Rate	H/K Rate	SCC Rate
4.	PDU Battery 1 half Voltage A	AA							0		8	1/64	1/8	
4.	PDU Battery 1 half Voltage B	AA							0		8	1/64	1/8	
4.	PDU Battery 2 half Voltage A	AA							1		8	1/64	1/8	
4.	PDU Battery 2 half Voltage B	AA							1		8	1/64	1/8	
4.	PDU Battery 1,2 Pyro Bus Voltage1	AA							2		8	1/64	1/8	
4.	PDU Battery 1,2 Pyro Bus Voltage2	AA							2		8	1/64	1/8	
4.	PDU Battery 1,2 Pyro Bus Voltage3	AA							3		8	1/64	1/8	
4.	PDU Battery 1,2 Pyro Bus Voltage4	AA							3		8	1/64	1/8	
5.	BPC #1 channel currentA	AA							4		8	1/64	1/8	
5.	BPC #1 channel currentB	AA							4		8	1/64	1/8	
5.	BPC #1 channel currentC	AA							5		8	1/64	1/8	
5.	BPC #1 channel currentD	AA							5		8	1/64	1/8	
5.	BPC #2 channel currentA	AA							6		8	1/64	1/8	
5.	BPC #2 channel currentB	AA							6		8	1/64	1/8	
5.	BPC #2 channel currentC	AA							7		8	1/64	1/8	
5.	BPC #2 channel currentD	AA							7		8	1/64	1/8	

3.2.6 BDU Sample Schedule Table 3.2.6

Sample Schedule Table	Rate	tlm sync hs	SSTABLE		GATHER		H/K			H&S			SCC		
			# in EOS min	16–bit data words	# in EOS min	16–bit data words	inefficiencies	word counts	total 16bit word in 65.536	inefficiencies	word counts	total 16bit word in 65.536	inefficiencies	word counts	total 16bit word in 65.536
PWR 3.2.6	1/64	0	8	14	8	7	N	7	56						
PWR 3.2.6	1/64									N	7	7			
INEFFICIENCIES:															

Note	1 prime 2 redundant Telemetry Point	Type	Board Address	Telemetry channel		Modulo	Window	Table #	Data Word	Start MSB	Length Bits	H&S Rate	H/K Rate	SCC Rate
7.	Battery 1 temp A	PA							0		8	1/64	1/8	
7.	Battery 1 temp B	PA							0		8	1/64	1/8	
7.	Battery 1 temp C	PA							1		8	1/64	1/8	
7.	Battery 1 temp D	PA							1		8	1/64	1/8	
7.	Battery 1 temp E	PA							2		8	1/64	1/8	
7.	Battery 1 temp F	PA							2		8	1/64	1/8	
7.	Battery 1 temp A	PA							3		8	1/64	1/8	
7.	Battery 2 temp B	PA							3		8	1/64	1/8	
7.	Battery 2 temp C	PA							4		8	1/64	1/8	
7.	Battery 2 temp D	PA							4		8	1/64	1/8	
7.	Battery 2 temp E	PA							5		8	1/64	1/8	
7.	Battery 2 temp F	PA							5		8	1/64	1/8	
1.	BDU–PWR Temperature1	PA							6		8	1/64	1/64	
1.	BDU–PWR Temperature2	PA							6		8	1/64	1/64	

3.2.7 BDU Sample Schedule Table 3.2.7

Sample Schedule Table	Rate	tlm sync hs	SSTABLE		GATHER		H/K			H&S			SCC		
			# in EOS min	16–bit data words	# in EOS min	16–bit data words	inef-fi-cien-cies	word counts	total 16bit word in 65.536	inef-fi-cien-cies	word counts	total 16bit word in 65.536	inef-fi-cien-cies	word counts	total 16bit word in 65.536
PWR 3.2.7	1/64	0	1	16	1	8	N	8	8						
PWR 3.2.7	1/64									N	8	8			
INEFFICIENCIES:															

Note	1 prime 2 redundant Telemetry Point	Type	Board Address	Telemetry channel		Modulo	Window	Table #	Data Word	Start MSB	Length Bits	H&S Rate	H/K Rate	SCC Rate
3.	FSS-1 Temperature(electornics & sensor head)	PA							0		8	1/64	1/64	–
3.	FSS-2 Temperature(electornics & sensor head)	PA							0		8	1/64	1/64	–
2	ADE A Temperature	PA							1		8	1/64	1/64	
2	ADE B Temperature	PA							1		8	1/64	1/64	
5.	BPC #1 Temperature A	PA							2		8	1/64	1/64	
5.	BPC #1 Temperature B	PA							2		8	1/64	1/64	
5.	BPC #1 Temperature C	PA							3		8	1/64	1/64	
5.	BPC #1 Temperature D	PA							3		8	1/64	1/64	
5.	BPC #2 Temperature A	PA							4		8	1/64	1/64	
5.	BPC #2 Temperature B	PA							4		8	1/64	1/64	
5.	BPC #2 Temperature C	PA							5		8	1/64	1/64	
5.	BPC #2 Temperature D	PA							5		8	1/64	1/64	
2.	Magnetic Torque Rods (MTR) Temp1	PA							6		8	1/64	1/64	
2.	Magnetic Torque Rods (MTR) Temp2	PA							6		8	1/64	1/64	
2.	Magnetic Torque Rods (MTR) Temp3	PA							7		8	1/64	1/64	
5.	BPC #1 status A	PB							7	8	1	1/64	1/64	
5.	BPC #1 status B	PB								9	1	1/64	1/64	
5.	BPC #1 status C	PB								10	1	1/64	1/64	
5.	BPC #1 status D	PB								11	1	1/64	1/64	
5.	BPC #2 status A	PB								12	1	1/64	1/64	
5.	BPC #2 status B	PB								13	1	1/64	1/64	
5.	BPC #2 status C	PB								14	1	1/64	1/64	
5.	BPC #2 status D	PB								15	1	1/64	1/64	

3.2.8 BDU Sample Schedule Table 3.2.8

Sample Schedule Table	Rate	tlm sync hs	SSTABLE		GATHER		H/K			H&S			SCC		
			# in EOS min	16-bit data words	# in EOS min	16-bit data words	inefficiencies	word counts	total 16bit word in 65.536	inefficiencies	word counts	total 16bit word in 65.536	inefficiencies	word counts	total 16bit word in 65.536
PWR 3.2.8	1/8	0	8	16	8	8	N	8	64						

PWR 3.2.8	1/64									N	8	8			

INEFFICIENCIES:

hidden inefficiences: See Reserved.

This happened because the PB were at different rates. Need to check if H/K shouldn't be 1/8 instead of 1/64 for status which are 1 bit.

Note	1 prime 2 redundant Telemetry Point	Type	Board Address	Telemetry channel		Modulo	Window	Table #	Data Word	Start MSB	Length Bits	H&S Rate	H/K Rate	SCC Rate
4.	PDU Instrum n Feed A On (Off) n=1..7 1	AB							0	0	1	1/64	1/8	
4.	PDU Instrum n Feed A On (Off) n=1..7 2	AB								1	1	1/64	1/8	
4.	PDU Instrum n Feed A On (Off) n=1..7 3	AB								2	1	1/64	1/8	
4.	PDU Instrum n Feed A On (Off) n=1..7 4	AB								3	1	1/64	1/8	
4.	PDU Instrum n Feed A On (Off) n=1..7 5	AB								4	1	1/64	1/8	
4.	PDU Instrum n Feed A On (Off) n=1..7 6	AB								5	1	1/64	1/8	
4.	PDU Instrum n Feed A On (Off) n=1..7 7	AB								6	1	1/64	1/8	
4.	PDU Instrum n Feed B On (Off) n=1..7 1	AB								7	1	1/64	1/8	
4.	PDU Instrum n Feed B On (Off) n=1..7 2	AB								8	1	1/64	1/8	
4.	PDU Instrum n Feed B On (Off) n=1..7 3	AB								9	1	1/64	1/8	
4.	PDU Instrum n Feed B On (Off) n=1..7 4	AB								10	1	1/64	1/8	
4.	PDU Instrum n Feed B On (Off) n=1..7 5	AB								11	1	1/64	1/8	
4.	PDU Instrum n Feed B On (Off) n=1..7 6	AB								12	1	1/64	1/8	
4.	PDU Instrum n Feed B On (Off) n=1..7 7	AB								13	1	1/64	1/8	
4.	PDU HGA Feed A On (Off)	AB								14	1	1/64	1/8	
4.	PDU HGA Feed B On (Off)	AB								15	1	1/64	1/8	
4.	PDU BPC 1/2 Transconductance Status 1	AB							1	0	1	1/64	1/8	

Note	1 prime 2 redundant Telemetry Point	Type	Board Address	Telemetry channel		Modulo	Window	Table #	Data Word	Start MSB	Length Bits	H&S Rate	H/K Rate	SCC Rate
4.	PDU BPC 1/2 Transconductance Status 2	AB								1	1	1/64	1/8	
4.	PDU CSM A enable/inhibit status	AB								2	1	1/64	1/8	
4.	PDU CSM B enable/inhibit status	AB								3	1	1/64	1/8	
	Reserved	AB								4–7	4	1/64	1/8	
7.	Battery Heater control status1	PB								8	1	1/64	1/8	
7.	Battery Heater control status2	PB								9	1	1/64	1/8	
7.	Battery Heater control status3	PB								10	1	1/64	1/8	
7.	Battery Heater control status4	PB								11	1	1/64	1/8	
7.	Battery Heater control status5	PB								12	1	1/64	1/8	
7.	Battery Heater control status6	PB								13	1	1/64	1/8	
7.	Battery Heater control status7	PB								14	1	1/64	1/8	
7.	Battery Heater control status8	PB								15	1	1/64	1/8	
8.	HGA Pyro Relay Status1	PB							2	0	1	1/64	1/8	
8.	HGA Pyro Relay Status2	PB								1	1	1/64	1/8	
8.	HGA Pyro Relay Status3	PB								2	1	1/64	1/8	
8.	HGA Pyro Relay Status4	PB								3	1	1/64	1/8	
8.	HGA Pyro Relay Status5	PB								4	1	1/64	1/8	
8.	HGA Pyro Relay Status6	PB								5	1	1/64	1/8	
8.	HGA Pyro Relay Status7	PB								6	1	1/64	1/8	
8.	HGA Pyro Relay Status8	PB								7	1	1/64	1/8	
8.	HGA Pyro Relay Status9	PB								8	1	1/64	1/8	
8.	HGA Pyro Relay Status10	PB								9	1	1/64	1/8	
3.	FSS–1 Heater Relay Status	PB								10	1	1/64	1/8	
3.	FSS–2 Heater Relay Status	PB								11	1	1/64	1/8	
4.	PDU–1 Heater control relay status	PB								12	1	1/64	1/8	
4.	PDU–2 Heater control relay status	PB								13	1	1/64	1/8	
	Reserved	PB								14–15	2	1/64	1/8	
7.	Battery 1 pressure A	AA							3		8	1/64	1/8	
7.	Battery 1 pressure B	AA							3		8	1/64	1/8	
7.	Battery 1 pressure C	AA							4		8	1/64	1/8	
7.	Battery 1 pressure D	AA							4		8	1/64	1/8	
7.	Battery 2 pressure A	AA							5		8	1/64	1/8	
7.	Battery 2 pressure B	AA							5		8	1/64	1/8	

Note	1 prime 2 redundant Telemetry Point	Type	Board Address	Telemetry channel		Modulo	Window	Table #	Data Word	Start MSB	Length Bits	H&S Rate	H/K Rate	SCC Rate
7.	Battery 2 pressure C	AA							6		8	1/64	1/8	
7.	Battery 2 pressure D	AA							6		8	1/64	1/8	
1.	BDU–PWR EPC i/p current1	AA							7		8	1/64	1/8	
1.	BDU–PWR EPC i/p current2	AA							7		8	1/64	1/8	

3.2.9 BDU Sample Schedule Table 3.2.9

Sample Schedule Table	Rate	tlm sync hs	SSTABLE		GATHER		H/K			H&S			SCC		
			# in EOS min	16–bit data words	# in EOS min	16–bit data words	inef-fi-cien-cies	word counts	total 16bit word in 65.536	inef-fi-cien-cies	word counts	total 16bit word in 65.536	inef-fi-cien-cies	word counts	total 16bit word in 65.536
PWR 3.2.9	1/1	1	64	5	56	1	Y	1	64						
PWR 3.2.9	1/8				8	5				Y	5	40			
INEFFICIENCIES:															

Note	Telemetry Point	Type	Board Address	Telemetry channel		Modulo	Window	Table #	Data Word	Start MSB	Length Bits	H&S Rate	H/K Rate	SCC Rate
4.	PDU Total Housekeeping Current	AA							0		8	–	1/1	
3.	TLM SYNCH													
3.	FSS Sun angles & presence data 1	S									8	–	1/8	.512
3.	FSS Sun angles & presence data 2	S							1		8	–	1/8	.512
3.	FSS Sun angles & presence data 3	S									8	–	1/8	.512
3.	FSS Sun angles & presence data 4	S							2		8	–	1/8	.512
4.	PDU BPC–1A Current	AA									8	–	1/8	
4.	PDU BPC–1B Current	AA							3		8	–	1/8	
4.	PDU BPC–2A Current	AA									8	–	1/8	
4.	PDU BPC–2B Current	AA							4		8	–	1/8	

3.2.10 BDU Sample Schedule Table 3.2.10

Sample Schedule Table	Rate	tlm sync hs	SSTABLE		GATHER		H/K			H&S			SCC		
			# in EOS min	16–bit data words	# in EOS min	16–bit data words	inef-fi-cien-cies	word counts	total 16bit word in 65.536	inef-fi-cien-cies	word counts	total 16bit word in 65.536	inef-fi-cien-cies	word counts	total 16bit word in 65.536
PWR 3.2.10	1/1	0	64	4	64	2	N	2	128						
PWR 3.2.10	1/8									N	2	16			
INEFFICIENCIES:															

Note	1 prime 2 redundant Telemetry Point	Type	Board Address	Telemetry channel		Modulo	Window	Table #	Data Word	Start MSB	Length Bits	H&S Rate	H/K Rate	SCC Rate
4.	PDU Battery 1 Extended Range Voltage1	AA									8	1/8	1/1	
4.	PDU Battery 1 Extended Range Voltage2	AA									8	1/8	1/1	
4.	PDU Battery 2 Extended Range Voltage1	AA									8	1/8	1/1	
4.	PDU Battery 2 Extended Range Voltage2	AA									8	1/8	1/1	

4 Reaction Wheel Assembly BDU

4.1 SCC Closed Loop

Not Applicable

4.2

4.2.1 BDU Sample Schedule Table 4.2.1

1/8 H/K Word count=7
1/64 H/K, H&S Word count=7
hidden inefficiencies: see Reserverd 4 bits PB both on 1/8 and 1/64

Note	PRIME Side Redundant Telemetry Point	Type	Board Address	Telemetry channel					Data Word	Start MSB	Length Bits	H&S Rate	H/K Rate	SCC Rate
1	RWA1 A Wheel Status (On/Off) *RWA Wheel Status (On/Off) 1*	PB							1	0	1	1/64	1/8	
1	RWA Wheel Status (On/Off) 2	PB								1	1	1/64	1/8	
1	RWA Wheel Status (On/Off) 3	PB								2	1	1/64	1/8	
1	RWA Wheel Status (On/Off) 4	PB								3	1	1/64	1/8	
1	RWA Heater Control Relay Status 1	PB								4	1	1/64	1/8	
1	RWA Heater Control Relay Status 2	PB								5	1	1/64	1/8	
1	RWA Heater Control Relay Status 3	PB								6	1	1/64	1/8	
1	RWA Heater Control Relay Status 4	PB								7	1	1/64	1/8	
1	RWA Heater Control Relay Status 5	PB								8	1	1/64	1/8	
1	RWA Heater Control Relay Status 6	PB								9	1	1/64	1/8	
1	RWA Heater Control Relay Status 7	PB								10	1	1/64	1/8	
1	RWA Heater Cont rol Relay Status 8	PB								11	1	1/64	1/8	
	Reserved	PB								12–15	4	1/64	1/8	
1	RWA Motor Current 1	AA							2		8	1/64	1/8	
1	RWA Motor Current 2	AA							2		8	1/64	1/8	
1	RWA Motor Current 3	AA							3		8	1/64	1/8	
1	RWA Motor Current 4	AA							3		8	1/64	1/8	
2	RWA Temperature Status 1	PA							4		8	1/64	1/8	
2	RWA Temperature Status 2	PA							4		8	1/64	1/8	
2	RWA Temperature Status 3	PA							5		8	1/64	1/8	
2	RWA Temperature Status 4	PA							5		8	1/64	1/8	
2	RWA Temperature Status 5	PA							6		8	1/64	1/8	
2	RWA Temperature Status 6	PA							6		8	1/64	1/8	

Note	PRIME Side Redundant Telemetry Point	Type	Board Address	Telemetry channel					Data Word	Start MSB	Length Bits	H&S Rate	H/K Rate	SCC Rate
2	RWA Temperature Status 7	PA							7		8	1/64	1/8	
2	RWA Temperature Status 8	PA							7		8	1/64	1/8	

Note:
1 EOS–DN–RES–027 1.2.7.3 RWA
2 EOS–DN–RES–027 1.2.10.2 Spacecraft Structures

4.2.2 BDU Sample Schedule Table 4.2.1

1/64 H/K, H&S Word count=4
hidden inefficiencies: None

Note	PRIME Side Redundant Telemetry Point	Type	Board Address	Telemetry channel					Data Word	Start MSB	Length Bits	H&S Rate	H/K Rate	SCC Rate
1	RWA Spin Bearing Temperature 1	PA							0		8	1/64	1/64	
1	RWA Spin Bearing Temperature 2	PA							0		8	1/64	1/64	
1	RWA Spin Bearing Temperature 3	PA							1		8	1/64	1/64	
1	RWA Spin Bearing Temperature 5	PA							1		8	1/64	1/64	
1	RWA Spin Bearing Temperature 5	PA							2		8	1/64	1/64	
1	RWA Spin Bearing Temperature 6	PA							2		8	1/64	1/64	
1	RWA Spin Bearing Temperature 7	PA							3		8	1/64	1/64	
1	RWA Spin Bearing Temperature 8	PA							3		8	1/64	1/64	

Note:
1 EOS–DN–RES–027 1.2.7.3 RWA
2 EOS–DN–RES–027 1.2.10.2 Spacecraft Structures

5 Propulsion Module BDU Telemetry

5.1 SCC Closed Loop

N/A

5.2 Telemetry

5.2.1 BDU Sample Schedule Table 5.2.1

Sample Schedule Table	Rate	tlm synchs	SSTABLE		GATHER		H/K			H&S			SCC		
			# in EOS min	16–bit data words	# in EOS min	16–bit data words	inef-fi-cien-cies	word counts	total 16bit word in 65.536	inef-fi-cien-cies	word counts	total 16bit word in 65.536	inef-fi-cien-cies	word counts	total 16bit word in 65.536
PROP 5.2.1	1/8	1	8	15	7	2	N	2	14						
PRO 5.2.1	1/64				1	7	N	7	7	N	7	7			

tlm synch contained within sample schedule table
hidden inefficiencies: none
Tables 5.2.1 and 5.2.2 should be sent in adjacent minor cycles of same major cycle

Note	Side A Telemetry Point	Type	Board Address	Telemetry channel		Modulo	Window	Table #	Data Word	Start MSB	Length Bits	H&S Rate	H/K Rate	SCC Rate
	TLM Synch PMEA Configuration relay status side A								–	–	–	1/64	1/8	
1	PMEA Side A Relay Status(1–48)	S							0–3	0	48	1/64	1/8	
1	PMEA secondary o/p voltages1	AA							4		8	1/64	1/8	
1	PMEA secondary o/p voltages2	AA							4		8	1/64	1/8	
1	PMEA secondary o/p voltages3	AA							5		8	1/64	1/8	
1	PMEA secondary o/p voltages4	AA							5		8	1/64	1/8	
1	HCEs on/off 1	PA							6		8	1/64	1/8	
1	HCEs on/off 2	PA							6		8	1/64	1/8	

Note:
1 EOS–DN–RES–027 1.2.8, DN–GN&C–039 Rev A and Ephriam
7 EOS–DN–RES–027 1.2.6.1, PROP BDU

Separate serial I/O interface than thruster control
Synch utilized for latching up relay position status
synch not needed for moving serial buffer pointer because reading is a serial chain; therefore no pointer required
Readout can begin 250 usecs following receipt of synch; hence, keep tlm synch entry in same BDU sample schedule table with serial data readout

5.2.2 BDU Sample Schedule Table 5.2.2

Sample Schedule Table	Rate	tlm synchs	SSTABLE		GATHER		H/K			H&S			SCC		
			# in EOS min	16–bit data words	# in EOS min	16–bit data words	inefficiencies	word counts	total 16bit word in 65.536	inefficiencies	word counts	total 16bit word in 65.536	inefficiencies	word counts	total 16bit word in 65.536
PROP 5.2.2	1/8	1	8	15	7	2	N	2	14						
PROP 5.2.2	1/64				1	7	N	7	7	N	7	7			

hidden inefficiencies: none
Tables 5.2.1 and 5.2.2 should be sent in adjacent minor cycles of same major cycle

Note	Side A Telemetry Point	Type	Board Address	Telemetry channel		Modulo	Window	Table #	Data Word	Start MSB	Length Bits	H&S Rate	H/K Rate	SCC Rate
	TLM Synch PMEA configuration realy status side B								–	–	–	1/64	1/8	
1	PMEA Side B Relay Status(1–48)	S							0–3	0	48	1/64	1/8	
1	HCEs on/off 3	PA							4		8	1/64	1/8	
1	HCEs on/off 4	PA									8	1/64	1/8	
1	HCEs on/off 5	PA							5		8	1/64	1/8	
1	HCEs on/off 6	PA									8	1/64	1/8	
1	HCEs on/off 7	PA							6		8	1/64	1/8	
1	HCEs on/off 8	PA									8	1/64	1/8	

Note:
1 EOS–DN–RES–027 1.2.8, DN–GN&C–039 Rev A and Ephriam

Separate serial I/O interface than thruster control
Synch utilized for latching up relay position status
synch not needed for moving serial buffer pointer because reading is a serial chain; therefore no pointer required
Readout can begin 250 usecs following receipt of synch; hence, keep tlm synch entry in same BDU sample schedule table with serial data readout

5.2.3 BDU Sample Schedule Table 5.2.3

Sample Schedule Table	Rate	tlm synchs	SSTABLE		GATHER		H/K			H&S			SCC		
			# in EOS min	16–bit data words	# in EOS min	16–bit data words	inefficiencies	word counts	total 16bit word in 65.536	inefficiencies	word counts	total 16bit word in 65.536	inefficiencies	word counts	total 16bit word in 65.536
PROP 5.2.3	1/8	1	8	16	8	8	N	8	64						
PROP 5.2.3	–														

tlm synch for serial data in both 5.2.3 and 5.2.4 appear in minor cycle 0 per Elliots design note is in Table 5.2.7
readout must be no sooner minor cycle than minor cycle 4
The readouts of both tables should be in adjacent minor cycles of same major cycle
hidden inefficiencies: none

Note	PMEA Thruster Control Status Side A Telemetry Point	Type	Board Address	Telemetry channel		Modulo	Window	Table #	Data Word	Start MSB	Length Bits	H&S Rate	H/K Rate	SCC Rate
1	Safe Mode ON/OFF	S							0	0	8	–	1/8	
1	Last Command	S							0	8	8	–	1/8	
1	Command Cycle Error	S							1	0	8	–	1/8	
1	REA 1 ON/OFF	S							1	8	8	–	1/8	
1	REA 2 ON/OFF	S							2	0	8	–	1/8	
1	REA 3 ON/OFF	S							2	8	8	–	1/8	
1	REA 4 ON/OFF	S							3	0	8	–	1/8	
1	REA 5 ON/OFF	S							3	8	8	–	1/8	
1	REA 7 ON/OFF	S							4	0	8	–	1/8	
1	REA 9 ON/OFF	S							4	8	8	–	1/8	
1	REA 11 ON/OFF	S							5	0	8	–	1/8	
1	REA 13 ON/OFF	S							5	8	8	–	1/8	
1	REA 15 ON/OFF	S							6	0	8	–	1/8	
1	Reserved	S							6	8	8	–	1/8	
1	Prop Module EPC I/P Current1	AA							7		8	–	1/8	
1	Prop Module EPC I/P Current2	AA							7		8	–	1/8	

Note:
1 EOS–DN–RES–027 1.2.8, DN–GN&C–039 Rev A and Ephriam

Processing Notes:
1. All thruster firing are synchronized to the BDU tlm synch pulse for this serial I/O interface
2. Tlm sampling utilizes the same tlm synch pulse.
3 If tlm synch is issued in Minor Cycle N, Readout of serial data is available no sooner than Minor Cycle N+3 and data remains undistrubed until the next tlm synch pulse to this serial I/O interface
4 this tlm synch pulse is coordinated with thruster firing verification. TLM synch pulse occurs every 1.024 seconds—there is a total of 112 unique sample points and this samples 13 tlm points each 1.024 seconds and 8 sampling intervals provide the 112 unique sample points

5.2.4 BDU Sample Schedule Table 5.2.4

Sample Schedule Table	Rate	tlm synchs	# in EOS min	16–bit data words	# in EOS min	16–bit data words	inefficiencies	word counts	total 16bit word in 65.536	inefficiencies	word counts	total 16bit word in 65.536	inefficiencies	word counts	total 16bit word in 65.536

PROP 5.2.4	1/8	1	8	14	8	7	N	7	56						
PRO 5.2.4	–														

tlm synch for both 5.2.3 and 5.2.4 appear in minor cycle 0 per Elliots design note is in Table 5.2.7
readout must be no sooner minor cycle than minor cycle 4
The readouts of both tables should be in adjacent minor cycles of same major cycle
hidden inefficiencies: none

Note	PMEA Thruster Control Status Side A Telemetry Point	Type	Board Address	Telemetry channel	Minor	Modulo	Window	Table #	Data Word	Start MSB	Length Bits	H&S Rate	H/K Rate	SCC Rate
1	Safe Mode ON/OFF	S							0	0	8	–	1/8	
1	Last Command	S							0	8	8	–	1/8	
1	Command Cycle Error	S							1	0	8	–	1/8	
1	REA 1 ON/OFF	S							1	8	8	–	1/8	
1	REA 2 ON/OFF	S							2	0	8	–	1/8	
1	REA 3 ON/OFF	S							2	8	8	–	1/8	
1	REA 4 ON/OFF	S							3	0	8	–	1/8	
1	REA 6 ON/OFF	S							3	8	8	–	1/8	
1	REA 8 ON/OFF	S							4	0	8	–	1/8	
1	REA 10 ON/OFF	S							4	8	8	–	1/8	
1	REA 12 ON/OFF	S							5	0	8	–	1/8	
1	REA 14 ON/OFF	S							5	8	8	–	1/8	
1	REA 16 ON/OFF	S							6	0	8	–	1/8	
1	Reserved	S							6	8	8	–	1/8	

Note:
1 EOS–DN–RES–027 1.2.8, DN–GN&C–039 Rev A and Ephriam

Processing Notes:
1. All thruster firing are synchronized to the BDU tlm synch pulse for this serial I/O interface
2. Tlm sampling utilizes the same tlm synch pulse.
3 If tlm synch is issued in Minor Cycle N, Readout of serial data is available no sooner than Minor Cycle N+3 and data remains undistrubed until the next tlm synch pulse to this serial I/O interface
4 this tlm synch pulse is coordinated with thruster firing verification. TLM synch pulse occurs every 1.024 seconds—there is a total of 112 unique sample points and this samples 13 tlm points each 1.024 seconds and 8 sampling intervals provide the 112 unique sample points

5.2.5 BDU Sample Schedule Table 5.2.5

Sample Schedule Table	Rate	tlm sync hs	# in EOS min	16–bit data words	# in EOS min	16–bit data words	inef-fi-cien-cies	word counts	total 16bit word in 65.536	inef-fi-cien-cies	word counts	total 16bit word in 65.536	inef-fi-cien-cies	word counts	total 16bit word in 65.536
PROP 5.2.5	1/8	0	8	16	8	8	N	8	64						
PROP 5.2.5	1/64									N	8	8			
hidden inefficiencies: none															

Note	Side A Telemetry Point	Type	Board Address	Telemetry channel		Modulo	Window	Table #	Data Word	Start MSB	Length Bits	H&S Rate	H/K Rate	SCC Rate
1	REA Temp1	PA							0		8	1/64	1/8	
1	REA Temp2	PA							0		8	1/64	1/8	
1	REA Temp3	PA							1		8	1/64	1/8	
1	REA Temp4	PA							1		8	1/64	1/8	
1	REA Temp5	PA							2		8	1/64	1/8	
1	REA Temp6	PA							2		8	1/64	1/8	
1	REA Temp7	PA							3		8	1/64	1/8	
1	REA Temp8	PA							3		8	1/64	1/8	
1	REA Temp9	PA							4		8	1/64	1/8	
1	REA Temp10	PA							4		8	1/64	1/8	
1	REA Temp11	PA							5		8	1/64	1/8	
1	REA Temp12	PA							5		8	1/64	1/8	
1	REA Temp13	PA							6		8	1/64	1/8	
1	REA Temp14	PA							6		8	1/64	1/8	
1	REA Temp15	PA							7		8	1/64	1/8	
1	REA Temp16	PA							7		8	1/64	1/8	

NOTE:
1 EOS–DN–RES–027 1.2.8 PROPS

5.2.6 BDU Sample Schedule Table 5.2.6

Sample Schedule Table	Rate	tlm sync hs	# in EOS min	16–bit data words	# in EOS min	16–bit data words	inefficiencies	word counts	total 16bit word in 65.536	inefficiencies	word counts	total 16bit word in 65.536	inefficiencies	word counts	total 16bit word in 65.536
PROP 5.2.6	1/8	0	8	16	8	8	N	8	64						
PROP 5.2.6	1/64									N	8	8			

hidden inefficiencies: none

Note	Side A Telemetry Point	Type	Board Address	Telemetry channel		Modulo	Window	Table #	Data Word	Start MSB	Length Bits	H&S Rate	H/K Rate	SCC Rate
1	Catalyst Bed Temperature1	PA							0		8	1/64	1/8	
1	Catalyst Bed Temperature2	PA							0		8	1/64	1/8	
1	Catalyst Bed Temperature3	PA							1		8	1/64	1/8	
1	Catalyst Bed Temperature4	PA							1		8	1/64	1/8	
1	Catalyst Bed Temperature5	PA							2		8	1/64	1/8	
1	Catalyst Bed Temperature6	PA							2		8	1/64	1/8	
1	Catalyst Bed Temperature7	PA							3		8	1/64	1/8	
1	Catalyst Bed Temperature8	PA							3		8	1/64	1/8	
1	Catalyst Bed Temperature9	PA							4		8	1/64	1/8	
1	Catalyst Bed Temperature10	PA							4		8	1/64	1/8	
1	Catalyst Bed Temperature11	PA							5		8	1/64	1/8	
1	Catalyst Bed Temperature12	PA							5		8	1/64	1/8	
1	Catalyst Bed Temperature13	PA							6		8	1/64	1/8	
1	Catalyst Bed Temperature14	PA							6		8	1/64	1/8	
1	Catalyst Bed Temperature15	PA							7		8	1/64	1/8	
1	Catalyst Bed Temperature16	PA							7		8	1/64	1/8	

NOTE:
1 EOS–DN–RES–027 1.2.8 PROPS

5.2.7 BDU Sample Schedule Table 5.2.7

Sample Schedule Table	Rate	tlm synchs	# in EOS min	16–bit data words	# in EOS min	16–bit data words	inefficiencies	word counts	total 16bit word in 65.536	inefficiencies	word counts	total 16bit word in 65.536	inefficiencies	word counts	total 16bit word in 65.536
PROP 5.2.7	1/8	2	64	16	0	0	N	0	0						
PROP 5.2.7	1/64									N	7	7			

1/1 only tlm synch word count=0
1/64 H/K, H&S word count=7
hidden inefficiencies: odd number of 8–bit data words

Note	Telemetry Point	Type	Board Address	Telemetry channel		Modulo	Window	Table #	Data Word	Start MSB	Length Bits	H&S Rate	H/K Rate	SCC Rate
	Tlm synch to PMEA	–									–	1/1	1/1	
	Tlm synch to PMEA	–									–	1/1	1/1	
1	HCE temp	PA							0		8	1/64	1/64	
1	PMEA Temperature1	PA							0		8	1/64	1/64	
1	PMEA Temperature2	PA							1		8	1/64	1/64	
1	Propellant Tank Temperature1	PA							1		8	1/64	1/64	
1	Propellant Tank Temperature2	PA							2		8	1/64	1/64	
1	Propellant Tank Temperature3	PA							2		8	1/64	1/64	
1	Propellant Tank Temperature4	PA							3		8	1/64	1/64	
1	Propellant Tank Pressure	AA							3		8	1/64	1/64	
7	PROP BDU EPC temperature1	PA							4		8	1/64	1/64	
7	PROP BDU EPC temperature2	PA							4		8	1/64	1/64	
1	EPC Temp1	PA							5		8	1/64	1/64	
1	EPC Temp2	PA							5		8	1/64	1/64	
1	EPC Temp3	PA							6		8	1/64	1/64	
1	EPC Temp4	PA							6		8	1/64	1/64	

NOTE:
1 EOS–DN–RES–027 1.2.8 PROPS

5.2.8 BDU Sample Schedule Table 5.2.8

Sample Schedule Table	Rate	tlm sync hs	# in EOS min	16–bit data words	# in EOS min	16–bit data words	inefficiencies	word counts	total 16bit word in 65.536	inefficiencies	word counts	total 16bit word in 65.536	inefficiencies	word counts	total 16bit word in 65.536
PROP 5.2.8	1/8	0	8	14	7	3	N	3	21						
PROP 5.2.8	1/64				1	7	N	7	7	N	7	7			
hidden inefficiencies: See Reserved PB															

Note	Side A Telemetry Point	Type	Board Address	Telemetry channel		Modulo	Window	Table #	Data Word	Start MSB	Length Bits	H&S Rate	H/K Rate	SCC Rate
1	Latch Valve (Open/Close)1	PB							0	0	1	1/64	1/8	
1	Latch Valve (Open/Close)2	PB								1	1	1/64	1/8	
1	Prop Module EPC on/off1	PB								2	1	1/64	1/8	
1	Prop Module EPC on/off2	PB								3	1	1/64	1/8	
1	Prop Module EPC on/off3	PB								4	1	1/64	1/8	
1	Prop Module EPC on/off4	PB								5	1	1/64	1/8	
1	PMEA Side Status (On/Off)1	PB								6	1	1/64	1/8	
1	PMEA Side Status (On/Off)2	PB								7	1	1/64	1/8	
7	PROP BDU EPC i/p current 1	AA							0		8	1/64	1/8	
7	PROP BDU EPC i/p current 2	AA							1		8	1/64	1/8	
7	PROP BDU Heater Control Relay1	PB							1	0	1	1/64	1/8	
7	PROP BDU Heater Control Relay2	PB								1	1	1/64	1/8	
	Reserved	PB								2–7	6	1/64	1/8	
1	Prop Module EPC I/P Current3	AA							2		8	1/64	1/8	
1	Prop Module EPC I/P Current4	AA							2		8	1/64	1/8	
1	Structure Temp1	PA							3		8	1/64	1/64	
1	Structure Temp2	PA									8	1/64	1/64	
1	Structure Temp3	PA							4		8	1/64	1/64	
1	Structure Temp4	PA									8	1/64	1/64	
1	Structure Temp5	PA							5		8	1/64	1/64	
1	Structure Temp6	PA									8	1/64	1/64	
1	Structure Temp7	PA							6		8	1/64	1/64	
1	Structure Temp8	PA									8	1/64	1/64	

NOTE:
1 EOS–DN–RES–027 1.2.8 PROPS
7 EOS–DN–RES–027 1.2.6.1 BDU

5.2.9 BDU Sample Schedule Table 5.2.9

Sample Schedule Table	Rate	tlm sync hs	# in EOS min	16-bit data words	# in EOS min	16-bit data words	inef-fi-cien-cies	word counts	total 16bit word in 65.536	inef-fi-cien-cies	word counts	total 16bit word in 65.536	inef-fi-cien-cies	word counts	total 16bit word in 65.536
PROP 5.2.9	1/64	0	1	16	1	8	N	8	8						
PROP 5.2.9	1/64									N	8	8			
hidden inefficiencies: None															

Note	Side A Telemetry Point	Type	Board Address	Telemetry channel		Modulo	Window	Table #	Data Word	Start MSB	Length Bits	H&S Rate	H/K Rate	SCC Rate
1	Line Temperature1 (includes latch valve temperature)	PA							0		8	1/64	1/64	
1	Line Temperature2 (includes latch valve temperature)	PA							0		8	1/64	1/64	
1	Line Temperature3 (includes latch valve temperature)	PA							1		8	1/64	1/64	
1	Line Temperature4 (includes latch valve temperature)	PA							1		8	1/64	1/64	
1	Line Temperature5 (includes latch valve temperature)	PA							2		8	1/64	1/64	
1	Line Temperature6 (includes latch valve temperature)	PA							2		8	1/64	1/64	
1	Line Temperature7 (includes latch valve temperature)	PA							3		8	1/64	1/64	
1	Line Temperature8 (includes latch valve temperature)	PA							3		8	1/64	1/64	
1	Line Temperature9 (includes latch valve temperature)	PA							4		8	1/64	1/64	
1	Line Temperature10 (includes latch valve temperature)	PA							4		8	1/64	1/64	
1	Line Temperature11 (includes latch valve temperature)	PA							5		8	1/64	1/64	
1	Line Temperature12 (includes latch valve temperature)	PA							5		8	1/64	1/64	

Note	Side A Telemetry Point	Type	Board Address	Telemetry channel		Modulo	Window	Table #	Data Word	Start MSB	Length Bits	H&S Rate	H/K Rate	SCC Rate
1	Line Temperature13 (includes latch valve temperature)	PA							6		8	1/64	1/64	
1	Line Temperature14 (includes latch valve temperature)	PA							6		8	1/64	1/64	
1	Line Temperature15 (includes latch valve temperature)	PA							7		8	1/64	1/64	
1	Line Temperature16 (includes latch valve temperature)	PA							7		8	1/64	1/64	

NOTE:
1 EOS–DN–RES–027 1.2.8 PROPS

6 DAS BDU

6.1 SCC Closed Loop

6.1.1 BDU Sample Schedule Table 6.1.1

Source: DN–GN&C–039–Rev A.

Sample Schedule Table	Rate	tlm sync hs	SSTABLE		GATHER		H/K			H&S			SCC		
			# in EOS min	16–bit data words	# in EOS min	16–bit data words	inef-fi-cien-cies	word counts	total 16bit word in 65.536	inef-fi-cien-cies	word counts	total 16bit word in 65.536	inef-fi-cien-cies	word counts	total 16bit word in 65.536
DAS 6.1.1	.512	0	128	8	128	4							N	4	512
DAS 6.1.1															

Telemetry Point	Type	Board Address	Telemetry Channel	Data Word	Start MSB	Length Bits	H&S Rate	H/K Rate	SCC Rate
ESA1 E~~&H~~ Error ~~(Fine & Course) 1~~	AA			0	0	8	N/A	N/A	.512
ESA1 E~~&H~~ Error ~~(Fine & Coarse) 2~~	AA			0	8	8	N/A	N/A	.512
ESA1 ~~E&~~H Error ~~(Fine & Course) 3~~	AA			1	0	8	N/A	N/A	.512
ESA1 ~~E&~~H Error ~~(Fine & Coarse) 4~~	AA			1	8	8	N/A	N/A	.512
ESA2 E~~&H~~ Error ~~(Fine & Course) 1~~	AA			2	0	8	N/A	N/A	.512
ESA2 E~~&H~~ Error ~~(Fine & Coarse) 2~~	AA			2	8	8	N/A	N/A	.512
ESA2 ~~E&~~H Error ~~(Fine & Course) 3~~	AA			3	0	8	N/A	N/A	.512
ESA2 ~~E&~~H Error ~~(Fine & Coarse) 4~~	AA			3	8	8	N/A	N/A	.512

6.2 Telemetry

6.2.1 BDU Sample Schedule Table 6.2.1

Sample Schedule Table	Rate	tlm sync hs	SSTABLE		GATHER		H/K			H&S			SCC		
			# in EOS min	16–bit data words	# in EOS min	16–bit data words	inef-fi-cien-cies	word counts	total 16bit word in 65.536	inef-fi-cien-cies	word counts	total 16bit word in 65.536	inef-fi-cien-cies	word counts	total 16bit word in 65.536

DAS 6.2.1	1/1	0	64	8	56	2	N	2	128						
DAS 6.2.1	1/8				8	4	N	4	32	Y	4	32			
hidden inefficiencies:see PB reserved; odd number of 8–bits															

Note	Telemetry Point	Type	Board Address	Telemetry channel		Modulo	Window	Table #	Data Word	Start MSB	Length Bits	H&S Rate	H/K Rate	SCC Rate
4	ESA–1 Fine Roll Error	AA									8	1/8	1/1	
4	ESA–2 Fine Roll Error	AA									8	1/8	1/1	
4	ESA–1 Fine Pitch Error [5]	AA									8	1/8	1/1	
4	ESA–2 Fine Pitch Error [5]	AA									8	1/8	1/1	
4	ESA–1 Coarse Pitch Error	AA									8	1/8	1/8	
4	ESA–2 Coarse Pitch Error	AA									8	1/8	1/8	
4	ESA–1 Coarse Roll Error	AA									8	1/8	1/8	
4	ESA–2 Coarse Roll Error	AA									8	1/8	1/8	

Note:
1 EOS–DN–RES–027 1.2.5.5 DAS Waveguide (COMS)
2 EOS–DN–RES–027 1.2.5.6 DAS SSPA (COMS)
3 EOS–DN–RES–027 1.2.5.8 DAS Upconverter (COMS)
4 EOS–DN–RES–027 1.2.7.2 Earth Sensor (GN&C)
5 EOS–DN–RES–027 1.2.10.1 S/C structure (SMS)

FOOTNOTES:
[1] DAS Modulator Telemetry List—The DAS modulator interfaces with the DAS panel BDU.
[2] DAS Waveguide Switch Telemetry List—The DAS LO Cross–strap Switch interfaces with the DAS panel BDU. This switch cross–straps the two DAS Modulator IF outputs with the two DAS Upconverter IF inputs. Standard status monitoring only is required.
[3] Unique (internally cross–strapped)
[4] DAS SSPA Telemetry List—The DAS transmitters interface with the DAS BDU. Standard status monitoring only is required.
[5] Sampling rate of this telemetry can be reduced if there is a need for bandwidth
[6] SSM temp sensor are not firmly placed at this point. RWA has their bandwidth allocation.

6.2.2 BDU Sample Schedule Table 6.2.2

Sample Schedule Table	Rate	tlm sync hs	SSTABLE		GATHER		H/K			H&S			SCC		
			# in EOS min	16–bit data words	# in EOS min	16–bit data words	inef-fi-cien-cies	word counts	total 16bit word in 65.536	inef-fi-cien-cies	word counts	total 16bit word in 65.536	inef-fi-cien-cies	word counts	total 16bit word in 65.536

DAS 6.1.1	1/8	0	8	15	8	8	Y	8	64						
DAS 6.2.2	1/64									Y	8	8			
hidden inefficiencies:see PB reserved; odd number of 8–bits															

Note	Telemetry Point	Type	Board Address	Telemetry channel			Window	Table #	Data Word	Start MSB	Length Bits	H&S Rate	H/K Rate	SCC Rate
2	DAS SSPA EPC input Current1	AA							0		8	1/64	1/8	
2	DAS SSPA EPC input Current2	AA							0		8	1/64	1/8	
5	DAS Temp Status[6]1	PA							1		8	1/64	1/8	
5	DAS Temp Status[6]2	PA							1		8	1/64	1/8	
5	DAS Temp Status[6]3	PA							2		8	1/64	1/8	
5	DAS Temp Status[6]4	PA							2		8	1/64	1/8	
5	DAS Temp Status[6]5	PA							3		8	1/64	1/8	
5	DAS Temp Status[6]6	PA							3		8	1/64	1/8	
4	ESA–1 Scanner RPM	AA							4		8	1/64	1/8	
4	ESA–2 Scanner RPM	AA							4		8	1/64	1/8	
2	DAS SSPA Status (On/Off)1[7]	PB							5	0	1	1/64	1/8	
2	DAS SSPA Status (On/Off)2[8]	PB								1	1	1/64	1/8	
2	DAS SSPA Heater control relay status 1[1] (shared with Up converter)	PB								2	1	1/64	1/8	
2	DAS SSPA Heater control relay status 2[1] (shared with Up converter)	PB								3	1	1/64	1/8	
4	ESA–1 Heater Control Relay Status (scanner A)	PB								4	1	1/64	1/8	
4	ESA–1 Heater Control Relay Status (scanner B)	PB								5	1	1/64	1/8	
4	ESA–2 Heater Control Relay Status (scanner A)	PB								6	1	1/64	1/8	
4	ESA–2 Heater Control Relay Status (scanner B)	PB								7	1	1/64	1/8	
4	ESA–1 Torque Mode (Norm/High)	PB							5	8	1	1/64	1/8	
4	ESA–2 Torque Mode (Norm/High)	PB								9	1	1/64	1/8	
4	ESA–1 Angle Mode (wide/normal)	PB								10	1	1/64	1/8	

Note	Telemetry Point	Type	Board Address	Telemetry channel			Window	Table #	Data Word	Start MSB	Length Bits	H&S Rate	H/K Rate	SCC Rate
4	ESA–2 Angle Mode (wide/normal)	PB								11	1	1/64	1/8	
4	ESA–1 Leading Edge (Sun/No Sun)	PB								12	1	1/64	1/8	
4	ESA–2 Leading Edge (Sun/No Sun)	PB								13	1	1/64	1/8	
4	ESA–1 Trailing Edge (Sun/No Sun)	PB								14	1	1/64	1/8	
4	ESA–2 Trailing Edge (Sun/No Sun)	PB								15	1	1/64	1/8	
1	DAS Waveguide Switch Position Status[2][3]	PB							6	0	1	1/64	1/8	
6	DAS BDU Heater control relay status 1	PB								1	1	1/64	1/8	
6	DAS BDU Heater control relay status 2	PB								2	1	1/64	1/8	
	Reserved	PB								3–7	5	1/64	1/8	

Note:
1 EOS–DN–RES–027 1.2.5.5 DAS Waveguide (COMS)
2 EOS–DN–RES–027 1.2.5.6 DAS SSPA (COMS)
3 EOS–DN–RES–027 1.2.5.8 DAS Upconverter (COMS)
4 EOS–DN–RES–027 1.2.7.2 Earth Sensor (GN&C)
5 EOS–DN–RES–027 1.2.10.1 S/C structure (SMS)
6 EOS–DN–RES–027 1.2.2.6 BDU

FOOTNOTES:
[1] DAS Modulator Telemetry List—The DAS modulator interfaces with the DAS panel BDU.
[2] DAS Waveguide Switch Telemetry List—The DAS LO Cross–strap Switch interfaces with the DAS panel BDU. This switch cross–straps the two DAS Modulator IF outputs with the two DAS Upconverter IF inputs. Standard status monitoring only is required.
[3] Unique (internally cross–strapped)
[4] DAS SSPA Telemetry List—The DAS transmitters interface with the DAS BDU. Standard status monitoring only is required.
[5] Sampling rate of this telemetry can be reduced if there is a need for bandwidth
[6] SSM temp sensor are not firmly placed at this point. RWA has their bandwidth allocation.

6.2.3 BDU Sample Schedule Table 6.2.3

Sample Schedule Table	Rate	tlm sync hs	SSTABLE		GATHER		H/K			H&S			SCC		
			# in EOS min	16–bit data words	# in EOS min	16–bit data words	inefficiencies	word counts	total 16bit word in 65.536	inefficiencies	word counts	total 16bit word in 65.536	inefficiencies	word counts	total 16bit word in 65.536
DAS 6.2.3	1/8	0	8	16	7	2	N	2	14						

DAS 6.2.3	1/64				1	8	N	8	8	N	8	8			
hidden inefficiencies: none															

Note	Telemetry Point	Type	Board Address	Telemetry channel		Modulo	Window	Table #	Data Word	Start MSB	Length Bits	H&S Rate	H/K Rate	SCC Rate
6	DAS BDU EPC i/p current 1	AA							0		8	1/64	1/8	
6	DAS BDU EPC i/p current 2	AA									8	1/64	1/8	
6	DAS BDU EPC temperature1	PA							1		8	1/64	1/8	
6	DAS BDU EPC temperature2	PA									8	1/64	1/8	
2	DAS SSPA Baseplate Temperature1	PA							2		8	1/64	1/64	
2	DAS SSPA Baseplate Temperature2	PA									8	1/64	1/64	
2	DAS SSPA Baseplate Temperature3	PA							4		8	1/64	1/64	
2	DAS SSPA Baseplate Temperature4	PA									8	1/64	1/64	
3	DAS Upconverter Box Temperature1	PA							5		8	1/64	1/64	
3	DAS Upconverter Box Temperature2	PA									8	1/64	1/64	
4	ESA–1 Electronics Temperature	PA							6		8	1/64	1/64	
4	ESA–2 Electronics Temperature	PA									8	1/64	1/64	
4	ESA–1 Scanner Temperature	PA							7		8	1/64	1/64	
4	ESA–2 Scanner Temperature	PA									8	1/64	1/64	

Note:
1 EOS–DN–RES–027 1.2.5.5 DAS Waveguide (COMS)
2 EOS–DN–RES–027 1.2.5.6 DAS SSPA (COMS)
3 EOS–DN–RES–027 1.2.5.8 DAS Upconverter (COMS)
4 EOS–DN–RES–027 1.2.7.2 Earth Sensor (GN&C)
5 EOS–DN–RES–027 1.2.10.1 S/C structure (SMS)
6 EOS–DN–RES–027 1.2.6.1 BDU

7 COMM/C&DH BDU

Note Column:

1. EOS–DN–RES–027 1.2.5.1 COMS—S–band Transponder
   (2 serial point–to–point interfaces each interface has a Frame A and Frame B)
2. EOS–DN–RES–027 1.2.5.2 COMS—S–band Interface Unit (SBIU)
3. EOS–DN–RES–027 1.2.5.7 COMS—Master Oscillator (MO)
4. EOS–DN–RES–027 1.2.6.2 C&DH—Command and Telemetry Interface Unit (CTIU)
5. EOS–DN–RES–027 1.2.6.3 C&DH—Spacecraft Computer (SCC)
6. EOS–DN–RES–027 1.2.9.1 EPS—Sequential Shunt Unit (SSU)
   (2 serial point–to–point interfaces)
7. EOS–DN–RES–027 1.2.9.2 EPS—Solar Array Drive (SAD) and Array Drive Electronics (ADE)
   (2 serial point–to–point interfaces)
8. EOS–DN–RES–027 1.2.10.1 SMS—HGA Deployment System
9. EOS–DN–RES–027 1.2.10.2 SMS—SA Pyro telemetry

EPS Journal

on 7/30/93 met with calvin and angelo:
reviewed with him and made changes. printed copy and gave to EPS to take to Keith and Fritz.

SSU Serial I/O Interface: Processing Notes

read–out of telemetry can occur within 250 usecs of the telemetry synch execution
there are 17 tlm control words without counting the tlm synch. this means a minimum of three BDU sample schedule tables. one for both synchs (prime and redundant) and first set of telemetry (prime and redundant). one of prime side to read rest of telemetry and one to redundant side to read rest of telemetry. Betwen tlm synch serial buffer on both sides have to be read out. What is in DATA WORD and START MSB is strawman answer.

SAD & ADE Serial I/O Interface: Processing Notes

7/30/93 PER Dale Cobb—This is under reported amount since there is a prime and redundant side. Two BDU sample schedule tables minimally each containing a tlm synch at the beginning followed by the 4 read outs from the serial buffer (tlm readout can begin on next tlm control word following the tlm control word containing the tlm synch.

COMS Journal:

Tlm synch to S–band Xpndr 1 and Xpndr 2 is a delay of 1 msec. Tlm synch for frame A must be sent before readout of frame A occurs. Tlm synch for frame B must be sent before readout of frame B occurs.

C&DH Journal

Questions and followup:

[1] Dale C on ADE A array Rotation angles — didn't think I saw them in his list

[2]

Footnotes:

[1]

[2]

7.1 SCC Closed Loop

7.1.1 BDU Sample Schedule Table 7.1.1

Sample Schedule Table	Rate	tlm synchs	SSTABLE		GATHER		H/K			H&S			SCC		
			# in EOS min	16–bit data words	# in EOS min	16–bit data words	inef-fi-cien-cies	word counts	total 16bit word in 65.536	inef-fi-cien-cies	word counts	total 16bit word in 65.536	inef-fi-cien-cies	word counts	total 16bit word in 65.536
COM 7.1.1	.512	2	128	2	128	1							N	1	128

Note	1 prime 2 redundant Telemetry Point	Type	Board Address	Telemetry channel	Minor	Modulo	Window	Table #	Data Word	Start MSB	Length Bits	H&S Rate	H/K Rate	SCC Rate
	ADE A array Rotation angles	AA									8	–	–	.512
	ADE B array Rotation angles	AA									8	–	–	.512

7.2 Telemetry

7.2.1 BDU Sample Schedule Table 7.2.1

Sample Schedule Table	Rate	tlm synchs	SSTABLE		GATHER		H/K			H&S			SCC		
			# in EOS min	16–bit data words	# in EOS min	16–bit data words	inef-fi-cien-cies	word counts	total 16bit word in 65.536	inef-fi-cien-cies	word counts	total 16bit word in 65.536	inef-fi-cien-cies	word counts	total 16bit word in 65.536
COM 7.2.1	1/8	4	8	16	8	6	N	6	48						
COM 7.2.1	1/64									N	6	6			

4 tlm synchs; therefore maximum of 6 16–bit data words returned
hidden inefficiencies: partial PB (see reserved 12 bits whenever 1/64 tlm gather)
Note: see BDU Sample Schedule Tables 7.2.2 and 7.2.3 for rest of SSU serial I/O telemetry

Note	Telemetry Point	Type	Board Address	Telemetry channel	Minor	Modulo	Window	Table #	Data Word	Start MSB	Length Bits	H&S Rate	H/K Rate	SCC Rate
6.	tlm synch SSU prime								–	–	–	1/64	1/8	
6.	tlm synch SSU redundant								–	–	–	1/64	1/8	
1.	tlm synch Xpndr 1 Frame B								–	–	–	1/64	1/8	
1.	tlm synch Xpndr 2 Frame B								–	–	–	1/64	1/8	
6.	SAA Elevation Hinge Latched SSU Prime Part 1 of 2	S							0	0	1	1/64	1/8	
6.	Selected blanket–box seperation motor status SSU Prime Part 1 of 2	S								1	1	1/64	1/8	
6.	SAA Blanket Box Sep. sense SSU Prime Part 1 of 2	S								2	1	1/64	1/8	
6.	Mast motor inhibit override status SSU Prime Part 1 of 2	S								3	1	1/64	1/8	
6.	Selected mast deployment motor status SSU Prime Part 1 of 2	S								4	1	1/64	1/8	
6.	Motor direction status SSU Prime Part 1 of 2	S								5	1	1/64	1/8	
6.	SAA end of deploy sense SSU Prime Part 1 of 2	S								6	1	1/64	1/8	
6.	End of deployment limit switch override status SSU Prime Part 1 of 2	S								7	1	1/64	1/8	
6.	Heater control relay status SSU Prime Part 1 of 2	S							0	8	1	1/64	1/8	
6.	Heater control cross–couple status SSU Prime Part 1 of 2	S								9	1	1/64	1/8	
6.	SSU Shunt Status 1 ... 6 SSU Prime Part 1 of 2	S							0	10	~~32~~ 6	~~1/8~~ 1/64	~~1/1~~ 1/8	
6.	SAA Elevation Hinge Latched SSU Redundant Part 1 of 2	S							1	0	1	1/64	1/8	
6.	Selected blanket–box seperation motor status SSU Redundant Part 1 of 2	S								1	1	1/64	1/8	
6.	SAA Blanket Box Sep. sense SSU Redundant Part 1 of 2	S								2	1	1/64	1/8	
6.	Mast motor inhibit override status SSU Redundant Part 1 of 2	S								3	1	1/64	1/8	
6.	Selected mast deployment motor status SSU Redundant Part 1 of 2	S								4	1	1/64	1/8	

Note	Telemetry Point	Type	Board Address	Telemetry channel	Minor	Modulo	Window	Table #	Data Word	Start MSB	Length Bits	H&S Rate	H/K Rate	SCC Rate
6.	Motor direction status SSU Redundant Part 1 of 2	S								5	1	1/64	1/8	
6.	SAA end of deploy sense SSU Redundant Part 1 of 2	S								6	1	1/64	1/8	
6.	End of deployment limit switch override status SSU Redundant Part 1 of 2	S								7	1	1/64	1/8	
6.	Heater control relay status SSU Redundant Part 1 of 2	S							1	8	1	1/64	1/8	
6.	Heater control cross–couple status SSU Redundant Part 1 of 2	S								9	1	1/64	1/8	
6.	SSU Shunt Status 1 ... 6 SSU Redundant Part 1 of 2	S							1	10	~~32~~ 6	~~1/8~~ 1/64	~~1/1~~ 1/8	
7.	SAD/ADE EPC input current1	AA							2		8	1/64	1/8	
7.	SAD/ADE EPC input current2	AA							2		8	1/64	1/8	
9.	SAD–1 Relay Status A	PB							3	0	1	1/64	1/8	
9.	SAD–1 Relay Status B	PB								1	1	1/64	1/8	
9.	SAD–1 Relay Status C	PB								2	1	1/64	1/8	
9.	SAD–1 Relay Status D	PB								3	1	1/64	1/8	
9.	SAD–1 Relay Status E	PB								4	1	1/64	1/8	
9.	SAD–1 Relay Status F	PB								5	1	1/64	1/8	
2.	SBIU–1 RF Signal Routing A	PB								6	1	1/64	1/8	
2.	SBIU–1 RF Signal Routing B	PB								7	1	1/64	1/8	
9.	SAD–2 Relay Status A	PB								8	1	1/64	1/8	
9.	SAD–2 Relay Status B	PB								9	1	1/64	1/8	
9.	SAD–2 Relay Status C	PB								10	1	1/64	1/8	
9.	SAD–2 Relay Status D	PB								11	1	1/64	1/8	
9.	SAD–2 Relay Status E	PB								12	1	1/64	1/8	
9.	SAD–2 Relay Status F	PB								13	1	1/64	1/8	
2.	SBIU–2 RF Signal Rounting A	PB								14	1	1/64	1/8	
2.	SBIU–2 RF Signal Rounting B	PB								15	1	1/64	1/8	
5.	SCC–1 On/Off	PB							4	0	1	1/64	1/64	
8.	HGA–1 HCE relay status[2]	PB								1	1	1/64	1/64	
	Reserved	PB								2–7	6	1/64	1/64	

Note	Telemetry Point	Type	Board Address	Telemetry channel	Minor	Modulo	Window	Table #	Data Word	Start MSB	Length Bits	H&S Rate	H/K Rate	SCC Rate
5.	SCC–2 On/Off	PB								8	1	1/64	1/64	
8.	HGA–2 HCE relay status[2]	PB								9	1	1/64	1/64	
	Reserved	PB								10–15	6	1/64	1/64	
3.	MO–1 Temperature	PA							5		8	1/64	1/64	
3.	MO–2 Temperature	PA									8	1/64	1/64	

7.2.2 BDU Sample Schedule Table 7.2.2

Sample Schedule Table	Rate	tlm synchs	SSTABLE		GATHER		H/K			H&S			SCC		
			# in EOS min	16–bit data words	# in EOS min	16–bit data words	inefficiencies	word counts	total 16bit word in 65.536	inefficiencies	word counts	total 16bit word in 65.536	inefficiencies	word counts	total 16bit word in 65.536
COM 7.2.2	1/8	0	8	15	8	8	y	8	64						
COM 7.2.2	1/64									N	8	8			

hidden inefficiences: odd number of 8–bits returned + reserved
NOTE: Table 7.2.1 must be sent prior to this table since it contains the necessary telemetry synch
The read–out was split this way to avoid the splitting of a single data field between two telemetry fields [note: there are an odd number of data bits (SSU shunt status) followed by 8–bit data fields.

Note	Telemetry Point	Type	Board Address	Telemetry channel	Minor	Modulo	Window	Table #	Data Word	Start MSB	Length Bits	H&S Rate	H/K Rate	SCC Rate
6.	SSU Shunt Status 7 ... 28 SSU Prime Part 2 of 2	S							0	0	~~32~~ 22 6	~~1/8~~ 1/64	~~1/1~~ 1/8	
									1	0	6			
6.	SSU control voltage SSU Prime Part 2 of 2	S							1	6	8	1/64	1/8	

Note	Telemetry Point	Type	Board Address	Telemetry channel	Minor	Modulo	Window	Table #	Data Word	Start MSB	Length Bits	H&S Rate	H/K Rate	SCC Rate
6.	DEU ~~1(2)~~ converter output SSU Prime Part 2 of 2	S							1	15	8	1/64	1/8	
6.	SAA Elevation Hinge Position SSU Prime Part 2 of 2	S							2	6	8	~~1/8~~ 1/64	1/8	
6.	SAA Mast Rate of Deploy SSU Prime Part 2 of 2	S							2	15	8	~~1/8~~ 1/64	1/8	
6.	SAA Mast Motor Temp SSU Prime Part 2 of 2	S							3	6	8	1/64	1/8	
6.	SAA Isc n Curr ~~(n=2)~~ SSU Prime Part 2 of 2	S							3	15	8	1/64	1/8	
6.	SAA Isc n Temp ~~(n=2)~~ SSU Prime Part 2 of 2	S							4	6	8	1/64	1/8	
6.	SAA Voc n Volts ~~(n=2)~~ SSU Prime Part 2 of 2	S							4	15	8	1/64	1/8	
6.	SAA Voc n Temp ~~(n=2)~~ SSU Prime Part 2 of 2	S							5	6	8	1/64	1/8	
6.	~~SSU Shunt Temp 3(including two for the EPC)~~ EPC cross coupled input current SSU Prime Part 2 of 2	S							5	15	8	1/64	1/8 ~~1/64~~	
6.	EPC input currentSSU Prime Part 2 of 2	S							6	6	8	1/64	1/8	
6.	SSU ~~Shunt~~ Temp ~~(including two for the EPC)~~ SSU Prime Part 2 of 2	S							6	15	8	1/64	1/8 ~~1/64~~	
	Reserved								7	7	1			

7.2.3 BDU Sample Schedule Table 7.2.3

Sample Schedule Table	Rate	tlm sync hs	SSTABLE		GATHER		H/K			H&S			SCC		
			# in EOS min	16–bit data words	# in EOS min	16–bit data words	inefficiencies	word counts	total 16bit word in 65.536	inefficiencies	word counts	total 16bit word in 65.536	inefficiencies	word counts	total 16bit word in 65.536
COM 7.2.3	1/8	0	8	15	8	8	y	8	64						

COM 7.2.3	1/64									N	8	8			

hidden inefficiences:
NOTE: Table 7.2.1 must be sent prior to this table since it contains the necessary telemetry synch The read–out was split this way to avoid the splitting of a single data field between two telemetry fields [note: there are an odd number of data bits (SSU shunt status) followed by 8–bit data fields.

Note	Telemetry Point	Type	Board Address	Telemetry channel	Minor	Modulo	Window	Table #	Data Word	Start MSB	Length Bits	H&S Rate	H/K Rate	SCC Rate
6.	SSU Shunt Status 7 ... 28 SSU Redundant Part 2 of 2	S							0 1	0 0	~~32~~ 22	~~1/8~~ 1/64	~~1/1~~ 1/8	
6.	SSU control voltage SSU Redundant Part 2 of 2	S							1	6	8	1/64	1/8	
6.	DEU ~~1(2)~~ converter output SSU Redundant Part 2 of 2	S							1	15	8	1/64	1/8	
6.	SAA Elevation Hinge Position SSU Redundant Part 2 of 2	S							2	6	8	~~1/8~~ 1/64	1/8	
6.	SAA Mast Rate of Deploy SSU Redundant Part 2 of 2	S							2	15	8	~~1/8~~ 1/64	1/8	
6.	SAA Mast Motor Temp SSU Redundant Part 2 of 2	S							3	6	8	1/64	1/8	
6.	SAA Isc n Curr ~~(n=2)~~ SSU Redundant Part 2 of 2	S							3	15	8	1/64	1/8	
6.	SAA Isc n Temp ~~(n=2)~~ SSU Redundant Part 2 of 2	S							4	6	8	1/64	1/8	
6.	SAA Voc n Volts ~~(n=2)~~ SSU Redundant Part 2 of 2	S							4	15	8	1/64	1/8	
6.	SAA Voc n Temp ~~(n=2)~~ SSU Redundant Part 2 of 2	S							5	6	8	1/64	1/8	
6.	~~SSU Shunt Temp 3(including two for the EPC)~~ EPC cross coupled input current SSU Redundant Part 2 of 2	S							5	15	8	1/64	1/8 ~~1/64~~	
6.	EPC input current SSU Redundant Part 2 of 2	S							6	6	8	1/64	1/8	

Note	Telemetry Point	Type	Board Address	Telemetry channel	Minor	Modulo	Window	Table #	Data Word	Start MSB	Length Bits	H&S Rate	H/K Rate	SCC Rate
6.	SSU ~~Shunt~~ Temp 2 ~~(including two for the EPC)~~ SSU Redundant Part 2 of 2	S							6	15	8	1/64	1/8 ~~1/64~~	
	Reserved								7	7	1			

7.2.4 BDU Sample Schedule Table 7.2.4

Sample Schedule Table	Rate	tlm synchs	SSTABLE		GATHER		H/K			H&S			SCC		
			# in EOS min	16–bit data words	# in EOS min	16–bit data words	inefficiencies	word counts	total 16bit word in 65.536	inefficiencies	word counts	total 16bit word in 65.536	inefficiencies	word counts	total 16bit word in 65.536
COM 7.2.4	1/8	2	8	16	8	7	N	7	56						
COM 7.2.4	1/64									N	7	7			
2 tlm synchs limits max number hidden inefficiences none															

Note	1 prime 2 redundant Telemetry Point	Type	Board Address	Telemetry channel	Minor	Modulo	Window	Table #	Data Word	Start MSB	Length Bits	H&S Rate	H/K Rate	SCC Rate
7.	TLM Synch SAD/ADE prime	–									–	1/64	1/8	
7.	TLM Synch SAD/ADE redundant	–									–	1/64	1/8	
7.	SAD & ADE prime rate adjustment bit 8	S							0	0	1	1/64	1/8	
7.	SAD & ADE prime rate adjustment bit 7	S								1	1	1/64	1/8	
7.	SAD & ADE prime rate adjustment bit 6	S								2	1	1/64	1/8	
7.	SAD & ADE prime rate adjustment bit 5	S								3	1	1/64	1/8	
7.	SAD & ADE prime rate adjustment bit 4	S								4	1	1/64	1/8	

Note	1 prime 2 redundant Telemetry Point	Type	Board Address	Telemetry channel	Minor	Modulo	Window	Table #	Data Word	Start MSB	Length Bits	H&S Rate	H/K Rate	SCC Rate
7.	SAD & ADE prime rate adjustment bit 3	S								5	1	1/64	1/8	
7.	SAD & ADE prime rate adjustment bit 2	S								6	1	1/64	1/8	
7.	SAD & ADE prime rate adjustment bit 1	S								7	1	1/64	1/8	
7.	SAD & ADE prime rate adjustment bit 0	S								8	1	1/64	1/8	
7.	SAD & ADE data prime Motor On	S								9	1	1/64	1/8	
7.	SAD & ADE data prime Rate Select Bit 1	S								10	1	1/64	1/8	
7.	SAD & ADE data prime Rate Select Bit 2	S								11	1	1/64	1/8	
7.	SAD & ADE data prime SAD Direction	S								12	1	1/64	1/8	
7.	SAD & ADE data prime Command Direction	S								13	1	1/64	1/8	
7.	SAD & ADE data prime SA Deployed	S								14	1	1/64	1/8	
7.	SAD & ADE data prime SA Deployed Override	S								15	1	1/64	1/8	
7.	SAD & ADE data prime Safe Hold on/off	S							1	0	1	1/64	1/8	
7.	SAD & ADE data prime Safe Hold 1 Mode	S								1	1	1/64	1/8	
7.	SAD & ADE data prime Safe Hold 1 Mode Enable	S								2	1	1/64	1/8	
7.	SAD & ADE data prime Safe Hold 1 Mode Execute	S								3	1	1/64	1/8	
7.	SAD & ADE data prime Safe Hold 1 Rate Bit 1	S								4	1	1/64	1/8	
7.	SAD & ADE data prime Safe Hold 1 Rate Bit 2	S								5	1	1/64	1/8	
7.	SAD & ADE data prime Safe Hold 1 Indicator	S								6	1	1/64	1/8	
7.	SAD & ADE data prime ACE Safe Hold 1 Solar Array at Index	S								7	1	1/64	1/8	
7.	SAD & ADE data prime Safe Hold 2 On/Off	S								8	1	1/64	1/8	

Note	1 prime 2 redundant Telemetry Point	Type	Board Address	Telemetry channel	Minor	Modulo	Window	Table #	Data Word	Start MSB	Length Bits	H&S Rate	H/K Rate	SCC Rate
7.	SAD & ADE data prime Safe Hold 2 Mode	S								9	1	1/64	1/8	
7.	SAD & ADE data prime Safe Hold 2 Mode Enable	S								10	1	1/64	1/8	
7.	SAD & ADE data prime Safe Holde 2 Mode Execute	S								11	1	1/64	1/8	
7.	SAD & ADE data prime Safe Hold 2 Rate Bit 1	S								12	1	1/64	1/8	
7.	SAD & ADE data prime Safe Hold 2 Rate Bit 2	S								13	1	1/64	1/8	
7.	SAD & ADE data prime Safe Hold 2 Indicator	S								14	1	1/64	1/8	
7.	SAD & ADE data prime ACE Safe Holde 2 Solar Array at Index	S								15	1	1/64	1/8	
7.	SAD & ADE redundant rate adjustment bit 8	S							2	0	1	1/64	1/8	
7.	SAD & ADE redundant rate adjustment bit 7	S								1	1	1/64	1/8	
7.	SAD & ADE redundant rate adjustment bit 6	S								2	1	1/64	1/8	
7.	SAD & ADE redundant rate adjustment bit 5	S								3	1	1/64	1/8	
7.	SAD & ADE redundant rate adjustment bit 4	S								4	1	1/64	1/8	
7.	SAD & ADE redundant rate adjustment bit 3	S								5	1	1/64	1/8	
7.	SAD & ADE redundant rate adjustment bit 2	S								6	1	1/64	1/8	
7.	SAD & ADE redundant rate adjustment bit 1	S								7	1	1/64	1/8	
7.	SAD & ADE redundant rate adjustment bit 0	S								8	1	1/64	1/8	
7.	SAD & ADE data redundant Motor On	S								9	1	1/64	1/8	
7.	SAD & ADE data redundant Rate Select Bit 1	S								10	1	1/64	1/8	
7.	SAD & ADE data redundant Rate Select Bit 2	S								11	1	1/64	1/8	
7.	SAD & ADE data redundant SAD Direction	S								12	1	1/64	1/8	

Note	1 prime 2 redundant Telemetry Point	Type	Board Address	Telemetry channel	Minor	Modulo	Window	Table #	Data Word	Start MSB	Length Bits	H&S Rate	H/K Rate	SCC Rate
7.	SAD & ADE data redundant Command Direction	S								13	1	1/64	1/8	
7.	SAD & ADE data redundant SA Deployed	S								14	1	1/64	1/8	
7.	SAD & ADE data redundant SA Deployed Override	S								15	1	1/64	1/8	
7.	SAD & ADE data redundant Safe Hold on/off	S							3	0	1	1/64	1/8	
7.	SAD & ADE data redundant Safe Hold 1 Mode	S								1	1	1/64	1/8	
7.	SAD & ADE data redundant Safe Hold 1 Mode Enable	S								2	1	1/64	1/8	
7.	SAD & ADE data redundant Safe Hold 1 Mode Execute	S								3	1	1/64	1/8	
7.	SAD & ADE data redundant Safe Hold 1 Rate Bit 1	S								4	1	1/64	1/8	
7.	SAD & ADE data redundant Safe Hold 1 Rate Bit 2	S								5	1	1/64	1/8	
7.	SAD & ADE data redundant Safe Hold 1 Indicator	S								6	1	1/64	1/8	
7.	SAD & ADE data redundant ACE Safe Hold 1 Solar Array at Index	S								7	1	1/64	1/8	
7.	SAD & ADE data redundant Safe Hold 2 On/Off	S								8	1	1/64	1/8	
7.	SAD & ADE data redundant Safe Hold 2 Mode	S								9	1	1/64	1/8	
7.	SAD & ADE data redundant Safe Hold 2 Mode Enable	S								10	1	1/64	1/8	
7.	SAD & ADE data redundant Safe Holde 2 Mode Execute	S								11	1	1/64	1/8	
7.	SAD & ADE data redundant Safe Hold 2 Rate Bit 1	S								12	1	1/64	1/8	
7.	SAD & ADE data redundant Safe Hold 2 Rate Bit 2	S								13	1	1/64	1/8	
7.	SAD & ADE data redundant Safe Hold 2 Indicator	S								14	1	1/64	1/8	
7.	SAD & ADE data redundant ACE Safe Holde 2 Solar Array at Index	S								15	1	1/64	1/8	
7.	SAD stepper motor temperature	PA							4		8	1/64	1/8	
7.	SAD housing temperature	PA							4		8	1/64	1/8	
7.	ADE A temperature	PA							1		8	1/64	1/8	

Note	1 prime 2 redundant Telemetry Point	Type	Board Address	Telemetry channel	Minor	Modulo	Window	Table #	Data Word	Start MSB	Length Bits	H&S Rate	H/K Rate	SCC Rate
7.	ADE B temperature	PA							5		8	1/64	1/8	
7.	ADE A Position (SAD potnetiometer)	AA							6		8	1/64	1/8	
7.	ADE B Position (SAD potnetiometer)	AA							6		8	1/64	1/8	

7.2.5 BDU Sample Schedule Table 7.2.5

Sample Schedule Table	Rate	tlm sync hs	SSTABLE		GATHER		H/K			H&S			SCC		
			# in EOS min	16–bit data words	# in EOS min	16–bit data words	inef-fi-cien-cies	word counts	total 16bit word in 65.536	inef-fi-cien-cies	word counts	total 16bit word in 65.536	inef-fi-cien-cies	word counts	total 16bit word in 65.536
COM 7.2.5	1/8	0	8	16	8	8	Y	8	64						
COM 7.2.5	1/64									Y	8	8			
hidden inefficiences: 6 bits for tlm gather — see reserved															

Note	1 prime 2 redundant Telemetry Point	Type	Board Address	Telemetry channel	Minor	Modulo	Window	Table #	Data Word	Start MSB	Length Bits	H&S Rate	H/K Rate	SCC Rate
5.	SCC–1 Heater Control Relay – A	AA							0		8	1/64	1/8	
5.	SCC–1 Heater Control Relay – B	AA							0		8	1/64	1/8	
5.	SCC–1 Heater Control Relay – C	AA							1		8	1/64	1/8	
5.	SCC–2 Heater Control Relay – A	AA							1		8	1/64	1/8	
5.	SCC–2 Heater Control Relay – B	AA							2		8	1/64	1/8	
5.	SCC–2 Heater Control Relay – C	AA							2		8	1/64	1/8	
5.	SCC–1 i/p current to BDU	AA							3		8	1/64	1/8	
5.	SCC–2 i/p current to BDU	AA							3		8	1/64	1/8	
5.	SCC–1 temperature —think this should be 1/64, 1/64	PA							4		8	1/64	1/8	
5.	SCC–2 temperature —think this should be 1/64, 1/64	PA							4		8	1/64	1/8	

Note	1 prime 2 redundant Telemetry Point	Type	Board Address	Telemetry channel	Minor	Modulo	Window	Table #	Data Word	Start MSB	Length Bits	H&S Rate	H/K Rate	SCC Rate
8.	HGA–1 Potentiometer status[2]	AA							5		8	1/64	1/8	
8.	HGA–2 Potentiometer status[2]	AA							5		8	1/64	1/8	
8.	HGA Temperature Status1	AA							6		8	1/64	1/8	
8.	HGA Temperature Status2	AA							6		8	1/64	1/8	
8.	HGA Temperature Status3	AA							7		8	1/64	1/8	
3.	MO–1 Power Status (On/Off)	PB								0	1	1/64	1/8	
7.	ADE Side A on/off status	PB								1	1	1/64	1/8	
7.	SAD Heater Control Relay Status1	PB								2	1	1/64	1/8	
4.	CTIU–1 Heater Control relay status A	PB								3	1	1/64	1/8	
4.	CTIU–1 Heater Control relay status B	PB								4	1	1/64	1/8	
	Reserved	PB								5–7	3	1/64	1/8	
3.	MO–2 Power Status (On/Off)	PB								8	1	1/64	1/8	
7.	ADE Side B on/off status	PB								9	1	1/64	1/8	
7.	SAD Heater Control Relay Status2	PB								10	1	1/64	1/8	
4.	CTIU–2 Heater Control relay status A	PB								11	1	1/64	1/8	
4.	CTIU–2 Heater Control relay status B	PB								12	1	1/64	1/8	
	Reserved	PB								13–15	3	1/64	1/8	

7.2.6 BDU Sample Schedule Table 7.2.6

Sample Schedule Table	Rate	tlm sync hs	SSTABLE		GATHER		H/K			H&S			SCC		
			# in EOS min	16–bit data words	# in EOS min	16–bit data words	inefficiencies	word counts	total 16bit word in 65.536	inefficiencies	word counts	total 16bit word in 65.536	inefficiencies	word counts	total 16bit word in 65.536
COM 7.2.6	1/8	0	8	4	7	2	N	8	16						
COM 7.2.6	1/64				1	4				N	1	4			

Note	1 prime 2 redundant Telemetry Point	Type	Board Address	Telemetry channel	Minor	Modulo	Window	Table #	Data Word	Start MSB	Length Bits	H&S Rate	H/K Rate	SCC Rate
4	~~BDU EPC 1 i/p current~~	AA									8	1/64	1/8	
4	~~BDU EPC 2 i/p current~~	AA									8	1/64	1/8	
4	~~BDU EPC 1 temperature~~	PA									8	1/64	1/8	
4	~~BDU EPC 2 temperature~~	PA									8	1/64	1/8	
5	~~CTIU 1 i/p current to BDU~~	AA									8	1/64	1/8	
5	~~CTIU 2 i/p current to BDU~~	AA									8	1/64	1/8	
5	~~CTIU 1 box temperature~~	PA									8	1/64	1/8	
5	~~CTIU 2 box temperature~~	PA									8	1/64	1/8	
5	~~CTIU 1 Heater Control Relay A~~	AA									8	1/64	1/8	
5	~~CTIU 1 Heater Control Relay B~~	AA									8	1/64	1/8	
5	~~CTIU 2 Heater Control Relay A~~	AA									8	1/64	1/8	
5	~~CTIU 2 Heater Control Relay B~~	AA									8	1/64	1/8	
4.	CTIU–1 EPC +5 volts	AA							0		8	1/64	1/8	
4.	CTIU–2 EPC +5 volts	AA									8	1/64	1/8	
4.	CTIU–1 Temperature	PA							1		8	1/64	1/64	
4.	CTIU–2 Temperature	PA									8	1/64	1/64	

7.2.7 BDU Sample Schedule Table 7.2.7

Sample Schedule Table	Rate	tlm sync hs	SSTABLE		GATHER		H/K			H&S			SCC		
			# in EOS min	16–bit data words	# in EOS min	16–bit data words	inef-fi-cien-cies	word counts	total 16bit word in 65.536	inef-fi-cien-cies	word counts	total 16bit word in 65.536	inef-fi-cien-cies	word counts	total 16bit word in 65.536
COM 7.2.7	1/1	8	64	16	64	4	N	4	256						
COM 7.2.7	1/1									N	64	256			
7.2.7 processed before 7.2.8 processed before															

	Frame A part 1 of 3 Telemetry Point	Type	Broad Address	Telem-etry channel					Data Word	Start MSB	length Bits	H&S TLM Rate	H/K TLM Rate	SC Closed Loop Rate
1.	tlm synch xpndr 1 frame A								–	–	–	1/1	1/1	
1.	tlm synch xpndr 2 frame A								–	–	–	1/1	1/1	
1.	No-op													
1.	No-op													
1.	No-op													
1.	No-op													
1.	No-op													
1.	No-op													
1.	Xpndr 1 Receiver Processing State[1]	S							0	0	4	1/1	1/1	
1.	Xpndr 1 PN Lock Status[1]	S								4	1	1/1	1/1	
1.	Xpndr 1 Subcarrier Lock Status[1]	S								5	1	1/1	1/1	
1.	Xpndr 1 TDRSS/STDN Mode Status[1]	S								6	1	1/1	1/1	
1.	Xpndr 1 Doppler Initiator Selected[1]	S								7	1	1/1	1/1	
1.	Xpndr 1 Carrier Lock Status[1]	S								8	1	1/1	1/1	
1.	Xpndr 1 Detector Lock Status[1]	S								9	1	1/1	1/1	
1.	Xpndr 1 Long Code Sync Status[1]	S								10	1	1/1	1/1	
1.	Xpndr 1 Cycle Slip Detected[1]	S								11	1	1/1	1/1	
1.	Xpndr 1 Slow Squelch Status[1]	S								12	1	1/1	1/1	
1.	Xpndr 1 CW Detect[1]	S								13	1	1/1	1/1	
1.	Xpndr 1 Reserved	S								14	1	1/1†	1/1†	
1.	Xpndr 1 Transponder Address[1]	S								15	1	1/1	1/1	
1.	Xpndr 1 Command Data Rate	S							1	0	3	1/1*	1/1*	
1.	Xpndr 1 Digital AGC[1]	S								4	13	1/1	1/1	
1.	Xpndr 1 Wideband AGC	S							2	0	8	1/1	1/1	
1.	Xpndr 2 Receiver Processing State[1]	S								8	4	1/1	1/1	
1.	Xpndr 2 PN Lock Status[1]	S								12	1	1/1	1/1	
1.	Xpndr 2 Subcarrier Lock Status[1]	S								13	1	1/1	1/1	
1.	Xpndr 2 TDRSS/STDN Mode Status[1]	S								14	1	1/1	1/1	
1.	Xpndr 2 Doppler Initiator Selected[1]	S								15	1	1/1	1/1	
1.	Xpndr 2 Carrier Lock Status[1]	S							3	0	1	1/1	1/1	
1.	Xpndr 2 Detector Lock Status[1]	S								1	1	1/1	1/1	

	Frame A part 1 of 3 Telemetry Point	Type	Broad Address	Telem-etry channel					Data Word	Start MSB	length Bits	H&S TLM Rate	H/K TLM Rate	SCC Closed Loop Rate
1.	Xpndr 2 Long Code Sync Status[1]	S								2	1	1/1	1/1	
1.	Xpndr 2 Cycle Slip Detected[1]	S								3	1	1/1	1/1	
1.	Xpndr 2 Slow Squelch Status[1]	S								4	1	1/1	1/1	
1.	Xpndr 2 CW Detect[1]	S								5	1	1/1	1/1	
1.	Xpndr 2 Reserved	S								6	1	1/1†	1/1†	
1.	Xpndr 2 Transponder Address[1]	S								7	1	1/1	1/1	
1.	Xpndr 2 Command Data Rate	S								8	3	1/1*	1/1*	
1.	Xpndr 2 Digital AGC[1]	S								11	13	1/1	1/1	
1.	Xpndr 2 Wideband AGC	S							3	8	8	1/1	1/1	

*: Rate could have been less but location forced it to different rate
Note 1: Required for TONS simulation

†: Reserved (filler/don't care)
Note 1: Required for TONS simulation

[1]: Used for TONS simulation on Ground

[2]: Must begin on 16–bit Word Boundary

7.2.8 BDU Sample Schedule Table 7.2.8

Sample Schedule Table	Rate	tlm sync hs	SSTABLE		GATHER		H/K			H&S			SCC		
			# in EOS min	16–bit data words	# in EOS min	16–bit data words	inef-fi-cien-cies	word counts	total 16bit word in 65.536	inef-fi-cien-cies	word counts	total 16bit word in 65.536	inef-fi-cien-cies	word counts	total 16bit word in 65.536
COM 7.2.8	1/8	8	8	12	8	6	N	6	48						
COM 7.2.8	1/8									N	6	48			

ELliott can I gather second part of this data on another minor cycle.

	Frame A Part 2 of 3 Telemetry Point	Type	Broad Address	Telem-etry channel					Data Word	Start MSB	length Bits	H&S TLM Rate	H/K TLM Rate	SCC Rate
1.	Xpndr 1 Reserved	S							0	8	1	1/8†	1/8†	
1.	Xpndr 1 Selected PN Code	S								9	7	1/8	1/8	
1.	Xpndr 1 Receiver Frequency[2]	S							1,2	0	32	1/8	1/8	
1.	Xpndr 2 Reserved	S							3	8	1	1/8†	1/8†	
1.	Xpndr 2 Selected PN Code	S								9	7	1/8	1/8	
1.	Xpndr 2 Receiver Frequency[2]	S							4,5	0	32	1/8	1/8	

*: Rate could have been less but location forced it to different rate
Note 1: Required for TONS simulation

†: Reserved (filler/don't care)
Note 1: Required for TONS simulation

[1]: Used for TONS simulation on Ground

[2]: Must begin on 16–bit Word Boundary

7.2.9 BDU Sample Schedule Table 7.2.9

Sample Schedule Table	Rate	tlm sync hs	SSTABLE		GATHER		H/K			H&S			SCC		
			# in EOS min	16–bit data words	# in EOS min	16–bit data words	inef-fi-cien-cies	word counts	total 16bit word in 65.536	inef-fi-cien-cies	word counts	total 16bit word in 65.536	inef-fi-cien-cies	word counts	total 16bit word in 65.536
COM 7.2.9	1/8	8	8	14	8	7	N	7	56						
COM 7.2.9	1/64									N	7	7			

ELliott can I gather second part of this data on another minor cycle.

	Frame A –part 3 of 3 Telemetry Point	Type	Broad Address	Telem-etry channel					Data Word	Start MSB	length Bits	H&S TLM Rate	H/K TLM Rate	SCC Rate
1.	Xpndr 1 Frame A Identifier	S							0	0	1	1/64	1/8	
1.	Xpndr 1 Reserved	S								1	1	1/64 †	1/8†	
1.	Xpndr 1 Receiver Offset Freq. Word	S								2	13	1/64	1/8	
1.	Xpndr 1 Reserved	S							1	0	1	1/64 †	1/8†	
1.	Xpndr 1 MO/TCXO Select	S								1	1	1/64	1/8	
1.	Xpndr 1 MO A/B Selected	S								2	1	1/64	1/8	
1.	Xpndr 1 Transmitter Offset Freq. Word	S								3	13	1/64	1/8	
1.	Xpndr 1 Rec. 1st LO Static Phase Error	S							2	0	8	1/64	1/8	
1.	Xpndr 1 Xmit 2st LO Static Phase Error	S							3	8	8	1/64	1/8	
1.	Xpndr 2 Frame A Identifier	S							4	0	1	1/64	1/8	
1.	Xpndr 2 Reserved	S								1	1	1/64 †	1/8†	
1.	Xpndr 2 Receiver Offset Freq. Word	S								2	13	1/64	1/8	
1.	Xpndr 2 Reserved	S							5	0	1	1/64 †	1/8†	
1.	Xpndr 2 MO/TCXO Select	S								1	1	1/64	1/8	
1.	Xpndr 2 MO A/B Selected	S								2	1	1/64	1/8	
1.	Xpndr 2 Transmitter Offset Freq. Word	S								3	13	1/64	1/8	
1.	Xpndr 2 Rec. 1st LO Static Phase Error	S							6	0	8	1/64	1/8	
1.	Xpndr 2 Xmit 2st LO Static Phase Error	S							6	8	8	1/64	1/8	

*: Rate could have been less but location forced it to different rate

Note 1: Required for TONS simulation

†: Reserved (filler/don't care)

Note 1: Required for TONS simulation

[1]: Used for TONS simulation on Ground

[2]: Must begin on 16–bit Word Boundary

7.2.10 BDU Sample Schedule Table 7.2.10

Sample Schedule Table	Rate	tlm sync hs	SSTABLE		GATHER		H/K			H&S			SCC		
			# in EOS min	16–bit data words	# in EOS min	16–bit data words	inef-fi-cien-cies	word counts	total 16bit word in 65.536	inef-fi-cien-cies	word counts	total 16bit word in 65.536	inef-fi-cien-cies	word counts	total 16bit word in 65.536
COM 7.2.10	1/8	8	8	16	8	8	N	8	64						
COM 7.2.10	1/8									N	8	64			
ELliott can I gather second part of this data on another minor cycle.															

	Frame B Part 1 of 2		Board	Telem-etry					Data	Start	Length	H&S	H/K	SCC
	Telemetry Point	Type	Ad-dress	Chan-nel					Word	MSB	Bits	Rate	Rate	Rate
1.	Xpndr 1 Doppler Frequency Sum	S							0–3	0	64	1/8	1/8	
1.	Xpndr 2 Doppler Frequency Sum	S							4–7	0	64	1/8	1/8	

7.2.11 BDU Sample Schedule Table 7.2.11

Sample Schedule Table	Rate	tlm sync hs	SSTABLE		GATHER		H/K			H&S			SCC		
			# in EOS min	16–bit data words	# in EOS min	16–bit data words	inef-fi-cien-cies	word counts	total 16bit word in 65.536	inef-fi-cien-cies	word counts	total 16bit word in 65.536	inef-fi-cien-cies	word counts	total 16bit word in 65.536
COM 7.2.11	1/8	8	8	16	7	6	N	8	48						
COM 7.2.11	1/64				1	8				N	8	8			

	Frame B Part 2 of 2		Board	Telem-etry					Data	Start	Length	H&S	H/K	SCC
	Telemetry Point	Type	Ad-dress	Chan-nel					Word	MSB	Bits	Rate	Rate	Rate
1.	Xpndr 1 Channel 2 Telemetry Status	S							0	0	1	1/64	1/8	
1.	Xpndr 1 Channel 2 Telemetry Input Selected	S								1	1	1/64	1/8	

	Frame B Part 2 of 2 Telemetry Point	Type	Board Address	Telemetry Channel					Data Word	Start MSB	Length Bits	H&S Rate	H/K Rate	SCC Rate
1.	Xpndr 1 Channel 1 Telemetry Status	S								2	1	1/64	1/8	
1.	Xpndr 1 Channel 1 Telemetry Input Selected	S								3	1	1/64	1/8	
1.	Xpndr 1 Channel 2 Encoder Status	S								4	1	1/64	1/8	
1.	Xpndr 1 Cannel 1 Encoder Status	S								5	1	1/64	1/8	
1.	Xpndr 1 Q PN Code Status	S								6	1	1/64	1/8	
1.	Xpndr 1 I PN Code Status	S								7	1	1/64	1/8	
1.	Xpndr 1 Transmitter Auto–Coh. Status	S								8	1	1/64	1/8	
1.	Xpndr 1 Transmitter Auto–On Status	S								9	1	1/64	1/8	
1.	Xpndr 1 Transmitter Mode Status	S								10	3	1/64	1/8	
1.	Xpndr 1 Q Channel Interleaver Status	S								13	1	1/64	1/8	
1.	Xpndr 1 Transmitter Coherency Status	S								14	1	1/64	1/8	
1.	Xpndr 1 Transmitter Power Status	S								15	1	1/64	1/8	
1.	Xpndr 1 Receiver Current *[moved location]*	S							1	0	8	1/64	1/8	
1.	Xpndr 1 Frame B Identifier *(always 1)*	S								8	1	1/64	1/8	
1.	Xpndr 1 Reserved									9	5	1/64 *	1/8*	
1.	Xpndr 1 Q/I Power Ratio	S								14	2	1/64	1/8	
1.	Xpndr 1 Transmitter Current	S							2	0	8	1/64	1/8	
1.	Xpndr 1 Forward RF Power	S								8	8	1/64	1/8	
1.	Xpndr 2 Channel 2 Telemetry Status	S							3	0	1	1/64	1/8	
1.	Xpndr 2 Channel 2 Telemetry Input Selected	S								1	1	1/64	1/8	
1.	Xpndr 2 Channel 1 Telemetry Status	S								2	1	1/64	1/8	
1.	Xpndr 2 Channel 1 Telemetry Input Selected	S								3	1	1/64	1/8	
1.	Xpndr 2 Channel 2 Encoder Status	S								4	1	1/64	1/8	
1.	Xpndr 2 Cannel 1 Encoder Status	S								5	1	1/64	1/8	
1.	Xpndr 2 Q PN Code Status	S								6	1	1/64	1/8	
1.	Xpndr 2 I PN Code Status	S								7	1	1/64	1/8	
1.	Xpndr 2 Transmitter Auto–Coh. Status	S								8	1	1/64	1/8	
1.	Xpndr 2 Transmitter Auto–On Status	S								9	1	1/64	1/8	
1.	Xpndr 2 Transmitter Mode Status	S								10	3	1/64	1/8	

	Frame B Part 2 of 2 Telemetry Point	Type	Board Address	Telemetry Channel					Data Word	Start MSB	Length Bits	H&S Rate	H/K Rate	SCC Rate
1.	Xpndr 2 Q Channel Interleaver Status	S								13	1	1/64	1/8	
1.	Xpndr 2 Transmitter Coherency Status	S								14	1	1/64	1/8	
1.	Xpndr 2 Transmitter Power Status	S								15	1	1/64	1/8	
1.	Xpndr 2 Receiver Current *[moved location]*	S							4	0	8	1/64	1/8	
1.	Xpndr 2 Frame B Identifier *(always 1)*	S								8	1	1/64	1/8	
1.	Xpndr 2 Reserved									9	5	1/64 *	1/8*	
1.	Xpndr 2 Q/I Power Ratio	S								14	2	1/64	1/8	
1.	Xpndr 2 Transmitter Current	S							5	0	8	1/64	1/8	
1.	Xpndr 2 Forward RF Power	S								8	8	1/64	1/8	
1.	Xpndr 1 Oscillator Temperature	S							6	0	8	1/64	1/64	
1.	Xpndr 1 Power Amplifier Temperature	S								8	8	1/64	1/64	
1.	Xpndr 2 Oscillator Temperature	S							7	0	8	1/64	1/64	
1.	Xpndr 2 Power Amplifier Temperature	S								8	8	1/64	1/64	

*: Rate could have been less but location forced it to different rate

Note 1: Required for TONS simulation

7.2.12 BDU Sample Schedule Table 7.2.12

Sample Schedule Table	Rate	tlm sync hs	SSTABLE		GATHER		H/K			H&S			SCC		
			# in EOS min	16–bit data words	# in EOS min	16–bit data words	inefficiencies	word counts	total 16bit word in 65.536	inefficiencies	word counts	total 16bit word in 65.536	inefficiencies	word counts	total 16bit word in 65.536
COM 7.2.12	1/1	8	64	2	64	1	Y	1	64						
COM 7.2.12	1/64									Y	1	1			

Inefficiency very high

5.	SCC–*1* OK signal	PB							4	0	1	1/64	1/1	
	Reserved	PB								1–7	7	1/64	1/1	
5.	SCC–2 OK signal	PB								8	1	1/64	1/1	
	Reserved	PB								9–15	7	1/64	1/1	

8 MODIS BDU

8.1 SCC Closed Loop

Not Applicable

8.2

8.2.1 BDU Sample Schedule Table 8.2.1

1/8 H/K Word count=2
1/64 H/K, H&S Word count=3
hidden inefficiencies: see Reserverd PB both on 1/8 and 1/64; odd number of 8 bits

Note	PRIME Side Redundant Telemetry Point	Type	Board Address	Telemetry channel					Data Word	Start MSB	Length Bits	H&S Rate	H/K Rate	SCC Rate
1	BDU–MODIS EPC i/p current1	AA							0		8	1/64	1/8	
1	BDU–MODIS EPC i/p current2	AA									8	1/64	1/8	
1	BDU–MODIS Heater Control Relay Status2	PB							1	0	1	1/64	1/8	
1	BDU–MODIS Heater Control Relay Status2	PB								1	1	1/64	1/8	
	Reserved	PB								2–7	6	1/64	1/8	
1	BDU–MODIS Temperature1	PA							1		8	1/64	1/64	
1	BDU–MODIS Temperature2	PA							2		8	1/64	1/64	

Note:
1 EOS–DN–RES–027 1.2.6.1 BDU data

9 ASTER BDU

9.1 SCC Closed Loop

Not Applicable

9.2

9.2.1 BDU Sample Schedule Table 9.2.1

1/8 H/K Word count=2
1/64 H/K, H&S Word count=3
hidden inefficiencies: see Reserverd PB both on 1/8 and 1/64; odd number of 8 bits

Note	PRIME Side Redundant Telemetry Point	Type	Board Address	Telemetry channel					Data Word	Start MSB	Length Bits	H&S Rate	H/K Rate	SCC Rate
1	BDU–ASTER EPC i/p current1	AA							0		8	1/64	1/8	
1	BDU–ASTER EPC i/p current2	AA									8	1/64	1/8	
1	BDU–ASTER Heater Control Relay Status2	PB							1	0	1	1/64	1/8	
1	BDU–ASTER Heater Control Relay Status2	PB								1	1	1/64	1/8	
	Reserved	PB								2–7	6	1/64	1/8	
1	BDU–ASTER Temperature1	PA							1		8	1/64	1/64	
1	BDU–ASTER Temperature2	PA							2		8	1/64	1/64	

Note:
1 EOS–DN–RES–027 1.2.6.1 BDU data

10 MOPITT/CERES/MISR BDU

10.1 SCC Closed Loop

Not Applicable

10.2

10.2.1 BDU Sample Schedule Table 10.2.1

1/8 H/K Word count=2
1/64 H/K, H&S Word count=3
hidden inefficiencies: see Reserverd PB both on 1/8 and 1/64; odd number of 8 bits

Note	PRIME Side Redundant Telemetry Point	Type	Board Address	Telemetry channel					Data Word	Start MSB	Length Bits	H&S Rate	H/K Rate	SCC Rate
1	BDU–MOPITT/CERES/MISR EPC i/p current1	AA							0		8	1/64	1/8	
1	BDU–MOPITT/CERES/MISR EPC i/p current2	AA									8	1/64	1/8	
1	BDU–MOPITT/CERES/MISR Heater Control Relay Status2	PB							1	0	1	1/64	1/8	
1	BDU–MOPITT/CERES/MISR Heater Control Relay Status2	PB								1	1	1/64	1/8	
	Reserved	PB								2–7	6	1/64	1/8	
1	BDU–MOPITT/CERES/MISR Temperature1	PA							1		8	1/64	1/64	
1	BDU–MOPITT/CERES/MISR Temperature2	PA							2		8	1/64	1/64	

Note:
1 EOS–DN–RES–027 1.2.6.1 BDU data

11 Recorder Equipment BDU

Sample Schedule Table	Rate	H/K				H&S				KSA 1	DSA 2	SFE 3	SSR 4
		tlm sync hs	inef-fi-cien-cies	word counts	total 16bit word in 65.536	tlm sync hs	inef-fi-cien-cies	word counts	total 16bit word in 65.536	H/K H&S			
REC 11.2.1	1/8 1/64	4	Y 16	6 (5.5)	48	4	Y 3.5	(5.5)	6	2.75	2.375	.25	.125
REC 11.2.2	1/8 –	1	Y 3	5	40	–	–	–	–			5	
REC 11.2.3	1/8,–	1	Y 3	5	40	–	–	–	–			5	
REC 11.2.4	1/8 1/64	1	Y 1	7	56	1	Y 1/8	7	7	1	1.5		4.5
REC 11.2.5	1/8 1/64	1	Y 1	6	48	1	Y 1/16	6	6		.5		5.5
REC 11.2.6	1/8 –	1	N	6	48	–	–	–	–			1.5	4.5
REC 11.2.7	1/8 –	1	N	5	40	–	–	–	–			.5	4.5
REC 11.2.8	1/64 1/64	0	N	4	4	0	N	4	4	1	1		2
total					324				23	3.75 *8 ——— 1*1 ——— 31	4.375 *8 ——— 1*1 ——— 36	12.25 *8 ——— 98	19.125 *8 ——— 1*2 ——— 155
total										2.75 1.00 1.00 ——— 4.750	2.375 1.500 .500 1.000 ——— 5.375	.25 ——— .25	.125 4.500 5.500 2.000 ——— 12.125

REC BDU—for bus utilization analysis

BDU SS 1/8		TLM Gather	
1	@7.5wc		@5.5wc
3	@5.5wc		@5wc
1	@7.5wc		@7wc
1	@6.5wc		@6wc
1	@5.5wc		@5wc
BDU SS 1/64			
1	@4wc		@4WC

REC BDU for Bandwidth Analysis

Notes Column	H/K			H&S		
	DN–RES–027	16–bit words/65.536 seconds	Actuals	DN–RES–027	16–bit words/65.536 seconds	Actuals
KSA	9	36.9	31 under 5.9	1.3	5.3	4.75 under .55
DAS	9	36.9	36 under .9	1.3	5.3	5.375 over .075
SFE	14	57.3	98 over 40.7	.06	.3	.25 under .5
SSR	29.19	119.6	155 over 35.4	6.27	25.7	12.125 under 13.575
total for REC BDU	61.19	253.7[1]	324 over 70.3	8.93	36.6[1]	23 under 13.6

Note Column:

1 DN–RES–027 Rev E, 1.2.5.3, COMS, Ku–band Single Access (KSA) Modulator Telemetry List

2 DN–RES–027 Rev E, 1.2.5.4, COMS, Direct Single Access (DSA) Modulator Telemetry

3 DN–RES–027 Rev E, 1.2.6.4, C&DH, Science Formatting Equipment (SFE) (TBR)

SFE delta cost with update 1–2 months will impact this telemetry data—as of July 7, 1993 per Joe Sansino

Found differences:
Only one of the two serial interfaces was accounted for.
Also, the temperature and supply voltages were treated as serial but shoul have been analog

4 DN–RES–027 Rev E, 1.2.6.5, and 1.2.6.6.,C&DHS, Solid state Recorder

differences:
an update of individual data has been incorporated,

[1]

H/K
(61.19*65.536) / (16) = 253.78 words per EOS minute
H&S
(8.93*65.536) / (16) = 36.6 words per EOS minute

11.1 SCC Closed Loop

N/A

11.2 Telemetry

11.2.1 BDU Sample Schedule Table 11.2.1

Ku–band Single Access (KSA) Modulator Telemetry: There are two point–to–point I/O interfaces with the BDU. Each is represented below.

DAS Modulator Telemetry List: There are two point–to–point I/O interfaces with the BDU. Each is represented below.

Sample Schedule Table	Rate	tlm sync hs	SSTABLE		GATHER		H/K			H&S			SCC		
			# in EOS min	16–bit data words	# in EOS min	16–bit data words	inef-fi-cien-cies	word counts	total 16bit word in 65.536	inef-fi-cien-cies	word counts	total 16bit word in 65.536	inef-fi-cien-cies	word counts	total 16bit word in 65.536
REC 11.2.1	1/8	4	8	16	8	6	Y	6	48						
REC 11.2.1	1/64									Y	6	6			
INEFFICIENCIES: PB reserved															

Sample Schedule Table	Rate	H/K				H&S				KSA 1	DSA 2	SFE 3	SSR 4
		tlm sync hs	inef-fi-cien-cies	word counts	total 16bit word in 65.536	tlm sync hs	inef-fi-cien-cies	word counts	total 16bit word in 65.536	H/K H&S			
REC 11.2.1	1/8 1/64	4	Y 16	6	44	4	Y 3.5	6	6	2.75	2.375	.25	.125

										2.75	2.375	.25	.125

H/K=1 tlm gather request * 8 major cycles * 6 16–bit data words
inefficiencies: 7 bits per telemetry gather KSA–1
7 bits per telemetry gather KSA–2
7 bits per telemetry gather DAS–1
7 bits per telemetry gather DAS–2
ODD Number of 8 bits returned
H&S=1 tlm gather request * 1 major cycles * 6 16–bit data words
inefficiencies: 7 bits per telemetry gather
7 bits per telemetry gather KSA–2
7 bits per telemetry gather DAS–1
7 bits per telemetry gather DAS–2
ODD Number of 8 bits returned

Note	Telemetry Point	Type	Board Address	Telemetry Channel	Data Word	Start MSB	Length Bits	H&S Rate	H/K Rate	SCC Rate
	KSAM–1 tlm synch	–					–	1/64	1/8	
1	KSAM–1 Modulator Mode (1 or PN)[1]	S			0	0	1	1/64	1/8	
1	KSAM–1 Input Clock Switch	S				1	1	1/64	1/8	
1	KSAM–1 IF Carrier Phase Lock	S				2	1	1/64	1/8	
1	KSAM–1 150 MHz PLL Status	S				3	1	1/64	1/8	
1	KSAM–1 On–Line/Standby Status	S				4	1	1/64	1/8	
1	KSAM–1 EPC 1 Fail Status	S				5	1	1/64	1/8	
1	KSAM–1 EPC 1 Fail Status	S				6	1	1/64	1/8	
1	KSAM–1 EPC 2 Fail Status	S				7	1	1/64	1/8	
1	KSAM–1 EPC 2 Fail Status	S				8	1	1/64	1/8	
	KSAM–1 Reserved Telemetry	S				9–15	7	1/64	1/8	
	KSAM–2 tlm synch	–					–	1/64	1/8	
1	KSAM–2 Modulator Mode (1 or PN)[1]	S			1	0	1	1/64	1/8	
1	KSAM–2 Input Clock Switch	S				1	1	1/64	1/8	
1	KSAM–2 IF Carrier Phase Lock	S				2	1	1/64	1/8	
1	KSAM–2 150 MHz PLL Status	S				3	1	1/64	1/8	
1	KSAM–2 On–Line/Standby Status	S				4	1	1/64	1/8	
1	KSAM–2 EPC 1 Fail Status	S				5	1	1/64	1/8	
1	KSAM–2 EPC 1 Fail Status	S				6	1	1/64	1/8	
1	KSAM–2 EPC 2 Fail Status	S				7	1	1/64	1/8	

Note	Telemetry Point	Type	Board Address	Telemetry Channel	Data Word	Start MSB	Length Bits	H&S Rate	H/K Rate	SCC Rate
1	KSAM–2 EPC 2 Fail Status	S				8	1	1/64	1/8	
	KSAM–2 Reserved Telemetry	S				9–15	7	1/64	1/8	
	DAS–1 tlm synch	–					–	1/64	1/8	
2	DAS–1 Modulator Output Switch	S			2	0	1	1/64	1/8	
2	DAS–1 Modulator Mode (1,2,3 or PN)	S				1,2	2	1/64	1/8	
2	DAS–1 Modulator Input Clock Switch	S				3	1	1/64	1/8	
2	DAS–1 Modulator IF Carrier Phase Lock	S				4	1	1/64	1/8	
2	DAS–1 Modulator 150 MHz PLL Status	S				5	1	1/64	1/8	
2	DAS–1 Modulator 210 MHz PLL Status	S				6	1	1/64	1/8	
2	DAS–1 Modulator EPC 1 Fail Status	S				7	1	1/64	1/8	
2	DAS–1 Modulator EPC 2 Fail Status	S				8	1	1/64	1/8	
	DAS–1 Reserved Telemetry	S				9–15	7	1/64	1/8	
	DAS–2 tlm synch	–					–	1/64	1/8	
2	DAS–2 Modulator Output Switch	S			3	0	1	1/64	1/8	
2	DAS–2 Modulator Mode (1,2,3 or PN)	S				1	2	1/64	1/8	
2	DAS–2 Modulator Input Clock Switch	S				3	1	1/64	1/8	
2	DAS–2 Modulator IF Carrier Phase Lock	S				4	1	1/64	1/8	
2	DAS–2 Modulator 150 MHz PLL Status	S				5	1	1/64	1/8	
2	DAS–2 Modulator 210 MHz PLL Status	S				6	1	1/64	1/8	
2	DAS–2 Modulator EPC 1 Fail Status	S				7	1	1/64	1/8	
2	DAS–2 Modulator EPC 2 Fail Status	S				8	1	1/64	1.8	
	DAS–2 Reserved Telemetry	S				9–15	7	1/64	1/8	
1	KSAM–1 EPC 1 Power Status	PB			4	0	1	1/64	1/8	
1	KSAM–2 EPC 1 Power Status	PB				1	1	1/64	1/8	
2	DAS Modulator Heater control relay status 1	PB				2	1	1/64	1/8	
2	DAS Modulator EPC 1 Power Status1	PB				3	1	1/64	1/8	

Note	Telemetry Point	Type	Board Address	Telemetry Channel	Data Word	Start MSB	Length Bits	H&S Rate	H/K Rate	SCC Rate
2	DAS Modulator EPC 1 Power Status2	PB				4	1	1/64	1/8	
3	SFE A Power On/Off	PB				5	1	1/64	1/8	
3	SFE Heater control relay status 1 *(shared with KSA modulator)	PB				6	1	1/64	1/8	
4	DCU–1 Power Status (on/off)	PB				7	1	1/64	1/8	
1	KSAM–1 EPC 2 Power Status	PB			4	0	1	1/64	1/8	
1	KSAM–2 EPC 2 Power Status	PB				1	1	1/64	1/8	
2	DAS Modulator Heater control relay status 2	PB				2	1	1/64	1/8	
2	DAS Modulator EPC 2 Power Status1	PB				3	1	1/64	1/8	
2	DAS Modulator EPC 2 Power Status2	PB				4	1	1/64	1/8	
3	SFE B Power On/Off	PB				5	1	1/64	1/8	
3	SFE Heater control relay status 2 *(shared with KSA modulator)	PB				6	1	1/64	1/8	
4	DCU–2 Power Status (on/off)	PB				7	1	1/64	1/8	
1	KSAM–1 EPC 1 Input Current	AA			5		8	1/64	1/8	
1	KSAM–2 EPC 1 Input Current	AA					8	1/64	1/8	

Note Column:

1 DN–RES–027 Rev E, 1.2.5.3, Ku–band Single Access (KSA) Modulator Telemetry List

2 DN–RES–027 Rev E, 1.2.5.4, Direct Single Access (DSA) Modulator Telemetry

3 DN–RES–027 Rev E, 1.2.6.4, Science Formatting Equipment (SFE) (TBR)

SFE delta cost with update 1–2 months will impact this telemetry data—as of July 7, 1993 per Joe Sansino

Found differences:
Only one of the two serial interfaces was accounted for.
Also, the temperature and supply voltages were treated as serial but shoul have been analog

4 DN–RES–027 Rev E, 1.2.6.5, and 1.2.6.6., SSR (TBR

differences:
an update of individual data has been incorporated, it was within the bandwidth allocation of the DN–RES–027 REV E

11.2.2 BDU Sample Schedule Table 11.2.2

Science Formatting Equipment (SFE) (TBR): The SFE A and SFE B each have a point–to–point I/O serial interface with the Recorder BDU.

Sample Schedule Table	Rate	tlm sync hs	SSTABLE		GATHER		H/K			H&S			SCC		
			# in EOS min	16–bit data words	# in EOS min	16–bit data words	inef-fi-cien-cies	word counts	total 16bit word in 65.536	inef-fi-cien-cies	word counts	total 16bit word in 65.536	inef-fi-cien-cies	word counts	total 16bit word in 65.536
REC 11.2.2	1/8	1	8	11	8	5	Y	5	40						
REC 11.2.2	–														
INEFFICIENCIES: PB reserved															

Sample Schedule Table	Rate	H/K				H&S				KSA 1	DSA 2	SFE 3	SSR 4
		tlm sync hs	inef-fi-cien-cies	word counts	total 16bit word in 65.536	tlm sync hs	inef-fi-cien-cies	word counts	total 16bit word in 65.536	H/K H&S			
REC 11.2.2	1/8 –	1	Y 3	5	40	–	–	–	–			5	
H/K=1 tlm gather request * 8 major cycles * 5 16–bit data words inefficiencies: 3 bits per tlm gather													

Note	Telemetry Point	Type	Board Address	Telemetry Channel	Data Word	Start MSB	Length Bits	H&S Rate	H/K Rate	SCC Rate
	SFE tlm synch A	–					–	–	1/8	
3	SFE A Bus Controller Status	S			0		8	–	1/8	
3	SFE A CH1 KSA Connection	S					8	–	1/8	
3	SFE A CH2 KSA Connection	S			1		8	–	1/8	
3	SFE A CH1 DAS Connection	S					8	–	1/8	
3	SFE A CH2 DAS Connection	S			2		8	–	1/8	
3	SFE A Internal Function Status	S					8	–	1/8	
3	SFE A High Rate interface Performance	S			3		8	–	1/8	
3	SFE A Science Bus Performance	S					8	–	1/8	
3	SFE A High rate interface Status 1	S			4	0	1	–	1/8	
3	SFE A High rate interface Status 2	S				1	1	–	1/8	

Note	Telemetry Point	Type	Board Address	Telemetry Channel	Data Word	Start MSB	Length Bits	H&S Rate	H/K Rate	SCC Rate
3	SFE A High rate interface Status 3	S				2	1	–	1/8	
3	SFE A High rate interface Status 4	S				3	1	–	1/8	
3	SFE A High rate interface Status 5	S				4	1	–	1/8	
3	SFE A High rate interface Status 6	S				5	1	–	1/8	
3	SFE A High rate interface Status 7	S				6	1	–	1/8	
3	SFE A High rate interface Status 8	S				7	1	–	1/8	
3	SFE A Science Bus Status (A–bus/B–bus primary and BC stub)	S				8	1	–	1/8	
3	SFE A KSA Modulator Status (A–side/B–side active)	S				9	1	–	1/8	
3	SFE A DAS Modulator Status (A–side/B–side active)	S				10	1	–	1/8	
3	SFE A Built–in Test Flag (Go/No Go)	S				11	1	–	1/8	
3	SFE A Clock Present Status (On/ Off)	S				12	1	–	1/8	
	Reserved					13	3	–	1/8	

Note Column:
1 DN–RES–027 Rev E, 1.2.5.3, Ku–band Single Access (KSA) Modulator Telemetry List
2 DN–RES–027 Rev E, 1.2.5.4, Direct Single Access (DSA) Modulator Telemetry
3 DN–RES–027 Rev E, 1.2.6.4, Science Formatting Equipment (SFE) (TBR)

SFE delta cost with update 1–2 months will impact this telemetry data—as of July 7, 1993 per Joe Sansino

Found differences:
Only one of the two serial interfaces was accounted for.
Also, the temperature and supply voltages were treated as serial but shoul have been analog

Processing Notes:
Tlm synch and first readout of 8 bits can occur in adjacent BDU telemetry control words in the same table.

11.2.3 BDU Sample Schedule Table 11.2.3

Science Formatting Equipment (SFE) (TBR): The SFE A and SFE B each have a point–to–point I/O serial interface with the Recorder BDU.

Sample Schedule Table	Rate	tlm sync hs	SSTABLE		GATHER		H/K			H&S			SCC		
			# in EOS min	16–bit data words	# in EOS min	16–bit data words	inef-fi-cien-cies	word counts	total 16bit word in 65.536	inef-fi-cien-cies	word counts	total 16bit word in 65.536	inef-fi-cien-cies	word counts	total 16bit word in 65.536
REC 11.2.3	1/8	1	8	11	8	5	Y	5	40						
REC 11.2.3	–														

INEFFICIENCIES:
PB reserved

Sample Schedule Table	Rate	H/K				H&S				KSA 1	DSA 2	SFE 3	SSR 4
		tlm sync hs	inef-fi-cien-cies	word counts	total 16bit word in 65.536	tlm sync hs	inef-fi-cien-cies	word counts	total 16bit word in 65.536	H/K H&S			
REC 11.2.3	1/8,–	1	Y 3	5	40	–	–	–	–			5	
												–	

H/K=1 tlm gather request * 8 major cycles * 5 16–bit data words
inefficiencies: 3 bits per tlm gather

Note	Telemetry Point	Type	Board Address	Telemetry Channel	Data Word	Start MSB	Length Bits	H&S Rate	H/K Rate	SCC Rate
3	SFE B Bus Controller Status	S			0		8	–	1/8	
3	SFE B CH1 KSA Connection	S					8	–	1/8	
3	SFE B CH2 KSA Connection	S			1		8	–	1/8	
3	SFE B CH1 DAS Connection	S					8	–	1/8	
3	SFE B CH2 DAS Connection	S			2		8	–	1/8	
3	SFE B Internal Function Status	S					8	–	1/8	
3	SFE B Science Bus Performance	S			3		8	–	1/8	
3	SFE B High Rate interface Performance	S					8	–	1/8	
3	SFE B High rate interface Status 1	S			4	0	1	–	1/8	
3	SFE B High rate interface Status 2	S				1	1	–	1/8	
3	SFE B High rate interface Status 3	S				2	1	–	1/8	

Note	Telemetry Point	Type	Board Address	Telemetry Channel	Data Word	Start MSB	Length Bits	H&S Rate	H/K Rate	SCC Rate
3	SFE B High rate interface Status 4	S				3	1	–	1/8	
3	SFE B High rate interface Status 5	S				4	1	–	1/8	
3	SFE B High rate interface Status 6	S				5	1	–	1/8	
3	SFE B High rate interface Status 7	S				6	1	–	1/8	
3	SFE B High rate interface Status 8	S				7	1	–	1/8	
3	SFE B Science Bus Status (A–bus/B–bus primary and BC stub)	S				8	1	–	1/8	
3	SFE B KSA Modulator Status (A–side/B–side active)	S				9	1	–	1/8	
3	SFE B DAS Modulator Status (A–side/B–side active)	S				10	1	–	1/8	
3	SFE B Built–in Test Flag (Go/No Go)	S				11	1	–	1/8	
3	SFE B Clock Present Status (On/Off)	S				12	1	–	1/8	
	Reserved					13	3	–	1/8	

Note Column:
1 DN–RES–027 Rev E, 1.2.5.3, Ku–band Single Access (KSA) Modulator Telemetry List
2 DN–RES–027 Rev E, 1.2.5.4, Direct Single Access (DSA) Modulator Telemetry
3 DN–RES–027 Rev E, 1.2.6.4, Science Formatting Equipment (SFE) (TBR)

SFE delta cost with update 1–2 months will impact this telemetry data—as of July 7, 1993 per Joe Sansino

Found differences:
Only one of the two serial interfaces was accounted for.
Also, the temperature and supply voltages were treated as serial but shoul have been analog

Processing Notes:
Tlm synch and first readout of 8 bits can occur in adjacent BDU telemetry control words in the same table.

11.2.4 BDU Sample Schedule Table 11.2.4

Solid State Recorder (SSR) (TBR): The SSR A and SSR B each have a point–to–point I/O serial interface with the Recorder BDU.

Sample Schedule Table	Rate	tlm synchs	SSTABLE		GATHER		H/K			H&S			SCC		
			# in EOS min	16–bit data words	# in EOS min	16–bit data words	inef-fi-cien-cies	word counts	total 16bit word in 65.536	inef-fi-cien-cies	word counts	total 16bit word in 65.536	inef-fi-cien-cies	word counts	total 16bit word in 65.536

REC 11.2.4	1/8	1	8	15	8	7	Y	7	56						
REC 11.2.4	1/64									Y	7	7			

INEFFICIENCIES:
PB reserved

Sample Schedule Table	Rate	H/K				H&S				KSA 1	DSA 2	SFE 3	SSR 4
		tlm sync hs	inef-fi-cien-cies	word counts	total 16bit word in 65.536	tlm sync hs	inef-fi-cien-cies	word counts	total 16bit word in 65.536	H/K H&S			
REC 11.2.4	1/8 1/64	1	Y 1	7	56	1	Y 1/8	7	7	1	1.5		4.5
										1	1.5		4.5

H/K=1 tlm gather request * 8 major cycles * 7 16–bit data words
inefficiencies: 2 bits per tlm gather
H&S=1 tlm gather request * 1 major cycles * 7 16–bit data words
inefficiencies: 2 bits per tlm gather

Note	Telemetry Point	Type	Board Address	Telemetry Channel	Data Word	Start MSB	Length Bits	H&S Rate	H/K Rate	SCC Rate
	DCU–1 Tlm Synch A	–					–	1/64	1/8	
4	DCU–1 Operating Mode	S			0		16	1/64	1/8	
4	DCU–1 Error Correction Activity	S					32	1/64	1/8	
4	DCU–1 BIT BER Result	S					8	1/64	1/8	
4	DCU–1 SFE DCU–DMU Interface Config	S					10	1/64	1/8	
4	DCU–1 Command Error Status	S				2	1	1/64	1/8	
4	DCU–1 BIT Result (GO/NO GO)	S				3	1	1/64	1/8	
4	DCU–1 SFE Record Clock Present	S				4	1	1/64	1/8	
4	DCU–1 SFE Playback Clock Present	S				5	1	1/64	1/8	
4	Reserved	S				6,7	1	1/64	1/8	
1	KSAM–1 EPC 2 Input Current	AA					8	1/64	1/8	
1	KSAM–2 EPC 2 Input Current	AA			1		8	1/64	1/8	
2	DAS–1 Modulator EPC 1 Input Current	AA					8	1/64	1/8	
2	DAS Modulator EPC 2 Input Current	AA			2		8	1/64	1/8	
2	DAS Modulator EPC 2 Input Current	AA					8	1/64	1/8	

Note	Telemetry Point	Type	Board Address	Telemetry Channel	Data Word	Start MSB	Length Bits	H&S Rate	H/K Rate	SCC Rate

Note Column:

1 DN–RES–027 Rev E, 1.2.5.3, Ku–band Single Access (KSA) Modulator Telemetry List

2 DN–RES–027 Rev E, 1.2.5.4, Direct Single Access (DSA) Modulator Telemetry

3 DN–RES–027 Rev E, 1.2.6.4, Science Formatting Equipment (SFE) (TBR)

SFE delta cost with update 1–2 months will impact this telemetry data—as of July 7, 1993 per Joe Sansino

Found differences:
Only one of the two serial interfaces was accounted for.
Also, the temperature and supply voltages were treated as serial but shoul have been analog

4 DN–RES–027 Rev E, 1.2.6.5, and 1.2.6.6., SSR (TBR)

differences:
an update of individual data has been incorporated, it was within the bandwidth allocation of the DN–RES–027 REV E

Processing Notes:
Tlm synch and first readout of 8 bits can occur in adjacent BDU telemetry control words in the same table.
Tlm synch A and Tlm synch B will be used to have the output regixter reflect the two different registers. There is one register for regular H/K telemetry. There is another for the Trickle TlM points—data fields are memory power Map, Buffer Pointer locations, superset utilization Map , superset quality map.

11.2.5 BDU Sample Schedule Table 11.2.5

Solid State Recorder (SSR) (TBR): The SSR A and SSR B each have a point–to–point I/O serial interface with the Recorder BDU.

Sample Schedule Table	Rate	tlm synchs	SSTABLE		GATHER		H/K			H&S			SCC		
			# in EOS min	16–bit data words	# in EOS min	16–bit data words	inefficiencies	word counts	total 16bit word in 65.536	inefficiencies	word counts	total 16bit word in 65.536	inefficiencies	word counts	total 16bit word in 65.536
REC 11.2.5	1/8	1	8	13	8	6	Y	6	48						
REC 11.2.5	1/64									Y	6	6			

INEFFICIENCIES:
PB reserved

Sample Schedule Table	Rate	H/K				H&S				KSA 1	DSA 2	SFE 3	SSR 4
		tlm sync hs	inef-fi-cien-cies	word counts	total 16bit word in 65.536	tlm sync hs	inef-fi-cien-cies	word counts	total 16bit word in 65.536	H/K H&S			
REC 11.2.5	1/8 1/64	1	Y 1	6	48	1	Y 1/16	6	6		.5		5.5
											.5		5.5

H/K=1 tlm gather request * 8 major cycles * 7 16–bit data words
inefficiencies: 1 bits per tlm gather
H&S=1 tlm gather request * 1 major cycles * 7 16–bit data words
inefficiencies: 1 bits per tlm gather

Note	Telemetry Point	Type	Board Address	Telemetry Channel	Data Word	Start MSB	Length Bits	H&S Rate	H/K Rate	SCC Rate
	DCU–2 Tlm Synch A	–					–	1/64	1/8	
4	DCU–2 Operating Mode	S			0	0	16	1/64	1/8	
4	DCU–2 Error Correction Activity	S			1,2		32	1/64	1/8	
4	DCU–2 BIT BER Result	S			3		8	1/64	1/8	
4	DCU–2 SFE DCU–DMU Interface Config	S					10	1/64	1/8	
4	DCU–2 Command Error Status	S				3	1	1/64	1/8	
4	DCU–2 BIT Result (GO/NO GO)	S				4	1	1/64	1/8	
4	DCU–2 SFE Record Clock Present	S				5	1	1/64	1/8	
4	DCU–2 SFE Playback Clock Present	S				6	1	1/64	1/8	
4	Reserved	S				7	1	1/64	1/8	
4	DCU–1 Input line current	AA					8	1/64	1/8	
4	DCU–2 Input line current	AA					8	1/64	1/8	
2	DAS–2 Modulator EPC 1 Input Current	AA					8	1/64	1/8	

Note	Telemetry Point	Type	Board Address	Telemetry Channel	Data Word	Start MSB	Length Bits	H&S Rate	H/K Rate	SCC Rate

Note Column:

1 DN–RES–027 Rev E, 1.2.5.3, Ku–band Single Access (KSA) Modulator Telemetry List

2 DN–RES–027 Rev E,.1.2.5.4, Direct Single Access (DSA) Modulator Telemetry

3 DN–RES–027 Rev E, 1.2.6.4, Science Formatting Equipment (SFE) (TBR)

SFE delta cost with update 1–2 months will impact this telemetry data—as of July 7, 1993 per Joe Sansino

Found differences:
Only one of the two serial interfaces was accounted for.
Also, the temperature and supply voltages were treated as serial but shoul have been analog

4 DN–RES–027 Rev E, 1.2.6.5, and 1.2.6.6., SSR

differences:
an update of individual data has been incorporated, it was within the bandwidth allocation of the DN–RES–027 REV E

Processing Notes:
Tlm synch and first readout of 8 bits can occur in adjacent BDU telemetry control words in the same table.
Tlm synch A and Tlm synch B will be used to have the output regixter reflect the two different registers. There is one register for regular H/K telemetry. There is another for the Trickle TlM points—data fields are memory power Map, Buffer Pointer locations, superset utilization Map , superset quality map.

11.2.6 BDU Sample Schedule Table 11.2.6

Solid State Recorder (SSR) (TBR): The SSR A and SSR B each have a point–to–point I/O serial interface with the Recorder BDU. **Trickle Telemetry (Telemetry Synch B)**

Sample Schedule Table	Rate	tlm synchs	SSTABLE		GATHER		H/K			H&S			SCC		
			# in EOS min	16–bit data words	# in EOS min	16–bit data words	inefficiencies	word counts	total 16bit word in 65.536	inefficiencies	word counts	total 16bit word in 65.536	inefficiencies	word counts	total 16bit word in 65.536
REC 11.2.6	1/8	1	8	13	8	6	Y	6	48						
REC 11.2.6	–														

INEFFICIENCIES:

Sample Schedule Table	Rate	H/K				H&S				KSA 1	DSA 2	SFE 3	SSR 4
		tlm sync hs	inef-fi-cien-cies	word counts	total 16bit word in 65.536	tlm sync hs	inef-fi-cien-cies	word counts	total 16bit word in 65.536	H/K H&S			
REC 11.2.6	1/8 –	1	N	6	48	–	–	–	–			1.5	4.5
												–	–

H/K=1 tlm gather request * 8 major cycles * 5 16–bit data words
inefficiencies: None

Note	Telemetry Point	Type	Board Address	Telemetry Channel	Data Word	Start MSB	Length Bits	H&S Rate	H/K Rate	SCC Rate
	DCU–1 Telemetry Synch B	–					–	–	1/8	
4	DCU–1 ID field identifies 1 of 5 TLM points	S			0	0	3	–	1/8	
4	DCU–1 ID Readout Sequence Identifies data segment	S				3	6	–	1/8	
4	DCU–1 Data Field	S				8	63	–	1/8	
3	SFE A Internal Temperature	SPA				8	8	–	1/8	
3	SFE B Internal Temperature	SPA			5		8	–	1/8	
3	SFE A Internal Power Supply Voltages	SAA					8	–	1/8	

Note Column:

1 DN–RES–027 Rev E, 1.2.5.3, Ku–band Single Access (KSA) Modulator Telemetry List

2 DN–RES–027 Rev E, 1.2.5.4, Direct Single Access (DSA) Modulator Telemetry

3 DN–RES–027 Rev E, 1.2.6.4, Science Formatting Equipment (SFE) (TBR)

SFE delta cost with update 1–2 months will impact this telemetry data—as of July 7, 1993 per Joe Sansino

Found differences:
Only one of the two serial interfaces was accounted for.
Also, the temperature and supply voltages were treated as serial but shoul have been analog

4 DN–RES–027 Rev E, 1.2.6.5, and 1.2.6.6., SSR

differences:
an update of individual data has been incorporated, it was within the bandwidth allocation of the DN–RES–027 REV E

Processing Notes:
Tlm synch and first readout of 8 bits can occur in adjacent BDU telemetry control words in the same table.
Tlm synch A and Tlm synch B will be used to have the output regixter reflect the two different registers. There is one register for regular H/K telemetry. There is another for the Trickle TlM points—data fields are memory power Map, Buffer Pointer locations, superset utilization Map , superset quality map.

11.2.7 BDU Sample Schedule Table 11.2.7

Solid State Recorder (SSR) (TBR): The SSR A and SSR B each have a point–to–point I/O serial interface with the Recorder BDU. **Trickle Telemetry (Telemetry Synch B)**

Sample Schedule Table	Rate	tlm sync hs	SSTABLE		GATHER		H/K			H&S			SCC		
			# in EOS min	16–bit data words	# in EOS min	16–bit data words	inef-fi-cien-cies	word counts	total 16bit word in 65.536	inef-fi-cien-cies	word counts	total 16bit word in 65.536	inef-fi-cien-cies	word counts	total 16bit word in 65.536
REC 11.2.7	1/8	1	8	13	8	6	Y	6	48						
REC 11.2.7	–														
INEFFICIENCIES:															

Sample Schedule Table	Rate	H/K				H&S				KSA 1	DSA 2	SFE 3	SSR 4
		tlm sync hs	inef-fi-cien-cies	word counts	total 16bit word in 65.536	tlm sync hs	inef-fi-cien-cies	word counts	total 16bit word in 65.536	H/K H&S			
REC 11.2.7	1/8 –	1	N	5	40	–	–	–	–			.5	4.5
												–	–
H/K=1 tlm gather request * 8 major cycles * 4 16–bit data words													

Note	Telemetry Point	Type	Board Address	Telemetry Channel	Data Word	Start MSB	Length Bits	H&S Rate	H/K Rate	SCC Rate
	DCU–2 Telemetry Synch B	–					–	–	1/8	
4	DCU–2 ID field identifies 1 of 5 TLM points	S			0		3	–	1/8	
4	DCU–2 ID Readout Sequence Identifies data segment	S					6	–	1/8	
4	DCU–2 Data Field	S			0,3		63	–	1/8	
3	SFE B Internal Power Supply Voltages	~~S~~A A			3		8	–	1/8	

Note	Telemetry Point	Type	Board Address	Telemetry Channel	Data Word	Start MSB	Length Bits	H&S Rate	H/K Rate	SCC Rate

Note Column:

1 DN–RES–027 Rev E, 1.2.5.3, Ku–band Single Access (KSA) Modulator Telemetry List

2 DN–RES–027 Rev E, 1.2.5.4, Direct Single Access (DSA) Modulator Telemetry

3 DN–RES–027 Rev E, 1.2.6.4, Science Formatting Equipment (SFE) (TBR)

SFE delta cost with update 1–2 months will impact this telemetry data—as of July 7, 1993 per Joe Sansino

Found differences:
Only one of the two serial interfaces was accounted for.
Also, the temperature and supply voltages were treated as serial but shoul have been analog

4 DN–RES–027 Rev E, 1.2.6.5, and 1.2.6.6., SSR

differences:
an update of individual data has been incorporated, it was within the bandwidth allocation of the DN–RES–027 REV E

Processing Notes:
Tlm synch and first readout of 8 bits can occur in adjacent BDU telemetry control words in the same table.
Tlm synch A and Tlm synch B will be used to have the output regixter reflect the two different registers. There is one register for regular H/K telemetry. There is another for the Trickle TlM points—data fields are memory power Map, Buffer Pointer locations, superset utilization Map , superset quality map.

11.2.8 BDU Sample Schedule Table 11.2.8

Sample Schedule Table	Rate	tlm sync hs	SSTABLE		GATHER		H/K			H&S			SCC		
			# in EOS min	16–bit data words	# in EOS min	16–bit data words	inef-fi-cien-cies	word counts	total 16bit word in 65.536	inef-fi-cien-cies	word counts	total 16bit word in 65.536	inef-fi-cien-cies	word counts	total 16bit word in 65.536
REC 11.2.7	1/64	1	1	8	1	4	N	1	8						
REC 11.2.7	1/64									N	1	8			

INEFFICIENCIES:

Sample Schedule Table	Rate	H/K				H&S				KSA 1	DAS 2	SFE 3	SSR 4
		tlm sync hs	inef-fi-cien-cies	word counts	total 16bit word in 65.536	tlm sync hs	inef-fi-cien-cies	word counts	total 16bit word in 65.536	H/K H&S			

REC 11.2.8	1/64 1/64	0	N	4	4	0	N	4	4	1	1		2
										1	1		2

H/K=1 tlm gather request * 8 major cycles * 4 16–bit data words
H&S=1 tlm gather request * 1 major cycles * 4 16–bit data words

Note	Telemetry Point	Type	Board Address	Telemetry Channel	Data Word	Start MSB	Length Bits	H&S Rate	H/K Rate	SCC Rate
1	KSAM–1 Oscillator Temp	PA			0		8	1/64	1/64	
1	KSAM–2 Oscillator Temp	PA					8	1/64	1/64	
2	DAS–1 Modulator Oscillator Temperature	PA			1		8	1/64	1/64	
2	DAS–2 Modulator Oscillator Temperature	PA					8	1/64	1/64	
4	DCU–1 Temperature 1	PA			2		8	1/64	1/64	
4	DCU–1 Temperature 2	PA					8	1/64	1/64	
4	DCU–2 Temperature 1	PA			3		8	1/64	1/64	
4	DCU–2 Temperature 2	PA					8	1/64	1/64	

Note Column:

1 DN–RES–027 Rev E, 1.2.5.3, Ku–band Single Access (KSA) Modulator Telemetry List

2 DN–RES–027 Rev E, 1.2.5.4, Direct Single Access (DSA) Modulator Telemetry

3 DN–RES–027 Rev E, 1.2.6.4, Science Formatting Equipment (SFE) (TBR)

SFE delta cost with update 1–2 months will impact this telemetry data—as of July 7, 1993 per Joe Sansino

Found differences:
Only one of the two serial interfaces was accounted for.
Also, the temperature and supply voltages were treated as serial but shoul have been analog

4 DN–RES–027 Rev E, 1.2.6.5, and 1.2.6.6., SSR

differences:
an update of individual data has been incorporated, it was within the bandwidth allocation of the DN–RES–027 REV E

MARTIN MARIETTA CORPORATION
ASTRO SPACE

EOS–DN–SE&I–025, Rev. D

DESIGN NOTE

TITLE: EOS–AM Spacecraft Program Acronym List (PAL)

AUTHOR: S. Waldner

AUTHOR'S MANAGER: D. Fischer DATE August 26, 1993

SE&I MANAGER: S. Carey DATE 8/26/93

CHIEF ENGINEER: D. Longcoy DATE 8/26/93

REVISIONS

LETTER	DESCRIPTION	DATE	AUTHOR
–	Initial release	01/23/92	S. Waldner
A	Spacecraft Bus PDR Update	05/15/92	S. Waldner
B	GSE Software PDR Update	10/26/92	S. Waldner
C	FSTB RR/PMO Update	01/13/93	S. Waldner
D	Spacecraft PDR Update	08/26/93	S. Waldner

MARTIN MARIETTA CORPORATION
ASTRO SPACE

DESIGN NOTE SUMMARY

DN#: EOS–DN–SE&I–025 **Revision:** D **Date:** 08/26/93

Title: EOS–AM Spacecraft Program Acronym List (PAL)

Author: S. Waldner **Source ID (ESTA, PD, Memo, etc.):**

Purpose/Questions Answered:

Updated for EOS–AM Spacecraft PDR.

Summary/Answers:

Recommendations: (Be Specific)	Accepted	Rejected	Baselined	Date

Open Items/Action Required	Responsible Person	Due Date
Update Program Acronym List for Spacecraft CDR	S. Waldner/D. Benko	8/94

Comments

Form Completed By S. Waldner **Date** 08/26/93 **Page** 1 **of** 1

EOS Form 007–2/91

EOS–AM Spacecraft Acronym List

3D	Three–Dimensional
A/C	Air Conditioning
A/D	Analog to Digital
A/R	As Required
ACE	Attitude Control Electronics
ACS	Attitude Control System
ACS	Ammonia Charge Station
ADAC	Attitude Determination and Control
ADE	Array Drive Electronics
ADP	Automatic Data Processing
ADPE	Automatic Data Processing Equipment
ADR	Automated Discrepancy Report
ADRS	Automated Discrepancy Reporting System
ADS	Ancillary Data Support
ADS	Attitude Determination System
AFM	Award Fee Milestone
AGE	Aerospace Ground Equipment
AI	Artificial Intelligence
aka	also known as
AM	Amplitude Modulation
AM	Ante Meridiem (before noon)
ANSI	American National Standards Institute
AOS	Acquisition of Signal
APS	Auxiliary Power Supply
AR	Acceptance Review
ARM	Ada Reference Manual

ARO	After Receipt of Order
ASB	Ada Source Builder
ASCII	American Standard for Code Interface Interchange
ASD	Accelerational Spectral Density
ASG	Ada Structure Graph
ASOC	Actual State of Change
ASSIST	Aerospace Support for Systems, Integration, Software, and Test
ASSY	Assembly
ASTER	Advanced Spaceborne Thermal Emission and Reflection Radiometer
ASTER–CSP	ASTER Common Signal Processor
ASTER–MPS	ASTER Master Power Supply
ASTER–SWIR	ASTER Short Wave Infrared Radiometer
ASTER–TIR	ASTER Thermal Infrared Radiometer
ASTER–VEL	ASTER VNIR Electronics
ASTER–VNIR	ASTER Visible and Near Infrared Radiometer
ASTER–VSR	ASTER VNIR Scanning Radiometer
ASTM	American Society for Testing and Materials
ATC	Absolute Time Command
ATC	Alignment Tool Cube
ATG	Aerospace Test Group
ATP	Acceptance Test Procedure
ATP	Automated Test Procedure
AWG	American Wire Gauge
B/L	Baseline
BAC	Budget at Completion
BAT	Bench Acceptance Test
BBL	Burst Before Leak

BC	Bus Controller
BCVM	Battery Cell Voltage Monitor
BDD	Baseline Description Document
BDU	Bus Data Unit
BER	Bit Error Rate
BM	Body Mounted
BOE	Basis of Estimate
BOL	Beginning of Life
BOM	Beginning of Mission
BPC	Battery Power Conditioner
BPM	Battery Pressure Monitor
bps	Bits Per Second
BPSK	Binary Phase Shift Keying
BRF	Band Reject Filter
BRKT	Bracket
BSR	Bit Slippage Rate
BTU	British Thermal Unit
C	Celsius (temperature)
C&DH	Command and Data Handling
C&DHS	Command and Data Handling Subsystem
C&T	Command and Telemetry
C&TB	Command and Telemetry Bus
C–Spec	Control Specification
C/D	Charge/Discharge
C/SCSC	Cost/Schedule Control System Criteria
CAD	Computer–Aided Design/Drafting
CAD/CAM	Computer–Aided Design/Computer–Aided Manufacturing

CADU	Channel Access Data Unit
CAM	Computer–Aided Manufacturing
CAM	Cost Account Manager
CAPL	Capillary–Assist Pumped Loop (GSFC Flight Experiment)
CASE	Computer–Aided Software Engineering
CB	Control Board
CCB	Configuration Control Board
CCD	Charged Coupled Device
CCHP	Constant Conductance Heat Pipe
CCI	Common Carrier Interface
CCOD	Contract Change Order Date
CCP	Contamination Control Plan
CCSDS	Consultive Committee for Space Data Systems
CCW	Counter Clockwise
CD	Contract Directive
CDD	Component Description Document
CDHF	Central Data Handling Facility
CDOS	Customer Data and Operations System
CDR	Critical Design Review
CDRL	Contract Data Requirements List
CE	Conducted Emissions
CEI	Contract End Item (Specification)
CERES	Clouds and the Earth's Radiant Energy System
CERT	Composite Electrical Readiness Test
CFD	Control Flow Diagram
CFM	Cubic Feet Per Minute
CFS	Conflict Free Schedule

CG	Center–of–Gravity
CI	Configuration Item
CI	Console Input
CIL	Critical Items List
CLCW	Command Link Control Word
CLTU	Command Link Transfer Unit
CM	Configuration Management
cm	Centimeter
CMD	Command
CMD/TLM	Command/Telemetry
CMF	Configuration Management Facility
CMOS	Complementary Metal–Oxide Semiconductor
CMS	Command Management System
CO	Console Output
COB	Close of Business
COMM	Communications
COMMS	Communications Subsystem
COP	Command Operations Procedure
CP	Cold Plate
CP	Control Panel
CPHTS	Capillary–Pumped Heat Transport System
CPI	Cost Performance Index
CPR	Cost Performance Report
CPT	Comprehensive Performance Test
CPU	Central Processing Unit
CR	Change Request
CRC	Cyclic Redundancy Code

CRR	Charge Rate Reset
CRT	Cathode Ray Tube
CS	Conducted Susceptibility
CSC	Computer Software Component
CSCI	Computer Software Configuration Item
CSD	Contract Start Date
CSP	Common Signal Processor (ASTER)
CSS	Coarse Sun Sensor
CSTOL	Colorado (University of) Standard Test and Operations Language
CSU	Computer Software Unit
CT&C	Command, Telemetry, and Control
CTCA	Command and Telemetry Computer Assembly
CTE	Coefficient of Thermal Expansion
CTIU	Command and Telemetry Interface Unit
CTP	Comprehensive Test Plan
CTS	Compatibility Test Section
CTV	Compatibility Test Van
CV	Check Valve
CVCDU	Coded Virtual Channel Data Unit
CVCM	Collected Volatile Condensible Mass (or Material)
CW	Clockwise
CY	Calendar Year
D/A	Digital to Analog
DAAC	Distributed Active Archive Center
DAC	Digital–to–Analog Converter
DACS	Data Acquisition and Control System
DADS	Data Archive and Distribution System

DAR	Data Acquisition Request
DAS	Direct Access System
dB	Decibel
DB	Database
DB	Direct Broadcast (DAS Service)
DBMS	Database Management System
dc	Direct Current
DCC	Data Coordination Center
DCR	Design Certification Review
DCU	Data Control Unit (Solid–State Recorder)
DDL	Direct Downlink
DEC	Digital Equipment Corporation
deg	Degree
DEL	Data Evaluation Laboratory
DET	Direct Energy Transfer
DEU	Deployment Electronics Unit (Solar Array Assembly)
DFD	Data Flow Diagram
DG	Data Grade
DG1	Data Group 1 (TDRSS)
DG2	Data Group 2 (TDRSS)
DHC	Data Handling Center
DID	Data Item Description
DIF	Data Interface Facility
DIS	Data Interface System
DIU	Data Interface Unit
DMSP	Defense Meteorological Satellite Program
DMU	Data Memory Unit (Solid–State Recorder)

DN	Design Note
DOD	Depth–of–Discharge
DoD	Department of Defense
DoDI	Department of Defense Instruction
DOE	Department of Energy
DOF	Degree of Freedom
DOS	Disk Operational System
DOY	Day of Year
DP	Direct Playback (DAS Service)
DPA	Destructive Physical Analysis
DPM	Deputy Program Manager
DPR	Data Pedigree Review
DR	Documentation Requirement
DRC	Document Retention Center
DRD	Data Requirements Document
DRL	Data Requirement List
DRWS	Defect Resolution Worksheet
DSE	Design Sensitive Editor
DSN	Deep Space Network
DT	Data Transfer
DT	Decision Table
DTC	Drill Template Cube
DTR	Daily Test Report
E–mail	Electronic Mail
EAC	Estimate at Completion
EAGE	Electrical Aerospace Ground Equipment
EAS	Electrical Accommodation Subsystem

ECA	Environmentally Controlled Area
ECEF	Earth Centered Earth Fixed
ECI	Earth Centered Inertia
ECL	Emitter–Coupled Logic
ECN	Engineering Change Notice
ECOM	EOS Communication System
ECP	Engineering Change Proposal
ECR	Engineering Change Request
ECS	EOS Core System
EDAC	Error Detection and Correction
EDB	Engineering Database
EDC	EOS Document Center (Martin Marietta Astro Space)
EDCN	EOS Document Center (Log) No.
EDM	Engineering Development Model
EDOCS	EOS Data, Operations and Communications System
EDOS	EOS Data and Operations System
EED	Electro–explosive Device
EEE	Electrical, Electronic, and Electromechanical
EES	Electro–explosive Subsystem
EGSE	Electrical Ground Support Equipment
EICD	Electrical Interface Control Drawing
EIRP	Effective Isotropically Radiated Power
ELV	Expendable Launch Vehicle
EM	Equipment Module
EM STE	Equipment Module Special Test Equipment
EMC	Electromagnetic Compatibility
EMI	Electromagnetic Interference

EMISM	Electromagnetic Interference Safety Margin
EMS	Engineering Master Schedule
ENA	Energetic Neutral Atom
ENG	Engineering
EOC	EOS Operations Center
EOL	End–of–Life
EOM	End of Mission
EOS	Earth Observing System
EOS–AM	Earth Observing System (AM Mission)
EOS–PM	Earth Observing System (PM Mission)
EOSC	EOS–AM CDRL (Log No.)
EOSDIS	EOS Data Information System
EOSMIS	EOS Management Information System
EPC	Electronic Power Conditioner
EPI	Engineering Process Improvement
EPM	Engineering Program Manager
EPS	Electrical Power Subsystem
ERNP	Earth Rotation – Nutation – Precession
ES	Equipment Section
ESA	Earth Sensor Assembly
ESC	Engineering Support Center
ESD	Electro–Static Discharge
ESE	Earth Sensor Electronics
ESH	Earth Sensor Head
ESMC	Eastern Space Missile Center
ESMC/WSMC	Joint Eastern/Western Space and Missile Center
ESN	EOS Science Network

ESTOL	EOS Standard Test and Operations Language
ETE	End–To–End
ETM	Engineering Test Model
ETR	Eastern Test Range
ETSS	Expansion Tube Separation System
EUT	Equipment Under Test
EUV	Extreme Ultraviolet
F	Fahrenheit (temperature)
F/D	Fluid Disconnect
F/L	Forward Link
F/W	Firmware (also FW)
FAR	Federal Acquisition Regulation
FAR	Flow Alteration Record
FARM	Frame Acceptance and Reporting Mechanism
FAT	Factory Acceptance Test
FBA	Fuse Board Assembly
FCA	Functional Configuration Audit
FCC	Flat Conductor Cable
FDB	Fuse Distribution Box
FDD	Flight Dynamics Division (GSFC)
FDF	Flight Dynamics Facility
FDIR	Fault Detection, Isolation, and Recovery
FDM	Frequency Division Multiplexing
FDV	Fill & Drain Valve
FEC	Forward Error Correction
FED–STD	Federal Standard
FEM	Finite Element Model

FF	Fast Forward
FMEA	Failure Modes & Effects Analysis
FMECA	Failure Modes, Effects, & Criticality Analysis
FMH	Free Molecular Heating
FO	Flight Operations
FOB	Free on Board
FOC	Full Operational Capability
FORTRAN	Formula Translation (A programming language)
FOS	Flight Operations Segment
FOT	Flight Operations Team
FOV	Field of View
fpm	Feet per minute
FRB	Failure Review Board
FRR	Flight Readiness Review
FS	Factor of Safety
FSE	Flight Support Equipment
FSS	Fine Sun Sensor
FST	Field Support Terminal
FSTB	Flight Software Testbed
FSW	Flight Software
FSWS	Flight Software System
ft	Feet
ft–c	Foot Candle
FTS	Flight Termination System
FVS	Flight Vehicle System
FW	Firmware (also F/W)
FWD	Forward

FY	Fiscal Year
g	Acceleration of Gravity
g	Gram
GaAs	Galium Arsenide
GDE	Gimbal Drive Electronics
GE	General Electric Company
GEVS–SE	General Environmental Verification Specification for STS and ELV Payloads
GFE	Government Furnished Equipment
GFP	Government Furnished Property
GFY	Government Fiscal Year
GHz	Gigahertz
GIA	Government Inspection Agency
GIIS	General Instrument Interface Specification
GIS	General Interface Specification
GMT	Greewich Mean Time
GN	Ground Network
GN&C	Guidance, Navigation, and Control
GN&CS	Guidance, Navigation, and Control Subsystem
GPS	Global Positioning System
Gr/Ep	Graphite Epoxy
grms	Gravity Root Mean Square
GRO	Gamma Ray Observatory
GS	Ground System
GSE	Ground Support Equipment
GSERD	Ground Support Equipment Requirements Document
GSFC	Goddard Space Flight Center (NASA)
GSI	Government Source Inspection

GSIWS	Ground System Integration Working Group
GSTDN	Ground Space Flight Tracking and Data Network
GSW	Ground Software
GUI	Graphical User Interface
H&S	Health and Safety
H/C	Honeycomb
H/K	Housekeeping
H/R I/F	High Rate Interface
H/W	Hardware (also HW)
HCE	Heater Control Electronics
HDE	Hinge Deployment Electronics
HDR	Header
HF	High Frequency
HGA	High Gain Antenna
HOL	High Order Language
HP	Heat Pipe
HQ	Headquarters (NASA)
hr	Hour
HR	High Rate
HRBS	High Rate Bit Synchronizer
HRDL	High Rate Data Link
HRM	High Rate Modulator
HRS	High Rate Science
HTS	Horizontal Test Stand
HVAC	Heating, Ventilation, and Air Conditioning
HW	Hardware (also H/W)
HWCI	Hardware Configuration Item

HX	Heat Exchanger
Hz	Hertz
I&C	Installation and Checkout
I&T	Integration and Test
I/F	Interface
I/O	Input/Output
IAC	Instrument Alignment Cube
IAP	Instrument Assembly Port
IAS	Instrument Accommodation Structure
IBDU	Instrument Bus Data Unit
IC	Interface Connector
ICC	Instrument Control Center
ICD	Interface Control Document / Drawing
ICF	Instrument Control Facility
ID	Identifier
ID	Inside Diameter
IEEE	Institute of Electrical and Electronics Engineers
IFOU	Instrument Flight Operation Understanding (Ops document)
IFOV	Instantaneous Field of View
IGC	Incoming GSFC Correspondence
IGSE	Instrument Ground Support Equipment
IIC	Instrument Interface Cube
IIS	Integrated Information System
IM	Instrument Module
IMP	Instrument Mounting Plate
IMS	Information Management System
IMU	Inertial Measurement Unit

in	inch
INSP	Inspection
INST	Instrument
INTL	International
IP	Instrument Provider
IPA	Iso–Propyl Alcohol
IR	Infrared
IRC	Inertial Reference Cube
IRD	Interface Requirements Document
IRU	Inertial Reference Unit
ISAR	Instrument Support Activity Request
ISDS	Inadvertent Separation Destruct System
ISP	Specific Impulse
ISS	Instrument Secondary Structure
IST	Instrument Support Terminal
ITD	Inception To Date
ITO	Indium Tin Oxide
ITS	Integration Test Stand
IU	Interface Unit
IV&V	Independent Verification and Validation
IVT	Interface Verification Test
IWG	Investigator Working Group
J	Joules
JCL	Job Control Language
JICC	Japan Instrument Control Center
JPL	Jet Propulsion Laboratory
JSC	Johnson Space Center (NASA)

K/M	Kinematic Mount (also KM)
kb	kilobit
Kbps	Kilobits per Second
kg	Kilogram
kHz	Kilohertz
km	kilometer
KM	Kinematic Mount
kPa	Kilopascal
KSA	Ku–band Single Access
KSC	Kennedy Space Center (NASA)
KSLOC	Thousand Source Lines of Code
Ku	RF band (Giga hertz range)
kW	Kilowatt
LAN	Local Area Network
LaRC	Langley Research Center (NASA)
LASP	Laboratory for Atmospheric and Space Physics (University of Colorado)
lb	Pound (Mass)
LBB	Leak – Before – Burst
lbf	Pounds of Force
LC	Launch Complex
LCC	Launch Control Center
LEO	Low Earth Orbit
LeRC	Lewis Research Center (NASA)
LET	Linear Energy Transfer
LHC	Left–hand Circular
LLCSC	Lower Level Computer Software Component
LOB	Launch Operations Building

LOC	Lines of Code
LOCC	Launch Operations Control Center
LOE	Level of Effort
LOS	Line of Sight
LOS	Loss of Signal
LRE	Latest Revised Estimate
LRM	Language Reference Manual
LRR	Launch Readiness Review
LRS	Low Rate Science
LSB	Launch Services Building
LSB	Least Significant Bit
LSE	Launch Support Equipment
LSSP	Launch Site Support Plan
LTIP	Long Term Instrument Plan
LTMP	Long Term Mission Plan
LTOP	Long Term Operations Plan
LTP	Long Term Plan
LTSP	Long Term Science Plan
LV	Launch Vehicle (also L/V)
LVC	Launch Vehicle Contractor
LVIC	Launch Vehicle Interface Contractor
LVS	Launch Vehicle System
LVTP	Launch Vehicle Technical Plan
m	Meter
M&SD	Micrometeoroid & Space Debris
M&SS	Mission & Simulation Software
M/B	Make/Buy

M2	Mode 2
mA	Milli–Amperes
MA	Multiple Access
MACS	Modular Attitude Control Subsystem (MMS)
MAG	Magnetometer
MAGE	Mechanical Aerospace Ground Equipment
Mb	Megabit
MB	Megabyte (also Mbyte)
Mbps	Megabits per second
MDP	Maximum Design Pressure
MeV	Mega–Electron Volt
METS	Mobile Environmental Test System
mF	Milli–Farad
Mfg	Manufacturing
mg	Milligram
MGSE	Mechanical Ground Support Equipment
mh	Micro–Henry
MHz	Mega Hertz
mi	Mile
MICD	Mechanical Interface Control Drawing
MIL–STD	Military Standard
min	Minute
MIPS	Million Instructions per Second
MISR	Multi–angle Imaging Spectro–Radiometer
MLI	Multi–Layer Insulation
mm	Millimeter
MMI	Man Machine Interface

MMSLS	Martin Marietta Space Launch Systems
MO	Master Oscillator
MO&DSD	Mission Operations and Data Systems Directorate (GSFC Code 500)
MOC	Mission Operations Center
MOD	Modulator
MODIS	Moderate Resolution Imaging Spectrometer
MOM	Mission Operations Manager
MOPITT	Measurements of Pollution in the Troposphere
MOR	Mission Operations Review
MOSFET	MOS Field Effect Transistor
MOU	Memorandum of Understanding
MPDU	Multiplexed Protocol Data Unit
MPF	Multi–Purpose Fixture
MPS	Master Power Supply (ASTER)
MR	Management Reserve
MRB	Material Review Board
MRC	Master Reference Cube
MRR	Manufacturing Readiness Review
MS	Margin of Safety
MSB	Most Significant Bit
msec	Milli–second
MSFC	Marshall Space Flight Center (NASA)
MST	Mobile Service Tower
MTBF	Mean Time Between Failure
MTBI	Mean Time Between Interrupts
MTBM	Mean Time Between Malfunction
MTM	Mechanical Test Model

MTR	Magnetic Torque Rod
MTTR	Mean Time to Repair
MTU	Master Timing Unit
MUA	Materials Usage Agreement
MUH	Mission Unique Hardware
MUX	Multiplexer
N	Newton
N/A	Not Applicable (also NA)
NASA	National Aeronautics and Space Administration
NASA/GSFC	NASA/Goddard Space Flight Center
NASCOM	NASA Communications Network
NASTRAN	NASA Structural Analysis (computer program)
NAV	Navigation
NB	Narrowband
NB	Navigation Base
NBC	Navigation Base Cube
NBP	Navigation Base Plate
NBR	Navigation Base Reference
NBRC	Navigation Base Reference Cube
NBS	National Bureau of Standards
NC	Normally Closed
NCAR	National Center for Atmospheric Research
NCC	Network Control Center
NCG	Noncondensible Gas
NDE	Nondestructive Evaluation
NDT	Non–Destructive Testing
NHB	NASA Handbook

NiH2	Nickel Hydrogen (Battery)
nm	Nautical Mile
NMI	NASA Management Instruction
Nms	Newton Meter Seconds
NOAA	National Oceanic and Atmospheric Administration
NP	Navigation Port
NSI	NASA Standard Initiators
NSMAR	Non–Standard Material Approval Request
NSPAR	Non–Standard Part Approval Request
NSPL	NASA Standard Part List
NSTR	NASA Standard Tape Recorder
NSTS	National Space Transportation System (the Space Shuttle)
NTE	Not to Exceed
NTS	NASA Telemetry Station
NUS	No Upper Stage
NVR	Non–Volatile Residue
NWS	National Weather Service
O&C	Operations & Checkout
O&M	Operations and Management
OASIS	Operations and Science Instrument Support Software
OBC	On–Board Computer
OCD	Operational Concept Document
OD	Outside Diameter
OGC	Outgoing GSFC Correspondence
OHA	Operations Hazard Analysis
OPD	Operations Document
OPS	Operations

ORG	Organization
ORR	Operations Readiness Review
OS	Operating System
OSR	Optical Solar Reflector
OTC	Official Test Copy
OVS	Operational Voice System
p–p	Peak–to–Peak
P/B	Playback
P/L	Payload
P/S	Planning and Scheduling
P/V	Photovoltaic
PA	Product Assurance
PAS	Platform Analysis System
PAI	Product Assurance Instruction
PAIP	Product Assurance Implementation Plan
PAL	Program Acronym List
PAM	Product Assurance Manager
PAMPL	Program Approved Materials and Processes List
PAPE	Produce Assurance Program Engineer
PAPL	Program Approved Parts List
PAPs	Product Assurance Procedures
PAR	Product Assurance Requirements Document
PAT	Process Activation Table
PB	Playback
PC	Printed Circuit
PC	Personal Computer
PCA	Physical Configuration Audit

PCA	Precision Cleaning Agent
PCC	Potential Contract Change
PCI	Periodic Convolutional Interleaver
PCM	Pulse Code Modulation
PCSM	Power Control and Status Monitor
PD	Program Directive
PDA	Percent of Defectives Allowable
PDF	Programmable Data Formatter
PDL	Program Design Language
PDLC	Preliminary Design Load Cycle
PDR	Preliminary Design Review
PDU	Power Distribution Unit
PER	Pre–Environmental Review
PF	Protoflight
PH	Power Harness
PHS&T	Packing, Handling, Storage, and Transportation
PHSF	Payload Hazardous Servicing Facility
PI	Principal Investigator
PI	Programmed Input
PI/TL	Principle Investigator/Team Leader
PIR	Program Information Release
PIU	Power Interface Unit
PKT	Packet
PLF	Payload Fairing
PM	Phase Modulated (RF)
PM	Program Manager
PM	Propulsion Module

PMA	Program Management Assessment
PMAD	Power Management and Distribution
PMCS	Power Management and Control Software
PMEA	Propulsion Module Electronics Assembly
PMEGSE	Propulsion Module Electrical Ground Support Equipment
PMO	Program Management Office
PMR	Program Management Review
PMS	Performance Measurement System
PMSR	Performance Measurement System Report
PN	Pseudorandom Noise (Comm)
PO	Programmed Output
POCC	Payload Operations Control Center
POD	Precision Orbit Determination
PPM	Parts–Per–Million
PPR	Payload Preparation Room
PPR	Primary Power Reference
pps	Pulses per second
PPS&C	Programming Practices, Standards, and Conventions
PR	Problem Report
PRA	Pyrotechnic Relay Assembly
PREG	Pressure Regulator
PROM	Programmable ROM
PROP	Propulsion
PROPS	Propulsion Subsystem
PS	Power Supply
Ps	Probability of Success
PSCN	Program Support Communication Network

psia	Pounds per Square Inch, Absolute
PSK	Phase Shift Key
PSR	Preshipment Review
PSR	Program Status Review
PSS	Portable Simulation System
PSU	Power Switching Unit
PT	Propellant Tank
PTE	Prior to Encapsulation
PTTS	Platform Test and Training System
PV	Pyro Valve
PWM	Pulse–Width–Modulation
PWR	Power
PXD	Pressure Transducer
QA	Quality Assurance
QAE	Quality Assurance Engineer
QC	Quality Control
QPSK	Quadrature Phase Shift Key
QS	Quasi–static
QTM	Qualification Test Model
R&D	Research and Development
R&I	Receiving and Inspection
R/L	Return Link
R/T	Real–Time (also RT)
RAGCS	Radiator Ground Cooling System
RAM	Random Access Memory
RAM	Responsibility Assignment Matrix
RCS	Reaction Control System

RCV	Receive
RD	Requirements Document
RDBMS	Relational Database Management System
RDD	Requirements Driven Developer (requirements traceability software tool)
RE	Radiated Emissions
REA	Rocket Engine Assembly
REM	Recorder Equipment Module
revs	Revolutions
RF	Radio Frequency
RFI	Radio Frequency Interference
RFP	Request for Proposal
RFQ	Request for Quote
RFSOC	RF Simulation Operations Center
RH	Relative Humidity
RHC	Right–hand Circular
RLCC	Remote Launch Control Center
RMS	Root Mean Square
ROM	Read Only Memory
ROM	Rough Order of Magnitude (Quote)
RR	Requirements Review
RS	Radiated Susceptibility
RS	Resistor, series
RSS	Root Sum Square
RT	Remote Terminal
RTC	Relative Time Command
RTCS	Relative Time Command Sequence
RTL	Run–Time Library

RTM	Requirements Traceability Matrix
RTN	Return
RTN	Requirements Traceability Number
RTS	Relative Time Sequence
RTS	Run Time System
RTSE	Run Time System Environment
RTSS	Real–Time System Simulator
RWA	Reaction Wheel Assembly
S&R	Search and Rescue
S/C	Spacecraft (also SC)
S/C	Subcontract
S/L	Static Load
S/No	Signal–To–Noise Ratio
S/S	Subsystem
S/W	Software (also SW)
SA	Solar Array (also S/A)
SA	Single Access
SA	Structured Analysis
SAA	Solar Array Assembly
SAAS	Spacecraft Analysis and Archive Software
SAD	Solar Array Drive
SAES	Solar Array Electrical Simulator
SAMTEC	Space and Missile Test Center
SAP	System Alignment Plate
SAPS	Solar Array Position Sensor
SAR	Software Assurance Requirements
SAR	Schedule Add Request

SAS	Spacecraft Analysis Software
SBIU	S–band Interface Unit
SBT	S–band Transponder
SC	Structure Chart
SCA	Spacecraft Adapter
SCAPE	Self Contained Atmosphere Protection Ensemble
SCC	Spacecraft Controls Computer
SCE	Spacecraft Command Encoder
SCM	Software Configuration Management
SCR	System Concept Review
SCS	Spacecraft Checkout Station
SCT	Stored Command Table
SD	Space Division
SD	Structured Design
SDF	Software Development Facility
SDF/SIM	Software Development Facility/Simulator
SDP	Software Development Plan
SDR	System Design Review
SDS	Spacecraft Dynamic Simulator
SE	Support Equipment
SE&I	Systems Engineering and Integration
SEAMIS	Software Environment And Management Information System
sec	Second
SECN	System Engineering Change Notice
SECO	Stage II Engine Cutoff
SEL	Single Event Latchup
SEM	State/Event Matrix

SEMP	Systems Engineering Management Plan
SEN	Sensor
SERD	Support Equipment Requirements Document
SEU	Single Event Upset
SFE	Science Formatting Equipment
SHDP	Safe Hold Digital Processor
SI	Systeme International dUnites (International System of Units)
SI	System Integrator
SIG	Signal
SIRD	Support Instrumentation Requirements Document
SIS	Spacecraft Interface Simulator
SLC	Space Launch Complex
SLC–3	Space Launch Complex – 3 (Vandenburg Air Force Base)
SLOC	Source Lines of Code
SMA	S–band Multiple Access (TDRSS)
SMAP	Software Management and Assurance Program
SMC	System Management Center
SMM	Shape Memory Metal
SMP	Software Management Plan
SMS	Structure and Mechanisms Subsystem
SN	Space Network
SNC	Space Network Control
SOA	S–band Omni Antenna
SOC	Simulation Operations Center
SOP	Standard Operating Procedure
SOW	Statement of Work
SPA	S–band Power Amplifier

SPA	Software Product Assurance
SPF	Software Production Facility
SPI	Schedule Performance Index
SPR	Software Problem Report
SQA	Software Quality Assurance
SQE	Software Quality Engineer
SQL	Structured Query Language
SQPN	Staggered Quadraphase Pseudo–noise
SQPSK	Staggered Quadraphase Shift Keying
SRA	Spacecraft Reference Axis
SRA	Slip Ring Assembly
SRM	Solid Rocket Motor
SRM&QA	Safety, Reliability, Maintainability, and Quality Assurance
SRMU	Solid Rocket Motor Upgrade
SRP	Signal Reference Plane
SRR	System Requirements Review
SRS	Software Requirements Specification
SRT	System Readiness Test
SSA	S–band Single Access (TDRSS)
SSA	Sun Sensor Assembly
SSA	Source Selection Authority
SSB	Solid–State Buffer
SSB	Source Selection Board
SSD	Space Systems Division
SSE	Sun Sensor Electronics
SSIM	Spacecraft Simulator
SSIP	System Safety Implementation Plan

SSPA	Solid–State Power Amplifier
SSR	Solid–State Recorder
SSST	Solid–State Star Tracker
SSU	Sequential Shunt Unit
ST	Star Tracker
STD	Standard
STD	State Transition Diagram
STDN	Spaceflight Tracking and Data Network
STE	Special Test Equipment
STGT	Second TDRSS Ground Terminal
STIP	Short Term Instrument Plan
STOL	Standard Test and Operations Language
STOP	Short Term Operations Plan
STP	Short Term Plan
STP	Software Test Plan
STR	System Test Review
STS	Short Term Storage
STS	Space Transportation System (the Space Shuttle)
SV	Space Vehicle
SVC	Satellite Vehicle Contractor
SW	Software (also S/W)
SWAR	Software Acceptance Review
SWCDR	Software Critical Design Review
SWCI	Software Customer Inspection
SWCR	Software Concept Review
SWIR	Short Wavelength Infrared Radiometer (ASTER)
SWPDR	Software Preliminary Design Review

SWRR	Software Requirements Review
SWTRR	Software Test Readiness Review
SYS	System
T–0	T–Minus–Zero
T/B	Thermal/Balance
T/V	Thermal Vacuum
TA	Task Assignment
TA	Thruster Assembly
TABS	Thermally–activated By–pass Switch
TAM	Three–Axis Magnetometer
TAP	Three–Axis Positioner
Tb	Terabyte
TBD	To Be Determined
TBR	To Be Reviewed
TBS	To Be Supplied
TC	Thermocouple
TCPS	Test Cold Plate System
TCS	Thermal Control Subsystem
TD	Technical Directive
TD	Test Directive
TDM	Time–Division Multiplexing
TDM	Technology Demonstration Model (Thermal)
TDRS	Tracking and Data Relay Satellite
TDRSS	Tracking and Data Relay Satellite System
TF	Transfer Frame
TFEC	Transfer Frame Error Control
TIM	Technical Interchange Meeting

TIR	Thermal Infrared Radiometer (ASTER)
TIROS	Television and Infrared Observation Satellite (NOAA)
TL	Team Leader
TLCSC	Top–Level Computer Software Component
TLD	TLD Systems, Ltd. (company name)
TLM	Telemetry
TM	Team Member
TMCS	Thermal Monitor and Control Software
TML	Total Mass Loss
TMM	Thermal Math Model
TMON	Telemetry Monitor
TO	Technical Officer
TONS	TDRSS Onboard Navigation System
TP	Test Procedure
TQCM	Temperature–controlled Quartz Crystal Microbalance
TRB	Test Review Board
TRR	Test Readiness Review
TSAS	TDRSS Scheduling Assistance System
TSP	Twisted Shielded Pair
U/D	Update
UARS	Upper Atmosphere Research Satellite
UC	Upconverter (DAS)
UCF	Uplink Command File
UDF	Unit Development Folder
UHMS	Ultra–High Modulus (graphite)
UIDA	Unique Interface Document Agreement
UIID	Unique Instrument Interface Document

UQPSK	Unbalanced Quadraphase Shift Keying
USAF	United States Air Force
USCCS	User Spacecraft Clock Calibration System
USGCRP	United States Global Change Research Program
UT	Umbilical Tower
UT	Universal Time
UTC	Universal Time Code
UUT	Unit Under Test
UV	Ultraviolet
V	Voltage
V&V	Verification and Validation
V/m	Volts per meter
V/T	Voltage/Temperature
VAB	Vehicle Assembly Building
VAFB	Vandenberg Air Force Base
VC	Virtual Channel
VCDU	Virtual Channel Data Unit
VCGW	Virtual Channel Gateway
VCRM	Verification Cross Reference Matrix
Vdc	Volts, direct current
VDT	Video Display Terminal
VEL	VNIR Electronics (ASTER)
VHF	Very High Frequency
VIO	Vectored Input/Output
VIS	Visible
VLS	Vandenberg Launch Site
VNIR	Visible and Near Infrared Radiometer (ASTER)

VP	Verification Plan
VS	Verification Specification
VSR	VNIR Scanning Radiometer (ASTER)
VTRS	Vandenberg Telemetry Receiver Site
VXO	Voltage Controlled Crystal Oscillator
W	Watt
WBS	Work Breakdown Structure
WBSE	Work Breakdown Structure Element
WFF	Wallops Flight Facility
WG	Waveguide
WG	Working Group
WGSW	Waveguide Switch
WS	Workstation
WSC	White Sands Complex
WSGT	White Sands Ground Terminal
WSMC	Western Space and Missile Center
WSMCR	Western Space and Missile Center Regulation
WSMR	White Sands Missile Range
WTR	Western Test Range
WTS	Wallops Tracking Station
XDC	Transducer
XFR	Transfer
XIO	Execute Input/Output
XMT	Transmit
XMTR	Transmitter
Z	Impedance
ZOE	Zone of Exclusion

MARTIN MARIETTA
ASTRO SPACE

EOS-DN-SE&I-034
REV. A

DESIGN NOTE

TITLE: EOS CEI to RD Requirements Traceability Report

AUTHOR: W. Tebay / E. Kohl / M. Lovell

AUTHOR'S MANAGER: S. Carey **DATE** 8/28/93

SE&I MANAGER: S. Carey **DATE** 8/28/93

CHIEF ENGINEER: D. Longcoy **DATE** 8/29/93

REVISIONS

LETTER	DESCRIPTION	DATE	AUTHOR
A	Update compliance matrix for Spacecraft PDR	8/26/93	WMT

MARTIN MARIETTA
ASTRO SPACE

DESIGN NOTE SUMMARY

DN#: EOS–DN–SE&I–034 **Revision:** A **Date:** 8/26/93

Title: EOS CEI to RD Requirements Traceability Report

Author: W. Tebay/ E. Kohl/ M. Lovell **Source ID (ESTA, PD, Memo, etc.):**

Purpose/Questions Answered:

Complete a traceability analysis to verify that each requirement in the Earth Observing System (EOS) Requirements Document for the EOS–AM Spacecraft (420–10–01, dated 30 Oct 1992, Revision B, CH–06) has been fully addressed in the Contract End Item Specification (PS20005396, dated 15 April 1993).

Summary/Answers:

The report attached to this summary sheet verifies that every requirement imposed on the Spacecraft system by the RD has been addressed within the CEI. The CEI is the top–level Martin Marietta performance specification, all lower tier subsystem, assembly, and component performance specifications will be derived from requirements passed down by the CEI. This analysis ensures that by meeting the CEI requirements these lower tier specifications also meet the overall program requirements as defined in the RD. See attached sheet for a list of discrepancies identified in tracing from the RD to the CEI. All discrepancies have an agreed to resolution and will not impact the PDR design.

Recommendations: (Be Specific)	Accepted	Rejected	Baselined	Date

Open Items/Action Required	Responsible Person	Due Date
See attached list.		

Comments

Form Completed By W. Tebay **Date** 8/26/93 **Page** 1 **of** 2

DESIGN NOTE SUMMARY
(CONTINUED)

Below is a summary of those areas in which the CEI does not properly reflect the RD:

RD Requirement	CEI Requrement	Comment
Comply with MOPITT UIID 422–41–05 (RD, 3.1.2.f)	Comply with MOPITT UIID 422–12–15–02	The UIID referenced in the CEI will soon be on contract
Comply with UDC–501 (RD, 3.2.1.1.b)	Not addressed	It is unclear how we should apply this document to EOS.
Spacecraft dry mass + launch hardware = 10,650 (RD, 3.2.1.1.d)	Spacecraft dry mass + launch hardware = 10,655	RD requirment recently changed. CEI to be updated.
Test equipment shall not overstress or damage equipment under test. (RD, 3.2.1.9.5.d)	The test equipment will not subject any flight equipment to environments beyond those defined in PS20005404, Verification Specification.	Not written as a requirement. Will be corrected in CEI.
Supply Managers Reserves of 500 lb and 150 W. (RD, 3.2.1.13.a&b)	Manager's Reserves no longer allocated; only margin.	GSFC agreed to delete requirement from RD.
Orbit data to be supplied to instruments at interval of TBD (RD, 3.2.2.6.3.2.b)	Interval between epoch and delivery spec.d, but not interval between deliveries.	Interval between deliveries will be 1.024 sec. This will be included in CEI update.
Allow changes to virtual channel designations until launch. (RD, 3.2.2.8.3.5.d&e)	Not addressed.	The channels are designated in the UIIDs and aren't expected to need changing.
Supply nav data with latency no more than TBD (1.0) sec. (RD, 3.2.2.8.3.8.a)	Data's age at delivery never to exceed 2.048 (TBR) sec.	GSFC notified of our suggested resolution to their TBD
Wire bundles, fiber optics, & fluid lines readable at both ends and at every 5 meters (RD, 3.3.5.d)	Wire bundles, fiber optics, & fluid lines readable at both ends.	Agreed to by GSFC verbally during CEI review in March 93.

CEI Compliance to RD

RD Rqmt #	RD Requirement Text	CEI Rqmt #	CEI Rqmt Text	Comply	Compliance Comments
1.0	INTRODUCTION				
1.0.a	This document establishes the top-level requirements for the design, development, fabrication, test, and verification of the Earth Observing System (EOS) AM Spacecraft (EOS-AM), so named due to its sun-synchronous orbit and 10:30 AM descending node.				
1.0.b	The spacecraft consists of a mission-unique housekeeping bus and the AM instrument set. First-level performance and interface requirements for the housekeeping bus are defined herein.				
1.0.c	The contractor is responsible for a hierarchy of lower-tier specifications which derive and allocate requirements to subsystems, modules, and components.				
1.0.d	The AM instrument set will be provided as Government-Furnished Equipment (GFE) to the spacecraft contractor.				

CEI Compliance to RD

RD Rqmt #	RD Requirement Text	CEI Rqmt #	CEI Rqmt Text	Comply	Compliance Comments
1.0.e	Instrument performance requirements are not within the scope of this document.				
2.0	APPLICABLE DOCUMENTS				
2.0.a	The following documents, of the exact issue shown, form a part of this Requirements Document to the extent specified herein.				
2.0.b	Where no issue is shown, the revision in effect as of the issue date of this document shall be used.				
2.0.c	In the event of conflict between this document and the contract Statement of Work (SOW), the SOW shall take precedence.				
2.0.d	In the event of a conflict between this document and any other document referenced herein, this document shall take precedence.				
2.1.a	EOS Program Documents				
2.1.b	Reserved				
2.2	EOS Project Documents				

CEI Compliance to RD

RD Rqmt #	RD Requirement Text	CEI Rqmt #	CEI Rqmt Text	Comply	Compliance Comments
2.2.a	420-03-02 General Instrument Interface Specification (GIIS), dated December 1992				
2.2.b	420-05-02 Performance Assurance Requirements for the EOS-AM Spacecraft, Rev. B, dated May 14, 1992, and Change CH-01				
2.2.c	421-10-03 EOS-AM Project Spacecraft Bus Software Management Plan, dated April 6, 1992				
2.2.d	421-20-04 EOS-AM Spacecraft-to-TDRSS Interface Control Document (TBR)				
2.2.e	421-12-11-01 Unique Instrument Interface Document for the Advanced Spaceborne Thermal Emission and Reflection Radiometer (ASTER), dated January 29, 1993				

CEI Compliance to RD

RD Rqmt #	RD Requirement Text	CEI Rqmt #	CEI Rqmt Text	Comply	Compliance Comments
2.2.f	421-12-04-01 Unique Instrument Interface Document for the Moderate-Resolution Imaging Spectroradiometer (MODIS), Revision A, dated 6 November 1992, and Changes CH-01 and CH-02				
2.2.g	421-12-12-02 Unique Instrument Interface Document for the Clouds and the Earth's Radiant Energy System (CERES), Revision A, dated March 1993				
2.2.h	422-38-05 Unique Instrument Interface Document for the Multi-Angle Imaging Spectro-Radiometer (MISR), dated TBD				
2.2.i	422-41-05 Unique Instrument Interface Document for the Measurement of Pollution in the Troposphere (MOPITT), dated TBD				
2.3	Other NASA Documents				
2.3.a	SMAP NASA Software Acquisition Life Cycle, Version 4.0 Feb, 1989				

CEI Compliance to RD

RD Rqmt #	RD Requirement Text	CEI Rqmt #	CEI Rqmt Text	Comply	Compliance Comments
2.3.b	NASA-STD-2100-91 NASA Software Documentation Standard, dated July 29, 1991				
2.3.c	STDN 101.2 Space Network (SN) User's Guide, Rev. 6				
2.3.d	GEVS-SE General Environmental Verification Specification for STS and ELV Payloads, Subsystems and Componnets, January 1990				
2.4	Other Government Documents				
2.4.a	MIL-HDBK-5 Military Handbook, Metallic Materials and Elements for Aerospace Vehicle Structure, Rev E., Change Notice 2				
2.4.b	MIL-HDBK-017 Military Handbook, Polymer Matrix Composites, Vol. 1: Guidelines, Rev. B, Change Notice 1				
2.4.c	WSMCR 127-1 Western Space and Missile Center Range Safety Specification, December 1989				

CEI Compliance to RD

RD Rqmt #	RD Requirement Text	CEI Rqmt #	CEI Rqmt Text	Comply	Compliance Comments
2.4.d	MIL-STD-1522A Standard General Requirements for Safe Design and Operation of Pressurized Missile and Space Systems				
2.4.e	TBD EOS-AM Spacecraft-to-Launch Vehicle Interface Control Document, dated TBD				
2.4.f	UDC-501-89 Universal Documentation System Handbook, Volumes 1-3, August 1989				
2.4.g	Joint Eastern/Western Space and Missile Center (ESMC/WSMC) Policy for Ground Transportation/Handling of Hazardous Materials and Pressurized Vessels used on Missiles and Space Vehicles				
2.4.h	Joint Eastern/Western Space and Missile Center (ESMC/WSMC) Policy for Encapsulated Paylaods				
2.5	Other Documents				

CEI Compliance to RD

RD Rqmt #	RD Requirement Text	CEI Rqmt #	CEI Rqmt Text	Comply	Compliance Comments
2.5.a	CCSDS 701.00-B-1 Consultative Committee for Space Data Systems (CCSDS) Recommendations for Advanced Orbiting Systems (AOS) Networks and Datalinks: Architectural Specification, Blue Book Issue 1, October 1989				
2.5.b	CCSDS 201.0-B-1 Consultative Committee for Space Data Systems (CCSDS) Recommendations for Telecommand, Part 1, Channel Service, Blue Book, January 1987				
2.5.c	CCSDS 202.0-B-1 Consultative Committee for Space Data Systems (CCSDS) Recommendations for Telecommand, Part 2, Data Routing Service, Blue Book, January 1987				
2.5.d	CCSDS 203.0-B-1 Consultative Committee for Space Data Systems (CCSDS) Recommendations for Telecommand, Part 3, Data Management Service, Blue Book, January 1987				

CEI Compliance to RD

RD Rqmt #	RD Requirement Text	CEI Rqmt #	CEI Rqmt Text	Comply	Compliance Comments
2.5.e	CCSDS 301.0-B-1 Consultative Committee for Space Data Systems (CCSDS) Recommendations for Time Code Formats, Blue Book, January 1987				
2.5.f	CCSDS 700.0-G-2 Consultative Committee for Space Data Systems (CCSDS) Recommendations for Advanced Orbiting Systems, Networks and Data Links: Summary of Concept, Rationale and Performance, Green Book, October 1989				
3.0	REQUIREMENTS				
3.1	System Definition				
3.1.1	Orbital Requirements				
3.1.1.a	The EOS-AM spacecraft shall meet the needs of the Earth Observing System by providing required instrument resources and stable viewing in high inclination, sun-synchronous orbit.	3.2.1.5.2.1.a	The Spacecraft Bus shall be capable, through ground-commanded propulsive maneuvers, of maintaining a nominal Operational Phase orbit which is near circular and sun-synchronous with the following characteristics:	Yes	

CEI Compliance to RD

RD Rqmt #	RD Requirement Text	CEI Rqmt #	CEI Rqmt Text	Comply	Compliance Comments
		3.2.1.5.2.2.a	The Spacecraft Bus shall be capable, through ground-commanded propulsive maneuvers, of establishing and maintaining a nominal Operational Phase ground track in which the subsatellite point will follow a path which repeats as follows:	Yes	
		3.7.1.1.1.a	Each Spacecraft Bus subsystem shall perform all functions allocated to it, unless otherwise specified, throughout mission life.	Yes	
		3.7.1.1.1.b	Each subsystem shall provide resources or services as required for Spacecraft and Instrument survival.	Yes	
		3.7.1.1.6.a	Each subsystem shall contribute no more than its allocated error to the Spacecraft pointing accuracy, pointing knowledge, pointing jitter, and pointing stability, in accordance with Tables XIII through XVI.	Yes	
3.1.1.b	a) The spacecraft shall be capable of maintaining an orbit with the following characteristics: (1) Descending Node 10:30 am +/- 15 min (local mean solar time)	3.2.1.5.2.1.a	The Spacecraft Bus shall be capable, through ground-commanded propulsive maneuvers, of maintaining a nominal Operational Phase orbit which is near circular and sun-synchronous with the following characteristics:	Yes	

CEI Compliance to RD

RD Rqmt #	RD Requirement Text	CEI Rqmt #	CEI Rqmt Text	Comply	Compliance Comments
		3.2.1.5.2.1.g	Descending Node 10:30 am +/-15 min (local mean solar time)	Yes	
3.1.1.c	(2) Ground Track: +/- 20 km, 3 sigma, at all latitudes, cross track	3.2.1.5.2.2.a	The Spacecraft Bus shall be capable, through ground-commanded propulsive maneuvers, of establishing and maintaining a nominal Operational Phase ground track in which the subsatellite point will follow a path which repeats as follows:	Yes	
		3.2.1.5.2.2.c	Repetition Accuracy: +/-20km, 3 sigma, at all latitudes, cross track	Yes	
3.1.1.d	(3) Repeat Cycle: 233 rev., 16 days	3.2.1.5.2.2.b	Repetition Interval: 233 revs (16 days)	Yes	
3.1.1.e	(4) Radial Orbit Position Repeatability: +/- 5 km (TBR), 3 sigma, at a given latitude	3.2.1.5.2.2.d	Radial Orbit Position Repeatability: +10/-5 km, 3 sigma at a given latitude	Yes	
3.1.1.f	b) This results in an orbit with the following nominal parameters: (1) Equatorial Altitude: 705 +/- 5 km	3.2.1.5.2.1.b	Equatorial Altitude 705 +/-5 km	Yes	
3.1.1.g	(2) Semi-Major Axis: 7078 +/- 5 km (mean)	3.2.1.5.2.1.c	Semi-Major Axis: 7078 +/-5 km (mean)	Yes	

CEI Compliance to RD

RD Rqmt #	RD Requirement Text	CEI Rqmt #	CEI Rqmt Text	Comply	Compliance Comments
3.1.1.h	(3) Inclination: 98.2 +/- 0.15 degrees	3.2.1.5.2.1.d	Inclination: 98.2 degrees + /-0.15 degrees	Yes	
3.1.1.i	(4) Eccentricity: 0.0012 +/- 0.0004	3.2.1.5.2.1.e	Eccentricity .0012 +/-0.0004	Yes	
3.1.1.j	(5) Argument of Perigee: 90 +/- 20 degrees	3.2.1.5.2.1.f	Argument of Perigee 90 +/-20 degrees	Yes	
3.1.2	EOS-AM Instrument Set				
3.1.2.a	The Spacecraft shall accommodate the EOS-AM instrument set, complying with all requirements defined in the Unique Instrument Interface Documents (UIIDs) listed in Table I.	3.1.5.1.2.a	The Spacecraft Bus shall comply with the interface requirements of the EOS-AM Instrument set listed in Section 3.1.3, as described in the Unique Instrument Interface Documents (UIIDs). The Spacecraft Bus shall comply with the requirements of the UIIDs.	Yes	
3.1.2.b	ASTER 421-12-11-01	3.1.5.1.2.ai	ASTER interface requirements are defined in UIID 422-12-11-01.		N/A
3.1.2.c	CERES 421-12-12-02	3.1.5.1.2.aj	CERES interface requirements are defined in UIID 422-12-12-02.	Yes	N/A
3.1.2.d	MISR 422-12-03-02	3.1.5.1.2.ak	MISR interface requirements are defined in UIID 422-12-03-02.	Yes	N/A

CEI Compliance to RD

RD Rqmt #	RD Requirement Text	CEI Rqmt #	CEI Rqmt Text	Comply	Compliance Comments
3.1.2.e	MODIS 422-12-04-01	3.1.5.1.2.al	MODIS interface requirements are defined in UIID 422-12-04-01.	Yes	N/A
3.1.2.f	MOPITT 422-41-05	3.1.5.1.2.am	MOPITT interface requirements are defined in UIID 422-12-15-02.	No	Update when MOPITT UIID placed on contract.
3.1.3	System Diagram				
3.1.3.a	Figure 1 shows a system level pictorial diagram delineating the relationships between the spacecraft and other space/ground operating elements.				
3.1.4	Interface Requirements				
3.1.4.1	User Interfaces				
3.1.4.1.1	EOSDIS				
3.1.4.1.1.a	The spacecraft shall functionally interface with all users through the EOS Data and Information System (EOSDIS).	3.1.5.4.a	The Spacecraft shall interface with the EOSDIS via the NASA GN. Interfaces which are compatible with GN may be assumed to be compatible with the Deep Space Network (DSN) and the Wallops Tracking Station (WTS).	Yes	

CEI Compliance to RD

RD Rqmt #	RD Requirement Text	CEI Rqmt #	CEI Rqmt Text	Comply	Compliance Comments
		3.2.1.2.2.1.a	The Spacecraft Bus shall format and multiplex Instrument data packets, along with the Spacecraft Bus-generated housekeeping telemetry packets and ancillary data packets, for transmission to the EOSDIS.	Yes	
		3.2.1.2.4.3.a	The Spacecraft Bus shall be capable of simultaneously storing the science data and transmitting it to the EOSDIS in real time.	Yes	
		3.2.3.1.b	The ability to transmit all recorded science data to the EOSDIS via Ku-band TDRSS or X-band DAS links shall be considered the minimum science transmission capability required for success.	Yes	
3.1.4.1.2	Spacecraft Bus-to-Instrument Interfaces				
3.1.4.1.2.a	The spacecraft bus interface with each of the EOS-AM instruments shall comply with 420-03-02, General Instrument Interface Specification (GIIS), except where deviations or waivers have been approved in the UIIDs.	3.1.5.1.1.a	The Spacecraft Bus shall comply with the Instrument interface requirements specified in the General Instrument Interface Specification (GIIS), GSFC 420-03-02.	Yes	

CEI Compliance to RD

RD Rqmt #	RD Requirement Text	CEI Rqmt #	CEI Rqmt Text	Comply	Compliance Comments
		3.1.5.1.2.a	The Spacecraft Bus shall comply with the interface requirements of the EOS-AM Instrument set listed in Section 3.1.3, as described in the Unique Instrument Interface Documents (UIIDs). The Spacecraft Bus shall comply with the requirements of the UIIDs.	Yes	
		3.1.5.1.2.b	If the UIIDs and the GIIS conflict, the UIIDs shall govern.	Yes	
3.1.4.1.2.b	In these cases, the provisions of the UIIDs shall take precedence.	3.1.5.1.2.b	If the UIIDs and the GIIS conflict, the UIIDs shall govern.	Yes	
3.1.4.2	Launch Vehicle Interfaces				

CEI Compliance to RD

RD Rqmt #	RD Requirement Text	CEI Rqmt #	CEI Rqmt Text	Comply	Compliance Comments
3.1.4.2.a	Management roles and responsibilities, integration data, and the definition of the technical activities, interfaces, and schedule requirements among the EOS-AM project, the Launch Vehicle Program Office, and the Western Space and Missile Center (WSMC) are contained in TBD (EOS-AM Spacecraft-to-Launch Vehicle Interface Control Document) and UDC-501 documents.				
3.1.4.2.b	The spacecraft shall be capable of providing telemetry during ascent to the launch vehicle for transmission to the ground.	3.1.5.6.b	Ascent telemetry shall be provided to the Launch Vehicle Interface.	Yes	
		3.2.1.7.1.4.a	The Spacecraft Bus shall be capable of transmitting and receiving data in accordance with the rates (which include all CCSDS overhead) shown in Tables V and VI. The Spacecraft Bus shall be capable of transmitting the data shown in the Table VI Usage column over the link specified by the associated Data Rate, Path, and Return Link Service Columns.	Yes	

CEI Compliance to RD

RD Rqmt #	RD Requirement Text	CEI Rqmt #	CEI Rqmt Text	Comply	Compliance Comments
		3.2.1.7.1.4.y	The hardline umbilical service shall support a 1 kbps I and Q channel return link for Launch/Ascent Health and Safety telemetry to Launch Vehicle.	Yes	
		3.7.1.6.3.b	During the Launch/Ascent Phase, the C&DHS shall provide the real-time health and safety telemetry stream to the Launch Vehicle interface.	Yes	
3.1.4.3	Reserved				
3.1.4.4	Radio Frequency Interfaces				
3.1.4.4.1	Tracking and Data Relay Satellite System (TDRSS)				

CEI Compliance to RD

RD Rqmt #	RD Requirement Text	CEI Rqmt #	CEI Rqmt Text	Comply	Compliance Comments
3.1.4.4.1.a	Primary communications between the ground and the spacecraft shall be through TDRSS.	3.2.1.7.1.3.a	The Spacecraft Bus shall be capable of supporting all Science Mode mission operations with no more than 20 minutes per orbit of TDRSS single access service, Scheduled as necessary to meet the navigation requirements of the Spacecraft, and to satisfy any additional command and telemetry contact needs during non-nominal operations. Multiple Access and Single Access contacts will be scheduled as necessary to meet the navigation requirements of the Spacecraft, and to satisfy any additional command and telemetry contact needs during non-nominal operations.	Yes	
		3.2.1.7.1.4.a	The Spacecraft Bus shall be capable of transmitting and receiving data in accordance with the rates (which include all CCSDS overhead) shown in Tables V and VI. The Spacecraft Bus shall be capable of transmitting the data shown in the Table VI Usage column over the link specified by the associated Data Rate, Path, and Return Link Service Columns.	Yes	

CEI Compliance to RD

RD Rqmt #	RD Requirement Text	CEI Rqmt #	CEI Rqmt Text	Comply	Compliance Comments
		3.2.1.7.1.4.b	The TDRSS SSA HGA service shall support a 10 kbps forward link for Normal High Rate Commanding.	Yes	
3.1.4.4.1.b	These communications shall conform to the Space Network User's Guide (STDN 101.2).	3.1.5.3.1.a	Spacecraft interfaces to the TDRSS shall comply with the Space Network (SN) User's Guide, NASA STDN 101.2.	Yes	
		3.1.5.3.2.a	Spacecraft interfaces to the TDRSS shall conform to the RF ICD between the EOS AM Spacecraft and the Spaceflight Tracking and Data Network, IS20008504.	Yes	

CEI Compliance to RD

RD Rqmt #	RD Requirement Text	CEI Rqmt #	CEI Rqmt Text	Comply	Compliance Comments
3.1.4.4.1.c	The spacecraft shall provide the capabilities to accomplish all communication operations in no more than 20 minutes per orbit of TDRSS single access service.	3.2.1.7.1.3.a	The Spacecraft Bus shall be capable of supporting all Science Mode mission operations with no more than 20 minutes per orbit of TDRSS single access service, Scheduled as necessary to meet the navigation requirements of the Spacecraft, and to satisfy any additional command and telemetry contact needs during non-nominal operations. Multiple Access and Single Access contacts will be scheduled as necessary to meet the navigation requirements of the Spacecraft, and to satisfy any additional command and telemetry contact needs during non-nominal operations.	Yes	
3.1.4.4.1.d	The TDRSS Multiple Access Service may be utilized when additional contact time is needed to satisfy navigation requirements.				
3.1.4.4.2	Direct Access Service (DAS) User Ground Stations				
3.1.4.4.2.a	The Spacecraft shall provide the capability for X-band telemetry communications with DAS user ground stations	3.1.5.5.a	The Spacecraft shall transfer data to DAS users via X-band links.	Yes	

CEI Compliance to RD

RD Rqmt #	RD Requirement Text	CEI Rqmt #	CEI Rqmt Text	Comply	Compliance Comments
		3.2.1.7.1.4.a	The Spacecraft Bus shall be capable of transmitting and receiving data in accordance with the rates (which include all CCSDS overhead) shown in Tables V and VI. The Spacecraft Bus shall be capable of transmitting the data shown in the Table VI Usage column over the link specified by the associated Data Rate, Path, and Return Link Service Columns.	Yes	
		3.2.1.7.1.4.h	DB (X-Band) DAS service shall support a 12.5 Mbps return link on both I and Q channels for real-time direct broadcast of low-rate science data.	Yes	
		3.2.1.7.1.4.i	Real-time DB shall not be simultaneous with DP. It shall be on the I-channel only if DDL or DP' is active, otherwise the same data shall be I and Q channels.	Yes	
		3.2.1.7.1.4.j	The DAS DDL service shall support a 12.5 Mbps return link on the I channel and 105 kbps return link on the Q channel for real-time direct downlink of high-rate science data.	Yes	

CEI Compliance to RD

RD Rqmt #	RD Requirement Text	CEI Rqmt #	CEI Rqmt Text	Comply	Compliance Comments
		3.2.1.7.1.4.k	When the DAS DDL service is active, DB low-rate science data shall be on the I channel with the DDL high-rate data on the Q channel.	Yes	
		3.2.1.7.1.4.l	DAS DDL shall not be simultaneous with DP or DP'.	Yes	
		3.2.1.7.1.4.m	The DAS DP earth coverage service shall support a 75 kbps return link on both I and Q channels for playback of the science data records to provide a backup to the TDRSS KSA science data downlink.	Yes	
		3.2.1.7.1.4.n	The DP downlink data shall be bit-interleaved.	Yes	
		3.2.1.7.1.4.o	The DAS system shall support DP only. DAS DP shall not be simultaneous with DB, DP', OR DDL.	Yes	
		3.2.1.7.1.4.p	The DAS DP' service Shall support a 12.5 Mbps return link on the I channel and 105 kbps on the Q channel.	Yes	
		3.2.1.7.1.4.q	The DP downlink data shall be bit interleaved.	Yes	
		3.2.1.7.1.4.s	When DP' is active on the Q-channel only, DB may be on the I channel.	Yes	

CEI Compliance to RD

RD Rqmt #	RD Requirement Text	CEI Rqmt #	CEI Rqmt Text	Comply	Compliance Comments
		3.2.1.7.1.4.y	The GN S-band Omni emergency link service shall support a 16 kbps data rate on the I channel for Housekeeping or Diagnostic/Dump data and a 512 kbps data rate on the Q channel for Housekeeping playback only.	Yes	
3.1.4.4.3	Ground Network (GN)/Deep Space Network (DSN)/Wallops Tracking Station (WTS)				
3.1.4.4.3.a	The spacecraft shall provide the capability for S-Band telemetry and command communications with GN/DSN/WTS stations.	3.1.5.4.a	The Spacecraft shall interface with the EOSDIS via the NASA GN. Interfaces which are compatible with GN may be assumed to be compatible with the Deep Space Network (DSN) and the Wallops Tracking Station (WTS).	Yes	
		3.2.1.7.4.1.a	The Spacecraft Bus shall be capable of emergency command and telemetry communications with the Ground Network (GN).	Yes	
3.1.4.4.3.b	The design of the RF link shall be compatible with GN/DSN/WTS operational capabilities and shall permit the simultaneous transmission of real time and playback emergency telemetry.	3.1.5.4.a	The Spacecraft shall interface with the EOSDIS via the NASA GN. Interfaces which are compatible with GN may be assumed to be compatible with the Deep Space Network (DSN) and the Wallops Tracking Station (WTS).	Yes	

CEI Compliance to RD

RD Rqmt #	RD Requirement Text	CEI Rqmt #	CEI Rqmt Text	Comply	Compliance Comments
		3.2.1.3.2.2.4.a	The Spacecraft Bus shall be capable of simultaneous transmission of real-time and recorded telemetry data via the GN link.	Yes	
		3.2.1.7.4.1.a	The Spacecraft Bus shall be capable of emergency command and telemetry communications with the Ground Network (GN).	Yes	
3.1.4.5	Support Equipment Interfaces				
3.1.4.5.a	The spacecraft shall make provisions for interfacing with the GSE and facilities necessary for all spacecraft development and pre-launch operations.	3.1.5.7.a	The Spacecraft shall interface with GSE and facilities as necessary to support Spacecraft integration, test, and prelaunch operations.	Yes	
		3.1.5.7.b	The Spacecraft shall interface with Launch Vehicle System supplied GSE and facilities defined in the EOS AM Spacecraft to Launch Vehicle Interface Requirements Document, IS20008503.	Yes	
3.2	System Requirements				
3.2.1	General System Requirements				

CEI Compliance to RD

RD Rqmt #	RD Requirement Text	CEI Rqmt #	CEI Rqmt Text	Comply	Compliance Comments
3.2.1.1	Launch Vehicle and Launch Site Compatibility				
3.2.1.1.a	The spacecraft shall be compatible with the TBD intermediate class launch vehicle which is described in TBD.	3.1.5.6.a	The Spacecraft shall be capable of launching on a launch vehicle which meets the requirements specified in the EOS AM Spacecraft to Launch Vehicle Interface Requirements Document, IS20008503.	Yes	
3.2.1.1.b	The spacecraft shall comply with TBD (EOS-AM Spacecraft-to-Launch Vehicle Interface Control Document); the Universal Documentation System Handbook (UDC-501, Volumes 1-3); the Western Space and Missile Center (WSMC) Range Safety Specification (WSMCR 127-1); and the Joint Eastern/Western Space and Missile Center (ESMC/WSMC) Policy for Encapsulated Paylaods (if applicable).	3.1.5.6.a	The Spacecraft shall be capable of launching on a launch vehicle which meets the requirements specified in the EOS AM Spacecraft to Launch Vehicle Interface Requirements Document, IS20008503.	Yes	
		3.3.5.1.1.a	The Spacecraft safety program shall meet the programmatic requirements of GSFC 420-05-02, Performance Assurance Requirements for EOS Spacecrafts and the Joint Eastern/Western Space and Missile Center (ESMC/WSMC) Policy for Encapsulated Instruments (if applicable).	Yes	
		3.3.5.1.2.a	The Spacecraft shall comply with the requirements of WSMCR 127-1.	Yes	WSMCR calls out MIL-STD-1576

CEI Compliance to RD

RD Rqmt #	RD Requirement Text	CEI Rqmt #	CEI Rqmt Text	Comply	Compliance Comments
		9.9.9.9.a	No-match in Contract End Item Specification PS20005386	No	It is unclear that UDC-501 applies to EOS, thus we believe we are still compliant.
3.2.1.1.c	The spacecraft and associated flight support equipment shall be designed to withstand the most severe environmental levels imposed by the worst case existing intermediate class ELVs.	3.2.5.2.2.a	The Spacecraft shall perform as specified herein before, during and after exposure to worst case launch environment induced by the Titan IV and Atlas IIAS launch vehicles, as defined in the Titan IV Users Handbook, and in the Mission Planners Guide for the Atlas Launch Vehicle Family.	Yes	
3.2.1.1.d	The dry mass of the spacecraft plus the mission-peculiar launch hardware shall not exceed 10,650 lbs.	3.2.1.12.a	The Spacecraft Bus structure shall be designed to support a total Spacecraft mass the wet mass of the spacecraft plus any available margin as specified in Table X.	No	Current CEI allocates out a dry mass os 10,655 lb. CEI will be updated.
		3.7.1.1.2.a	Each subsystem shall not exceed its mass allocation as indicated in Table X.	Yes	
3.2.1.2	Operational Lifetime				

CEI Compliance to RD

RD Rqmt #	RD Requirement Text	CEI Rqmt #	CEI Rqmt Text	Comply	Compliance Comments
3.2.1.2.a	The spacecraft shall have a minimum operational lifetime of five years.	3.2.3.1.a	The Spacecraft Bus shall provide the Instruments with the minimum resources and services specified herein for a mission life of five years.	Yes	
3.2.1.3	Spacecraft Coordinate Systems				
3.2.1.3.a	A right-hand, orthogonal, body-fixed reference coordinate system shall be used for the spacecraft.	3.2.2.2.a	A right-hand, orthogonal, body-fixed reference coordinate system shall be used for the Spacecraft.	Yes	
3.2.1.4	Environmental Definition				
3.2.1.4.1	Natural Environment				
3.2.1.4.1.a	The spacecraft shall be designed to meet all performance requirements for operations in the natural environment conditions, e.g., atmospheric density and composition, plasma, charged particle and electromagnetic radiation, meteoroids and space debris, magnetic and gravitational fields, thermal, pressure, physical constraints, etc.	3.2.5.1.a	The Spacecraft Bus shall meet the performance requirements specified herein during and after exposure to the environmental conditions defined in the General Interface Specification (GIS), IS20008501.	Yes	

CEI Compliance to RD

RD Rqmt #	RD Requirement Text	CEI Rqmt #	CEI Rqmt Text	Comply	Compliance Comments
3.2.1.4.1.b	The spacecraft shall be designed with no operational constraints relative to natural environment conditions during checkout, launch, and on-orbit operations.	3.2.5.4.a	Where practical, the Spacecraft shall not impose operational constraints due to natural environment conditions during checkout, launch, and on-orbit operations.	Yes	
3.2.1.4.2	Induced Environment				
3.2.1.4.2.a	The spacecraft shall be designed to meet all performance requirements following exposure to check-out and launch environments and during exposure to the on-orbit induced environments (electromagnetic, electrostatic, vibration, acoustic, shock, linear acceleration, thermal, humidity, reduced atmosphere, contamination, plasma, and radiation).	3.2.5.1.a	The Spacecraft Bus shall meet the performance requirements specified herein during and after exposure to the environmental conditions defined in the General Interface Specification (GIS), IS20008501.	Yes	
3.2.1.4.2.b	The spacecraft shall meet the requirements defined in this document when exposed to the environment induced by the instruments.	3.1.5.1.1.a	The Spacecraft Bus shall comply with the Instrument interface requirements specified in the General Instrument Interface Specification (GIIS), GSFC 420-03-02.	Yes	

CEI Compliance to RD

RD Rqmt #	RD Requirement Text	CEI Rqmt #	CEI Rqmt Text	Comply	Compliance Comments
3.2.1.4.2.c	The total contamination induced by the spacecraft shall be managed in accordance with the requirements of 420-05-02, Performance Assurance Requirements for the EOS-AM Spacecraft.	3.2.5.2.3.a	The Spacecraft Bus shall comply with the contamination requirements set forth in NASA 420-05-02, and with the requirements of the Contamination Control Plan.	Yes	
3.2.1.5	Autonomy				
3.2.1.5.a	The spacecraft shall monitor the housekeeping data of subsystems and instruments.	3.2.1.13.1.a	In the event of a failure on the Spacecraft, the Spacecraft Bus shall provide those resources and services required for Spacecraft Bus and Instrument survival.	Yes	
		3.2.1.13.2.2.a	The Spacecraft Bus shall perform on-orbit health and status checks of all subsystems and Instruments to verify Spacecraft integrity and status.	Yes	
3.2.1.5.b	Upon detection of pre-defined anomalous conditions and sets of conditions, the spacecraft shall issue commands to restore full operations safely, achieve degraded or partial operations safely, or achieve a safe configuration in which to await action from the ground.	3.2.1.6.4.1.a	The Spacecraft shall autonomously enter Safe Mode under either of the following conditions: a) detection that the processors or flight software are incapable of supporting safe Spacecraft operations or b) the GN&C subsystem fails to maintain the spacecraft attitude within predetermined thresholds.	Yes	

CEI Compliance to RD

RD Rqmt #	RD Requirement Text	CEI Rqmt #	CEI Rqmt Text	Comply	Compliance Comments
		3.2.1.13.3.2.2.a	The Spacecraft shall autonomously transition to a safe operating mode in each of the following cases: a. When a failure occurs after which continued Spacecraft operation may threaten the survival of the Spacecraft; and	Yes	
		3.2.1.13.3.2.2.c	The Spacecraft shall maintain the achieved safe configuration until otherwise commanded by the ground. (This does not preclude further autonomous response and safing)	Yes	
		3.2.1.13.3.2.3.b	The Spacecraft Bus shall be capable of issuing predefined command sequences in response to selected anomalous conditions that do not require entry into a safe configuration.	Yes	
		3.7.1.10.5.b	Upon detection of an active trigger condition, the Telemetry Monitor shall issue a predefined command or shall trigger execution of a predefined RTCS.	Yes	

CEI Compliance to RD

RD Rqmt #	RD Requirement Text	CEI Rqmt #	CEI Rqmt Text	Comply	Compliance Comments
3.2.1.5.c	The spacecraft shall save the data defining the cause of the anomaly for transmission to the ground, and shall generate, record and transmit safe mode telemetry to the ground until a normal operations mode is achieved.	3.2.1.3.2.1.1.e	d. Indications of resource usage,	Yes	
		3.2.1.3.2.1.2.a	Spacecraft Health and Safety telemetry shall contain data indicative of the current status of on-board subsystems and Instruments.	Yes	
		3.2.1.3.2.1.2.b	The Spacecraft shall be capable of transmitting the data in a seperate 1 kbps stream.	Yes	
		3.2.1.3.2.1.2.c	The Spacecraft shall also include this Health and Safety telemetry in the housekeeping telemetry stream.	Yes	
		3.2.1.3.2.1.4.a	The Spacecraft Bus shall retain in storage at least four orbits of housekeeping telemetry data seleceted to support ground-based anomaly diagnosis.	Yes	
		3.2.1.3.2.2.2.a	The Spacecraft Bus shall be capable of gathering and transmitting telemetry during all modes employed after initial on-orbit communications with the ground have been established.	Yes	
		3.2.1.13.4.b	The Spacecrat Bus shall transmit the data to the ground for check-out, fault detection, and location of faults to the point at which a redundant path is available.	Yes	

CEI Compliance to RD

RD Rqmt #	RD Requirement Text	CEI Rqmt #	CEI Rqmt Text	Comply	Compliance Comments
3.2.1.5.d	The spacecraft shall monitor the health of its C&DH processors and, upon detection of anomalous operation, enter the GN&C safe mode.	3.2.1.6.4.1.a	The Spacecraft shall autonomously enter Safe Mode under either of the following conditions: a) detection that the processors or flight software are incapable of supporting safe Spacecraft operations or b) the GN&C subsystem fails to maintain the spacecraft attitude within predetermined thresholds.	Yes	
3.2.1.5.e	The spacecraft shall be capable of detecting and reacting to selected anomalous conditions onboard the spacecraft by issuing predefined command sequences.	3.2.1.13.3.2.3.b	The Spacecraft Bus shall be capable of issuing predefined command sequences in response to selected anomalous conditions that do not require entry into a safe configuration.	Yes	
3.2.1.5.f	During periods of abnormal operations, the spacecraft shall be capable of maintaining the resources required for its survival.	3.2.1.13.1.a	In the event of a failure on the Spacecraft, the Spacecraft Bus shall provide those resources and services required for Spacecraft Bus and Instrument survival.	Yes	
		3.2.1.13.3.2.3.b	The Spacecraft Bus shall be capable of issuing predefined command sequences in response to selected anomalous conditions that do not require entry into a safe configuration.	Yes	

CEI Compliance to RD

RD Rqmt #	RD Requirement Text	CEI Rqmt #	CEI Rqmt Text	Comply	Compliance Comments
3.2.1.5.g	The spacecraft shall be capable of autonomously transitioning to a safe condition.	3.2.1.6.4.1.a	The Spacecraft shall autonomously enter Safe Mode under either of the following conditions: a) detection that the processors or flight software are incapable of supporting safe Spacecraft operations or b) the GN&C subsystem fails to maintain the spacecraft attitude within predetermined thresholds.	Yes	
		3.2.1.6.4.4.a	If the Spacecraft enters safe mode due to an attitude maintenance anomaly the Spacecraft Bus shall acquire and maintain a thermal- and power-safe attitude.	Yes	
		3.2.1.13.3.1.a	The Spacecraft Bus shall continuously provide resources and services as required for Spacecraft Bus and Instrument survival.	Yes	
3.2.1.5.h	All autonomous functions shall be capable of being overridden by ground control.	3.7.1.1.8.1.5.a	All subsystems shall accept and execute commands to override or inhibit the execution of autonomous functions which may interfere with Spacecraft operations or jeopardize the health of the Spacecraft.	Yes	
3.2.1.6	Safety				
3.2.1.6.1	General Safety Requirements				

CEI Compliance to RD

RD Rqmt #	RD Requirement Text	CEI Rqmt #	CEI Rqmt Text	Comply	Compliance Comments
3.2.1.6.1.a	The spacecraft flight and ground systems safety program shall meet programmatic requirements of 420-05-02, Performance Assurance Requirements for the EOS-AM Spacecraft.	3.3.5.1.1.a	The Spacecraft safety program shall meet the programmatic requirements of GSFC 420-05-02, Performance Assurance Requirements for EOS Spacecrafts and the Joint Eastern/Western Space and Missile Center (ESMC/WSMC) Policy for Encapsulated Instruments (if applicable).	Yes	
3.2.1.6.1.b	Actions for satisfying safety engineering requirements shall be in the following order of precedence: a) Hazard elimination or removal by appropriate design measures	3.3.5.2.1.a	Where practical, hazards shall be eliminated or removed through appropriate design measures.	Yes	
		3.3.5.2.1.b	Hazards which cannot be eliminated or removed shall, where practical, be prevented through incorporation and use of safety devices or features.	Yes	
		3.3.5.2.1.c	Remaining hazards shall be controlled through the use of warning devices and/or special procedures.	Yes	
3.2.1.6.1.c	b) Prevention of hazards through use of safety devices or features	3.3.5.2.1.b	Hazards which cannot be eliminated or removed shall, where practical, be prevented through incorporation and use of safety devices or features.	Yes	
3.2.1.6.1.d	c) Control of hazards through use of warning devices and/or special procedures	3.3.5.2.1.c	Remaining hazards shall be controlled through the use of warning devices and/or special procedures.	Yes	

CEI Compliance to RD

RD Rqmt #	RD Requirement Text	CEI Rqmt #	CEI Rqmt Text	Comply	Compliance Comments
3.2.1.6.2	Malfunction Detection and Control				
3.2.1.6.2.a	Any automatic safing or switchover capability of functional paths shall be capable of being overridden by the ground control	3.2.1.13.3.2.1.a	The Spacecraft shall allow the override of all autonomous anomaly responses by ground control.	Yes	
		3.7.1.1.8.1.5.a	All subsystems shall accept and execute commands to override or inhibit the execution of autonomous functions which may interfere with Spacecraft operations or jeopardize the health of the Spacecraft.	Yes	
3.2.1.6.2.b	Safety interlocks, hardware and/or software shall be implemented whenever practical to prevent unsafe operations from being executed.	3.3.5.2.3.a	The Spacecraft Bus shall incorporate safety interlock mechanisms implemented in hardware or software to prevent the execution of predefined commands which are potentially hazardous to personnel or to the Spacecraft without prior confirmation or arming by ground operators.	Yes	
3.2.1.6.2.c	Fail safe modes shall be implemented that prevent or minimize damage resulting from failures.	3.2.1.13.1.2.a	Redundant functional paths shall be separated or protected such that no single credible event will cause loss of both paths.	Yes	
		3.2.1.13.1.3.a	No single Spacecraft functional or physical failure shall cause other failures external to the component in which the failure occurs.	Yes	

CEI Compliance to RD

RD Rqmt #	RD Requirement Text	CEI Rqmt #	CEI Rqmt Text	Comply	Compliance Comments
3.2.1.6.3	Pressurized Elements/Propellants				
3.2.1.6.3.a	All pressurized components shall be designed in accordance with MIL-STD-1522A.	3.3.5.4.2.a	All Spacecraft Pressurized components shall be designed to withstand the testing described in ML-STD-1522A, Section 5, Approach A, using appropiate factors of Saftey (FS) as defined in the IS20008501, General Interface Specification.	Yes	
3.2.1.6.3.b	Pressurized vessels shall be designed in accordance with MIL-STD-1522A, Section 5, Approach A.	3.3.5.4.2.a	All Spacecraft Pressurized components shall be designed to withstand the testing described in ML-STD-1522A, Section 5, Approach A, using appropiate factors of Saftey (FS) as defined in the IS20008501, General Interface Specification.	Yes	
3.2.1.6.3.c	Factors of Safety shall be used per Table VIII.	3.3.5.4.2.a	All Spacecraft Pressurized components shall be designed to withstand the testing described in ML-STD-1522A, Section 5, Approach A, using appropiate factors of Saftey (FS) as defined in the IS20008501, General Interface Specification.	Yes	
3.2.1.6.4	Explosive Devices				

CEI Compliance to RD

RD Rqmt #	RD Requirement Text	CEI Rqmt #	CEI Rqmt Text	Comply	Compliance Comments
3.2.1.6.4.a	Explosive devices shall be armed as near to the time of expected use as feasible.	3.3.5.4.1.a	The Spacecraft Bus shall incorporate arming mechanisms which allow explosive devices to be armed as near to the time of expected use as feasible, and to be disarmed promptly when no longer in use.	Yes	
3.2.1.6.4.b	Explosive devices shall be promptly disarmed when no longer in use.	3.3.5.4.1.a	The Spacecraft Bus shall incorporate arming mechanisms which allow explosive devices to be armed as near to the time of expected use as feasible, and to be disarmed promptly when no longer in use.	Yes	
3.2.1.6.4.c	Pyrotechnic Devices shall meet the design requirements specified in WSMCR 127-1 and MIL-STD-1576.	3.3.5.1.2.a	The Spacecraft shall comply with the requirements of WSMCR 127-1.	Yes	WSMCR calls out MIL-STD-1576
3.2.1.6.5	Hazardous Materials				
3.2.1.6.5.a	Spacecraft requirements for hazardous materials, flammability, and outgassing shall be as specified in 420-05-02, Performance Assurance Requirements for EOS-AM Spacecraft.	3.3.5.2.5.a	The design of subsystems and components which utilize liquids or gasses shall preclude hazards due to the release of such fluids.	Yes	

CEI Compliance to RD

RD Rqmt #	RD Requirement Text	CEI Rqmt #	CEI Rqmt Text	Comply	Compliance Comments
		3.3.5.3.a	The Spacecraft Bus shall select only materials identified in the Program Approved Materials and Processes List, 20008650.	Yes	The PAML includes requirements for hazardous materials, flammability, and outgassing as specified in the PAR
3.2.1.6.6	Ground Safety				
3.2.1.6.6.a	Hazard detection and safing shall be provided with an appropriate level of independence from those subsystems being monitored.	3.3.5.2.2.a	Automated detection and safing of hazards which may cause personnel injury or loss of the Spacecraft shall be independent of those subsystems being monitored.	Yes	
		3.3.5.2.2.b	Where practical, the detection and safing of lesser hazards shall also follow this practice.	Yes	
3.2.1.6.6.b	Special emphasis shall be placed on hazards which may result in human death or system loss.	3.3.5.2.2.a	Automated detection and safing of hazards which may cause personnel injury or loss of the Spacecraft shall be independent of those subsystems being monitored.	Yes	

CEI Compliance to RD

RD Rqmt #	RD Requirement Text	CEI Rqmt #	CEI Rqmt Text	Comply	Compliance Comments
		3.4.1.a	Design decisions shall be made to accommodate compliance with safety requirements specified in this document before accommodating any other considerations (e.g., cost, schedule. performance).	Yes	
3.2.1.6.6.c	Protective features shall be employed to preclude personnel injury for all ground maintenance actions.	3.3.5.2.1.a	Where practical, hazards shall be eliminated or removed through appropriate design measures.	Yes	
		3.3.5.2.1.b	Hazards which cannot be eliminated or removed shall, where practical, be prevented through incorporation and use of safety devices or features.	Yes	
		3.3.5.2.1.c	Remaining hazards shall be controlled through the use of warning devices and/or special procedures.	Yes	
		3.3.5.2.2.a	Automated detection and safing of hazards which may cause personnel injury or loss of the Spacecraft shall be independent of those subsystems being monitored.	Yes	
		3.3.5.2.2.b	Where practical, the detection and safing of lesser hazards shall also follow this practice.	Yes	

CEI Compliance to RD

RD Rqmt #	RD Requirement Text	CEI Rqmt #	CEI Rqmt Text	Comply	Compliance Comments
		3.3.5.2.3.a	The Spacecraft Bus shall incorporate safety interlock mechanisms implemented in hardware or software to prevent the execution of predefined commands which are potentially hazardous to personnel or to the Spacecraft without prior confirmation or arming by ground operators.	Yes	
		3.3.5.2.5.a	The design of subsystems and components which utilize liquids or gasses shall preclude hazards due to the release of such fluids.	Yes	
		3.3.5.2.6.a	Test equipment shall incorporate any safety interlocks or other safety features.	Yes	
		3.3.5.2.7.a	Any safety feature included in any Spacecraft test equipment shall give a visual, auditory, or electronic indication of activation when it is activated.	Yes	
3.2.1.7	Reliability				
3.2.1.7.a	Non-critical functions shall be designed to fail safe.	3.2.1.13.3.2.3.b	The Spacecraft Bus shall be capable of issuing predefined command sequences in response to selected anomalous conditions that do not require entry into a safe configuration.	Yes	

CEI Compliance to RD

RD Rqmt #	RD Requirement Text	CEI Rqmt #	CEI Rqmt Text	Comply	Compliance Comments
3.2.1.7.1	Failure Tolerance				
3.2.1.7.1.a	Spacecraft functions shall, as a minimum, be tolerant of a single credible hard failure.	3.2.1.13.1.1.a	The Spacecraft Bus shall perform the functions specified herein after any single credible hard failure.	Yes	
3.2.1.7.1.b	Functional redundancy required to provide this failure tolerance may be achieved by considering the spacecraft as an integrated system.				
3.2.1.7.1.c	Failures critical to spacecraft survival shall be detectable and shall cause the spacecraft to transition to a safe mode.	3.2.1.13.3.2.2.a	The Spacecraft shall autonomously transition to a safe operating mode in each of the following cases: a. When a failure occurs after which continued Spacecraft operation may threaten the survival of the Spacecraft; and	Yes	
		3.2.1.13.3.2.2.b	b. When it is unknown whether or not continued Spacecraft operation may threaten the survival of the Spacecraft.	Yes	
3.2.1.7.1.d	Non-critical functions shall be designed to fail safe.				

CEI Compliance to RD

RD Rqmt #	RD Requirement Text	CEI Rqmt #	CEI Rqmt Text	Comply	Compliance Comments
		3.2.1.13.3.2.3.b	The Spacecraft Bus shall be capable of issuing predefined command sequences in response to selected anomalous conditions that do not require entry into a safe configuration.	Yes	
3.2.1.7.1.e	Spacecraft design shall be such that one failure does not cause additional failures.	3.2.1.13.1.3.a	No single Spacecraft functional or physical failure shall cause other failures external to the component in which the failure occurs.	Yes	
3.2.1.7.1.f	The spacecraft shall preclude the propagation of instrument failures to other instruments and spacecraft subsystems.	3.2.1.13.1.3.a	No single Spacecraft functional or physical failure shall cause other failures external to the component in which the failure occurs.	Yes	
3.2.1.7.2	Redundancy				
3.2.1.7.2.a	The spacecraft design shall provide redundancy management and redundancy status to the ground.	3.2.1.3.2.1.1.a	Spacecraft Bus communications return links shall contain housekeeping telemetry which includes:	Yes	
		3.2.1.3.2.1.1.c	b. Data indicative of the current status of the on-board subsystems and Instruments,	Yes	
		3.2.1.3.2.1.1.h	g. Notification of all autonomous switching between redundant paths,	Yes	

CEI Compliance to RD

RD Rqmt #	RD Requirement Text	CEI Rqmt #	CEI Rqmt Text	Comply	Compliance Comments
		3.7.1.1.8.2.4.b	Subsystem Housekeeping telemetry shall, as a minimum, contain the following: (a) Redundancy status of the subsystem and components; (b) Health and safety status data; (c) Indications of resource usage; (d) Indications of sensed failures or anomalies, if any; (e) Data suitable for verifying execution of each Spacecraft command; (f) Notification of all autonomous switching between redundant paths.	Yes	
3.2.1.7.2.b	Alternate or redundant spacecraft functional paths shall be separated or protected such that any event which causes the loss of one functional path will not result in the loss of the alternate or redundant functional path(s).	3.2.1.13.1.2.a	Redundant functional paths shall be separated or protected such that no single credible event will cause loss of both paths.	Yes	
3.2.1.8	Reserved				
3.2.1.9	Maintainability				
3.2.1.9.1	General (Maintainability) Design Requirements				

CEI Compliance to RD

RD Rqmt #	RD Requirement Text	CEI Rqmt #	CEI Rqmt Text	Comply	Compliance Comments
3.2.1.9.1.a	a) The spacecraft shall be of modular construction to the extent practical to support integration and test.	3.2.4.1.6.a	The Spacecraft shall be of modular construction to the extent practical to facilitate I&T.	Yes	
3.2.1.9.1.b	b) Redundant functional paths shall be designed to permit verification of their operational status without removal of spacecraft equipment.	3.7.1.1.8.2.4.a	The housekeeping telemetry provided by each subsystem shall allow ground controllers to assess the operational state of the subsystem, monitor critical subsystem function, and aid in fault detection and correction.	Yes	
3.2.1.9.1.c	c) Software and its associated hardware shall be designed so that software revisions/corrections can be uplinked to the spacecraft.	3.2.1.14.1.2.a	Spacecraft Bus components which comprise computer programs shall, where practical, be implemented as software and be reprogrammable on orbit.	Yes	
3.2.1.9.1.d	d) Security and operating software installation shall include software integrity and revision checking as part of the software development environment.	3.2.1.14.1.1.a	The Spacecraft Bus flight software shall incorporate provisions for verifying the integrity of and the revision of loaded software via telemetry.	Yes	

CEI Compliance to RD

RD Rqmt #	RD Requirement Text	CEI Rqmt #	CEI Rqmt Text	Comply	Compliance Comments
3.2.1.9.1.e	e) Standardization shall be incorporated where practical in flight hardware, ground hardware, software, technical data formats, format access, and procedures as practical to facilitate integration and test.	3.2.4.3.1.a	The Spacecraft Bus shall utilize standardized hardware, software, data formats, and procedures to facilitate maintenance.	Yes	
3.2.1.9.1.f	f) Spacecraft subsystems shall support pre-launch integration and checkout of the spacecraft through simulation, status checks, and execution of sample command loads.	3.1.5.7.a	The Spacecraft shall interface with GSE and facilities as necessary to support Spacecraft integration, test, and prelaunch operations.	Yes	
		3.2.4.3.5.a	The Spacecraft shall support prelaunch integration and checkout of the Spacecraft by incorporating interfaces for external stimuli or simulators, where appropriate, and by performing status checks and executing sample command loads.	Yes	
3.2.1.9.1.g	g) The spacecraft shall be capable of being tested on the ground with or without a direct RF link.	3.2.4.3.5.b	Command and housekeeping telemetry capabilities shall be available both with and without RF links.	Yes	

CEI Compliance to RD

RD Rqmt #	RD Requirement Text	CEI Rqmt #	CEI Rqmt Text	Comply	Compliance Comments
3.2.1.9.1.h	h) The Spacecraft shall be capable of being tested with the command and data handling elements of the EOS ground system.	3.1.5.8.a	The Spacecraft shall participate in end-to-end testing of the command and data handling elements of the EOS Ground System.	Yes	
3.2.1.9.1.i	i) The spacecraft shall have the capability for on-orbit verification consisting of health and status checks.	3.2.1.3.2.a	The Spacecraft Bus shall collect and transmit to ground Spacecraft telemetry data.	Yes	
		3.2.1.3.2.1.1.a	Spacecraft Bus communications return links shall contain housekeeping telemetry which includes:	Yes	
		3.2.1.3.2.1.1.b	a. Indication of the current Spacecraft System Mode,	Yes	
		3.2.1.3.2.1.1.c	b. Data indicative of the current status of the on-board subsystems and Instruments,	Yes	
		3.2.1.3.2.1.2.a	Spacecraft Health and Safety telemetry shall contain data indicative of the current status of on-board subsystems and Instruments.	Yes	
		3.2.1.3.2.1.2.c	The Spacecraft shall also include this Health and Safety telemetry in the housekeeping telemetry stream.	Yes	
		3.2.1.13.2.2.a	The Spacecraft Bus shall perform on-orbit health and status checks of all subsystems and Instruments to verify Spacecraft integrity and status.	Yes	

CEI Compliance to RD

RD Rqmt #	RD Requirement Text	CEI Rqmt #	CEI Rqmt Text	Comply	Compliance Comments
		3.7.1.1.8.2.2.b	These data shall indicate the current status of the subsystem, and shall allow assessment and monitoring of the subsystem.	Yes	
3.2.1.9.2	Accessibility				
3.2.1.9.2.a	a) Items which for safety reasons may require rapid maintenance shall be readily accessible.	3.2.4.1.1.a	Items which for safety reasons may require prelaunch maintenance shall be readily accessible.	Yes	
3.2.1.9.2.b	b) Items requiring frequent access during integration and test or other pre-launch operations shall be readily accessible.	3.2.4.1.2.a	Items requiring frequent access during I&T or other prelaunch operations shall be accessible during I&T.	Yes	
3.2.1.9.3	Reserved				
3.2.1.9.4	Human Factors				
3.2.1.9.4.a	a) Items of the same or similar form which have different functional properties shall be readily identifiable and distinguishable.	3.2.4.3.2.a	Items of identical or similar form which have different functional characteristics shall be readily identifiable and distinguishable through marking or other means.	Yes	

CEI Compliance to RD

RD Rqmt #	RD Requirement Text	CEI Rqmt #	CEI Rqmt Text	Comply	Compliance Comments
3.2.1.9.4.b	b) Calibration or adjustment controls shall be provided with appropriate stops to prevent damage.	3.2.4.2.2.a	Controls and actuators for calibration or adjustment shall incorporate mechanical stops where necessary to prevent damage.	Yes	
3.2.1.9.4.c	c) All items shall be located or guarded so that they will not be susceptible to damage.	3.2.4.2.1.a	All Spacecraft components which are fragile or otherwise susceptible to damage shall, where practical, be guarded or located so as to reduce this susceptibility.	Yes	
3.2.1.9.4.d	d) Sensitive adjustment points shall be located or guarded so that adjustments will not be disturbed inadvertently.	3.2.4.2.3.a	Sensitive adjustment controls and actuators shall be located or guarded to protect them from inadvertent perturbation.	Yes	
3.2.1.9.4.e	e) Valve position (open, closed, intermediate) shall be readily ascertained.	3.2.4.4.4.a	The position (open, closed, intermediate) of all valves shall be electronically or analytically ascertainable.	Yes	
3.2.1.9.5	Test Equipment				
3.2.1.9.5.a	a) Specialized maintenance equipment shall be kept to a minimum.	3.2.4.3.3.a	The Spacecraft Bus shall be designed to use existing ground equipment to perform maintenance functions, wherever practical, rather than requiring the design of new equipment.	Yes	

CEI Compliance to RD

RD Rqmt #	RD Requirement Text	CEI Rqmt #	CEI Rqmt Text	Comply	Compliance Comments
		3.2.4.3.4.a	When new maintentance equipment is required to maintain Spacecraft elements which are part of a group of physically or functionally identical or similar elements, the equipment shall be designed to perform its task(s) on each element of that group, where practical.	Yes	
3.2.1.9.5.b	b) All test equipment shall be functionally verifiable.	3.2.4.3.7.a	All test equipment shall be functionally verifiable.	Yes	
3.2.1.9.5.c	c) The use of test equipment shall not introduce a safety hazard.	3.3.5.2.6.a	Test equipment shall incorporate any safety interlocks or other safety features.	Yes	
		3.3.5.2.7.a	Any safety feature included in any Spacecraft test equipment shall give a visual, auditory, or electronic indication of activation when it is activated.	Yes	
3.2.1.9.5.d	d) Test equipment shall not overstress or damage equipment under test.	3.2.4.3.6.a	The test equipment will not subject any flight equipment to environments beyond those defined in PS20005404, Verification Specification.	No	Not written as a requirement. Will be updated.
3.2.1.9.5.e	e) The test equipment shall have built-in-safety features and/or safety interlocks which shall give an indication when activated.	3.3.5.2.6.a	Test equipment shall incorporate any safety interlocks or other safety features.	Yes	

CEI Compliance to RD

RD Rqmt #	RD Requirement Text	CEI Rqmt #	CEI Rqmt Text	Comply	Compliance Comments
		3.3.5.2.7.a	Any safety feature included in any Spacecraft test equipment shall give a visual, auditory, or electronic indication of activation when it is activated.	Yes	
3.2.1.9.5.f	f) Test equipment shall be calibrated in conformance with 420-05-02, Performance Assurance Requirements for EOS-AM Spacecraft.	3.2.4.3.8.a	Spacecraft test equipment shall be calibrated in accordance with GSFC 420-05-02.	Yes	
3.2.1.9.6	Reserved				
3.2.1.9.7	Reserved				
3.2.1.10	Transportability				
3.2.1.10.a	The spacecraft shall be capable of being transported in a suitable, environmentally-controlled shipping container.	3.2.6.1.a	The Spacecraft shall be capable of being transported in an environmentally-controlled shipping container. The imposed environmental levels will not exceed those specified for transportation in the GIS.	Yes	
3.2.1.11	Reserved				
3.2.1.12	Spacecraft Mode Transition				

CEI Compliance to RD

RD Rqmt #	RD Requirement Text	CEI Rqmt #	CEI Rqmt Text	Comply	Compliance Comments
3.2.1.12.a	The spacecraft shall be capable of being configured into a mode consistent with launch on the specified launch vehicle and capable of transitioning to on-orbit operations.	3.1.4.c	The Spacecraft mission phase transition shall begin in the Pre-launch phase.	Yes	
		3.7.1.1.1.a	Each Spacecraft Bus subsystem shall perform all functions allocated to it, unless otherwise specified, throughout mission life.	Yes	
		3.7.1.1.1.b	Each subsystem shall provide resources or services as required for Spacecraft and Instrument survival.	Yes	
		3.7.1.1.3.a	All subsystems shall provide the minimum capability demanded of them during each mode defined in 3.1.4.2 without drawing greater than the power levels presented in Table XI for that mode.	Yes	
3.2.1.13	Manager's Reserve				
3.2.1.13.a	A 500 lb Manager's Reserve shall be carried in the spacecraft mass budget.	9.9.9.9.d	No-match in Contract End Item Specification PS20005386	No	Missing from CEI. GSFC has stated that this will be removed from the RD.

CEI Compliance to RD

RD Rqmt #	RD Requirement Text	CEI Rqmt #	CEI Rqmt Text	Comply	Compliance Comments
3.2.1.13.b	A 150 W Manager's Reserve shall be carried in the spacecraft power budget.	9.9.9.9.d	No-match in Contract End Item Specification PS20005386	No	Missing from CEI. GSFC has stated that this will be removed from the RD.
3.2.2	Performance Requirements				
3.2.2.1	Reserved				
3.2.2.2	Mechanical				
3.2.2.2.1	Instrument Mass				
3.2.2.2.1.a	The spacecraft shall be capable of accommodating the instrument set mass as defined in the UIIDs.	3.1.5.1.2.a	The Spacecraft Bus shall comply with the interface requirements of the EOS-AM Instrument set listed in Section 3.1.3, as described in the Unique Instrument Interface Documents (UIIDs). The Spacecraft Bus shall comply with the requirements of the UIIDs.	Yes	
		3.1.5.1.2.b	If the UIIDs and the GIIS conflict, the UIIDs shall govern.	Yes	
		3.1.5.1.2.c	UIID Instrument parameters defined below shall be assumed for Spacecraft Bus design activities.	Yes	

CEI Compliance to RD

RD Rqmt #	RD Requirement Text	CEI Rqmt #	CEI Rqmt Text	Comply	Compliance Comments
		3.1.5.1.2.d	The spacecraft shall accomodate ASTER's 992.3 lb mass.	Yes	
		3.1.5.1.2.e	The spacecraft shall accomodate MISR's 297.7 lb mass.	Yes	
		3.1.5.1.2.f	The spacecraft shall accomodate MODIS's 613.0 lb mass.	Yes	
		3.1.5.1.2.g	The spacecraft shall accomodate CERES's 198.5 lb mass.	Yes	
		3.1.5.1.2.h	The spacecraft shall accomodate MOPITT's 352.8 lb mass.	Yes	
3.2.2.2.2	Mechanical Requirements				
3.2.2.2.2.a	The spacecraft and associated flight equipment shall be of adequate strength and stiffness to resist without failure all imposed environmental loads including ground testing, ground transport, launch, and orbital operations. In addition, the following specific performance requirements shall be adhered to.	3.2.5.1.a	The Spacecraft Bus shall meet the performance requirements specified herein during and after exposure to the environmental conditions defined in the General Interface Specification (GIS), IS20008501.	Yes	

CEI Compliance to RD

RD Rqmt #	RD Requirement Text	CEI Rqmt #	CEI Rqmt Text	Comply	Compliance Comments
		3.2.5.2.2.a	The Spacecraft shall perform as specified herein before, during and after exposure to worst case launch environment induced by the Titan IV and Atlas IIAS launch vehicles, as defined in the Titan IV Users Handbook, and in the Mission Planners Guide for the Atlas Launch Vehicle Family.	Yes	
		3.7.1.7.1.5.4.a	The SMS structure design shall preclude creep strain leading to rupture, detrimental deformation, or creep buckling of compression members during their design life.	Yes	
3.2.2.2.2.1	Failure Tolerance				
3.2.2.2.2.1.a	The spacecraft shall be designed so that failure of a single structural member shall not degrade the strength or stiffness of the spacecraft to the extent that the mission is placed in jeopardy or a catastrophic failure of the spacecraft results.	3.7.1.7.1.5.2.a	The structure shall withstand any credible failure of any single structural member while retaining sufficient strength and stiffness to preclude catastrophic Spacecraft failure or jeopardy to mission success.	Yes	
3.2.2.2.2.1.b	Where that is not practical, adequate load testing and analysis shall be used to verify that a single structure member failure is not credible.	3.7.1.7.1.5.3.a	The credibility of failures of structural members which are critical to Spacecraft integrity or mission success shall be precluded via load testing and analysis.	Yes	

CEI Compliance to RD

RD Rqmt #	RD Requirement Text	CEI Rqmt #	CEI Rqmt Text	Comply	Compliance Comments
3.2.2.2.2.2	Damage Tolerance				
3.2.2.2.2.2.a	The spacecraft structure and associated flight equipment shall be tolerant of damage from sources such as impact by both micrometeroids and space debris.	3.2.5.1.a	The Spacecraft Bus shall meet the performance requirements specified herein during and after exposure to the environmental conditions defined in the General Interface Specification (GIS), IS20008501.	Yes	
3.2.2.2.2.3	Structural Reliability				
3.2.2.2.2.3.a	All spacecraft hardware shall adhere to the structural reliability requirements as defined in 420-05-02, Performance Assurance Requirements for the EOS-AM Spacecraft.	3.2.3.3.a	The Spacecraft Bus reliability program shall comply with the requirements of GSFC 420-05-02.	Yes	
3.2.2.2.2.4	Fatigue				
3.2.2.2.2.4.a	Safe-life design shall be adopted for all major load-carrying spacecraft structures.	3.7.1.7.1.5.5.a	Any required "safe-life" or "fail-safe" analyses of structural elements shall be performed in accordance with GSFC-731-0005-83.	Yes	

CEI Compliance to RD

RD Rqmt #	RD Requirement Text	CEI Rqmt #	CEI Rqmt Text	Comply	Compliance Comments
3.2.2.2.2.4.b	These structures shall be capable of surviving, without failure, a total number of mission cycles that is a minimum of four times greater than the total number of mission cycles expected in service (shown by analysis or by test through a rationally derived cyclic loading and temperature spectrum). This does not preclude fail-safe structural features.	3.7.1.7.1.5.6.a	All primary load-carrying structures shall be capable of enduring four times the number of thermal cycles expected in service.	Yes	
3.2.2.2.2.5	Creep				
3.2.2.2.2.5.a	The spacecraft structure design shall preclude cumulative creep strain leading to rupture, detrimental deformation or creep buckling of compression members during their design life.	3.7.1.7.1.5.4.a	The SMS structure design shall preclude creep strain leading to rupture, detrimental deformation, or creep buckling of compression members during their design life.	Yes	
3.2.2.2.2.5.b	Analysis shall be supplemented by test to verify the creep characteristics for the critical combination of loads and temperatures.	3.7.1.7.1.5.3.a	The credibility of failures of structural members which are critical to Spacecraft integrity or mission success shall be precluded via load testing and analysis.	Yes	
		3.7.1.7.1.5.5.a	Any required "safe-life" or "fail-safe" analyses of structural elements shall be performed in accordance with GSFC-731-0005-83.	Yes	

CEI Compliance to RD

RD Rqmt #	RD Requirement Text	CEI Rqmt #	CEI Rqmt Text	Comply	Compliance Comments
3.2.2.2.2.6	Thermal Distortion				
3.2.2.2.2.6.a	The effects of thermal distortions in the spacecraft structure shall be included, where applicable, in interface specifications, analyses of attached systems, and deformation analyses such as loads and pointing analyses.	3.7.1.1.5.a	Each subsystem shall contribute no more than its allocated error to the high gain antenna pointing error as indicated in Table XIII.	Yes	
		3.7.1.1.6.a	Each subsystem shall contribute no more than its allocated error to the Spacecraft pointing accuracy, pointing knowledge, pointing jitter, and pointing stability, in accordance with Tables XIII through XVI.	Yes	
		3.7.1.7.1.5.8.a	The SMS design shall ensure that heat load changes due to any of the following Spacecraft changes do not induce a creep strain at any interface which could compromise Spacecraft structural performance:	Yes	
		3.7.1.7.2.3.a	The SMS shall provide mechanisms where needed at EM interfaces to limit relative thermal distortion and transfer of loads from the Spacecraft.	Yes	

CEI Compliance to RD

RD Rqmt #	RD Requirement Text	CEI Rqmt #	CEI Rqmt Text	Comply	Compliance Comments
3.2.2.2.2.6.b	The spacecraft structure design shall minimize the effects of thermal distortion on other subsystems.	3.7.1.7.1.7.a	The SMS shall comply with the allocated pointing and stability requirements under all conditions wherein SMS components are maintained within specified temperature ranges.	Yes	
		3.7.1.7.2.3.a	The SMS shall provide mechanisms where needed at EM interfaces to limit relative thermal distortion and transfer of loads from the Spacecraft.	Yes	
3.2.2.2.2.7	Reserved				
3.2.2.2.2.8	On-Orbit Loads				
3.2.2.2.2.8.a	The spacecraft structure shall withstand on-orbit operational loads.	3.7.1.7.1.5.2.a	The structure shall withstand any credible failure of any single structural member while retaining sufficient strength and stiffness to preclude catastrophic Spacecraft failure or jeopardy to mission success.	Yes	
		3.7.1.7.1.5.3.a	The credibility of failures of structural members which are critical to Spacecraft integrity or mission success shall be precluded via load testing and analysis.	Yes	

CEI Compliance to RD

RD Rqmt #	RD Requirement Text	CEI Rqmt #	CEI Rqmt Text	Comply	Compliance Comments
		3.7.1.7.1.5.4.a	The SMS structure design shall preclude creep strain leading to rupture, detrimental deformation, or creep buckling of compression members during their design life.	Yes	
		3.7.1.7.1.5.8.a	The SMS design shall ensure that heat load changes due to any of the following Spacecraft changes do not induce a creep strain at any interface which could compromise Spacecraft structural performance:	Yes	
		3.7.1.7.2.3.a	The SMS shall provide mechanisms where needed at EM interfaces to limit relative thermal distortion and transfer of loads from the Spacecraft.	Yes	
3.2.2.2.2.9	Standard Structural Interfaces and Commonality				
3.2.2.2.2.9.a	The spacecraft shall employ standard fasteners for structural and mechanical attachments where practical.	3.7.1.7.1.3.a	The SMS shall employ standard fasteners for structural and mechanical attachments where practical.	Yes	
3.2.2.2.3	Mechanisms Requirements				

CEI Compliance to RD

RD Rqmt #	RD Requirement Text	CEI Rqmt #	CEI Rqmt Text	Comply	Compliance Comments
3.2.2.2.3.a	The requirements listed below are applicable to the mechanical or electromechanical devices that control the movement of a mechanical part relative to another part.				
3.2.2.2.3.1	Spacecraft Deployment Mechanisms				
3.2.2.2.3.1.a	Mechanisms shall be provided on the spacecraft for deployment of spacecraft equipment.	3.7.1.2.6.b	The EPS shall provide the mechanisms for deployment of the Solar Array boom and blanket.	Yes	
		3.7.1.7.2.2.a	The SMS shall provide the HGA boom and mechanisms for deploying the HGA.	Yes	
3.2.2.2.3.2	Solar Array Drive Mechanism				
3.2.2.2.3.2.a	The spacecraft shall include mechanisms which rotate the solar array at selectable rates suitable to mission applications.	3.7.1.7.2.1.2.a	The SAD shall accommodate rotation of the solar array at all rates consistent with the rate selectability requirements of the EPS.	Yes	
3.2.2.2.3.3	Antenna Pointing Mechanism				

CEI Compliance to RD

RD Rqmt #	RD Requirement Text	CEI Rqmt #	CEI Rqmt Text	Comply	Compliance Comments
3.2.2.2.3.3.a	The spacecraft shall provide pointing mechanisms to meet antenna tracking requirements.	3.2.1.7.1.9.a	The Spacecraft Bus shall maintain ephemeris data for up to four TDRS spacecraft, and shall autonomously, track selected TDSR spacecraft with the HGA as selected by ground command.	Yes	
3.2.2.3	Thermal Control				
3.2.2.3.a	The spacecraft shall provide an integrated thermal control subsystem which maintains structures, components, subsystems, and instrument interfaces within their specified thermal limits.	3.7.1.3.1.a	The TCS shall maintain all Spacecraft Bus assemblies, and other subsystem components within their specified thermal limits during all mission phases.	Yes	
3.2.2.3.1	Reserved				
3.2.2.3.2	Design Performance Requirements				
3.2.2.3.2.a	The spacecraft shall be designed to provide continuous heat rejection of waste thermal energy for the housekeeping equipment and for instruments which cannot reject heat with local radiators for all planned vehicle operating environments and orientations.	3.7.1.3.1.a	The TCS shall maintain all Spacecraft Bus assemblies, and other subsystem components within their specified thermal limits during all mission phases.	Yes	

CEI Compliance to RD

RD Rqmt #	RD Requirement Text	CEI Rqmt #	CEI Rqmt Text	Comply	Compliance Comments
		3.7.1.3.1.b	The TCS shall perform heat acquisition, transport, and rejection for Spacecraft Bus subsystems and assemblies, and for Instruments which are thermally controlled by the CPHTS.	Yes	
3.2.2.3.2.1	Quiescent Operation				
3.2.2.3.2.1.a	The instrument coldplate design shall be capable of operation over a range of 10% to 100% of the full thermal load capacity of the coldplate.	3.7.1.3.3.a	The TCS shall maintain coldplate interface temperatures within the specified operational range under all coldplate heat load conditions between 10% of the maximum cold plate capacity and 100% of the projected Insturment maximum heat loads.	Yes	
3.2.2.3.2.2	Orientation Requirements				
3.2.2.3.2.2.a	The Spacecraft shall maintain thermal control of subsystems and instruments during all expected mission phases.	3.7.1.1.1.a	Each Spacecraft Bus subsystem shall perform all functions allocated to it, unless otherwise specified, throughout mission life.	Yes	
		3.7.1.1.1.b	Each subsystem shall provide resources or services as required for Spacecraft and Instrument survival.	Yes	

CEI Compliance to RD

RD Rqmt #	RD Requirement Text	CEI Rqmt #	CEI Rqmt Text	Comply	Compliance Comments
		3.7.1.3.1.a	The TCS shall maintain all Spacecraft Bus assemblies, and other subsystem components within their specified thermal limits during all mission phases.	Yes	
3.2.2.3.2.3	Automation				
3.2.2.3.2.3.a	The spacecraft thermal design shall be automated to accommodate system operating modes, changing heat loads, power profiles, and failures.	3.2.1.13.1.a	In the event of a failure on the Spacecraft, the Spacecraft Bus shall provide those resources and services required for Spacecraft Bus and Instrument survival.	Yes	
		3.2.1.13.1.b	The minimum services shall include: a. Accepting and executing commands from ground delivered via contingency or emergency links;	Yes	
		3.2.1.13.1.g	f. Maintaining spacecraft attitude; and	Yes	
		3.2.1.13.1.h	g. Providing thermal control both for operating equipment (i.e. survival critical equipment) and non-operating equipment.	Yes	

CEI Compliance to RD

RD Rqmt #	RD Requirement Text	CEI Rqmt #	CEI Rqmt Text	Comply	Compliance Comments
		3.7.1.3.5.a	The TCS shall maintain all Instrument, subsystem, and component interfaces within specified limits under all combinations of the following: a.) Changing Spacecraft operating modes and configurations within normal operating bounds; b.) Changing Instrument operating modes and configurations within normal operating bounds; and c.) Changing component power profiles within normal operating bounds.	Yes	
3.2.2.3.3	Structures/Environmental Protection				
3.2.2.3.3.a	All external thermal control coatings must be nondegradable or degradation limited.				
3.2.2.3.4	Thermal Control				
3.2.2.3.4.1	Housekeeping Equipment				
3.2.2.3.4.1.a	The thermal control subsystem shall provide collection, transport, and rejection of waste heat generated by spacecraft housekeeping equipment.	3.7.1.3.1.b	The TCS shall perform heat acquisition, transport, and rejection for Spacecraft Bus subsystems and assemblies, and for Instruments which are thermally controlled by the CPHTS.	Yes	

CEI Compliance to RD

RD Rqmt #	RD Requirement Text	CEI Rqmt #	CEI Rqmt Text	Comply	Compliance Comments
3.2.2.3.4.1.b	The spacecraft equipment modules shall each be locally controlled using their own integral radiators.	3.7.1.3.1.a	The TCS shall maintain all Spacecraft Bus assemblies, and other subsystem components within their specified thermal limits during all mission phases.	Yes	
3.2.2.3.4.2	Instruments				
3.2.2.3.4.2.a	The thermal control subsystem shall provide redundant capability for collection, transport, and rejection of waste heat generated by spacecraft instruments identified in 3.1.2 which cannot reject waste heat by local radiators.	3.2.1.13.1.a	In the event of a failure on the Spacecraft, the Spacecraft Bus shall provide those resources and services required for Spacecraft Bus and Instrument survival.	Yes	
		3.2.1.13.1.h	g. Providing thermal control both for operating equipment (i.e. survival critical equipment) and non-operating equipment.	Yes	
		3.7.1.3.1.b	The TCS shall perform heat acquisition, transport, and rejection for Spacecraft Bus subsystems and assemblies, and for Instruments which are thermally controlled by the CPHTS.	Yes	
3.2.2.3.4.2.b	The spacecraft shall support instrument radiative heat rejection by accommodating the instrument radiator Fields of View (FOVs) defined in the UIIDs.	3.1.5.1.1.a	The Spacecraft Bus shall comply with the Instrument interface requirements specified in the General Instrument Interface Specification (GIIS), GSFC 420-03-02.	Yes	

CEI Compliance to RD

RD Rqmt #	RD Requirement Text	CEI Rqmt #	CEI Rqmt Text	Comply	Compliance Comments
		3.1.5.1.2.a	The Spacecraft Bus shall comply with the interface requirements of the EOS-AM Instrument set listed in Section 3.1.3, as described in the Unique Instrument Interface Documents (UIIDs). The Spacecraft Bus shall comply with the requirements of the UIIDs.	Yes	
3.2.2.3.4.3	Thermal Interfaces				
3.2.2.3.4.3.a	The thermal design shall easily interface with housekeeping equipment and instruments.	3.7.1.3.8.a	TheTCS shall allow Instrument or Major Assembly removal from the Spacecraft prior to launch without requiring disassembly of the TCS.	Yes	
3.2.2.3.4.4	Leak Detection				
3.2.2.3.4.4.a	The spacecraft shall provide the capability to detect the existence of a leak in the thermal control subsystem.	3.7.1.3.9.a	The TCS and/or GSE shall incorporate the necessary sensors to enable the detection of leaks in the TCS during ground operations.	Yes	
		3.7.1.3.9.b	The TCS shall provide telemetry suitable for the detection of leaks in the TCS on-orbit.	Yes	
3.2.2.3.5	Thermal Margins				

CEI Compliance to RD

RD Rqmt #	RD Requirement Text	CEI Rqmt #	CEI Rqmt Text	Comply	Compliance Comments
3.2.2.3.5.a	As a goal, the spacecraft shall provide a minimum heater margin of 25% and an active heat rejection margin of 10%. Heat rejection margins can be demonstrated by hot case temperature results which are lower than the maximum allowable design temperatures.	3.7.1.3.11.a	As a goal, each TCS heater shall be capable of providing 25% more heat than the maximum heat required to comply with the thermal control requirements.	Yes	
		3.7.1.3.12.a	As a goal, TCS radiators which are actively controlled (i.e. modulated), if any, shall have a hot-case heat rejection margin of at least 10%.	Yes	
3.2.2.4	Electrical Power				
3.2.2.4.1	General Description				
3.2.2.4.1.a	The spacecraft shall use photovoltaic array(s) for solar energy conversion and batteries for energy storage to accommodate power delivery.	3.7.1.2.6.a	The EPS shall incorporate photovoltaic GaAs solar cell arrays for the conversion of incident solar energy to electrical energy.	Yes	
3.2.2.4.2	Primary Functions				
3.2.2.4.2.a	a) The spacecraft shall provide all instrument and housekeeping electrical power during all mission phases.	3.7.1.1.1.b	Each subsystem shall provide resources or services as required for Spacecraft and Instrument survival.	Yes	
		3.7.1.2.1.a	The EPS shall provide all necessary power to all subsystems and Instruments.	Yes	

CEI Compliance to RD

RD Rqmt #	RD Requirement Text	CEI Rqmt #	CEI Rqmt Text	Comply	Compliance Comments
3.2.2.4.2.b	b) Reserved				
3.2.2.4.2.c	c) The spacecraft shall have the capability to monitor and control performance to the degree required to isolate and clear faults, provide alerts for emergencies, and control loads by appropriate load shedding.	3.2.1.3.2.1.1.a	Spacecraft Bus communications return links shall contain housekeeping telemetry which includes:	Yes	
		3.2.1.3.2.1.1.e	d. Indications of resource usage,	Yes	
		3.2.1.3.2.1.1.h	g. Notification of all autonomous switching between redundant paths,	Yes	
		3.2.1.13.4.b	The Spacecrat Bus shall transmit the data to the ground for check-out, fault detection, and location of faults to the point at which a redundant path is available.	Yes	
		3.7.1.1.8.2.4.b	Subsystem Housekeeping telemetry shall, as a minimum, contain the following: (a) Redundancy status of the subsystem and components; (b) Health and safety status data; (c) Indications of resource usage; (d) Indications of sensed failures or anomalies, if any; (e) Data suitable for verifying execution of each Spacecraft command; (f) Notification of all autonomous switching between redundant paths.	Yes	

CEI Compliance to RD

RD Rqmt #	RD Requirement Text	CEI Rqmt #	CEI Rqmt Text	Comply	Compliance Comments
		3.7.1.1.8.2.4.d	Any autonomous corrective actions taken shall be reported to the ground via housekeeping telemetry. This report shall be periodically repeated until acknowledged from the ground.	Yes	
		3.7.1.2.5.a	The EPS shall incorporate fuses to clear system faults.	Yes	
		3.7.1.2.5.b	The EPS shall protect power sources against overloads and faults in the distribution subsystem or in user loads.	Yes	
		3.7.1.2.5.c	The EPS shall protect user loads against adverse impact or damage due to other user load faults.	Yes	
		3.7.1.2.5.d	The EPS shall protect its distribution subsystem against faults or overloads in the EPS or in user loads.	Yes	
		3.7.1.2.5.e	All power distribution wiring shall be either current-limited or short-circuit protected.	Yes	
		3.7.1.10.2.a	The FSWS shall initiate spacecraft load shedding upon sensing that the orbit average spacecraft power load exceeds the spacecraft power generation capability.	Yes	

CEI Compliance to RD

RD Rqmt #	RD Requirement Text	CEI Rqmt #	CEI Rqmt Text	Comply	Compliance Comments
3.2.2.4.2.d	d) The spacecraft shall provide protection for:				
3.2.2.4.2.d.a	power sources against overloads or faults in the distribution function, subsystems, or instruments.	3.7.1.2.5.b	The EPS shall protect power sources against overloads and faults in the distribution subsystem or in user loads.	Yes	
3.2.2.4.2.d.b	the distribution function against overloads and faults in the power subsystem, other subsystems, or instruments.	3.7.1.2.5.d	The EPS shall protect its distribution subsystem against faults or overloads in the EPS or in user loads.	Yes	
3.2.2.4.2.d.c	the user loads to prevent adverse impact or damage due to faults in other subsystems or instruments.	3.7.1.2.5.c	The EPS shall protect user loads against adverse impact or damage due to other user load faults.	Yes	
3.2.2.4.2.e	3) The spacecrafts shall provide power management and distribution for selecting, connecting and disconnecting the instruments and selected housekeeping equipment to the main electrical bus.	3.7.1.2.1.a	The EPS shall provide all necessary power to all subsystems and Instruments.	Yes	
		3.7.1.2.1.b	The EPS shall provide the capability to connect and disconnect individual feeds to Instruments and the HGA.	Yes	
3.2.2.4.3	Performance Requirements				
3.2.2.4.3.1	Power Levels				

CEI Compliance to RD

RD Rqmt #	RD Requirement Text	CEI Rqmt #	CEI Rqmt Text	Comply	Compliance Comments
3.2.2.4.3.1.a	The spacecraft shall be capable of providing the instrument set power requirements as defined in the UIIDs after 5 years of mission life.	3.1.5.1.2.a	The Spacecraft Bus shall comply with the interface requirements of the EOS-AM Instrument set listed in Section 3.1.3, as described in the Unique Instrument Interface Documents (UIIDs). The Spacecraft Bus shall comply with the requirements of the UIIDs.	Yes	
		3.1.5.1.2.b	If the UIIDs and the GIIS conflict, the UIIDs shall govern.	Yes	
		3.1.5.1.2.c	UIID Instrument parameters defined below shall be assumed for Spacecraft Bus design activities.	Yes	
		3.1.5.1.2.y	The spacecraft shall provide ASTER a maximum 1 orbit average of 525 Watts, a 2 orbit average of 470 Watts, and a maximum peak of 761 Watts electrical power.	Yes	
		3.1.5.1.2.z	The spacecraft shall provide MISR a maximum 1 orbit average of 80 Watts, a 2 orbit average of 75 Watts, and a maximum peak of 135 Watts electrical power.	Yes	

CEI Compliance to RD

RD Rqmt #	RD Requirement Text	CEI Rqmt #	CEI Rqmt Text	Comply	Compliance Comments
		3.1.5.1.2.aa	The spacecraft shall provide MODIS a maximum 1 orbit average of 245 Watts, a 2 orbit average of 240 Watts, and a maximum peak of 315 Watts electrical power.	Yes	
		3.1.5.1.2.ab	The spacecraft shall provide CERES a maximum 1 orbit and 2 orbit average of 95 Watts each and a maximum peak of 185 Watts electrical power.	Yes	
		3.1.5.1.2.ac	The spacecraft shall provide MOPITT a maximum 1 orbit and 2 orbit average of 250 Watts each and a maximum peak of 250 Watts electrical power.	Yes	
		3.2.3.1.a	The Spacecraft Bus shall provide the Instruments with the minimum resources and services specified herein for a mission life of five years.	Yes	
		3.7.1.2.1.a	The EPS shall provide all necessary power to all subsystems and Instruments.	Yes	
3.2.2.4.3.2	Bus Voltage				
3.2.2.4.3.2.a	The spacecraft shall distribute 120 +/- 4% VDC regulated power to the instrument(s) and subsystem interfaces.	3.7.1.2.3.a	The EPS shall deliver 120 Vdc +/- 4% power to Instrument and subsystem interfaces.	Yes	
3.2.2.4.3.3	Power Generation				

CEI Compliance to RD

RD Rqmt #	RD Requirement Text	CEI Rqmt #	CEI Rqmt Text	Comply	Compliance Comments
3.2.2.4.3.3.a	The spacecraft shall convert incident solar energy by means of photovoltaic solar arrays.	3.7.1.2.6.a	The EPS shall incorporate photovoltaic GaAs solar cell arrays for the conversion of incident solar energy to electrical energy.	Yes	
3.2.2.4.3.4	Energy Storage				
3.2.2.4.3.4.a	The spacecraft shall provide energy storage to meet power requirements during the eclipse portion of the orbit.	3.7.1.1.1.b	Each subsystem shall provide resources or services as required for Spacecraft and Instrument survival.	Yes	
		3.7.1.2.7.a	The EPS shall utilize batteries to store electrical energy to accommodate power needs during the eclipse portion of the orbit.	Yes	
3.2.2.4.3.5	Power Management and Distribution				
3.2.2.4.3.5.a	All power distribution wiring shall be either short-circuit protected or current limited.	3.7.1.2.5.e	All power distribution wiring shall be either current-limited or short-circuit protected.	Yes	
3.2.2.5	Communications				
3.2.2.5.1	General Description				

CEI Compliance to RD

RD Rqmt #	RD Requirement Text	CEI Rqmt #	CEI Rqmt Text	Comply	Compliance Comments
3.2.2.5.1.a	The spacecraft shall provide for the transmission and reception of housekeeping telemetry, commands, and tracking data and instrument telemetry, commands, and science data.	3.2.1.3.2.a	The Spacecraft Bus shall collect and transmit to ground Spacecraft telemetry data.	Yes	
		3.2.1.4.b	All navigation and tracking services shall be communicated via the links shown in Table IV.	Yes	
		3.2.1.4.1.a	The Spacecraft Bus shall be capable of determining Spacecraft position and velocity vectors by processing Doppler data extracted from signals from TDRSS satellites. This is known as the TDRSS On-board Navigation System (TONS).	Yes	
		3.2.1.7.1.4.a	The Spacecraft Bus shall be capable of transmitting and receiving data in accordance with the rates (which include all CCSDS overhead) shown in Tables V and VI. The Spacecraft Bus shall be capable of transmitting the data shown in the Table VI Usage column over the link specified by the associated Data Rate, Path, and Return Link Service Columns.	Yes	
		3.2.1.7.1.4.b	The TDRSS SSA HGA service shall support a 10 kbps forward link for Normal High Rate Commanding.	Yes	

CEI Compliance to RD

RD Rqmt #	RD Requirement Text	CEI Rqmt #	CEI Rqmt Text	Comply	Compliance Comments
		3.2.1.7.1.4.c	The TDRSS SMA HGA service shall support a 1 kbps forward link for Normal Low Rate Commanding.	Yes	
		3.2.1.7.1.4.d	The TDRSS SSA Omni service shall support a 125 kbps forward link for Contingency Commanding.	Yes	
		3.2.1.7.1.4.e	The GN S-band Omni service shall support a 2 kbps forward link for emergency commanding.	Yes	
		3.2.1.7.1.4.f	The hardline umbilical service shall support a 2 kbps forward link for pre-launch GSE commands.	Yes	
		3.2.1.7.1.4.g	The TDRSS KSA HGA service shall support a 75 kbps return link on both I and Q channels for real-time or playback of science data.	Yes	
		3.2.1.7.1.4.h	DB (X-Band) DAS service shall support a 12.5 Mbps return link on both I and Q channels for real-time direct broadcast of low-rate science data.	Yes	
		3.2.1.7.1.4.i	Real-time DB shall not be simultaneous with DP. It shall be on the I-channel only if DDL or DP' is active, otherwise the same data shall be I and Q channels.	Yes	

CEI Compliance to RD

RD Rqmt #	RD Requirement Text	CEI Rqmt #	CEI Rqmt Text	Comply	Compliance Comments
		3.2.1.7.1.4.j	The DAS DDL service shall support a 12.5 Mbps return link on the I channel and 105 kbps return link on the Q channel for real-time direct downlink of high-rate science data.	Yes	
		3.2.1.7.1.4.k	When the DAS DDL service is active, DB low-rate science data shall be on the I channel with the DDL high-rate data on the Q channel.	Yes	
		3.2.1.7.1.4.l	DAS DDL shall not be simultaneous with DP or DP'.	Yes	
		3.2.1.7.1.4.m	The DAS DP earth coverage service shall support a 75 kbps return link on both I and Q channels for playback of the science data records to provide a backup to the TDRSS KSA science data downlink.	Yes	
		3.2.1.7.1.4.n	The DP downlink data shall be bit-interleaved.	Yes	
		3.2.1.7.1.4.o	The DAS system shall support DP only. DAS DP shall not be simultaneous with DB, DP', OR DDL.	Yes	
		3.2.1.7.1.4.p	The DAS DP' service Shall support a 12.5 Mbps return link on the I channel and 105 kbps on the Q channel.	Yes	

CEI Compliance to RD

RD Rqmt #	RD Requirement Text	CEI Rqmt #	CEI Rqmt Text	Comply	Compliance Comments
		3.2.1.7.1.4.q	The DP downlink data shall be bit interleaved.	Yes	
		3.2.1.7.1.4.r	DAS DP' shall not be simultaneous with DP or DDL.	Yes	
		3.2.1.7.1.4.s	When DP' is active on the Q-channel only, DB may be on the I channel.	Yes	
		3.2.1.7.1.4.u	The TDRSS SSA HGA service shall support a 16 kbps I channel return link for housekeeping or diagnostic/dump telemetry and 256 kbps Q channel return link for housekeeping playback only.	Yes	
		3.2.1.7.1.4.v	The TDSRSS SSA Omni service shall support a 1 kbps Q channel. Health/Safety telemetry or Diagnostic/Dump for contingency.	Yes	
		3.2.1.7.1.4.w	The TDRSS SMA HGA service shall support a 16 kbps Q channel houskeeping telemetry.	Yes	
		3.2.1.7.1.4.x	The hardline umbilical service shall support a 16 kbps I and Q channel return link for pre-launch housekeeping and diagnostic/dump telemetry to GSE.	Yes	

CEI Compliance to RD

RD Rqmt #	RD Requirement Text	CEI Rqmt #	CEI Rqmt Text	Comply	Compliance Comments
		3.2.1.7.1.4.y	The hardline umbilical service shall support a 1 kbps I and Q channel return link for Launch/Ascent Health and Safety telemetry to Launch Vehicle.	Yes	
		3.2.1.7.1.4.y	The GN S-band Omni emergency link service shall support a 16 kbps data rate on the I channel for Housekeeping or Diagnostic/Dump data and a 512 kbps data rate on the Q channel for Housekeeping playback only.	Yes	
		3.2.1.7.1.4.z	The Gn S-Band Omni Service shall support an emergency 1 kbps Q&I channel return link for Health/Safety telemetry.	Yes	
3.2.2.5.2	Functional Requirements				
3.2.2.5.2.1	General				
3.2.2.5.2.1.a	The spacecraft shall have the capability of communicating with the other space and ground elements shown in Figure 2.	3.1.5.3.1.a	Spacecraft interfaces to the TDRSS shall comply with the Space Network (SN) User's Guide, NASA STDN 101.2.	Yes	
		3.1.5.3.2.a	Spacecraft interfaces to the TDRSS shall conform to the RF ICD between the EOS AM Spacecraft and the Spaceflight Tracking and Data Network, IS20008504.	Yes	

CEI Compliance to RD

RD Rqmt #	RD Requirement Text	CEI Rqmt #	CEI Rqmt Text	Comply	Compliance Comments
		3.1.5.4.a	The Spacecraft shall interface with the EOSDIS via the NASA GN. Interfaces which are compatible with GN may be assumed to be compatible with the Deep Space Network (DSN) and the Wallops Tracking Station (WTS).	Yes	
		3.1.5.4.b	Spacecraft interfaces to the GN shall meet the requirements of IS20008504.	Yes	
		3.1.5.5.a	The Spacecraft shall transfer data to DAS users via X-band links.	Yes	
		3.1.5.6.b	Ascent telemetry shall be provided to the Launch Vehicle Interface.	Yes	
3.2.2.5.2.1.b	Command reception capability shall be available at all times.	3.7.1.5.5.a	The COMS shall support communications via the contingency and emergency links in all Spacecraft Modes during all Mission Phases following launch vehicle separation, in accordance with the antenna coverage requirements of Section 3.21.7.	Yes	
		3.7.1.5.5.c	The COMS shall be able to accept ground commands immediately upon separation from the launch vehicle.	Yes	

CEI Compliance to RD

RD Rqmt #	RD Requirement Text	CEI Rqmt #	CEI Rqmt Text	Comply	Compliance Comments
		3.7.1.5.5.d	COMS equipment associated with contingency communications forward (command) links shall at all times and after all single failures be capable of accepting commands.	Yes	
		3.7.1.5.5.e	It shall not be possible to command the COMS into a state which compromises this capability.	Yes	
3.2.2.5.2.1.c	Commands shall be received and processed through the S-band links.	3.2.1.7.1.4.b	The TDRSS SSA HGA service shall support a 10 kbps forward link for Normal High Rate Commanding.	Yes	
		3.2.1.7.1.4.c	The TDRSS SMA HGA service shall support a 1 kbps forward link for Normal Low Rate Commanding.	Yes	
		3.2.1.7.1.4.d	The TDRSS SSA Omni service shall support a 125 kbps forward link for Contingency Commanding.	Yes	
3.2.2.5.2.1.d	During launch phases, the command path shall be through the SSA link or through the launch vehicle umbilical.	3.2.1.7.1.4.a	The Spacecraft Bus shall be capable of transmitting and receiving data in accordance with the rates (which include all CCSDS overhead) shown in Tables V and VI. The Spacecraft Bus shall be capable of transmitting the data shown in the Table VI Usage column over the link specified by the associated Data Rate, Path, and Return Link Service Columns.	Yes	

CEI Compliance to RD

RD Rqmt #	RD Requirement Text	CEI Rqmt #	CEI Rqmt Text	Comply	Compliance Comments
		3.2.1.7.1.4.c	The TDRSS SMA HGA service shall support a 1 kbps forward link for Normal Low Rate Commanding.	Yes	
		3.2.1.7.1.4.d	The TDRSS SSA Omni service shall support a 125 kbps forward link for Contingency Commanding.	Yes	
		3.2.1.7.1.4.e	The GN S-band Omni service shall support a 2 kbps forward link for emergency commanding.	Yes	
		3.2.1.7.1.4.f	The hardline umbilical service shall support a 2 kbps forward link for pre-launch GSE commands.	Yes	
3.2.2.5.2.1.e	The spacecraft shall interface to the launch vehicle umbilical to provide connectivity for spacecraft telemetry and commands and intrument engineering telemetry and commands.	3.1.5.6.b	Ascent telemetry shall be provided to the Launch Vehicle Interface.	Yes	
		3.2.1.7.1.4.a	The Spacecraft Bus shall be capable of transmitting and receiving data in accordance with the rates (which include all CCSDS overhead) shown in Tables V and VI. The Spacecraft Bus shall be capable of transmitting the data shown in the Table VI Usage column over the link specified by the associated Data Rate, Path, and Return Link Service Columns.	Yes	
		3.2.1.7.1.4.f	The hardline umbilical service shall support a 2 kbps forward link for pre-launch GSE commands.	Yes	

CEI Compliance to RD

RD Rqmt #	RD Requirement Text	CEI Rqmt #	CEI Rqmt Text	Comply	Compliance Comments
		3.2.1.7.1.4.r	DAS DP' shall not be simultaneous with DP or DDL.	Yes	
		3.2.1.7.1.4.x	The hardline umbilical service shall support a 16 kbps I and Q channel return link for pre-launch housekeeping and diagnostic/dump telemetry to GSE.	Yes	
		3.2.1.7.1.4.y	The hardline umbilical service shall support a 1 kbps I and Q channel return link for Launch/Ascent Health and Safety telemetry to Launch Vehicle.	Yes	
3.2.2.5.2.1.f	The spacecraft shall provide for an S-band GN/DSN/WTS downlink or TDRSS return link with adequate frequency stability to permit one-way doppler tracking on the ground without carrier frequency modeling.	3.2.1.4.2.2.a	The Spacecraft Bus shall transmit an S-band carrier for one-way Doppler tracking via TDRSS or GN without carrier frequency modelling, on the Doppler tracking links identified in Table IV	Yes	
3.2.2.5.2.2	TDRSS Communications				

CEI Compliance to RD

RD Rqmt #	RD Requirement Text	CEI Rqmt #	CEI Rqmt Text	Comply	Compliance Comments
3.2.2.5.2.2.a	Primary communications between the ground and the spacecraft shall be through TDRSS.	3.2.1.7.1.3.a	The Spacecraft Bus shall be capable of supporting all Science Mode mission operations with no more than 20 minutes per orbit of TDRSS single access service, Scheduled as necessary to meet the navigation requirements of the Spacecraft, and to satisfy any additional command and telemetry contact needs during non-nominal operations. Multiple Access and Single Access contacts will be scheduled as necessary to meet the navigation requirements of the Spacecraft, and to satisfy any additional command and telemetry contact needs during non-nominal operations.	Yes	
3.2.2.5.2.2.b	The spacecraft shall be capable of normal operations using the TDRSS K-Band Single Access (KSA) return service and the S-Band Single Access (SSA) or S-Band Multiple Access (SMA) forward and return services.	3.2.1.7.1.4.b	The TDRSS SSA HGA service shall support a 10 kbps forward link for Normal High Rate Commanding.	Yes	
		3.2.1.7.1.4.c	The TDRSS SMA HGA service shall support a 1 kbps forward link for Normal Low Rate Commanding.	Yes	
		3.2.1.7.1.4.g	The TDRSS KSA HGA service shall support a 75 kbps return link on both I and Q channels for real-time or playback of science data.	Yes	

CEI Compliance to RD

RD Rqmt #	RD Requirement Text	CEI Rqmt #	CEI Rqmt Text	Comply	Compliance Comments
		3.2.1.7.1.5.a	The Spacecraft Bus design shall allow the simultaneous downlink use of the K-band Single Access (KSA) service and either S-band Single Access (SSA) or S-band Multiple Access (SMA) service.	Yes	
3.2.2.5.2.2.c	The spacecraft design shall allow the simultaneous downlink use of the KSA service and either SSA or SMA service.	3.2.1.7.1.5.a	The Spacecraft Bus design shall allow the simultaneous downlink use of the K-band Single Access (KSA) service and either S-band Single Access (SSA) or S-band Multiple Access (SMA) service.	Yes	
3.2.2.5.2.2.d	The TDRSS SSA services shall be used for contingency operations.	3.2.1.7.1.4.d	The TDRSS SSA Omni service shall support a 125 kbps forward link for Contingency Commanding.	Yes	
3.2.2.5.2.2.e	The spacecraft shall extract Doppler data from TDRSS signals and process these signals to determine spacecraft position and velocity vectors.	3.2.1.4.1.a	The Spacecraft Bus shall be capable of determining Spacecraft position and velocity vectors by processing Doppler data extracted from signals from TDRSS satellites. This is known as the TDRSS On-board Navigation System (TONS).	Yes	
3.2.2.5.2.2.f	The spacecraft shall support the TDRSS S-Band range and Doppler tracking mode.	3.2.1.4.b	All navigation and tracking services shall be communicated via the links shown in Table IV.	Yes	

CEI Compliance to RD

RD Rqmt #	RD Requirement Text	CEI Rqmt #	CEI Rqmt Text	Comply	Compliance Comments
		3.2.1.4.2.1.a	The Spacecraft Bus shall time synchronize the TDRSS return link ranging channel PN code with the TDRSS forward link ranging channel PN code for TDRSS ranging links identified in Table IV.	Yes	
		3.2.1.4.2.2.a	The Spacecraft Bus shall transmit an S-band carrier for one-way Doppler tracking via TDRSS or GN without carrier frequency modelling, on the Doppler tracking links identified in Table IV	Yes	
3.2.2.5.2.2.g	The spacecraft shall monitor and control the High Gain Antenna (HGA) in response to objectives set by ground command.	3.2.1.7.1.9.a	The Spacecraft Bus shall maintain ephemeris data for up to four TDRS spacecraft, and shall autonomously, track selected TDSR spacecraft with the HGA as selected by ground command.	Yes	
3.2.2.5.2.2.h	Provision shall be made for direct ground control of HGA pointing during early-orbit operations and as needed during mission operations to re-establish the TDRSS high rate link.	3.7.1.5.7.a	The COMS shall point the HGA in response to the latest azimuth and elevation rate command data received via the C&DH subsystem and shall return azimuth and elevation status via C&DHS.	Yes	
3.2.2.5.2.3	GN/DSN/WTS Communications				

CEI Compliance to RD

RD Rqmt #	RD Requirement Text	CEI Rqmt #	CEI Rqmt Text	Comply	Compliance Comments
3.2.2.5.2.3.a	The GN/DSN/WTS S-Band services shall be used for emergency operations.	3.1.5.4.a	The Spacecraft shall interface with the EOSDIS via the NASA GN. Interfaces which are compatible with GN may be assumed to be compatible with the Deep Space Network (DSN) and the Wallops Tracking Station (WTS).	Yes	
		3.2.1.7.1.4.e	The GN S-band Omni service shall support a 2 kbps forward link for emergency commanding.	Yes	
		3.2.1.7.1.4.z	The Gn S-Band Omni Service shall support an emergency 1 kbps Q&I channel return link for Health/Safety telemetry.	Yes	
		3.2.1.7.4.1.a	The Spacecraft Bus shall be capable of emergency command and telemetry communications with the Ground Network (GN).	Yes	
3.2.2.5.2.3.b	The spacecraft shall support a backup direct uplink and downlink through GN/DSN/WTS in the event of TDRSS link unavailability.	3.2.1.7.1.4.a	The Spacecraft Bus shall be capable of transmitting and receiving data in accordance with the rates (which include all CCSDS overhead) shown in Tables V and VI. The Spacecraft Bus shall be capable of transmitting the data shown in the Table VI Usage column over the link specified by the associated Data Rate, Path, and Return Link Service Columns.	Yes	

CEI Compliance to RD

RD Rqmt #	RD Requirement Text	CEI Rqmt #	CEI Rqmt Text	Comply	Compliance Comments
		3.2.1.7.1.4.e	The GN S-band Omni service shall support a 2 kbps forward link for emergency commanding.	Yes	
		3.2.1.7.1.4.z	The Gn S-Band Omni Service shall support an emergency 1 kbps Q&I channel return link for Health/Safety telemetry.	Yes	
		3.2.1.7.4.1.a	The Spacecraft Bus shall be capable of emergency command and telemetry communications with the Ground Network (GN).	Yes	
3.2.2.5.2.4	Direct Access Service (DAS)				
3.2.2.5.2.4.a	a) The spacecraft shall provide a Direct Access Service (DAS), which shall include Direct Broadcast (DB), Direct Downlink (DDL), and Direct Playback (DP) capabilities for the instruments as shown in Table II.	3.2.1.7.5.a	The Spacecraft Bus shall provide a Direct Access Service (DAS), including a direct downlink (DDL), broadcast (DB), and playback (DP) capability for the Instruments as shown in Table VII.	Yes	
3.2.2.5.2.4.b	The service shall not rely on HGA operability.	3.2.1.7.5.b	These services shall not rely on HGA operability.	Yes	
3.2.2.5.2.4.c	Aster data shall be included in the DP and DDL services.	3.2.1.7.5.6.1.a	The Spacecraft Bus shall accept DDL data from the selected Instruments via the same data transmission path as is used for Instrument science data.	Yes	

CEI Compliance to RD

RD Rqmt #	RD Requirement Text	CEI Rqmt #	CEI Rqmt Text	Comply	Compliance Comments
		3.2.1.7.5.7.1.a	The Spacecraft Bus shall, on command, play back recorded science and housekeeping data at a rate, commensurate with the maximum DP link rate specified in Table VI.	Yes	
3.2.2.5.2.4.d	CERES data shall be included in the DP service.	3.2.1.7.5.7.1.a	The Spacecraft Bus shall, on command, play back recorded science and housekeeping data at a rate, commensurate with the maximum DP link rate specified in Table VI.	Yes	
3.2.2.5.2.4.e	MISR data shall be included in the DP service.	3.2.1.7.5.7.1.a	The Spacecraft Bus shall, on command, play back recorded science and housekeeping data at a rate, commensurate with the maximum DP link rate specified in Table VI.	Yes	
3.2.2.5.2.4.f	MOPITT data shall be included in the DP service.	3.2.1.7.5.7.1.a	The Spacecraft Bus shall, on command, play back recorded science and housekeeping data at a rate, commensurate with the maximum DP link rate specified in Table VI.	Yes	
3.2.2.5.2.4.g	MODIS data shall be included in the DB and DP services.	3.2.1.7.5.5.1.a	The Spacecraft Bus shall accept DB data from the selected Instruments via the same data transmission path as is used for Instrument science data.	Yes	

CEI Compliance to RD

RD Rqmt #	RD Requirement Text	CEI Rqmt #	CEI Rqmt Text	Comply	Compliance Comments
		3.2.1.7.5.7.1.a	The Spacecraft Bus shall, on command, play back recorded science and housekeeping data at a rate, commensurate with the maximum DP link rate specified in Table VI.	Yes	
3.2.2.5.2.4.h	Ancillary Data shall be included in the DB and DP services.	3.2.1.7.5.5.1.a	The Spacecraft Bus shall accept DB data from the selected Instruments via the same data transmission path as is used for Instrument science data.	Yes	
		3.2.1.7.5.7.1.a	The Spacecraft Bus shall, on command, play back recorded science and housekeeping data at a rate, commensurate with the maximum DP link rate specified in Table VI.	Yes	
3.2.2.5.2.4.i	b) When operating in science mode, the spacecraft shall accommodate the commanded selection of each of the following DAS modes at any duty cycle, when measured over one orbit, up to 100%:	3.2.1.7.5.1.a	During science operations, the spacecraft shall accommodate the commanded selection of each of the DAS modes represented in Table V, at any duty cycle, when measured over one orbit, up to 100 percent:	Yes	

CEI Compliance to RD

RD Rqmt #	RD Requirement Text	CEI Rqmt #	CEI Rqmt Text	Comply	Compliance Comments
3.2.2.5.2.4.j	(1) DDL, DB, and DP OFF;	3.2.1.7.5.1.a	During science operations, the spacecraft shall accommodate the commanded selection of each of the DAS modes represented in Table V, at any duty cycle, when measured over one orbit, up to 100 percent:	Yes	
3.2.2.5.2.4.k	(2) DB only;	3.2.1.7.1.4.i	Real-time DB shall not be simultaneous with DP. It shall be on the I-channel only if DDL or DP' is active, otherwise the same data shall be I and Q channels.	Yes	
3.2.2.5.2.4.l	(3) DB and DDL only; and	3.2.1.7.1.4.i	Real-time DB shall not be simultaneous with DP. It shall be on the I-channel only if DDL or DP' is active, otherwise the same data shall be I and Q channels.	Yes	
		3.2.1.7.1.4.l	DAS DDL shall not be simultaneous with DP or DP'.	Yes	
		3.2.1.7.1.4.s	When DP' is active on the Q-channel only, DB may be on the I channel.	Yes	
		3.2.1.7.1.4.y	The GN S-band Omni emergency link service shall support a 16 kbps data rate on the I channel for Housekeeping or Diagnostic/Dump data and a 512 kbps data rate on the Q channel for Housekeeping playback only.	Yes	

CEI Compliance to RD

RD Rqmt #	RD Requirement Text	CEI Rqmt #	CEI Rqmt Text	Comply	Compliance Comments
3.2.2.5.2.4.m	(4) DP only.	3.2.1.7.1.4.o	The DAS system shall support DP only. DAS DP shall not be simultaneous with DB, DP', OR DDL.	Yes	
		3.2.1.7.1.4.s	When DP' is active on the Q-channel only, DB may be on the I channel.	Yes	
		3.2.1.7.1.4.y	The GN S-band Omni emergency link service shall support a 16 kbps data rate on the I channel for Housekeeping or Diagnostic/Dump data and a 512 kbps data rate on the Q channel for Housekeeping playback only.	Yes	
3.2.2.5.2.4.n	c) The DAS modes are mutually exclusive.				
3.2.2.5.2.4.o	The DB, DDL, and DP services may be interrupted momentarily during mode transitions.	3.2.1.7.5.1.b	The duration of any interruption in DB service during transitions between modes shall not exceed 5 sec.	Yes	
3.2.2.5.2.4.p	d) The spacecraft shall transmit the DAS data streams in real-time via X-band downlink	3.2.1.7.1.4.h	DB (X-Band) DAS service shall support a 12.5 Mbps return link on both I and Q channels for real-time direct broadcast of low-rate science data.	Yes	

CEI Compliance to RD

RD Rqmt #	RD Requirement Text	CEI Rqmt #	CEI Rqmt Text	Comply	Compliance Comments
		3.2.1.7.1.4.j	The DAS DDL service shall support a 12.5 Mbps return link on the I channel and 105 kbps return link on the Q channel for real-time direct downlink of high-rate science data.	Yes	
		3.2.1.7.1.4.k	When the DAS DDL service is active, DB low-rate science data shall be on the I channel with the DDL high-rate data on the Q channel.	Yes	
3.2.2.5.2.4.q	e) The spacecraft shall provide the following Effective Isotropic Radiated Power (EIRP) levels at the indicated ground elevation angles. (NOTE: This will provide a 0 dB link margin at each elevation angle under the following conditions: BER of 10-5, 3m class ground antenna, and 4mm/hr rain rate.)	3.2.1.7.5.8.a	The Spacecraft Bus shall transmit the DAS data such that, in the direction of a ground antenna with the given elevation angle, the following Effective Isotripically-Radiated Power (EIRP) is acheived:	Yes	
3.2.2.5.2.4.r	Elevation Angle 5 degress, EIRP (dBW) 13.6.	3.2.1.7.5.8.b	Elevation (deg) = 5; EIRP (dBW) = 13.6	Yes	
3.2.2.5.2.4.s	Elevation Angle 40 degress, EIRP (dBW) 1.5.	3.2.1.7.5.8.c	Elevation (deg) = 40; EIRP (dBW) = 1.5	Yes	
3.2.2.5.2.4.t	Elevation Angle 70 degress, EIRP (dBW) -2.6.	3.2.1.7.5.8.d	Elevation (deg) = 70; EIRP (dBW) = -2.6	Yes	

CEI Compliance to RD

RD Rqmt #	RD Requirement Text	CEI Rqmt #	CEI Rqmt Text	Comply	Compliance Comments
3.2.2.5.2.4.u	Elevation Angle 90 degress, EIRP (dBW) -3.9.	3.2.1.7.5.8.e	Elevation (deg) = 90; EIRP (dBW) = -3.9	Yes	
3.2.2.5.2.4.v	f) The spacecraft shall provide the DB service whenever the "DB only" or "DB and DDL only" mode is selected.	3.2.1.7.5.1.a	During science operations, the spacecraft shall accommodate the commanded selection of each of the DAS modes represented in Table V, at any duty cycle, when measured over one orbit, up to 100 percent:	Yes	
3.2.2.5.2.4.w	g) The spacecraft shall provide the DDL service whenever the "DB and DDL only" mode is selected.	3.2.1.7.5.1.a	During science operations, the spacecraft shall accommodate the commanded selection of each of the DAS modes represented in Table V, at any duty cycle, when measured over one orbit, up to 100 percent:	Yes	
		3.2.1.7.5.6.a	The Spacecraft Bus shall provide the DDL service whenever the "DB and DDL only" mode is selected.	Yes	
3.2.2.5.2.4.x	h) The spacecraft shall provide the DP service whenever the "DP only" mode is selected.	3.2.1.7.5.1.a	During science operations, the spacecraft shall accommodate the commanded selection of each of the DAS modes represented in Table V, at any duty cycle, when measured over one orbit, up to 100 percent:	Yes	

CEI Compliance to RD

RD Rqmt #	RD Requirement Text	CEI Rqmt #	CEI Rqmt Text	Comply	Compliance Comments
3.2.2.5.2.4.y	i) The DP service is not required to be available simultaneously with the TDRSS K-band return link service.				
3.2.2.5.3	Performance Requirements				
3.2.2.5.3.1	General				
3.2.2.5.3.1.a	The spacecraft shall be capable of transmitting and receiving data in accordance with Tables III and IV.	3.2.1.7.1.4.a	The Spacecraft Bus shall be capable of transmitting and receiving data in accordance with the rates (which include all CCSDS overhead) shown in Tables V and VI. The Spacecraft Bus shall be capable of transmitting the data shown in the Table VI Usage column over the link specified by the associated Data Rate, Path, and Return Link Service Columns.	Yes	
3.2.2.5.3.1.b	Note that the transmission rates include all overhead (e.g., packetizing, encoding, framing, etc.).				
3.2.2.5.3.1.c	The spacecraft shall be capable of supporting navigation via links as shown in Table V.	3.2.1.4.b	All navigation and tracking services shall be communicated via the links shown in Table IV.	Yes	
		3.2.1.7.1.4.c	The TDRSS SMA HGA service shall support a 1 kbps forward link for Normal Low Rate Commanding.	Yes	

CEI Compliance to RD

RD Rqmt #	RD Requirement Text	CEI Rqmt #	CEI Rqmt Text	Comply	Compliance Comments
3.2.2.5.3.1.d	The characterisitics of radio communications with TDRSS shall conform to the Space Network (SN) User's Guide (STDN 101.2).	3.1.5.3.1.a	Spacecraft interfaces to the TDRSS shall comply with the Space Network (SN) User's Guide, NASA STDN 101.2.	Yes	
3.2.2.5.3.1.e	Values of specific selectable parameters (such as PN codes, radio frequencies, PCM codes, modulation modes, etc.) shall be defined in the EOS-AM Spacecraft-to-TDRSS ICD.	3.1.5.3.2.a	Spacecraft interfaces to the TDRSS shall conform to the RF ICD between the EOS AM Spacecraft and the Spaceflight Tracking and Data Network, IS20008504.	Yes	
3.2.2.5.3.1.f	The TDRSS SSA HGA service shall support a 10 kbps forward link for normal commanding.	3.2.1.7.1.4.b	The TDRSS SSA HGA service shall support a 10 kbps forward link for Normal High Rate Commanding.	Yes	
3.2.2.5.3.1.g	The TDRSS SMA HGA service shall support a 1 kbps forward link for normal commanding.	3.2.1.7.1.4.c	The TDRSS SMA HGA service shall support a 1 kbps forward link for Normal Low Rate Commanding.	Yes	
3.2.2.5.3.1.h	The TDRSS SSA Omni service shall support a 125 kbps forward link for contingency commanding.	3.2.1.7.1.4.d	The TDRSS SSA Omni service shall support a 125 kbps forward link for Contingency Commanding.	Yes	
3.2.2.5.3.1.i	The GN/DSN/WTS S-band Omni service shall support a 2 kbps forward link for emergency commanding.	3.2.1.7.1.4.e	The GN S-band Omni service shall support a 2 kbps forward link for emergency commanding.	Yes	
3.2.2.5.3.1.j	The hardline umbilical service shall support a 2 kbps forward link for pre-launch GSE commands.	3.2.1.7.1.4.f	The hardline umbilical service shall support a 2 kbps forward link for pre-launch GSE commands.	Yes	

CEI Compliance to RD

RD Rqmt #	RD Requirement Text	CEI Rqmt #	CEI Rqmt Text	Comply	Compliance Comments
3.2.2.5.3.1.k	The TDRSS KSA HGA service shall support a 75 kbps return link on both I and Q channels for real-time or playback of science data.	3.2.1.7.1.4.g	The TDRSS KSA HGA service shall support a 75 kbps return link on both I and Q channels for real-time or playback of science data.	Yes	
3.2.2.5.3.1.l	The DAS DB earth coverage service shall support a 15 kbps return link on both I and Q channels for direct broadcast of science data.	3.2.1.7.1.4.h	DB (X-Band) DAS service shall support a 12.5 Mbps return link on both I and Q channels for real-time direct broadcast of low-rate science data.	Yes	
3.2.2.5.3.1.m	The DAS DDL earth coverage service shall support a 105 kbps return link on the Q channel for direct downlink of science data.	3.2.1.7.1.4.j	The DAS DDL service shall support a 12.5 Mbps return link on the I channel and 105 kbps return link on the Q channel for real-time direct downlink of high-rate science data.	Yes	
3.2.2.5.3.1.n	When the DAS DDL and DB services are active DB low-rate science data shall be transmitted on the I channel with the DDL high-rate data on the Q channel.	3.2.1.7.1.4.k	When the DAS DDL service is active, DB low-rate science data shall be on the I channel with the DDL high-rate data on the Q channel.	Yes	
3.2.2.5.3.1.o	The DAS DP earth coverage service shall support a 75 kbps return link on both I and Q channels for playback of the science data recorders to provide a backup to the TDRSS KSA science data downlink.	3.2.1.7.1.4.m	The DAS DP earth coverage service shall support a 75 kbps return link on both I and Q channels for playback of the science data records to provide a backup to the TDRSS KSA science data downlink.	Yes	

CEI Compliance to RD

RD Rqmt #	RD Requirement Text	CEI Rqmt #	CEI Rqmt Text	Comply	Compliance Comments
3.2.2.5.3.1.p	The TDRSS SSA HGA service shall support a 16 kbps I channel return link for health and safety telmetry and a 256 kpbs Q channel return link for diagnostic and memory dump telemetry.	3.2.1.7.1.4.u	The TDRSS SSA HGA service shall support a 16 kbps I channel return link for housekeeping or diagnostic/dump telemetry and 256 kbps Q channel return link for housekeeping playback only.	Yes	
3.2.2.5.3.1.q	The TDRSS SSA Omni service shall support a 1 kbps Q channel return link for contingency critical health and safety telmetry or diagnostic telmetry.	3.2.1.7.1.4.v	The TDSRSS SSA Omni service shall support a 1 kbps Q channel. Health/Safety telemetry or Diagnostic/Dump for contingency.	Yes	
3.2.2.5.3.1.r	The TDRSS SMA HGA service shall support a 16 kbps Q channel return link for health and safety telmetry.	3.2.1.7.1.4.w	The TDRSS SMA HGA service shall support a 16 kbps Q channel houskeeping telemetry.	Yes	
3.2.2.5.3.1.s	The GN/DSN/WTS S-band Omni service shall support a 16 kbps I channel return link for emergency critical health and safety telmetry and a 512 kbps Q channel return link for diagnostic and memory dump telemetry.	3.2.1.3.2.2.4.a	The Spacecraft Bus shall be capable of simultaneous transmission of real-time and recorded telemetry data via the GN link.	Yes	
3.2.2.5.3.1.t	The hardline umbilical service shall support a 16 kbps I and Q channel return link for health and safety telmetry.	3.2.1.7.1.4.r	DAS DP' shall not be simultaneous with DP or DDL.	Yes	

CEI Compliance to RD

RD Rqmt #	RD Requirement Text	CEI Rqmt #	CEI Rqmt Text	Comply	Compliance Comments
3.2.2.5.3.1.u	The hardline launch vehicle antenna service shall support a 1 kbps I and Q channel return link for health and safety telmetry.	3.2.1.7.1.4.r	DAS DP' shall not be simultaneous with DP or DDL.	Yes	
3.2.2.5.3.1.v	The spacecraft shall be capable of supporting navigation via links as described below.	3.2.1.4.b	All navigation and tracking services shall be communicated via the links shown in Table IV.	Yes	
3.2.2.5.3.1.w	The TONS on-board navigation and tracking service shall be supported on the TDRSS SSA HGA forward link, the TDRSS SMA HGA forward link, and the TDRSS SSA Omni forward link.	3.2.1.4.b	All navigation and tracking services shall be communicated via the links shown in Table IV.	Yes	
3.2.2.5.3.1.x	The TDRSS ranging navigation and tracking service shall be supported on the TDRSS SSA HGA forward and return links, the TDRSS SMA HGA forward and return links, and the TDRSS SSA Omni forward and return links.	3.2.1.4.b	All navigation and tracking services shall be communicated via the links shown in Table IV.	Yes	
3.2.2.5.3.1.y	The TDRSS doppler tracking navigation and tracking service shall be supported on the TDRSS SSA HGA return link, the TDRSS SMA HGA return link, and the TDRSS SSA Omni return link.	3.2.1.4.b	All navigation and tracking services shall be communicated via the links shown in Table IV.	Yes	

CEI Compliance to RD

RD Rqmt #	RD Requirement Text	CEI Rqmt #	CEI Rqmt Text	Comply	Compliance Comments
3.2.2.5.3.1.z	The DSN doppler tracking navigation and tracking service shall be supported on the DSN S-band Omni return link.	3.2.1.4.b	All navigation and tracking services shall be communicated via the links shown in Table IV.	Yes	
3.2.2.5.3.1.aa	The characteristics of radio communications with TDRSS shall conform to the Space Network (SN) User's Guide (STDN 101.2).	3.1.5.3.1.a	Spacecraft interfaces to the TDRSS shall comply with the Space Network (SN) User's Guide, NASA STDN 101.2.	Yes	
3.2.2.5.3.1.ab	Values of specific selectable parameters (such as PN codes, radio frequencies, PCM codes, modulation modes, etc.) shall be defined in the spacecraft-to-TDRSS ICD.	3.1.5.3.2.a	Spacecraft interfaces to the TDRSS shall conform to the RF ICD between the EOS AM Spacecraft and the Spaceflight Tracking and Data Network, IS20008504.	Yes	
3.2.2.5.3.2	TDRSS Service				

CEI Compliance to RD

RD Rqmt #	RD Requirement Text	CEI Rqmt #	CEI Rqmt Text	Comply	Compliance Comments
3.2.2.5.3.2.a	Spacecraft communication links shall provide transmissions of command data, computer data, real time and playback telemetry data, and tracking data, in combinations to permit mission operations to be performed during scheduled TDRSS single access support periods.	3.2.1.7.1.3.a	The Spacecraft Bus shall be capable of supporting all Science Mode mission operations with no more than 20 minutes per orbit of TDRSS single access service, Scheduled as necessary to meet the navigation requirements of the Spacecraft, and to satisfy any additional command and telemetry contact needs during non-nominal operations. Multiple Access and Single Access contacts will be scheduled as necessary to meet the navigation requirements of the Spacecraft, and to satisfy any additional command and telemetry contact needs during non-nominal operations.	Yes	
3.2.2.5.3.3	Contingency/Emergency Communications				
3.2.2.5.3.3.a	Provisions shall be made for a command and telemetry link via TDRSS and GN/DSN/WTS (but not simultaneously) in the event that the primary Communication links fail.	3.2.1.7.4.1.a	The Spacecraft Bus shall be capable of emergency command and telemetry communications with the Ground Network (GN).	Yes	
		3.2.1.7.4.2.a	Spacecraft Bus emergency communications via GN shall not occur and will not be attempted simultaneously with contingency communications via TDRSS.	Yes	

CEI Compliance to RD

RD Rqmt #	RD Requirement Text	CEI Rqmt #	CEI Rqmt Text	Comply	Compliance Comments
3.2.2.5.3.3.b	Provision shall be made for contingency command and telemetry communications using spacecraft omnidirectional antennas and the TDRSS SSA service.	3.2.1.7.1.4.d	The TDRSS SSA Omni service shall support a 125 kbps forward link for Contingency Commanding.	Yes	
		3.2.1.7.1.4.v	The TDSRSS SSA Omni service shall support a 1 kbps Q channel. Health/Safety telemetry or Diagnostic/Dump for contingency.	Yes	
3.2.2.5.3.3.c	The link shall be adequate for acquisition of spacecraft data needed to determine the causes of anomalies and adequate for commanding reconfigurations needed to return to normal communications.	3.2.1.3.2.1.2.a	Spacecraft Health and Safety telemetry shall contain data indicative of the current status of on-board subsystems and Instruments.	Yes	
		3.7.1.1.8.2.2.a	The health and safety telemetry provided by each subsystem in all Spacecraft modes shall be sufficient to support all operations.	Yes	
		3.7.1.1.8.2.2.b	These data shall indicate the current status of the subsystem, and shall allow assessment and monitoring of the subsystem.	Yes	
		3.7.1.1.8.2.2.c	Subsystem and component failures which threaten Spacecraft survival shall be detectable in health and safety telemetry.	Yes	

CEI Compliance to RD

RD Rqmt #	RD Requirement Text	CEI Rqmt #	CEI Rqmt Text	Comply	Compliance Comments
		3.7.1.1.8.2.4.a	The housekeeping telemetry provided by each subsystem shall allow ground controllers to assess the operational state of the subsystem, monitor critical subsystem function, and aid in fault detection and correction.	Yes	
		3.7.1.1.8.2.4.b	Subsystem Housekeeping telemetry shall, as a minimum, contain the following: (a) Redundancy status of the subsystem and components; (b) Health and safety status data; (c) Indications of resource usage; (d) Indications of sensed failures or anomalies, if any; (e) Data suitable for verifying execution of each Spacecraft command; (f) Notification of all autonomous switching between redundant paths.	Yes	
		3.7.1.5.5.d	COMS equipment associated with contingency communications forward (command) links shall at all times and after all single failures be capable of accepting commands.	Yes	

CEI Compliance to RD

RD Rqmt #	RD Requirement Text	CEI Rqmt #	CEI Rqmt Text	Comply	Compliance Comments
		3.7.1.6.9.a	The C&DHS shall at all times and after all single failures be capable of accepting from the COMS and executing those commands needed to reconfigure on-board subsystems to restore normal operations. Command errors shall be incapable of compromising this capability.	Yes	
3.2.2.5.3.3.d	Provisions shall be made for emergency command and telemetry communications using GN/DSN/WTS services in the event that TDRSS services cannot be used.	3.1.5.4.a	The Spacecraft shall interface with the EOSDIS via the NASA GN. Interfaces which are compatible with GN may be assumed to be compatible with the Deep Space Network (DSN) and the Wallops Tracking Station (WTS).	Yes	
		3.2.1.7.1.4.e	The GN S-band Omni service shall support a 2 kbps forward link for emergency commanding.	Yes	
		3.2.1.7.1.4.z	The Gn S-Band Omni Service shall support an emergency 1 kbps Q&I channel return link for Health/Safety telemetry.	Yes	
		3.2.1.7.4.1.a	The Spacecraft Bus shall be capable of emergency command and telemetry communications with the Ground Network (GN).	Yes	

CEI Compliance to RD

RD Rqmt #	RD Requirement Text	CEI Rqmt #	CEI Rqmt Text	Comply	Compliance Comments
3.2.2.6	Guidance, Navigation, and Control (GN&C)				
3.2.2.6.1	General Description				
3.2.2.6.1.a	The spacecraft shall provide for attitude control and orbit maneuvers to accommodate EOS-AM instrument requirements.	3.2.1.5.1.1.a	The Spacecraft Bus shall be capable, through ground-commanded propulsive maneuvers, of acquiring the Operational Phase orbit when injected by the launch vehicle into the following nominal orbit:	Yes	
		3.2.1.5.1.1.b	Perigee Radius 6927 km +5/-0 km	Yes	
		3.2.1.5.1.1.c	Apogee Radius 7075km +0/10 km	Yes	
		3.2.1.5.1.1.d	Inclination 98.2 deg +/- O.1 deg (TBR-4)	Yes	
		3.2.1.5.1.1.e	Argument of Perigee 168 deg (TBR-4)	Yes	
		3.2.1.5.1.1.f	Descending Node 10:15 - 10:45 AM (local mean solar time)	Yes	

CEI Compliance to RD

RD Rqmt #	RD Requirement Text	CEI Rqmt #	CEI Rqmt Text	Comply	Compliance Comments
		3.2.1.5.2.1.a	The Spacecraft Bus shall be capable, through ground-commanded propulsive maneuvers, of maintaining a nominal Operational Phase orbit which is near circular and sun-synchronous with the following characteristics:	Yes	
		3.2.1.5.2.1.b	Equatorial Altitude 705 +/-5 km	Yes	
		3.2.1.5.2.1.c	Semi-Major Axis: 7078 +/-5 km (mean)	Yes	
		3.2.1.5.2.1.d	Inclination: 98.2 degrees + /-0.15 degrees	Yes	
		3.2.1.5.2.1.e	Eccentricity .0012 +/-0.0004	Yes	
		3.2.1.5.2.1.f	Argument of Perigee 90 +/-20 degrees	Yes	
		3.2.1.5.2.1.g	Descending Node 10:30 am +/-15 min (local mean solar time)	Yes	
		3.7.1.4.2.a	The GN&CS shall utilize reaction-wheel assemblies (RWAs) for primary attitude control.	Yes	

CEI Compliance to RD

RD Rqmt #	RD Requirement Text	CEI Rqmt #	CEI Rqmt Text	Comply	Compliance Comments
3.2.2.6.1.b	The spacecraft shall provide control for spacecraft appendages.	3.7.1.4.4.a	The GN&CS shall rotate or slew the solar array to support power requirements during all modes except Safe Mode during all post-array-deployment operations.	Yes	
		3.7.1.4.4.b	The GN&CS shall control pointing of the Solar Array based on Solar Array position data by providing step rate commands to the Solar Array Drive.	Yes	
		3.7.1.4.4.c	The GN&CS shall, on command, cease commanding the solar array motion.	Yes	
		3.7.1.4.5.a	The GN&CS shall control pointing of the HGA based on position data received from the COMS.	Yes	
		3.7.1.4.5.b	The GN&CS shall, on command, control the HGA.	Yes	
3.2.2.6.2	GN&C Primary Functions				
3.2.2.6.2.a	The spacecraft shall provide the following functional capabilities: a) Establish and maintain the spacecraft attitude relative to an Earth-based reference frame.	3.7.1.4.2.a	The GN&CS shall utilize reaction-wheel assemblies (RWAs) for primary attitude control.	Yes	

CEI Compliance to RD

RD Rqmt #	RD Requirement Text	CEI Rqmt #	CEI Rqmt Text	Comply	Compliance Comments
		3.7.1.4.2.3.a	The GN&CS shall maintain a standby status when attached to the launch vehicle and shall initiate attitude acquisition upon launch vehicle separation.	Yes	
		3.7.1.4.2.3.b	The GN&CS shall acquire an Earth-based Spacecraft attitude within 30 minutes from the launch vehicle separation.	Yes	
3.2.2.6.2.b	b) Establish and maintain the spacecraft orbit position and velocity and accept updates of same from a second source (e.g., ground).	3.2.1.4.a	The Spacecraft Bus shall maintain real-time, on-board estimates of Spacecraft position and velocity based upon on-board measurement processing/state propagation and based on ground-commanded orbit data estimates.	Yes	
		3.2.1.5.1.1.a	The Spacecraft Bus shall be capable, through ground-commanded propulsive maneuvers, of acquiring the Operational Phase orbit when injected by the launch vehicle into the following nominal orbit:	Yes	
		3.2.1.5.1.1.b	Perigee Radius 6927 km +5/-0 km	Yes	
		3.2.1.5.1.1.c	Apogee Radius 7075km +0/10 km	Yes	
		3.2.1.5.1.1.d	Inclination 98.2 deg +/- O.1 deg (TBR-4)	Yes	

CEI Compliance to RD

RD Rqmt #	RD Requirement Text	CEI Rqmt #	CEI Rqmt Text	Comply	Compliance Comments
		3.2.1.5.1.1.e	Argument of Perigee 168 deg (TBR-4)	Yes	
		3.2.1.5.1.1.f	Descending Node 10:15 - 10:45 AM (local mean solar time)	Yes	
		3.2.1.5.2.1.a	The Spacecraft Bus shall be capable, through ground-commanded propulsive maneuvers, of maintaining a nominal Operational Phase orbit which is near circular and sun-synchronous with the following characteristics:	Yes	
		3.2.1.5.2.1.b	Equatorial Altitude 705 +/-5 km	Yes	
		3.2.1.5.2.1.c	Semi-Major Axis: 7078 +/-5 km (mean)	Yes	
		3.2.1.5.2.1.d	Inclination: 98.2 degrees + /-0.15 degrees	Yes	
		3.2.1.5.2.1.e	Eccentricity .0012 +/-0.0004	Yes	
		3.2.1.5.2.1.f	Argument of Perigee 90 +/-20 degrees	Yes	
		3.2.1.5.2.1.g	Descending Node 10:30 am +/-15 min (local mean solar time)	Yes	

CEI Compliance to RD

RD Rqmt #	RD Requirement Text	CEI Rqmt #	CEI Rqmt Text	Comply	Compliance Comments
3.2.2.6.2.c	Maintain spacecraft time and accept periodic time correction updates from the ground.	3.2.1.4.1.1.a	The Spacecraft Bus shall receive timing signals from the ground via TDRSS satellites and shall process these signals to allow ground measurment of errors in the spacecraft clock using the User Spacercraft Clock Calibration System (USCCS).	Yes	
		3.7.1.6.5.b	The C&DHS shall propagate a master Spacecraft Clock synchronously with the master frequency reference.	Yes	
		3.7.1.6.5.d	The C&DHS shall accept and execute commands to set and adjust the Spacecraft Clock time.	Yes	
3.2.2.6.2.d	c) Provide state vector (orbit data, attitude data, and time) and other special purpose information to support individual instrument functions on the spacecraft.	3.7.1.4.7.a	The GN&CS shall derive all Spacecraft orbital position, velocity, attitude, and attitude error rate information for inclusion in ancillary data.	Yes	
		3.7.1.4.7.b	The GN&CS shall derive solar and lunar position information for inclusion in ancillary data.	Yes	
		3.7.1.4.7.c	The GN&CS shall provide magnetic torquer coil current information for inclusion in ancillary data.	Yes	

CEI Compliance to RD

RD Rqmt #	RD Requirement Text	CEI Rqmt #	CEI Rqmt Text	Comply	Compliance Comments
3.2.2.6.2.e	d) Provide attitude control for spacecraft appendages.	3.7.1.4.4.b	The GN&CS shall control pointing of the Solar Array based on Solar Array position data by providing step rate commands to the Solar Array Drive.	Yes	
		3.7.1.4.5.a	The GN&CS shall control pointing of the HGA based on position data received from the COMS.	Yes	
		3.7.1.4.5.b	The GN&CS shall, on command, control the HGA.	Yes	
3.2.2.6.2.f	e) Provide control commands for propulsion thruster operation.	3.7.1.4.6.a	The GN&CS shall support propulsive operations for delta-V and attitude control maneuvers, and for backup momentum unloading.	Yes	
		3.7.1.4.6.b	The GN&CS shall control PROPS thrusters for these operations by providing thruster selection and pulse width commands to PROPS on a periodic basis.	Yes	
3.2.2.6.2.g	f) Provide algorithm flexibility to accommodate anticipated spacecraft mass variations.	3.7.1.4.1.a	The GN&CS shall determine and control the Spacecraft attitude in all modes during all phases following the Launch/Ascent phase.	Yes	
3.2.2.6.2.h	g) Provide momentum management while controlling the spacecraft attitude.	3.7.1.4.1.a	The GN&CS shall determine and control the Spacecraft attitude in all modes during all phases following the Launch/Ascent phase.	Yes	

CEI Compliance to RD

RD Rqmt #	RD Requirement Text	CEI Rqmt #	CEI Rqmt Text	Comply	Compliance Comments
		3.7.1.4.2.b	The GN&CS shall utilize magnetic torquers as the primary means for momentum unloading.	Yes	
3.2.2.6.2.i	In the normal operating mode, primary momentum management shall be performed without use of propulsive consumables.	3.7.1.4.2.b	The GN&CS shall utilize magnetic torquers as the primary means for momentum unloading.	Yes	
3.2.2.6.2.j	h) The spacecraft shall provide pointing information referenced to the navigation base.	3.7.1.4.7.d	The GN&CS shall reference all pointing data in ancillary data to the navigation base, and accuracy and knowledge to the earth's center.	Yes	
3.2.2.6.3	Performance Requirements				
3.2.2.6.3.1	Attitude Control				
3.2.2.6.3.1.a	In the normal operational mode, the spacecraft shall meet all attitude control requirements specified below. The attitude control requirements are specified with respect to an earth-centered coordinate reference system.	3.2.1.1.2.4.a	The Spacecraft Bus shall maintain the following parameter limits at the Instrument interfaces with the Spacecraft Bus: a. 150 arc-sec, 3 sigma, per axis pointing accuracy during Science Mode operations;	Yes	
		3.7.1.4.1.a	The GN&CS shall determine and control the Spacecraft attitude in all modes during all phases following the Launch/Ascent phase.	Yes	

CEI Compliance to RD

RD Rqmt #	RD Requirement Text	CEI Rqmt #	CEI Rqmt Text	Comply	Compliance Comments
		3.7.1.4.7.d	The GN&CS shall reference all pointing data in ancillary data to the navigation base, and accuracy and knowledge to the earth's center.	Yes	
3.2.2.6.3.1.b	Pointing Knowledge: 90 arc-sec, 3 sigma, at the instrument interface	3.2.1.1.2.4.b	b. 90 arc-sec, 3 sigma, per axis pointing knowledge during Science Mode operations;	Yes	
3.2.2.6.3.1.c	Pointing Accuracy: 150 arc-sec, 3 sigma, at the instrument interface	3.2.1.1.2.4.a	The Spacecraft Bus shall maintain the following parameter limits at the Instrument interfaces with the Spacecraft Bus: a. 150 arc-sec, 3 sigma, per axis pointing accuracy during Science Mode operations;	Yes	
3.2.2.6.3.1.d	Stability: TBD (arc-sec)	3.2.1.1.2.4.c	c. TBD stability;	Yes	
3.2.2.6.3.1.e	Jitter: TBD (arc-sec)	3.2.1.1.2.4.d	d. TBD jitter; and	Yes	
3.2.2.6.3.2	Orbit Determination and Control				

CEI Compliance to RD

RD Rqmt #	RD Requirement Text	CEI Rqmt #	CEI Rqmt Text	Comply	Compliance Comments
3.2.2.6.3.2.a	The spacecraft shall be capable of orbit determination and control consistent with the requirements specified in 3.1.1.	3.2.1.5.2.1.a	The Spacecraft Bus shall be capable, through ground-commanded propulsive maneuvers, of maintaining a nominal Operational Phase orbit which is near circular and sun-synchronous with the following characteristics:	Yes	
3.2.2.6.3.2.b	Time-tagged orbit data shall be provided to the instruments at an accuracy and interval of TBD.	3.2.1.1.2.3.a	The Spacecraft Bus shall provide ancillary data to Instruments such that the age of any data at delivery will never exceed 2.048 (TBR-1) seconds.	Yes	
		3.7.1.4.7.a	The GN&CS shall derive all Spacecraft orbital position, velocity, attitude, and attitude error rate information for inclusion in ancillary data.	Yes	
		3.7.1.4.7.e	The GN&CS-provided ancillary data shall be time-correlated such that validity times may be determined, and shall be provided within 0.5 seconds of the time of validity. Position data shall be time- correlated to 0.1 msec (0.8 meters equivalent). Attitude data shall be time-correlated to within 3 msec.	Yes	
		9.9.9.9.e	No-match in Contract End Item Specification PS20005386	No	Missing from CEI. Design supplies the data every 1.024 sec.

CEI Compliance to RD

RD Rqmt #	RD Requirement Text	CEI Rqmt #	CEI Rqmt Text	Comply	Compliance Comments
3.2.2.6.3.3	Orbit Position Knowledge				
3.2.2.6.3.3.a	The spacecraft shall provide the instrument interfaces with a spacecraft position knowledge of +/-150m, 3 sigma, per axis during science mode operations.	3.2.1.1.2.4.e	e. Spacecraft position knowledge of +/-150m, 3 sigma, per axis during Science Mode operations.	Yes	
3.2.2.6.4	Modes of Operation				
3.2.2.6.4.a	This section defines the functional requirements for the various spacecraft operational modes.				
3.2.2.6.4.1	Launch Mode				
3.2.2.6.4.1.a	The spacecraft shall be capable of being configured into a mode consistent with launch, and shall be capable of initiating the acquisition mode upon launch vehicle separation.	3.7.1.1.3.a	All subsystems shall provide the minimum capability demanded of them during each mode defined in 3.1.4.2 without drawing greater than the power levels presented in Table XI for that mode.	Yes	
		3.7.1.4.2.3.a	The GN&CS shall maintain a standby status when attached to the launch vehicle and shall initiate attitude acquisition upon launch vehicle separation.	Yes	
3.2.2.6.4.2	Acquisition and Normal Operation Modes				

CEI Compliance to RD

RD Rqmt #	RD Requirement Text	CEI Rqmt #	CEI Rqmt Text	Comply	Compliance Comments
3.2.2.6.4.2.a	The spacecraft shall be capable of acquiring and maintaining the specified attitude accuracy to an Earth-based reference frame from any initial arbitrary attitude.	3.2.1.6.4.4.a	If the Spacecraft enters safe mode due to an attitude maintenance anomaly the Spacecraft Bus shall acquire and maintain a thermal- and power-safe attitude.	Yes	
		3.7.1.4.2.2.a	The GN&CS shall perform attitude slew maneuvers for Earth acquisition, reacquistion, orbit acquisition, orbit trim and orbit maintenance delta-V maneuvers.	Yes	
		3.7.1.4.2.3.b	The GN&CS shall acquire an Earth-based Spacecraft attitude within 30 minutes from the launch vehicle separation.	Yes	
3.2.2.6.4.3	Orbital Maneuvers				
3.2.2.6.4.3.1	Orbit Adjust Mode				
3.2.2.6.4.3.1.a	The spacecraft shall, upon receipt of an external command, provide the appropriate spacecraft attitude and actuator sequencing for Orbit Adjust execution.	3.2.1.5.2.1.a	The Spacecraft Bus shall be capable, through ground-commanded propulsive maneuvers, of maintaining a nominal Operational Phase orbit which is near circular and sun-synchronous with the following characteristics:	Yes	

CEI Compliance to RD

RD Rqmt #	RD Requirement Text	CEI Rqmt #	CEI Rqmt Text	Comply	Compliance Comments
		3.2.1.5.2.2.a	The Spacecraft Bus shall be capable, through ground-commanded propulsive maneuvers, of establishing and maintaining a nominal Operational Phase ground track in which the subsatellite point will follow a path which repeats as follows:	Yes	
3.2.2.6.4.3.2	Orbit Transfer				
3.2.2.6.4.3.2.a	The spacecraft shall, upon receipt of an external command, provide the appropriate spacecraft attitude and actuator sequencing for Orbit Transfer execution.	3.2.1.5.1.1.a	The Spacecraft Bus shall be capable, through ground-commanded propulsive maneuvers, of acquiring the Operational Phase orbit when injected by the launch vehicle into the following nominal orbit:	Yes	
3.2.2.6.4.3.3	Reserved				
3.2.2.6.4.4	Safe Hold Mode				
3.2.2.6.4.4.a	The spacecraft shall provide an independent back-up control function or safe mode capable of orienting and maintaining the spacecraft in a power and thermal safe attitude for an indefinite period of time.	3.2.1.6.4.4.a	If the Spacecraft enters safe mode due to an attitude maintenance anomaly the Spacecraft Bus shall acquire and maintain a thermal- and power-safe attitude.	Yes	

CEI Compliance to RD

RD Rqmt #	RD Requirement Text	CEI Rqmt #	CEI Rqmt Text	Comply	Compliance Comments
3.2.2.6.4.4.b	Activation of this safe mode control function shall be possible through both onboard autonomous processor failure detection and ground command.	3.2.1.6.4.1.a	The Spacecraft shall autonomously enter Safe Mode under either of the following conditions: a) detection that the processors or flight software are incapable of supporting safe Spacecraft operations or b) the GN&C subsystem fails to maintain the spacecraft attitude within predetermined thresholds.	Yes	
		3.7.1.4.8.a	The GN&CS shall provide Safe Mode functions independent of the C&DHS that are automatically activated or ground activated and ground deactivated, during all post-separation mission phases to: a.) Reserved;	Yes	
		3.7.1.6.11.b	The C&DHS shall initiate Safe Mode entry immediately upon command from the ground.	Yes	
3.2.2.6.4.4.c	The safe hold mode shall be independnet of the primary control system processors and data system networks.	3.2.1.6.4.4.a	If the Spacecraft enters safe mode due to an attitude maintenance anomaly the Spacecraft Bus shall acquire and maintain a thermal- and power-safe attitude.	Yes	

CEI Compliance to RD

RD Rqmt #	RD Requirement Text	CEI Rqmt #	CEI Rqmt Text	Comply	Compliance Comments
		3.2.1.6.4.4.b	If the Spacecraft enters safe mode due to a computer or software anomaly, the Spacecraft shall maintain a thermal-and power-safe attitude independently of the primary flight computers and flight software.	Yes	
3.2.2.6.4.5	Calibration and Checkout Mode				
3.2.2.6.4.5.a	The spacecraft shall be capable of performing on-orbit alignment calibration of GN&C sensors and actuators.	3.7.1.4.9.a	The GN&CS shall provide telemetry data which will enable ground operators to calibrate the on-orbit alignment of sensors and actuators.	Yes	
3.2.2.6.4.5.b	The Spacecraft shall provide the capability to perform control system equipment checkout.	3.2.1.3.3.a	The Spacecraft Bus shall accept commands and provide telemetry to support verification of end-to-end data throughput capabilities of flight and ground elements, and to support prelaunch and on-orbit Spacecraft checkout.	Yes	
		3.7.1.4.9.a	The GN&CS shall provide telemetry data which will enable ground operators to calibrate the on-orbit alignment of sensors and actuators.	Yes	
3.2.2.7	Propulsion				

CEI Compliance to RD

RD Rqmt #	RD Requirement Text	CEI Rqmt #	CEI Rqmt Text	Comply	Compliance Comments
3.2.2.7.a	The spacecraft shall provide thrust for attitude control torque and orbital velocity correction during all flight phases.	3.2.1.5.2.1.a	The Spacecraft Bus shall be capable, through ground-commanded propulsive maneuvers, of maintaining a nominal Operational Phase orbit which is near circular and sun-synchronous with the following characteristics:	Yes	
		3.2.1.13.1.g	f. Maintaining spacecraft attitude; and	Yes	
		3.7.1.4.1.a	The GN&CS shall determine and control the Spacecraft attitude in all modes during all phases following the Launch/Ascent phase.	Yes	
		3.7.1.8.1.a	The PROPS shall provide all propulsive thrust required by the Spacecraft to support attitude and orbit control during all mission phases	Yes	
			data on the Q channel.		
			DAS DDL shall not be simultaneous	Yes	
3.2.2.7.1	General Description				
3.2.2.7.1.a	The spacecraft shall provide thrust for orbital velocity control and torques for three-axis attitude control.	3.2.1.5.2.1.a	The Spacecraft Bus shall be capable, through ground-commanded propulsive maneuvers, of maintaining a nominal Operational Phase orbit which is near circular and sun-synchronous with the following characteristics:	Yes	
		3.2.1.13.1.g	f. Maintaining spacecraft attitude; and	Yes	

CEI Compliance to RD

RD Rqmt #	RD Requirement Text	CEI Rqmt #	CEI Rqmt Text	Comply	Compliance Comments
		3.7.1.8.1.a	The PROPS shall provide all propulsive thrust required by the Spacecraft to support attitude and orbit control during all mission phases following the launch/ascent phase.	Yes	
		3.7.1.8.1.b	The PROPS shall provide impulses for orbit circularization after injection, and for orbit maintenance at operational altitude, including atmospheric drag make-up and inclination correction.	Yes	
3.2.2.7.2	Requirements				
3.2.2.7.2.1	Attitude Control				
3.2.2.7.2.1.a	The spacecraft shall provide the impulse required for three-axis control of the spacecraft during accomplishment of the following functions: attitude stabilization, attitude reorientation, and momentum management.	3.7.1.4.2.1.a	The GN&CS shall maintain an Earth-based attitude to support the Spacecraft science mode pointing requirements.	Yes	
		3.7.1.8.1.a	The PROPS shall provide all propulsive thrust required by the Spacecraft to support attitude and orbit control during all mission phases following the launch/ascent phase.	Yes	
		3.7.1.8.1.c	The PROPS shall provide impulsive torques for on-orbit three-axis attitude control, three-axis attitude slews, Earth acquisitions, and reaction wheel momentum unloading.	Yes	

CEI Compliance to RD

RD Rqmt #	RD Requirement Text	CEI Rqmt #	CEI Rqmt Text	Comply	Compliance Comments
3.2.2.7.2.2	Orbital Velocity Control				
3.2.2.7.2.2.a	The spacecraft shall provide the impulse required for control of the spacecraft orbital velocity vector. This control is required for the following purposes: atmospheric drag compensation, orbit adjustments, and orbit transfers.	3.7.1.4.2.2.a	The GN&CS shall perform attitude slew maneuvers for Earth acquisltion, reacquistion, orbit acquisition, orbit trim and orbit maintenance delta-V maneuvers.	Yes	
		3.7.1.8.1.a	The PROPS shall provide all propulsive thrust required by the Spacecraft to support attitude and orbit control during all mission phases following the launch/ascent phase.	Yes	
		3.7.1.8.1.b	The PROPS shall provide impulses for orbit circularization after injection, and for orbit maintenance at operational altitude, including atmospheric drag make-up and inclination correction.	Yes	
3.2.2.7.2.3	Propellants				
3.2.2.7.2.3.a	Mission orbit maintenance shall be accomplished via a monopropellant hydrazine subsystem.	3.7.1.8.2.a	The PROPS shall use hydrazine as a monopropellant for all thrusters.	Yes	
3.2.2.7.2.3.b	The spacecraft orbital maintenance propellant capacity shall be sized for 7.5 years of orbit maintenance.	3.7.1.8.2.b	The PROPS shall carry at launch a propellant quantity equal to 110% of that needed to accomplish maintenance of the operational orbit for a period of 7.5 years.	Yes	

CEI Compliance to RD

RD Rqmt #	RD Requirement Text	CEI Rqmt #	CEI Rqmt Text	Comply	Compliance Comments
3.2.2.7.2.3.c	A propellant reserve margin of 10% beyond a 7.5 year mission shall be provided.	3.7.1.8.2.b	The PROPS shall carry at launch a propellant quantity equal to 110% of that needed to accomplish maintenance of the operational orbit for a period of 7.5 years.	Yes	
3.2.2.7.2.3.d	The spacecraft shall provide a method for determining available propellant balance.	3.7.1.8.1.d	The PROPS shall perform all functions related to the storage and management of on-board propellants, including tankage, valve actuation, pressure sensing, flow sensing, leak detection and leak isolation.	Yes	
		3.7.1.8.2.c	The PROPS shall provide means whereby the remaining quantity of propellant on board may be determined to within 3% of the amount of propellant caried at launch.	Yes	
3.2.2.7.2.4	Propulsion Thruster Selection				
3.2.2.7.2.4.a	The spacecraft shall be capable of selecting/deselecting to the individual thruster engine.	3.7.1.8.3.d	PROPS thruster firings shall be commandable such that either the primary or redundant set of thrusters may be selected for firing.	Yes	
		3.7.1.8.3.g	The PROPS shall accept and execute commands for selecting and deselecting each individual thruster engine.	Yes	

CEI Compliance to RD

RD Rqmt #	RD Requirement Text	CEI Rqmt #	CEI Rqmt Text	Comply	Compliance Comments
		3.7.1.8.3.h	When a thruster is deselected, commands to fire that thruster from any source shall be ignored by the PROPS.	Yes	
3.2.2.8	Command and Data Handling (C&DH)				
3.2.2.8.1	General Description				
3.2.2.8.1.a	The spacecraft shall provide for: a) the storage and distribution of commands, telemetry and data between instruments, subsystems, and the ground;	3.2.1.1.3.1.a	The Spacecraft Bus shall collect, and transmit to the ground, Instrument telemetry data.	Yes	
		3.2.1.1.4.a	The Spacecraft Bus shall receive, validate, and deliver all Instrument commands	Yes	
		3.2.1.3.4.a	The Spacecraft Bus shall provide for the distribution of data between and within subsystems.	Yes	
		3.7.1.5.2.d	The COMS, when commanded to the proper state, shall transmit all valid data provided by C&DH for transmission to the ground.	Yes	
		3.7.1.6.1.a	THE C&DHS shall provide: a. Distribution of realtime and stored commands generated on the ground or by the onboard software.	Yes	

CEI Compliance to RD

RD Rqmt #	RD Requirement Text	CEI Rqmt #	CEI Rqmt Text	Comply	Compliance Comments
		3.7.1.6.1.b	b. The periodic collection of Spacecraft Bus telemetry and instrument housekeeping telemetry and the formatting of these data for transmission to the ground and the onboard software.	Yes	
		3.7.1.6.1.c	c. Delivery of these formatted data to COMS and to the FSWS.	Yes	
		3.7.1.6.1.d	d. The gathering, formatting, multiplexing, and recording of multiple streams of packetized instrument science data.	Yes	
		3.7.1.6.1.e	e. The generation and distribution of precise, accurate time and frequency references.	Yes	
		3.7.1.6.1.f	f. The onboard communication of digital data between and among the distributed hardware and software components of Spacecraft subsystems and between Spacecraft subsystems and instruments.	Yes	
		3.7.1.6.1.h	h. The input and output of data from/to subsystem sensors/effectors and instruments, including appropriate signal conditioning and conversion of signals between the analog and digital domains.	Yes	

CEI Compliance to RD

RD Rqmt #	RD Requirement Text	CEI Rqmt #	CEI Rqmt Text	Comply	Compliance Comments
		3.7.1.6.1.i	i. Accepting the SCC-based Flight Software Subsystem prepared and formatted ancillary data message, then replicating and delivering the ancillary data message to the onboard instruments and transmitting it to the ground for ground system use.	Yes	
		3.7.1.6.2.d	The C&DHS shall distribute validated commands to the appropriate Spacecraft elements as identified by addressing information in the commands.	Yes	
		3.7.1.6.2.g	The C&DHS shall receive processor load data via the normal command interfaces and distribute the load data to the destination Spacecraft element.	Yes	
		3.7.1.6.3.l	The C&DHS shall transmit the telemetry data streams, the diagnostic data stream, and the playback data stream to the S-band transponder.	Yes	
		3.7.1.6.3.m	The C&DHS shall provide telemetry to the GSE and LSE as specified in the Ground Support Equipment Requirements Document, 20001430.	Yes	

CEI Compliance to RD

RD Rqmt #	RD Requirement Text	CEI Rqmt #	CEI Rqmt Text	Comply	Compliance Comments
3.2.2.8.1.b	b) the storage and execution of application software, and the operating environment of that software;	3.7.1.6.1.g	g. Providing the processing and software resources required for the execution and storage of the programs and data belonging to the onboard subsystems.	Yes	
		3.7.1.6.2.a	The C&DHS shall accept, decode, and distribute command data transfers from the SCC-based FSWS Spacecraft elements.	Yes	
		3.7.1.6.7.a	The C&DHS shall provide all computing devices required to provide memory storage and program execution services to SCC-based FSWS software.	Yes	
		3.7.1.6.7.b	The C&DHS shall, as a minimum, provide the following computing resources to FSWS software: (a) 1.5 MIPS DAIS throughput, and (b) 1 Mword processor memory for programs and data.	Yes	
		3.7.1.6.7.c	The C&DHS shall provide command services in support of modifications to loaded FSWS software.	Yes	
		3.7.1.6.7.d	The C&DHS shall provide telemetry services which allow ground controllers to inspect FSWS.	Yes	

CEI Compliance to RD

RD Rqmt #	RD Requirement Text	CEI Rqmt #	CEI Rqmt Text	Comply	Compliance Comments
		3.7.1.6.7.e	The C&DHS shall provide interfaces whereby SCC-based FSWS software may acess the various C&DHS data communications services.	Yes	
		3.7.1.10.11.a	The FSWS shall provide a standardized software operating environment for the execution of subsystem application software.	Yes	
3.2.2.8.1.c	c) the input and output of data to/from subsystems and instruments, including appropriate signal conditioning and conversion of data between the digital and analog domains;	3.7.1.6.1.h	h. The input and output of data from/to subsystem sensors/effectors and instruments, including appropriate signal conditioning and conversion of signals between the analog and digital domains.	Yes	
		3.7.1.6.6.f	The C&DHS shall perform appropriate signal conditioning and signal conversion between the analog and digital domains in support of the input and output of data to and from subsystems and instruments.	Yes	
3.2.2.8.1.d	d) the distribution of time, frequency, and navigational information to instruments, subsystems, and the ground.	3.2.1.3.2.1.1.j	i. Periodic samples of the navigation/attitude state vector, and	Yes	
		3.7.1.4.7.a	The GN&CS shall derive all Spacecraft orbital position, velocity, attitude, and attitude error rate information for inclusion in ancillary data.	Yes	

CEI Compliance to RD

RD Rqmt #	RD Requirement Text	CEI Rqmt #	CEI Rqmt Text	Comply	Compliance Comments
		3.7.1.4.7.b	The GN&CS shall derive solar and lunar position information for inclusion in ancillary data.	Yes	
		3.7.1.4.7.c	The GN&CS shall provide magnetic torquer coil current information for inclusion in ancillary data.	Yes	
		3.7.1.6.1.d	d. The gathering, formatting, multiplexing, and recording of multiple streams of packetized instrument science data.	Yes	
		3.7.1.6.1.e	e. The generation and distribution of precise, accurate time and frequency references.	Yes	
		3.7.1.6.1.i	i. Accepting the SCC-based Flight Software Subsystem prepared and formatted ancillary data message, then replicating and delivering the ancillary data message to the onboard instruments and transmitting it to the ground for ground system use.	Yes	

CEI Compliance to RD

RD Rqmt #	RD Requirement Text	CEI Rqmt #	CEI Rqmt Text	Comply	Compliance Comments
		3.7.1.6.5.c	The C&DHS shall support ground measurement of the Spacecraft Clock time via the USCCS, in accordance with NASA 531-TR-001. This includes providing telemetry data indicating the transmission time of telemetry stream synchronization patterns, and the receipt time of COMS-generated epoch signals.	Yes	
		3.7.1.6.8.a	The C&DHS shall accept formatted ancillary data messages from the FSWs.	Yes	
		3.7.1.10.6.a	The Flight Software System shall accept ancillary data generated by subsystems.	Yes	
		3.7.1.10.6.b	The FSWS shall provide the C&DHS with formatted ancillary data for distribution to the Instruments.	Yes	
		3.7.1.10.6.c	The FSWS shall provide ancillary data message to the C&DHS. The duration of FSWS processing of any data will never exceed .924 seconds.	Yes	

CEI Compliance to RD

RD Rqmt #	RD Requirement Text	CEI Rqmt #	CEI Rqmt Text	Comply	Compliance Comments
3.2.2.8.1.e	e) the initiation on command of the independent GN&C safe mode.	3.2.1.6.4.1.a	The Spacecraft shall autonomously enter Safe Mode under either of the following conditions: a) detection that the processors or flight software are incapable of supporting safe Spacecraft operations or b) the GN&C subsystem fails to maintain the spacecraft attitude within predetermined thresholds.	Yes	
		3.7.1.4.8.a	The GN&CS shall provide Safe Mode functions independent of the C&DHS that are automatically activated or ground activated and ground deactivated, during all post-separation mission phases to: a.) Reserved;	Yes	
		3.7.1.6.11.b	The C&DHS shall initiate Safe Mode entry immediately upon command from the ground.	Yes	
3.2.2.8.2	Functional Requirements				
3.2.2.8.2.1	General				

CEI Compliance to RD

RD Rqmt #	RD Requirement Text	CEI Rqmt #	CEI Rqmt Text	Comply	Compliance Comments
3.2.2.8.2.1.a	The spacecraft shall support the transmission, reception, processing, controlling, storage, and distribution of operational data and commands.	3.2.1.1.3.1.a	The Spacecraft Bus shall collect, and transmit to the ground, Instrument telemetry data.	Yes	
		3.2.1.1.4.a	The Spacecraft Bus shall receive, validate, and deliver all Instrument commands	Yes	
		3.2.1.2.3.a	The Spacecraft Bus shall be capable of storing at least 140 (TBR-2) Gbits of Instrument science data, ancillary data, and Spacecraft health and status data.	Yes	
		3.2.1.2.4.1.a	The Spacecraft Bus shall, on command, transmit real-time or stored science data to the ground.	Yes	
		3.2.1.3.2.2.1.a	The Spacecraft Bus shall transmit stored housekeeping telemetry data to the ground as commanded by the ground.	Yes	
		3.2.1.3.4.a	The Spacecraft Bus shall provide for the distribution of data between and within subsystems.	Yes	
		3.7.1.5.2.a	The COMS shall perform the reception and demodulation of all digital data transmitted to the Spacecraft from the ground.	Yes	

CEI Compliance to RD

RD Rqmt #	RD Requirement Text	CEI Rqmt #	CEI Rqmt Text	Comply	Compliance Comments
		3.7.1.5.2.b	The COMS shall perform the modulation and transmission of all digital data to be transferred from the Spacecraft to the ground.	Yes	
		3.7.1.5.2.c	The COMS shall perform the convolutional encoding (rate 1/2, constraint length 7), prior to modulation and transmission, of digital data to be transferred to the ground via all COMS-provided communications links which require such encoding.	Yes	
		3.7.1.5.2.d	The COMS, when commanded to the proper state, shall transmit all valid data provided by C&DH for transmission to the ground.	Yes	
		3.7.1.5.2.e	The COMS shall provide the interface for command function through the launch vehicle umbilical for prelaunch checkout.	Yes	
		3.7.1.6.1.a	THE C&DHS shall provide: a. Distribution of realtime and stored commands generated on the ground or by the onboard software.	Yes	

CEI Compliance to RD

RD Rqmt #	RD Requirement Text	CEI Rqmt #	CEI Rqmt Text	Comply	Compliance Comments
		3.7.1.6.1.b	b. The periodic collection of Spacecraft Bus telemetry and instrument housekeeping telemetry and the formatting of these data for transmission to the ground and the onboard software.	Yes	
		3.7.1.6.1.c	c. Delivery of these formatted data to COMS and to the FSWS.	Yes	
		3.7.1.6.1.d	d. The gathering, formatting, multiplexing, and recording of multiple streams of packetized instrument science data.	Yes	
		3.7.1.6.1.e	e. The generation and distribution of precise, accurate time and frequency references.	Yes	
		3.7.1.6.1.f	f. The onboard communication of digital data between and among the distributed hardware and software components of Spacecraft subsystems and between Spacecraft subsystems and instruments.	Yes	
		3.7.1.6.1.g	g. Providing the processing and software resources required for the execution and storage of the programs and data belonging to the onboard subsystems.	Yes	

CEI Compliance to RD

RD Rqmt #	RD Requirement Text	CEI Rqmt #	CEI Rqmt Text	Comply	Compliance Comments
		3.7.1.6.1.h	h. The input and output of data from/to subsystem sensors/effectors and instruments, including appropriate signal conditioning and conversion of signals between the analog and digital domains.	Yes	
		3.7.1.6.1.i	i. Accepting the SCC-based Flight Software Subsystem prepared and formatted ancillary data message, then replicating and delivering the ancillary data message to the onboard instruments and transmitting it to the ground for ground system use.	Yes	
		3.7.1.6.1.j	The C&DHS shall format all data streams to be transferred from the Spacecraft to the EOSDIS and shall provide these streams to the COMS.	Yes	
		3.7.1.6.1.k	All encoding (with the exception of convolutional encoding, which is performed by the COMS) of baseband data in these streams for the purpose of return link error control shall be performed by the C&DHS.	Yes	
		3.7.1.6.2.a	The C&DHS shall accept, decode, and distribute command data transfers from the SCC-based FSWS Spacecraft elements.	Yes	

CEI Compliance to RD

RD Rqmt #	RD Requirement Text	CEI Rqmt #	CEI Rqmt Text	Comply	Compliance Comments
		3.7.1.6.2.b	The C&DHS shall accept and process all uplink command data transfers demodulated by COMS.	Yes	
		3.7.1.6.2.d	The C&DHS shall distribute validated commands to the appropriate Spacecraft elements as identified by addressing information in the commands.	Yes	
		3.7.1.6.2.g	The C&DHS shall receive processor load data via the normal command interfaces and distribute the load data to the destination Spacecraft element.	Yes	
		3.7.1.6.3.c	The C&DHS shall sample, gather, format, and deliver to FSWS that data which the FSWS requires to control the Spacecraft.	Yes	
		3.7.1.6.3.l	The C&DHS shall transmit the telemetry data streams, the diagnostic data stream, and the playback data stream to the S-band transponder.	Yes	
		3.7.1.6.3.m	The C&DHS shall provide telemetry to the GSE and LSE as specified in the Ground Support Equipment Requirements Document, 20001430.	Yes	
		3.7.1.6.4.a	The C&DHS shall format the science data in accordance with IS20008658.	Yes	

CEI Compliance to RD

RD Rqmt #	RD Requirement Text	CEI Rqmt #	CEI Rqmt Text	Comply	Compliance Comments
		3.7.1.6.4.b	The C&DHS, on command, shall format, encode as necessary, and forward to the COMS, for transmission via TDRSS KSA or DAS links, real-time science data streams at formatted data rates as needed to transmit the peak Instrument science data rates along with the ancillary and housekeeping telemetry data.	Yes	
		3.7.1.6.4.c	The C&DHS, on command, shall format, encode as necessary, and store for later playback, a science data stream at a formatted data rate sufficient to accommodate the aggregate of the Instrument science data rates along with the ancillary and housekeeping telemetry data.	Yes	
		3.7.1.6.4.e	The C&DHS shall, on command, playback and route the recorded data to the COMS at a final total bit transmission rate commensurate with the playback of a nominal orbit within a scheduled TDRSS total contact time of 20 minutes. The playback rate shall be within the constraints of the TDRSS SA service utlization and within the Spacecraft-level constraints on maximum link data rate.	Yes	

CEI Compliance to RD

RD Rqmt #	RD Requirement Text	CEI Rqmt #	CEI Rqmt Text	Comply	Compliance Comments
		3.7.1.6.6.a	The C&DHS shall be capable of providing data transport services in support of the following data transfers: a. Within Spacecraft subsystems between on-board subsystem hardware components which are not directly interconnected.	Yes	
		3.7.1.6.6.b	b. Within Spacecraft subsystems between hardware and software subsystem components.	Yes	
		3.7.1.6.6.c	c. Within Spacecraft subsystems between software subsystem components.	Yes	
		3.7.1.6.6.d	d. Between Spacecraft subsystems.	Yes	
		3.7.1.6.6.e	e. Between Spacecraft subsystems and Instruments.	Yes	
		3.7.1.6.6.f	The C&DHS shall perform appropriate signal conditioning and signal conversion between the analog and digital domains in support of the input and output of data to and from subsystems and Instruments.	Yes	

CEI Compliance to RD

RD Rqmt #	RD Requirement Text	CEI Rqmt #	CEI Rqmt Text	Comply	Compliance Comments
3.2.2.8.2.1.b	The spacecraft shall use procedures to preserve the integrity of data it processes and distributes.	3.2.1.2.2.2.a	The Spacecraft Bus shall meet Grade of Service 2 as defined in CCSDS 701.00_B_1 for all science data.	Yes	
		3.2.1.2.4.4.a	During science operations, the Spacecraft Bus shall not cause the loss (i.e. dropped bits, fragmented transfer frames, etc.) of any Instrument science data other than that due to random bit errors.	Yes	
		3.2.1.2.5.a	The spacecraft Bus Shall contreibute no more that 10E-7 (TBR-3) bit errors/bit BER to the insturment science collected during any orbit, when measured between the insturment interface and the output on the ground of the CCDS Grade 2 processing. This does not include the BER, included by the communications links external to the Spacecraft.	Yes	
		3.2.1.8.2.2.a	The Spacecraft Bus shall accept FEC-coded uplinked data and transfer frames via the S-band forward links and shall perform Error Detection decoding.	Yes	

CEI Compliance to RD

RD Rqmt #	RD Requirement Text	CEI Rqmt #	CEI Rqmt Text	Comply	Compliance Comments
		3.2.1.8.2.2.b	When errors are detected, the Spacecraft shall discard the erroneous data, notify the ground of the error and accept retransmission of the erroneous data in accordance with the COP-1 protocol.	Yes	
		3.7.1.6.2.c	The C&DHS shall perform all functions associated with the validation and error control of the data received from the COMS, including the closure of any end-to-end retransmission protocols used on the forward links from the EOSDIS to the Spacecraft, in accordance with IS20008658.	Yes	
3.2.2.8.2.2	Commands				
3.2.2.8.2.2.a	The spacecraft shall validate, store, and distribute commands intended for subsystems and instruments.	3.2.1.1.4.a	The Spacecraft Bus shall receive, validate, and deliver all Instrument commands	Yes	
		3.2.1.8.2.2.a	The Spacecraft Bus shall accept FEC-coded uplinked data and transfer frames via the S-band forward links and shall perform Error Detection decoding.	Yes	

CEI Compliance to RD

RD Rqmt #	RD Requirement Text	CEI Rqmt #	CEI Rqmt Text	Comply	Compliance Comments
		3.2.1.8.2.2.b	When errors are detected, the Spacecraft shall discard the erroneous data, notify the ground of the error and accept retransmission of the erroneous data in accordance with the COP-1 protocol.	Yes	
		3.2.1.8.2.4.a	The Spacecraft Bus shall provide both Absolute-Time and Relative-Time-Command Sequence (RTCS) stored command services.	Yes	
		3.7.1.6.1.a	THE C&DHS shall provide: a. Distribution of realtime and stored commands generated on the ground or by the onboard software.	Yes	
		3.7.1.6.1.c	c. Delivery of these formatted data to COMS and to the FSWS.	Yes	
		3.7.1.6.1.g	g. Providing the processing and software resources required for the execution and storage of the programs and data belonging to the onboard subsystems.	Yes	
		3.7.1.6.2.a	The C&DHS shall accept, decode, and distribute command data transfers from the SCC-based FSWS Spacecraft elements.	Yes	

CEI Compliance to RD

RD Rqmt #	RD Requirement Text	CEI Rqmt #	CEI Rqmt Text	Comply	Compliance Comments
		3.7.1.6.2.c	The C&DHS shall perform all functions associated with the validation and error control of the data received from the COMS, including the closure of any end-to-end retransmission protocols used on the forward links from the EOSDIS to the Spacecraft, in accordance with IS20008658.	Yes	
		3.7.1.6.2.d	The C&DHS shall distribute validated commands to the appropriate Spacecraft elements as identified by addressing information in the commands.	Yes	
3.2.2.8.2.2.b	The spacecraft shall store and provide delayed delivery for time-tagged commands and command sequences.	3.2.1.8.2.a	The Spacecraft shall accept commands for both real-time and stored command execution.	Yes	
		3.2.1.8.2.4.a	The Spacecraft Bus shall provide both Absolute-Time and Relative-Time-Command Sequence (RTCS) stored command services.	Yes	
		3.2.1.8.2.4.1.a	The Spacecraft shall accept commands and associated execution times for Absolute-Time stored commanding.	Yes	

CEI Compliance to RD

RD Rqmt #	RD Requirement Text	CEI Rqmt #	CEI Rqmt Text	Comply	Compliance Comments
		3.2.1.8.2.4.1.b	Each command shall be distributed within 1.024 second after the Spacecraft time reaches the execution time.	Yes	
		3.2.1.8.2.4.2.a	The Spacecraft Bus shall accept and store sequences of commands and associated relative execution times.	Yes	
		3.2.1.8.2.4.2.c	Each command in the sequence shall be executed at the relative time associated with it, starting at the initiation time of the sequence.	Yes	
3.2.2.8.2.2.c	Spacecraft subsystems and components shall be commandable to known states regardless of their previous states.	3.2.1.3.1.1.a	Spacecraft Bus subsystems and components shall be commandable to known states regardless of earlier states.	Yes	
3.2.2.8.2.2.d	No commands which cause state changes which differ as a function of current state shall be required to achieve this.	3.2.1.3.1.2.a	Spacecraft Bus commands shall each have only one implementation.	Yes	
		3.2.1.3.1.2.b	The function initiated by any command shall not vary as a function of the existing state of the Spacecraft equipment executing the command.	Yes	
3.2.2.8.2.2.e	Spacecraft commands which have different functionality depending on current state (e.g., "toggle" commands) shall not be allowed.	3.2.1.3.1.2.a	Spacecraft Bus commands shall each have only one implementation.	Yes	

CEI Compliance to RD

RD Rqmt #	RD Requirement Text	CEI Rqmt #	CEI Rqmt Text	Comply	Compliance Comments
		3.2.1.3.1.2.b	The function initiated by any command shall not vary as a function of the existing state of the Spacecraft equipment executing the command.	Yes	
3.2.2.8.2.3	Engineering and Ancillary Data and Telemetry				
3.2.2.8.2.3.a	The spacecraft shall provide for the collection and distribution of engineering and ancillary data.	3.2.1.1.3.1.a	The Spacecraft Bus shall collect, and transmit to the ground, Instrument telemetry data.	Yes	
		3.2.1.3.2.a	The Spacecraft Bus shall collect and transmit to ground Spacecraft telemetry data.	Yes	
		3.2.1.3.2.2.2.a	The Spacecraft Bus shall be capable of gathering and transmitting telemetry during all modes employed after initial on-orbit communications with the ground have been established.	Yes	
		3.2.1.3.4.a	The Spacecraft Bus shall provide for the distribution of data between and within subsystems.	Yes	
		3.7.1.6.1.e	e. The generation and distribution of precise, accurate time and frequency references.	Yes	

CEI Compliance to RD

RD Rqmt #	RD Requirement Text	CEI Rqmt #	CEI Rqmt Text	Comply	Compliance Comments
		3.7.1.6.1.f	f. The onboard communication of digital data between and among the distributed hardware and software components of Spacecraft subsystems and between Spacecraft subsystems and instruments.	Yes	
		3.7.1.6.1.i	i. Accepting the SCC-based Flight Software Subsystem prepared and formatted ancillary data message, then replicating and delivering the ancillary data message to the onboard instruments and transmitting it to the ground for ground system use.	Yes	
		3.7.1.6.6.e	e. Between Spacecraft subsystems and Instruments.	Yes	
		3.7.1.6.8.a	The C&DHS shall accept formatted ancillary data messages from the FSWs.	Yes	
		3.7.1.6.8.b	The C&DHS shall accept command to enable and disable disemination of the ancillary data message.	Yes	
3.2.2.8.2.3.b	Time-tagged ancillary data shall be provided to instruments as required.	3.2.1.1.2.3.a	The Spacecraft Bus shall provide ancillary data to Instruments such that the age of any data at delivery will never exceed 2.048 (TBR-1) seconds.	Yes	

CEI Compliance to RD

RD Rqmt #	RD Requirement Text	CEI Rqmt #	CEI Rqmt Text	Comply	Compliance Comments
		3.7.1.4.7.e	The GN&CS-provided ancillary data shall be time-correlated such that validity times may be determined, and shall be provided within 0.5 seconds of the time of validity. Position data shall be time- correlated to 0.1 msec (0.8 meters equivalent). Attitude data shall be time-correlated to within 3 msec.	Yes	
		3.7.1.6.1.e	e. The generation and distribution of precise, accurate time and frequency references.	Yes	
		3.7.1.6.1.f	f. The onboard communication of digital data between and among the distributed hardware and software components of Spacecraft subsystems and between Spacecraft subsystems and instruments.	Yes	
		3.7.1.6.6.c	c. Within Spacecraft subsystems between software subsystem components.	Yes	
		3.7.1.10.6.a	The Flight Software System shall accept ancillary data generated by subsystems.	Yes	
		3.7.1.10.6.b	The FSWS shall provide the C&DHS with formatted ancillary data for distribution to the Instruments.	Yes	

CEI Compliance to RD

RD Rqmt #	RD Requirement Text	CEI Rqmt #	CEI Rqmt Text	Comply	Compliance Comments
		3.7.1.10.6.c	The FSWS shall provide ancillary data message to the C&DHS. The duration of FSWS processing of any data will never exceed .924 seconds.	Yes	
3.2.2.8.2.3.c	The spacecraft shall transmit engineering and safemode telemetry to the ground via the Communications subsystem.	3.2.1.1.3.1.a	The Spacecraft Bus shall collect, and transmit to the ground, Instrument telemetry data.	Yes	
		3.2.1.3.2.a	The Spacecraft Bus shall collect and transmit to ground Spacecraft telemetry data.	Yes	
		3.2.1.3.2.1.1.a	Spacecraft Bus communications return links shall contain housekeeping telemetry which includes:	Yes	
		3.2.1.3.2.1.1.k	j. Any Instrument provided telemetry.	Yes	
		3.2.1.3.2.2.1.a	The Spacecraft Bus shall transmit stored housekeeping telemetry data to the ground as commanded by the ground.	Yes	
		3.2.1.3.2.2.2.a	The Spacecraft Bus shall be capable of gathering and transmitting telemetry during all modes employed after initial on-orbit communications with the ground have been established.	Yes	

CEI Compliance to RD

RD Rqmt #	RD Requirement Text	CEI Rqmt #	CEI Rqmt Text	Comply	Compliance Comments
		3.2.1.7.1.4.a	The Spacecraft Bus shall be capable of transmitting and receiving data in accordance with the rates (which include all CCSDS overhead) shown in Tables V and VI. The Spacecraft Bus shall be capable of transmitting the data shown in the Table VI Usage column over the link specified by the associated Data Rate, Path, and Return Link Service Columns.	Yes	
		3.7.1.5.2.d	The COMS, when commanded to the proper state, shall transmit all valid data provided by C&DH for transmission to the ground.	Yes	
		3.7.1.5.5.a	The COMS shall support communications via the contingency and emergency links in all Spacecraft Modes during all Mission Phases following launch vehicle separation, in accordance with the antenna coverage requirements of Section 3.21.7.	Yes	
3.2.2.8.2.3.d	The transmitted telemetry shall include health and safety data, and indications of errors or anomalies within spacecraft subsystems.	3.2.1.3.2.1.1.a	Spacecraft Bus communications return links shall contain housekeeping telemetry which includes:	Yes	
		3.2.1.3.2.1.1.c	b. Data indicative of the current status of the on-board subsystems and Instruments,	Yes	

CEI Compliance to RD

RD Rqmt #	RD Requirement Text	CEI Rqmt #	CEI Rqmt Text	Comply	Compliance Comments
		3.2.1.3.2.1.1.d	c. Health and safety status data,	Yes	
		3.2.1.3.2.1.1.f	e. Indications of sensed failures or anomalies, if any,	Yes	
		3.2.1.3.2.1.1.i	h. Warning and advisory data, if any,	Yes	
		3.2.1.3.2.1.2.c	The Spacecraft shall also include this Health and Safety telemetry in the housekeeping telemetry stream.	Yes	
		3.7.1.1.8.2.2.c	Subsystem and component failures which threaten Spacecraft survival shall be detectable in health and safety telemetry.	Yes	
		3.7.1.1.8.2.4.a	The housekeeping telemetry provided by each subsystem shall allow ground controllers to assess the operational state of the subsystem, monitor critical subsystem function, and aid in fault detection and correction.	Yes	

CEI Compliance to RD

RD Rqmt #	RD Requirement Text	CEI Rqmt #	CEI Rqmt Text	Comply	Compliance Comments
		3.7.1.1.8.2.4.b	Subsystem Housekeeping telemetry shall, as a minimum, contain the following: (a) Redundancy status of the subsystem and components; (b) Health and safety status data; (c) Indications of resource usage; (d) Indications of sensed failures or anomalies, if any; (e) Data suitable for verifying execution of each Spacecraft command; (f) Notification of all autonomous switching between redundant paths.	Yes	
3.2.2.8.2.4	Uplink Data				
3.2.2.8.2.4.a	The spacecraft shall process, store, and distribute uplinked data to instruments and subsystems.	3.2.1.1.4.a	The Spacecraft Bus shall receive, validate, and deliver all Instrument commands	Yes	
		3.2.1.8.2.a	The Spacecraft shall accept commands for both real-time and stored command execution.	Yes	
		3.2.1.8.2.1.a	The Spacecraft Bus shall accept and process uplinked command data and computer memory load data at rates commensurate with the capacities of the ground-to-Spacecraft communications links.	Yes	

CEI Compliance to RD

RD Rqmt #	RD Requirement Text	CEI Rqmt #	CEI Rqmt Text	Comply	Compliance Comments
		3.7.1.6.1.a	THE C&DHS shall provide: a. Distribution of realtime and stored commands generated on the ground or by the onboard software.	Yes	
		3.7.1.6.2.a	The C&DHS shall accept, decode, and distribute command data transfers from the SCC-based FSWS Spacecraft elements.	Yes	
		3.7.1.6.2.b	The C&DHS shall accept and process all uplink command data transfers demodulated by COMS.	Yes	
		3.7.1.6.2.c	The C&DHS shall perform all functions associated with the validation and error control of the data received from the COMS, including the closure of any end-to-end retransmission protocols used on the forward links from the EOSDIS to the Spacecraft, in accordance with IS20008658.	Yes	
		3.7.1.6.2.d	The C&DHS shall distribute validated commands to the appropriate Spacecraft elements as identified by addressing information in the commands.	Yes	

CEI Compliance to RD

RD Rqmt #	RD Requirement Text	CEI Rqmt #	CEI Rqmt Text	Comply	Compliance Comments
		3.7.1.6.2.e	The C&DHS shall deliver to the designated destination all command from the FSWS within 100 msec of receipt by the C&DHS.	Yes	
		3.7.1.6.2.f	The C&DHS shall deliver to the designated destination all command data from the ground within 100 msec of receipt by the C&DHS.	Yes	
		3.7.1.6.2.g	The C&DHS shall receive processor load data via the normal command interfaces and distribute the load data to the destination Spacecraft element.	Yes	
3.2.2.8.2.5	Instrument Data				
3.2.2.8.2.5.a	C&DH processing for instrument data shall include formatting, multiplexing, and on-board storage.	3.2.1.2.2.1.a	The Spacecraft Bus shall format and multiplex Instrument data packets, along with the Spacecraft Bus-generated housekeeping telemetry packets and ancillary data packets, for transmission to the EOSDIS.	Yes	
		3.7.1.6.1.b	b. The periodic collection of Spacecraft Bus telemetry and instrument housekeeping telemetry and the formatting of these data for transmission to the ground and the onboard software.	Yes	

CEI Compliance to RD

RD Rqmt #	RD Requirement Text	CEI Rqmt #	CEI Rqmt Text	Comply	Compliance Comments
		3.7.1.6.1.d	d. The gathering, formatting, multiplexing, and recording of multiple streams of packetized instrument science data.	Yes	
		3.7.1.6.1.j	The C&DHS shall format all data streams to be transferred from the Spacecraft to the EOSDIS and shall provide these streams to the COMS.	Yes	
		3.7.1.6.3.c	The C&DHS shall sample, gather, format, and deliver to FSWS that data which the FSWS requires to control the Spacecraft.	Yes	
		3.7.1.6.4.a	The C&DHS shall format the science data in accordance with IS20008658.	Yes	
		3.7.1.6.4.b	The C&DHS, on command, shall format, encode as necessary, and forward to the COMS, for transmission via TDRSS KSA or DAS links, real-time science data streams at formatted data rates as needed to transmit the peak Instrument science data rates along with the ancillary and housekeeping telemetry data.	Yes	

CEI Compliance to RD

RD Rqmt #	RD Requirement Text	CEI Rqmt #	CEI Rqmt Text	Comply	Compliance Comments
		3.7.1.6.4.c	The C&DHS, on command, shall format, encode as necessary, and store for later playback, a science data stream at a formatted data rate sufficient to accommodate the aggregate of the Instrument science data rates along with the ancillary and housekeeping telemetry data.	Yes	
		3.7.1.6.4.f	For relaibility analysis purposes, the miniumum C&DHS science data processing capability for success shall be defined as the capability to format and record all science data, and play it back via either the TDRSS Ku-band or the DP links.	Yes	
3.2.2.8.2.5.b	Data to be processed shall be selectable by ground command.	3.2.1.3.2.1.6.a	The Spacecraft shall allow the on-orbit redefinition of housekeeping telemetry stream contents.	Yes	
		3.2.1.3.2.2.1.a	The Spacecraft Bus shall transmit stored housekeeping telemetry data to the ground as commanded by the ground.	Yes	

CEI Compliance to RD

RD Rqmt #	RD Requirement Text	CEI Rqmt #	CEI Rqmt Text	Comply	Compliance Comments
		3.7.1.6.4.b	The C&DHS, on command, shall format, encode as necessary, and forward to the COMS, for transmission via TDRSS KSA or DAS links, real-time science data streams at formatted data rates as needed to transmit the peak Instrument science data rates along with the ancillary and housekeeping telemetry data.	Yes	
		3.7.1.6.4.c	The C&DHS, on command, shall format, encode as necessary, and store for later playback, a science data stream at a formatted data rate sufficient to accommodate the aggregate of the Instrument science data rates along with the ancillary and housekeeping telemetry data.	Yes	
3.2.2.8.2.5.c	The C&DH subsystem shall forward streams of multiplexed instrument and subsystem data to the Communications subsystem for transmission to the ground.	3.2.1.1.3.1.a	The Spacecraft Bus shall collect, and transmit to the ground, Instrument telemetry data.	Yes	
		3.2.1.3.2.1.5.a	The Spacecraft shall incorporate the Ancillary Data Messages defined in the Command and Data Handling section of the GIIS into the science data stream along with the Housekeeping telemetry defined in 3.2.1.3.2.1.1 and the science data itself.	Yes	

CEI Compliance to RD

RD Rqmt #	RD Requirement Text	CEI Rqmt #	CEI Rqmt Text	Comply	Compliance Comments
		3.7.1.6.1.b	b. The periodic collection of Spacecraft Bus telemetry and instrument housekeeping telemetry and the formatting of these data for transmission to the ground and the onboard software.	Yes	
		3.7.1.6.1.c	c. Delivery of these formatted data to COMS and to the FSWS.	Yes	
		3.7.1.6.1.j	The C&DHS shall format all data streams to be transferred from the Spacecraft to the EOSDIS and shall provide these streams to the COMS.	Yes	
		3.7.1.6.1.k	All encoding (with the exception of convolutional encoding, which is performed by the COMS) of baseband data in these streams for the purpose of return link error control shall be performed by the C&DHS.	Yes	
		3.7.1.6.3.h	The C&DHS shall format all spacecraft telemetry in accordance with IS20008568 for delivery to the COMS.	Yes	
		3.7.1.6.3.l	The C&DHS shall transmit the telemetry data streams, the diagnostic data stream, and the playback data stream to the S-band transponder.	Yes	

CEI Compliance to RD

RD Rqmt #	RD Requirement Text	CEI Rqmt #	CEI Rqmt Text	Comply	Compliance Comments
		3.7.1.6.4.b	The C&DHS, on command, shall format, encode as necessary, and forward to the COMS, for transmission via TDRSS KSA or DAS links, real-time science data streams at formatted data rates as needed to transmit the peak Instrument science data rates along with the ancillary and housekeeping telemetry data.	Yes	
3.2.2.8.2.5.d	These streams shall contain real time data or stored data.	3.2.1.2.4.1.a	The Spacecraft Bus shall, on command, transmit real-time or stored science data to the ground.	Yes	
3.2.2.8.2.5.e	The C&DH subsystem shall be capable of storing data as it is being forwarded for real-time transmission.	3.2.1.2.4.3.a	The Spacecraft Bus shall be capable of simultaneously storing the science data and transmitting it to the EOSDIS in real time.	Yes	
3.2.2.8.2.5.f	The spacecraft shall be capable of nominally transmitting all instrument data to the ground within one orbit of acquisition.	3.7.1.6.4.e	The C&DHS shall, on command, playback and route the recorded data to the COMS at a final total bit transmission rate commensurate with the playback of a nominal orbit within a scheduled TDRSS total contact time of 20 minutes. The playback rate shall be within the constraints of the TDRSS SA service utlization and within the Spacecraft-level constraints on maximum link data rate.	Yes	

CEI Compliance to RD

RD Rqmt #	RD Requirement Text	CEI Rqmt #	CEI Rqmt Text	Comply	Compliance Comments
3.2.2.8.2.6	Application Software				
3.2.2.8.2.6.a	The spacecraft shall provide for the storage and execution of application software, and shall support the modification or reloading of software from the ground.	3.2.1.8.1.2.a	The Spacecraft Bus shall execute ground commands for redundancy switching and loading and dumping of software and of programmable data.	Yes	
		3.2.1.8.2.a	The Spacecraft shall accept commands for both real-time and stored command execution.	Yes	
		3.2.1.8.2.1.a	The Spacecraft Bus shall accept and process uplinked command data and computer memory load data at rates commensurate with the capacities of the ground-to-Spacecraft communications links.	Yes	
		3.2.1.8.2.4.a	The Spacecraft Bus shall provide both Absolute-Time and Relative-Time-Command Sequence (RTCS) stored command services.	Yes	
		3.2.1.8.2.4.1.a	The Spacecraft shall accept commands and associated execution times for Absolute-Time stored commanding.	Yes	
		3.2.1.8.2.4.2.a	The Spacecraft Bus shall accept and store sequences of commands and associated relative execution times.	Yes	

CEI Compliance to RD

RD Rqmt #	RD Requirement Text	CEI Rqmt #	CEI Rqmt Text	Comply	Compliance Comments
		3.2.1.8.2.4.2.b	Execution of these sequences shall be initiated by commands from flight software, and from the real-time and stored command services.	Yes	
		3.2.1.8.2.4.3.a	The Spacecraft shall allow the inspection and modification of stored commands and command sequences by ground controllers.	Yes	
		3.2.1.14.1.2.a	Spacecraft Bus components which comprise computer programs shall, where practical, be implemented as software and be reprogrammable on orbit.	Yes	
		3.7.1.6.1.g	g. Providing the processing and software resources required for the execution and storage of the programs and data belonging to the onboard subsystems.	Yes	
		3.7.1.6.3.a	Telemetry algorithms resident on-board the spacecraft shall be modifiable by ground control.	Yes	
		3.7.1.6.7.a	The C&DHS shall provide all computing devices required to provide memory storage and program execution services to SCC-based FSWS software.	Yes	

CEI Compliance to RD

RD Rqmt #	RD Requirement Text	CEI Rqmt #	CEI Rqmt Text	Comply	Compliance Comments
		3.7.1.6.7.b	The C&DHS shall, as a minimum, provide the following computing resources to FSWS software: (a) 1.5 MIPS DAIS throughput, and (b) 1 Mword processor memory for programs and data.	Yes	
		3.7.1.6.7.c	The C&DHS shall provide command services in support of modifications to loaded FSWS software.	Yes	
		3.7.1.6.7.d	The C&DHS shall provide telemetry services which allow ground controllers to inspect FSWS.	Yes	
		3.7.1.10.7.a	The FSWS shall accept and process uplinked command data and computer memory load data at rates commensurate with the capacities of the ground-to-Spacecraft communications links.	Yes	
3.2.2.8.2.6.b	The spacecraft shall be capable of restoring memory loads required for spacecraft survival, to allow subsequent recovery of operational capability.	3.2.1.13.1.4.a	The Spacecraft Bus shall maintain in non-volatile storage all computer memory loads which are critical to Spacecraft survival. These loads shall be available for use in initiation of mission operations and restoration of operations after anomalies.	Yes	

CEI Compliance to RD

RD Rqmt #	RD Requirement Text	CEI Rqmt #	CEI Rqmt Text	Comply	Compliance Comments
		3.7.1.1.11.a	Each subsystem containing code used to ensure Spacecraft survival shall maintain that code in non-volatile media for initiation or restoration after anomalies.	Yes	
		3.7.1.6.9.a	The C&DHS shall at all times and after all single failures be capable of accepting from the COMS and executing those commands needed to reconfigure on-board subsystems to restore normal operations. Command errors shall be incapable of compromising this capability.	Yes	
3.2.2.8.2.6.c	The spacecraft shall support integrity and revision checking for memory loads and modifications to those loads.	3.2.1.14.1.1.a	The Spacecraft Bus flight software shall incorporate provisions for verifying the integrity of and the revision of loaded software via telemetry.	Yes	
3.2.2.8.2.7	Time and Frequency References				
3.2.2.8.2.7.a	The Spacecraft shall provide time and frequency references to subsystems and instruments.	3.2.1.1.2.3.a	The Spacecraft Bus shall provide ancillary data to Instruments such that the age of any data at delivery will never exceed 2.048 (TBR-1) seconds.	Yes	
		3.7.1.6.1.e	e. The generation and distribution of precise, accurate time and frequency references.	Yes	

CEI Compliance to RD

RD Rqmt #	RD Requirement Text	CEI Rqmt #	CEI Rqmt Text	Comply	Compliance Comments
		3.7.1.6.5.a	The C&DHS shall accept the master frequency reference from the COMS.	Yes	
		3.7.1.6.5.b	The C&DHS shall propagate a master Spacecraft Clock synchronously with the master frequency reference.	Yes	
		3.7.1.6.5.c	The C&DHS shall support ground measurement of the Spacecraft Clock time via the USCCS, in accordance with NASA 531-TR-001. This includes providing telemetry data indicating the transmission time of telemetry stream synchronization patterns, and the receipt time of COMS-generated epoch signals.	Yes	
		3.7.1.6.5.d	The C&DHS shall accept and execute commands to set and adjust the Spacecraft Clock time.	Yes	
		3.7.1.6.5.e	Time information shall be presented in a format compatible with the CCSDS Day Segmented Time Code format defined in CCSDS 301.1-B-1.	Yes	
		3.7.1.6.5.f	C&DHS-provided time references and time tags shall have a resolution of 1 microsecond or finer. These times shall be accurate within 100 microseconds relative to Universal Time, Coordinated.	Yes	

CEI Compliance to RD

RD Rqmt #	RD Requirement Text	CEI Rqmt #	CEI Rqmt Text	Comply	Compliance Comments
3.2.2.8.2.8	Navigation Data				
3.2.2.8.2.8.a	The spacecraft shall distribute navigation data to subsystems and instruments as needed.	3.2.1.1.2.3.a	The Spacecraft Bus shall provide ancillary data to Instruments such that the age of any data at delivery will never exceed 2.048 (TBR-1) seconds.	Yes	
		3.2.1.3.4.a	The Spacecraft Bus shall provide for the distribution of data between and within subsystems.	Yes	
		3.7.1.4.7.a	The GN&CS shall derive all Spacecraft orbital position, velocity, attitude, and attitude error rate information for inclusion in ancillary data.	Yes	
		3.7.1.4.7.b	The GN&CS shall derive solar and lunar position information for inclusion in ancillary data.	Yes	
		3.7.1.6.1.f	f. The onboard communication of digital data between and among the distributed hardware and software components of Spacecraft subsystems and between Spacecraft subsystems and instruments.	Yes	

CEI Compliance to RD

RD Rqmt #	RD Requirement Text	CEI Rqmt #	CEI Rqmt Text	Comply	Compliance Comments
		3.7.1.6.1.i	i. Accepting the SCC-based Flight Software Subsystem prepared and formatted ancillary data message, then replicating and delivering the ancillary data message to the onboard instruments and transmitting it to the ground for ground system use.	Yes	
		3.7.1.6.5.c	The C&DHS shall support ground measurement of the Spacecraft Clock time via the USCCS, in accordance with NASA 531-TR-001. This includes providing telemetry data indicating the transmission time of telemetry stream synchronization patterns, and the receipt time of COMS-generated epoch signals.	Yes	
		3.7.1.6.6.a	The C&DHS shall be capable of providing data transport services in support of the following data transfers: a. Within Spacecraft subsystems between on-board subsystem hardware components which are not directly interconnected.	Yes	
		3.7.1.6.6.b	b. Within Spacecraft subsystems between hardware and software subsystem components.	Yes	

CEI Compliance to RD

RD Rqmt #	RD Requirement Text	CEI Rqmt #	CEI Rqmt Text	Comply	Compliance Comments
		3.7.1.6.6.c	c. Within Spacecraft subsystems between software subsystem components.	Yes	
		3.7.1.6.6.d	d. Between Spacecraft subsystems.	Yes	
		3.7.1.6.6.e	e. Between Spacecraft subsystems and Instruments.	Yes	
		3.7.1.10.6.a	The Flight Software System shall accept ancillary data generated by subsystems.	Yes	
		3.7.1.10.6.b	The FSWS shall provide the C&DHS with formatted ancillary data for distribution to the Instruments.	Yes	
		3.7.1.10.6.c	The FSWS shall provide ancillary data message to the C&DHS. The duration of FSWS processing of any data will never exceed .924 seconds.	Yes	
3.2.2.8.2.9	Safemode				
3.2.2.8.2.9.a	The spacecraft shall be capable of initiating the independent GN&C safe mode in response to ground command.	3.7.1.4.8.a	The GN&CS shall provide Safe Mode functions independent of the C&DHS that are automatically activated or ground activated and ground deactivated, during all post-separation mission phases to: a.) Reserved;	Yes	

CEI Compliance to RD

RD Rqmt #	RD Requirement Text	CEI Rqmt #	CEI Rqmt Text	Comply	Compliance Comments
		3.7.1.4.8.e	The GN&C shall, as a backup mode, determine and provide to PROPS via C&DHS, the hydrazine thruster command sequencing to maintain a power/thermal safe Earth-based attitude during all phases following launch vehicle seperation.	Yes	
		3.7.1.6.11.b	The C&DHS shall initiate Safe Mode entry immediately upon command from the ground.	Yes	
3.2.2.8.2.10	Instrument Support				
3.2.2.8.2.10.a	The spacecraft shall support planning and rescheduling by the ground system.	3.2.1.3.2.1.1.a	Spacecraft Bus communications return links shall contain housekeeping telemetry which includes:	Yes	
		3.2.1.3.2.1.1.b	a. Indication of the current Spacecraft System Mode,	Yes	
		3.2.1.3.2.1.1.c	b. Data indicative of the current status of the on-board subsystems and Instruments,	Yes	
		3.2.1.3.2.1.1.d	c. Health and safety status data,	Yes	
		3.2.1.3.2.1.1.f	e. Indications of sensed failures or anomalies, if any,	Yes	
		3.2.1.3.2.1.1.k	j. Any Instrument provided telemetry.	Yes	

CEI Compliance to RD

RD Rqmt #	RD Requirement Text	CEI Rqmt #	CEI Rqmt Text	Comply	Compliance Comments
3.2.2.8.2.10.b	The spacecraft shall support assessment on the ground of resource usage by instruments.	3.2.1.1.3.1.a	The Spacecraft Bus shall collect, and transmit to the ground, Instrument telemetry data.	Yes	
		3.2.1.3.2.1.1.e	d. Indications of resource usage,	Yes	
3.2.2.8.2.10.c	The Spacecraft shall support replanning for unique instrument targets of opportunity through ground planning.	3.2.1.1.2.1.a	The Spacecraft Bus shall permit the operation of each Instrument independent of that of other Instruments.	Yes	
3.2.2.8.2.11	System Support				
3.2.2.8.2.11.a	The spacecraft shall support the control of all onboard subsystems and shall support normal systems management functions, including the determination of spacecraft resource usage.	3.2.1.2.1.a	The Spacecraft Bus shall allow the uplink commanded reallocation of storage capacity	Yes	
		3.2.1.3.1.3.a	The Spacecraft Bus shall accept and execute commands received over any forward (command) link.	Yes	
		3.2.1.3.2.1.1.a	Spacecraft Bus communications return links shall contain housekeeping telemetry which includes:	Yes	
		3.2.1.3.2.1.1.b	a. Indication of the current Spacecraft System Mode,	Yes	
		3.2.1.3.2.1.1.c	b. Data indicative of the current status of the on-board subsystems and Instruments,	Yes	
		3.2.1.3.2.1.1.d	c. Health and safety status data,	Yes	

CEI Compliance to RD

RD Rqmt #	RD Requirement Text	CEI Rqmt #	CEI Rqmt Text	Comply	Compliance Comments
		3.2.1.3.2.1.1.e	d. Indications of resource usage,	Yes	
		3.2.1.3.2.1.1.f	e. Indications of sensed failures or anomalies, if any,	Yes	
		3.2.1.3.2.1.1.g	f. Data suitable for verifying execution of each Spacecraft command,	Yes	
		3.2.1.3.2.1.1.h	g. Notification of all autonomous switching between redundant paths,	Yes	
		3.2.1.3.2.1.1.i	h. Warning and advisory data, if any,	Yes	
		3.2.1.3.2.1.1.j	i. Periodic samples of the navigation/attitude state vector, and	Yes	
		3.2.1.3.2.1.1.k	j. Any Instrument provided telemetry.	Yes	
		3.2.1.8.1.2.a	The Spacecraft Bus shall execute ground commands for redundancy switching and loading and dumping of software and of programmable data.	Yes	
		3.2.1.8.2.a	The Spacecraft shall accept commands for both real-time and stored command execution.	Yes	
		3.7.1.1.8.1.a	Each subsystem shall accept, and execute upon receipt, commands delivered to it via the C&DHS.	Yes	

CEI Compliance to RD

RD Rqmt #	RD Requirement Text	CEI Rqmt #	CEI Rqmt Text	Comply	Compliance Comments
		3.7.1.1.8.2.2.a	The health and safety telemetry provided by each subsystem in all Spacecraft modes shall be sufficient to support all operations.	Yes	
		3.7.1.1.8.2.4.c	Each active Spacecraft subsystem shall provide, during all modes, telemetry points necessary for monitoring the operation of its hardware and software components.	Yes	
3.2.2.8.2.12	Direct Access Service				
3.2.2.8.2.12.a	The spacecraft shall be capable of collecting, and forwarding for transmission to the ground, streams of instrument and ancillary data for the Direct Access Service as shown in Table II.	3.2.1.7.5.a	The Spacecraft Bus shall provide a Direct Access Service (DAS), including a direct downlink (DDL), broadcast (DB), and playback (DP) capability for the Instruments as shown in Table VII.	Yes	
3.2.2.8.3	Performance Requirements				
3.2.2.8.3.1	General				
3.2.2.8.3.1.a	The spacecraft shall employ standardized interfaces to subsystems and instruments, and standardized data formats for all instrument command, telemetry, and data services.	3.2.4.3.1.a	The Spacecraft Bus shall utilize standardized hardware, software, data formats, and procedures to facilitate maintenance.	Yes	

CEI Compliance to RD

RD Rqmt #	RD Requirement Text	CEI Rqmt #	CEI Rqmt Text	Comply	Compliance Comments
		3.7.1.1.14.a	All subsystems and components shall, utilize the standard interfaces defined in the GIS, unless an exception to this is explicitly noted in its specification.	Yes	
3.2.2.8.3.1.b	The C&DH subsystem shall support the Communications subsystem capability for transmitting and receiving data as defined in Table III, IV, and V. Note that the transmission rates include all overhead (e.g. packetizing, encoding, framing, etc.).	3.2.1.7.1.4.a	The Spacecraft Bus shall be capable of transmitting and receiving data in accordance with the rates (which include all CCSDS overhead) shown in Tables V and VI. The Spacecraft Bus shall be capable of transmitting the data shown in the Table VI Usage column over the link specified by the associated Data Rate, Path, and Return Link Service Columns.	Yes	
		3.2.1.7.1.4.b	The TDRSS SSA HGA service shall support a 10 kbps forward link for Normal High Rate Commanding.	Yes	
		3.2.1.7.1.4.c	The TDRSS SMA HGA service shall support a 1 kbps forward link for Normal Low Rate Commanding.	Yes	
		3.2.1.7.1.4.d	The TDRSS SSA Omni service shall support a 125 kbps forward link for Contingency Commanding.	Yes	
		3.2.1.7.1.4.e	The GN S-band Omni service shall support a 2 kbps forward link for emergency commanding.	Yes	

CEI Compliance to RD

RD Rqmt #	RD Requirement Text	CEI Rqmt #	CEI Rqmt Text	Comply	Compliance Comments
		3.2.1.7.1.4.f	The hardline umbilical service shall support a 2 kbps forward link for pre-launch GSE commands.	Yes	
		3.2.1.7.1.4.g	The TDRSS KSA HGA service shall support a 75 kbps return link on both I and Q channels for real-time or playback of science data.	Yes	
		3.2.1.7.1.4.h	DB (X-Band) DAS service shall support a 12.5 Mbps return link on both I and Q channels for real-time direct broadcast of low-rate science data.	Yes	
		3.2.1.7.1.4.i	Real-time DB shall not be simultaneous with DP. It shall be on the I-channel only if DDL or DP' is active, otherwise the same data shall be I and Q channels.	Yes	
		3.2.1.7.1.4.j	The DAS DDL service shall support a 12.5 Mbps return link on the I channel and 105 kbps return link on the Q channel for real-time direct downlink of high-rate science data.	Yes	
		3.2.1.7.1.4.k	When the DAS DDL service is active, DB low-rate science data shall be on the I channel with the DDL high-rate data on the Q channel.	Yes	

CEI Compliance to RD

RD Rqmt #	RD Requirement Text	CEI Rqmt #	CEI Rqmt Text	Comply	Compliance Comments
		3.2.1.7.1.4.l	DAS DDL shall not be simultaneous with DP or DP'.	Yes	
		3.2.1.7.1.4.m	The DAS DP earth coverage service shall support a 75 kbps return link on both I and Q channels for playback of the science data records to provide a backup to the TDRSS KSA science data downlink.	Yes	
		3.2.1.7.1.4.n	The DP downlink data shall be bit-interleaved.	Yes	
		3.2.1.7.1.4.o	The DAS system shall support DP only. DAS DP shall not be simultaneous with DB, DP', OR DDL.	Yes	
		3.2.1.7.1.4.p	The DAS DP' service Shall support a 12.5 Mbps return link on the I channel and 105 kbps on the Q channel.	Yes	
		3.2.1.7.1.4.q	The DP downlink data shall be bit interleaved.	Yes	
		3.2.1.7.1.4.r	DAS DP' shall not be simultaneous with DP or DDL.	Yes	
		3.2.1.7.1.4.s	When DP' is active on the Q-channel only, DB may be on the I channel.	Yes	

CEI Compliance to RD

RD Rqmt #	RD Requirement Text	CEI Rqmt #	CEI Rqmt Text	Comply	Compliance Comments
		3.2.1.7.1.4.u	The TDRSS SSA HGA service shall support a 16 kbps I channel return link for housekeeping or diagnostic/dump telemetry and 256 kbps Q channel return link for housekeeping playback only.	Yes	
		3.2.1.7.1.4.v	The TDSRSS SSA Omni service shall support a 1 kbps Q channel. Health/Safety telemetry or Diagnostic/Dump for contingency.	Yes	
		3.2.1.7.1.4.w	The TDRSS SMA HGA service shall support a 16 kbps Q channel houskeeping telemetry.	Yes	
		3.2.1.7.1.4.x	The hardline umbilical service shall support a 16 kbps I and Q channel return link for pre-launch housekeeping and diagnostic/dump telemetry to GSE.	Yes	
		3.2.1.7.1.4.y	The hardline umbilical service shall support a 1 kbps I and Q channel return link for Launch/Ascent Health and Safety telemetry to Launch Vehicle.	Yes	

CEI Compliance to RD

RD Rqmt #	RD Requirement Text	CEI Rqmt #	CEI Rqmt Text	Comply	Compliance Comments
		3.2.1.7.1.4.y	The GN S-band Omni emergency link service shall support a 16 kbps data rate on the I channel for Housekeeping or Diagnostic/Dump data and a 512 kbps data rate on the Q channel for Housekeeping playback only.	Yes	
		3.2.1.7.1.4.z	The Gn S-Band Omni Service shall support an emergency 1 kbps Q&I channel return link for Health/Safety telemetry.	Yes	
		3.2.1.8.2.1.a	The Spacecraft Bus shall accept and process uplinked command data and computer memory load data at rates commensurate with the capacities of the ground-to-Spacecraft communications links.	Yes	
		3.7.1.6.1.k	All encoding (with the exception of convolutional encoding, which is performed by the COMS) of baseband data in these streams for the purpose of return link error control shall be performed by the C&DHS.	Yes	

CEI Compliance to RD

RD Rqmt #	RD Requirement Text	CEI Rqmt #	CEI Rqmt Text	Comply	Compliance Comments
		3.7.1.6.4.e	The C&DHS shall, on command, playback and route the recorded data to the COMS at a final total bit transmission rate commensurate with the playback of a nominal orbit within a scheduled TDRSS total contact time of 20 minutes. The playback rate shall be within the constraints of the TDRSS SA service utlization and within the Spacecraft-level constraints on maximum link data rate.	Yes	
3.2.2.8.3.1.c	The spacecraft shall be insensitive to the content of any data which is being transported.	3.2.1.8.1.4.a	The Spacecraft shall be insensitive to the data transported.	Yes	
3.2.2.8.3.1.d	The spacecraft shall be able to route, format, and apply forward error correction coding to real-time data to the SN.	3.2.1.2.2.2.a	The Spacecraft Bus shall meet Grade of Service 2 as defined in CCSDS 701.00_B_1 for all science data.	Yes	
		3.2.1.3.2.2.3.a	The Spacecraft Bus shall meet the same correctional coding requirements described for science data in 3.2.1.2.2.2.	Yes	

CEI Compliance to RD

RD Rqmt #	RD Requirement Text	CEI Rqmt #	CEI Rqmt Text	Comply	Compliance Comments
3.2.2.8.3.1.e	The final total (i.e., all framing overhead included) bit transmission rate shall support the instrument set and spacecraft-generated peak packet data rate and shall be within the constraints on the maximum link data rate in Table IV.	3.1.5.1.1.a	The Spacecraft Bus shall comply with the Instrument interface requirements specified in the General Instrument Interface Specification (GIIS), GSFC 420-03-02.	Yes	
		3.1.5.1.2.a	The Spacecraft Bus shall comply with the interface requirements of the EOS-AM Instrument set listed in Section 3.1.3, as described in the Unique Instrument Interface Documents (UIIDs). The Spacecraft Bus shall comply with the requirements of the UIIDs.	Yes	
		3.1.5.1.2.j	ASTER shall have a maximum 2-orbit average data rate of 8,300 kbps and a peak data rate of 89,200 kbps	Yes	
		3.1.5.1.2.k	MISR shall have a maximum 2-orbit average data rate of 4,000 kbps and a maximum peak data rate of 6,500 kbps.	Yes	
		3.1.5.1.2.l	MODIS shall have a maximum 2-orbit average data rate of 6,200 kbps and a maximum peak data rate of 11,000 kbps.	Yes	

CEI Compliance to RD

RD Rqmt #	RD Requirement Text	CEI Rqmt #	CEI Rqmt Text	Comply	Compliance Comments
		3.1.5.1.2.m	Each CERES shall have a maximum 1-orbit average data rate of 20 kbps and a maximum peak data rate of 20 kbps.	Yes	
		3.1.5.1.2.n	MOPITT shall have a maximum 2-orbit average data rate of 6 kbps and a maximum peak data rate of 6 kbps.	Yes	
		3.2.1.7.1.4.a	The Spacecraft Bus shall be capable of transmitting and receiving data in accordance with the rates (which include all CCSDS overhead) shown in Tables V and VI. The Spacecraft Bus shall be capable of transmitting the data shown in the Table VI Usage column over the link specified by the associated Data Rate, Path, and Return Link Service Columns.	Yes	
		3.2.1.7.1.4.g	The TDRSS KSA HGA service shall support a 75 kbps return link on both I and Q channels for real-time or playback of science data.	Yes	
		3.2.1.7.1.4.h	DB (X-Band) DAS service shall support a 12.5 Mbps return link on both I and Q channels for real-time direct broadcast of low-rate science data.	Yes	

CEI Compliance to RD

RD Rqmt #	RD Requirement Text	CEI Rqmt #	CEI Rqmt Text	Comply	Compliance Comments
		3.2.1.7.1.4.j	The DAS DDL service shall support a 12.5 Mbps return link on the I channel and 105 kbps return link on the Q channel for real-time direct downlink of high-rate science data.	Yes	
		3.2.1.7.1.4.m	The DAS DP earth coverage service shall support a 75 kbps return link on both I and Q channels for playback of the science data records to provide a backup to the TDRSS KSA science data downlink.	Yes	
		3.2.1.7.1.4.p	The DAS DP' service Shall support a 12.5 Mbps return link on the I channel and 105 kbps on the Q channel.	Yes	
		3.2.1.7.1.4.r	DAS DP' shall not be simultaneous with DP or DDL.	Yes	
		3.2.1.7.1.4.u	The TDRSS SSA HGA service shall support a 16 kbps I channel return link for housekeeping or diagnostic/dump telemetry and 256 kbps Q channel return link for housekeeping playback only.	Yes	
		3.2.1.7.1.4.v	The TDSRSS SSA Omni service shall support a 1 kbps Q channel. Health/Safety telemetry or Diagnostic/Dump for contingency.	Yes	

CEI Compliance to RD

RD Rqmt #	RD Requirement Text	CEI Rqmt #	CEI Rqmt Text	Comply	Compliance Comments
		3.2.1.7.1.4.w	The TDRSS SMA HGA service shall support a 16 kbps Q channel houskeeping telemetry.	Yes	
		3.2.1.7.1.4.x	The hardline umbilical service shall support a 16 kbps I and Q channel return link for pre-launch housekeeping and diagnostic/dump telemetry to GSE.	Yes	
		3.2.1.7.1.4.y	The hardline umbilical service shall support a 1 kbps I and Q channel return link for Launch/Ascent Health and Safety telemetry to Launch Vehicle.	Yes	
		3.2.1.7.1.4.z	The Gn S-Band Omni Service shall support an emergency 1 kbps Q&I channel return link for Health/Safety telemetry.	Yes	
		3.7.1.6.4.b	The C&DHS, on command, shall format, encode as necessary, and forward to the COMS, for transmission via TDRSS KSA or DAS links, real-time science data streams at formatted data rates as needed to transmit the peak Instrument science data rates along with the ancillary and housekeeping telemetry data.	Yes	

CEI Compliance to RD

RD Rqmt #	RD Requirement Text	CEI Rqmt #	CEI Rqmt Text	Comply	Compliance Comments
3.2.2.8.3.1.f	The spacecraft shall be capable of storing data for later playback.	3.2.1.2.3.a	The Spacecraft Bus shall be capable of storing at least 140 (TBR-2) Gbits of Instrument science data, ancillary data, and Spacecraft health and status data.	Yes	
		3.2.1.3.2.1.4.a	The Spacecraft Bus shall retain in storage at least four orbits of housekeeping telemetry data seleceted to support ground-based anomaly diagnosis.	Yes	
		3.7.1.6.4.c	The C&DHS, on command, shall format, encode as necessary, and store for later playback, a science data stream at a formatted data rate sufficient to accommodate the aggregate of the Instrument science data rates along with the ancillary and housekeeping telemetry data.	Yes	

CEI Compliance to RD

RD Rqmt #	RD Requirement Text	CEI Rqmt #	CEI Rqmt Text	Comply	Compliance Comments
3.2.2.8.3.1.g	The spacecraft shall be able to playback and route the recorded data to the SN at a final total bit transmission rate commensurate with the playback of a nominal orbit within the nominal scheduled TDRSS contact time for a single orbit.	3.7.1.6.4.e	The C&DHS shall, on command, playback and route the recorded data to the COMS at a final total bit transmission rate commensurate with the playback of a nominal orbit within a scheduled TDRSS total contact time of 20 minutes. The playback rate shall be within the constraints of the TDRSS SA service utlization and within the Spacecraft-level constraints on maximum link data rate.	Yes	
3.2.2.8.3.1.h	The playback rate shall be within the constraints of the TDRSS single access service utilization stated in 3.1.4.4.1 and within the constraints on maximum link data rate in Table IV.	3.7.1.6.4.e	The C&DHS shall, on command, playback and route the recorded data to the COMS at a final total bit transmission rate commensurate with the playback of a nominal orbit within a scheduled TDRSS total contact time of 20 minutes. The playback rate shall be within the constraints of the TDRSS SA service utlization and within the Spacecraft-level constraints on maximum link data rate.	Yes	
3.2.2.8.3.2	Commands				

CEI Compliance to RD

RD Rqmt #	RD Requirement Text	CEI Rqmt #	CEI Rqmt Text	Comply	Compliance Comments
3.2.2.8.3.2.a	The C&DH subsystem shall provide for real time command and control of the spacecraft, consistent with meeting spacecraft performance requirements.	3.2.1.1.4.a	The Spacecraft Bus shall receive, validate, and deliver all Instrument commands	Yes	
		3.2.1.3.1.3.a	The Spacecraft Bus shall accept and execute commands received over any forward (command) link.	Yes	
		3.2.1.8.2.a	The Spacecraft shall accept commands for both real-time and stored command execution.	Yes	
		3.2.1.8.2.1.a	The Spacecraft Bus shall accept and process uplinked command data and computer memory load data at rates commensurate with the capacities of the ground-to-Spacecraft communications links.	Yes	
		3.2.1.8.2.3.a	The Spacecraft shall distribute real-time commands within 1.024 second of receipt via the communications links elsewhere.	Yes	
		3.2.1.8.2.3.b	The Spacecraft Bus shall distribute commands in the same order received.	Yes	
		3.7.1.6.1.a	THE C&DHS shall provide: a. Distribution of realtime and stored commands generated on the ground or by the onboard software.	Yes	

CEI Compliance to RD

RD Rqmt #	RD Requirement Text	CEI Rqmt #	CEI Rqmt Text	Comply	Compliance Comments
		3.7.1.6.2.a	The C&DHS shall accept, decode, and distribute command data transfers from the SCC-based FSWS Spacecraft elements.	Yes	
		3.7.1.6.2.b	The C&DHS shall accept and process all uplink command data transfers demodulated by COMS.	Yes	
		3.7.1.6.2.d	The C&DHS shall distribute validated commands to the appropriate Spacecraft elements as identified by addressing information in the commands.	Yes	
		3.7.1.6.2.e	The C&DHS shall deliver to the designated destination all command from the FSWS within 100 msec of receipt by the C&DHS.	Yes	
		3.7.1.6.2.f	The C&DHS shall deliver to the designated destination all command data from the ground within 100 msec of receipt by the C&DHS.	Yes	

CEI Compliance to RD

RD Rqmt #	RD Requirement Text	CEI Rqmt #	CEI Rqmt Text	Comply	Compliance Comments
3.2.2.8.3.2.b	Interlock mechanisms shall be provided to prevent the inadvertent or unauthorized execution of hazardous commands.	3.3.5.2.3.a	The Spacecraft Bus shall incorporate safety interlock mechanisms implemented in hardware or software to prevent the execution of predefined commands which are potentially hazardous to personnel or to the Spacecraft without prior confirmation or arming by ground operators.	Yes	
3.2.2.8.3.2.c	When command frames are received from the Communications subsystem, the C&DH subsystem shall test each frame for errors.	3.2.1.8.2.2.a	The Spacecraft Bus shall accept FEC-coded uplinked data and transfer frames via the S-band forward links and shall perform Error Detection decoding.	Yes	
		3.7.1.6.2.c	The C&DHS shall perform all functions associated with the validation and error control of the data received from the COMS, including the closure of any end-to-end retransmission protocols used on the forward links from the EOSDIS to the Spacecraft, in accordance with IS20008658.	Yes	
3.2.2.8.3.2.d	Every frame which is found to contain an uncorrected error shall be rejected.	3.2.1.8.2.2.b	When errors are detected, the Spacecraft shall discard the erroneous data, notify the ground of the error and accept retransmission of the erroneous data in accordance with the COP-1 protocol.	Yes	

CEI Compliance to RD

RD Rqmt #	RD Requirement Text	CEI Rqmt #	CEI Rqmt Text	Comply	Compliance Comments
3.2.2.8.3.2.e	The spacecraft shall report rejected frames to the ground.	3.2.1.8.2.2.b	When errors are detected, the Spacecraft shall discard the erroneous data, notify the ground of the error and accept retransmission of the erroneous data in accordance with the COP-1 protocol.	Yes	
3.2.2.8.3.2.f	The spacecraft shall provide storaging commands, with associated time tags, for 24 hours of operations.	3.2.1.8.2.4.1.c	The Spacecraft Bus shall be capable of storing at least 3000 Absolute-Time stored commands per day.	Yes	
3.2.2.8.3.3	Engineering and Ancillary Data and Telemetry				
3.2.2.8.3.3.a	Engineering and ancillary data shall be supplied in a consistent format in packet form.	3.2.1.2.2.1.a	The Spacecraft Bus shall format and multiplex Instrument data packets, along with the Spacecraft Bus-generated housekeeping telemetry packets and ancillary data packets, for transmission to the EOSDIS.	Yes	
3.2.2.8.3.3.b	The ancillary data shall include navigation state (attitude, orbit, and time) information.	3.2.1.3.2.1.1.a	Spacecraft Bus communications return links shall contain housekeeping telemetry which includes:	Yes	
		3.2.1.3.2.1.1.j	i. Periodic samples of the navigation/attitude state vector, and	Yes	

CEI Compliance to RD

RD Rqmt #	RD Requirement Text	CEI Rqmt #	CEI Rqmt Text	Comply	Compliance Comments
		3.7.1.4.7.a	The GN&CS shall derive all Spacecraft orbital position, velocity, attitude, and attitude error rate information for inclusion in ancillary data.	Yes	
		3.7.1.4.7.e	The GN&CS-provided ancillary data shall be time-correlated such that validity times may be determined, and shall be provided within 0.5 seconds of the time of validity. Position data shall be time- correlated to 0.1 msec (0.8 meters equivalent). Attitude data shall be time-correlated to within 3 msec.	Yes	
3.2.2.8.3.3.c	The spacecraft shall be capable of storing up to two orbits of selected engineering data in a non-volatile medium in order to support ground-based anomaly diagnosis.	3.2.1.3.2.1.4.a	The Spacecraft Bus shall retain in storage at least four orbits of housekeeping telemetry data seleceted to support ground-based anomaly diagnosis.	Yes	
3.2.2.8.3.3.e	Playback rates of this data shall be compatible with the TDRSS SSA and GN/DSN/WTS downlinks.	3.2.1.3.2.2.1.a	The Spacecraft Bus shall transmit stored housekeeping telemetry data to the ground as commanded by the ground.	Yes	

CEI Compliance to RD

RD Rqmt #	RD Requirement Text	CEI Rqmt #	CEI Rqmt Text	Comply	Compliance Comments
		3.2.1.7.1.4.a	The Spacecraft Bus shall be capable of transmitting and receiving data in accordance with the rates (which include all CCSDS overhead) shown in Tables V and VI. The Spacecraft Bus shall be capable of transmitting the data shown in the Table VI Usage column over the link specified by the associated Data Rate, Path, and Return Link Service Columns.	Yes	
		3.2.1.7.1.4.g	The TDRSS KSA HGA service shall support a 75 kbps return link on both I and Q channels for real-time or playback of science data.	Yes	
		3.2.1.7.1.4.r	DAS DP' shall not be simultaneous with DP or DDL.	Yes	
		3.2.1.7.1.4.u	The TDRSS SSA HGA service shall support a 16 kbps I channel return link for housekeeping or diagnostic/dump telemetry and 256 kbps Q channel return link for housekeeping playback only.	Yes	
		3.2.1.7.1.4.v	The TDSRSS SSA Omni service shall support a 1 kbps Q channel. Health/Safety telemetry or Diagnostic/Dump for contingency.	Yes	

CEI Compliance to RD

RD Rqmt #	RD Requirement Text	CEI Rqmt #	CEI Rqmt Text	Comply	Compliance Comments
		3.2.1.7.1.4.w	The TDRSS SMA HGA service shall support a 16 kbps Q channel houskeeping telemetry.	Yes	
		3.2.1.7.1.4.x	The hardline umbilical service shall support a 16 kbps I and Q channel return link for pre-launch housekeeping and diagnostic/dump telemetry to GSE.	Yes	
		3.2.1.7.1.4.y	The hardline umbilical service shall support a 1 kbps I and Q channel return link for Launch/Ascent Health and Safety telemetry to Launch Vehicle.	Yes	
		3.2.1.7.1.4.z	The Gn S-Band Omni Service shall support an emergency 1 kbps Q&I channel return link for Health/Safety telemetry.	Yes	
3.2.2.8.3.3.f	The spacecraft shall provide the capability to distribute instrument health and safety data as part of the engineering telemetry stream.	3.2.1.1.3.1.a	The Spacecraft Bus shall collect, and transmit to the ground, Instrument telemetry data.	Yes	
		3.2.1.3.2.1.2.c	The Spacecraft shall also include this Health and Safety telemetry in the housekeeping telemetry stream.	Yes	
3.2.2.8.3.4	Uplink Data				

CEI Compliance to RD

RD Rqmt #	RD Requirement Text	CEI Rqmt #	CEI Rqmt Text	Comply	Compliance Comments
3.2.2.8.3.4.a	The spacecraft shall be capable of accepting and processing uplinked data received at rates shown in Table III.	3.2.1.7.1.4.a	The Spacecraft Bus shall be capable of transmitting and receiving data in accordance with the rates (which include all CCSDS overhead) shown in Tables V and VI. The Spacecraft Bus shall be capable of transmitting the data shown in the Table VI Usage column over the link specified by the associated Data Rate, Path, and Return Link Service Columns.	Yes	
		3.2.1.7.1.4.b	The TDRSS SSA HGA service shall support a 10 kbps forward link for Normal High Rate Commanding.	Yes	
		3.2.1.7.1.4.c	The TDRSS SMA HGA service shall support a 1 kbps forward link for Normal Low Rate Commanding.	Yes	
		3.2.1.7.1.4.d	The TDRSS SSA Omni service shall support a 125 kbps forward link for Contingency Commanding.	Yes	
		3.2.1.7.1.4.e	The GN S-band Omni service shall support a 2 kbps forward link for emergency commanding.	Yes	
		3.2.1.7.1.4.f	The hardline umbilical service shall support a 2 kbps forward link for pre-launch GSE commands.	Yes	

CEI Compliance to RD

RD Rqmt #	RD Requirement Text	CEI Rqmt #	CEI Rqmt Text	Comply	Compliance Comments
		3.2.1.8.2.1.a	The Spacecraft Bus shall accept and process uplinked command data and computer memory load data at rates commensurate with the capacities of the ground-to-Spacecraft communications links.	Yes	
3.2.2.8.3.5	Instrument Science Data				
3.2.2.8.3.5.a	The spacecraft shall accept science data from the instruments at the aggregate peak and averaged data rates defined in the UIIDs.	3.1.5.1.2.a	The Spacecraft Bus shall comply with the interface requirements of the EOS-AM Instrument set listed in Section 3.1.3, as described in the Unique Instrument Interface Documents (UIIDs). The Spacecraft Bus shall comply with the requirements of the UIIDs.	Yes	
		3.1.5.1.2.b	If the UIIDs and the GIIS conflict, the UIIDs shall govern.	Yes	
		3.1.5.1.2.c	UIID Instrument parameters defined below shall be assumed for Spacecraft Bus design activities.	Yes	
		3.1.5.1.2.j	ASTER shall have a maximum 2-orbit average data rate of 8,300 kbps and a peak data rate of 89,200 kbps	Yes	

CEI Compliance to RD

RD Rqmt #	RD Requirement Text	CEI Rqmt #	CEI Rqmt Text	Comply	Compliance Comments
		3.1.5.1.2.k	MISR shall have a maximum 2-orbit average data rate of 4,000 kbps and a maximum peak data rate of 6,500 kbps.	Yes	
		3.1.5.1.2.l	MODIS shall have a maximum 2-orbit average data rate of 6,200 kbps and a maximum peak data rate of 11,000 kbps.	Yes	
		3.1.5.1.2.m	Each CERES shall have a maximum 1-orbit average data rate of 20 kbps and a maximum peak data rate of 20 kbps.	Yes	
		3.1.5.1.2.n	MOPITT shall have a maximum 2-orbit average data rate of 6 kbps and a maximum peak data rate of 6 kbps.	Yes	
3.2.2.8.3.5.b	The C&DH subsystem shall be capable of collecting and/or recording multiple channels of instrument and engineering data at rates defined in 420-03-02, the General Instrument Interface Specificaiton (GIIS).	3.1.5.1.1.a	The Spacecraft Bus shall comply with the Instrument interface requirements specified in the General Instrument Interface Specification (GIIS), GSFC 420-03-02.	Yes	

CEI Compliance to RD

RD Rqmt #	RD Requirement Text	CEI Rqmt #	CEI Rqmt Text	Comply	Compliance Comments
3.2.2.8.3.5.c	The spacecraft shall provide data interfaces to instruments as required by the UIIDs.	3.1.5.1.2.a	The Spacecraft Bus shall comply with the interface requirements of the EOS-AM Instrument set listed in Section 3.1.3, as described in the Unique Instrument Interface Documents (UIIDs). The Spacecraft Bus shall comply with the requirements of the UIIDs.	Yes	
		3.1.5.1.2.b	If the UIIDs and the GIIS conflict, the UIIDs shall govern.	Yes	
		3.1.5.1.2.c	UIID Instrument parameters defined below shall be assumed for Spacecraft Bus design activities.	Yes	
		3.1.5.1.2.o	The spacecraft shall provide 4 high-rate interfaces to accommodate ASTER science data.	Yes	
		3.1.5.1.2.p	The spacecraft shall provide 1 high-rate interface to accommodate MISR science data.	Yes	
		3.1.5.1.2.q	The spacecraft shall provide 1 high-rate interface to accommodate MODIS science data.	Yes	
		3.1.5.1.2.r	The spacecraft shall provide 2 low-rate interface to accommodate CERES science data.	Yes	

CEI Compliance to RD

RD Rqmt #	RD Requirement Text	CEI Rqmt #	CEI Rqmt Text	Comply	Compliance Comments
		3.1.5.1.2.s	The spacecraft shall provide 1 low-rate interface to accommodate MOPITT science data.	Yes	
		3.1.5.1.2.t	The spacecraft shall provide 2 point-to-point command and telemetry interface sets, 1 command and telemetry bus interface, and 1 time mark and frequency bus interface to support ASTER operations.	Yes	
		3.1.5.1.2.u	The spacecraft shall provide 1 point-to-point command and telemetry interface sets, 1 command and telemetry bus interface, and 1 time mark and frequency bus interface to support MISR operations.	Yes	
		3.1.5.1.2.v	The spacecraft shall provide 1 point-to-point command and telemetry interface sets, 1 command and telemetry bus interface, and 1 time mark and frequency bus interface to support MODIS operations.	Yes	
		3.1.5.1.2.w	The spacecraft shall provide 2 point-to-point command and telemetry interface sets, 2 command and telemetry bus interface, and 2 time mark and frequency bus interface to support CERES operations.	Yes	

CEI Compliance to RD

RD Rqmt #	RD Requirement Text	CEI Rqmt #	CEI Rqmt Text	Comply	Compliance Comments
		3.1.5.1.2.x	The spacecraft shall provide 1 point-to-point command and telemetry interface sets, 1 command and telemetry bus interface, and 1 time mark and frequency bus interface to support MOPITT operations.	Yes	
3.2.2.8.3.5.d	The C&DH subsystem shall accommodate the pre-launch selection of different virtual channel and instrument configurations on the space-to-ground and space-to-space links.	9.9.9.9.b	No-match in Contract End Item Specification PS20005386	No	Missing from CEI
3.2.2.8.3.5.e	Prior to launch, the spacecraft shall have the flexibility to assign virtual channels to different instrument high-rate data lines to accommodate the instruments.	9.9.9.9.b	No-match in Contract End Item Specification PS20005386	No	Missing from CEI
3.2.2.8.3.5.f	During science operations, the spacecraft shall not cause the loss (i.e., dropped bits, fragmented transfer frames, etc.) of any instrument data other than random bit errors.	3.2.1.2.4.4.a	During science operations, the Spacecraft Bus shall not cause the loss (i.e. dropped bits, fragmented transfer frames, etc.) of any Instrument science data other than that due to random bit errors.	Yes	

CEI Compliance to RD

RD Rqmt #	RD Requirement Text	CEI Rqmt #	CEI Rqmt Text	Comply	Compliance Comments
3.2.2.8.3.5.i	Spacecraft on-board random bit error mechanisms shall contribute no more than 10% of the end-to-end bit error rate (BER) for Quality of Service II, as defined in the Consultative Committee for Space Data Systems (CCSDS) Recommendation for Advanced Orbiting Systems, Networks and Data Links: Summary of Concept, Rationale and Performance, CCSDS Document Number CCSDS 700.0-G-2, Green Book.	3.2.1.2.5.a	The spacecraft Bus Shall contreibute no more that 10E-7 (TBR-3) bit errors/bit BER to the insturment science collected during any orbit, when measured between the insturment interface and the output on the ground of the CCDS Grade 2 processing. This does not include the BER, included by the communications links external to the Spacecraft.	Yes	
3.2.2.8.3.6	On-Board Data Recording				
3.2.2.8.3.6.a	The spacecraft shall be capable of storing at least 140 Gbits of data at the end of life.	3.2.1.2.3.a	The Spacecraft Bus shall be capable of storing at least 140 (TBR-2) Gbits of Instrument science data, ancillary data, and Spacecraft health and status data.	Yes	
3.2.2.8.3.7	Time and Frequency References				
3.2.2.8.3.7.a	Time references and time tagging of data shall have a resolution of 1 microsecond or smaller.	3.7.1.6.5.f	C&DHS-provided time references and time tags shall have a resolution of 1 microsecond or finer. These times shall be accurate within 100 microseconds relative to Universal Time, Coordinated.	Yes	

CEI Compliance to RD

RD Rqmt #	RD Requirement Text	CEI Rqmt #	CEI Rqmt Text	Comply	Compliance Comments
3.2.2.8.3.7.b	The time reference shall be continuous.	3.7.1.6.1.e	e. The generation and distribution of precise, accurate time and frequency references.	Yes	
		3.7.1.6.5.b	The C&DHS shall propagate a master Spacecraft Clock synchronously with the master frequency reference.	Yes	
3.2.2.8.3.7.c	The time reference shall be accurate within 100 microseconds.	3.7.1.6.5.f	C&DHS-provided time references and time tags shall have a resolution of 1 microsecond or finer. These times shall be accurate within 100 microseconds relative to Universal Time, Coordinated.	Yes	
3.2.2.8.3.7.d	The spacecraft shall maintain the time reference and accept periodic time correction updates from the ground.	3.2.1.4.1.1.a	The Spacecraft Bus shall receive timing signals from the ground via TDRSS satellites and shall process these signals to allow ground measurment of errors in the spacecraft clock using the User Spacercraft Clock Calibration System (USCCS).	Yes	
		3.7.1.6.5.b	The C&DHS shall propagate a master Spacecraft Clock synchronously with the master frequency reference.	Yes	
		3.7.1.6.5.d	The C&DHS shall accept and execute commands to set and adjust the Spacecraft Clock time.	Yes	

CEI Compliance to RD

RD Rqmt #	RD Requirement Text	CEI Rqmt #	CEI Rqmt Text	Comply	Compliance Comments
3.2.2.8.3.7.e	The time reference shall be maintained relative to an arbitrary ground reference (such as UTC).	3.7.1.6.5.f	C&DHS-provided time references and time tags shall have a resolution of 1 microsecond or finer. These times shall be accurate within 100 microseconds relative to Universal Time, Coordinated.	Yes	
3.2.2.8.3.7.f	Time information shall be presented in a format selected from CCSDS 301.0-B-1, Time Code Formats.	3.7.1.6.5.e	Time information shall be presented in a format compatible with the CCSDS Day Segmented Time Code format defined in CCSDS 301.1-B-1.	Yes	
3.2.2.8.3.8	Navigation Data				
3.2.2.8.3.8.a	Navigation data shall be supplied to instruments and subsystems with a latency not to exceed TBD (1.0) seconds.	3.2.1.1.2.3.a	The Spacecraft Bus shall provide ancillary data to Instruments such that the age of any data at delivery will never exceed 2.048 (TBR-1) seconds.	Yes	
		3.2.1.4.2.3.a	The Spacecraft Bus shall accept ground determined, uplinked navigation data and shall use it on command.	Yes	
		9.9.9.9.f	No-match in Contract End Item Specification PS20005386	No	Recommend that GSFC close TBD and change requirement to 2.048 sec.

CEI Compliance to RD

RD Rqmt #	RD Requirement Text	CEI Rqmt #	CEI Rqmt Text	Comply	Compliance Comments
3.2.2.8.3.9	Instrument Support				
3.2.2.8.3.9.a	The spacecraft shall permit instrument operations which are independent of each other.	3.2.1.1.2.1.a	The Spacecraft Bus shall permit the operation of each Instrument independent of that of other Instruments.	Yes	
3.2.2.8.3.9.b	The spacecraft shall provide for reallocation of data resources to meet instrument priorities.	3.2.1.2.1.a	The Spacecraft Bus shall allow the uplink commanded reallocation of storage capacity	Yes	
3.2.2.8.3.9.c	The spacecraft shall, in response to emergency conditions, be capable of reconfiguring instrument operations by initiating execution of pre-planned commands.	3.1.5.1.1.a	The Spacecraft Bus shall comply with the Instrument interface requirements specified in the General Instrument Interface Specification (GIIS), GSFC 420-03-02.	Yes	
		3.2.1.8.1.2.a	The Spacecraft Bus shall execute ground commands for redundancy switching and loading and dumping of software and of programmable data.	Yes	
		3.2.1.13.3.2.3.b	The Spacecraft Bus shall be capable of issuing predefined command sequences in response to selected anomalous conditions that do not require entry into a safe configuration.	Yes	

CEI Compliance to RD

RD Rqmt #	RD Requirement Text	CEI Rqmt #	CEI Rqmt Text	Comply	Compliance Comments
		3.7.1.6.9.a	The C&DHS shall at all times and after all single failures be capable of accepting from the COMS and executing those commands needed to reconfigure on-board subsystems to restore normal operations. Command errors shall be incapable of compromising this capability.	Yes	
3.2.2.8.3.9.d	The spacecraft shall support instrument loading, readout, or dumps of on-board instrument-provided computers which meet C&DH interface requirements.	3.1.5.1.1.a	The Spacecraft Bus shall comply with the Instrument interface requirements specified in the General Instrument Interface Specification (GIIS), GSFC 420-03-02.	Yes	
		3.2.1.8.1.2.a	The Spacecraft Bus shall execute ground commands for redundancy switching and loading and dumping of software and of programmable data.	Yes	
		3.2.1.8.2.4.3.a	The Spacecraft shall allow the inspection and modification of stored commands and command sequences by ground controllers.	Yes	
		3.7.1.6.1.h	h. The input and output of data from/to subsystem sensors/effectors and instruments, including appropriate signal conditioning and conversion of signals between the analog and digital domains.	Yes	

CEI Compliance to RD

RD Rqmt #	RD Requirement Text	CEI Rqmt #	CEI Rqmt Text	Comply	Compliance Comments
		3.7.1.6.2.g	The C&DHS shall receive processor load data via the normal command interfaces and distribute the load data to the destination Spacecraft element.	Yes	
3.2.2.8.3.10	System Support				
3.2.2.8.3.10.a	The spacecraft shall permit ground controllers to monitor spacecraft functions and to override automated controls in the event of an emergency.	3.2.1.3.2.1.1.a	Spacecraft Bus communications return links shall contain housekeeping telemetry which includes:	Yes	
		3.2.1.3.2.1.1.b	a. Indication of the current Spacecraft System Mode,	Yes	
		3.2.1.3.2.1.1.c	b. Data indicative of the current status of the on-board subsystems and Instruments,	Yes	
		3.2.1.3.2.1.1.d	c. Health and safety status data,	Yes	
		3.2.1.3.2.1.1.e	d. Indications of resource usage,	Yes	
		3.2.1.3.2.1.1.f	e. Indications of sensed failures or anomalies, if any,	Yes	
		3.2.1.3.2.1.1.g	f. Data suitable for verifying execution of each Spacecraft command,	Yes	
		3.2.1.3.2.1.1.h	g. Notification of all autonomous switching between redundant paths,	Yes	
		3.2.1.3.2.1.1.i	h. Warning and advisory data, if any,	Yes	

CEI Compliance to RD

RD Rqmt #	RD Requirement Text	CEI Rqmt #	CEI Rqmt Text	Comply	Compliance Comments
		3.2.1.3.2.1.1.j	i. Periodic samples of the navigation/attitude state vector, and	Yes	
		3.2.1.3.2.1.1.k	j. Any Instrument provided telemetry.	Yes	
		3.7.1.1.8.1.5.a	All subsystems shall accept and execute commands to override or inhibit the execution of autonomous functions which may interfere with Spacecraft operations or jeopardize the health of the Spacecraft.	Yes	
		3.7.1.6.9.a	The C&DHS shall at all times and after all single failures be capable of accepting from the COMS and executing those commands needed to reconfigure on-board subsystems to restore normal operations. Command errors shall be incapable of compromising this capability.	Yes	
3.2.2.8.3.11	Reserved				
3.2.2.8.3.12	Communications Standards				

CEI Compliance to RD

RD Rqmt #	RD Requirement Text	CEI Rqmt #	CEI Rqmt Text	Comply	Compliance Comments
3.2.2.8.3.12.a	Spacecraft Ku-Band and S-Band normal space/ground return communications shall conform to the Consultative Committee for Space Data Systems (CCSDS) Recommendation for Advanced Orbiting Systems (AOS), Networks and Data Links: Architectural Specification, CCSDS Document Number CCSDS 701.00-B-1, Blue Book Issue-1, dated October 1989.	3.2.1.8.1.3.a	They shall comply with the recommendations of the Consultative Committee for Space Data Systems (CCSDS) as follows: K-Band return ans S-Band Return-CCSDS 701.00-B-1,Grade 2; S-Band Forward-CCSDS 201.0-B-1, CCSDS 202-B-1 (COP-1), CCSDS 203.0-B-1; and CCSDS 301.0-B-1, Time Code Formats using day segmented binary milestones and microseconds.	Yes	
3.2.2.8.3.12.b	Spacecraft S-Band normal space/ground forward communications shall conform to the CCSDS Recommendations for Telecommand, Parts 1-3, CCSDS Document Numbers CCSDS 201.0-B-1, 202.0-B-1, and 203.0-B-1, Blue Books, dated January 1987.	3.2.1.8.1.3.a	They shall comply with the recommendations of the Consultative Committee for Space Data Systems (CCSDS) as follows: K-Band return ans S-Band Return-CCSDS 701.00-B-1,Grade 2; S-Band Forward-CCSDS 201.0-B-1, CCSDS 202-B-1 (COP-1), CCSDS 203.0-B-1; and CCSDS 301.0-B-1, Time Code Formats using day segmented binary milestones and microseconds.	Yes	

CEI Compliance to RD

RD Rqmt #	RD Requirement Text	CEI Rqmt #	CEI Rqmt Text	Comply	Compliance Comments
3.2.2.8.3.12.c	These CCSDS recommendations shall apply to the space/ground communications channels and to the basic space/ground services provided to instruments by the spacecraft.	3.2.1.8.1.3.a	They shall comply with the recommendations of the Consultative Committee for Space Data Systems (CCSDS) as follows: K-Band return ans S-Band Return-CCSDS 701.00-B-1,Grade 2; S-Band Forward-CCSDS 201.0-B-1, CCSDS 202-B-1 (COP-1), CCSDS 203.0-B-1; and CCSDS 301.0-B-1, Time Code Formats using day segmented binary milestones and microseconds.	Yes	
3.2.2.8.3.12.1	CCSDS AOS Services				
3.2.2.8.3.12.1.a	The spacecraft shall provide the Path Packet service with Grade of Service 2 in conformance to the above CCSDS AOS recommendations.	3.2.1.2.2.1.b	This processing shall be in accordance with the Path Packet Service as defined in CCSDS 701.00-B-1.	Yes	
		3.2.1.2.2.2.a	The Spacecraft Bus shall meet Grade of Service 2 as defined in CCSDS 701.00_B_1 for all science data.	Yes	

CEI Compliance to RD

RD Rqmt #	RD Requirement Text	CEI Rqmt #	CEI Rqmt Text	Comply	Compliance Comments
3.2.2.8.3.12.1.b	Providing this service in conformance with the AOS recommendations shall be defined to include supporting all instrument data structures that conform to the Path Packet Service specifications (i.e. correctly formatted CCSDS Version-1 Packets of any valid length up to a Project-specified maximum, as per CCSDS AOS Sections 3.1.b and 3.2.2.c).	3.2.1.2.2.1.a	The Spacecraft Bus shall format and multiplex Instrument data packets, along with the Spacecraft Bus-generated housekeeping telemetry packets and ancillary data packets, for transmission to the EOSDIS.	Yes	
		3.2.1.2.2.1.b	This processing shall be in accordance with the Path Packet Service as defined in CCSDS 701.00-B-1.	Yes	
		3.2.1.2.2.2.a	The Spacecraft Bus shall meet Grade of Service 2 as defined in CCSDS 701.00_B_1 for all science data.	Yes	
3.2.2.8.3.12.2	CCSDS Telecommand Services				
3.2.2.8.3.12.2.a	To support forward link transmission, the spacecraft and ground system shall implement Command Operation Procedure number 1 (COP-1).	3.2.1.8.1.3.a	They shall comply with the recommendations of the Consultative Committee for Space Data Systems (CCSDS) as follows: K-Band return ans S-Band Return-CCSDS 701.00-B-1,Grade 2; S-Band Forward-CCSDS 201.0-B-1, CCSDS 202-B-1 (COP-1), CCSDS 203.0-B-1; and CCSDS 301.0-B-1, Time Code Formats using day segmented binary milestones and microseconds.	Yes	

CEI Compliance to RD

RD Rqmt #	RD Requirement Text	CEI Rqmt #	CEI Rqmt Text	Comply	Compliance Comments
3.2.2.8.3.13	Processor Resource Margins				
3.2.2.8.3.13.a	Processors which provide computing resources for spacecraft subsystems shall be sized such that, at launch, in the normal spacecraft operating modes, the following margins (measured as a percentage of the total available resource) are maintained: (1) 50% of the instruction execution capacity (i.e. throughput);	3.2.1.14.2.5.a	All Spacecraft Bus software shall comply with the maximum utlization requirements set forth in Table VIII at the times of the various listed events.	Yes	
		3.2.1.14.2.5.b	All Spacecraft Bus firmware shall comply with the maximum utlization requirements set forth in Table IX at the times of the various listed events.	Yes	
3.2.2.8.3.13.b	(2) 50% of the Input/Output(I/O) bandwidth; and	3.2.1.14.2.5.a	All Spacecraft Bus software shall comply with the maximum utlization requirements set forth in Table VIII at the times of the various listed events.	Yes	
		3.2.1.14.2.5.b	All Spacecraft Bus firmware shall comply with the maximum utlization requirements set forth in Table IX at the times of the various listed events.	Yes	
3.2.2.8.3.13.c	(3) 40% of the Random-Access Memory (RAM) capacity.	3.2.1.14.2.5.a	All Spacecraft Bus software shall comply with the maximum utlization requirements set forth in Table VIII at the times of the various listed events.	Yes	

CEI Compliance to RD

RD Rqmt #	RD Requirement Text	CEI Rqmt #	CEI Rqmt Text	Comply	Compliance Comments
		3.2.1.14.2.5.b	All Spacecraft Bus firmware shall comply with the maximum utlization requirements set forth in Table IX at the times of the various listed events.	Yes	
3.2.2.8.3.13.d	Dedicated, single-function processors for which maximum loading can be precisely computed shall be sized such that, at launch, in the worst-case operating modes, the following margins (measured as a percentage of the total available resource) are maintained: (1) 20% of the instruction execution capacity;	3.2.1.14.2.5.a	All Spacecraft Bus software shall comply with the maximum utlization requirements set forth in Table VIII at the times of the various listed events.	Yes	
		3.2.1.14.2.5.b	All Spacecraft Bus firmware shall comply with the maximum utlization requirements set forth in Table IX at the times of the various listed events.	Yes	
3.2.2.8.3.13.e	(2) 20% of the I/O bandwidth; and	3.2.1.14.2.5.a	All Spacecraft Bus software shall comply with the maximum utlization requirements set forth in Table VIII at the times of the various listed events.	Yes	
		3.2.1.14.2.5.b	All Spacecraft Bus firmware shall comply with the maximum utlization requirements set forth in Table IX at the times of the various listed events.	Yes	
3.2.2.8.3.13.f	(3) 30% of the RAM capacity.	3.2.1.14.2.5.b	All Spacecraft Bus firmware shall comply with the maximum utlization requirements set forth in Table IX at the times of the various listed events.	Yes	

CEI Compliance to RD

RD Rqmt #	RD Requirement Text	CEI Rqmt #	CEI Rqmt Text	Comply	Compliance Comments
3.2.2.8.3.13.g	No margins are required for Read-Only Memory (ROM) capacity in any processor.				
3.2.2.8.3.14	Architectural Growth				
3.2.2.8.3.14.a	The C&DH architecture shall facilitate increases in subsystem performance and/or functionality, prior to launch of any spacecraft, through the replacement of subsystem components with units incorporating hardware and/or technology upgrades while otherwise meeting interface requirements.	3.7.1.6.13.a	The C&DHS architecture shall incorporate functional modularity where practical such that performance and functionality growth may be realized via the incorporation of hardware and technology upgrades to individual modules.	Yes	
3.2.2.8.3.15	Direct Access Service				
3.2.2.8.3.15.a	a) The spacecraft shall accept DB and DDL data from the instruments as described in 3.2.2.5.2.4 via normal science paths.	3.2.1.7.5.5.1.a	The Spacecraft Bus shall accept DB data from the selected Instruments via the same data transmission path as is used for Instrument science data.	Yes	
		3.2.1.7.5.6.1.a	The Spacecraft Bus shall accept DDL data from the selected Instruments via the same data transmission path as is used for Instrument science data.	Yes	

CEI Compliance to RD

RD Rqmt #	RD Requirement Text	CEI Rqmt #	CEI Rqmt Text	Comply	Compliance Comments
3.2.2.8.3.15.b	b) The spacecraft shall include packetized ancillary data in the DB data stream.	3.2.1.7.5.a	The Spacecraft Bus shall provide a Direct Access Service (DAS), including a direct downlink (DDL), broadcast (DB), and playback (DP) capability for the Instruments as shown in Table VII.	Yes	
		3.2.1.7.5.3.a	Ancillary Data transmitted in the DAS data shall be identical to that transmitted in the Ku-band services.	Yes	
3.2.2.8.3.15.c	These data shall be identical to those included with the science data for transmission via the K-band return link.	3.2.1.7.5.3.a	Ancillary Data transmitted in the DAS data shall be identical to that transmitted in the Ku-band services.	Yes	
3.2.2.8.3.15.d	c) The spacecraft shall process the DB and DDL data in accordance with the Path Packet Service with Grade of Service II, as defined in CCSDS 701.00-B-1.	3.2.1.7.5.5.2.a	The Spacecraft Bus shall add fill data as necessary for transmission at the data rate in Table VI.	Yes	
		3.2.1.7.5.6.2.a	The Spacecraft Bus shall process the DDL data in accordance with the Path Packet Service with Grade of Service 2, as defined in CCSDS 701.00-B-1.	Yes	

CEI Compliance to RD

RD Rqmt #	RD Requirement Text	CEI Rqmt #	CEI Rqmt Text	Comply	Compliance Comments
		3.2.1.8.1.3.a	They shall comply with the recommendations of the Consultative Committee for Space Data Systems (CCSDS) as follows: K-Band return ans S-Band Return-CCSDS 701.00-B-1,Grade 2; S-Band Forward-CCSDS 201.0-B-1, CCSDS 202-B-1 (COP-1), CCSDS 203.0-B-1; and CCSDS 301.0-B-1, Time Code Formats using day segmented binary milestones and microseconds.	Yes	
3.2.2.8.3.15.e	d) The spacecraft shall, on command, play back recorded science, ancillary, and housekeeping data at a rate as specified in Table IV.	3.2.1.7.1.4.a	The Spacecraft Bus shall be capable of transmitting and receiving data in accordance with the rates (which include all CCSDS overhead) shown in Tables V and VI. The Spacecraft Bus shall be capable of transmitting the data shown in the Table VI Usage column over the link specified by the associated Data Rate, Path, and Return Link Service Columns.	Yes	
		3.2.1.7.1.4.h	DB (X-Band) DAS service shall support a 12.5 Mbps return link on both I and Q channels for real-time direct broadcast of low-rate science data.	Yes	

CEI Compliance to RD

RD Rqmt #	RD Requirement Text	CEI Rqmt #	CEI Rqmt Text	Comply	Compliance Comments
		3.2.1.7.1.4.j	The DAS DDL service shall support a 12.5 Mbps return link on the I channel and 105 kbps return link on the Q channel for real-time direct downlink of high-rate science data.	Yes	
		3.2.1.7.1.4.m	The DAS DP earth coverage service shall support a 75 kbps return link on both I and Q channels for playback of the science data records to provide a backup to the TDRSS KSA science data downlink.	Yes	
		3.2.1.7.1.4.p	The DAS DP' service Shall support a 12.5 Mbps return link on the I channel and 105 kbps on the Q channel.	Yes	
		3.2.1.7.5.5.2.a	The Spacecraft Bus shall add fill data as necessary for transmission at the data rate in Table VI.	Yes	
		3.2.1.7.5.5.3.a	The Spacecraft Bus shall transmit the DB data stream in real time via a QPSK-modulated X-band downlink.	Yes	
		3.2.1.7.5.6.2.b	The Spacecraft shall add fill data as necessary for transmission at the data rate specified in Table VI.	Yes	

CEI Compliance to RD

RD Rqmt #	RD Requirement Text	CEI Rqmt #	CEI Rqmt Text	Comply	Compliance Comments
		3.2.1.7.5.7.1.a	The Spacecraft Bus shall, on command, play back recorded science and housekeeping data at a rate, commensurate with the maximum DP link rate specified in Table VI.	Yes	
		3.2.1.7.5.7.2.a	The Spacecraft Bus shall transmit the DP data stream via a QPSK-modulated X-band downlink.	Yes	
3.2.2.9	Software				
3.2.2.9.1	Spacecraft Software Life Cycle				
3.2.2.9.1.a	All spacecraft flight and ground operations software shall be developed per the NASA Standard Software life cycle defined in SMAP 4.0 and documentation standards defined in NASA-STD-2100-91.	3.2.1.14.2.1.a	All Spacecraft Bus software with greater than 5000 software lines of code to be implemented shall be developed in compliance with the NASA Standard Software Life Cycle defined in SMAP 4.0 and documentation standards defined in NASA-STD-2100-91, and in compliance with the policies defined in 421-10-03 (EOS AM Project Spacecraft Bus Software Management Plan).	Yes	Language approved via GSFC's approval of contractor's Software Management and Development Plans.
3.2.2.9.2	Programming Language				

CEI Compliance to RD

RD Rqmt #	RD Requirement Text	CEI Rqmt #	CEI Rqmt Text	Comply	Compliance Comments
3.2.2.9.2.a	The spacecraft software shall be developed using an ANSI standard high-level programming language (e.g., Ada).	3.2.1.14.2.4.a	Where practical, all Spacecraft Bus software shall be developed in the Ada programming language as per ANSI/MIL-STD-1815A. Where Ada is not used, another appropriate high-level programming language shall be used if practical.	Yes	
		3.2.1.14.2.4.b	Spacecraft Bus software shall be developed using assembly language only where dictated by software performance (i.e., speed) requirements or by the lack of an appropriate high-level language for the host processor.	Yes	
3.2.2.9.2.b	The choice of programming language shall be approved by the government.	3.2.1.14.2.1.a	All Spacecraft Bus software with greater than 5000 software lines of code to be implemented shall be developed in compliance with the NASA Standard Software Life Cycle defined in SMAP 4.0 and documentation standards defined in NASA-STD-2100-91, and in compliance with the policies defined in 421-10-03 (EOS AM Project Spacecraft Bus Software Management Plan).	Yes	Language approved via GSFC's approval of contractor's Software Management and Development Plans.

CEI Compliance to RD

RD Rqmt #	RD Requirement Text	CEI Rqmt #	CEI Rqmt Text	Comply	Compliance Comments
3.2.2.9.2.c	This approval will be effected via the Element Software Development Plan (SDP).				
3.2.2.9.2.d	Where cost-effective, deviation from the use of the approved programming language will be allowed and specifically approved via the SDP.	3.2.1.14.2.4.b	Spacecraft Bus software shall be developed using assembly language only where dictated by software performance (i.e., speed) requirements or by the lack of an appropriate high-level language for the host processor.	Yes	
3.2.2.9.3	Software Development Environment				
3.2.2.9.3.a	A Software Development Environment shall be used for the life cycle management of EOS spacecraft and associated ground operational software.	3.2.1.14.2.2.a	Adaptations to the life cycles specified in the documents of 3.2.1.14.2.1 shall be considered when the Source Lines of Code (SLOC) to be implemented are greater than 500 and equal to or less than 5000. Life cycle and documentation standards defined in NASA-STD-2100-91 do not apply when the SLOC to be implemented are equal to or less than 500.	Yes	

CEI Compliance to RD

RD Rqmt #	RD Requirement Text	CEI Rqmt #	CEI Rqmt Text	Comply	Compliance Comments
3.2.2.9.3.b	This environment will be that mix of manual and automated tools and procedures minimally necessary to cost-effectively perform software project management; software development; local software configuration management; software test, integration, and verification; and long term software maintenance.				
3.2.2.9.3.c	The Software Development Environment shall support spacecraft policies and standards including those for: standard languages(s),	3.2.1.14.2.1.a	All Spacecraft Bus software with greater than 5000 software lines of code to be implemented shall be developed in compliance with the NASA Standard Software Life Cycle defined in SMAP 4.0 and documentation standards defined in NASA-STD-2100-91, and in compliance with the policies defined in 421-10-03 (EOS AM Project Spacecraft Bus Software Management Plan).	Yes	Language approved via GSFC's approval of contractor's Software Management and Development Plans.

CEI Compliance to RD

RD Rqmt #	RD Requirement Text	CEI Rqmt #	CEI Rqmt Text	Comply	Compliance Comments
		3.2.1.14.2.4.a	Where practical, all Spacecraft Bus software shall be developed in the Ada programming language as per ANSI/MIL-STD-1815A. Where Ada is not used, another appropriate high-level programming language shall be used if practical.	Yes	
		3.2.1.14.2.4.b	Spacecraft Bus software shall be developed using assembly language only where dictated by software performance (i.e., speed) requirements or by the lack of an appropriate high-level language for the host processor.	Yes	
3.2.2.9.3.d	operational user interfaces, and	3.2.1.14.2.1.a	All Spacecraft Bus software with greater than 5000 software lines of code to be implemented shall be developed in compliance with the NASA Standard Software Life Cycle defined in SMAP 4.0 and documentation standards defined in NASA-STD-2100-91, and in compliance with the policies defined in 421-10-03 (EOS AM Project Spacecraft Bus Software Management Plan).	Yes	Language approved via GSFC's approval of contractor's Software Management and Development Plans.

CEI Compliance to RD

RD Rqmt #	RD Requirement Text	CEI Rqmt #	CEI Rqmt Text	Comply	Compliance Comments
		3.2.4.3.1.a	The Spacecraft Bus shall utilize standardized hardware, software, data formats, and procedures to facilitate maintenance.	Yes	
3.2.2.9.3.e	documentation.	3.2.1.14.2.1.a	All Spacecraft Bus software with greater than 5000 software lines of code to be implemented shall be developed in compliance with the NASA Standard Software Life Cycle defined in SMAP 4.0 and documentation standards defined in NASA-STD-2100-91, and in compliance with the policies defined in 421-10-03 (EOS AM Project Spacecraft Bus Software Management Plan).	Yes	Language approved via GSFC's approval of contractor's Software Management and Development Plans.
		3.2.1.14.2.2.a	Adaptations to the life cycles specified in the documents of 3.2.1.14.2.1 shall be considered when the Source Lines of Code (SLOC) to be implemented are greater than 500 and equal to or less than 5000. Life cycle and documentation standards defined in NASA-STD-2100-91 do not apply when the SLOC to be implemented are equal to or less than 500.	Yes	

CEI Compliance to RD

RD Rqmt #	RD Requirement Text	CEI Rqmt #	CEI Rqmt Text	Comply	Compliance Comments
3.2.2.9.3.f	The Software Development Environment and the Project Integrated Information System shall utilize the same tools for similar functions and shall be able to exhange data as necessary to accomplish Project and Program management.	3.2.1.14.2.1.a	All Spacecraft Bus software with greater than 5000 software lines of code to be implemented shall be developed in compliance with the NASA Standard Software Life Cycle defined in SMAP 4.0 and documentation standards defined in NASA-STD-2100-91, and in compliance with the policies defined in 421-10-03 (EOS AM Project Spacecraft Bus Software Management Plan).	Yes	Language approved via GSFC's approval of contractor's Software Management and Development Plans.
		3.2.4.3.1.a	The Spacecraft Bus shall utilize standardized hardware, software, data formats, and procedures to facilitate maintenance.	Yes	
3.2.2.9.3.g	Such data includes but may not be limited to schedules, budgets, and documentation (text and graphics).				
3.2.2.9.4	Software Management Plan				

CEI Compliance to RD

RD Rqmt #	RD Requirement Text	CEI Rqmt #	CEI Rqmt Text	Comply	Compliance Comments
3.2.2.9.4.a	Spacecraft software shall be developed per the policies defined in 421-10-03 the EOS-AM Project Spacecraft Bus Software Management Plan.	3.2.1.14.2.1.a	All Spacecraft Bus software with greater than 5000 software lines of code to be implemented shall be developed in compliance with the NASA Standard Software Life Cycle defined in SMAP 4.0 and documentation standards defined in NASA-STD-2100-91, and in compliance with the policies defined in 421-10-03 (EOS AM Project Spacecraft Bus Software Management Plan).	Yes	Language approved via GSFC's approval of contractor's Software Management and Development Plans.
3.2.2.9.5	Flight Software				
3.2.2.9.5.1	Ease of Revising Software				
3.2.2.9.5.1.a	Software shall be designed such that revisions and corrections can be easily installed on-orbit.	3.2.1.8.1.2.a	The Spacecraft Bus shall execute ground commands for redundancy switching and loading and dumping of software and of programmable data.	Yes	
		3.2.1.14.1.2.a	Spacecraft Bus components which comprise computer programs shall, where practical, be implemented as software and be reprogrammable on orbit.	Yes	
		3.7.1.6.7.c	The C&DHS shall provide command services in support of modifications to loaded FSWS software.	Yes	

CEI Compliance to RD

RD Rqmt #	RD Requirement Text	CEI Rqmt #	CEI Rqmt Text	Comply	Compliance Comments
		3.7.1.6.7.d	The C&DHS shall provide telemetry services which allow ground controllers to inspect FSWS.	Yes	
		3.7.1.10.7.a	The FSWS shall accept and process uplinked command data and computer memory load data at rates commensurate with the capacities of the ground-to-Spacecraft communications links.	Yes	
3.2.2.9.5.2	Authorized Memory Load Modification				
3.2.2.9.5.2.a	The spacecraft software shall support services which effect authorized modifications to any spacecraft memory load.	3.2.1.8.1.2.a	The Spacecraft Bus shall execute ground commands for redundancy switching and loading and dumping of software and of programmable data.	Yes	
		3.2.1.14.1.2.a	Spacecraft Bus components which comprise computer programs shall, where practical, be implemented as software and be reprogrammable on orbit.	Yes	
		3.7.1.6.7.c	The C&DHS shall provide command services in support of modifications to loaded FSWS software.	Yes	

CEI Compliance to RD

RD Rqmt #	RD Requirement Text	CEI Rqmt #	CEI Rqmt Text	Comply	Compliance Comments
		3.7.1.10.1.a	The Flight Software System (FSWS) shall supply all Spacecraft Bus flight software, and firmware for selected C&DHS components which contain embedded processors.	Yes	
		3.7.1.10.7.a	The FSWS shall accept and process uplinked command data and computer memory load data at rates commensurate with the capacities of the ground-to-Spacecraft communications links.	Yes	
3.2.2.9.5.3	Integrity and Revision Checking				
3.2.2.9.5.3.a	Each spacecraft memory load modification shall include an integrity and revision checking method.	3.2.1.14.1.1.a	The Spacecraft Bus flight software shall incorporate provisions for verifying the integrity of and the revision of loaded software via telemetry.	Yes	
3.2.2.9.5.4	Override and Inhibit				
3.2.2.9.5.4.a	Flight application software shall be capable of accepting and executing authorized ground-commanded override or inhibit commands of critical functions included in the flight application software.	3.7.1.1.8.1.5.a	All subsystems shall accept and execute commands to override or inhibit the execution of autonomous functions which may interfere with Spacecraft operations or jeopardize the health of the Spacecraft.	Yes	

CEI Compliance to RD

RD Rqmt #	RD Requirement Text	CEI Rqmt #	CEI Rqmt Text	Comply	Compliance Comments
3.2.2.9.5.5	Flight Software Developmental Capacity Limitations				
3.2.2.9.5.5.a	During development, all flight software shall meet the following capacity limitations at PDR, CDR, and FRR as defined in Table VII.	3.2.1.14.2.5.a	All Spacecraft Bus software shall comply with the maximum utlization requirements set forth in Table VIII at the times of the various listed events.	Yes	
		3.2.1.14.2.5.b	All Spacecraft Bus firmware shall comply with the maximum utlization requirements set forth in Table IX at the times of the various listed events.	Yes	
3.2.2.9.5.5.b	The total % of memory capacity used as allowed in 3.2.2.8.3.13, 70% at PDR, 85% at CDR, and 95% at FRR.	3.2.1.14.2.5.b	All Spacecraft Bus firmware shall comply with the maximum utlization requirements set forth in Table IX at the times of the various listed events.	Yes	
3.2.2.9.5.5.c	The total % of CPU capacity used as allowed in 3.2.2.8.3.13, 70% at CDR, 85% at PDR, and 95% at FRR.				
3.2.2.9.5.5.d	The total % of I/O capacity used as allowed in 3.2.2.8.3.13, 70% at PDR, 85% at CDR, and 95% at FRR.				
3.2.2.9.5.6	Automated Functions Override				

CEI Compliance to RD

RD Rqmt #	RD Requirement Text	CEI Rqmt #	CEI Rqmt Text	Comply	Compliance Comments
3.2.2.9.5.6.a	The spacecraft software shall support a capability to provide warning and advisory information necessary to safely override functions via ground interaction.	3.2.1.3.2.1.1.a	Spacecraft Bus communications return links shall contain housekeeping telemetry which includes:	Yes	
		3.2.1.3.2.1.1.h	g. Notification of all autonomous switching between redundant paths,	Yes	
		3.2.1.3.2.1.1.i	h. Warning and advisory data, if any,	Yes	
		3.7.1.1.8.1.5.a	All subsystems shall accept and execute commands to override or inhibit the execution of autonomous functions which may interfere with Spacecraft operations or jeopardize the health of the Spacecraft.	Yes	
3.2.2.9.5.7	Software Identification Capability				
3.2.2.9.5.7.a	The spacecraft software shall provide a self-identification capability that will provide software version information to reduce ground time devoted to configuration management.	3.2.1.14.1.1.a	The Spacecraft Bus flight software shall incorporate provisions for verifying the integrity of and the revision of loaded software via telemetry.	Yes	
3.2.2.9.5.8	Anomaly Detection and Correction				
3.2.2.9.5.8.a	The spacecraft shall provide the flight software to support the implementation of the anomaly detection and correction functions defined in 3.2.1.5.1.1 and 3.2.1.5.1.2.	3.7.1.10.3.a	The FSWS shall execute software control, monitoring, FDIR, and other algorithms required by other subsystems as allocated by the subsystem specifications.	Yes	

CEI Compliance to RD

RD Rqmt #	RD Requirement Text	CEI Rqmt #	CEI Rqmt Text	Comply	Compliance Comments
		3.7.1.10.8.a	Software FDIR shall monitor the Spacecraft central computer and related processing equipment operation.	Yes	
3.3	Design and Construction Requirements				
3.3.a	Spacecraft design shall conform to the design and performance requirements in this document. In addition, the design of the spacecraft, subsystems, and equipment modules shall conform to the following:	3.7.1.1.1.a	Each Spacecraft Bus subsystem shall perform all functions allocated to it, unless otherwise specified, throughout mission life.	Yes	
		3.7.1.1.1.b	Each subsystem shall provide resources or services as required for Spacecraft and Instrument survival.	Yes	
3.3.1	Mechanical Properties				
3.3.1.1	Allowable Mechanical Properties				
3.3.1.1.a	Values for allowable mechanical properties of structural materials in their design environment, e.g., subjected to single or combined stresses, shall be taken from MIL-HDBK-5, MIL-HDBK-17, or other sources approved by NASA.	3.7.1.7.1.1.2.a	Values for allowable mechanical properties of structural materials in their design environment (e.g., subjected to single or combined stresses) shall be taken from MIL-HDBK-5, MIL-HDBK-17, or other sources approved by NASA.	Yes	

CEI Compliance to RD

RD Rqmt #	RD Requirement Text	CEI Rqmt #	CEI Rqmt Text	Comply	Compliance Comments
3.3.1.1.b	Where values for mechanical properties of new materials or joints or existing materials or joints in new environments are not available, they shall be determined by analytical or test methods approved by NASA.	3.7.1.7.1.1.4.a	Where values are not available for mechanical properties of new materials or joints, or for existing materials or joints in new environments, they shall be determined by analytical or test methods approved by NASA.	Yes	
3.3.1.1.c	When using MIL-HDBK-5, material "A" allowable values shall be used in all applications where failure of a single load path would result in loss of vehicle structural integrity.	3.7.1.7.1.1.3.a	When using MIL-HDBK-5, material "A" allowable values shall be used where failure of a single load path would result in loss of structural integrity.	Yes	
3.3.1.1.d	Material "B" allowable values may be used in redundant structure in which the failure of a component would result in a safe redistribution of applied loads to other load-carrying members.				
3.3.1.2	Margins of Safety (MS)				
3.3.1.2.a	All structures of the spacecraft shall have positive MS for all load conditions.	3.7.1.7.1.1.1.a	All structures shall be designed using appropriate Factors of Safety (FS) defined in the mechanical section of the General Interface Specification (GIS).	Yes	
		3.7.1.7.1.5.7.a	All structures shall have positive Margins of Safety (MS) under all predicted load conditions.	Yes	

CEI Compliance to RD

RD Rqmt #	RD Requirement Text	CEI Rqmt #	CEI Rqmt Text	Comply	Compliance Comments
3.3.1.3	Factors of Safety (FS)				
3.3.1.3.a	The design of the spacecraft shall use the minimum factors of safety defined below for launch and on-orbit operational environments.	3.7.1.7.1.1.1.a	All structures shall be designed using appropriate Factors of Safety (FS) defined in the mechanical section of the General Interface Specification (GIS).	Yes	
3.3.1.3.b	Factors for safety shall be consistent with those defined in WSMCR 127-1, MIL-STD-1552A, and Joint Eastern/Western Space and Missile Center (ESMC/WSMC) Policy for Ground Transportation/ Handling of Hazardous Materials and Pressurized Vessels used on Missiles and Space Vehicles.	3.7.1.7.1.1.1.a	All structures shall be designed using appropriate Factors of Safety (FS) defined in the mechanical section of the General Interface Specification (GIS).	Yes	
3.3.1.3.c	The general factors of safety for metallic flight structures with static testing shall be 1.25 for Yield and 1.4 for Ultimate.	3.7.1.7.1.1.1.a	All structures shall be designed using appropriate Factors of Safety (FS) defined in the mechanical section of the General Interface Specification (GIS).	Yes	
3.3.1.3.d	The general factors of safety for metallic flight structures without static testing shall be 2.0 for Yield and 2.6 for Ultimate.	3.7.1.7.1.1.1.a	All structures shall be designed using appropriate Factors of Safety (FS) defined in the mechanical section of the General Interface Specification (GIS).	Yes	

CEI Compliance to RD

RD Rqmt #	RD Requirement Text	CEI Rqmt #	CEI Rqmt Text	Comply	Compliance Comments
3.3.1.3.e	The general factors of safety for nonmetallic flight structures verfied by analysis and static test shall be 1.4 Ultimate for nondiscontinuity areas.	3.7.1.7.1.1.1.a	All structures shall be designed using appropriate Factors of Safety (FS) defined in the mechanical section of the General Interface Specification (GIS).	Yes	
3.3.1.3.f	The general factors of safety for nonmetallic flight structures verfied by analysis and static test shall be 2.0 Ultimate for discontinuity areas and joints. This is a minimum total factor, no other special factors are required.	3.7.1.7.1.1.1.a	All structures shall be designed using appropriate Factors of Safety (FS) defined in the mechanical section of the General Interface Specification (GIS).	Yes	
3.3.1.3.g	General factors of safety for pressure for engine structures and components shall be 1.5 x MOP for proof pressure and 2.5 x MOP for ultimate pressure.	3.7.1.7.1.1.1.a	All structures shall be designed using appropriate Factors of Safety (FS) defined in the mechanical section of the General Interface Specification (GIS).	Yes	
3.3.1.3.h	General factors of safety for hydraulic and pneumatic lines and fittings less than 1.5 inches diameter shall be 1.5 x MOP for proof pressure and 4.0 x MOP for ultimate pressure.	3.7.1.7.1.1.1.a	All structures shall be designed using appropriate Factors of Safety (FS) defined in the mechanical section of the General Interface Specification (GIS).	Yes	

CEI Compliance to RD

RD Rqmt #	RD Requirement Text	CEI Rqmt #	CEI Rqmt Text	Comply	Compliance Comments
3.3.1.3.i	General factors of safety for hydraulic and pneumatic lines and fittings greater than 1.5 inches diameter shall be 1.5 x MOP for proof pressure and 2.5 x MOP for ultimate pressure.	3.7.1.7.1.1.1.a	All structures shall be designed using appropriate Factors of Safety (FS) defined in the mechanical section of the General Interface Specification (GIS).	Yes	
3.3.1.3.j	General factors of safety for hydraulic and pneumatic reservoirs and pressure vessels (tanks, reservoirs) shall be 1.25 x MOP for proof pressure and 1.5 x MOP for ultimate pressure. Proof factor determined from fracture mechanics service life analysis must be used if greater than minimum factor. There shall be no detrimental deformation at noted factor of safety.	3.7.1.7.1.1.1.a	All structures shall be designed using appropriate Factors of Safety (FS) defined in the mechanical section of the General Interface Specification (GIS).	Yes	

CEI Compliance to RD

RD Rqmt #	RD Requirement Text	CEI Rqmt #	CEI Rqmt Text	Comply	Compliance Comments
3.3.1.3.k	General factors of safety for hydraulic and pneumatic reservoirs and pressure vessels (nickel hydrogen cells) shall be 1.5 x MOP for proof pressure and 3.0 x MOP for ultimate pressure. Proof factor determined from fracture mechanics service life analysis must be used if greater than minimum factor. There shall be no detrimental deformation at noted factor of safety.	3.7.1.7.1.1.1.a	All structures shall be designed using appropriate Factors of Safety (FS) defined in the mechanical section of the General Interface Specification (GIS).	Yes	
3.3.1.3.l	General factors of safety for hydraulic and pneumatic reservoirs and pressure vessels other than those listed shall be 1.5 x MOP for proof pressure and 2.5 x MOP for ultimate pressure. Proof factor determined from fracture mechanics service life analysis must be used if greater than minimum factor. There shall be no detrimental deformation at noted factor of safety.	3.7.1.7.1.1.1.a	All structures shall be designed using appropriate Factors of Safety (FS) defined in the mechanical section of the General Interface Specification (GIS).	Yes	
3.3.2	Materials, Processes, and Parts				

CEI Compliance to RD

RD Rqmt #	RD Requirement Text	CEI Rqmt #	CEI Rqmt Text	Comply	Compliance Comments
3.3.2.a	Materials shall be selected on the basis of induced environments compatibility, functional acceptability and suitability, extended life, technological maturity, manufacturability, inspectability, contamination characteristics, specific strength, mutual compatibility, availability, cost, and safety.	3.3.1.2.a	Materials shall be selected on the basis of natural and induced environments compatibility, functional acceptability and suitability, extended life characteristics, technological maturity, manufacturability, inspectability, contamination characteristics, specific strength, mutual compatibility, availability, cost, and safety.	Yes	
3.3.2.b	Materials selection and documentation requirements are defined in 420-05-02, Performance Assurance Requirements for EOS-AM Spacecraft.	3.3.1.1.a	Materials selection and documentation shall comply with the requirements of GSFC 420-05-02, Performance Assurance Requirements for EOS Observatories.	Yes	
3.3.3	Environmental Control Standards				
3.3.3.1	Electromagnetic Compatibility				
3.3.3.1.a	The spacecraft shall be consistent with the Electromagnetic Compatibility (EMC) guidelines defined in the General Environmental Verification Specification for STS and ELV Payloads, Subsystems, and Components (GEVS-SE).	3.2.5.3.1.a	The Spacecraft Bus shall comply with the electromagnetic compatibility requirements of EMC Control Plan PN20005869.	Yes	

CEI Compliance to RD

RD Rqmt #	RD Requirement Text	CEI Rqmt #	CEI Rqmt Text	Comply	Compliance Comments
3.3.3.1.b	Detailed requirements shall be documented in the EMC Control Plan.	3.2.5.3.1.a	The Spacecraft Bus shall comply with the electromagnetic compatibility requirements of EMC Control Plan PN20005869.	Yes	
3.3.3.2	Ionization Radiation and Plasma Effects				
3.3.3.2.a	The spacecraft shall be designed to be compatible with the total ionizing dose radiation and single event upset radiation levels for the EOS-AM spacecraft orbit.	3.2.5.3.3.a	Spacecraft hardware shall be immune to latch-up from single event upsets induced by cosmic rays where possible.	Yes	
		3.2.5.3.3.b	If this immunity is not possible, the spacecraft hardware shall be protected by appropriate latch-up detection and recovery circuitry as defined within section 6.4 of the General Interface Specification, IS20008501.	Yes	
		3.2.5.3.3.c	The Spacecraft hardware shall also be capable of withstanding single event upsets and transients induced by the singular or combined effects of cosmic rays, solar flares, and geomagnetically trapped protons in the spacecraft mission environment as defined within section 6.4 of the General Interface Specification, IS20008501.	Yes	

CEI Compliance to RD

RD Rqmt #	RD Requirement Text	CEI Rqmt #	CEI Rqmt Text	Comply	Compliance Comments
3.3.3.2.b	Spacecraft hardware shall be immune to cosmic ray ion induced latch-up in the spacecraft environment.	3.2.5.3.3.a	Spacecraft hardware shall be immune to latch-up from single event upsets induced by cosmic rays where possible.	Yes	
3.3.3.2.c	If this immunity is not possible, the flight equipment shall be protected by appropriate latch-up detection and recovery circuitry.	3.2.5.3.3.b	If this immunity is not possible, the spacecraft hardware shall be protected by appropriate latch-up detection and recovery circuitry as defined within section 6.4 of the General Interface Specification, IS20008501.	Yes	
3.3.3.2.d	The flight hardware shall also be capable of tolerating single event data and transient upsets induced by the singular or combined effects of cosmic ray ions and geomagnetically trapped protons in the spacecraft environment.	3.2.5.3.3.c	The Spacecraft hardware shall also be capable of withstanding single event upsets and transients induced by the singular or combined effects of cosmic rays, solar flares, and geomagnetically trapped protons in the spacecraft mission environment as defined within section 6.4 of the General Interface Specification, IS20008501.	Yes	
3.3.4	Quality Assurance				
3.3.4.a	The spacecraft shall be fabricated in accordance with Quality Assurance requirements defined in Section 8 of 420-05-02, Performance Assurance Requirements for EOS-AM Spacecraft.	3.2.3.3.a	The Spacecraft Bus reliability program shall comply with the requirements of GSFC 420-05-02.	Yes	

CEI Compliance to RD

RD Rqmt #	RD Requirement Text	CEI Rqmt #	CEI Rqmt Text	Comply	Compliance Comments
		3.3.1.1.a	Materials selection and documentation shall comply with the requirements of GSFC 420-05-02, Performance Assurance Requirements for EOS Observatories.	Yes	
		3.3.1.2.a	Materials shall be selected on the basis of natural and induced environments compatibility, functional acceptability and suitability, extended life characteristics, technological maturity, manufacturability, inspectability, contamination characteristics, specific strength, mutual compatibility, availability, cost, and safety.	Yes	
3.3.5	Identification				
3.3.5.a	a) Equipment which is not suitable for flight use should be marked appropriately to prevent accidental substitution.	3.3.2.1.a	Equipment not suitable for flight use shall be marked appropriately to prevent accidental substitution.	Yes	
3.3.5.b	b) Labeling shall be such that it is visible when installed in the parent system or stowed.	3.3.2.2.a	Component labeling shall be visible when the component is installed in the parent assembly or stowed.	Yes	

CEI Compliance to RD

RD Rqmt #	RD Requirement Text	CEI Rqmt #	CEI Rqmt Text	Comply	Compliance Comments
		3.3.2.2.b	Labels shall be installed such that they are readable by the unaided human eye.	Yes	Devices exist which can read whatever human eye reads.
3.3.5.c	Labels shall be secured to the hardware in such a manner that they are readable by the unaided human eye and an automated type reader device.				
		3.3.2.2.b	Labels shall be installed such that they are readable by the unaided human eye.	Yes	Devices exist which can read whatever human eye reads.
3.3.5.d	c) Wire bundles, fiber optics and fluid lines shall be functionally identifiable at each end and at every 5 meters.				
		3.3.2.3.a	Wire bundles, cables, and fluid lines shall be functionally identifiable at each end.	Yes	
		9.9.9.9.c	No-match in Contract End Item Specification PS20005386	No	Missing from CEI ("every 5 meters")
3.3.5.e	d) All test point adjustment devices and alignment points shall be positively identified and labeled.	3.3.2.4.a	All test points, adjustment devices, and alignment points visible at the integrated Spacecraft level shall be labeled for positive identification.	Yes	

CEI Compliance to RD

RD Rqmt #	RD Requirement Text	CEI Rqmt #	CEI Rqmt Text	Comply	Compliance Comments
3.3.5.f	e) The proper orientation for an item to be placed in its transport/storage case shall be obvious by its design or marking.	3.3.2.5.a	The proper orientation for placing items in storage or transportation containers shall be obvious by design or marking.	Yes	
3.3.6	Grounding				
3.3.6.a	Spacecraft power shall be referenced at a single point.	3.7.1.1.9.d	Each subsystem shall utilize the EAS-provided single-point ground reference.	Yes	
3.3.6.b	Secondary circuits shall be single point referenced at the subunit or component at which the secondary power is generated.	3.7.1.1.14.a	All subsystems and components shall, utilize the standard interfaces defined in the GIS, unless an exception to this is explicitly noted in its specification.	Yes	
4.0	PERFORMANCE ASSURANCE REQUIREMENTS				
4.0.a	The Performance Assurance requirements for spacecraft are defined in 420-05-02, Performance Assurance Requirements for the EOS-AM Spacecraft.				
5.0	VERIFICATION REQUIREMENTS				
5.0.a	Verification requirements are specified in 420-05-02, Performance Assurance Requirements for the EOS-AM Spacecraft.				

CEI Compliance to RD

RD Rqmt #	RD Requirement Text	CEI Rqmt #	CEI Rqmt Text	Comply	Compliance Comments
10.0.a.APP.C.a	For those instruments for which no UIID has been approved, the instrument parameters defined below shall be assumed for spacecraft design activities.	3.1.5.1.2.a	The Spacecraft Bus shall comply with the interface requirements of the EOS-AM Instrument set listed in Section 3.1.3, as described in the Unique Instrument Interface Documents (UIIDs). The Spacecraft Bus shall comply with the requirements of the UIIDs.	Yes	
		3.1.5.1.2.c	UIID Instrument parameters defined below shall be assumed for Spacecraft Bus design activities.	Yes	
10.0.b.app.C.b	As UIIDs become approved and are incorporated into this Requirements Document, the below-listed parameters will be superseeded, as appropriate.	3.1.5.1.2.c	UIID Instrument parameters defined below shall be assumed for Spacecraft Bus design activities.	Yes	
10.1.APP.C.1	Instrument Mass				
10.1.a.APP.C.1	ASTER shall have a mass allocation per UIID.	3.1.5.1.2.d	The spacecraft shall accomodate ASTER's 992.3 lb mass.	Yes	
10.1.b.APP.C.1	CERES shall have a mass allocation per UIID.	3.1.5.1.2.g	The spacecraft shall accomodate CERES's 198.5 lb mass.	Yes	
10.1.c.APP.C.1	MISR shall have a mass allocation per UIID.	3.1.5.1.2.e	The spacecraft shall accomodate MISR's 297.7 lb mass.	Yes	
10.1.d.APP.C.1	MODIS shall have a mass allocation per UIID.	3.1.5.1.2.f	The spacecraft shall accomodate MODIS's 613.0 lb mass.	Yes	

CEI Compliance to RD

RD Rqmt #	RD Requirement Text	CEI Rqmt #	CEI Rqmt Text	Comply	Compliance Comments
10.1.e.APP.C.1	MOPITT shall have a mass allocation per UIID.	3.1.5.1.2.h	The spacecraft shall accomodate MOPITT's 352.8 lb mass.	Yes	
10.2.APP.C.2	Instrument Power				
10.2.a.APP.C.2	ASTER shall have a power allocation per its UIID.	3.1.5.1.2.y	The spacecraft shall provide ASTER a maximum 1 orbit average of 525 Watts, a 2 orbit average of 470 Watts, and a maximum peak of 761 Watts electrical power.	Yes	
10.2.b.APP.C.2	CERES shall have a power allocation per its UIID.	3.1.5.1.2.ab	The spacecraft shall provide CERES a maximum 1 orbit and 2 orbit average of 95 Watts each and a maximum peak of 185 Watts electrical power.	Yes	
10.2.c.APP.C.2	MISR shall have a power allocation of 80 W 1 orbit average, 75 W 2 orbit average, and 135 W peak.	3.1.5.1.2.z	The spacecraft shall provide MISR a maximum 1 orbit average of 80 Watts, a 2 orbit average of 75 Watts, and a maximum peak of 135 Watts electrical power.	Yes	
10.2.d.APP.C.2	MODIS shall have a power allocation per its UIID.	3.1.5.1.2.aa	The spacecraft shall provide MODIS a maximum 1 orbit average of 245 Watts, a 2 orbit average of 240 Watts, and a maximum peak of 315 Watts electrical power.	Yes	

CEI Compliance to RD

RD Rqmt #	RD Requirement Text	CEI Rqmt #	CEI Rqmt Text	Comply	Compliance Comments
10.2.e.APP.C.2	MOPITT shall have a power allocation of 250 W 1 orbit average, 250 W 2 orbit average, and 250 W peak.	3.1.5.1.2.ac	The spacecraft shall provide MOPITT a maximum 1 orbit and 2 orbit average of 250 Watts each and a maximum peak of 250 Watts electrical power.	Yes	
10.3.APP.C.3	Instrument Data Allocations				
10.3.a.APP.C.3	ASTER shall have a data rate allocation per its UIID.	3.1.5.1.2.j	ASTER shall have a maximum 2-orbit average data rate of 8,300 kbps and a peak data rate of 89,200 kbps	Yes	
10.3.b.APP.C.3	CERES shall have a data rate allocation per its UIID.	3.1.5.1.2.m	Each CERES shall have a maximum 1-orbit average data rate of 20 kbps and a maximum peak data rate of 20 kbps.	Yes	
10.3.c.APP.C.3	MISR shall have a data rate allocation of 4,000 kbps average, 6,500 kbps peak.	3.1.5.1.2.k	MISR shall have a maximum 2-orbit average data rate of 4,000 kbps and a maximum peak data rate of 6,500 kbps.	Yes	
10.3.d.APP.C.3	MODIS shall have a data rate allocation per its UIID.	3.1.5.1.2.l	MODIS shall have a maximum 2-orbit average data rate of 6,200 kbps and a maximum peak data rate of 11,000 kbps.	Yes	
10.3.e.APP.C.3	MOPITT shall have a data rate allocation of 6 kbps average, 6 kbps peak.	3.1.5.1.2.n	MOPITT shall have a maximum 2-orbit average data rate of 6 kbps and a maximum peak data rate of 6 kbps.	Yes	
10.4.APP.C.4	Instrument Thermal Requirements				

CEI Compliance to RD

RD Rqmt #	RD Requirement Text	CEI Rqmt #	CEI Rqmt Text	Comply	Compliance Comments
10.4.a.APP.C.4	ASTER shall be allocated 2 coldplates per its UIID.	3.1.5.1.2.ad	The spacecraft shall provide ASTER two coldplates for thermal control.	Yes	
10.4.b.APP.C.4	CERES shall be allocated 0 coldplates per its UIID.	3.1.5.1.2.ag	The spacecraft shall provide 0 coldplates for CERES.	Yes	
10.4.c.APP.C.4	MISR shall be allocated 0 coldplates, mechanical interfaces shall be maintained between 0-30 degrees C.	3.1.5.1.2.ae	The spacecraft shall provide 0 coldplates for MISR.	Yes	
10.4.d.APP.C.4	MODIS shall be allocated 0 coldplates per its UIID.	3.1.5.1.2.af	The spacecraft shall provide MODIS coldplates per its UIID.	Yes	
10.4.e.APP.C.4	MOPITT shall be allocated 1 coldplate.	3.1.5.1.2.ah	The spacecraft shall provide MOPITT one coldplate for thermal control.	Yes	

MARTIN MARIETTA

EOS–DN–SE&I–040
Rev. A

DESIGN NOTE

TITLE: EOS–AM Spacecraft Energy Balance

AUTHOR: H. Bond

AUTHOR'S MANAGER: S. Carey DATE 8/26/93

SE&I MANAGER: S. Carey DATE 8/26/93

CHIEF ENGINEER: D. Longcoy DATE 8/26/93

REVISIONS

LETTER	DESCRIPTION	DATE	AUTHOR
	Initial Release	10/9/92	H. Bond
A	Update document to EOS–AM Spacecraft PDR	8/25/93	H. Bond

MARTIN MARIETTA

DESIGN NOTE SUMMARY

DN#: EOS–DN–SE&I–040 **Revision:** A **Date:** 8/25/93

Title: EOS–AM Spacecraft Energy Balance

Author: H. Bond **Source ID (ESTA, PD, Memo, etc.):**

Purpose/Questions Answered:

1. Describe the nominal early mission timeline, including the attainment of energy balance on–orbit.
2. Develop Spacecraft power profiles for launch/ascent mode and and survival mode using Spacecraft thermal model estimates of instrument and housekeeping heater power consumption.
3. Determine time margins for recovery from energy balance failure causes, and maximize these time margins within the constraints of the baseline Spacecraft design.

Summary/Answers:

The time margin for recovery from a solar array deployment failure is at least 157 minutes, or 1.6 orbits. This value assumes a one–time maximum allowable battery depth of discharge of 80% and the worst case conditions of 30°C battery pre–launch charging temperature and 153 W of Instrument launch power. For a worst case power generation failure in which the solar array ceases all power generation, the Spacecraft can survive on battery power for about 149 minutes, or 1.5 orbits. For a SAD failure in which the solar array loses the capability to track the sun, the time margin for recovery is bounded by the range of 4.8 to 24.6 orbits.

Recommendations: (Be Specific)	Accepted	Rejected	Baselined	Date
1. Grant MOPITT and ASTER's requests for Instrument power during launch/ascent phase, with the understanding that power may be removed after launch loads have passed. 2. Consider the impact of Instrument–requested launch power in the thermal analysis of the Spacecraft in the LV fairing. 3. Implement a risk mitigation plan for solar array deployment. 4. Maintain a goal of cooling the batteries to about 20°C during charging operations in the LV fairing.				

Open Items/Action Required	Responsible Person	Due Date

Comments

EOS Form 007–2/91

Form Completed By Hannah E. Bond **Date** 9/25/93 **Page** ii **of** 40

TABLE OF CONTENTS

SECTION / PARAGRAPH	TITLE	PAGE
1	SUMMARY	1
2	INTRODUCTION	2
3	ATTAINMENT OF ENERGY BALANCE ON–ORBIT	3
3.1	Nominal Early Mission Timeline	3
3.1.1	Launch	4
3.1.2	Earth Acquisition	5
3.1.3	Solar Array Deployment	8
3.1.4	S–Band Link Acquisition and HGA Deployment	8
3.2	Early Mission Power Profile	9
3.2.1	Spacecraft Bus Equipment	9
3.2.2	Spacecraft Heater Power	14
3.2.3	Instrument Launch Power	15
3.3	Survival Mode Power Profile	17
3.4	Nominal Launch/Ascent Energy Balance	17
4	TIME MARGINS FOR RECOVERY FROM ENERGY BALANCE FAILURES	21
5	SOLAR ARRAY DEPLOYMENT TIME MARGIN	22
5.1	Assessment of the Adequacy of the Solar Array Deployment Time Margin	23
5.1.1	Solar Array Deployment Sequence	24
5.1.2	Possible Failures and Recovery Actions	24
5.1.2.1	First–stage Deployment	24
5.1.2.2	Blanket Deployment	26
5.1.2.3	Sun Tracking	26
5.1.3	Time Required for Recovery	27
5.2	Decreasing Risk Associated With Deployment	27
5.3	Options for Further Increasing Time Margin	28

TABLE OF CONTENTS (Continued)

SECTION / PARAGRAPH	TITLE	PAGE
6	WORST–CASE POWER GENERATION FAILURE	29
7	SOLAR ARRAY TRACKING FAILURE	31
8	CONCLUSIONS AND RECOMMENDATIONS	35
9	REFERENCES	37

APPENDIX A

10	APPENDIX A	38

LIST OF TABLES

TABLE	TITLE	PAGE
I.	Nominal Early Mission Timeline (500 km Perigee Injection Orbit)	5
II.	EOS–AM Power Profile During Launch/Ascent, Excluding Heater Power	11
III.	EOS–AM Spacecraft Survival Mode Power Profile, Excluding Heater Power	19

LIST OF FIGURES

FIGURE	TITLE	PAGE
1.	Spacecraft Mission Phases	3
2.	Summer Solstice Launch	7
3.	EOS–AM Power Profile for Nominal Launch/Ascent (Beta angle = 15 degrees)	13
4.	EOS–AM Power Profile for Case of Solar Array Deployment Failure (Beta angle = 15 degrees)	13
5.	Comparison of EOS–AM Spacecraft Nominal Launch/Ascent Power Profile With and Without Instrument Launch Power (Beta Angle = 15 degrees)	16
6.	EOS–AM Spacecraft Survival Mode Power Profile	18
7.	EOS–AM Battery Depth of Discharge (DOD) Profile During Nominal. Launch/Ascent. Comparison of 20°C and 30°C Battery Charging Temperature Cases. Comparison of Cases With and Without Instrument Launch Power	20
8.	EOS–AM Battery Depth of Discharge (DOD) Profile For the Case of a Solar. Array Deployment Failure. Comparison of Cases with 20°C and 30°C Battery Charging Temperature. Comparison of Cases With and Without Instrument Launch Power	23
9.	Solar Array Deployment Functional Path Diagram	25
10.	EOS–AM Battery Depth of Discharge (DOD) Profile For the Case of a. Worst Case Power Generation Failure	30
11.	EOS–AM Battery Depth of Discharge (DOD) Profile For the Case of a. Solar Array Tracking Failure. Case of cell–side array normal pointing toward zenith (–Z)	33
12.	Solar Array Orientation Assumed for Case of Solar Array Tracking. Failure: Cell–side array normal points toward zenith (–Z)	34

1 SUMMARY

This design note evaluates the capability of the EOS–AM Spacecraft to attain energy balance on–orbit during the launch/ascent phase and to recover energy balance after various types of power subsystem and attitude control failures. An early mission timeline is provided which describes the nominal scenario for attaining energy balance on–orbit during the launch/ascent phase. Spacecraft power profiles are developed for both the launch/ascent and survival operating modes. These Spacecraft power profiles are used to determine the time margins for recovery from three power–critical scenarios: (1) a solar array deployment failure, (2) a complete failure of power generation on–orbit, and (3) an on–orbit failure of the solar array sun–tracking capability.

A number of parameters have changed since the initial release of this design note, as summarized below:

- Instrument Launch Power – This analysis considers the impact of providing 153 W of operational power to Instruments during the launch/ascent phase. MOPITT and ASTER have requested this amount of power in order to actively control the motion of moving mechanisms (e.g. cryocooler pistons, choppers) to prevent damage during launch loads.
- Injection Orbit – The altitude of the injection orbit perigee has been raised from 300 km to 550 km.
- Solar Array Size – The solar array has been resized to reflect smaller power margins required for a maturing Spacecraft design. The new solar array has a nominal end of life (EOL) power output of 5.022 kW, which is 18% less than the nominal output of the former 6.131 kW array design.
- Spacecraft Launch/Ascent and Survival Power Profiles – The Spacecraft average powers at dynamic steady state for launch/ascent mode and survival mode have decreased by about 20% in comparison with the power profiles used in the previous energy balance analysis. This decrease is primarily due to reductions in heater power consumption, as explained in Sections 3.2.1 and 3.2.2.
- Modulation of Equipment Module Heat Transfer – In the initial release of the energy balance analysis, modulation of heat rejection from the recorder equipment module (EM) radiators was recommended as a means of reducing the total Spacecraft heater power consumption by more than 100 W. However, the tape recorders have been replaced by a solid state recorder (SSR) which has a more steady thermal dissipation profile. The smaller thermal transients means that modulation is not required in the new recorder EM, and it is no longer carried as a parameter in the energy balance analysis.
- Early Mission Timeline – The sequence of events during the early mission have changed. Solar array deployment is now assumed to occur simultaneously with the earth acquisition process, and the High Gain Antenna (HGA) is assumed to be deployed in the injection orbit.

- Battery Characteristics – Battery performance has been estimated using characteristic test data from tests using 9 cells of the type to be used on the EOS–AM Spacecraft. Data was used for cells charged at 20°C and at 30°C.
- FDIR Load Shed Criterion – The Electrical Power Subsystem has defined the criterion for autonomous shedding of non–essential Instrument and housekeeping loads to be a battery depth of discarge level of 40%. This value is a lower state of discharge than the 35% criterion which was assumed in the previous analysis, so that it has slightly decreased time margins for recovery from energy balance failures.

As a result of these changes, the time margin for recovery from a solar array deployment failure has remained essentially the same, and the time margins to recover from other energy balance failures have decreased slightly from the previous estimates. However, this analysis concludes that the time margins are still sufficiently large to allow problem identification and recovery actions to be completed.

2 INTRODUCTION

On–orbit energy balance is necessary for the Spacecraft to sustain operations during its full mission life. The energy balance condition is met when the solar array generates enough power during the daytime portion of the orbit to support both Spacecraft operations and battery recharge, so that the batteries can support Spacecraft operations during eclipse. Therefore, energy balance is defined as the batteries achieving a nominal, steady–state depth of discharge (DOD) profile.

During the launch/ascent phase, the Spacecraft is powered only by the batteries until the solar array is deployed and begins tracking the sun. Because each battery nominally has only 50 ampere–hours of stored energy, the events which lead to array deployment and the achievement of energy balance are time critical. Once the array is deployed, it can generate power when the Spacecraft is in either the nominal earth–pointing attitude or a sun–pointing attitude. Then, operations become non–time–critical because the Spacecraft has enough power to support at least survival operations indefinitely.

The consequences of failing to achieve energy balance soon after launch threaten the success of the mission. If adequate survival power is not available to the Spacecraft, heaters will not operate and components will be exposed to temperatures below their survival limits, which may cause component failures. Also, if the batteries are drained before the solar array has been deployed, power will not be available to run the mast motor and deployment electronics unit (DEU) during deployment operations. Therefore, the time in which actions can be taken to recover from a solar array deployment failure is limited.

On–orbit energy balance failures are also a concern for the safety of the EOS–AM mission. Recovery actions become time critical in a power–critical situation because survival heaters and minimum housekeeping services must be powered by diminishing battery stored energy resources until power generation is sufficient to meet operating power demands.

3 ATTAINMENT OF ENERGY BALANCE ON–ORBIT

3.1 Nominal Early Mission Timeline

The early mission timeline is the sequence of events which occur between the time that the Spacecraft is switched to internal power on the launch pad until the first propulsive burns are performed to raise the Spacecraft from the injection orbit to the operational orbit. Therefore, the timeline covers events which occur during the launch/ascent and orbit acquisition initialization mission phases, as shown in Figure 1. During these phases, the Spacecraft operates in launch/ascent mode and standby mode.

The nominal early mission timeline is summarized in Table I. Figure 2 illustrates apogee, perigee, and the timing of the solar array deployment and sun–tracking. Launch is assumed to occur at the summer solstice.

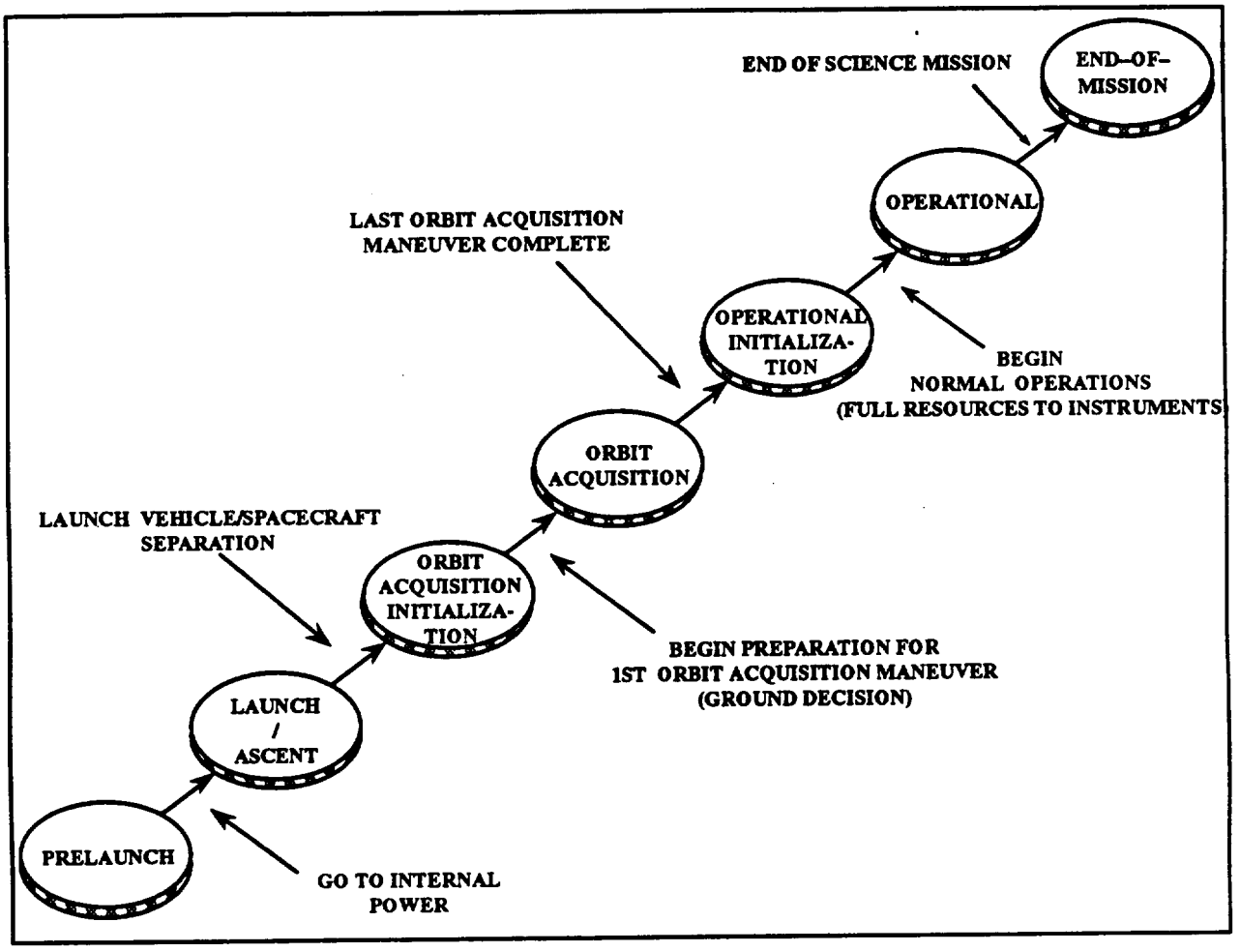

Figure 1. Spacecraft Mission Phases

In this revision of the energy balance analysis, solar array assembly (SAA) deployment has been scheduled to occur immediately following separation of the Spacecraft from the launch vehicle. Deployment of the array prior to completion of the earth acquisition process is feasible because the injection orbit has been raised to 550 km from 300 km. Lower drag at the higher altitude means that attitude control thrusters will not be required to achieve earth acquisition. The advantages of deploying the array as soon as possible following separation from the launch vehicle are:

a. to allow immediate entry into sun–pointing safe in the event of earth acquisition failure

b. to permit detection of any anomalies in the deployment sequence as soon as possible to allow the greatest time margins for recovery

However, the deployment of the solar array concurrently with earth acquisition does not mean that the array will begin to generate power sooner on orbit than if earth acquisition and array deployment were performed in series. Because the solar array deploys with the solar cells initially pointing toward the earth, the array must be rotated before the cells are illuminated by the solar vector. There is not enough time to perform this rotation before the Spacecraft enters the first eclipse.

Although the current baseline is to deploy the solar array concurrently with earth acquisition, there remains an issue of thermal distortion of the array. The array deploys with the blanket of solar cells facing toward nadir, so that the sun will illuminate the rear of the blanket. If the array does not begin to rotate, the solar vector will be perpendicular to the cell normal (i.e. the sun will shine directly on the thin side of the array) as the Spacecraft enters the first eclipse. Both of these orientations of the array may cause excessive thermal distortion or warpage. The solar array vendor is planning to conduct a thermal analysis of daytime deployment before the SAA CDR in order to assess any risks. If thermal distortion is excessive, deployment can be delayed until the eclipse period.

3.1.1 Launch

Before launch, the commands to accomplish all of the activities of the launch/ascent phase will be stored in the SCC. On–board logic will enable the Spacecraft to autonomously execute the early mission activities, including earth acquisition, solar array deployment, acquisition of an S–band link through TDRSS, and HGA deployment. Ground command will be able to override any stored command sequence.

About 5 minutes prior to liftoff while the Spacecraft is on the launch pad, the Launch Team will switch the Spacecraft to internal power and disconnect the T–5 umbilical. From the time of go to internal power until the solar array is able to generate power on–orbit, the Spacecraft is operating on energy stored in the batteries, so that the intervening early mission activities leading up to solar array deployment and sun–tracking are time–critical. All event times throughout this memo are referenced from "go to internal power" (G) to indicate how long the Spacecraft is operating on its batteries before solar array sun tracking begins.

This document assumes that the launch vehicle (LV) will be the Atlas IIAS. Approximately 5 minutes after the Spacecraft has switched to internal power, the Launch Vehicle booster engine and the first of two pair of solid rocket boosters will be ignited and liftoff will occur. The second pair

of solid rocket boosters will be ignited about 1 minute after liftoff. After the booster engine has been cutoff, the booster package will be jettisoned, followed by the jettison of the payload fairing. Then, the Centaur upper stage will separate from the Atlas vehicle. The Centaur engines will carry the Spacecraft the rest of the way to the 550 km perigee of its injection orbit. Separation of the Spacecraft from the Centaur will occur approximately 20 minutes after the Spacecraft was switched to internal power. The nominal timeline assumes that the LV injects the Spacecraft into the injection orbit at a nominal attitude so that the Earth is in the field of view of the earth sensors at separation.

3.1.2 Earth Acquisition

The separation event will enable the Launch Vehicle/Spacecraft separation flag which is a hardline signal to the Attitude Control Electronics (ACE), which provides telemetry of the signal to the Spacecraft Controls Computer (SCC). Upon receiving this flag, the Spacecraft Failure Detection, Isolation, and Recovery (FDIR) system will be enabled. The SCC will wait about 3 seconds after receiving the LV/Spacecraft separation flag before commanding rate nulling, in order to allow the Spacecraft to drift away from the LV. Simultaneous 3–axis rate nulling will be accomplished by reaction wheels if rates are within a certain threshold; otherwise rate nulling will be accomplished by firing attitude control thrusters.

Once all axes' rates have been nulled for 5 seconds, the SCC will command the reaction wheels to assume control of the Spacecraft attitude, and the GN&C FDIR algorithm will check the earth sensors (ESAs) for an indication that the Earth is in the field of view (FOV) of both of the sensors. If the Earth is in both of the ESA's FOVs, then the SCC will command local vertical acquisition in which both roll and pitch signals from the ESAs will be nulled.

Table I. Nominal Early Mission Timeline (500 km Perigee Injection Orbit)

Event	Estimated Time
Go to internal power	G
Disconnect T–5 Umbilical	G + TBD
Ignite Stage 0 and liftoff (timeline assumes LV is Atlas IIAS/Centaur)	G + 5 min
Jettison first pair of Solid Rocket Boosters	G + 6.6
Jettison second pair of Solid Rocket Boosters	G + 7.5
Booster Engine Cutoff (BECO)	G + 8
Booster Package Jettison	G + 8 (just after BECO)
Jettison Payload Fairing	G + 9
Atlas Sustainer Engine Cutoff (SECO)	G + 10
Atlas/Centaur Separation	G + 10 (just after SECO)
Centaur First Main Engine Start (MES1)	G + 10
Centaur First Main Engine Cutoff (MECO1)	G + 19

Table I. Nominal Early Mission Timeline (500 km Perigee Injection Orbit) (continued)

Event	Estimated Time
Alignment to Separation Attitude	G + 19.5
Launch Vehicle/Spacecraft Separation	G + 20
First perigee	G + 20
Launch Vehicle/Spacecraft Separation Flag Enabled	G + 20
SCC commands Rate nulling of all Spacecraft axes	G + 20:03
Rate nulling accomplished	G + 21
SCC commands RWA wheel control of S/C attitude	G + 21
Check for Earth in FOV of either ESA	G + 21
SCC commands roll/pitch acquisition	G + 22
SCC commands Solar Array hinge deployment	G + 22.5
Solar Array hinge deployment is completed	G + 24
SCC commands Solar Array blanket deployment	G + 25
Roll and Pitch signals from the ESA are nulled	G + 27
SCC commands yaw axis acquisition	G + 27
Solar Array blanket deployment is completed	G + 37.7
SCC sets flag indicating completion of Earth Acquisition	G + 39
Enter first eclipse (summer solstice launch)	G + 47
Begin Rotating Solar Array at 1ω rate	G + 65
Pass first apogee	G + 69.5
Exit first eclipse	G + 82
Solar Array Begins to Track the Sun	G + 82
Receive Coarse Orbit Determination From Ground (must receive in order to slew the HGA to acquire sight to TDRS)	G + TBD
SCC commands activation of HGA release mechanisms	G + 115
Pass second perigee	G + 118
HGA deployment completed	G + 124
SCC commands HGA slew to acquire sight to TDRSS	G + TBD
S–band link to TDRSS established through HGA	G + TBD
First Delta–V Burn to Circularize Operational Orbit (assume third apogee is the earliest possible time for this event)	G + 267

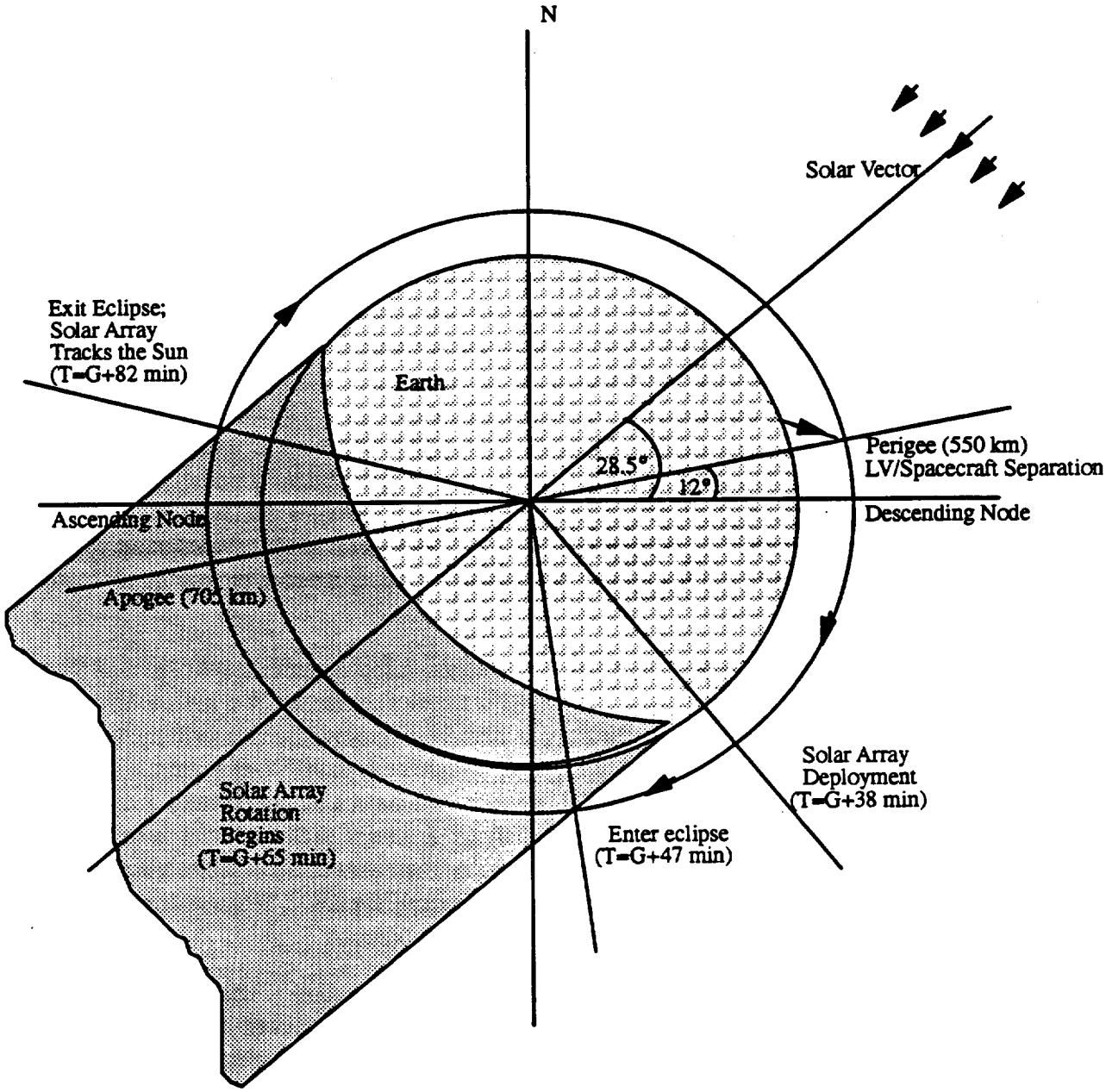

Figure 2. Summer Solstice Launch

Once roll and pitch attitude and roll/pitch/yaw rates have been controlled to within threshold limits for 15 seconds, the SCC will command yaw acquisition. Yaw acquisition is accomplished under reaction wheel control by nulling both the roll and pitch signals from the ESAs and the estimated yaw attitude (obtained through the gyrocompassing technique). When roll/pitch/yaw attitudes and rates have been maintained within threshold limits for 30 seconds, the SCC will set a flag indicating completion of Earth acquisition.

3.1.3 Solar Array Deployment

Concurrently with the earth acquisition process (which begins with the command to acquire local vertical), the SCC will command the deployment of the solar array. The solar array deployment is achieved in two phases. The first phase is the deployment of the elevation hinge, in which a release mechanism is activated to allow the spring–driven elevation hinge to deploy the cannister and the blanket box from the launch position to the operational position. The elevation hinge automatically latches at end–of–travel. The second phase is blanket deployment. Once the the elevation hinge has latched, motor–driven separation of the blanket box top is completed. Then, the Deployment Electronics Unit (DEU) commands the mast motor to drive the continuous coilable longeron mast out of the cannister until it reaches its maximum extension. Telemetry is available to indicate the status of the deployment, including: angular position of the elevation hinge, elevation hinge latch status, blanket box top separation status, rate of mast extension, and boom deployment completion status.

Although the solar array will be deployed before the Spacecraft enters the first eclipse, as shown in Figure 1, the array will not begin sun–tracking until the Spacecraft exits the first eclipse, at 82 minutes after go to internal power. When the array is initially deployed, the side with the solar cells faces toward the earth. Therefore, the array must be slewed more than 90° to point the cells toward the sun, and, even at the fastest slew rate of 3ω, the slew would not be completed until after the Spacecraft had entered the first eclipse. This analysis assumes that the solar array will be commanded by stored commands to begin rotating at its normal rate of 1ω when the Spacecraft is in the solar midnight position, 45 minutes after separation from the LV. Then, the array will be in position to track the sun when the Spacecraft exits the first eclipse.

Because the solar array will not actually begin tracking the sun until G + 82 minutes, the variation between shortest and longest deployment durations will not affect Spacecraft energy balance time margins. Elevation hinge deployment is estimated to take between 1 minute (best case) and 2 minutes (worst case). Blanket deployment is estimated to require 12.7 minutes nominally, with best and worst case estimates of 11.5 minutes and 15 minutes, respectively.

3.1.4 S–Band Link Acquisition and HGA Deployment

The Flight Operations Team (FOT) will monitor the health and safety of the Spacecraft during the launch/ascent sequence via various S–band communications links. Before the Spacecraft is switched to internal power, the Command and Telemetry Interface Unit (CTIU) will have a hard–wire connection to the T–5 umbilical. After the umbilical is removed, the CTIU will have a hard–wire connection to the LV, and the Spacecraft telemetry will be downlinked as part of the LV

telemetry stream. The S–band transponders will be launched in automatic–on mode, with both receivers operating continuously. When a signal radiated by TDRSS is picked up by either receiver, the transmitter will automatically come on. Therefore, the Spacecraft should be able to establish an S–band link through the omni antennas very soon after separation from the LV. Although the Spacecraft will have this S–band communication link through the omnis to TDRSS, it is desirable to deploy the HGA in the injection orbit in order to have higher link margins.

The release mechanisms for the HGA are five shaped memory metal mechanisms which each require about 50 W of heater power to activate. Therefore, an additional power load of 250 W will occur for the 9 minutes required to activate the release mechanisms. This release can occur as soon as the solar array deployment is completed. For the purposes of the power profile in Table II and Figure 3, it was assumed that the release mechanisms are activated at G + 115 minutes, midway through the second daylight period. HGA deployment can be activated either by stored command or by ground command, but the method is still to be determined.

After the release mechanisms are activated by heaters, the spring–driven boom hinge will deploy the antenna from the stowed position to the operational position. The boom hinge will automatically latch at end–of–travel. Telemetry to monitor the status of the HGA deployment will consist of a potentiometer signal which indicates the angle of the boom relative to its stowed position. Once ephemeris information has been uplinked from the ground, the SCC will be able to slew the HGA to establish a line of sight to one of the TDRS spacecraft, and the Spacecraft may begin to use the HGA for S–band communication.

3.2 Early Mission Power Profile

A transient power profile was generated for the Launch/Ascent and Orbit Acquisition Initialization phases, which span the time from disconnection of the T–5 umbilical to the first delta–V burn. An attempt was made to minimize power consumption during these periods, in order to provide the longest battery operating time.

Table II summarizes the Spacecraft power profile during launch/ascent, excluding heater power consumption. Figure 3 is the profile of total Spacecraft power consumption during nominal launch ascent, including both the housekeeping power summarized in Table II as well as the heater power required for Instruments and Spacecraft bus equipment. Figure 4 is the profile of total Spacecraft power consumption for the scenario of a solar array deployment failure.

3.2.1 Spacecraft Bus Equipment

Generally, the GN&C, EPS, and TCS subsystems are at full performance during launch/ascent. Instruments are not operational at launch, so that the science data handling equipment and K–band and X–band communications equipment do not operate during this mission phase. The following bullets list the major assumptions on which the power profile in Table II and Figure 3 is based:

- All component power consumptions are based on beginning of life estimates plus a contingency based on component accuracy class. The power consumption of subcontracted components (e.g. HGA, SSSTs, ESAs, etc.)

is based on the power allocations in the component contract end item specifications. A 10% contingency has been added to all heater power estimates.

- Prior to the jettisoning of the LV fairing at G + 9 minutes, the stowed HGA is assumed to consume no heater power so that its power level is 13 W to operate one antenna controller. Once the fairing is jettisoned, the HGA is assumed to consume its survival power allocation of 50 W. When the HGA is deployed, its power consumption is assumed to step up to its full tracking mode power allocation, 135 W.

- The RWAs are at standby power levels (6.3 W each) during ground test and launch. After body rates are nulled at about G + 21 minutes, the RWAs assume control of Spacecraft attitude and their average power consumption increases to 15.75 W each.

- The Solid State Recorder (SSR) is assumed to have only one data control unit (DCU) and no memory units operational. The DCU is specified to have a minimum storage capability of 384 Mbytes, which is sufficient for storing up to four orbits worth of Spacecraft housekeeping data. Therefore, the data memory units need not be operational during launch/ascent. The power load of one DCU is 27 W.

- At the beginning of the launch/ascent phase, the propulsion subsystem (PROPS) is assumed to be configured for its Prelaunch/Ascent Standby Mode in which it is prepared to perform tip–off maneuvers when the Spacecraft separates from the LV. In this mode, the propulsion module electronics assembly (PMEA) operates at a 50% duty cycle, six 1–lb cat bed heaters are operational, and the pressure transducer is operational. The total power consumption of the PROPS in Prelaunch/Ascent Standby Mode is 33.4 W. Once the RWAs assume control of Spacecraft attitude at G + 21 minutes, all of the PROPS equipment except the pressure transducer is assumed to be turned off. Then, the PROPS consumes only 0.6 W.

- The array drive electronics (ADE) is assumed to be powered during launch, with a power consumption of 9.2 W.

- The S–band transponders are assumed to be operating with both receivers on and one transmitter on continuously. The combined power consumption is 76 W.

- Heater turn–ons are based on keeping non–operating equipment (both instrument and housekeeping) at survival temperature limits, and operating equipment at operational limits.

The major difference between the nominal launch/ascent power profile in Figure 3 and the profile for the case of a solar array deployment failure in Figure 4 is that the HGA power consumption remains at 50 W throughout the deployment failure scenario. It is assumed that the HGA will not be deployed until after the solar array has been deployed and begins to track the sun.

Table II. EOS–AM Power Profile During Launch/Ascent, Excluding Heater Power

SUBSYSTEM	COMPONENT	TIME AFTER GO TO INTERNAL POWER [MINUTES]: 0	5	10	15	20	25	30	35	40	45	50	55	60	65	70	75	80	85	90
EAS		3.0	3.0	3.0	3.0	3.0	3.0	3.0	3.0	3.0	3.0	3.0	3.0	3.0	3.0	3.0	3.0	3.0	3.0	3.0
TCS	HCEs	73.0	73.0	73.0	73.0	73.0	73.0	73.0	73.0	73.0	73.0	73.0	73.0	73.0	73.0	73.0	73.0	73.0	73.0	73.0
	CPHTS HCEs	13.2	13.2	13.2	13.2	13.2	13.2	13.2	13.2	13.2	13.2	13.2	13.2	13.2	13.2	13.2	13.2	13.2	13.2	13.2
GN&C	MTRs	5.0	5.0	5.0	5.0	5.0	5.0	5.0	5.0	5.0	5.0	5.0	5.0	5.0	5.0	5.0	5.0	5.0	5.0	5.0
	RWAs	25.2	25.2	25.2	25.2	25.2	63.0	63.0	63.0	63.0	63.0	63.0	63.0	63.0	63.0	63.0	63.0	63.0	63.0	63.0
	ESA	21.0	21.0	21.0	21.0	21.0	21.0	21.0	21.0	21.0	21.0	21.0	21.0	21.0	21.0	21.0	21.0	21.0	21.0	21.0
	FSS	2.8	2.8	2.8	2.8	2.8	2.8	2.8	2.8	2.8	2.8	2.8	2.8	2.8	2.8	2.8	2.8	2.8	2.8	2.8
	SSSTs	26.0	26.0	26.0	26.0	26.0	26.0	26.0	26.0	26.0	26.0	26.0	26.0	26.0	26.0	26.0	26.0	26.0	26.0	26.0
	TAMs	1.9	1.9	1.9	1.9	1.9	1.9	1.9	1.9	1.9	1.9	1.9	1.9	1.9	1.9	1.9	1.9	1.9	1.9	1.9
	IRU	28.0	28.0	28.0	28.0	28.0	28.0	28.0	28.0	28.0	28.0	28.0	28.0	28.0	28.0	28.0	28.0	28.0	28.0	28.0
	ACE	48.3	48.3	48.3	48.3	48.3	48.3	48.3	48.3	48.3	48.3	48.3	48.3	48.3	48.3	48.3	48.3	48.3	48.3	48.3
EPS	BPC	36.0	36.0	36.0	36.0	36.0	36.0	36.0	36.0	36.0	36.0	36.0	36.0	36.0	36.0	36.0	36.0	36.0	36.0	36.0
	Battery Panel	6.6	6.6	6.6	6.6	6.6	6.6	6.6	6.6	6.6	6.6	6.6	6.6	6.6	6.6	6.6	6.6	6.6	6.6	6.6
	Hex Battery Panel	6.6	6.6	6.6	6.6	6.6	6.6	6.6	6.6	6.6	6.6	6.6	6.6	6.6	6.6	6.6	6.6	6.6	6.6	6.6
	PDU	38.4	38.4	38.4	38.4	38.4	38.4	38.4	38.4	38.4	38.4	38.4	38.4	38.4	38.4	38.4	38.4	38.4	38.4	38.4
	FDBs	1.1	1.1	1.1	1.1	1.1	1.1	1.1	1.1	1.1	1.1	1.1	1.1	1.1	1.1	1.1	1.1	1.1	1.1	1.1
	Propulsion EPC	4.0	4.0	4.0	4.0	4.0	0.0	0.0	0.0	0.0	0.0	0.0	0.0	0.0	0.0	0.0	0.0	0.0	0.0	0.0
	S/A Assembly DEU	10.0	10.0	10.0	10.0	10.0	15.0	15.0	15.0	10.0	0.0	0.0	0.0	0.0	0.0	0.0	0.0	0.0	0.0	0.0
	S/A Ass'y Mast Motor	0.0	0.0	0.0	0.0	0.0	55.0	55.0	55.0	0.0	0.0	0.0	0.0	0.0	0.0	0.0	0.0	0.0	0.0	0.0
	ADE	9.2	9.2	9.2	9.2	9.2	9.2	9.2	9.2	9.2	9.2	9.2	9.2	9.2	9.2	9.2	9.2	9.2	9.2	9.2
	SAD	0.0	0.0	0.0	0.0	0.0	0.0	0.0	0.0	0.0	0.0	0.0	0.0	0.0	0.0	0.0	0.0	0.0	0.0	0.0
	SSU	43.8	43.8	43.8	43.8	43.8	43.8	43.8	43.8	43.8	43.8	43.8	43.8	43.8	43.8	43.8	43.8	43.8	43.8	43.8
	PSU	15.5	15.5	15.5	15.5	15.5	15.5	15.5	15.5	15.5	15.5	15.5	15.5	15.5	15.5	15.5	15.5	15.5	15.5	15.5
C&DH	SCC	17.0	17.0	17.0	17.0	17.0	17.0	17.0	17.0	17.0	17.0	17.0	17.0	17.0	17.0	17.0	17.0	17.0	17.0	17.0
	CTIU	62.2	62.2	62.2	62.2	62.2	62.2	62.2	62.2	62.2	62.2	62.2	62.2	62.2	62.2	62.2	62.2	62.2	62.2	62.2
	BDUs - H/K	55.2	55.2	55.2	55.2	55.2	55.2	55.2	55.2	55.2	55.2	55.2	55.2	55.2	55.2	55.2	55.2	55.2	55.2	55.2
	BDUs - Instr	32.4	32.4	32.4	32.4	32.4	32.4	32.4	32.4	32.4	32.4	32.4	32.4	32.4	32.4	32.4	32.4	32.4	32.4	32.4
	SSR	27.0	27.0	27.0	27.0	27.0	27.0	27.0	27.0	27.0	27.0	27.0	27.0	27.0	27.0	27.0	27.0	27.0	27.0	27.0
	SFE	0.0	0.0	0.0	0.0	0.0	0.0	0.0	0.0	0.0	0.0	0.0	0.0	0.0	0.0	0.0	0.0	0.0	0.0	0.0
COMM	S-band Transponder	76.0	76.0	76.0	76.0	76.0	76.0	76.0	76.0	76.0	76.0	76.0	76.0	76.0	76.0	76.0	76.0	76.0	76.0	76.0
	SBIU	0.0	0.0	0.0	0.0	0.0	0.0	0.0	0.0	0.0	0.0	0.0	0.0	0.0	0.0	0.0	0.0	0.0	0.0	0.0
	BRF	0.0	0.0	0.0	0.0	0.0	0.0	0.0	0.0	0.0	0.0	0.0	0.0	0.0	0.0	0.0	0.0	0.0	0.0	0.0
	KSA Modulator	0.0	0.0	0.0	0.0	0.0	0.0	0.0	0.0	0.0	0.0	0.0	0.0	0.0	0.0	0.0	0.0	0.0	0.0	0.0
	MO	17.6	17.6	17.6	17.6	17.6	17.6	17.6	17.6	17.6	17.6	17.6	17.6	17.6	17.6	17.6	17.6	17.6	17.6	17.6
	HGA	13.0	13.0	50.0	50.0	50.0	50.0	50.0	50.0	50.0	50.0	50.0	50.0	50.0	50.0	50.0	50.0	50.0	50.0	50.0
	HGA release mech.	0.0	0.0	0.0	0.0	0.0	0.0	0.0	0.0	0.0	0.0	0.0	0.0	0.0	0.0	0.0	0.0	0.0	0.0	0.0
	DAS	0.0	0.0	0.0	0.0	0.0	0.0	0.0	0.0	0.0	0.0	0.0	0.0	0.0	0.0	0.0	0.0	0.0	0.0	0.0
PROP	PMEA	5.0	5.0	5.0	5.0	5.0	0.0	0.0	0.0	0.0	0.0	0.0	0.0	0.0	0.0	0.0	0.0	0.0	0.0	0.0
	Pressure Transducer	0.6	0.6	0.6	0.6	0.6	0.6	0.6	0.6	0.6	0.6	0.6	0.6	0.6	0.6	0.6	0.6	0.6	0.6	0.6
	1 lb thrusters	24.1	24.1	24.1	24.1	24.1	0.0	0.0	0.0	0.0	0.0	0.0	0.0	0.0	0.0	0.0	0.0	0.0	0.0	0.0
	5 lb thrusters	0.0	0.0	0.0	0.0	0.0	0.0	0.0	0.0	0.0	0.0	0.0	0.0	0.0	0.0	0.0	0.0	0.0	0.0	0.0
	Cat Bed Heaters	3.7	3.7	3.7	3.7	3.7	0.0	0.0	0.0	0.0	0.0	0.0	0.0	0.0	0.0	0.0	0.0	0.0	0.0	0.0
Total S/C Power (Excluding Heaters):		752.4	752.4	789.4	789.4	789.4	850.4	850.4	850.4	790.4	780.4	780.4	780.4	780.4	780.4	780.4	780.4	780.4	780.4	780.4

Table II. (Cont'd) EOS-AM Power Profile During Nominal Launch/Ascent, Excluding Heater Power

SUBSYSTEM	COMPONENT	95	100	105	110	115	120	125	130	135	140	145	150	200	300	400	500	600	700	800	900	1000
EAS		3.0	3.0	3.0	3.0	3.0	3.0	3.0	3.0	3.0	3.0	3.0	3.0	3.0	3.0	3.0	3.0	3.0	3.0	3.0	3.0	3.0
TCS	HCEs	73.0	73.0	73.0	73.0	73.0	73.0	73.0	73.0	73.0	73.0	73.0	73.0	73.0	73.0	73.0	73.0	73.0	73.0	73.0	73.0	73.0
	CPHTS HCEs	13.2	13.2	13.2	13.2	13.2	13.2	13.2	13.2	13.2	13.2	13.2	13.2	13.2	13.2	13.2	13.2	13.2	13.2	13.2	13.2	13.2
GN&C	MTRs	5.0	5.0	5.0	5.0	5.0	5.0	5.0	5.0	5.0	5.0	5.0	5.0	5.0	5.0	5.0	5.0	5.0	5.0	5.0	5.0	5.0
	RWAs	63.0	63.0	63.0	63.0	63.0	63.0	63.0	63.0	63.0	63.0	63.0	63.0	63.0	63.0	63.0	63.0	63.0	63.0	63.0	63.0	63.0
	ESA	21.0	21.0	21.0	21.0	21.0	21.0	21.0	21.0	21.0	21.0	21.0	21.0	21.0	21.0	21.0	21.0	21.0	21.0	21.0	21.0	21.0
	FSS	2.8	2.8	2.8	2.8	2.8	2.8	2.8	2.8	2.8	2.8	2.8	2.8	2.8	2.8	2.8	2.8	2.8	2.8	2.8	2.8	2.8
	SSSTs	26.0	26.0	26.0	26.0	26.0	26.0	26.0	26.0	26.0	26.0	26.0	26.0	26.0	26.0	26.0	26.0	26.0	26.0	26.0	26.0	26.0
	TAMs	1.9	1.9	1.9	1.9	1.9	1.9	1.9	1.9	1.9	1.9	1.9	1.9	1.9	1.9	1.9	1.9	1.9	1.9	1.9	1.9	1.9
	IRU	28.0	28.0	28.0	28.0	28.0	28.0	28.0	28.0	28.0	28.0	28.0	28.0	28.0	28.0	28.0	28.0	28.0	28.0	28.0	28.0	28.0
	ACE	48.3	48.3	48.3	48.3	48.3	48.3	48.3	48.3	48.3	48.3	48.3	48.3	48.3	48.3	48.3	48.3	48.3	48.3	48.3	48.3	48.3
EPS	BPC	36.0	36.0	36.0	36.0	36.0	36.0	36.0	36.0	36.0	36.0	36.0	36.0	36.0	36.0	36.0	36.0	36.0	36.0	36.0	36.0	36.0
	Battery Panel	6.6	6.6	6.6	6.6	6.6	6.6	6.6	6.6	6.6	6.6	6.6	6.6	6.6	6.6	6.6	6.6	6.6	6.6	6.6	6.6	6.6
	Hex Battery Panel	6.6	6.6	6.6	6.6	6.6	6.6	6.6	6.6	6.6	6.6	6.6	6.6	6.6	6.6	6.6	6.6	6.6	6.6	6.6	6.6	6.6
	PDU	38.4	38.4	38.4	38.4	38.4	38.4	38.4	38.4	38.4	38.4	38.4	38.4	38.4	38.4	38.4	38.4	38.4	38.4	38.4	38.4	38.4
	FDBs	1.1	1.1	1.1	1.1	1.1	1.1	1.1	1.1	1.1	1.1	1.1	1.1	1.1	1.1	1.1	1.1	1.1	1.1	1.1	1.1	1.1
	Propulsion EPC	0.0	0.0	0.0	0.0	0.0	0.0	0.0	0.0	0.0	0.0	0.0	0.0	0.0	0.0	0.0	0.0	0.0	0.0	0.0	0.0	0.0
	S/A Assembly DEU	0.0	0.0	0.0	0.0	0.0	0.0	0.0	0.0	0.0	0.0	0.0	0.0	0.0	0.0	0.0	0.0	0.0	0.0	0.0	0.0	0.0
	S/A Ass'y Mast Motor	0.0	0.0	0.0	0.0	0.0	0.0	0.0	0.0	0.0	0.0	0.0	0.0	0.0	0.0	0.0	0.0	0.0	0.0	0.0	0.0	0.0
	ADE	9.2	9.2	9.2	9.2	9.2	9.2	9.2	9.2	9.2	9.2	9.2	9.2	9.2	9.2	9.2	9.2	9.2	9.2	9.2	9.2	9.2
	SAD	0.0	0.0	0.0	0.0	0.0	0.0	0.0	0.0	0.0	0.0	0.0	0.0	0.0	0.0	0.0	0.0	0.0	0.0	0.0	0.0	0.0
	SSU	43.8	43.8	43.8	43.8	43.8	43.8	43.8	43.8	43.8	43.8	43.8	43.8	43.8	43.8	43.8	43.8	43.8	43.8	43.8	43.8	43.8
	PSU	15.5	15.5	15.5	15.5	15.5	15.5	15.5	15.5	15.5	15.5	15.5	15.5	15.5	15.5	15.5	15.5	15.5	15.5	15.5	15.5	15.5
C&DH	SCC	17.0	17.0	17.0	17.0	17.0	17.0	17.0	17.0	17.0	17.0	17.0	17.0	17.0	17.0	17.0	17.0	17.0	17.0	17.0	17.0	17.0
	CTIU	62.2	62.2	62.2	62.2	62.2	62.2	62.2	62.2	62.2	62.2	62.2	62.2	62.2	62.2	62.2	62.2	62.2	62.2	62.2	62.2	62.2
	BDUs - H/K	55.2	55.2	55.2	55.2	55.2	55.2	55.2	55.2	55.2	55.2	55.2	55.2	55.2	55.2	55.2	55.2	55.2	55.2	55.2	55.2	55.2
	BDUs - Instr	32.4	32.4	32.4	32.4	32.4	32.4	32.4	32.4	32.4	32.4	32.4	32.4	32.4	32.4	32.4	32.4	32.4	32.4	32.4	32.4	32.4
	SSR	27.0	27.0	27.0	27.0	27.0	27.0	27.0	27.0	27.0	27.0	27.0	27.0	27.0	27.0	27.0	27.0	27.0	27.0	27.0	27.0	27.0
	SFE	0.0	0.0	0.0	0.0	0.0	0.0	0.0	0.0	0.0	0.0	0.0	0.0	0.0	0.0	0.0	0.0	0.0	0.0	0.0	0.0	0.0
COMM	S-band Transponder	76.0	76.0	76.0	76.0	76.0	76.0	76.0	76.0	76.0	76.0	76.0	76.0	76.0	76.0	76.0	76.0	76.0	76.0	76.0	76.0	76.0
	SBIU	0.0	0.0	0.0	0.0	0.0	0.0	0.0	0.0	0.0	0.0	0.0	0.0	0.0	0.0	0.0	0.0	0.0	0.0	0.0	0.0	0.0
	BRF	0.0	0.0	0.0	0.0	0.0	0.0	0.0	0.0	0.0	0.0	0.0	0.0	0.0	0.0	0.0	0.0	0.0	0.0	0.0	0.0	0.0
	KSA Modulator	0.0	0.0	0.0	0.0	0.0	0.0	0.0	0.0	0.0	0.0	0.0	0.0	0.0	0.0	0.0	0.0	0.0	0.0	0.0	0.0	0.0
	MO	17.6	17.6	17.6	17.6	17.6	17.6	17.6	17.6	17.6	17.6	17.6	17.6	17.6	17.6	17.6	17.6	17.6	17.6	17.6	17.6	17.6
	HGA	50.0	50.0	50.0	50.0	50.0	50.0	135.0	135.0	135.0	135.0	135.0	135.0	135.0	135.0	135.0	135.0	135.0	135.0	135.0	135.0	135.0
	HGA release mech.	0.0	0.0	0.0	0.0	250.0	250.0	0.0	0.0	0.0	0.0	0.0	0.0	0.0	0.0	0.0	0.0	0.0	0.0	0.0	0.0	0.0
	DAS	0.0	0.0	0.0	0.0	0.0	0.0	0.0	0.0	0.0	0.0	0.0	0.0	0.0	0.0	0.0	0.0	0.0	0.0	0.0	0.0	0.0
PROP	PMEA	0.0	0.0	0.0	0.0	0.0	0.0	0.0	0.0	0.0	0.0	0.0	0.0	0.0	0.0	0.0	0.0	0.0	0.0	0.0	0.0	0.0
	Pressure Transducer	0.6	0.6	0.6	0.6	0.6	0.6	0.6	0.6	0.6	0.6	0.6	0.6	0.6	0.6	0.6	0.6	0.6	0.6	0.6	0.6	0.6
	1 lb thrusters	0.0	0.0	0.0	0.0	0.0	0.0	0.0	0.0	0.0	0.0	0.0	0.0	0.0	0.0	0.0	0.0	0.0	0.0	0.0	0.0	0.0
	5 lb thrusters	0.0	0.0	0.0	0.0	0.0	0.0	0.0	0.0	0.0	0.0	0.0	0.0	0.0	0.0	0.0	0.0	0.0	0.0	0.0	0.0	0.0
	Cat Bed Heaters	0.0	0.0	0.0	0.0	0.0	0.0	0.0	0.0	0.0	0.0	0.0	0.0	0.0	0.0	0.0	0.0	0.0	0.0	0.0	0.0	0.0
Total S/C Power (Excluding Heaters):		780.4	780.4	780.4	780.4	1030.4	1030.4	865.4	865.4	865.4	865.4	865.4	865.4	865.4	865.4	865.4	865.4	865.4	865.4	865.4	865.4	865.4

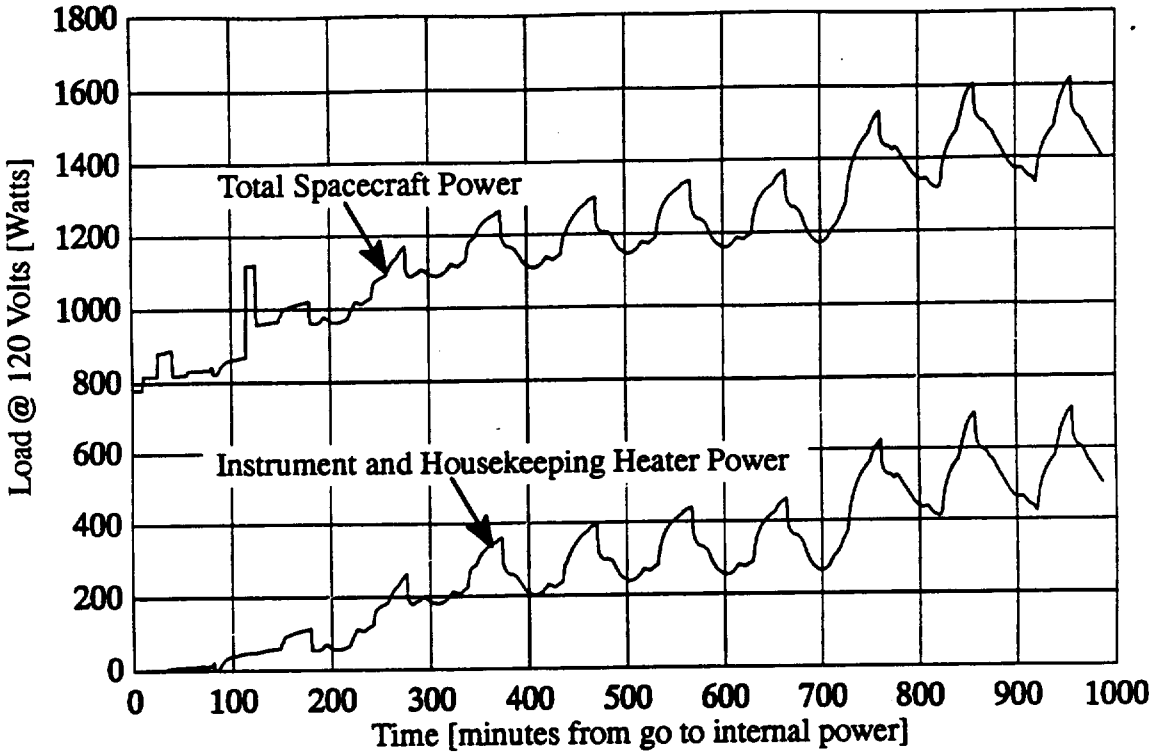

Figure 3. EOS–AM Power Profile for Nominal Launch/Ascent (Beta angle = 15 degrees)

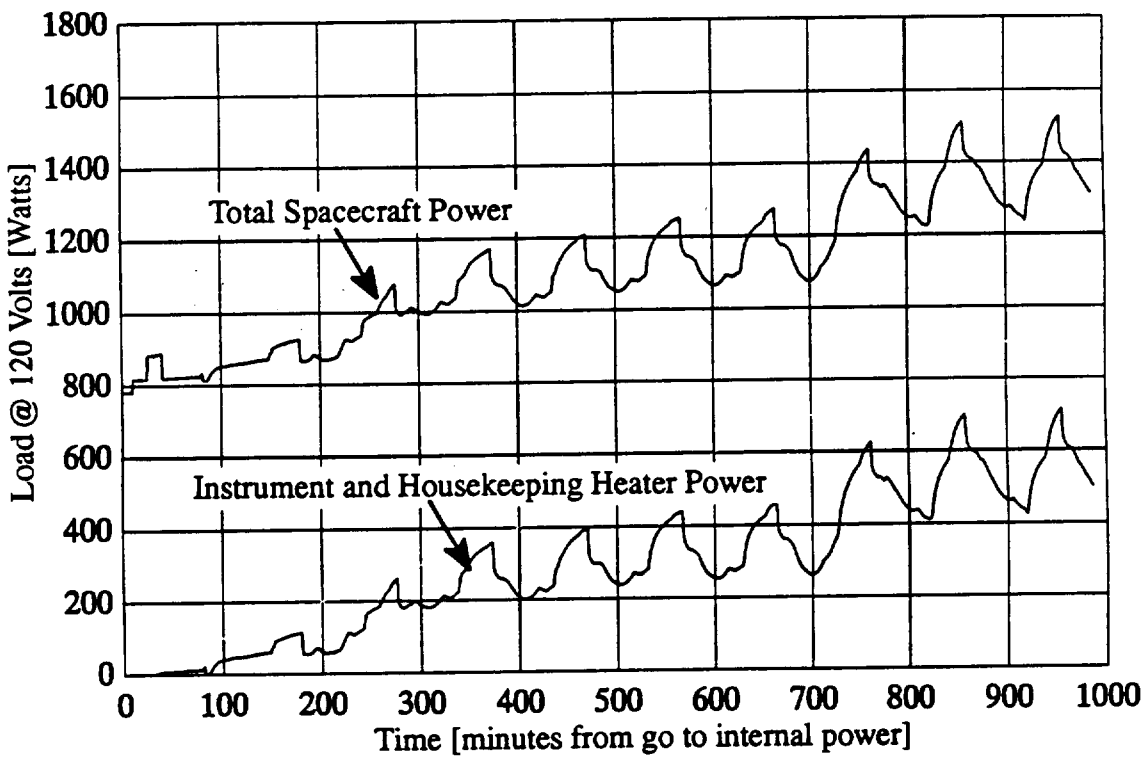

Figure 4. EOS–AM Power Profile for Case of Solar Array Deployment Failure (Beta angle = 15 degrees)

The total housekeeping power in Table II is about 136 W higher than the housekeeping power assumed for the previous energy balance analysis. Principally, this difference is due to the omission of the HGA from the profile in the previous analysis and the decision to operate the star trackers and ADE during launch. Remaining differences are due to updated component power consumptions.

3.2.2 Spacecraft Heater Power

Figure 3 shows the Spacecraft heater power requirements (for both instruments and housekeeping equipment) during launch/ascent and orbit initialization. The cyclical heater power requirement in the figure corresponds to the daytime/eclipse orbit cycle. Spacecraft heater power is very low during launch/ascent and the first orbit of the OAI phase. For the first two orbits after the Spacecraft goes to internal power, the average heater power is approximately 35 W. However, average heater power requirements continue to increase throughout the first 10 orbits, reaching a level of 544 W.

The heater power required to maintain both instrument and housekeeping equipment at survival temperatures and operating equipment at minimum operational temperatures was estimated using Spacecraft–level TRASYS and SINDA thermal models. The Spacecraft–level model incorporated thermal models of the instruments which were supplied by the Instrument Providers as well as HGA and SAA models provided by subcontractors. Based on the minimum air temperature in the LV fairing, all components were assumed to be at 5°C at the time of separation. As a worst case cold condition, the beta angle was assumed to be 15 degrees.

After separation from the LV, the non–operational components begin to cool down, approaching their minimum survival temperatures. To account for analysis uncertainties, Spacecraft heater power was estimated with heater setpoints set for turn–on at temperatures 5°C above components' minimum survival temperatures. In actual operation, heater setpoints will be set 2°C above minimum survival temperatures to assure equipment safety.

Variable conductance heat pipes are no longer used to modulate the heat transfer from equipment module radiators in the current EOS–AM Spacecraft design. Modulation is no longer a method for significantly reducing the total Spacecraft heater power consumption because of component design changes. The equipment to record Spacecraft science and housekeeping data has been changed from a tape recorder to a solid state recorder which has a more steady power profile. Without large power transients, modulation offers no significant heater power savings. Therefore, modulation of EM heat rejection is no longer considered as a parameter in the energy balance analysis.

Spacecraft heater power requirements have decreased significantly since the previous energy balance analysis, from a dynamic steady state average of 946 W (with recorder EM modulation) to an average of 614 W. There are two primary reasons for this decrease: (1) reduction of the accuracy class contingency factor from 20% to 10% due to the EOS–AM program reaching the end of the preliminary design phase, and (2) changes in equipment module layouts and equipment thermal dissipation that have allowed thermal control to be achieved with less radiator area.

Several changes in equipment module layouts and equipment thermal dissipations have led to a reduction in heater power consumption. Specific examples of these changes include the following:

- In the power EM, the battery dissipation has increased from an average of 36W to an average of 64 W, which has reduced the heater power required.

- In the Recorder EM, the equipment has been moved from the +Z panel to be mounted directly on the +Y radiator panel. Because this new layout has increased the efficiency of the thermal coupling between the equipment and the radiator, the radiator size has been reduced. Variable conductance heat pipes are no longer required to modulate the heat rejection from this EM's radiators.
- In the RWA EM, the reaction wheels have been relocated to mount all four units on the +Z panel. This change has allowed the +X and –Y radiators to be eliminated, and has reduced the average heater power of this EM.

3.2.3 Instrument Launch Power

During ascent, static loads and dynamic vibration loads are induced by the launch vehicle's acceleration and the Spacecraft structural modes. Two Instruments, MOPITT and ASTER, have requested that power be provided during launch to allow active position control of mechanisms with moving parts which are susceptible to damage if their positions cannot be controlled during launch loads. Therefore, Instrument launch power has been considered as one of the parameters of this energy balance analysis.

The Instrument Provider for MOPITT has requested 33 W of power during launch/ascent to maintain continuous motion of the chopper and the length modulation cells in order to prevent brinelling of the bearings during launch–induced vibration loads. The operational scenario proposed by the MOPITT team requires BDU commands and access to the 1553B C&T bus during the launch/ascent phase. While the Spacecraft is on the launch pad in ground test mode, the Instrument would be powered–up into its safe mode and the choppers and length modulation cells would be turned on. Commands to the Instrument would be sent as BDU relay commands, and verification of the Instrument launch configuration would be accomplished via the 1553B C&T bus. A few minutes after the Spacecraft separates from the LV, MOPITT would be transitioned to its survival mode by stored commands in order to reduce the Spacecraft power load. By this time, the vibration loads of the ascent phase have passed, and brinneling of the Instrument bearings is no longer a concern.

The SWIR component of the ASTER Instrument has requested 120 W of power during launch/ascent in order to lock the pistons of its cryocooler to prevent any damage due to launch loads. The 120 W consists of 70 W for the active position control of the cryocooler pistons and 50 W for the power supply and controller. The TIR component of ASTER also has a Stirling Cycle cooler, but TIR plans to apply a short circuit to the linear motor coils of its cooler so that no power consumption is necessary to lock the pistons during launch. However, SWIR maintains that for its cryocooler design the short circuit method is not effective against the magnitude of the static load expected during the EOS–AM launch, so that active position control is necessary.

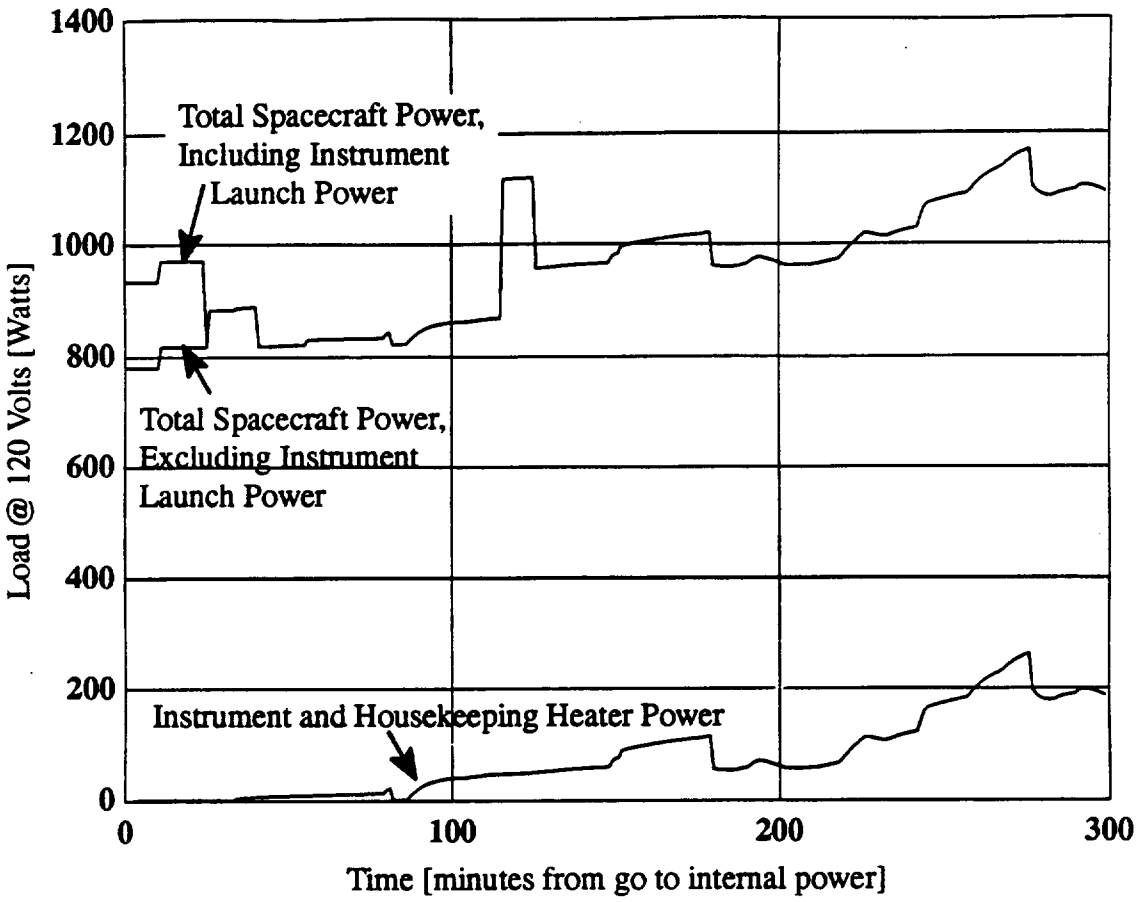

Figure 5. Comparison of EOS–AM Spacecraft Nominal Launch/Ascent Power Profile With and Without Instrument Launch Power (Beta Angle = 15 degrees)

Figure 5 shows the Spacecraft launch/ascent power profile with and without the 153 W of Instrument launch power. In order to limit the impact of Instrument launch power on the time margin to recover from an early mission energy balance failure, this analysis assumes that both MOPITT and SWIR will be transitioned back to survival mode (i.e. only heaters operational) 4 minutes following separation of the Spacecraft from the launch vehicle. By this time, it is assumed that launch loads have passed so that there is no longer a concern for damage. Following the transition to survival mode, the power profile is the same as the nominal launch/ascent profile.

One issue which must still be considered is the impact of the additional 153 W of thermal dissipation from the Instruments in the launch vehicle fairing while the Spacecraft is in ground test mode. The temperature of the batteries is a concern because the higher the charging temperature, the lower the charging capability. Martin Marietta and the LV vendors are discussing the addition of dedicated air conditioning lines to cool the batteries during pre–launch charging operations. The impact of Instrument launch power should be considered as part of the thermal analysis of the Spacecraft in the launch vehicle fairing environment which is scheduled for completion prior to the TCS CDR in May 1994.

3.3 Survival Mode Power Profile

A transient power profile was generated for the Spacecraft operating in survival mode in order to assess time margins for recovery from power subsystem failures which cause a loss of energy balance on–orbit. Table III summarizes the Spacecraft survival mode power profile, excluding heater power consumption.

Figure 6 shows the Spacecraft heater power for the first 10 orbits after the Spacecraft enters survival mode from the beginning–of–life (i.e., worst case cold) Science mode. The cyclical heater power profile in the figure corresponds to the daytime/eclipse orbit cycle. In order to have a conservative estimate of survival mode heater power, the Spacecraft was assumed to transition to survival mode from beginning of life (BOL) Science mode and the beta angle was assumed to be 15 degrees. At BOL, all initial temperature conditions would be worst case cold, so that the heater power in this profile represents the maximum survival heater power consumption of the Instruments and housekeeping equipment.

Survival heater power consumption has decreased almost 35% since the initial release of this energy balance analysis, from a dynamic steady state average of 946 W to an average of 614 W. As explained in Section 3.2.2, this decrease is due primarily to changes in equipment module layouts and reductions in equipment thermal dissipation that have allowed thermal control to be achieved with less radiator area.

Figure 6 is the profile of total Spacecraft survival mode power consumption during the first 10 orbits after entering survival mode from BOL science mode. This total Spacecraft survival mode power includes both the housekeeping power summarized in Table III as well as the Instrument and housekeeping heater power shown in Figure 6. The average BOL survival power consumption at dynamic steady state is 1400 W.

3.4 Nominal Launch/Ascent Energy Balance

Battery charging temperature is one parameter considered in assessing the Spacecraft's ability to attain energy balance on–orbit. The batteries will be maintained at a state of full charge while in the LV fairing prior to launch by continuous trickle charging, and the temperature at which this pre–launch charging operation is performed affects the battery charge capacity. Charging at 20°C results in a capacity of 50 ampere–hours per battery (the nameplate capacity), but increasing the charging temperature to 30°C decreases the capacity to 42 ampere–hours. Based on existing LV fairing cooling capabilities, the batteries are estimated to be at about 30°C during pre–launch charging. However, Martin Marietta is exploring the possibility for bypass ducts in the fairing to blow coolant directly on the battery panels in order to attain a lower battery–charging temperature, and the interface control document for the LV specifies a maximum temperature of 20°C for the battery panels. This analysis considers both 20°C and 30°C battery pre–launch charging temperatures.

In the nominal launch/ascent scenario, the Spacecraft will begin to attain energy balance at G + 82 minutes. This is the nominal sun tracking time, at the exit from the first eclipse, when the solar array will begin generating power. For this nominal case, the battery DOD at the start of energy balance

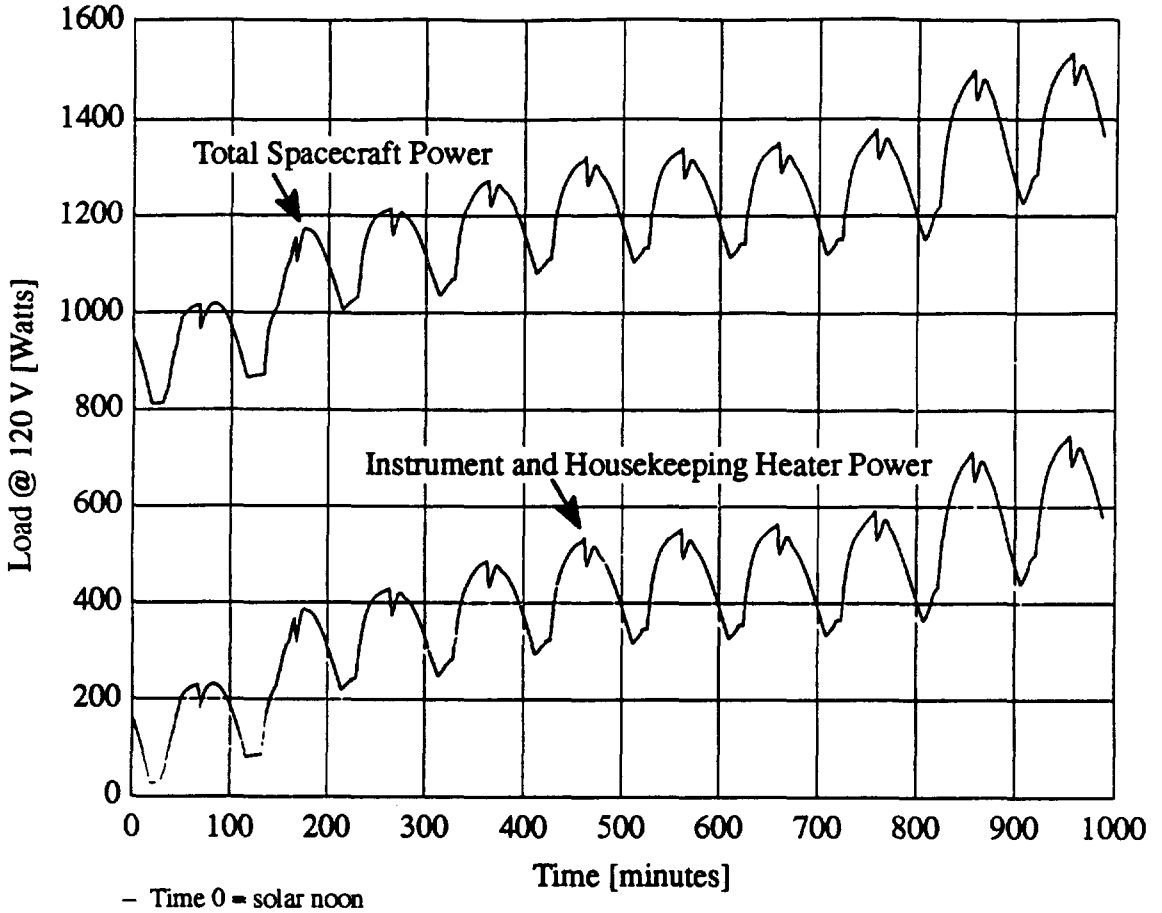

– Time 0 = solar noon
– Initial Condition: BOL Science Mode temperatures
– Beta angle = 15 degrees

Figure 6. EOS–AM Spacecraft Survival Mode Power Profile

is estimated to be 18.2% for a battery charging temperature of 20°C, or 21.8% for a battery charging temperature of 30°C. Figure 7 shows the profile of battery depth of discharge from the moment of go to internal power until the batteries are fully recharged on–orbit after exiting the first eclipse.

If ASTER and MOPITT are allowed to consume 153 W of power during launch to protect equipment during exposure to launch loads, the battery DOD at the exit from the first eclipse is estimated to be 23.0% for a battery charging temperature of 30°C. Figure 7 shows the profile of battery depth of discharge for the power profiles with and without Instrument launch power. As shown by the figure, Instrument launch power makes only a very small difference to the maximum DOD attained before nominal sun tracking, at the end of the first eclipse.

In all of the nominal launch/ascent scenarios considered, the maximum battery DOD reached before the solar array begins generating power on–orbit is well below the the 30% operational DOD allowed for the EOS Spacecraft.

Table III. EOS–AM Spacecraft Survival Mode Power Profile, Excluding Heater Power

SUBSYSTEM	COMPONENT	SURVIVAL POWER [W]
EAS		3.0
TCS	HCEs	73.0
	CPHTS HCEs	13.2
GN&C	MTRs	5.0
	RWAs	63.0
	ESA	21.0
	FSS	2.8
	SSSTs	0.0
	TAMs	1.9
	IRU	28.0
	ACE	48.3
EPS	BPC	36.0
	Battery Panel	6.6
	Hex Battery Panel	6.6
	PDU	38.4
	FDBs	1.1
	Propulsion EPC	0.0
	S/A Assembly DEU	0.0
	S/A Ass'y Mast Motor	0.0
	ADE	9.2
	SAD	0.0
	SSU	43.8
	PSU	15.5
C&DH	SCC	17.0
	CTIU	62.2
	BDUs - H/K	55.2
	BDUs - Instr	32.4
	SSR	27.0
	SFE	0.0
COMM	S-band Transponder	76.0
	SBIU	0.0
	BRF	0.0
	KSA Modulator	0.0
	MO	17.6
	HGA	50.0
	HGA release mech.	0.0
	DAS	0.0
PROP	PMEA	0.0
	Pressure Transducer	0.6
	1 lb thrusters	0.0
	5 lb thrusters	0.0
	Cat Bed Heaters	0.0
Total Survival Power (Excluding Heaters):		754.4

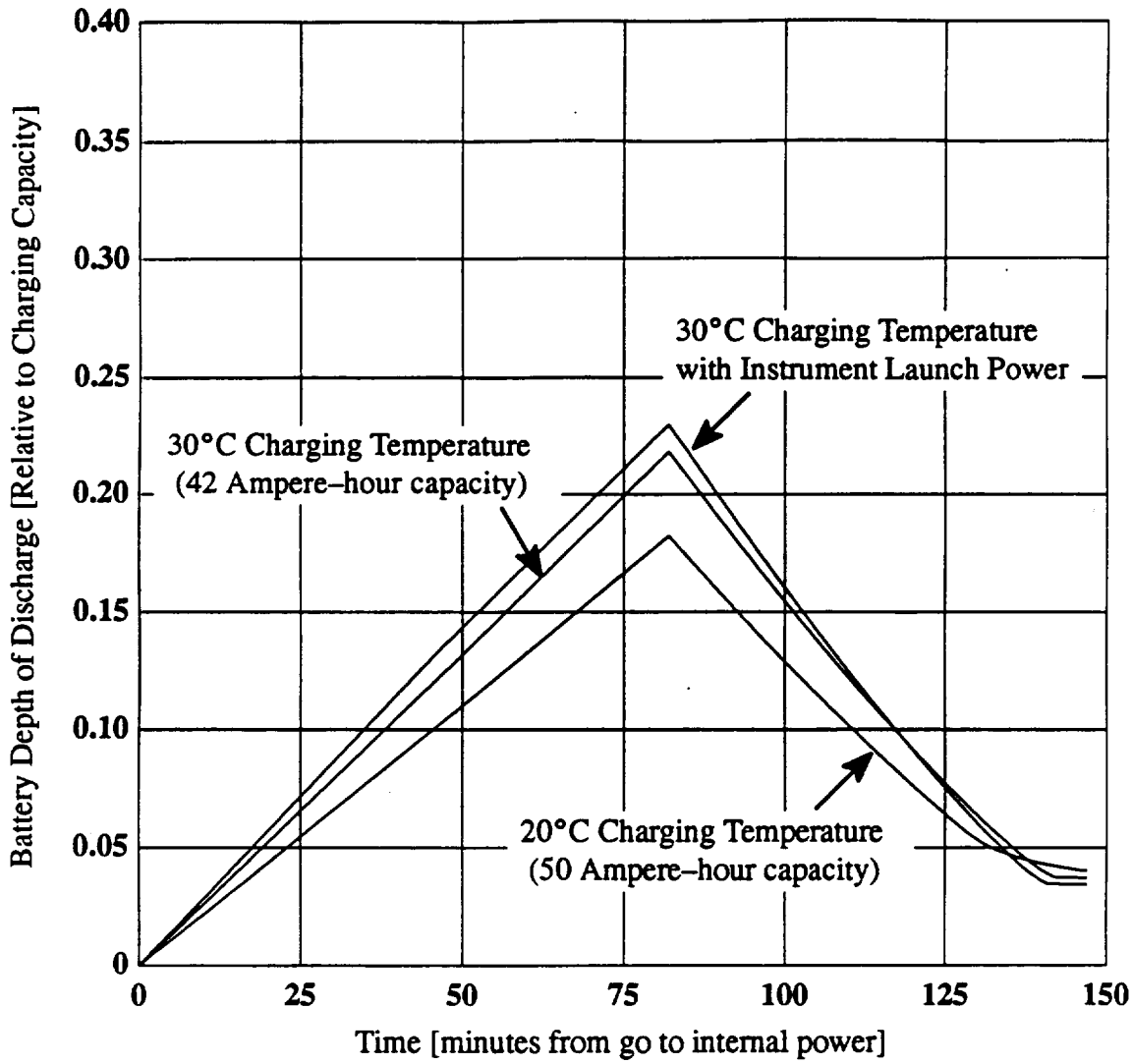

Figure 7. EOS–AM Battery Depth of Discharge (DOD) Profile During Nominal Launch/Ascent. Comparison of 20°C and 30°C Battery Charging Temperature Cases. Comparison of Cases With and Without Instrument Launch Power.

4 TIME MARGINS FOR RECOVERY FROM ENERGY BALANCE FAILURES

The attainment and maintenance of Spacecraft energy balance is critical to the success of the EOS mission. Any operating period in which power output from the solar array does not meet operational and battery recharging loads becomes a power–critical situation.

Although improbable, a mechanical failure of the solar array drive is considered more likely than an electronics failure to cause a power–critical situation on–orbit. Individual electronic failures tend to have minimal impacts to power generation capability. For example, there are 24 circuits of solar cells on the array, so that loss of any one circuit or failure of any one shunt switch reduces power output by only about 4%. The solar array is designed to meet full power load requirements at EOL after losing 11 strings to random failures, so that even multiple failures of this type could be withstood. However, a mechanical failure in the deployment or drive of the solar array could significantly reduce the Spacecraft's ability to generate power.

Three scenarios which lack Spacecraft energy balance were defined for this study: (1) a failure in the deployment of the solar array during the launch/ascent sequence, (2) a complete failure of power generation on–orbit, and (3) an on–orbit failure of the solar array sun–tracking capability. These cases do not comprise the gamut of all possible power–critical scenarios, but they are intended to represent the type of time margin which is available to recover from a loss of energy balance. The second case provides a worst case (i.e. lower bound) on the time margin to recover from a power critical condition on–orbit. The third case represents the most power that can be generated by a stationary solar array, so that this case provides an estimate of the upper bound on the time margin to recover from power critical conditions caused by SAD failures.

Time margins have been estimated that represent the time available for recovery operations in the event that Spacecraft energy balance is lost. The solar array deployment time margin is the time available to recover from an array deployment failure. This margin is defined as the time from nominal sun tracking (82 minutes after go to internal power) until the batteries reach maximum allowable depth of discharge (80% DOD). For on–orbit power failure scenarios, the time margin for recovery is defined as the time from failure occurrence until the batteries reach 80% DOD.

The operational DOD limit for the batteries is 30% under nominal conditions, and 35% with a single cell failure. Based on Martin Marietta's experience with geosynchronous satellites which routinely discharge NiH batteries to high levels of DOD, it is considered that a one time discharge of the EOS–AM batteries to 80% DOD will not adversely affect battery lifetime or performance. Cell voltage at 80% DOD, at approximately 69V for 54 cells, will not degrade the efficiency of the Battery Power Conditioner (BPC), which can operate nominally down to 50V. Therefore, the time margins will be estimated assuming a one–time maximum DOD of 80%.

Generally, DOD is calculated as a percentage of the nameplate capacity (50 ampere–hours) of the battery. However, for the solar array deployment time margin, DOD is calculated as the percentage of the charging capacity of the battery, which is dependent on the pre–launch charging temperature (20°C or 30°C). A battery charged at 20°C has a capacity of 50 ampere–hours, so that 80% DOD means 40 ampere–hours discharged. A battery charged at 30°C has a specified capacity of 42 ampere–hours, so that 80% DOD means 33.6 ampere–hours discharged.

5 SOLAR ARRAY DEPLOYMENT TIME MARGIN

The solar array deployment time margin is the time available to recover from an array deployment failure. This margin is defined as the time from nominal sun tracking (G + 82 minutes) until the batteries reach the maximum allowable DOD. Based on required equipment operational and heater power during the early mission phases, battery DOD was calculated as a function of time assuming that the solar array did not deploy.

Figure 8 shows the battery depth of discharge as a function of time for the EOS Spacecraft power profile with and without Instrument launch power and for battery charging temperatures of 20°C and 30°C. The DOD profiles in the figure assume that recovery from the deployment failure occurs in time for the battery DOD to not exceed 80%. In each case, the time margin for recovery from a solar array deployment failure is measured from the nominal sun tracking time, G + 82 minutes, and is calculated as a percentage of the charging capacity of the battery for the particular battery pre–launch charging temperature.

- The greatest time margin for recovery from a solar array deployment failure is 238 minutes (2.4 orbits) for the case of a 20°C battery charging temperature and no Instrument launch power.
- The effect of increasing the battery charging temperature to 30°C is to decrease the time margin by 80 minutes, to 158 minutes (1.6 orbits). The battery DOD has not quite reached 80% at 158 minutes past nominal sun tracking, but this time limit for recovery was selected because it is the time by which recovery must occur if the battery DOD is not to exceed 80% during the following eclipse. Neglecting the timing of the eclipse, the decreased battery charge capacity at 30°C would reduce the time margin by 44 minutes.
- Providing 153 W of Instrument launch power reduces the time margin by about 1 minute, to 157 minutes (1.6 orbits) for the 30°C charging temperature case.

Figure 8 also shows that, in all of these cases, the batteries require about two orbits to fully recharge following recovery, assuming that the Spacecraft remains at a survival mode power level.

The time margin for the 20°C case is almost identical to the 237 minutes time margin estimated in the previous energy balance analysis. The 44 minute reduction in the time margin due to a 30°C battery charging temperature (neglecting the effect of eclipse timing) is very similar to the 47 minute delta estimated in the previous analysis.

Since the FOT will have a nearly continuous communication link with the Spacecraft during the launch/ascent phase, a time margin of at least 1.6 orbits is considered adequate for problem identification and recovery actions. The time margin is measured from the nominal sun tracking time of G + 82 minutes. Actually, the time margin may be as much as 60 minutes longer because any problems with the solar array deployment should become evident soon after the commencement of deployment at G + 22 minutes.

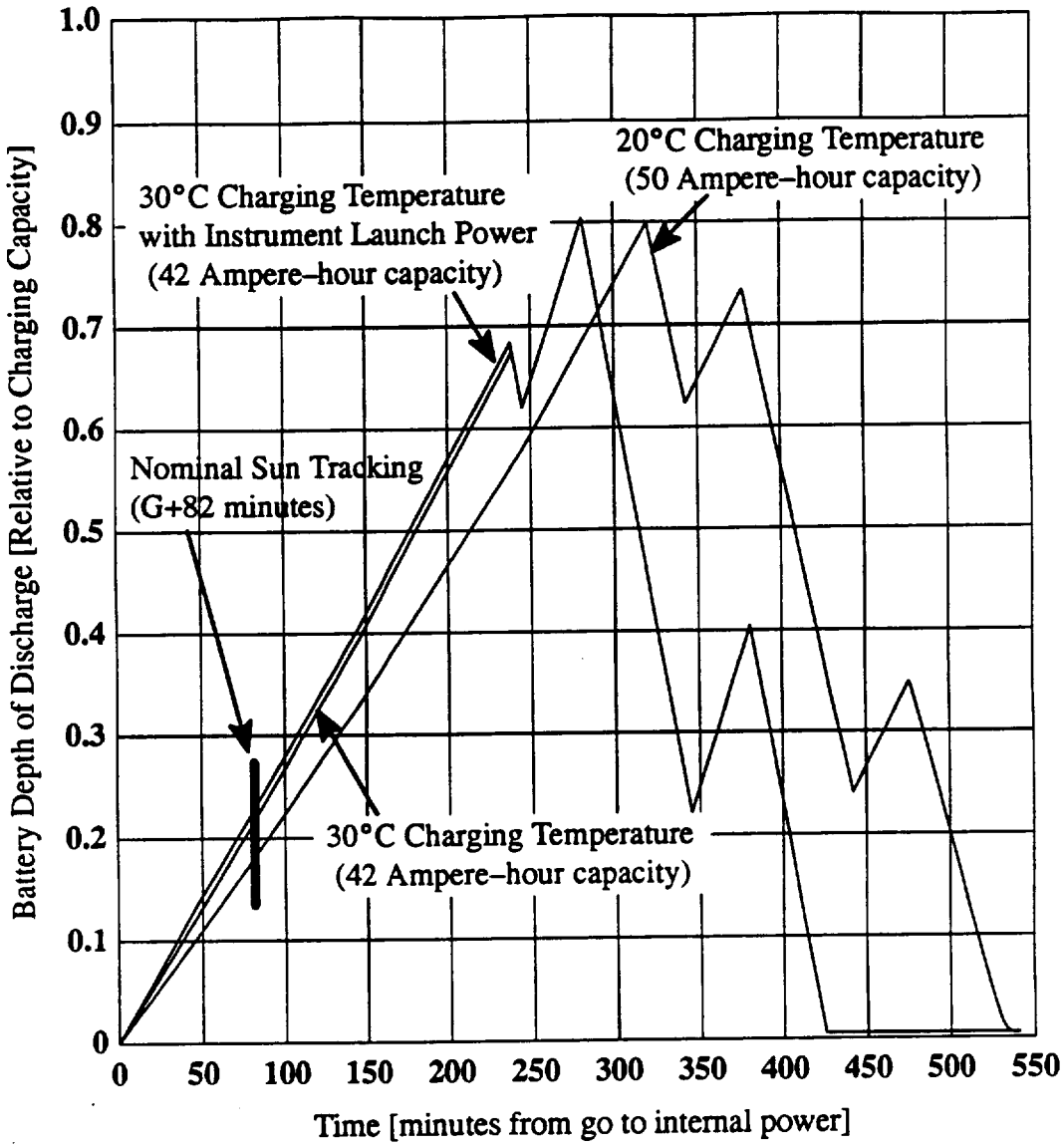

Figure 8. EOS–AM Battery Depth of Discharge (DOD) Profile For the Case of a Solar Array Deployment Failure. Comparison of Cases with 20°C and 30°C Battery Charging Temperature. Comparison of Cases With and Without Instrument Launch Power.

5.1 Assessment of the Adequacy of the Solar Array Deployment Time Margin

In order to assess the adequacy of the calculated time margin for solar array deployment, a strawman recovery strategy has been developed for deployment failures. This will also provide a starting point for the detailed recovery procedures that will be developed prior to launch, in order to provide the capability of recovering from a deployment failure in the least possible time.

5.1.1 Solar Array Deployment Sequence

Deployment of the solar array will be initiated concurrently with earth acquisition. Deployment is achieved in two phases. First, pyro–activated cable cutters release the blanket box from the Spacecraft. The spring–driven elevation hinge then deploys the cannister and blanket box from the launch position to the operational position, and automatically latches at end–of–travel. Once the elevation hinge is latched, the Deployment Electronics Unit (DEU) commands an electrically redundant motor to release the cable latches that secure the lid and bottom of the blanket box assembly during launch. Two mechanically redundant brushless DC motors power the rotating drum mechanism that deploys the continuous coilable longeron mast, which is driven out of the cannister until it reaches its final position. End of deployment motor halt is controlled by limit switches with a hard stop backup to ensure that the motor does not drive beyond the end of deployment limit.

The following telemetry points are available to indicate the status of the deployment:

c. Angular position of elevation hinge

d. Elevation hinge latch – yes/no

e. Blanket box top separation – yes/no

f. Rate of boom extension (from which boom position can be determined)

g. Boom deployment completion – yes/no

The DEU electronics are fully redundant, but are not cross–strapped so that any failure requires switching to the redundant DEU board. Switching is accomplished in the Sequential Shunt Unit (SSU) via ground command. Failures will be indicated by telemetry and immediately addressed by the flight operations team on the ground. Nearly continuous TDRSS contact via the omni antennas is the assumed communication path during this phase of the mission.

5.1.2 Possible Failures and Recovery Actions

The functional path diagram for solar array deployment is shown in Figure 9. Recovery actions for deployment anomalies fall into two categories: those for first–stage deployment and those associated with blanket deployment. These will be discussed separately below. Only failure modes for which recovery actions are possible will be discussed. For example, no recovery is possible in the event of a double failure of the cable–cutters which release the blanket box, so this failure mode is not relevant to the time margin analysis.

5.1.2.1 First–stage Deployment

Critical failure modes in the first–stage deployment are binding–type modes of the hinge shaft bearings and damper. There are two modes in this category which would result in failure to deploy or partial deployment. Damper binding can be caused by seized bearings or a jammed vane. Seized hinge–shaft bearings can be caused by contamination of the bearings or mechanical failure. In order

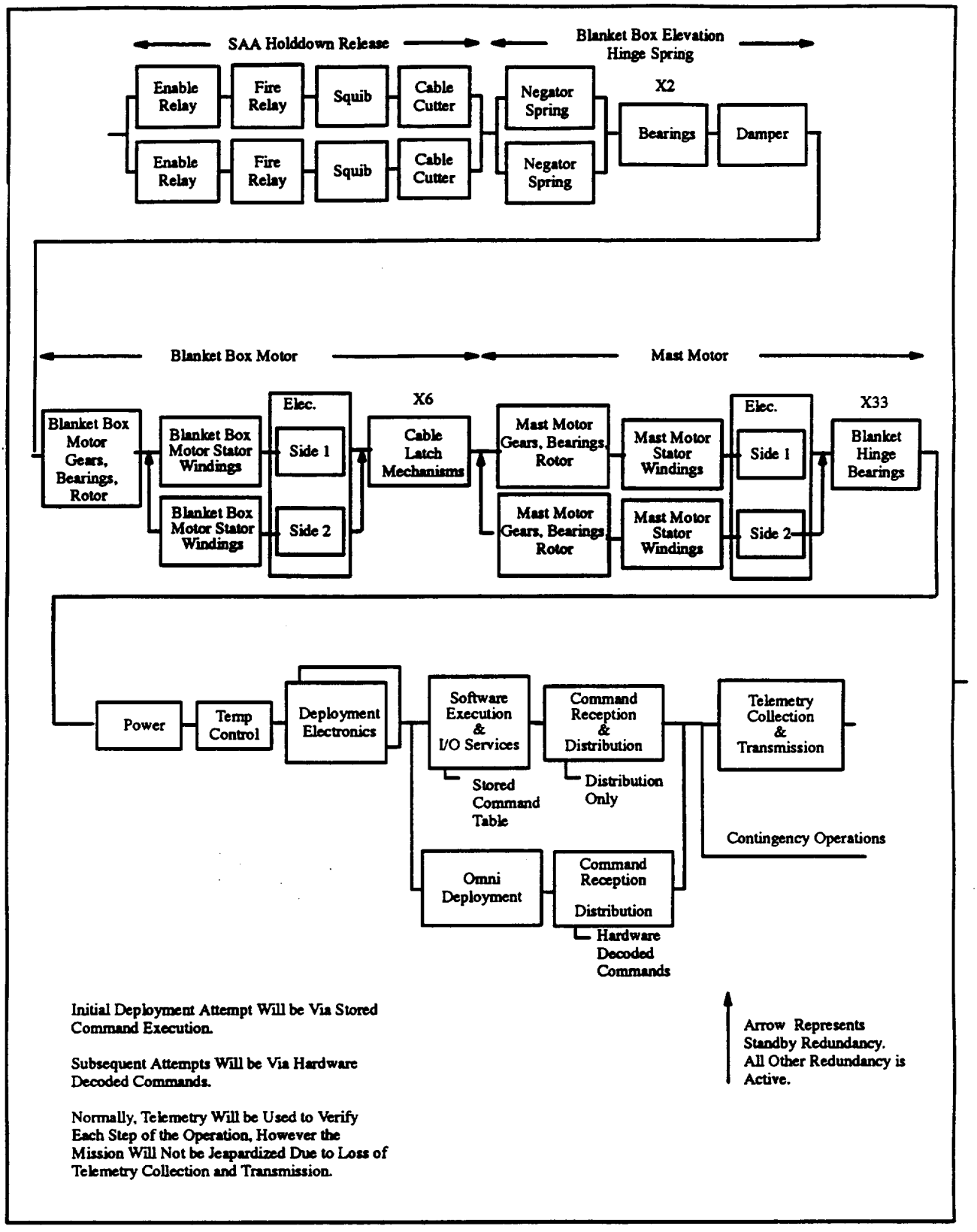

Figure 9. Solar Array Deployment Functional Path Diagram

to minimize the possibility of these failures, all bearing surfaces are finished with a dry lube coating to prevent galling. In addition, the FMEA recommends that a prelaunch inspection be performed to verify that the hinge trigger has not been tripped inadvertently by prelaunch activities. In the event of either of these failures, thruster maneuvers would be performed to try to free the hinge by impulse.

Extreme low temperature beyond that predicted could also inhibit array deployment. In this case, the ACS thrusters could be used to point the hinge directly at the sun for maximum heating. If this alone was not effective in freeing the hinge, a combination of sun–pointing and thrust maneuvers would be attempted. As a last resort, depending on the stuck position of the hinge, the blanket could be deployed before the hinge is latched, using the blanket's moment of inertia to try to force the hinge to a latched position.

5.1.2.2 Blanket Deployment

The only identified failure mode resulting in stopped blanket deployment is jamming of the truss boom. (A multiple failure of the redundant motor windings would also prevent deployment, but this failure would be non–recoverable.) Jamming, or increased resistance of the drum nut mechanism, could be caused by mechanical failures such as separation, yielding, loss of memory of the fiberglass mast, galling, or lack of lubrication. Contamination and temperatures that are too cold could also increase the resistance to deployment. These concerns are mitigated through material selection and inspection, specified time limits to mast stowed storage, and dry lube coating on all bearing surfaces. In addition, a three–to–one (200%) torque margin exists in the drive motor, which should be adequate to overcome a jam. If not, recovery could be attempted by the following methods:

a. Stopping and restarting the motor

b. Reversing the motor for a short distance, then resuming deployment

c. Reversing the motor for increasing distances and resuming deployment

d. Rotating the solar array drive

e. Rotating the Spacecraft to increase the sun angle on the cannister, then resuming deployment

If blanket deployment failure occurred after deployment was almost completed, a limited amount of power would still be generated by the array, providing survival power and increasing the time available for recovery operations.

5.1.2.3 Sun Tracking

Because of LV fairing constraints, the solar array is stowed on the Spacecraft such that it deploys with the solar cells facing toward the earth. The array must be rotated more than 90 degrees in order to align the cell–side normal with the solar vector for the commencement of sun tracking. A failure of the solar array drive (SAD) mechanism could delay this rotation, causing a power–critical condition. The deployed solar array can generate a limited amount of power while the cells face the earth because of albedo illumination of the cells. At beginning of life with the deployed solar array

stationary in a nadir–pointing orientation, the average power output during the 65 minutes when the Spacecraft in in sunlight is approximately 1065 W at 127 Volts. The time margin to recover from a failure of the SAD which leaves the solar array in this nadir pointing orientation is about 4.8 orbits.

One SAD failure mode is galling of the drive bearings which could be caused by lack of lubrication or by temperatures that are too cold. These concerns are mitigated through material selection and dry lube coating on all bearing surfaces. In addition, a three–to–one (200%) torque margin exists in the SAD motor, which should be adequate to overcome additional resistance. If not, recovery could be attempted by the following methods:

a. Stopping and restarting the motor

b. Reversing the direction of rotation

c. Rotating the Spacecraft to increase the sun angle on the SAD

5.1.3 Time Required for Recovery

In the case of elevation hinge failure, it is expected that the thruster–firing and sun–pointing recovery actions could be performed well within the established time margin of about 2.6 to 5 hours.

For blanket deployment failure, the options for recovery are limited to switching on and off the boom drive motor and SAD, and a slight rotation of the Spacecraft to improve the sun angle on the cannister. These actions could also be performed well within the established time margin.

For a SAD failure which prevents the commencement of sun tracking, recovery actions could be performed will within the approximately 4.8 orbit time margin.

5.2 Decreasing Risk Associated With Deployment

In order to identify failure modes with potentially catastrophic and critical consequences to the Spacecraft, a Failure Modes and Effect Analysis (FMEA) and Critical Items List was performed prior to the SAA PDR (Reference 2). This analysis will be updated as the design progresses.

A pro–active approach to minimizing the risk of solar array deployment failure should be taken, as follows:

a. Conduct literature search of on–orbit appendage deployment failures, and address applicability of each failure mode found to EOS solar array

b. Develop a risk mitigation plan for solar array deployment that includes modes identified in the FMEA, literature search, and any other possible causes of deployment malfunction not associated with specific component failures

c. Establish a detailed recovery plan for solar array deployment anomalies, and run simulations prior to launch

A separate risk mitigation plan, in addition to the overall Spacecraft Risk Management Plan, should be generated for the solar array deployment system, incorporating all of the above elements. While the Spacecraft plan addresses development risks that could lead to schedule delays, a separate, specific plan for the solar array deployment is justified because of the time– and mission–criticality of the event.

5.3 Options for Further Increasing Time Margin

This effort has identified options for maximizing the array deployment time margin within the constraints of the baseline EOS–AM Spacecraft design. To substantially increase the time margin established above, modifications to the Spacecraft configuration would have to be made, such as:

- *Adding a single–use, chemical battery.* This would require configuration trades to provide a physical location, heat rejection capability, and interfaces to the EPS.
- *Adding a body–mounted solar panel.* A limited amount of mounting area could be made available for body–mounted solar cells, which could provide some power generation capability during launch/ascent and in the case of an array failure. However, the available cell–mounting area is not expected to provide a significant margin increase, and would require a significant reconfiguration of the Spacecraft.

Because the current estimate of time margin for recovery from a solar array deployment failure is considered adequate for recovery operations, these options are not being pursued further at this time.

6 WORST–CASE POWER GENERATION FAILURE

The absolute worst case power failure scenario would be one in which the solar array stops all power generation. Although no credible failure scenario is known which would lead to this situation, it was considered in order to determine how long the Spacecraft could survive on batteries in the event that a non–permanent failure on–orbit leads to loss of power generation capability. For example, this situation could occur if the coarse sun sensors indicated that the array was in a position 180° out of phase with its actual position, causing the array to face away from the sun.

This failure scenario is defined by the following assumptions:

- The solar array generates no power.
- The initial condition on the batteries is a DOD of 40%, which is the level of discharge at which the FDIR system will autonomously direct the shedding of nonessential housekeeping and Instrument loads.
- The battery capacity is 50 ampere–hours, the nameplate capacity. (The actual battery charging capacity at the 10°C maximum operational temperature is 57 ampere–hours.)
- The Spacecraft power profile is the one shown in Figure 6, for the Spacecraft entering survival mode from a beginning of life (BOL) science mode. The heater power in this case is worst case because: (1) housekeeping and Instrument components are coldest during the BOL part of the mission, so that survival heater power requirements increase quickly after entrance to survival mode; and (2) the 15 degree beta angle requires the greatest survival heater powers.

For this scenario, the time to reach 80% DOD was estimated as approximately 149 minutes, or 1.5 orbits, after the batteries reach a 40% DOD. The battery DOD profile for this case is shown in Figure 10. Based on a non–credible, worst–case energy balance failure scenario, this time margin represents a lower bound for the length of time the Spacecraft can survive solely on battery power after entrance to survival mode.

The time margin of 149 minutes is 36 minutes less than the 185 minutes which was estimated for this worst case power failure in the previous energy balance analysis. The primary reason that the current value is shorter is that the previous analysis assumed that the Spacecraft transitioned to survival mode at a lower DOD of 35% because the FDIR criteria had not yet been defined. The 40% DOD criteria has been selected because this is the highest state of discharge from which the batteries could be fully recharged within one orbit's sun period. Also, this DOD value is somewhat greater than 35%, which is the specified maximum allowable DOD for the case of one battery cell failure. There are no constraints which would preclude changing this FDIR criteria to shed load at a slightly lower DOD (i.e. closer to 35%) in order to increase the time margin.

This failure scenario combines many worst–case assumptions, and the actual time margin is expected to be substantially longer than 1.5 orbits because it is likely that the FOT would detect the problem of increasing DOD and shed loads via ground command before a level of 40% is reached.

Even if the FOT does not detect the power critical condition prior to autonomous load shed, 1.5 orbits is considered adequate time margin for recovery actions to be completed. The EOS–AM Spacecraft is baselined to have two 10 minute TDRSS contacts each orbit for transmission of science data and housekeeping telemetry. Normally, the longest lapse between failure occurrence and the reception of telemetry indicating the problem would be about 40 minutes. (This analysis does not consider simultaneous power failures and loss of TDRS contact.) Even in this case of a long delay between problem occurrence and problem notification, there would still be slightly more than one full orbit of time margin remaining to identify the problem and command any recovery actions. Possible methods for increasing this time margin include:

a. verifying that all non–essential loads are shed during survival mode;

b. optimizing radiator sizing through trim blankets to reduce heater power, and

c. re–evaluating the FDIR criterion for autonomous load shed to make it less than 40% battery DOD so that non–essential loads are shed sooner after any failure.

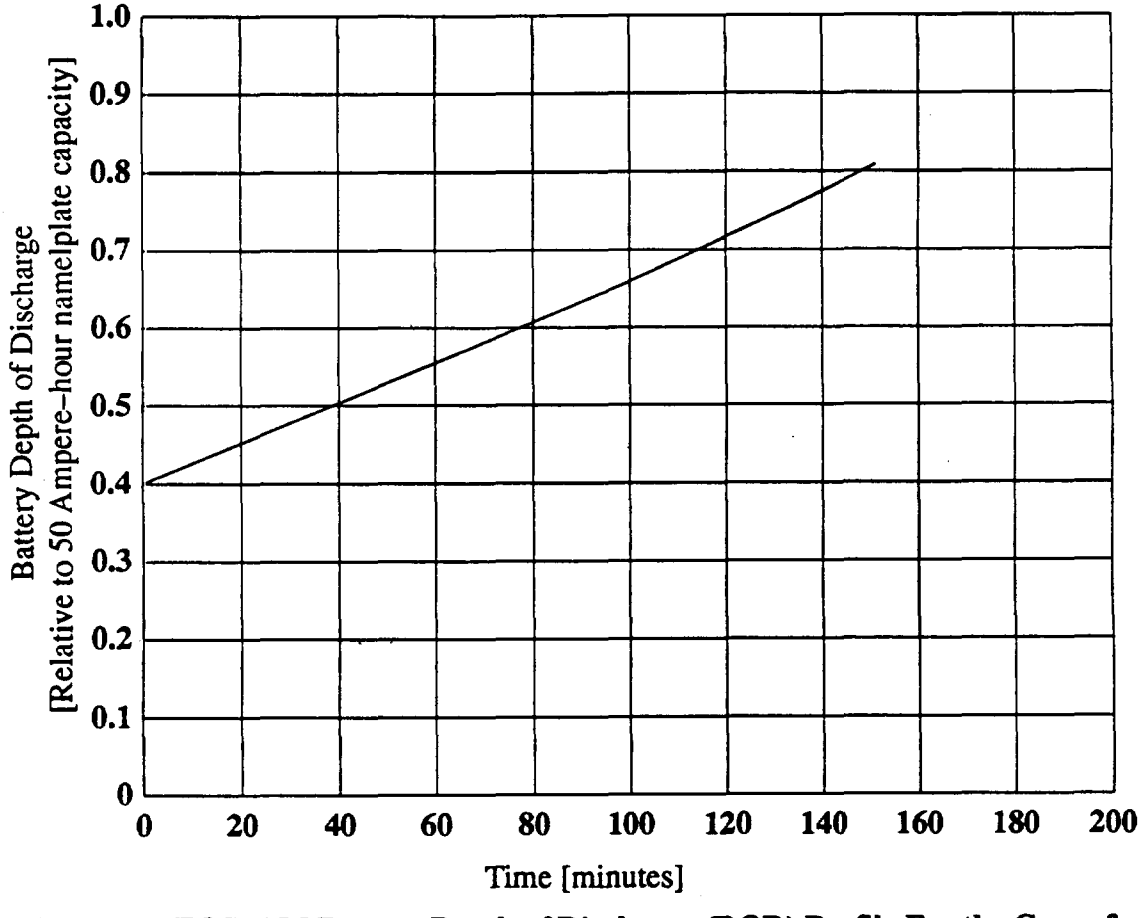

Figure 10. EOS–AM Battery Depth of Discharge (DOD) Profile For the Case of a Worst Case Power Generation Failure.

7 SOLAR ARRAY TRACKING FAILURE

Another energy balance failure was considered in which a SAD failure causes the the solar array to lose the capability of tracking the sun. A scenario was considered in which the cell–side normal of the array points toward zenith, because this orientation allows the greatest power generation of a stationary array. Therefore, this scenario provides an estimate of the upper bound of the time margin to recover from a power critical situation caused by a SAD failure. (Section 5.1.2.3 provides an estimate of the lower bound of the time margin to recover from a solar array tracking failure. The solar array oriented with the cell side facing nadir is the case in which the stationary array generates the least amount of power.)

This failure scenario is defined by the following assumptions:

- The Spacecraft maintains an earth–oriented attitude.
- The solar array is stationary in a solar noon position, so that it does not track the sun. The array position is one in which the plane of the solar cells is parallel to the Spacecraft X axis with the cells facing toward zenith (–Z). This configuration is shown in Figure 12.
- The conditions assumed for power generation include:
  (1) mid–term (2.5 years) solar cell properties
  (2) worst case (lowest) solar constant, which implies conditions from day 225 of the orbit with beta angle equal 23.9°.
  (3) a constant solar array temperature of 71°C (The blanket has a very small thermal capacitance, so that maximum temperature is achieved soon after exit from eclipse. Variations in blanket temperature are small during the daytime period.)
- At the time of the failure, the batteries are at a DOD of 22%, which is the estimated level of battery discharge at exit from eclipse during nominal Science Mode. The transition to survival mode is considered to occur when the Spacecraft exits eclipse.
- The battery capacity is 50 ampere–hours, the nameplate capacity. (The actual battery charging capacity at the 10°C maximum operational temperature is 57 ampere–hours.)
- Normal EPS operating efficiencies were assumed, including 98% harness efficiency, 94% battery discharge efficiency, 93% battery charge efficiency, and 1.06 charge/discharge (C/D) ratio.
- The Spacecraft power consumption remains at science mode levels until the battery DOD reaches 40%, when the Spacecraft autonomously sheds load to a survival mode level. Once load shed occurs, the Spacecraft power profile is the one shown in Figure 6. BOL conditions and a 15 degree beta angle were assumed for worst case heater power values.

During nominal operations, the solar array always tracks to within a few degrees of normal to the solar vector. However, the solar array is capable of generating reduced levels of power for a wide range of sun angles up to about 70° from normal. In the scenario of no sun tracking, the array stuck

with the cell–side normal pointing toward zenith receives some sunlight during a 50 minute period each orbit, as compared with 65 minutes during nominal conditions. The angle of the sun on the solar array varies during the daytime portion of the orbit, so that nominal levels of power output are achieved for only about 12 minutes of each orbit. In this failure scenario, the average power output from the array is 3295 W during the 50 minutes of sun time. The calculations of the power output of the solar array for this failure scenario are included as an attachment in Appendix A.

For this scenario in which the solar array does not track the sun, the Spacecraft is capable of maintaining energy balance with a 1393 W average Spacecraft load. At dynamic steady state, the Spacecraft survival power is about 1400 W (see Figure 6). Since the average Spacecraft survival power requirement at dynamic steady state is greater than the sustainable load, this scenario could not sustain survival operations indefinitely. However, with additional scrubbing of the power required by the Spacecraft in survival mode, it would be possible to survive indefinitely with this particular orientation of stationary solar array.

Figure 11 illustrates the battery DOD profile for this power critical scenario. Initially, the Spacecraft is in science mode and remains at that level of power consumption until the battery DOD reaches 40%. When the battery DOD reaches the threshold level, the Spacecraft autonomously sheds load to transition to survival mode with a reduced power load. The maximum battery DOD reached immediately following load shed is about 47%. Once load is shed, the batteries are able to recharge partially while the Spacecraft power load is small, before heater power consumption ramps up to its steady state value. As the heater power consumption increases, the batteries become unable to fully recharge each orbit, and the maximum battery DOD increases about 3% per orbit. At this rate, the batteries slowly approach the maximum allowable DOD of 80% over more than 24 orbits. Therefore the time margin to recover from a loss of sun tracking capability would be approximately 40.5 hours, or 24.6 orbits, when the solar array becomes stuck with the cells facing zenith.

A time margin of 24.6 orbits is considered more than adequate for attempting all possible recovery actions. The current estimate of the time margin for recovery from a solar array tracking failure is less than the 55 orbits estimated by the previous analysis. The primary differences which have caused the time margin to shrink are that (a) the solar array EOL power output has been reduced by 18% because of the reduced array size, and (b) load shed to survival mode power levels occurs at 40% rather than at 25%.

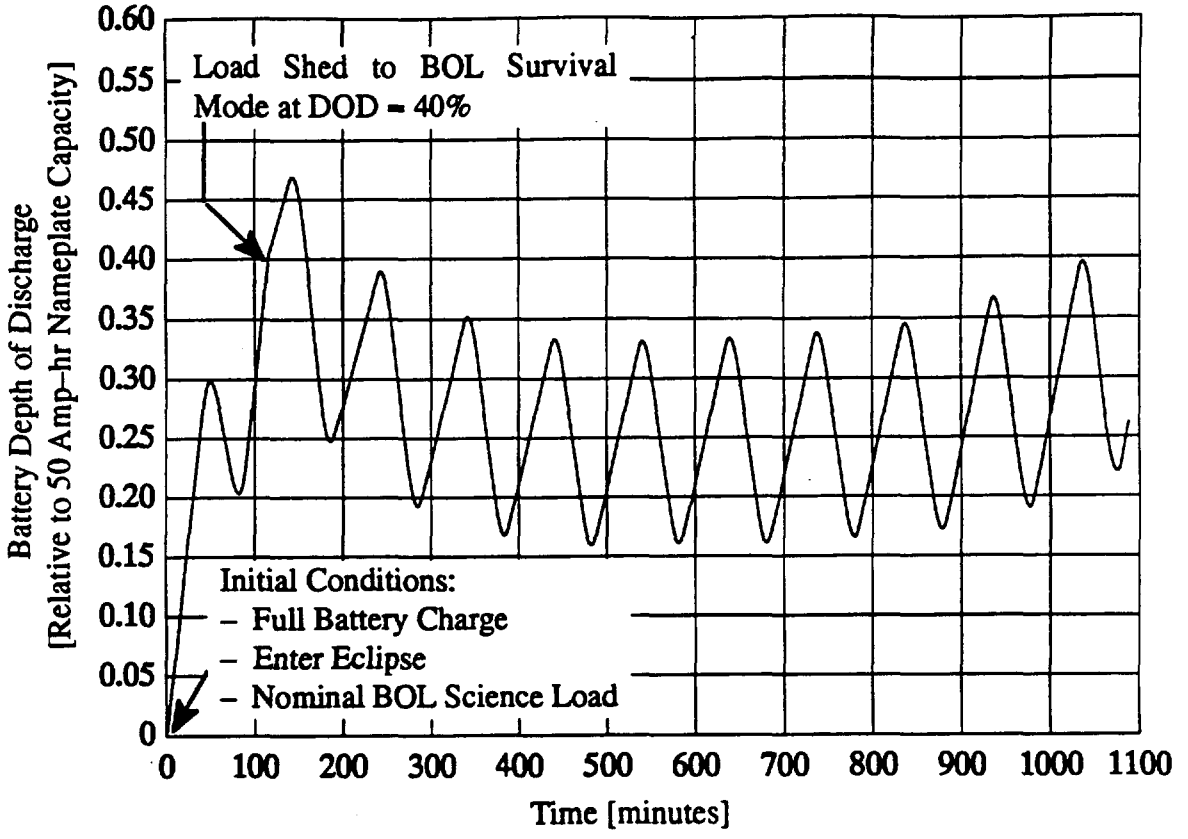

Figure 11. EOS–AM Battery Depth of Discharge (DOD) Profile For the Case of a Solar Array Tracking Failure. Case of cell–side array normal pointing toward zenith (–Z).

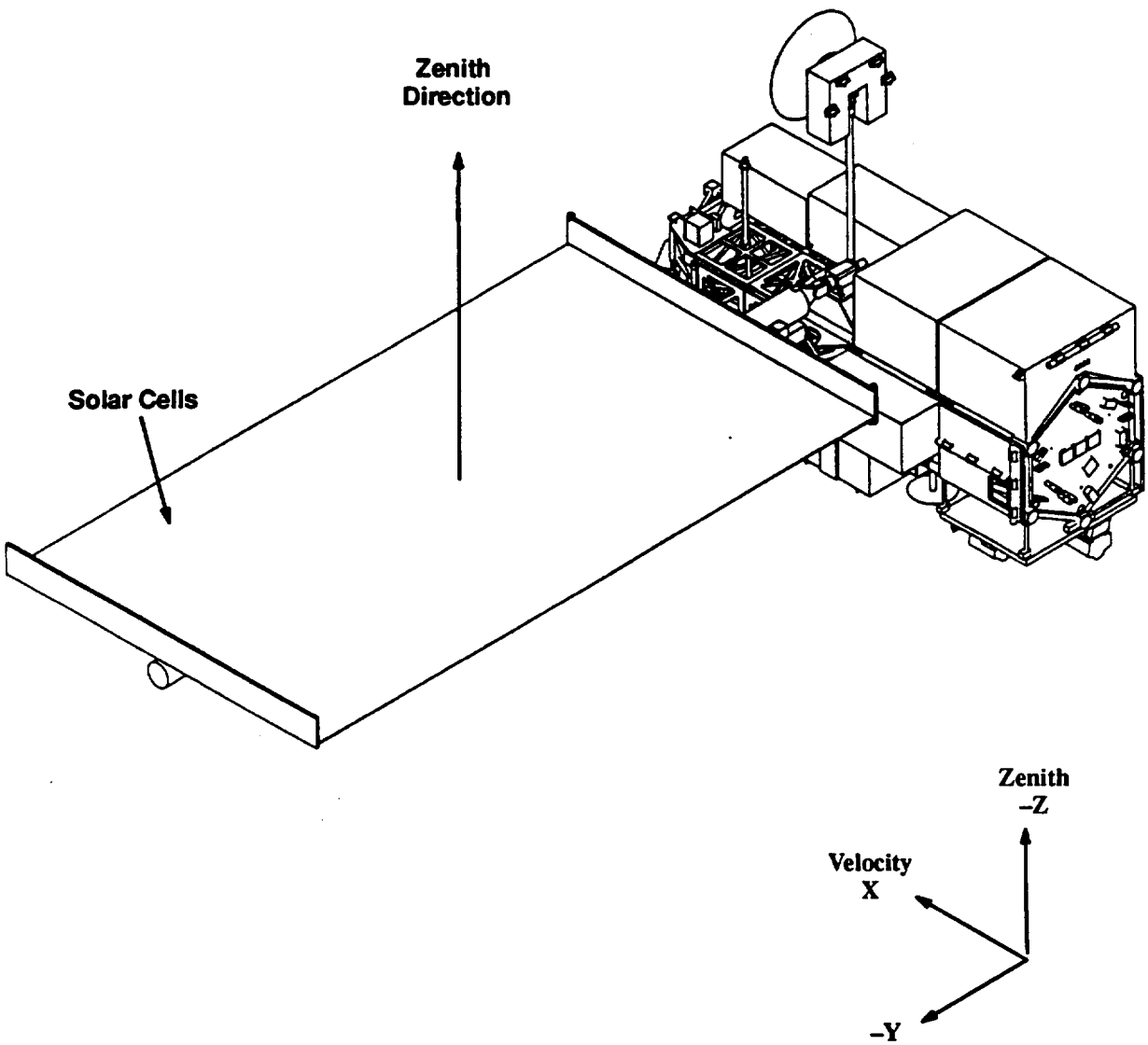

Figure 12. Solar Array Orientation Assumed for Case of Solar Array Tracking Failure: Cell–side array normal points toward zenith (–Z).

8 CONCLUSIONS AND RECOMMENDATIONS

- The earliest possible time for the solar array to begin tracking the sun is when the Spacecraft exits the first eclipse, at 82 minutes after go to internal power.
    - Recommendation: Deploy the solar array concurrently with the earth acquisition process in order to detect any anomalies in the deployment process as soon as possible.

  The final decision for timing of solar array deployment should be made after the solar array subcontractor has performed a thermal analysis to determine if there is any risk of excessive thermal distortions due to daytime deployment of the solar array, since the array would experience direct sun on the rear of the blanket and on the thin side of the assembly.

- For the nominal launch/ascent scenario, the battery DOD at the start of Spacecraft energy balance (at the exit from the first eclipse on–orbit) is estimated to be about 18% for a battery charging temperature of 20°C and about 22% for a battery charging temperature of 30°C. The provision of 153 W of Instrument launch power to MOPITT and ASTER/SWIR increased the 30°C value by about 1%, to 23% DOD.
- The time margin for solar array deployment is at least 157 minutes (1.6 orbits). This time margin is the time measured from the nominal sun tracking time (G+82 minutes) which could elapse before the battery DOD reaches 80%, assuming the worst case conditions of 30°C battery charging temperature and 153 W of Instrument launch power.

  Removing the Instrument launch power would increase the time margin by about 1 minute to 158 minutes. Decreasing the battery charging temperature to 20°C would increase the time margin to approximately 238 minutes (2.4 orbits).

  The actual time margin may be as much as 60 minutes longer because the any anomalies in the solar array deployment should become evident soon after the commencement of deployment at G + 22 minutes.

  The time margin of at least 1.6 orbits is considered adequate for problem identification and recovery actions. The FOT will have a nearly continuous communication link with the Spacecraft during the launch/ascent phase, so that any required response will be rapid.

    - Recommendation: Implement a risk mitigation plan for solar array deployment. The recommended plan is outlined in Section 5.2.
- 153 W of Instrument launch power for MOPITT and ASTER/SWIR has only a small impact on Spacecraft energy balance. The Instrument launch power increased the battery DOD in the nominal launch/ascent scenario by about 1%. The Instrument launch power decreased the time margin to recover from a solar array deployment failure by about 1 minute.
    - Recommendation: Grant MOPITT and ASTER's requests for launch power during the launch/ascent phase, with the understanding that power may be removed a few minutes after launch loads have passed. Incorporate Instrument launch power requirements in the respective UIIDs.
    - Recommendation: Seek ways to minimize the amount of power required by Instruments during launch in order to preserve adequate time margins.

- Recommendation: Consider Instrument launch power as a factor in the thermal analysis of the Spacecraft in the launch vehicle fairing in order to assess the impact of this additional thermal dissipation on the battery charging temperature. This analysis is scheduled for completion prior to the TCS PDR in May 1994.

- For a worst case energy balance failure in which the solar array ceases all power generation, the Spacecraft can survive on battery power for at least 149 minutes, or 1.5 orbits. This time margin is considered adequate to receive telemetry indicating the problem, identify the problem, and respond before the battery DOD exceeded 80%.
- For an energy balance failure caused by the inability of the solar array to track the sun, the time margin for recovery is bounded by the range of 4.8 to 24.6 orbits (8 to 41 hours). The worst orientation (i.e. smallest time margin) is the solar array with cell–side normal pointing toward nadir because the power generation is at a minimum for a stationary array. The best orientation is the solar array with cell–side normal pointing toward zenith because the power output is at a maximum for a stationary array. This range of time margins is considered adequate to allow problem identification and recovery actions.
- Battery charging temperature is a significant factor in the solar array deployment time margin because it affects the charging capacity of the batteries. Increasing the pre–launch battery charging temperature to 30°C from 20°C reduces the battery capacity by about 16%.
    - Recommendation: Maintain a goal of cooling the batteries to approximately 20°C during charging operations in the launch vehicle fairing prior to launch, using localized coolant flow for the battery panels if necessary.

9 REFERENCES

1. EOS–GN&C–250, "Nominal Launch/Ascent Timeline for EOS–AM (Repsonse to action item #3, GN&C EOS–AM PDR)," J. Boka, 1/28/93.

2. Preliminary Failure Modes and Effect Analysis and Critical Items List for the EOS Solar Array Assembly, April 26, 1993.

3. Award Fee Milestone TA–29, "Launch/Deploy Sequence", February 23, 1990

4. EOS–DN–050, "Solar Array Assembly Design and Testing," R. Kimber, 8/13/92.

5. "MOPITT Launch Power Plan", 7/27/93 fax from J. Jackett (COM DEV) to R. Thomas (Martin Marietta), Reference JH1000.

6. ASTER/SWIR Launch Power Requirements, 7/30/93 fax from S. Lambros (GSFC) to J. Cymmerman (Martin Marietta).

Appendix A

Solar Array Power Output for the Case of No Sun Tracking

(Assumptions are explained in Section 6.)

Power output from array under normal operating conditions (Watts) : 5,261
(includes Beta angle of 23.9 degrees)

Time (minutes)	S/C Position from Equator (Degrees)	Power Factor Cos(SA Angle)	Array Output Watts
0	20.00	.94	4,944
1.0	23.64	.92	4,819
2.0	27.28	.89	4,676
3.0	30.92	.86	4,513
4.0	34.56	.82	4,332
5.0	38.20	.79	4,134
6.0	41.84	.74	3,919
7.0	45.48	.70	3,688
8.0	49.13	.65	3,443
9.0	52.77	.61	3,183
10.0	56.41	.55	2,911
11.0	60.05	.50	2,627
12.0	63.69	.44	2,332
13.0	67.33	.39	2,028
14.0	70.97	.33	1,715
15.0	74.61	.27	1,396
16.0	78.25	.20	1,071
17.0	81.89	.14	742
18.0	85.53	.08	410
19.0	89.17	.01	76
20.0	92.81	-.05	0
21.0	96.45	-.11	0
22.0	100.09	-.18	0
23.0	103.74	-.24	0
24.0	107.38	-.30	0
25.0	111.02	-.36	0
26.0	114.66	-.42	0
27.0	118.30	-.47	0
28.0	121.94	-.53	0
29.0	125.58	-.58	0
30.0	129.22	-.63	0
31.0	132.86	-.68	0
32.0	136.50	-.73	0
33.0	140.14	-.77	0
34.0	143.78	-.81	0
35.0	147.42	-.84	0
36.0	151.06	-.88	0
37.0	154.70	-.90	0
38.0	158.34	-.93	0
39.0	161.99	-.95	0
40.0	165.63	-.97	0
41.0	169.27	-.98	0
42.0	172.91	-.99	0
43.0	176.55	-1.00	0
44.0	180.19	-1.00	0
45.0	183.83	-1.00	0
46.0	187.47	-.99	0
47.0	191.11	-.98	0
48.0	194.75	-.97	0
49.0	198.39	-.95	0
50.0	202.03	-.93	0
51.0	205.67	-.90	0
52.0	209.31	-.87	0
53.0	212.95	-.84	0
54.0	216.60	-.80	0
55.0	220.24	-.76	0

59.0	234.80	-.58	0
60.0	238.44	-.52	0
61.0	242.08	-.47	0
62.0	245.72	-.41	0
63.0	249.36	-.35	0
64.0	253.00	-.29	0
65.0	256.64	-.23	0
66.0	260.28	-.17	0
67.0	263.92	-.11	0
68.0	267.56	-.04	0
69.0	271.21	.02	111
70.0	274.85	.08	444
71.0	278.49	.15	776
72.0	282.13	.21	1,105
73.0	285.77	.27	1,430
74.0	289.41	.33	1,748
75.0	293.05	.39	2,060
76.0	296.69	.45	2,363
77.0	300.33	.50	2,657
78.0	303.97	.56	2,940
79.0	307.61	.61	3,211
80.0	311.25	.66	3,469
81.0	314.89	.71	3,713
82.0	318.53	.75	3,942
83.0	322.17	.79	4,156
84.0	325.82	.83	4,352
85.0	329.46	.86	4,531
86.0	333.10	.89	4,692
87.0	336.74	.92	4,833
88.0	340.38	.94	4,955
89.0	344.02	.96	5,058
90.0	347.66	.98	5,139
91.0	351.30	.99	5,200
92.0	354.94	1.00	5,240
93.0	358.58	1.00	5,259
94.0	2.22	1.00	5,257
95.0	5.86	.99	5,233
96.0	9.50	.99	5,189
97.0	13.14	.97	5,123
98.0	16.78	.96	5,037

MARTIN MARIETTA
ASTRO SPACE

EOS–DN– SE&I–043 Rev A

DESIGN NOTE

TITLE: EOS Pointing Error Budget, Prediction & Verification Concept

AUTHOR: Terry Ford

AUTHOR'S MANAGER: Scott Carey DATE

SE&I MANAGER: Scott Carey DATE

CHIEF ENGINEER: Dennis Longcoy D. Longcoy DATE 8/27/93

REVISIONS

LETTER	DESCRIPTION	DATE	AUTHOR
–	Initial Release	4 Dec 92	H. Silverman
A	Spacecraft PDR Update	31 Aug 93	T.Ford

MARTIN MARIETTA
ASTRO SPACE

DESIGN NOTE SUMMARY

DN#: EOS-DN-SE&I-043 Revision: A Date: 31 August, 1993

Title: EOS Pointing Error Budget, Prediction & Verification Concept

Author: Terry Ford Source ID (ESTA, PD, Memo, etc.):

Purpose/Questions Answered:

Provide SECN controlled pointing error allocations, current performance assessments, and verification plans.
The Spacecraft PDR update to this design note includes new performance assessments.

Summary/Answers:

Pointing Knowledge – allocated and predicted performance meet interface requirements.
Pointing Accuracy – allocated and predicted performance meet interface requirements.
Pointing Jitter (1.8 Seconds) – Predicted performance at 1.8 seconds does not meet requirements.
Pointing Jitter (9 Seconds) – allocated and predicted performance meet boresight requirements.
Pointing Stability (420 Seconds) – allocated and predicted performance meet boresight requirements.

Recommendations: (Be Specific)	Accepted	Rejected	Baselined	Date
1) Reduce SWIR Stirling Cycle Cooler disturbances. 2) Update positioning error knowledge and accuracy allocations at Spacecraft CDR. 3) Update perdicted performance at Spacecraft PDR.				

Open Items/Action Required	Responsible Person	Due Date

Comments

EOS Form 007-02 0

Form Completed By [signature] Date 8/27/93 Page ___ of ___

TABLE OF CONTENTS

SECTION / PARAGRAPH	TITLE	PAGE
1	INTRODUCTION	1
1.1	Summary	1
1.1.1	Caveats	1
1.2	Allocation Changes	2
2	COORDINATE FRAMES	3
2.1	Orbital Reference Coordinate Frame	3
2.2	Spacecraft Body–Fixed Reference Coordinate Frame	4
2.3	Spacecraft Reference Axes	4
2.4	The Instrument Alignment Cube (IAC) Coordinate Frame	4
3	SPACECRAFT POINTING REQUIREMENTS	7
3.1	Spacecraft Pointing Knowledge Requirements	8
3.2	Spacecraft Pointing Accuracy Requirements	8
3.3	Spacecraft Pointing Stability and Jitter Requirements	8
3.4	Instrument Specific Pointing Requirements	9
4	METHOD TO DETERMINE STANDARD DEVIATION	11
4.1	Statistical Determination	11
4.2	Worst–Case Analysis	11
5	POINTING ERROR DEFINITIONS AND ALLOCATIONS	13
5.1	Attitude Determination Error	14
5.1.1	Star Catalog Error (Dynamic)	14
5.1.1.1	Line Item Definition	14
5.1.1.2	Allocation Rationale	14
5.1.1.3	Prediction Source	15
5.1.2	Coordinate Frame Error	15
5.1.2.1	Line Item Definition	15
5.1.2.2	Allocation Rationale	15

TABLE OF CONTENTS (Continued)

SECTION / PARAGRAPH	TITLE	PAGE
5.1.2.3	Prediction Source	15
5.1.3	Velocity Aberration	16
5.1.3.1	Line Item Definition	16
5.1.3.2	Allocation Rationale	16
5.1.3.3	Prediction Source	17
5.1.4	Update Filter Performance	17
5.1.4.1	Line Item Definition	17
5.1.4.2	Allocation Rationale	17
5.1.4.3	Prediction Source	17
5.1.5	Star Position Accuracy	18
5.1.5.1	Line Item Definition	18
5.1.5.2	Allocation Rationale	18
5.1.5.3	Prediction Source	18
5.2	**Attitude Control Error**	**18**
5.2.1	Control System Performance	19
5.2.1.1	Line Item Definition	19
5.2.1.2	Allocation Rationale	21
5.2.1.3	Prediction Source	21
5.2.2	Housekeeping Disturbance Errors	21
5.2.2.1	Line Item Definition	21
5.2.2.2	Allocation Rationale	22
5.2.2.3	Prediction Source	22
5.2.3	Instrument Disturbance Errors	22
5.2.3.1	Line Item Definition	22
5.2.3.2	Allocation Rationale	23
5.2.3.3	Prediction Source	23
5.3	**Ephemeris Error**	**23**
5.3.1	Category Definition	23
5.3.2	Allocation Rationale	24
5.3.3	Prediction Source	25

TABLE OF CONTENTS (Continued)

SECTION / PARAGRAPH	TITLE	PAGE
5.4	**Thermal Distortion Errors**	**25**
5.4.1	Star Tracker Mounts Thermal Distortion	25
5.4.1.1	Line Item Definition	25
5.4.1.2	Allocation Rationale	25
5.4.1.3	Prediction Source	25
5.4.2	Navigation Base Plate Thermal Distortion	26
5.4.2.1	Line Item Definition	26
5.4.2.2	Allocation Rationale	27
5.4.2.3	Prediction Source	27
5.4.3	Navigation Base Plate Mounts Thermal Distortion	27
5.4.3.1	Line Item Definition	27
5.4.3.2	Allocation Rationale	27
5.4.3.3	Prediction Source	27
5.4.4	Spacecraft Structure Thermal Distortion	27
5.4.4.1	Line Item Definition	27
5.4.4.2	Allocation Rationale	28
5.4.4.3	Prediction Source	28
5.4.5	Instrument Mounting Plate Thermal Distortion	28
5.4.5.1	Line Item Definition	28
5.4.5.2	Allocation Rationale	28
5.4.5.3	Prediction Source	28
5.4.6	Instrument Kinematic Mounts Thermal Distortion	29
5.4.6.1	Line Item Definition	29
5.4.6.2	Allocation Rationale	29
5.4.6.3	Prediction Source	29
5.5	**Structural Dynamics Errors**	**29**
5.5.1	Spacecraft Structure Dynamics	29
5.5.1.1	Line Item Definition	29
5.5.1.2	Allocation Rationale	29
5.5.1.3	Prediction Source	30

TABLE OF CONTENTS (Continued)

SECTION / PARAGRAPH	TITLE	PAGE
5.5.2	Attitude Sensor and Navigation Base Plate Structure Dynamics	30
5.6	**Moisture Distortion Errors**	**30**
5.6.1	Navigation Base Plate Moisture Distortion	30
5.6.1.1	Line Item Definition	30
5.6.1.2	Allocation Rationale	30
5.6.1.3	Prediction Source	31
5.6.2	Spacecraft Structure Moisture Distortion	31
5.6.2.1	Line Item Definition	31
5.6.2.2	Allocation Rationale	31
5.6.2.3	Prediction Source	31
5.6.3	IMP Moisture Distortion	31
5.6.3.1	Line Item Definition	31
5.6.3.2	Allocation Rationale	31
5.6.3.3	Prediction Source	32
5.7	**Measurement Errors**	**32**
5.7.1	Star Tracker Alignment Knowledge	32
5.7.1.1	Line Item Definition	32
5.7.1.2	Allocation Rationale	32
5.7.1.3	Prediction Source	32
5.7.2	Star Tracker to NBR Cube	32
5.7.2.1	Line Item Definition	32
5.7.2.2	Allocation Rationale	33
5.7.2.3	Prediction Source	33
5.7.3	NBR Cube to MRC	33
5.7.3.1	Line Item Definition	33
5.7.3.2	Allocation Rationale	33
5.7.3.3	Prediction Source	33
5.7.4	Instrument Alignment Cube to MRC	33
5.7.4.1	Line Item Definition	33
5.7.4.2	Allocation Rationale	34

TABLE OF CONTENTS (Continued)

SECTION / PARAGRAPH	TITLE	PAGE
5.7.4.3	Prediction Source	34
5.8	**Positioning Errors**	**34**
5.8.1	Manufacturing Assembly Fixture Clamp Release	34
5.8.1.1	Line Item Definition	34
5.8.1.2	Allocation Rationale	34
5.8.1.3	Prediction Source	34
5.8.2	Instrument Yaw Align and Shim Resolution	35
5.8.2.1	Line Item Definition	35
5.8.2.2	Allocation Rationale	35
5.8.2.3	Prediction Source	35
5.8.3	NBR Yaw Align and Shim Resolution	35
5.8.3.1	Line Item Definition	35
5.8.3.2	Allocation Rationale	36
5.8.3.3	Prediction Source	36
5.9	**Gravity Errors**	**36**
5.9.1	Star Tracker to NBR Cube	36
5.9.1.1	Line Item Definition	36
5.9.1.2	Allocation Rationale	37
5.9.1.3	Prediction Source	37
5.9.2	Instrument Alignment Cube to NBR Cube	37
5.9.2.1	Line Item Definition	37
5.9.2.2	Allocation Rationale	37
5.9.2.3	Prediction Source	38
5.9.3	IMP Bending	38
5.9.3.1	Line Item Definition	38
5.9.3.2	Allocation Rationale	38
5.9.3.3	Prediction Source	38
5.10	**Launch Shift Errors**	**38**
5.10.1	Star Tracker Boresight Launch Shift	39
5.10.1.1	Line Item Definition	39

TABLE OF CONTENTS (Continued)

SECTION / PARAGRAPH	TITLE	PAGE
5.10.1.2	Allocation Rationale	39
5.10.2	Star Tracker Mount Launch Shift	39
5.10.2.1	Line Item Definition	39
5.10.2.2	Allocation Rationale	39
5.10.2.3	Prediction Source	39
5.10.3	Nav. Base Plate Kinematic Mount Launch Shift	39
5.10.3.1	Line Item Definition	39
5.10.3.2	Allocation Rationale	39
5.10.3.3	Prediction Source	40
5.10.4	Spacecraft Structure Launch Shift	40
5.10.4.1	Line Item Definition	40
5.10.4.2	Allocation Rationale	40
5.10.4.3	Prediction Source	40
5.10.5	Instrument Kinematic Mount Launch Shift	41
5.10.5.1	Line Item Definition	41
5.10.5.2	Allocation Rationale	41
5.10.5.3	Prediction Source	41
5.11	**Remate Errors**	**41**
5.11.1	Navigation Base Plate Removal	42
5.11.1.1	Line Item Definition	42
5.11.1.2	Allocation Rationale	42
5.11.1.3	Prediction Source	42
5.11.2	Instrument Mounting Plate Removal	42
5.11.2.1	Line Item Definition	42
5.11.2.2	Allocation Rationale	42
5.11.2.3	Prediction Source	42
5.12	**Star Position Accuracy**	**42**
5.12.1	Category Definition	42
5.12.2	Allocation Rationale	43
5.12.3	Prediction Source	43

TABLE OF CONTENTS (Continued)

SECTION / PARAGRAPH	TITLE	PAGE
6	POINTING BUDGETS AND PREDICTIONS	44
6.1	Pointing Knowledge	44
6.2	Pointing Accuracy	52
6.3	Pointing Jitter and Stability	62
6.3.1	Pointing Stability @ 420 seconds at the MISR Instrument Boresight	64
6.3.2	Pointing Stability @ 9 second at the VNIR Instrument Boresight	64
6.3.3	Pointing Stability @ 1.8 seconds at the SWIR Instrument Boresight	64
7	Contract End Item Specification Allocation	68
7.1	Pointing Knowledge	68
7.2	Pointing Accuracy	68
7.3	Pointing Jitter/Stability	69
8	References	72

LIST OF FIGURES

FIGURE	TITLE	PAGE
Figure 1.	Orbital Reference Coordinate Frame	3
Figure 2.	Spacecraft Body–Fixed Reference Coordinate Frame	5
Figure 3.	Spacecraft Reference Axis and Instrument Mounting Cube Coordinate Frame	6
Figure 4.	Pointing Requirement Definition	7
Figure 5.	The Earth–Centered Inertial Frame	16
Figure 6.	Pointing Error Induced By Ephemeris Error	24
Figure 7.	A Sun–Synchronous Orbit	26
Figure 8.	Pointing Knowledge Line Items	45
Figure 9.	Pointing Accuracy Line Items	53
Figure 10	Pointing Stability at The Instrument Boresight	63

LIST OF TABLES

TABLE	TITLE	PAGE
Table I.	Spacecraft Attitude Requirements From RD	8
Table II.	Instrument Specific Pointing Requirements	9
Table III.	Pointing Error Categories	13
Table IV.	Line Item Allocation Status Definitions	13
Table V.	Worst Case Pointing Knowledge Budget / Prediction	46
Table VI.	Worst Case Pointing Accuracy Budget / Prediction	54
Table VII.	Pointing Stability Budget @ 420 Seconds at the MISR Instrument Boresight	65
Table VIII.	Pointing Stability Budget @ 9 Second at the VNIR Instrument Boresight	66
Table IX.	Pointing Stability Budget @ 1.8 Seconds at the SWIR Instrument Boresight	67

1 INTRODUCTION

Overview - This design note details the development of allocations, predictions, and verification plans for the EOS-AM spacecraft pointing errors. Allocation rationale and verification status are provided for each line item. The rationale is either based on: 1) flight/test data from other spacecraft programs; or 2) EOS-A1 analysis; or 3) EOS-AM-specific worst-case analysis. The verification status identifies whether (A) detailed analysis indicates that the allocation is currently met, (B) preliminary analysis supports the allocation but further analysis is required to validate the allocation, or (C) preliminary analysis indicates that the allocation is not currently met. For each pointing budget the applicable line items and the method used to combine both the line items and categories are clearly identified.

Scope - Allocations and predictions for jitter and stability are provided to the instrument boresight. Pointing knowledge and pointing accuracy allocations and predictions are provided to the bus-to-instrument interface. The budgets allocate pointing errors to meet all of the instrument requirements. The jitter/stability budgets are instrument specific, whereas the pointing accuracy and pointing knowledge budgets represent the worst case performance for all line-items.

Section 2.0 defines coordinate frames. Section 3.0 defines pointing requirements. Section 4.0 defines the method of standard deviation determination. Section 5.0 provides pointing error source definitions and allocations. Section 6.0 provides the pointing budgets. Section 7.0 provides the Contract End Item Specification subsystem requirements. The allocations listed in this document are the "design-to" numbers for preliminary design and are SECN controlled. The predictions are based on the latest baseline information available at the time this design note is being published.

Revision A of this design incorporates updated predictions for specific knowledge, accuracy, and jitter/stability error categories as detailed in Section 6.0. These updates reflect analyses performed in preparation for Spacecraft PDR. No changes have been made to the allocations established in the initial release of this design note or in the recommended CEI requirements.

1.1 Summary

There are several areas in the pointing budget where the current line item predictions fall short of the allocations. However, the overall predictions show that all system level requirements are currently met.

1.1.1 Caveats

The jitter and stability predictions incorporated in this release give results at the instrument boresight based on the angular rotations recorded at the worst case node of the instrument provided Finite Element Models. Translations at these node points are not available from the analysis. It is understood that this definition is not a true picture of the jitter at the boresight, however the detailed knowledge of the instruments is not available to the degree necessary to model the optical path. The analysis results do provide however an understanding of the significant jitter sources. These preliminary boresight predictions do emphasize the need to reduce the effects of the Stirling Cycle Coolers in general, and the SWIR cooler specifically.

Pointing stability performance around the terminators has been identified as a risk area. Past analysis has shown that Spacecraft disturbance due to Solar Array thermal snap may be larger than

desired. The solar array vendor (TRW) has, however provided analysis to support the claim that thermal snap will not be significant with the type of array being used for the EOS AM Spacecraft. In spite of this, it is important for instruments to evaluate the impact of large disturbances (on the order of 25 arc-seconds) around the terminators and develop plans to assure that any data taken in these areas are still useful. Project management has taken the position that solar array snap will not drive the array design.

1.2 Allocation Changes

Revision A of this design note includes no changes to the allocations as documented in the initial release of this document. Changes to the allocations given herein, are under SECN Control.

2 COORDINATE FRAMES

2.1 Orbital Reference Coordinate Frame

General Description – The Orbital Reference Coordinate Frame moves with the satellite along the space trajectory and defines the desired inertial orientation of the satellite. For EOS-AM, this target pointing frame is geocentric. If pointing were perfect, the axes defined by the instrument boresight would be aligned with the Orbital Reference Coordinate Frame at each point in the orbit. The frame is right-handed and orthogonal.

Detailed Axes Definition – The +z-axis is a line from the Spacecraft center of mass to the center of the Earth (center of the Earth defined as the origin or the Earth Centered Inertial Frame). The +y-axis is a line normal to the z-axis and to the Spacecraft's instantaneous velocity vector (negative orbit normal direction). The +x-axis completes the right hand set. Due to orbit eccentricity, the x-axis and the Spacecraft's instantaneous velocity vector will not be co-aligned.

Illustration – Figure 1, below, illustrates the Orbital Reference Coordinate Frame in the plane of the Spacecraft orbit for science mode. The z-axis is nadir. The y-axis is negative orbit normal. The x-axis has the same polarity as the Spacecraft's instantaneous velocity vector (v) and is located in the plane formed by the z-axis and the instantaneous velocity vector.

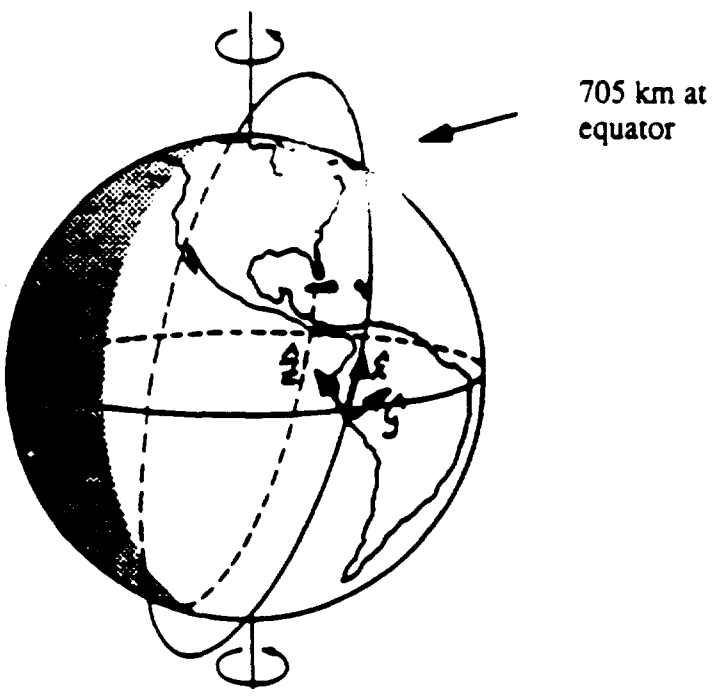

Figure 1. Orbital Reference Coordinate Frame

2.2 Spacecraft Body-Fixed Reference Coordinate Frame

A right-hand, orthogonal, body-fixed reference coordinate system shall be used for the Spacecraft and its components as shown in Figure 2. During normal science mode operations the Z-axis shall pass through the center of the earth, with +Z being nadir (toward the earth). The Y-axis shall be nominally along the orbit normal, with +Y toward the anti-sun side. The X-axis shall be normal to the Spacecraft separation plane with +X in the general direction of the Spacecraft velocity vector.

The Spacecraft origin shall be located at the geometric center of the Primary Structure Bulkhead #1, the bulkhead to which the PM baseplate attaches.

2.3 Spacecraft Reference Axes

General Description – The Spacecraft Reference Axis is defined by the Navigation Base Reference. The Navigation Base Reference is located in the GN&C Sensor Equipment Module (EM) enclosure on the optical bench. The Spacecraft's attitude control system attempts to align the Spacecraft Reference Axis with the Orbital Reference Coordinate Frame. The objective of alignment is to align the instrument's optical cube with the Navigation Base Reference.

Detailed Axes Definition – The x, y, and z axes of the Spacecraft Reference Axis are nominally aligned with the x, y, and z axes of the Spacecraft Body-Fixed Coordinate Frame prior to launch.

Illustration – Figure 3, illustrates the Spacecraft Reference Axis.

2.4 The Instrument Alignment Cube (IAC) Coordinate Frame

General Description – Instruments are either mounted on an Instrument Mounting Plate (IMP) or directly mounted to the Spacecraft truss. Each instrument will have an optical cube to support instrument alignment. This IAC defines a coordinate frame to which the instrument pointing can be referenced.

Detailed Axes Definition – The x, y, and z axes of the IAC Coordinate Frame are nominally aligned to the x, y, and z axes of the Spacecraft Reference Axis.

Illustration – Figure 3, shows the IAC Coordinate Frame for a typical instrument. Each instrument may have a different location for the optical cube, but it shall always be close to the instrument boresight.

Figure 2. Spacecraft Body-Fixed Reference Coordinate Frame

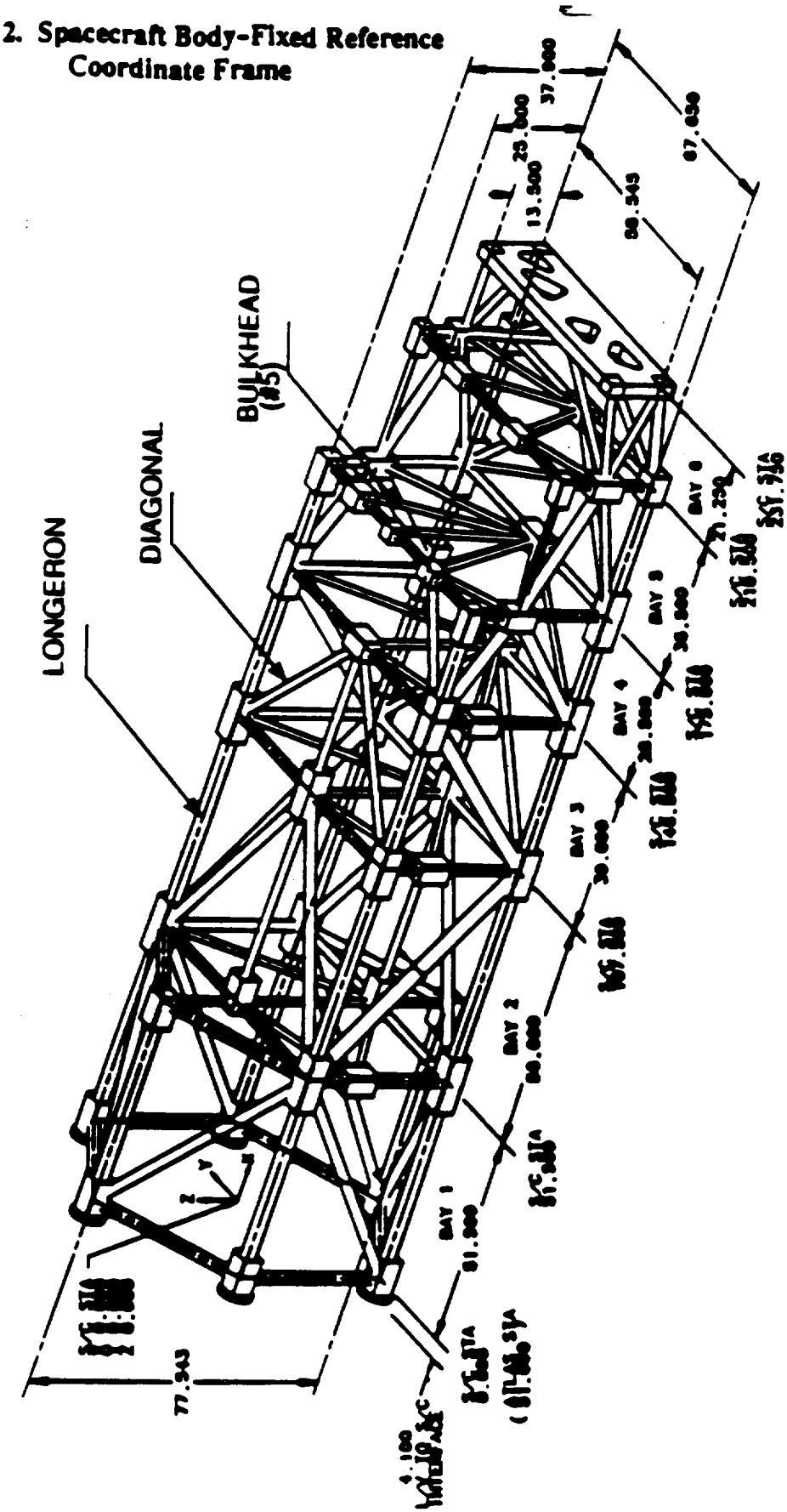

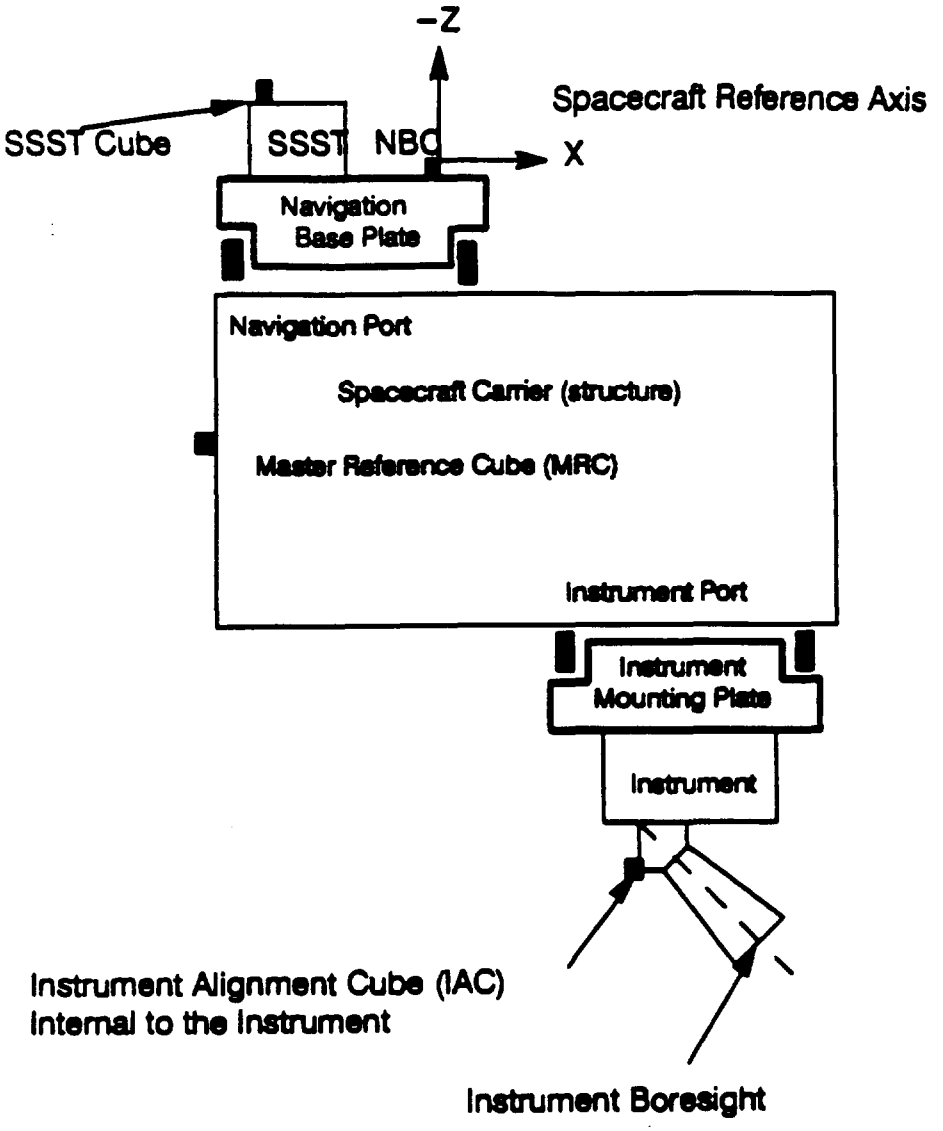

Figure 3. Spacecraft Reference Axis and Instrument Mounting Cube Coordinate Frame

3 SPACECRAFT POINTING REQUIREMENTS

Definitions – The Spacecraft's pointing requirements are divided into three distinct categories: pointing knowledge, pointing accuracy, pointing stability/jitter. Figure 4, below, illustrates graphically the definitions for each aforementioned category.

Pointing Knowledge – the error in the determination of the actual pointing direction of the instrument to Spacecraft interface. Pointing knowledge can refer to a real-time (on-board) determination or a post-processed (after-the-fact) determination. Requirements and performance discussed herein are real-time.

Pointing Accuracy – the angle between the actual pointing direction and the desired pointing direction of a selected reference frame about a given axis. In the case of the EOS-AM Spacecraft requirements, the actual pointing direction is the orientation of the Spacecraft to instrument interface; the desired pointing direction is the center of the Earth centered Inertial Reference Frame.

Pointing Stability – the peak-to-peak variation of the actual pointing direction over relatively long time intervals, per axis.

Pointing Jitter – the peak-to-peak variation of the actual pointing direction over relatively short time intervals, per axis.

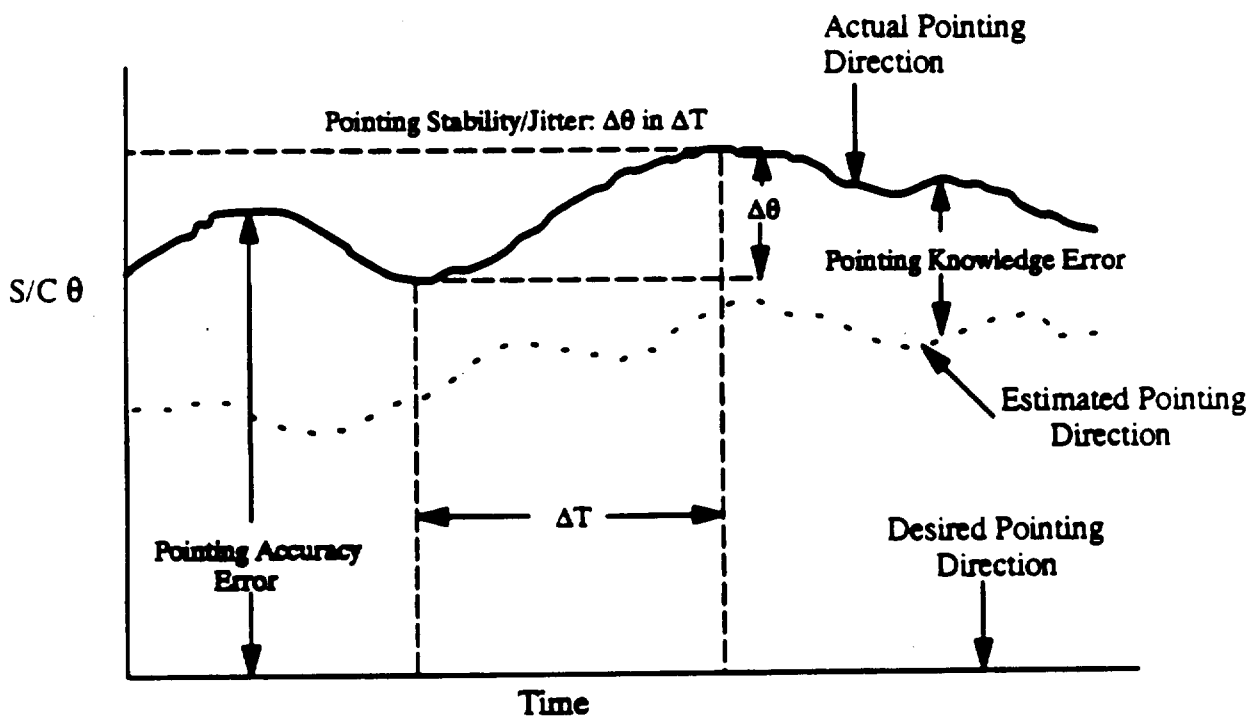

Figure 4. Pointing Requirement Definition

3.1 Spacecraft Pointing Knowledge Requirements

Table I. Spacecraft Attitude Requirements From RD

	Requirement per axis(1),(2) (arc-sec)
Pointing Knowledge	90
Pointing Accuracy	150
Pointing Stability	TBD(3)
Pointing Jitter	TBD(3)

Note: (1)Measurements apply at the instrument interface
(2)The spacecraft requirements as shown are 3σ, and apply during science mode operations.
(3)The UIIDs (see Table II) specify the stability and jitter requirements.

The RD specifies pointing knowledge requirements at the bus-to-instrument interface, as indicated in Table I. Pointing knowledge is with respect to the Orbital Reference Coordinate Frame.

- For pointing knowledge at the instrument interface, the selected reference frame is defined by the IAC.
- The pointing knowledge requirements are real-time requirements.
- A pointing knowledge error will also exist between the IAC and the axes defined by the instrument's boresight.

3.2 Spacecraft Pointing Accuracy Requirements

The RD specifies a pointing accuracy requirement at the bus-to-instrument interface, as indicated in Table I. Pointing accuracy is relative to the Orbital Reference Coordinate Frame (the target frame).

- For pointing accuracy at the instrument interface, the selected reference frame is defined by the IAC.
- A pointing accuracy error will also exist between the IAC and the axes defined by the instrument's boresight.

3.3 Spacecraft Pointing Stability and Jitter Requirements

The RD currently indicates TBD as the pointing stability and jitter requirements at the instrument interface, as indicated in Table I.

- For pointing stability and jitter at the instrument interface, the selected reference frame is defined by the instrument mounting cubes.
- Pointing stability and jitter errors also exist between the IAC and the axes defined by the instrument's boresight.

3.4 Instrument Specific Pointing Requirements

Overview - The EOS-AM instrument set is as follows: ASTER (SWIR, TIR, and VNIR), CERES, MISR, MODIS, and MOPITT. The pointing requirements found in the RD referenced to the bus-to-instrument interface are intended to meet the needs of these instruments. The instrument specific pointing requirements are detailed in the individual Unique Instrument Interface Documents as summarized in Table II. The pointing budgets given in section 7 provide allocations that meet all of these requirements.

Table II. Instrument Specific Pointing Requirements [1]

UIID Date	Jan 93	Jan 93	Jan 93	Mar 93	July 93	Nov 92	July 93
Category	**SWIR**	**TIR**	**VNIR**	**CERES**	**MISR**	**MODIS**	**MOPITT**
Pointing Knowledge at the Instrument Boresight [arc-sec, 3σ]							
X	120	120	120 [3]	215 [2]	[4]	141 [2]	300
Y	120	120	120 [3]	215 [2]		141 [2]	300
Z	720	720	120 [3]	215 [2]		141 [2]	300
Pointing Accuracy at the Instrument Boresight [arcsec, 3σ]							
X	360	360	360	360	1373	3600	500
Y	360	360	360	360	1373	3600	500
Z	1080	1800	360	360	1373	3600	500

Table II (Cont'd) Instrument Specific Pointing Requirements[1]

	ASTER						
Category	**SWIR**	**TIR**	**VNIR**	**CERES**	**MISR**	**MODIS**	**MOPITT**
Pointing Jitter and Stability [arcsec, 3σ]							
1 sec X	5.2	15.8			8	1031	
Y	5.2	15.8			8	47	
Z	13.7	40.9			8	1031	
1.8 sec X	**3.5**						
Y	**3.5**						
Z	9.1						
6 sec, X				79			
Y				79			
Z				79			
9 sec X			18				
Y			**12**				
Z			60				
12.47 sec X							322
Y							322
Z							322
420 sec, X					**20**		
Y					**20**		
Z					**20**		
480 sec X			26.4				
Y			26.4				
Z			68.6				

[1] – Unless otherwise stated, the requirements in this table were drawn from the Unique Instrument Interface Documents.

[2] – The requirement is stated as post-processed, but it is unclear who is responsible for the processing of pointing and orbit information.

[3] – Real time

[4] –The MISR UIID states that instrument pointing knowledge prior to flight geometric calibration must be sufficient to verify that the allocated instrument accuracy requirements are met at manufacture, through launch, and during instrument operations.

Bold entries represent driving requirements.

4 METHOD TO DETERMINE STANDARD DEVIATION

The EOS-AM pointing requirements (Section 3.0) are specified as 3σ values. Therefore, for each error source within each pointing budget, rationale is required to explain why the allocation for that error source represents a 3σ standard deviation. To determine the proper statistical representation, each error source will be classified into one of two possible categories:

Category 1: Error Sources with a Known Probability Distribution
Category 2: Error Sources with an Unknown Probability Distribution

For those error sources that have a known or assumed probability distribution, the calculation of the standard deviation involves the use of standard statistical procedures. For those error sources that do not have a known or assumed probability distribution, an extreme worst-case predict is assumed to represent the 3σ value.

4.1 Statistical Determination

The probability distribution for some error sources will be known. For these error sources, statistical properties will be used to determine the standard deviation, σ. Then, a multiplication by three yields the 3σ value. In these cases, the standard deviation is calculated using the following well-known equation:

$\sigma^2 = E[x^2] - (E[x])^2$
or
(variance) = (standard deviation)^2 = {Mean Square - (Mean)^2}

Here, $\sigma 2$ is the variance; σ is the standard deviation; and E[x] is the mean which is calculated as:

$$E[x] = \int_0^T x(t) \frac{dt}{T}$$

Here, x(t) is the value of the error source as a function of time; and T is the time interval.

4.2 Worst-Case Analysis

The probability distribution for some error sources will not be known. For these error sources, an extreme worst-case analysis is performed. The extreme worst-case predict is assumed to represent the 3σ value. The extreme worst-case predict, in most cases, should represent statistically a standard deviation greater than 3σ, because extreme worst-case analyses often assume physically unrealizable or highly improbable scenarios. Therefore, 3σ allocations derived by this method are conservative.

The 3σ standard deviation for some error sources will be calculated via worst-case analysis during the design phases of the program and later verified via testing supported by statistical reduction of test data during the integration and test phases of the program. In these cases, because the intent of the worst-case analysis is to provide an upper bound on the expected test results, the statistical

reduction of the actual test data should yield lower standard deviations than predicted via worst–case analysis. This provides a mechanism whereby the predicted pointing performance of the Eos–AM Spacecraft improves as the program progresses from the analytical verification phase to the test verification phase.

5 POINTING ERROR DEFINITIONS AND ALLOCATIONS

CATEGORIES – The Spacecraft pointing errors are subdivided into pointing error categories, as shown in Table III below.

Table III. Pointing Error Categories

Category	Type
Attitude Determination Error	dynamic
Attitude Control Error	dynamic
Ephemeris Error	dynamic
Structural Dynamics Error	dynamic
Thermal Distortion Error	both
Moisture Distortion Error	static
Measurement Error	static
Positioning Error	static
Gravity Error	static
Launch Shift Error	static
Remate Error	static

General definitions for each error category are provided. Each category is classified as either dynamic, static, or both. A static error either does not vary with time or has a long period relative to the longest stability requirement (420 sec). A dynamic error varies with time, the period is short relative to the stability requirement. Some categories have both static and dynamic pointing error components.

LINE ITEMS – A line item is a pointing error source within a pointing error category. All error sources to the instrument interface are defined. Although only IMP-mounted instruments are specifically addressed, the errors associated with direct-mount instruments are a subset of those for IMP-mounted instruments. Therefore these allocations are considered conservative for direct-mounted instruments.

ALLOCATIONS FOR LINE ITEMS – Each line item for pointing knowledge and pointing accuracy is assigned an allocation. Pointing jitter/stability allocations only go down to the pointing error category level. These allocations are the "design to" numbers for preliminary design. The rationale for each allocation is provided. Rationale consists either of: 1) flight/test data from other spacecraft programs; or 2) EOS-A1; or 3) EOS-AM-specific worst-case analysis. Each allocation is assigned a status as indicated in Table IV below.

Table IV. Line Item Allocation Status Definitions

"A" Status	=>	detailed analysis indicates that allocation is currently met
"B" Status	=>	further analysis is required to determine whether allocation is met
"C" Status	=>	preliminary analysis indicates that performance improvement is needed

An "A" status indicates that sufficient analysis has been completed or that sufficient flight/test data with appropriate similarity exists to assure that the allocation can be met. A "B" status indicates that

sufficient analysis has not been performed to date to justify the allocation. Future analysis is required. A "C" status indicates that preliminary analyses of the current design indicate that the allocation is not currently met. Design changes from the baseline or changed requirements may be necessary to meet these allocations.

Note: 0–P means Zero–to–Peak, P–P means Peak–to–Peak.

5.1 Attitude Determination Error

Category Definition – The Spacecraft attitude determination algorithm estimates the orientation of the Spacecraft Control Coordinate Frame (Section 2.3) relative to Earth Centered Inertial Coordinate frame of date, Figure 5. This estimate is based on star tracker and gyro data, each of which has some level of noise and some associated bias. Additionally, a star catalog is used to match up the sensed sightings with known star positions but the "known" positions are only known to within some tolerance.

The attitude determination error category does not include errors associated with the knowledge of the transformation matrix between the star tracker optical boresight axes and the Navigation Base Reference optical cube. These errors do influence the Spacecraft's pointing capabilities but they arise due to thermal and moisture distortions, launch shifts, and measurement errors. These errors are accounted for in the pointing budgets. However, they are included in the aforementioned pointing error categories. This method of bookkeeping must be kept in mind when comparing the attitude determination performance of the EOS Spacecraft with other spacecraft to avoid inappropriate comparison.

Line Items and Allocations – The attitude determination error category contains several line items. These line items include star catalog error, coordinate frame error, velocity aberration error, and update filter error. Each line item is a dynamic error. Therefore, allocations are required not only for the zero–to–peak error (used in knowledge and accuracy budgets) but also for the peak–to–peak error over various time periods (jitter/stability).

5.1.1 Star Catalog Error (Dynamic)

5.1.1.1 Line Item Definition

Star catalogs that list star positions with respect to an inertially fixed coordinate frame at a given time are often used as a reference to select a smaller catalog for use on–board a spacecraft. Catalog reduction is generally based on the performance characteristics (magnitude, separation, spectral class, etc.) of the spacecraft's star sensing device. Unfortunately the star position data (which is based on observations) listed in the reference star catalog are not perfect. The star catalog error line item of the attitude determination error category accounts for these uncertainties in the reference star catalog at the given time. Because this error is dynamic, it also effects stability and jitter.

5.1.1.2 Allocation Rationale

Zero–to–Peak – A star catalog has been developed for EOS based on a reduction of the SKYMAP catalog. This EOS catalog contains close to 700 stars which range in perceived magnitude from 2–5. The SKYMAP catalog lists the one sigma uncertainty in the position of each star resident in the

catalog. Out of the close to 700 stars selected for the EOS catalog, the maximum position error is 0.2 arc-sec, one sigma. The three sigma error is three times the one sigma error or 0.6 arc-sec. This is conservatively assumed to be the error on each axis. The allocation is assigned an "A" status due to the confidence associated with star position uncertainty estimates provided by the SKYMAP catalog.

5.1.1.3 Prediction Source

The prediction source is the same as that for the allocation. This prediction has not been updated as part of the PDR analysis.

5.1.2 Coordinate Frame Error

5.1.2.1 Line Item Definition

The coordinate frame uncertainty error accounts for several errors related to determining the position of a star in an inertial frame as a function of time. These errors include: 1) precession and nutation of the inertial frame with time; and 2) proper motion of stars with time. These motions are predictable and, therefore, the magnitude of this line item is a function of the on-board star catalog update frequency. Star catalog updates correct for these effects to within some tolerance. This tolerance is the coordinate frame uncertainty error. Because this error is dynamic, it also effects stability and jitter.

Nutation and Precession - Inertial frames rotate with time. For example, nutation and precession of the Earth Centered Inertial (ECI) Coordinate Frame axes occur due to the gravitational attractions of the Sun and Moon on the aspherical Earth. Precession of the north celestial pole and a westward movement of the vernal equinox result from a torque on the Earth due to the Sun. The period of this precession is 26000 years. Nutation of the north celestial pole results from a torque on the Earth due to the Moon. The period of this nutation is 18.6 years. Figure 5 illustrates the nutation and precession of the ECI coordinate frame. This inertial frame is commonly used on spacecraft to represent star positions. These effects are well known and predictable.

Proper Motion - Stars have their own intrinsic motion within the Galaxy. The change in the position of the star is called its proper motion and is known and catalogued for most of the brighter stars because star velocities and distances relative to the Earth are known. Therefore, this error source can be corrected for via star catalog updates.

5.1.2.2 Allocation Rationale

Nutation, precession, and proper motion effects are well known and predictable. Significant data exists and has been compiled with regard to this topic. This allocation is consistent with the allocations for the GSFC Landsat. The star catalog update frequency will be at least as frequent (baseline is one week) for EOS. If required, the catalogue update could be performed more often, thus improving performance. The UARS updates are performed every day. This allocation is assigned an "A" status due to similarity with respect to other GE/GSFC spacecraft.

5.1.2.3 Prediction Source

The prediction source is the same as that for the allocation. This prediction has not been updated as part of the PDR analysis.

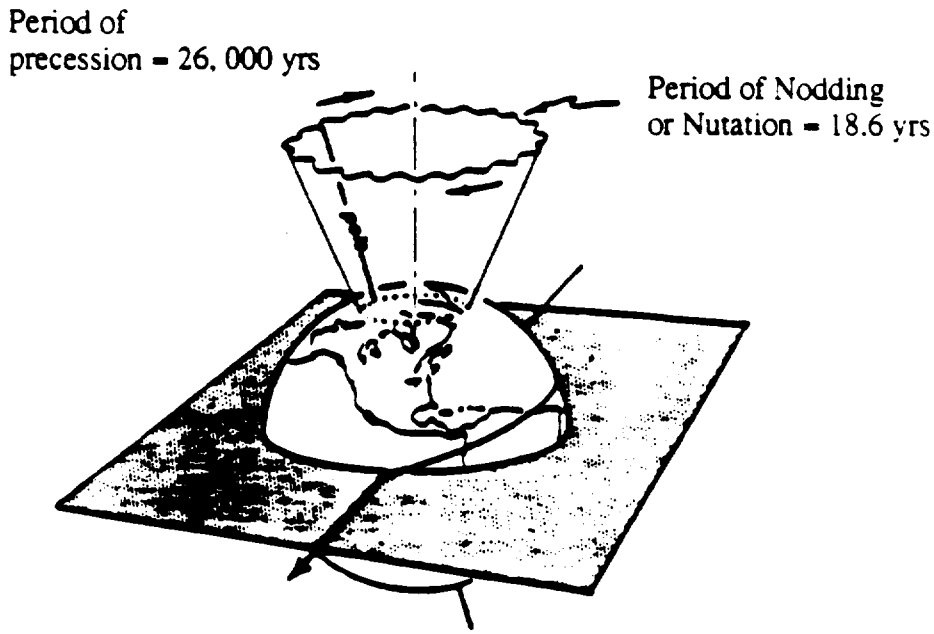

Figure 5. The Earth–Centered Inertial Frame

5.1.3 Velocity Aberration

5.1.3.1 Line Item Definition

Motion of an observer relative to a star results in an apparent shift in the position of the star as viewed by the observer. On a spacecraft, the star tracker is the observer. The star tracker velocity relative to the star results mainly from: 1) the Earth's velocity in its eccentric orbit about the Sun; and 2) the velocity of the spacecraft in its eccentric orbit about the Earth. In general, the magnitude of the velocity aberration error is proportional to the magnitude of the observer's velocity relative to the star divided by the speed of light. The apparent direction of the star shifts towards the velocity vector in the plane that contains both the velocity vector and the position vector from the observer to the star. The velocity aberration error is time varying due to the time varying nature of both the magnitude and direction of the velocity vector between the observer and a star.

5.1.3.2 Allocation Rationale

Zero–to–Peak – The EOS attitude determination software will contain a block of code that estimates and corrects for the velocity aberration associated with the selected star. Each time a new star is selected a velocity aberration correction will be applied to that star. The on–board ephemeris software estimates the velocity of the spacecraft at a high frequency (the baseline is 2 Hz or every

0.5 seconds) to within 0.16 m/sec. The velocity of the Earth in its orbit about the sun is also very well known (UARS estimates the direction of this velocity to within ~8 parts per million). Therefore, it is conservatively assumed that velocity aberration effects can be corrected to within 1%. The velocity of the earth in its orbit is approximately 34 km/sec whereas the velocity of the Spacecraft in its orbit is approximately 8 km/sec. In the physically unrealizable worst-case, these two velocity terms would be in the same direction and the magnitudes would add. In this worst-case, adding the two terms and dividing by the speed of light yields a maximum uncompensated velocity aberration error of 30 arc-sec. If the error could only be corrected to within 1%, a maximum velocity aberration error of 0.3 arc-sec would result. The allocation assumes that this is the worst-case error on each axis. This allocation is greater than the allocations for both the Landsat and UARS spacecraft (they used 0.1 arc-sec). This allocation is assigned an "A" status due to the results indicated in the EOS analysis and due to similarity with respect to other GE/GSFC spacecraft.

5.1.3.3 Prediction Source

The prediction source is the same as that for the allocation. This prediction has not been updated as part of the PDR analysis.

5.1.4 Update Filter Performance

5.1.4.1 Line Item Definition

The EOS primary attitude determination software contains an attitude update filter (Kalman Filter) that estimates the orientation of the Spacecraft Control Coordinate Frame relative to the Earth Centered Inertial Frame of date. This estimate is based on data from one or two star trackers and three-axis gyros. These sensors, however, have inherent noise and bias error characteristics. Star trackers errors arise due to star color, calibration residuals, interpolation, quantization, lag, signal, background, and dark current shot noise, detector readout noise, and video amplifier noise, and star tracker dynamics. Gyros have errors due to quantization, scale factor, gyro bias, rate noise, random walk noise, alignment errors, and gyro dynamics. Additionally, the computer used to estimate the attitude has associated quantization and lag errors, the attitude propagation algorithm based on gyro outputs is not mathematically perfect, and a relative alignment error may exist between the two star trackers. Also, objects such as the moon may block the field of view of the star trackers for a significant period of time which further increases attitude propagation errors. All these errors contribute to the update filter error. This error contributes to pointing knowledge, pointing accuracy and pointing jitter/stability.

5.1.4.2 Allocation Rationale

These allocations (knowledge, accuracy, and jitter/stability) were taken from an EOS-AM specific performance estimate, with margin added, Reference 1. Margin is required due to the preliminary nature of the relationship between GE and the star tracker vendor.

5.1.4.3 Prediction Source

Revised update filter predictions have been made for Revision A of this document. The revised estimates for pointing knowledge and accuracy are based on results of covariance analysis as

documented in Reference 2. Revised estimates for pointing stability and jitter were taken from simulation runs as documented in Reference 3. All updates were based on cases in which one star tracker was assumed to have failed, the Fine Sun Sensor was not available and moon interference occurred in the orbit.

5.1.5 Star Position Accuracy

5.1.5.1 Line Item Definition

This line item includes all other dynamic star position errors that are not tracked by the Kalman filter and not included in the Update Filter simulation. In other words, the Kalman filter will pass these errors through as though they were actual spacecraft rotations. Slow and low spatial frequency thermal effects, star color effects, and CTE intensity dependence errors are included.

5.1.5.2 Allocation Rationale

The allocations for pointing knowledge and pointing accuracy are derived from the Solid State Star Tracker Performance Specification. The specification includes a requirement for reported star position accuracy. Because the frequency content of this error is not specified it is prudent to assume that some of this error is tracked by the Kalman filter. It was assumed that 25% of the star position accuracy error is passed through the filter.

The allocations for jitter/stability assume that 25% of the passed error occurs within the 420 second period of interest and essentially none during the 9 or 1.8 second interval.

5.1.5.3 Prediction Source

The prediction for knowledge is derived from the Ball Solid State Star Tracker Proposal and is documented in Reference 4. The source of the passed error is star color shift.

It is believed that an insignificant amount of this error is actually translated into spacecraft motion during any 420 second time period.

This prediction has not been updated as part of the PDR analysis.

5.2 Attitude Control Error

Category Definition – The Spacecraft attitude control algorithm generates torque commands for the reaction wheels in order to align the Spacecraft Control Coordinate Frame with the Orbital Reference Coordinate Frame at each orbit point based on attitude determination, ephemeris inputs and a desired target frame. The attitude control system, however, cannot align these frames perfectly.

Line Item Definitions and Allocations – The attitude control pointing error category contains several line items. These line items include control system performance errors, housekeeping disturbance errors, and instrument errors. The line items were selected based on what will be included in the simulation to simplify verification.

5.2.1 Control System Performance

5.2.1.1 Line Item Definition

Control system performance errors include those pointing errors induced by attitude control system software and hardware limitations. These errors include: wheel torque least significant bit, wheel speed zero crossings, wheel viscous friction, magnetic torque feedforward uncertainty, gyroscopic torque feedforward uncertainty, low frequency flexible dynamics, and environmental disturbances. All these error sources are included in the attitude control system simulation which is used to perform an analytical verification of the control system's performance capability.

Wheel Torque Least Significant Bit – The attitude control algorithm calculates desired torques to be provided the reaction wheels. However, software limits the resolution of these torque commands. Therefore, the desired torque is not exactly commanded or applied and a corresponding pointing error results. Simulation and flight experience indicate that these errors are significantly reduced if a saw tooth type dither torque with a peak amplitude less than the LSB is superimposed on the torque commands. This methodology is included in the baseline EOS control algorithm.

Wheel Speed Zero Crossings – Two potential errors exist when a reaction wheel speed crosses zero i.e., goes from positive to negative or vice-versa. First, the static or coulomb wheel friction has constant magnitude but assumes the same sign as the wheel speed. Therefore, as the wheel speed crosses zero the sign of the coulomb friction also changes. Even without knowledge of the zero crossing, the control system would eventually figure out that the sign changed, and accommodate. However, the spacecraft's attitude in the interim undergoes a small transient. The EOS control system, by monitoring the wheel speeds, commands a reaction wheel torque equal and opposite to the torque induced by the change in coulomb friction to reduce this transient. This feedforward, however, is not perfect. Errors arise because software limits the resolution of the wheel speed data, because computer delays may inhibit the application of the feedforward precisely when the wheel crosses zero speed, and because the magnitude of the coulomb friction, although verified via test on each wheel, is only known to within some tolerance. The second error that can arise when a wheel crosses zero speed is stiction. Stiction only occurs if the wheel speed and the torque (change in speed) of the wheel are below certain thresholds. If this is the case, the wheel will get stuck when it crosses zero speed and will not spin again until the torque exceeds the stiction torque. This is similar to a wooden block which will not slide along a table until a force which exceeds a certain magnitude is applied. The EOS control system, by monitoring wheel speed, attempts to always keep the wheel torque above the stiction torque threshold thereby eliminating any possibility of stiction. GE has developed several techniques to counteract this phenomenon and one design has flown on the DMSP and TIROS spacecraft. A torque is applied to the spacecraft to prevent stiction but this disturbance results in an attitude error that is significantly less than if the wheel were allowed to stick.

Wheel Viscous Friction – Wheel friction generally has two components. The first component, static or coulomb friction was discussed in the preceding section. The second component, viscous friction, changes as some non-linear function of wheel speed and usually the first and second order terms dominate the fourier expansion. Thus, as the wheel speeds change the viscous friction changes and, if uncompensated, a pointing error is induced. For EOS, the wheels speeds tend to cycle at orbit rate, therefore, uncompensated viscous friction induces a sinusoidal disturbance torque at orbit rate which results in a corresponding cyclic pointing error.

Magnetic Torquer Feedforward Uncertainty – The magnetic torque rods (roll, pitch, and yaw) are used to unload reaction wheel momentum which builds up due to environmental disturbance torques that act on the spacecraft. The magnetic momentum unloading algorithm calculates the appropriate dipole strengths based on reaction wheel speeds and knowledge of the magnitude and direction of the earth's geomagnetic field. The dipoles interact with the geomagnetic field to produce a torque perpendicular to the geomagnetic field and generally in the opposite direction of the wheel momentum vector. Knowledge of this torque is provided to the attitude control system so that the reaction wheels can provide an equal and opposite torque to eliminate any disturbance and the corresponding attitude error. This knowledge, however, is not perfect because the geomagnetic field sensing device is not perfect and the magnetic torquers do not necessarily provide the exactly commanded dipole.

Gyroscopic Torque Feedforward Uncertainty – Frequently, the term zero–momentum is used when discussing low earth orbiting spacecraft. Zero momentum refers to the system momentum which is defined as:

$$\mathbf{h}_{system} = \mathbf{h}_{core} + \mathbf{h}_{array} + \mathbf{h}_{wheel}$$

Here, the three terms on the right side of the equation represent the core momentum, the array momentum and the wheel momentum. A gyroscopic torque acts on the spacecraft and is defined as:

$$\mathbf{T}_{gyro} = \mathbf{w} \times \mathbf{h}_{system}$$

Here, **w** is the spacecraft's angular velocity vector (generally the pitch axis). Thus, if the roll and yaw components of the system momentum are not zero, then a gyroscopic torque will act on the spacecraft. The EOS control algorithm estimates the gyroscopic torque and generates a reaction wheel torque command equal and opposite to the gyroscopic torque to eliminate any disturbances and the corresponding attitude error. Unfortunately, this estimate is not perfect due to wheel speed resolution, uncertainty of the exact core products of inertia, solar array center of mass location uncertainty, and errors in the prediction of the angular velocity. For the EOS spacecraft, the wheel momentum is the major contributor to the roll and yaw system momentum.

Flexible Dynamics – Attitude errors arise due to flexible dynamics of the spacecraft's appendages. These appendages will flex at certain frequencies as the Spacecraft points at the Earth, and this flexing is stabilized via appropriate selection of the attitude control system filter and controller parameters. This line item includes those errors due to flexible dynamics which occur at low frequencies (high gain antenna and solar array). The structural dynamics category includes errors due to flexible dynamics that occur outside the bandwidth of the attitude control system. These lower frequency effects are typically included in an attitude control system simulation whereas higher frequency effects well beyond the controller's bandwidth are typically addressed by an independent jitter simulation.

Environmental Disturbances – The dominant environmental torques include those due to the atmosphere, due to earth's gravitation field, due to solar pressure, and due to the geomagnetic field. The atmosphere exerts a force on the spacecraft which is a function of the exposed atmospheric area of the spacecraft, the velocity of the spacecraft relative to the atmosphere, the atmospheric density, and the surface properties of the exposed area. The earth's gravitational field exerts a force on the spacecraft due to the variation in the gravitational force over the non–symmetrical spacecraft. The radiation from the sun exerts a force on the spacecraft which depends upon the intensity and spectral

distribution of the incident radiation, the orientation of the spacecraft relative to the sun, and the optical properties of the exposed surfaces. The geomagnetic field interacts with the spacecraft's residual magnetic dipole to produce a torque on the spacecraft. These disturbances generally occur at low frequency, once or twice orbit rate, and the amplitude of the cyclic attitude error depends upon the disturbance rejection capability of the attitude control system.

5.2.1.2 Allocation Rationale

The attitude control system error line item allocation was taken from an EOS-AM-specific estimate with margin added, Reference 5. This line item is assigned a "B" status.

5.2.1.3 Prediction Source

The attitude control system error category prediction for pointing accuracy, with no margin added, was taken from the EOS-AM-specific estimate found in Reference 6 and was based on simulation runs using the normal mode controller documented in Reference 7. The attitude control system error category predictions for jitter and stability were taken from the EOS-AM-specific estimate using a sliding window can also be found in Reference 6. These results are still considered preliminary and will be updated when Attitude Control design work is completed for the GN&C CDR.

5.2.2 Housekeeping Disturbance Errors

5.2.2.1 Line Item Definition

Housekeeping disturbance errors include those pointing errors induced by motion of Spacecraft housekeeping equipment excluding the reaction wheel zero-crossings, torque rod, solar array, and high gain antenna errors included under control system performance. Housekeeping disturbance errors include: high gain antenna slewing and tracking, solar array rotation, solar array thermal snap, reaction wheel imbalances and noise, the motion of fluid within the thermal control subsystem mini-loops, and the motion of propellant within the tanks. RF transmissions, an external disturbance, are assumed to be negligible.

High Gain Antenna - The high gain antenna induces a torque on the spacecraft as it searches and locks onto a TDRSS in order to establish S-band, K-band communications links or navigation contacts. The disturbance is largest during antenna slews which occur when the high gain antenna must switch from TDRSS East to TDRSS west or when the antenna reaches a physical azimuth or elevation constraint. The characteristics of this disturbance depend upon the inertia of the antenna, the desired slew rates, the specifics of the high gain antenna control loop design, the TDRSS-to-Spacecraft geometry and the gimbal azimuth and elevation ranges.

Solar Array Rotation - The solar array will induce a disturbance on the spacecraft as it attempts to rotate in order to track the sun. The largest error will occur as speed changes are required to adjust the array rotation rate to minimize solar incidence angles.

Solar Array Thermal Snap - Flight experience has indicated that some spacecraft undergo an attitude transient as the spacecraft enters or exits eclipse. This error results due to a thermal bending of the solar array induced by time-varying temperature gradients across the solar array boom and panels. The characteristics of this disturbance depend upon the thermal expansion characteristics

of the solar array structural elements, upon the inertia of the solar array, upon the fixed-based flex frequencies of the solar array, and upon the spacecraft-sun geometry.

Reaction Wheel Imbalance / Noise – Most of the reaction wheel induced disturbances were included within the control system performance line item. This error source is included separately, however, because it occurs outside the bandwidth of the controller. As the reaction wheels spin, if the center of mass is offset from the spin axis (static imbalance) or if the wheel itself has products of inertia (dynamic imbalance), a disturbance will be induced at spin frequency. The static imbalance depends upon the physical location of the reaction wheels within the spacecraft.

Thermal Loop – Motion of fluid within the thermal control subsystem mini-loops will impart a disturbance torque on the spacecraft. The characteristics of this disturbance depend upon the plumbing and operational strategies for the loop and on the mass and acceleration of the fluid within the loop.

Propellant Sloshing – Motion of the propellant will induce a disturbance to the spacecraft and thereby effect the pointing. Propellant motion is induced by translational or angular acceleration of the spacecraft which results from several sources. Flight experience has shown that pointing errors induced by propellant sloshing for low earth orbiting spacecraft is small during science mode operations.

5.2.2.2 Allocation Rationale

The housekeeping disturbance allocations for pointing knowledge and accuracy are assigned a "B" status because further analysis with more detailed FEMs is required to justify the allocations. The allocations for jitter/stability are assigned a "C" status as continued study is required to fully assess HGA and Solar Array disturbances.

The allocations for jitter and stability are based on EOS-AM estimates with margin added. Reference 8. The referenced report documents the following modifications to the analyses contained in Reference 9: 1) The HGA slew disturbance response assumes 90% effective feedforward. 2) The solar array thermal snap disturbance response assumes the array will perform 90% better than the Solar Array Flight Experiment (SAFE) array documented in Reference 8. The EOS-AM solar array specification requires the impulse due to solar array thermal snap to be limited such that the spacecraft response is in line with the assumption of a 90% improvement over SAFE.

The allocation for pointing accuracy is based on the results of Reference 8, with margin added. The same modifications to Reference 9 apply here as did for jitter/stability.

5.2.2.3 Prediction Source

The PDR update to the housekeeping disturbance predictions for jitter and stability are based on analysis results supplied in Reference 10 and based on analysis documented in Reference 11 and 12. The HGA slew analysis performed utilized the HGA Feedforward controller as documented in Reference 13. The housekeeping disturbance prediction for pointing accuracy is based on one half of the result given therein.

5.2.3 Instrument Disturbance Errors

5.2.3.1 Line Item Definition

Instruments will induce torques on the spacecraft due to motions within the instrument required to meet the mission's science objectives. Instrument motions fall into two classifications: repetitive

and aperiodic. Some instruments will institute a scanning pattern, generally along-track or cross-track, to map a target area on the Earth or in space and repeat the scanning pattern each orbit or after some number of orbits. Other instruments will utilize coolers that impart a repetitive linear force due to piston motion. The disturbance due to these compensated or uncompensated linear forces depends upon the location of the instrument with respect to the Spacecraft's center of mass. Some instruments may rotate at essentially a constant rate continuously and impart a disturbance to the spacecraft due to static and dynamic imbalances. Aperiodic disturbances will occur as instruments deploy required science support equipment, or as instruments perform calibrations, or as instruments slew to re-acquire their desired targets, or as instruments deploy and/or retract protective shields. Obviously the characteristics of both the repetitive and aperiodic instrument disturbances are a complex function of several parameters including the instrument's science objectives, operating scenario, inertia, scan or slew rates, compensation strategy, calibration requirements, and so on.

5.2.3.2 Allocation Rationale

The instrument disturbance allocations for pointing knowledge and pointing accuracy are assigned a "B" status because further analysis is required to justify the allocations due to the preliminary nature of the finite element models models used. The allocations for jitter/stability are assigned a "C" status as current predictions slightly exceed the allocations in some cases.

The jitter and stability allocations are based on an EOS-AM estimate, Reference 9. The following modifications to the referenced analysis were made to establish the allocations for 1.8, 9 and 420 seconds: 1) A 30% challenge was placed on the response to the SWIR re-pointing disturbance. 2) A 20% challenge was placed on the previous allocation for MODIS disturbance response. and 3) A 20% challenge has been placed on the response to Stirling cycle cooler disturbances.

The challenges placed on instrument disturbances have been issued to "knock down the long poles" and meet the overall instrument boresight jitter/stability requirements. The instrument disturbances, as they currently stand without the challenges, exceed the disturbance requirements of the GIIS. When the challenges presented above are met, the associated disturbance inputs should be noted in the UIID as applicable. These allocations are consistent with both the UIID boresight requirement for each instrument and the current predictions.

The pointing accuracy allocation is based on an EOS-AM-specific estimate, Reference 9, divided by two, with some margin added.

5.2.3.3 Prediction Source

The PDR updates for jitter and stability predictions are based on an EOS-AM-specific estimate found in Reference 10. Reference 14 details the Stirling Cycle Cooler jitter responses, which are contained in summary form in Reference 10. The pointing accuracy prediction is based on one half of the EOS-AM-specific estimate found in Reference 10.

5.3 Ephemeris Error

5.3.1 Category Definition

Various techniques exist to determine the position and velocity of a point within the body of the spacecraft in some inertial frame as a function of time. Some spacecraft utilize ground processing

to determine this ephemeris information and then uplink it to the spacecraft at some interval. Other spacecraft, like EOS, that require a more precise determination, perform on-board real-time navigation. Once the position and velocity of the spacecraft is determined, the Orbital Reference Coordinate Frame can be defined for that specific point in the orbit (see explanation in Reference 15). Errors in the determination of the position and velocity of the spacecraft result in an incorrect determination of the target pointing frame for that point in the orbit. Incorrect knowledge of the target pointing frame results in a pointing error.

An update or correction to the estimate of position or velocity will result in a change to the target pointing frame. As a result the controller will command a spacecraft rotation adding to spacecraft stability motions.

5.3.2 Allocation Rationale

Figure 6 shows, in a simplified form, the 4.4 arc-sec pitch-axis pointing knowledge error at the Navigation Base Reference relative to the Orbital Reference Coordinate Frame induced by a 150 meter along-track orbit position knowledge error.

The pitch-axis pointing knowledge error at the Navigation Base Reference relative to the Orbital Reference Coordinate Frame (ORCF) is the angle between the desired and estimated z-axes of the ORCF at the actual orbit point. Therefore, a 150 meter along track orbit position knowledge error

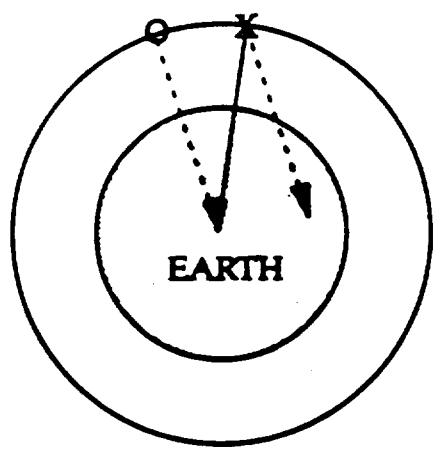

"X"	-	indicates the actual along-track orbit position
"O"	-	indicates the estimated along-track orbit position
- - - - ►	-	indicates the estimated z-axis of the ORCF for actual point in orbit
——►	-	indicates the desired z-axis of the ORCF for actual point in the orbit

Figure 6. Pointing Error Induced By Ephemeris Error

corresponds to approximately a 4.4 arc-sec pitch-axis pointing knowledge error at the NBR. The same applies to the roll error.

The yaw error results from cross-track velocity errors. The 4.4 arc-second yaw error results from 0.16 m/s cross-track velocity error.

The ephemeris allocations are based on the expected performance using the TONS navigations system.

These allocations have been justified via EOS-AM specific analysis detailed in References 16 and 17.

5.3.3 Prediction Source

The PDR updates to the ephemeris error prediction are based on the most recent TONS algorithms as documented in Reference 18. Accuracy and stability/jitter estimates are provided in References 16 and 17. The predictions represent typical performance assuming a strong contact is missed.

5.4 Thermal Distortion Errors

Category Definition - Materials distort due to thermal gradients. These thermal distortions will possess both long- and short-term varying components. The long-term varying components arise due to the change in temperature of the structural elements over the life of the spacecraft. Long-term variations include material properties and sun beta angles (sun declination, orbit right ascension, orbit inclination, as well as solar distance). The short-term varying components arise due to the changes in temperature of materials throughout each orbit. EOS is eclipsed for approximately one third of each orbit and equipment power profiles change throughout an orbit. Figure 7 shows the geometry for a typical sun synchronous orbit to illustrate sun-orbit plane geometry. For EOS the nominal angle between the sun and the orbit plane is 22.5 degree (10:30 AM ascending node) but this angle will vary for the reasons identified above.

5.4.1 Star Tracker Mounts Thermal Distortion

5.4.1.1 Line Item Definition

The star tracker mounts to the Navigation Base Plate will undergo thermal distortion. The star tracker will essentially rotate relative to the Navigation Base Plate. This motion changes the transformation from the star tracker boresight to the Navigation Base Reference. This motion will have both a static and dynamic term depending upon the nature of the gradients across the mounts.

5.4.1.2 Allocation Rationale

The allocations are based on those given in Reference 19. These allocations should be incorporated int e preliminary design as derived requirements on the star tracker mount. All allocations are ass .ed a "C" status until EOS-AM modifications and subsequent analyses are completed.

5.4.1.3 Prediction Source

The PDR updated static pointing error predictions are taken from Reference 20, and is computed as the orbit average distortion relative to the ground ambient condition shape. The preliminary

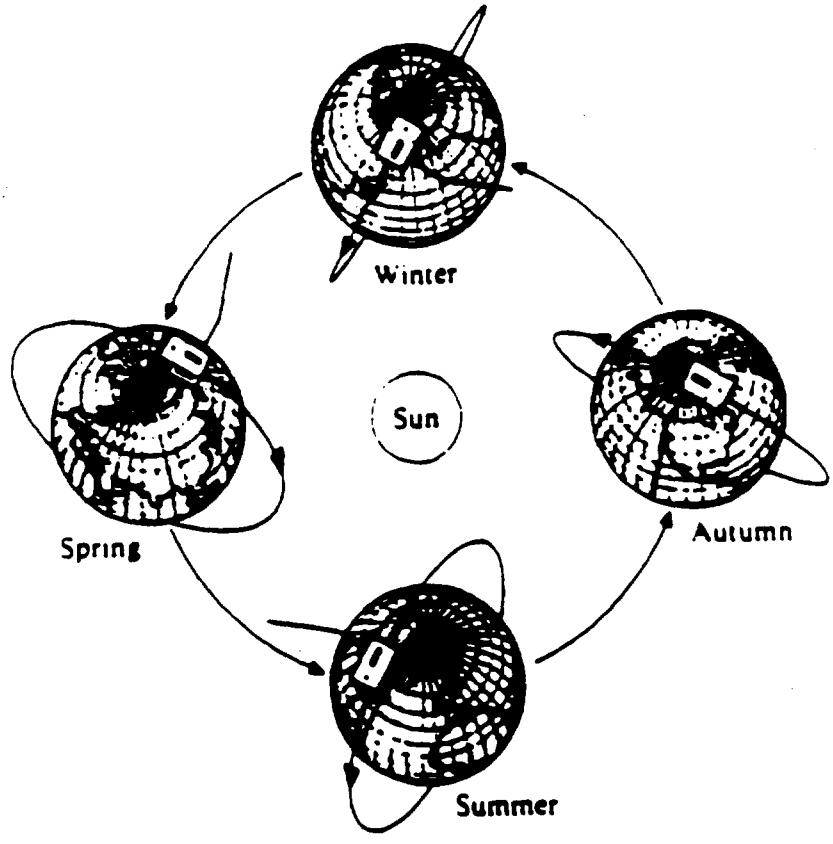

Figure 7. A Sun-Synchronous Orbit

results of this analysis indicate that the predictions far exceed the allocation. Further design and analysis relative to the star tracker mount are on-going. The dynamic pointing error predictions are derived by differencing the orbit average distortion with the peak distortion.

5.4.2 Navigation Base Plate Thermal Distortion

5.4.2.1 Line Item Definition

The Guidance Navigation and Control (GN&C) Sensor Equipment Module (EM) houses most of the GN&C subsystem equipment including the star trackers and the inertial reference unit. These attitude sensors are mounted to the Navigation Base Plate portion of the EM's structure. The Navigation Base Plate will experience thermal distortions. This plate bends due to temperature gradients from face to face or from edge to edge. This motion changes the transformation from the star tracker boresight to the Navigation Base Reference. This motion will have both a static and dynamic term depending upon the nature of the temperature gradients across the plate.

5.4.2.2 Allocation Rationale

The allocations are based on an EOS-AM specific worst-case analysis given in Reference 21. Worst-case temperature deltas were assumed. The star tracker and Navigation Base Reference were assumed to be in the worst-case locations on the Navigation Base Plate when calculating the error on each axis. Because the FEM and the thermal model used in this analysis are preliminary and less detailed than desired, the estimates were multiplied by roughly a factor of five to establish the static pointing error allocations. The dynamic pointing error allocation is derived by dividing the static pointing error allocation by four. Although this is considered conservative, the static and dynamic line items receive a "B" status until more detailed analyses are performed.

5.4.2.3 Prediction Source

The PDR static pointing error prediction is taken as the orbit average distortion from the preliminary estimates contained in Reference 20. The dynamic pointing error predictions are derived by differencing the orbit average distortion with the peak distortion.

5.4.3 Navigation Base Plate Mounts Thermal Distortion

5.4.3.1 Line Item Definition

The Navigation Base Plate kinematic mounts that insert into Navigation Port of the Spacecraft structure will experience thermal distortions. These mounts bend due to temperature gradients across the mounts. This bending of the mounts results in a rotation of the Navigation Base Plate. This rotation of the plate changes the orientation of the star tracker boresight relative to instruments mounted on the Spacecraft. This motion will have both a static and dynamic term depending upon the nature of the temperature gradients across the Navigation Base Plate mounts.

5.4.3.2 Allocation Rationale

The static pointing error terms are derived from EOS-A1 analyses which will need to be updated. These errors were included in the EOS-A1 analysis provided in Reference 22. The dynamic pointing error allocations are derived by dividing the static allocations by ten.

5.4.3.3 Prediction Source

The PDR updated static pointing error prediction is taken as the orbit average distortion from the data supplied in Reference 20. The dynamic pointing error predictions are derived by differencing the orbit average distortion with the peak distortion.

5.4.4 Spacecraft Structure Thermal Distortion

5.4.4.1 Line Item Definition

The Spacecraft structure will experience thermal distortions. The structural elements bend due to temperature gradients across each element. This bending of structural elements changes the

orientation of the instruments relative to the star tracker. This motion will have both a static and dynamic term depending upon the nature of the temperature gradients across the structural elements. Spacecraft structure thermal distortion is also included in the pointing jitter and stability budgets.

5.4.4.2 Allocation Rationale

The static and dynamic allocations are based on the previous EOS-AM-specific analysis, Reference 23. The static allocation has been reduced below the analysis result thereby presenting a design challenge. This was done in order to maintain an appropriate amount of system level margin for this stage in the program. Therefore the static error is given a "C" status, and the dynamic portion of the error is given a "B" status.

5.4.4.3 Prediction Source

The PDR updated static pointing error prediction is taken as the orbit average distortion from the preliminary estimates contained in Reference 20. The dynamic pointing error predictions are derived by differencing the orbit average distortion with the peak distortion.

5.4.5 Instrument Mounting Plate Thermal Distortion

5.4.5.1 Line Item Definition

Some instruments mount to Instrument Mounting Plates (IMPs). These IMPs will experience thermal distortions. The IMPs bend due to temperature gradients from face to face or from edge to edge. This motion changes the orientation of an instrument mounted on an IMP relative to the star tracker. This motion will have both a static and dynamic term depending upon the nature of the temperature gradients across the plate.

5.4.5.2 Allocation Rationale

The allocation for the static term is derived from an EOS-AM-specific worst-case analysis presented in Reference 21. That analysis was performed to account for the material properties (coefficient of thermal expansion) and dimensions associated with the EOS-AM Payload Mounting Plates. Worst-case temperature deltas of 5 degrees Celsius across the plate and 3 degrees Celsius through the plate were assumed. The instruments were assumed to be in the worst-case locations on the plate when calculating the error for each axis. The pointing errors calculated using these multiple worst-case assumptions are assigned as the allocations. The allocation for the dynamic pointing error is assumed to be 10% of the static pointing error. Although the analysis was conservative, it receives a "B" status because of the preliminary nature of the models used. Note: these distortions do not exist for instruments mounted directly to the structure.

5.4.5.3 Prediction Source

The PDR updated static pointing error prediction is taken as the orbit average distortion from the preliminary estimates contained in Reference 20. The dynamic pointing error predictions are derived by differencing the orbit average distortion with the peak distortion.

5.4.6 Instrument Kinematic Mounts Thermal Distortion

5.4.6.1 Line Item Definition

The instrument kinematic mounts that insert into node fittings of the Spacecraft structure will experience thermal distortions. These mounts bend due to temperature gradients across the mounts. This bending of the mounts results in a rotation of the instrument mounting plate. This rotation of the instrument changes the orientation of the instruments mounted on the Spacecraft relative to the star tracker boresight. This motion will have both a static and dynamic term depending upon the nature of the temperature gradients across the instrument mounts.

5.4.6.2 Allocation Rationale

The static pointing error terms are derived from EOS-A1 analyses which will need to be updated. These errors were included in the EOS-A1 analysis provided in Reference 22. The dynamic pointing error allocations are derived by dividing the static allocations by ten. These allocations are given a "C" status because the current estimate exceeds the allocation.

5.4.6.3 Prediction Source

Predictions for kinematic mount static and dynamic thermal distortions are included in the results for the Navigation Base Plate and the Instrument Mounting Plates as appropriate. The predictions used for the PDR update are taken from Reference 20.

5.5 Structural Dynamics Errors

Category Definition - All the Spacecraft's structural components possess flexible frequency characteristics. The frequencies associated with these structural elements are well beyond the achievable bandwidth of the attitude control system. This means that the attitude control system will not attempt to reorient the spacecraft to accommodate for these high frequency vibrations. These structural vibrations contribute to the dynamic portion of the pointing knowledge budget. Structural dynamics errors are included in the disturbance response categories within the pointing accuracy and jitter/stability allocations.

5.5.1 Spacecraft Structure Dynamics

5.5.1.1 Line Item Definition

The Spacecraft structure has associated flexible frequency characteristics that will be excited by various disturbances. This high frequency motion of the Spacecraft structure will change the orientation of instruments relative to the star tracker boresight.

5.5.1.2 Allocation Rationale

The allocation is based on the EOS-AM jitter analysis 1000 second stability estimate divided by two. This analysis is documented in Reference 9. The allocation is assigned a "B" status because it

requires more detailed analysis to determine whether the baseline EOS-AM spacecraft structure design supports the allocation.

5.5.1.3 Prediction Source

PDR updates for this line item are derived by taking the Root Sum Square of the instrument and internal disturbances at 420 seconds, for the worst case Spacecraft-to-instrument interface, and dividing by two. Predictions of instrument and internal disturbances are taken from Reference 10.

5.5.2 Attitude Sensor and Navigation Base Plate Structure Dynamics

The star tracker, the Inertial Reference Unit, and the Navigation Base Plate all will also have associated flexible frequency characteristics. The high frequency vibrations of these items will effect the attitude determination system's attitude estimate. However, the Kalman filter smooths these high frequency vibrations and the attitude and rate filters filter these high frequency vibrations. These errors are expected to be quite small and are accounted for in the attitude determination error category update filter performance line item.

5.6 Moisture Distortion Errors

Category Definition - Certain space materials absorb water when on the Earth. When the materials enter the space environment this absorbed water evaporates and the material volume changes. This change in material volume is characterized for each material by a coefficient of moisture expansion (CME). The change in volume results in a bending of the material. This bending of materials results in pointing errors. Other chemical products besides water may also be outgassed and result in material volume changes, material bending, and pointing errors. Moisture distortion errors are considered to be a static errors because the outgassing period is generally long (typically on the order of months). Outgassing should cease at some time during spacecraft or Instrument system checkout prior to entry into the Spacecraft-level Science Operating Mode.

5.6.1 Navigation Base Plate Moisture Distortion

5.6.1.1 Line Item Definition

The Navigation Base Plate will experience moisture distortion due evaporation of water vapor and outgassing once it enters the space environment. This outgassing will change the volume of the materials that comprise the plate in accordance with the coefficient of moisture expansion. The change in volume bends the plate. This bending changes the transformation from the star tracker boresight to the Navigation Base Reference.

5.6.1.2 Allocation Rationale

Because of the symmetric nature of the Gr/Ep face sheet lay-ups of these plates, the analytical prediction is zero, Reference 24. However in reality some distortion will occur due to non-uniformity of the material and due to effects associated with equipment mounted on the plate. The allocation of 4 arc-seconds originated from an agreement between GE and GSFC and was documented in Reference 19. The allocation is assigned a "B" status.

5.6.1.3 Prediction Source

PDR updates to the navigation base plate moisture distortion are taken from Reference 20.

5.6.2 Spacecraft Structure Moisture Distortion

5.6.2.1 Line Item Definition

The Spacecraft structure will experience moisture distortion due evaporation of water vapor and outgassing once it enters the space environment. This outgassing will change the volume of the materials that comprise the Spacecraft structure in accordance with the associated coefficients of moisture expansion. The change in volume bends the structural elements. This bending changes the instruments relative to the star tracker boresight.

5.6.2.2 Allocation Rationale

This effect results from the loss of material volume due to the outgassing of water that was absorbed by the material during fabrication, assembly and testing. Typically a maximum saturation of 1% of the mass of the component is observed. This analysis was performed using the same FEM that was used for the thermal distortion analysis and documented in Reference 24. The main difference is in substituting the CTE with the Coefficient of Moisture Expansion (CME) and inputting a strain/percent of mass gain in place of a temperature profile. The values used for the CME and the moisture gain percent were based on actual test data from the UARS program. The distortions are relative between a plane defined by the kinematic mount ports for any instrument and a similar plane for the navigation base reference.

These allocations are assigned a "C" status because the current predictions exceed the allocations.

5.6.2.3 Prediction Source

The prediction was derived from the results provided in Reference 20. The analysis concluded that the large roll distortion is due to excessive shrinkage of bulkhead 7 at the 3–axis Kinematic Mount location, which causes the large roll distortion at MODIS.

5.6.3 IMP Moisture Distortion

5.6.3.1 Line Item Definition

The Instrument Mounting Plate will experience moisture distortion due to evaporation of water vapor and outgassing once it enters the space environment. This outgassing will change the volume of the materials that comprise the plate in accordance with the coefficient of moisture expansion. The change in volume bends the plate. This bending changes the orientation of the instruments mounted on the plate relative to the star tracker boresight.

5.6.3.2 Allocation Rationale

Because of the symmetric nature of the Gr/Ep face sheet lay–ups of these plates, the analytical prediction is zero, Reference 24. However in reality some distortion will occur due to

non-uniformity of the material and due to effects associated with equipment mounted on the plate. The allocation assumed originated from an agreement between GE and GSFC and was documented in Reference 19. The allocation is assigned a "C" status.

5.6.3.3 Prediction Source

Updated PDR predictions for IMP moisture distortion are taken from Reference 20. The analysis concluded that excessive shrinkage of the Propulsion Module base plate causes the large distortion shown in the pitch axis at CERES.

5.7 Measurement Errors

Category Definition - Two types of measurement errors are included in this category. The first type accounts for the error in determining the orientation of one optical cube (1 arc-sec cubes) relative to another. Here, errors may arise due to optical cube non-orthogonalities, theodolite accuracies, operator errors, and mirror errors. The number of times that one cube must be measured relative to another cube depends upon the implementation of the alignment procedure. Section 4.0 outlines the alignment procedure for both IMP-mounted and direct-mounted instruments and indicates the measurements required for each procedure. The second type of measurement error accounts for the error in determining the orientation of the boresight of an item (a star tracker or an instrument) relative to the optical cube that resides on the item. The magnitude of this error depends upon the method used. This error category is static.

5.7.1 Star Tracker Alignment Knowledge

This line item was renamed. It had been called Star Tracker Boresight Measurement Error.

5.7.1.1 Line Item Definition

The 1 arc-sec optical cube that resides on the star tracker is not perfectly aligned relative to the boresight axes of the star tracker. The star tracker vendor, however, via some type of calibration scheme, determines the orientation of the star tracker cube relative to the boresight axes to within some tolerance. Errors in the knowledge of the euler angles for this transformation result in uncertainties in the transformation between the star tracker boresight and the Navigation Base Reference.

5.7.1.2 Allocation Rationale

The allocation is based on the EOS-AM Star Tracker specification. This allocation should be incorporated into the preliminary design as a derived requirement on the star tracker. The allocation is assigned an "C" status because the current vendor estimate indicates the allocation will not be met.

5.7.1.3 Prediction Source

The star tracker boresight measurement error prediction is based on the Ball proposal for the EOS-AM Solid State Star Tracker.

5.7.2 Star Tracker to NBR Cube

5.7.2.1 Line Item Definition

Measurement errors occur when measuring the orientation of one optical cube relative to another. These errors depend upon the cube non-orthogonalities, theodolite accuracy, operator error, and

mirror error. It takes four theodolite usages to determine the orientation of one cube relative to another. This line item accounts for the errors when measuring the Star Tracker Cube relative to the Navigation Base Reference cube.

5.7.2.2 Allocation Rationale

The allocation results from similarity to DMSP, Landsat, TIROS, and UARS allocations. The allocation assumes that all optical cubes are accurate to within 1 arc-sec, that the theodolite is accurate to 1 arc-sec, that the operator error is 2 arc-sec, and that four theodolite usages are required. An additional 10 arc-sec per axis was added to account for the fact that the two cubes may not be nominally aligned. The allocation is assigned an "A" status due to extensive similarity relative to other spacecraft programs.

5.7.2.3 Prediction Source

The PDR update to the measurement error for Star Tracker Cube to Navigation Base Reference Cube has been increased from 5 to 7 arcseconds based on current assessments.

5.7.3 NBR Cube to MRC

5.7.3.1 Line Item Definition

Measurement errors occur when measuring the orientation of one optical cube relative to another. These errors depend upon the cube non-orthogonalities, theodolite accuracy, operator error, and mirror error. It takes four theodolite usages to determine the orientation of one cube relative to another. This line item accounts for the errors when measuring the Navigation Base Reference cube relative to the Master Reference Cube that resides at a TBD location on the -X end of the Spacecraft structure.

5.7.3.2 Allocation Rationale

The allocation rationale presented in Section 5.7.2.2 also applies to this line item. Only an additional 5 arc-seconds per axis was added as margin Each allocation represents the error associated with determining the orientation of one optical cube relative to another.

5.7.3.3 Prediction Source

The PDR update to the measurement error for NBR Cube to MRC has been increased from 5 to 7 arcseconds based on current assessments.

5.7.4 Instrument Alignment Cube to MRC

5.7.4.1 Line Item Definition

Measurement errors occur when measuring the orientation of one optical cube relative to another. These errors depend upon the cube non-orthogonalities, theodolite accuracy, operator error, and mirror error. It takes four theodolite usages to determine the orientation of one cube relative to

another. This line item accounts for the errors when measuring the Instrument Mounting Plate cube relative to the Master Reference Cube that resides at a TBD location on the Spacecraft structure.

5.7.4.2 Allocation Rationale

The allocation rationale presented in Section 5.7.2.2 also applies to this line item. Only an additional 5 arc-seconds per axis was added as margin. Each allocation represents the error associated with determining the orientation of one optical cube relative to another.

5.7.4.3 Prediction Source

The PDR update to the measurement error for NBR Cube to MRC has been increased from 5 to 7 arcseconds based on current assessments.

5.8 Positioning Errors

Category Definition – Positioning errors represent the ability to absolutely align one optical cube relative to another optical cube or to absolutely align a boresight relative to an optical cube. Positioning errors arise due to manufacturing tolerances such as: the ability to make surfaces perfectly planar, the ability to drill holes to a desired depth, the ability to drill holes a desired distance apart, the ability to orient an optical cube on a surface at a desired orientation, and so on. Positioning errors due to manufacturing tolerances are typically reduced by the use of shims at certain mechanical interfaces. Shims, however, have an associated resolution that translates into a positioning error. The number of places that shims are used to eliminate manufacturing tolerances is a function of the alignment procedure and differs for IMP-mounted and direct-mounted instruments (Section 4.0). Positioning errors are static errors.

5.8.1 Manufacturing Assembly Fixture Clamp Release

5.8.1.1 Line Item Definition

This effect results from aligning the ports while the structure is clamped in the MAF which is nearly perfectly flat. The errors associated with this set-up are those resulting from clamping the structure down to secure it. The basis for this scenario is the UARS MAF on to which the Centerbody truss structure was clamped during the fabrication process. It is assumed that the alignment of pointing sensitive components is done while the structure is shimmed to the unclamped or stress-free shape and clamped to the MAF.

5.8.1.2 Allocation Rationale

The allocation is based on statistical analysis of UARS test data found in appendix B of Reference 24. The error in duplicating the stress-free structure on which to perform alignment is calculated by subtracting the re-clamped measurement from the unclamped measurement. The allocation is assigned an "B" status until EOS test data are available.

5.8.1.3 Prediction Source

The prediction is the same as the allocation. No PDR update to the prediction has been made.

5.8.2 Instrument Yaw Align and Shim Resolution

5.8.2.1 Line Item Definition

This error is due to the manufacturing tolerance when drilling the location of the kinematic mount ports on the primary structure and of the Instrument interfaces on the IMP's using the drill templates. This causes the IMP or the instrument itself to be rotated in the Yaw axis.

Pitch and roll errors result from the rotation of the 2 and 1 axis restraint kinematic mounts about their lower bearings due to misalignments between the carrier ports and the instrument ports resulting from the same manufacturing tolerance buildup. This arcing of the kinematic mount causes an up or down motion at the interface which results in a tilt of the instrument in the Pitch and Roll angles.

The minimum shim thickness assumed for this operation is 0.002 inches, thus giving tilt errors as large as 0.001 inches. The error is highly dependent on the distance between the kinematic mounts.

5.8.2.2 Allocation Rationale

The allocation is based on the RSS of two error sources, kinematic mount port location accuracy and the fourth point shim resolution effect. The analysis results used for the shim resolution error are given in Reference 24. The analysis previously used for the yaw alignment accuracy has been updated for this report as was the allocation which is based on the current prediction with some margin added. The allocation is assigned an "C" status because the prediction exceeds the allocation.

The allocation assigned represents the achievable, if desired, alignment capability. As significant margin exists in the accuracy budget, this allocation may be relaxed as part of the Structures & Mechanisms CDR.

5.8.2.3 Prediction Source

The 0.002 in. drilling tolerance for each mount could rotate the instrument 0.004 in. about the 18.3 in. shortest distance between kinematic mounts for the worst case instrument.

The yaw misalignment values used in the calculation of this error is .002 in. at either side of the interface (total of .004 in.). There is no yaw error introduced due to travel arc effect since the plate is prevented from swinging by the 2-axis restraint kinematic mount. This error is considered negligible.

The 0.001 in. shim thickness error for each mount could rotate the instrument 0.001 in. in pitch and roll about the 18.3 in. shortest distance between kinematic mounts for the worst case instrument.

No PDR update to the prediction has been made.

5.8.3 NBR Yaw Align and Shim Resolution

5.8.3.1 Line Item Definition

This error is due to the manufacturing tolerance when drilling the location of the kinematic mount ports on the primary structure using the drill templates. This causes the GN&C EM to be rotated in the Yaw axis.

Pitch and roll errors result from the rotation of the 2 and 1 axis restraint kinematic mounts about their lower bearings due to misalignments between the carrier ports and the GN&C EM ports resulting from the same manufacturing tolerance buildup. This arcing of the kinematic mount causes an up or down motion at the EM which results in a tilt of the EM in the Pitch and Roll angles.

The minimum shim resolution assumed for this operation is 0.002 inches, thus giving tilt errors as large as 0.001 inches. The error is highly dependent on the distance between the kinematic mounts.

5.8.3.2 Allocation Rationale

The allocation is based on the RSS of two error sources, kinematic mount port location accuracy and the fourth point shim resolution effect. The analysis results used for the shim resolution error are given in Reference 24. The analysis previously used for the yaw alignment accuracy has been updated for this report as was the allocation which is based on the current prediction with some margin added. The allocation is assigned an "B" status until EOS test data are available.

The allocation assigned represents the achievable, if desired, alignment capability. As significant margin exists in the accuracy budget, this allocation may be relaxed as part of the Structures & Mechanisms CDR.

5.8.3.3 Prediction Source

The 0.002 in. drilling tolerance for each mount could rotate the instrument 0.004 in. about the 28.5 in. shortest distance between kinematic mounts for the GN&C EM.

The yaw misalignment values used in the calculation of this error is .002 in. at either side of the interface (total of .004 in.). There is no yaw error introduced due to travel arc effect since the plate is prevented from swinging by the 2-axis restraint kinematic mount. This error is considered negligible.

The 0.001 in. shim thickness error for each mount could rotate the GN&C EM 0.001 in. in roll about 28.5 in. and 0.001 in. in pitch about the 62.5 in. distance between kinematic mounts for the GN&C EM.

No PDR update to the prediction has been made.

5.9 Gravity Errors

Category Definition – Gravity errors occur when measuring the orientation of one optical cube to another optical cube. When a mass is placed on a structure, gravity induces a force on the structure in accordance with Newton's laws. This force makes the structure bend. When the structure and the mass enter a micro-gravity space environment, gravity no longer induces a force on the structure. Therefore, in the space environment, the structure does not bend. The bending effects due to gravity are estimatable to within some tolerance.

5.9.1 Star Tracker to NBR Cube

5.9.1.1 Line Item Definition

When the star tracker is placed on the Navigation Base Plate, gravity induces a force which makes the plate bend in accordance with Newton's laws. If the plate is placed on a granite block, this

bending effect is reduced. When the GN&C Sensor EM enters the zero-gravity space environment, this bending ceases. An error occurs when measuring the star tracker cube relative to the Navigation Base Reference cube on the ground. This effects the knowledge of the transformation that relates the orientation of the star tracker boresight relative to the Navigation Base Reference.

5.9.1.2 Allocation Rationale

The allocation is derived from an EOS-AM-specific worst-case analysis Reference 21. The analysis accounted for the mass of the EOS star trackers and the structural properties of the Navigation Base Plate via a finite element model. This analysis assumed that the Navigation Base Plate is supported only by the Navigation Base Plate Mounts and assumes a worst-case star tracker mass. The analysis did not assume that the Navigation Base Plate would be placed on a granite block during this procedure (which would result in significantly lower errors). The analysis assumed that 50% of the gravity induced bending could be compensated based on analytical predictions. The allocation is assigned a "C" status as current predictions exceed the allocation.

5.9.1.3 Prediction Source

Reference 20 contains revised PDR analysis of gravity distortions. The predictions used assumed the worst case distortions for the Spacecraft in the -X configuration and tilted 5 degrees in a +/- direction toward the +/- Y and Z axes. The prediction was reduced by 75% to account for the assessed accuracy of analytic compensation of these effects.

5.9.2 Instrument Alignment Cube to NBR Cube

5.9.2.1 Line Item Definition

This distortion error results from the 1-g field acting on the mass of the primary structure and whatever items are mounted to it. When conducting an alignment verification measurement the spacecraft X axis is oriented parallel to gravity. The errors associated with this operation would be due to the inability to perfectly level the bus structure on the pad thus generating some distortions due to the resultant gravity vector in the lateral directions. For this analysis a 5 degree tilt is assumed. The characteristics of the structural bending also depend upon the loading of the structure. If the structure is fully loaded the gravity error is bigger and vice-versa. In the baseline alignment plan, the IAC is measured relative to the NBR cube when the Spacecraft structure is fully loaded with housekeeping equipment modules.

It must be noted that as was done in the UARS program, the initial geometric characterization of the primary structure performed during the primary structure manufacturing phase in the Manufacturing Assembly Fixture (MAF) will be the basis for eliminating the effects of primary structure induced gravity distortion errors throughout the alignment phase of the spacecraft. An initial mapping between the MRC and the various cubes throughout the primary structure will be generated in this facility for this use, when the primary structure is in its minimum supported mass configuration. It is important to note that the alignment phase for the Spacecraft takes place after the structure modal testing is complete. This modal testing and subsequent fine-tuning of the FEM allow for use of a 75% gravity error compensation value for EOS.

5.9.2.2 Allocation Rationale

The allocation is derived from an EOS-AM-specific worst-case analysis, Reference 23, which calculates the total gravity error due to measuring both the Navigation Base Reference Cube and the

Instrument Mounting cube relative to the MRC in a gravity environment. The analysis accounts for the mass of the housekeeping equipment modules and Instrument Mounting Plates and the properties of the Spacecraft structure via a finite element model. The analysis assumes a 50% gravity error analytical compensation. The allocation is assigned a "C" status.

5.9.2.3 Prediction Source

Reference 20 contains revised PDR analysis of gravity distortions. The predictions used assumed the worst case distortions for the Spacecraft in the -X configuration and tilted 5 degrees in a +/- direction toward the +/- Y and Z axes. The prediction was reduced by 75% to account for the assessed accuracy of analytic compensation of these effects.

5.9.3 IMP Bending

5.9.3.1 Line Item Definition

When an instrument is placed an Instrument Mounting Plate, gravity induces a force which makes the plate bend in accordance with Newton's laws. If the plate is placed on a granite block, this bending effect is reduced. When the Instrument Mounting Plate enters the zero-gravity space environment, this bending ceases. An error occurs when measuring the Instrument Alignment Cube on the ground. This effects the knowledge of the transformation that relates the orientation of the instrument boresight relative to the Navigation Base Reference.

5.9.3.2 Allocation Rationale

The allocation is derived from an EOS-AM-specific worst-case analysis Reference 21. The analysis accounted for the mass of the EOS plate mounted instruments and the structural properties of the Instrument Mounting Plates via a finite element model. This analysis assumed that the Instrument Mounting Plate is supported only by the Instrument Mounting Plate Mounts. The analysis did not assume that the Instrument Mounting Plate would be placed on a granite block during this procedure (which would result in significantly lower errors). The analysis assumed that 50% of the gravity induced bending could be compensated based on analytical predictions. The allocation is assigned a "B" status until a more detailed analysis is completed.

5.9.3.3 Prediction Source

Reference 20 contains revised PDR analysis of gravity distortions. The predictions used assumed the worst case distortions for the Spacecraft in the -X configuration and tilted 5 degrees in a +/- direction toward the +/- Y and Z axes. The prediction was reduced by 75% to account for the assessed accuracy of analytic compensation of these effects.

5.10 Launch Shift Errors

Category Definition - The environment induced by the launch vehicle during the launch/ascent mission phase results in launch shifts. These launch shifts can change the orientation of the star tracker boresight relative to the Navigation Base Reference and/or the orientation of the instruments relative to the star tracker.

5.10.1 Star Tracker Boresight Launch Shift

5.10.1.1 Line Item Definition

The star tracker boresight will shift internal to the star tracker relative to the mounts. This shift is induced by the launch vehicle during the launch/ascent mission phase. This changes the knowledge of the star tracker boresight relative to the NBR.

5.10.1.2 Allocation Rationale

The allocation is based on the EOS-AM Star Tracker specification requirements for alignment stability. This allocation should be incorporated into the preliminary design as a derived requirement on the star tracker. The allocation is assigned an "B" status because further analysis will be needed due to the preliminary nature of the star tracker development.

5.10.2 Star Tracker Mount Launch Shift

5.10.2.1 Line Item Definition

The star tracker mounts will experience launch shift during the launch/ascent mission phase. This launch shift changes the knowledge of the star tracker boresight relative to the Navigation Base Reference.

5.10.2.2 Allocation Rationale

The allocation is less than the 3σ point estimate derived from UARS and from DMSP star tracker pre- post-environment test data. Test results are included in Appendix D of Reference 24. The allocation is considered a challenge and should be incorporated as a derived requirement on the star tracker mounts. All precautions will be taken to avoid a mount configuration that is susceptible to launch shift. These precautions include pinning, machining brackets, and selecting appropriate materials. The allocation is assigned a "C" status.

5.10.2.3 Prediction Source

The PDR updated prediction is based on an assessment by Ball as to the shift expected.

5.10.3 Nav. Base Plate Kinematic Mount Launch Shift

5.10.3.1 Line Item Definition

The Navigation Base Plate will experience launch shift during the launch/ascent mission phase. This launch shift changes the orientation of the star tracker boresight relative to the instruments.

5.10.3.2 Allocation Rationale

The allocation is based on the RSS of the following error sources, spherical bearing liner compression, residual moment effect and preload relaxation. Estimates for these error sources are

given in Reference 24. Bearing linear compression errors account for deformation of the Teflon impregnated fabric used as a bearing liner in the spherical seat of the bearing. Preload relaxation accounts for preload losses due to material relaxation during launch. The residual moment effect accounts for shifts due to the actual preloading. The allocation is assigned a "B" status.

5.10.3.3 Prediction Source

Bearing Liner Compression – This error results from a permanent set in the 0.010 in. thick Teflon impregnated fabric used as bearing liner in the spherical seat of the bearing. It is assumed that a 10% deformation of this liner will occur as a result of environmental loading. This 0.001 in. play is to be taken as (+) in one end (–) in the other end of the plate in order to get the worst case tilt for errors in the pitch , roll and Yaw orientation. This effect considers both sides of the kinematic mount, the NBP side and the spacecraft side of the mounts where the one and two–axis restraint mounts use additional spherical bearings.

Residual Moment Effect – All kinematic mount spherical bearings are pre–loaded in order to eliminate clearance problems which would degrade the remate accuracy and which also would produce unwanted launch shifts. These pre–loads however causes the plate to bend slightly and therefore introduces a pitch and roll error. The bending moment used in this calculation is 25.0 in–lbs. (the maximum possible as supplied by bearing vendor) and it is applied at each corner of the plate in the plane of the diagonals to the plate corners. Resulting distortions were calculated using a preliminary GN&C Optical bench FEM, see Reference 21.

Preload Relaxation – A 10% loss of preload due to material relaxation before during and after launch was assumed for this analysis. This results in a 0.0003 increase in length of the mated mount assembly. Only one mount is assumed to change in length.

No PDR update to the prediction has been made.

5.10.4 Spacecraft Structure Launch Shift

5.10.4.1 Line Item Definition

The Spacecraft structure will experience launch shift during the launch/ascent mission phase. This launch shift changes the orientation of instruments relative to the star tracker boresight.

5.10.4.2 Allocation Rationale

This effect results from structural joints slippages and material hysteresis due to handling and environmental loads testing on the ground and to launch loads. The errors estimated in this analysis are based only on shifts in the bolted joints of the primary structure. Material hysteresis effects were not considered in this analysis since test experience dictates that this would be of minimal effect. This value represents the distortion between a plane representing the Navigation Base Plate (NBP) and the worst–case instrument interface plane. The allocation is based on an analysis found in Reference 23.

The allocation is assigned a "B" status.

5.10.4.3 Prediction Source

The prediction source will the same as the allocation until test data are available from the structure qualification program.

No PDR update to the prediction has been made.

5.10.5 Instrument Kinematic Mount Launch Shift

5.10.5.1 Line Item Definition

The Instrument Kinematic Mount will experience launch shift during the launch/ascent mission phase. This launch shift changes the orientation of the instrument relative to the star tracker boresight.

5.10.5.2 Allocation Rationale

The allocation is based on the RSS of the following error sources, spherical bearing liner compression, residual moment effect and preload relaxation. Estimates for these error sources are given in Reference 24. Bearing linear compression errors account for deformation of the Teflon impregnated fabric used as a bearing liner in the spherical seat of the bearing. Preload relaxation accounts for preload losses due to material relaxation during launch. The residual moment effect accounts for shifts due to the actual preloading. The allocation is assigned a "B" status.

5.10.5.3 Prediction Source

Bearing Liner Compression – This error results from a permanent set in the 0.010 in. thick Teflon impregnated fabric used as bearing liner in the spherical seat of the bearing. It is assumed that a 10% deformation of this liner will occur as a result of environmental loading. This 0.001 in. play is to be taken as (+) in one end (–) in the other end of the plate in order to get the worst case tilt for errors in the pitch , roll and Yaw orientation. This effect considers both sides of the kinematic mounts, the instrument side and the spacecraft side of the mount where the one and two-axis restraint mounts use additional spherical bearings.

Residual Moment Effect – All kinematic mount spherical bearings are pre-loaded in order to eliminate clearance problems which would degrade the remate accuracy and which also would produce unwanted launch shifts. These pre-loads however causes the plate to bend slightly and therefore introduces a pitch and roll error. The bending moment used in this calculation is 25.0 in-lbs. (the maximum possible as supplied by bearing vendor) and it is applied at each corner of the plate in the plane of the diagonals to the plate corners. Resulting distortions were calculated using a preliminary GN&C Optical bench FEM, see Reference 23.

Preload Relaxation – A 10% loss of preload due to material relaxation before during and after launch was assumed for this analysis. This results in a 0.0003 increase in length of the mated mount assembly. Only one mount is assumed to change in length.

No PDR update to the prediction has been made.

5.11 Remate Errors

Category Definition – The Spacecraft consists of a number of modular packing components. Instruments are kinematically mounted to the Spacecraft's structure. Instruments can be removed from their plates and the plates can be removed from the Spacecraft's structure. Also, star trackers and other attitude sensors are mounted to a Navigation Base Plate (the baseplate of the GN&C Sensor

Equipment Module) which in turn is mounted to the Spacecraft structure. In anticipation of unscheduled events, the budget allows for certain modules to be initially installed and then later removed to support further module level integration and test. The orientation of the module removed will not be exactly the same when it is reinstalled at a later date. These differences are denoted as remate errors. The budget allows that both the flight Navigation Base Plate and the flight Instruments be installed, removed, and later reinstalled to support integration and test flows.

5.11.1 Navigation Base Plate Removal

5.11.1.1 Line Item Definition

Should the Navigation Base Plate be removed and reinstalled a remate error will exist. In other words, the star-tracker orientation will be slightly different this time due to a remate error. This error will be measured prior to shipment, therefore this error applies to pointing accuracy only.

5.11.1.2 Allocation Rationale

The allocation is derived from statistical analysis of UARS test data, Reference 24. This line item is assigned a "B" status.

5.11.1.3 Prediction Source

The current prediction is the same as the allocation. No PDR update to the prediction has been made.

5.11.2 Instrument Mounting Plate Removal

5.11.2.1 Line Item Definition

Should the Instrument Mounting Plate be removed and reinstalled without a re-measure a remate error will exist. In other words, the instrument boresight orientation will be slightly different this time due to a remate error.

5.11.2.2 Allocation Rationale

The allocation is derived from statistical analysis of UARS test data, Reference 24. The allocation is assigned an "B" status.

5.11.2.3 Prediction Source

The current prediction is the same as the allocation. No PDR update to the prediction has been made.

5.12 Star Position Accuracy

5.12.1 Category Definition

This is a new category, meant to replace star tracker structure static thermal distortion, star tracker structure moisture distortion, and star tracker boresight launch shift. The category includes all other

static star position errors encompassed by the star position accuracy requirement in the Solid State Star Tracker specification. CCD CTE degradation, launch shift, static thermal distortion and moisture distortion errors are included.

5.12.2 Allocation Rationale

The allocations for pointing knowledge and pointing accuracy are derived from the Solid State Star Tracker Performance Specification. The specification includes a requirement for reported star position accuracy. Because the frequency content of this error is not specified it is prudent to assume that all of this error is static even though in reality this error is partially dynamic and that dynamic portion is filtered..

5.12.3 Prediction Source

The prediction is derived from the Ball Solid State Star Tracker Proposal and is documented in Reference 4.

6 POINTING BUDGETS AND PREDICTIONS

This section contains allocation and prediction summaries for each area of pointing: pointing knowledge, pointing accuracy and pointing jitter/stability. Also included for each area is a summary of the verification plans for each area. Allocation status information formerly found in this section is currently included only in section 5.

These budgets apply to direct-mounted instruments as well as instruments mounted on instrument mounting plates. This is true even though there are several line items included in the budgets that only apply to instrument plate mounted instruments. Therefore these budgets can be considered to have added "margin" for direct-mounted instruments.

6.1 Pointing Knowledge

Figure 8 (next page) shows the applicable line items within each pointing error category for the Pointing Knowledge budget and the method used to combine the line items and the pointing error categories.

Tables - Table V shows the worst-case pointing knowledge budget, current prediction and verification plan. Pointing Knowledge is a 3σ Zero-to-Peak allocation.

Summary - Pointing knowledge is driven by launch shifts (star tracker boresight through instrument mounts) as well as measurement errors associated with the alignment procedure and thermal distortion (predominantly of the Spacecraft structure).

Star tracker mount launch shift, moisture distortion, and dynamic thermal distortion as well as spacecraft structure static thermal distortion allocations in the pointing knowledge budget represent design challenges. Design and analysis of the star tracker mounting bracket are on-going. The current prediction for both of these items exceeds the allocation, however the overall assessment still meets the CIID pointing knowledge allocation.

The tightest boresight pointing knowledge requirement is at ASTER VNIR at 120 arc-seconds, per axis, 3σ. When 90 arc-seconds of pointing knowledge error to the interface is RSS'ed with the 60 arc-seconds of pointing knowledge error allocated to the instrument, the knowledge requirement is still met. Predictions are compared against the CIID Spacecraft allocation of 90 arcseconds, 3σ, per axis for pointing knowledge.

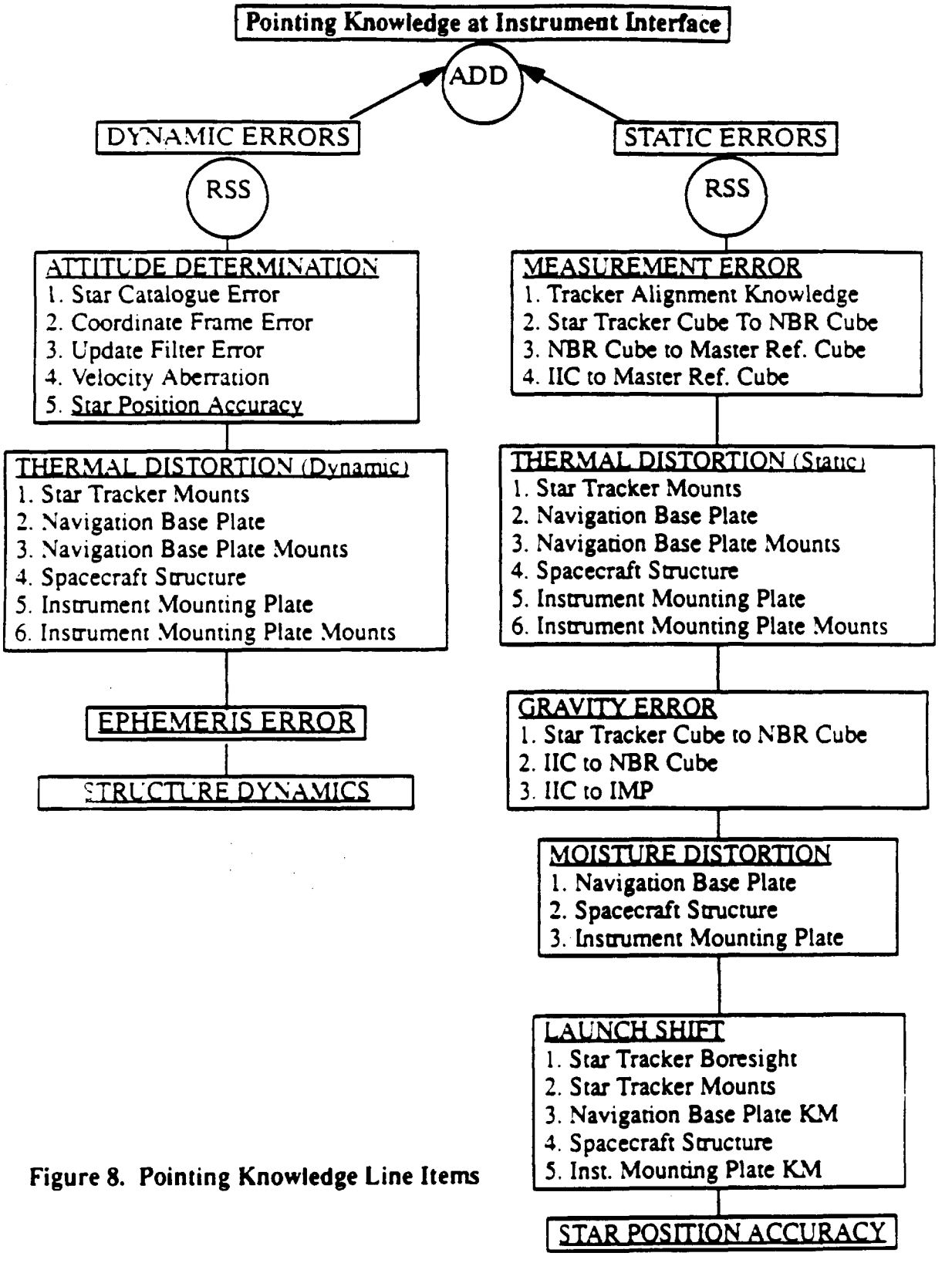

Figure 8. Pointing Knowledge Line Items

Table V – Dynamic Pointing Knowledge Errors

	Allocation			Prediction			
	Roll	Pitch	Yaw	Roll	Pitch	Yaw	Verification
Attitude Determination (RSS)	13.1	12.8	7.9	9.6	11.6	7.1	
Star Catalogue Error	0.6	0.6	0.6	0.6	0.6	0.6	Analysis – Complete, Reference 25
Coordinate Frame Error	0.5	0.5	0.5	0.5	0.5	0.5	Analysis – Complete, Reference 25
Update Filter Error	12.4	12.1	6.9	9.1	11.2	6.5	Analysis – System PDR, GN&C CDR. Note: Combined simulation with ACS and Ephemeris errors.
Velocity Aberration	0.3	0.3	0.3	0.3	0.3	0.3	Analysis – Complete, Reference 25
Star Position Accuracy	4.0	4.0	4.0	2.8	2.8	2.8	TBD – Vendor.

Table V (continued) – Dynamic Pointing Knowledge Errors							
	Allocation			Prediction			
	Roll	Pitch	Yaw	Roll	Pitch	Yaw	Verification
Thermal Distortion (RSS)	3.3	5.2	3.3	4.3	4.2	2.1	
Star Tracker Mounts	0.5	0.5	0.5	4.3	4.1	2.0	Analysis – System PDR, Bus CDR
GN&C EM Bench (Includes Bench Kinematic Mounts)	1.3	1.3	1.3	0.4	0.2	0.1	Analysis – System PDR, Bus CDR
Spacecraft Structure	3.0	5.0	3.0	0.5	0.7	0.5	Analysis – System PDR, Bus CDR
Instrument Mounting Plate (Includes IMP Kinematic Mounts)	0.4	0.8	0.4	0.0	0.5	0.1	Analysis – System PDR, Bus CDR
Ephemeris Error	4.4	4.4	4.4	1.3	2.9	1.3	Analysis – System PDR, GN&C CDR.
Structure Dynamics	6.5	5.2	5.7	3.0	5.9	5.1	Analysis – System PDR, Bus CDR. Note: S/C modal model validated during modal testing in Structure test flow. Recommendation has been made that GIIS verification matrix indicate disturbance inputs verified by test by instrument provider.
Dynamic Pointing Knowledge Subtotal	15.6	15.4	11.2	11.0	14.0	9.1	

Table V (continued) – Static Pointing Knowledge Errors							
	Allocation			Prediction			
	Roll	Pitch	Yaw	Roll	Pitch	Yaw	Verification
Measurement Error (RSS)	**20.7**	**20.7**	**20.7**	**15.1**	**15.1**	**15.1**	
Tracker Alignment Knowledge	2	2	2	9.0	9.0	9.0	Analysis – SSST PDR, SSST CDR
SSST Cube to NBR Cube	15.0	15.0	15.0	7.0	7.0	7.0	Analysis – Complete, Reference 24.
NBR Cube to MRC	10.0	10.0	10.0	7.0	7.0	7.0	Analysis – Complete, Reference 24.
IAC to MRC	10.0	10.0	10.0	7.0	7.0	7.0	Analysis – Complete, Reference 24.
Thermal Distortion (RSS)	**10.5**	**35.9**	**10.1**	**27.4**	**39.2**	**8.6**	
Star Tracker Mounts	5.0	5.0	5.0	26.8	15.5	4.8	Analysis – System PDR, Bus CDR
GN&C EM Bench (Includes Bench Kinematic Mounts)	5.4	5.4	5.1	2.7	0.0	2.2	Analysis – System PDR, Bus CDR
Spacecraft Structure	7.0	35.0	7.0	5.2	36.0	7.0	Analysis – System PDR, Bus CDR
Instrument Mounting Plate (Includes IMP Kinematic Mount)	2.2	3.1	1.4	0.1	0.5	0.2	Analysis – System PDR, Bus CDR

Table V (continued) – Static Pointing Knowledge Errors							
	Allocation			Prediction			
	Roll	Pitch	Yaw	Roll	Pitch	Yaw	Verification
Gravity Error (RSS)	**12.0**	**38.0**	**20.4**	**7.5**	**38.6**	**14.8**	
SSST Cube to NBR Cube	4.0	14.0	1.0	1.3	7.9	2.2	Analysis – System PDR, Bus CDR
NBR Cube to IAC	8.0	32.0	20.0	7.3	35.8	13.7	Analysis – System PDR, Bus CDR
IMP Bending	8.0	15.0	4.0	1.4	12.0	5.1	Analysis – System PDR, Bus CDR
Moisture Distortion (RSS)	**10.6**	**7.5**	**13.3**	**17.7**	**13.8**	**4.5**	
GN&C EM Bench	4.0	4.0	4.0	2.9	0.9	0.6	Analysis – System PDR, Bus CDR
Spacecraft Structure	9.0	5.0	12.0	15.9	6.4	2.6	Analysis – System PDR, Bus CDR
IMP	4.0	4.0	4.0	7.3	12.2	3.1	Analysis – System PDR, Bus CDR

Table V (continued) – Static Pointing Knowledge Errors							
	Allocation			Prediction			
	Roll	Pitch	Yaw	Roll	Pitch	Yaw	Verification
Launch Shift (RSS)	**30.9**	**29.5**	**22.8**	**24.1**	**23.1**	**31.5**	
SSST Boresight	6.0	6.0	6.0	3.0	3.0	3.0	Test – Vendor, before and after component environmental test.
SSST Mount	20.0	20.0	20.0	20.0	20.0	20.0	Test – Alignment Verification (Phase 4), before & after Acoustic/Shock. Verify combined error from NBC to IAC
GN&C Sensor EM Bench KM	13.7	13.3	4.8	4.5	5.7	6.6	Test – Measure before and after static load test of kinematic mount EDM. Measure before and after module vibration.
Spacecraft Structure	12.0	9.0	6.0	12.0	9.0	6.0	Test – Alignment Verification (Phase 4), before & after Acoustic/Shock. Verify combined error from NBC to IAC
Instrument KM	13.7	13.3	4.8	3.1	3.4	22.5	Test – Measure before and after static load test of kinematic mount EDM. Measure before and after module vibration.
Star Position Knowledge	**10.0**	**10.0**	**10.0**	**3.1**	**3.1**	**3.1**	Analysis – Tracker CDR, GN&C CDR.
Static Pointing Knowledge Subtotal	**43.0**	**64.8**	**41.7**	**44.0**	**63.2**	**39.3**	

Table V (continued) – Pointing Knowledge Error Summary

	Allocation			Prediction			
	Roll	Pitch	Yaw	Roll	Pitch	Yaw	
Dynamic Pointing Knowledge Subtotal	15.6	15.4	11.2	11.0	14.0	9.1	
Static Pointing Knowledge Subtotal	43.0	64.8	41.7	44.0	63.2	39.3	
Sum of Subtotals	58.6	80.1	53.0	55.0	77.2	48.1	
Unallocated	31.4	9.9	37.0				
Interface Requirement	90	90	90				
Interface To Boresight Allocation	60	60	60				
Boresight Requirement	108	108	108				

6.2 Pointing Accuracy

Figure 9 (next page) shows the applicable line items within each pointing error category for the Pointing Accuracy budget and the method used to combine the line items and the pointing error categories.

Predictions are compared against the UIID Spacecraft allocation of 150 arcseconds, 3σ, per axis for pointing accuracy.

Tables - Table VI shows the worst-case pointing accuracy budget which satisfies all requirements. Pointing accuracy is a 3σ Zero-to-Peak allocation.

Summary - Pointing accuracy is driven by launch shifts (star tracker boresight through IMP mounts), by thermal distortion of the Spacecraft's structure, by measurements associated with the alignment procedure, and by positioning errors associated with manufacturing of the Spacecraft's structure. The same issues discussed in the knowledge summary section also apply to accuracy as well.

The UIID allocation of 150 arc-seconds provides significant margin with respect to the tightest instrument interface requirement, of 320 arc-seconds per axis 3σ.

The tightest boresight pointing accuracy requirement are the CERES instrument at 360 arc-seconds per axis, 3σ. When 150 arc-seconds of pointing accuracy error at the bus-to-instrument interface is RSS'ed with 194 arc-seconds of pointing accuracy error between the bus-to-instrument interface and the boresight, the instrument boresight requirement is met. Therefore, the pointing accuracy error allocated between the bus-to-instrument interface and the boresight, including margin, is 194 arc-seconds per axis 3σ. Additional unallocated margin per the UIID still exists.

This budget applies to direct-mounted instruments as well as instruments mounted on instrument mounting plates. This is true even though there are several line items included in the budgets that only apply to instrument plate mounted instruments. Therefore these instruments can be considered to have added "margin".

Category Breakdowns - The only additional pointing errors relative to Pointing Knowledge are due to the attitude control, remate, and positioning error categories which do not effect knowledge but do contribute to accuracy. Each allocation is in arc-sec three sigma.

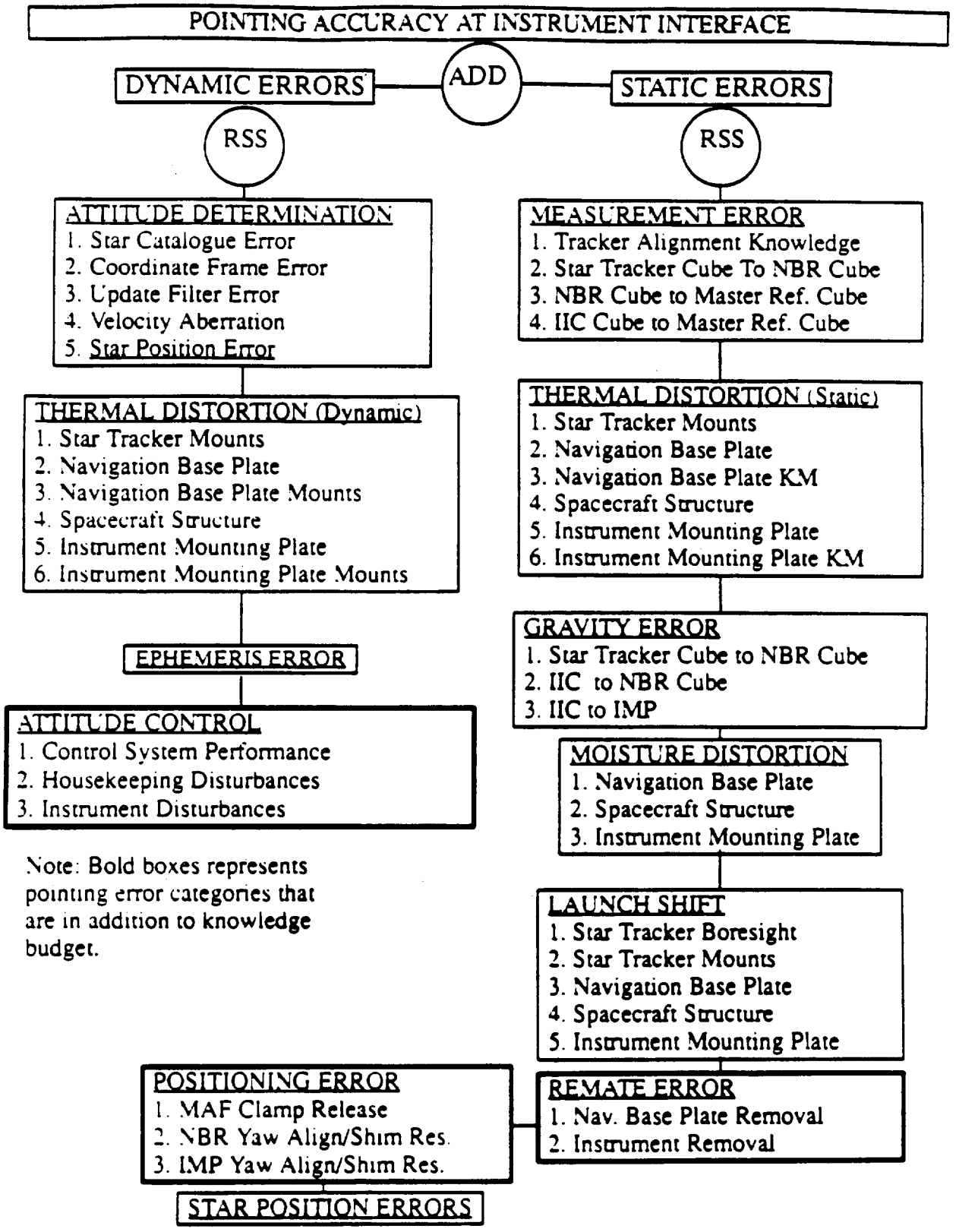

Figure 9. Pointing Accuracy Line Items

Table VI – Dynamic Pointing Accuracy Errors							
	Allocation			Prediction			
	Roll	Pitch	Yaw	Roll	Pitch	Yaw	Verification
Attitude Determination (RSS)	13.1	12.8	7.9	9.6	11.6	7.1	
Star Catalogue Error	0.6	0.6	0.6	0.6	0.6	0.6	Analysis – Complete, Reference 25
Coordinate Frame Error	0.5	0.5	0.5	0.5	0.5	0.5	Analysis – Complete, Reference 25
Update Filter Error	12.4	12.1	6.9	9.1	11.2	6.5	Analysis – System PDR, GN&C CDR. Note: Combined simulation with ACS and Ephemeris errors.
Velocity Aberration	0.3	0.3	0.3	0.3	0.3	0.3	Analysis – Complete, Reference 25
Star Position Accuracy	4.0	4.0	4.0	2.8	2.8	2.8	TBD – Vendor.

Table VI (continued) – Dynamic Pointing Accuracy Errors							
	Allocation			Prediction			
	Roll	Pitch	Yaw	Roll	Pitch	Yaw	Verification
Thermal Distortion (RSS)	3.3	5.2	3.3	4.3	4.2	2.1	
Star Tracker Mounts	0.5	0.5	0.5	4.3	4.1	2.0	Analysis – System PDR, Bus CDR
GN&C EM Bench (Includes Bench Kinematic Mounts)	1.3	1.3	1.3	0.4	0.2	0.1	Analysis – System PDR, Bus CDR
Spacecraft Structure	3.0	5.0	3.0	0.5	0.7	0.5	Analysis – System PDR, Bus CDR
Instrument Mounting Plate (Includes IMP Kinematic Mounts)	0.4	0.8	0.4	0.0	0.5	0.1	Analysis – System PDR, Bus CDR
Ephemeris Error	4.4	4.4	4.4	1.3	2.9	1.3	Analysis – System PDR, GN&C CDR. Note: Combined simulation with ACS and ADS

Table VI (continued) – Dynamic Pointing Accuracy Errors							
	Allocation			Prediction			
	Roll	Pitch	Yaw	Roll	Pitch	Yaw	Verification
Attitude Control (RSS)	9.9	9.1	9.4	4.7	6.0	5.5	
Control System Error	7.5	7.5	7.5	3.6	1.0	1.9	Analysis – System PDR, GN&C CDR. Note: Combined simulation with Ephemeris and ADS.
Housekeeping Disturbances	2.0	1.5	1.5	1.4	1.0	0.5	Analysis – System PDR, Bus CDR. Note: S/C modal model validated during modal testing in Structure test flow.
Instrument Disturbances	6.2	5.0	5.5	2.6	5.8	5.1	Analysis – System PDR, Bus CDR. Note: S/C modal model validated during modal testing in Structure test flow. Recommend ECN to GIIS verification matrix (section 3.7.6.2.2.1) to indicate disturbance inputs verified by test by instrument provider.
Dynamic Pointing Accuracy Subtotal	17.3	17.1	13.5	11.6	14.0	9.3	

Table VI (continued) – Static Pointing Accuracy Errors							
	Allocation			Prediction			
	Roll	Pitch	Yaw	Roll	Pitch	Yaw	Verification
Measurement Error (RSS)	**20.7**	**20.7**	**20.7**	**15.1**	**15.1**	**15.1**	
Tracker Alignment Knowledge	2	2	2	9.0	9.0	9.0	Analysis – SSST PDR, SSST CDR
SSST Cube to NBR Cube	15.0	15.0	15.0	7.0	7.0	7.0	Analysis – Complete, Reference 24.
NBR Cube to MRC	10.0	10.0	10.0	7.0	7.0	7.0	Analysis – Complete, Reference 24.
IMC to MRC	10.0	10.0	10.0	7.0	7.0	7.0	Analysis – Complete, Reference 24.
Thermal Distortion (RSS)	**10.5**	**35.9**	**10.1**	**27.4**	**39.2**	**8.6**	
Star Tracker Mounts	5.0	5.0	5.0	26.8	15.5	4.8	Analysis – System PDR, Bus CDR
GN&C EM Bench (Includes Bench Kinematic Mount)	5.4	5.4	5.1	2.7	0.0	1.2	Analysis – System PDR, Bus CDR
Spacecraft Structure	7.0	35.0	7.0	5.2	36.0	7.0	Analysis – System PDR, Bus CDR
Instrument Mounting Plate (Includes IMP Kinematic Mount)	2.2	3.1	1.4	0.1	0.5	0.2	Analysis – System PDR, Bus CDR

Table VI (continued) – Static Pointing Accuracy Errors							
	Allocation			Prediction			
	Roll	Pitch	Yaw	Roll	Pitch	Yaw	Verification
Gravity Error (RSS)	**12.0**	**38.0**	**20.4**	**7.5**	**38.6**	**14.8**	
SSST Cube to NBR Cube	4.0	14.0	1.0	1.3	7.9	2.2	Analysis – System PDR, Bus CDR
NBR Cube to IAC	8.0	32.0	20.0	7.3	35.8	13.7	Analysis – System PDR, Bus CDR
IMP Bending	8.0	15.0	4.0	1.4	12.0	5.1	Analysis – System PDR, Bus CDR
Moisture Distortion (RSS)	**10.6**	**7.5**	**13.3**	**17.7**	**13.8**	**4.5**	
GN&C EM Bench	4.0	4.0	4.0	2.9	0.9	0.6	Analysis – System PDR, Bus CDR
Spacecraft Structure	9.0	5.0	12.0	15.9	6.4	2.6	Analysis – System PDR, Bus CDR
IMP	4.0	4.0	4.0	7.3	12.2	3.1	Analysis – System PDR, Bus CDR

Table VI (continued) – Static Pointing Accuracy Errors							
	Allocation			Prediction			
	Roll	Pitch	Yaw	Roll	Pitch	Yaw	Verification
Launch Shift (RSS)	**30.9**	**29.5**	**22.8**	**24.1**	**23.1**	**31.5**	
SSST Boresight	6.0	6.0	6.0	3.0	3.0	3.0	Test – Vendor, before and after component environmental test.
SSST Mount	20.0	20.0	20.0	20.0	20.0	20.0	Test – Alignment Verification (Phase 4), before & after Acoustic/Shock. Verify combined error from NBC to IAC
GN&C EM Bench KM	13.7	13.3	4.8	4.5	5.7	6.6	Test – Measure before and after static load test of kinematic mount EDM. Measure before and after module vibration.
Spacecraft Structure	12.0	9.0	6.0	12.0	9.0	6.0	Test – Alignment Verification (Phase 4), before & after Acoustic/Shock. Verify combined error from NBC to IAC
Instrument KM	13.7	13.3	4.8	3.1	3.1	22.5	Test – Measure before and after static load test of kinematic mount EDM. Measure before and after module vibration.

Table VI (continued) – Static Pointing Accuracy Errors

	Allocation			Prediction			
	Roll	Pitch	Yaw	Roll	Pitch	Yaw	Verification
Remate Error	24.0	24.0	9.9	24.0	24.0	9.9	
Nav. Base Removal	17.0	17.0	7.0	17.0	17.0	7.0	Test – Measure before and after EM removals.
Instrument Removal	17.0	17.0	7.0	17.0	17.0	7.0	Test – Measure before and after EM removals.
Positioning Error (RSS)	18.0	18.0	72.1	19.4	18.3	55.4	
MAF Clamp Release	14.0	14.0	14.0	14.0	14.0	14.0	Test – Measure unclamped structure and shimmed re-clamped structure.
NBC-Yaw Align/Shim Resolution	8.0	8.0	50.0	7.3	3.3	28.9	Test – Alignment Verification (Phase 4), Post Acoustic/Shock.
IMP-Yaw Align/Shim Resolution	8.0	8.0	50.0	11.3	11.3	45.1	Test – Alignment Verification (Phase 4), Post Acoustic/Shock.
Star Position Accuracy	10.0	10.0	10.0	3.1	3.1	3.1	Analysis – Tracker CDR, GN&C CDR.
Static Pointing Accuracy Subtotal	52.5	71.4	83.9	53.8	70.0	68.6	

Table VI (continued) – Pointing Accuracy Error Summary							
	Allocation			Prediction			
	Roll	Pitch	Yaw	Roll	Pitch	Yaw	
Dynamic Pointing Accuracy Subtotal	17.3	17.1	13.5	11.6	14.0	9.3	
Static Pointing Accuracy Subtotal	52.5	71.4	83.9	53.8	70.0	68.6	
Sum of Subtotals	69.8	88.5	97.4	65.4	84.0	77.9	
Unallocated	80.2	61.5	52.6				
Interface Requirement	150	150	150				
Interface To Boresight Allocation	187	187	187				
Boresight Requirement	240	240	240				

6.3 Pointing Jitter and Stability

The spacecraft requirements for jitter and stability are TBD. Therefore, the jitter and stability allocations are driven by the instrument boresight requirements, Table II. The pointing jitter and stability allocations are 3σ Peak-to-Peak.

Methodology - Individual line item allocations were not established for jitter and stability. The lowest level for which allocations are provided are the pointing error categories, shown in Tables VII through IX. Section 3 lists all of the time intervals for which instrument requirements exist. Four hundred twenty, 9, and 1.8 seconds were chosen to have budgets and predictions presented. By meeting the requirements at these time intervals, the requirements at all other time intervals will be met by default. For example, a spacecraft which meets the 18 arc-second roll requirement at 9 seconds will certainly meet the 79 arc-second roll requirement in 6 seconds. Verification of satisfaction of boresight requirements for time intervals below 1 second is not reliable due to the limitations of analysis models. Therefore, no budgets are carried for the high frequency requirements. Predictions shown are based on the rotations at the worst case node of the instrument (designated as the instrument boresight).

The 1.8 second budget is based on performance at the SWIR instrument-to-spacecraft interface. The 9 second budget is based on performance at the VNIR instrument-to-spacecraft interface. The 420 second budget is based on performance at the MISR instrument-to-spacecraft interface.

UIID Instrument Flex Allocation - An allocation is required for motions of the instrument boresight relative to the bus-to-instrument interface. The instrument design, which drives much of this allocation, is not under GE control, however the allocation is a function of housekeeping and instrument disturbances. This allocation is as specified in instrument UIID's.

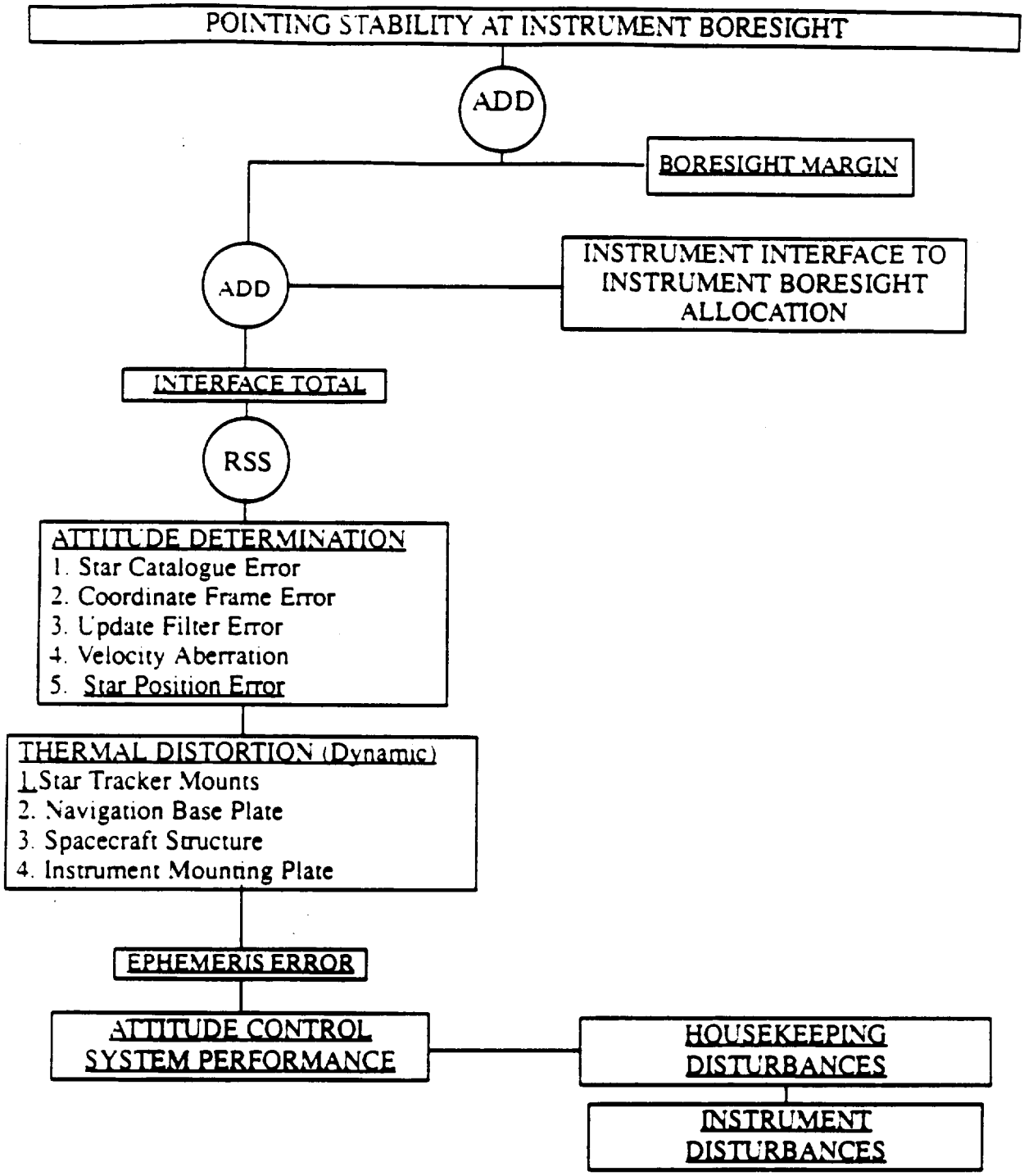

Figure 10. Pointing Stability at The Instrument Boresight

6.3.1 Pointing Stability @ 420 seconds at the MISR Instrument Boresight

Figure 10 shows the applicable line items within each pointing error category for the Pointing stability budget and the method used to combine the line items and the pointing error categories. Table VII shows the pointing budget. From the table it can be seen that the MISR requirement of 20 arc-seconds per axis. for stability at 420 seconds is met with margin.

6.3.2 Pointing Stability @ 9 second at the VNIR Instrument Boresight

Figure 10 shows the applicable line items within each pointing error category for the Pointing stability budget and the method used to combine the line items and the pointing error categories. Table VIII shows the pointing budget. From the table it can be seen that the VNIR requirements are met with margin.

6.3.3 Pointing Stability @ 1.8 seconds at the SWIR Instrument Boresight

Figure 10 shows the applicable line items within each pointing error category for the Pointing stability budget and the method used to combine the line items and the pointing error categories. Table IX shows the pointing budget. From the table it can be seen that the SWIR requirements at 1.8 seconds are not met. The dominant error source at this time can be seen to be instrument disturbances. Detailed analysis of the instrument disturbances are provided in References 10 and 14, and show that the SWIR Stirling Cycle Cooler is the dominant jitter source at this time.

Table VII – Pointing Stability (420 Seconds at MISR Boresight)

	Allocation			Prediction			
	Roll	Pitch	Yaw	Roll	Pitch	Yaw	
Attitude Determination Error	6.8	7.0	4.0	4.8	7.7	2.7	Analysis – System PDR, GN&C CDR. Note: Combined simulation with ACS and Ephemeris.
Ephemeris Error	4.4	4.4	4.4	2.3	3.6	2.3	Analysis – System PDR, GN&C CDR. Note: Combined simulation with ACS and ADS.
Thermal Distortion	0.9	0.4	0.1	2.3	2.1	1.0	Analysis – System PDR, SMS CDR
Control System Error	5.0	3.3	5.4	5.6	1.8	3.2	Analysis – System PDR, GN&C CDR. Note: Combined simulation with Ephemeris and ADS.
Housekeeping Disturbances	4.8	4.1	3.9	2.7	1.9	0.9	Analysis – System PDR, Bus CDR, System CDR. Note: S/C modal model validated during modal testing in Structure test flow.
Instrument Disturbances (With Coolers)	8.1	4.0	8.3	4.8	9.4	9.3	Analysis – System PDR, Bus CDR, System CDR. Note: S/C modal model validated during modal testing in Structure test flow. Recommend ECN to GIIS verification matrix (section 3.7.6.2.2.1) to indicate disturbance inputs verified by test by instrument provider.
Interface Total	**13.4**	**10.6**	**12.2**				
UIID Allocation Intfc to Bore	1.2	1.2	1.2				
Margin (10% of Requirement)	1.6	1.6	1.6				
Boresight Total (Add)	16.2	13.4	12.2				
Boresight Requirement	20.0	20.0	20.0	9.8	13.1	10.6	

Table VIII – Pointing Stability (9 Seconds at VNIR Boresight)

	Allocation			Prediction			
	Roll	Pitch	Yaw	Roll	Pitch	Yaw	
Attitude Determination Error	0.8	0.8	0.8	1.1	2.6	0.9	Analysis – System PDR, GN&C CDR. Note: Combined simulation with ACS and Ephemeris.
Ephemeris Error	1.5	1.5	1.5	0.4	0.9	0.4	Analysis – System PDR, GN&C CDR. Note: Combined simulation with ACS and ADS.
Thermal Distortion	0.0	0.0	0.0	0.0	0.0	0.0	Analysis – System PDR, SMS CDR
Control System Error	2.9	2.0	1.8	1.8	0.7	1.0	Analysis – System PDR, GN&C CDR. Note: Combined simulation with Ephemeris and ADS.
Housekeeping Disturbances	1.8	1.2	2.0	1.6	1.1	0.5	Analysis – System PDR, Bus CDR, System CDR. Note: S/C modal model validated during modal testing in Structure test flow.
Instrument Disturbances	6.7	7.6	6.8	4.2	5.5	6.3	Analysis – System PDR, Bus CDR, System CDR. Note: S/C modal model validated during modal testing in Structure test flow. Recommend ECN to GHS verification matrix (section 3.7.6.2.2.1) to indicate disturbance inputs verified by test by instrument provider.
Interface Total	**7.7**	**8.1**	**7.5**				
UHD Allocation Intfc to Bore	1.2	1.2	1.2				
Margin (10% of Requirement)	1.8	1.2	6.0				
Boresight Total (Add)	10.7	10.5	14.7				
Boresight Requirement	18.0	12.0	60.0	5.0	6.3	6.5	

Table IX – Pointing Stability (1.8 Seconds at SWIR Boresight)

	Allocation			Prediction			
	Roll	Pitch	Yaw	Roll	Pitch	Yaw	
Attitude Determination Error	0.2	0.2	0.2	0.3	0.6	0.2	Analysis – System PDR, GN&C CDR. Note: Combined simulation with ACS and Ephemeris.
Ephemeris Error	0.4	0.4	0.4	0.1	0.2	0.1	Analysis – System PDR, GN&C CDR. Note: Combined simulation with ACS and ADS.
Thermal Distortion	0.0	0.0	0.0	0.0	0.0	0.0	Analysis – System PDR, SMS CDR
Control System Error	0.8	0.6	0.5	0.4	0.4	0.2	Analysis – System PDR, GN&C CDR. Note: Combined simulation with Ephemeris and ADS.
Housekeeping Disturbances	0.4	0.7	0.7	0.3	0.4	0.5	Analysis – System PDR, Bus CDR, System CDR. Note: S/C modal model validated during modal testing in Structure test flow.
Instrument Disturbances	1.9	1.8	1.3	3.1	4.7	8.4	Analysis – System PDR, Bus CDR, System CDR. Note: S/C modal model validated during modal testing in Structure test flow. Recommend ECN to GIIS verification matrix (section 3.7.6.2.2.1) to indicate disturbance inputs verified by test by instrument provider.
Interface Total	**2.2**	**2.1**	**1.6**				
UHD Allocation Intfc to Bore	1.0	1.0	1.0				
Margin (10% of Requirement)	0.4	0.4	0.9				
Boresight Total (Add)	3.5	3.4	3.5				
Boresight Requirement	3.5	3.5	9.0	3.2	4.8	8.4	

7 Contract End Item Specification Allocation

This section provides an input to the Contract End Item (CEI) specification. The input is based on the allocations in the previous sections. As of the date of this writing, the CEI reflects a previous version of the "EOS Pointing Error Budget". The CEI and in turn the GN&C and SMS subsystems specifications should be updated to reflect these new requirements.

7.1 Pointing Knowledge

GN&C Subsystem Dynamic Errors – Attitude Determination, and Ephemeris Determination Error errors are RSS'ed to establish the Guidance Navigation and Control subsystem allocation.

GN&C Subsystem Static Errors – The Static Star Position Accuracy error establishes the Guidance Navigation and Control subsystem allocation.

Structures Subsystem Dynamic Errors – Structure Dynamics and thermal distortion errors are RSS'ed to establish the structures subsystem allocation.

Structures Subsystem Static Errors – Measurement errors, thermal distortion errors, moisture distortion errors and launch shift errors as well as gravity errors are RSS'ed to establish the structures subsystem allocation.

Recommended Contract End Item Specification Pointing Knowledge						
	Dynamic			Static		
	Roll	Pitch	Yaw	Roll	Pitch	Yaw
Guidance Navigation and Control	13.8	13.5	9.1	10.0	10.0	10.0
Structures and Mechanisms	7.3	7.4	6.6	41.8	64.0	40.5

Current Contract End Item Specification Pointing Knowledge						
	Dynamic			Static		
	Roll	Pitch	Yaw	Roll	Pitch	Yaw
Guidance Navigation and Control	13.8	13.5	8.5	19.2	19.2	19.2
Structures and Mechanisms	4.5	6.5	5.8	52.5	71.9	56.4

7.2 Pointing Accuracy

GN&C Subsystem Dynamic Errors – Attitude Determination, Ephemeris Determination Error, Attitude Control Error (including instrument and housekeeping disturbance responses) are RSS'ed to establish the Guidance Navigation and Control subsystem allocation.

GN&C Subsystem Static Errors – The Static Star Position Accuracy error establishes the Guidance Navigation and Control subsystem allocation.

Structures Subsystem Dynamic Errors – Thermal distortion errors establish the structures subsystem allocation.

Structures Subsystem Static Errors – Measurement errors, thermal distortion errors, moisture distortion errors, launch shift errors, gravity errors, positioning and remate errors are RSS'ed to establish the structures subsystem allocation.

Recommended Contract End Item Specification Pointing Accuracy						
	Dynamic			Static		
	Roll	Pitch	Yaw	Roll	Pitch	Yaw
Guidance Navigation and Control	17.0	16.3	13.1	10.0	10.0	10.0
Structures and Mechanisms	3.3	5.2	3.3	51.5	70.7	83.3

Current Contract End Item Specification Pointing Accuracy						
	Dynamic			Static		
	Roll	Pitch	Yaw	Roll	Pitch	Yaw
Guidance Navigation and Control	18.5	17.2	13.1	21.9	21.9	21.9
Structures and Mechanisms	3.8	6.3	2.8	71.6	92.8	129.4

7.3 Pointing Jitter/Stability

GN&C Subsystem Dynamic Errors – Attitude Determination, Ephemeris Determination Error, Attitude Control Error, housekeeping disturbance responses, and instrument disturbance response errors are RSS'ed to establish the Guidance Navigation and Control subsystem allocations for the three time periods presented.

Structures Subsystem Dynamic Errors – Thermal distortion errors establish the structures subsystem allocation.

Recommended Contract End Item Specification Pointing Jitter/Stability									
	1.8 Seconds			9 Seconds			420 Seconds		
	Roll	Pitch	Yaw	Roll	Pitch	Yaw	Roll	Pitch	Yaw
Guidance Navigation and Control	2.2	2.1	1.6	7.7	8.1	7.5	13.4	10.6	12.2
Structures and Mechanisms	–	–	–	–	–	–	0.9	0.4	0.1

Current Contract End Item Specification Pointing Jitter/Stability									
	1.0 Seconds			9 Seconds			420 Seconds		
	Roll	Pitch	Yaw	Roll	Pitch	Yaw	Roll	Pitch	Yaw
Guidance Navigation and Control	2.3	2.3	3.5	7.5	7.4	7.3	14.7	14.1	13.9
Structures and Mechanisms	–	–	–	–	–	–	1.5	3.5	2.0

(This page intentionally left blank.)

8 References

1. P. Mookerjee, "EOS AM Attitude Determination", EOS-DN-GN&C-034, 4/20/92.
2. P. Mookerjee and J. Boka, "EOS-AM Attitude Determination Covariance Analysis", EOS-Study-308, 27 August,1993.
3. P. Mookerjee, "EOS-AM Attitude Determination Results", EOS-STUDY-302, August 1993.
4. J. McGrath, P. Matheson, "Comparison of EOS Spacecraft Performance Using Candidate Star Trackers", EOS-Study-251 Rev A, 12/2/92
5. M. P. Hughes, "EOS Normal Mode Controller Design", EOS-GN&C-037, May 13, 1992.
6. M. Hughes, "EOS Normal Mode Controller Windows for Jitter Study", EOS-GN&C-288, 23 July, 1993.
7. M. Hughes, "EOS Normal Mode Controller for Jitter Study", EOS-GN&C-281, 7/13/93.
8. H. Silverman, "August 1992 Pointing and Orbit Study Update", EOS-DN-SE&I-037, 8/7/92.
9. R. Agarwal, "Jitter Study Results for EOS AM Spacecraft", EOS-Study-221, 4/28/92.
10. J. Kotecki, "Jitter Results For EOS-AM (EOS8) Spacecraft, EOS-STUDY-300,
11. R. Hughes, "Analysis of SAD, HGA Tracking, SA Snap, and RW for EOS-AM Jitter Study", EOS-STUDY-301, 8/13/93.
12. P. Mookerjee, "EOS-AM Jitter Study Results For HGA Slews With Feedforward Compensation", EOS-STUDY-303.
13. P. Mookerjee, "EOS-AM High Gain Controller and Spacecraft Feedforward Controller Design", EOS-DN-GN&C-051,
14. J. Kotecki, "Effect of Stirling Cycle Coolers and Pressure Modulated Cells on EOS AM (EOS8) Spacecraft Jitter", EOS-Study-299, 8/11/93
15. Joe Herberg, "Derived Requirements for Navigation to Support Attitude Determination and Control, EOS-GN&C-077, 8/20/90.
16. J. Herberg, "Final Navigation Input to Pointing/Orbit Study", EOS-GN&C-289, 7/28/93.
17. J. Herberg, "Navigation Input to Pointing/Orbit Study", EOS-GN&C-280, 6/22/93.
18. J. Herberg, "Navigation System Real-Time Interface Algorithm", EOS-DN-GN&C-053, 4/28/93.
19. D. Linder, "EOS-A Pointing and Orbit Requirements", EOS-DN-SE&I-020, 10/14/91.

20. N. Kordani and L. Gavin, "EOS-AM Spacecraft Structure Thermal, Hygroscopic, and One-G Distortions", EOS-DN-STR-059, August 1993.

21. R. Lee. "Distortion Analysis of EOS Instrument Plates and GN&C Module Optical Bench", EOS-DN-STR-045, 5/5/92.

22. R. M. Clark, E. W. Grob, "EOS Platform Preliminary Dynamic Thermal Distortion", EOS-STR-065, August 15, 1991.

23. R. M. Clark, "EOS-AM Primary Structure Preliminary Thermal, Hygroscopic, and One-G Distortion Analysis, EOS-DN-STR-046, 5/13/92.

24. Osvaldo Regalado, "EOS Preliminary Pointing Error Estimates and Rationale", EOS-DN-STR-037 Rev B, 5/18/92.

25. P. Weir, "EOS Attitude Determination Pointing Error Sources (Revision 1), EOS-GN&C-089, 11/2/90.

(This page intentionally left blank.)

NOTES

20043202
CAGE No. 49671
30 August 1993

(Preliminary)
Previously Designed, Fabricated or Flown Hardware for EOS–AM Spacecraft (PA–120)

Prepared under:
Contract NAS5–32500
NASA Goddard Space Flight Center
Greenbelt, Maryland 20771

Prepared by:
Martin Marietta Corporation
Astro Space
P.O. Box 800
Princeton, New Jersey 08543–0800

DCC082693

REVISION LOG

This log identifies those portions of this document which have been revised since the original issue. Revised portions of each page, for the current revision only, are identified by marginal striping.

Revision	Paragraph Number(s) Affected	Rev. Date	Approval
Preliminary		08/30/93	ECH

TABLE OF CONTENTS

SECTION / PARAGRAPH	TITLE	PAGE
1	INTRODUCTION	1
1.1	Purpose	1
1.2	Scope	1
1.3	Applicable Documents	1
1.4	Definitions	1
2	PREVIOUSLY DESIGNED, FABRICATED OR FLOWN HARDWARE DATA	2
2.1	Previously Designed, Fabricated or Flown Hardware for In–house Martin Marietta Fabricated Items	2
2.2	Previously Designed, Fabricated or Flown Data for Martin Marietta's Subcontractors	2
2.3	Previously Designed, Fabricated or Flown Data Format	2

LIST OF TABLES

TABLE	TITLE	PAGE
I	Previously Designed, Fabricated or Flown Hardware Data	3

1 INTRODUCTION

1.1 Purpose

The Previously Designed, Fabricated or Flown Hardware Data for the EOS Spacecraft Bus is presented in this report. The hardware listing contains all components in the spacecraft bus which satisfy the selection criteria delineated in the GSFC PAR (420–02–05) and the Martin Marietta Performance Assurance Implementation Plan (20005397).

1.2 Scope

This is a preliminary listing rather than a final submittal as required by GSFC Data Requirement PA–120. The listing is not finalized as not all of the subcontracts have been placed at this time and the necessary information to complete the listing is not yet available. The Previously Designed, Fabricated or Flown Hardware Data is required to highlight design elements that the contractor or subcontractor believes will satisfy the GSFC PAR requirements based on heritage analysis or testing. The listing will be updated after the remaining subcontracts have been placed and have gone through their PDRs. The listing is performed at the component level with the exception of any PWBs for which a heritage analysis (thermal, stress, etc.) is planned to be used. Use of "heritage" for EEE parts is controlled by the Parts Control Board which GSFC is a full participating member. A final listing will be provided at spacecraft CDR.

1.3 Applicable Documents

The following documents, of the exact issue shown, form a part of this specification to the extent specified herein:

20005397	EOS Performance Assurance Implementation Plan
PS20005404	EOS Verification Specification
Source:	Martin Marietta Astro Space P. O. Box 800 Princeton, NJ 08543–0800

1.4 Definitions

Previously Designed, Fabricated Flown Hardware	Hardware that the contractor or subcontractor believes or will satisfy EOS Program requirements without performing qualification testing or updated analysis based on the hardware's previous heritage.

2 PREVIOUSLY DESIGNED, FABRICATED OR FLOWN HARDWARE DATA

2.1 Previously Designed, Fabricated or Flown Hardware for In–house Martin Marietta Fabricated Items

All of the hardware to be fabricated by Martin Marietta will be subjected to qualification testing for the EOS–AM environment. The qualification testing will consist of either a full qualification unit (which does not fly after testing) or a protoflight unit as specified in the Verification Specification (PS20005404). The Verification Specification also defines the specific tests to be performed on the hardware. There are no in–house fabrication items which Martin Marietta intends to qualify by similarity for the EOS Program. Therefore the items contained on the attached Table are all subcontractor items.

2.2 Previously Designed, Fabricated or Flown Data for Martin Marietta's Subcontractors

Several of Martin Marietta's subcontractors have proposed the use of "heritage" designs as a means of reducing the total cost to the program by eliminating qualification level testing. As many of the subcontractors have substantial flight heritage with their designs on other NASA programs, they are considered lower risk, and in many cases have not yet been put on contract. Therefore, the listing in Table I is somewhat incomplete and will be completed as each of the subcontractors is put on contract and is subjected to a Design Review.

2.3 Previously Designed, Fabricated or Flown Data Format

Table 1 is a listing of potential heritage components which will not requrie4 requalification for the EOS program. The listing is preliminary and will be updated as more information becomes available.

As stated previously, the data listing is limited to the component (black box) level except where a PWB assembly will be relying on a heritage analysis (i.e., thermal, stress, etc.) Table I, Previously Designed, Fabricated or Flown Hardware, is tabulated with the following information:

a. The item identification

b. The subassembly where the item is used in the EOS Spacecraft Bus

c. The item's manufacturer

d. The location of the manufacturer

e. Known failures, waivers or deviations

f. Modifications Required for EOS Mission

g. Comments/Other

Table I. Previously Designed, Fabricated or Flown Hardware Data

Item	Subassembly	Manufacturer	Manuf. Location	Known Failures, Waivers, Deviations	Modifications for EOS	Comments/Other
TAM	GN&C	Schonstedt Instrument Co.	Reston VA.	None	None	UARS/EUVE heritage
CSS	GN&C	Adcole	Marlboro MA	None	None	UARS/EUVE heritage
IRU	GN&C	Kearfott	Little Falls NJ	Bearing/retainer ring failure on Magellan. Problem traced to lubricant contamination.	None	SKIRU D–II package to be flown on MACS(93), XTE(95).
Mag. Torquer	GN&C	Ithaco	Ithaca NY	None	None	UARS/EUVE heritage
ESA	GN&C	Ithaco	Ithaca NY	Bearing failures on UARS, Landsat (?). problem traced to lubricant breakdown	New lubricant to be used on EOS	UARS/EUVE heritage
FSS	GN&C	Adcole	Marlboro MA	None	None	UARS/EUVE/MO heritage

Table I. Previously Designed, Fabricated or Flown Hardware Data (Continued)

Item	Subassembly	Manufacturer	Manuf. Location	Known Failures, Waivers, Deviations	Modifications for EOS	Comments/Other
Propellant Tank	Propulsion Module	Pressure Systems Inc.	Commerce CA	Waiver required for MIL–STD–1522A to permit analysis to ignore residual stress due inability to stress relieve weld due to diaphram	None	Waiver approved by NASA and WSMCR for TDRSS Program. Preliminary discussion with NASA and WSMCR for EOS indicates that same approach is acceptable.
1 lbf. Thrusters	Propulsion Module	Rocket Research	Redmond, WA	None	None	Series 5000 Satcom K1/K2
5 lbf. Thrusters	Propulsion Module	Rocket Research	Redmond, WA	None	None	GGS heritage
Pressure XDC	Propulsion Module	Statham	Old Saybrook, CT	None	None	Inmarsat, GGS, Satcom K1/K2, ASC, Spacenet, GSTAR, ASTRA–1A, BS–3A
Latch Valves	Propulsion Module	VACCO	So. ElMonte, CA	None	Slight change to flow area.	Hughes 601

Table I. Previously Designed, Fabricated or Flown Hardware Data (Continued)

Item	Subassembly	Manufacturer	Manuf. Location	Known Failures, Waivers, Deviations	Modifications for EOS	Comments/Other
Fill/Drain Valves	Propulsion Module Thermal Subsystem	OEA Pyronetics	Denver, CO	None	None	Inmarsat, GGS, Satcom K1/K2, ASC, Spacenet, GSTAR, ASTRA–1A, BS–3A
Filters	Propulsion Module	VACCO	So. ElMonte, CA	None	Change tube stub from 1/2" dia. to 3/8" dia.	Series 5000, IABS
Waveguide Switch	Comm Subsystem	COMDEV	Toronto, Canada	None	None	MO

20043203
CAGE No. 49671
30 August 1993

(Preliminary) Hazard Analysis for EOS–AM Spacecraft (PA–200)

Prepared under:
Contract NAS5–32500
NASA Goddard Space Flight Center
Greenbelt, Maryland 20771

Prepared by:
Martin Marietta Corporation
Astro Space
P.O. Box 800
Princeton, New Jersey 08543–0800

DCC082593

REVISION LOG

This log identifies those portions of this document which have been revised since the original issue. Revised portions of each page, for the current revision only, are identified by marginal striping.

Revision	Paragraph Number(s) Affected	Rev. Date	Approval
Preliminary		08/30/93	HC

TABLE OF CONTENTS

SECTION / PARAGRAPH	TITLE	PAGE
1	INTRODUCTION	1
1.1	Purpose	1
1.2	Scope	1
1.3	Applicable Documents	1
1.4	Acronym List	1
2	HAZARD RISK ASSESSMENT	3
2.1	Hazard Identification	3
2.2	Risk Assessment	3
2.2.1	System Safety Order of Precedence	3
2.2.2	Hazard Severity	4
2.2.3	Hazard Probability	4
2.2.4	Hazard Risk Assessment Matrix	4
3	EOS–AM PRELIMINARY HAZARD ANALYSIS	7
3.1	Analysis Process	7
3.2	EOS–AM Subsystems	7
3.2.1	Structures and Mechanisms Subsystem (SMS)	7
3.2.2	Thermal Control Subsystem (TCS)	7
3.2.3	Electrical Power Subsystem (EPS)	7
3.2.4	Electrical Accommodation Subsystem (EAS)	7
3.2.5	Guidance, Navigation, and Control Subsystem (GN&CS)	8
3.2.6	Propulsion Subsystem (PROPS)	8
3.2.7	Command and Data Handling Subsystem (C&DHS)	8
3.2.8	Communication Subsystem (COMMS)	8
3.2.9	Flight Software System (FSWS)	8
3.3	Analysis Results	9
4	PRELIMINARY HAZARDS ANALYSIS WORK SHEETS	11

LIST OF TABLES

TABLE	TITLE	PAGE
I	Hazard Risk Assessment Matrix	5
II	EOS–AM Hazard Assessment Risk Matrix	9

1 INTRODUCTION

This Preliminary Hazard Analysis (PHA) was prepared in accordance with the Earth Observing System (EOS) Product Assurance Requirements (PAR) document GSFC 420–05–02 Rev. A and satisfies the Contract Data Requirement PA–200, Safety Hazard Analysis.

1.1 Purpose

The Preliminary Hazard Analysis was performed to provide an initial hazard risk assessment of the EOS–AM Spacecraft. This analysis is the first step in a systematic approach employed by Martin Marietta Astro Space (Astro Space) to ensure that safety, consistent with the EOS–AM mission requirements, is designed into the system in a timely, cost–effective manner.

1.2 Scope

This analysis addresses the hazards identified prior to the Preliminary Design Review (PDR) for the design, fabrication, handling, test, transportation and launch of the EOS–AM Spacecraft's bus structure and housekeeping electronics; and to a lesser degree, the instruments carried on the bus structure. The instrument hazard portion will be expanded as information about the instruments is received.

1.3 Applicable Documents

The following documents are applicable to the preparation of this report:

GSFC 420–05–02 Rev. A	Earth Observing System (EOS) Performance Assurance Requirement for the EOS–AM Spacecraft
WSMCR 127–1	Western Space and Missile Center, Range Safety Requirements; December 1989 Revision
MIL–STD–1574A	System Safety Program for Space and Missile Systems
MIL–STD–882C	System Safety Program Requirements
MIL–STD–454M Req. 1	Standard General Requirements for Electronic Equipment

1.4 Acronym List

Ada	A program language
C&DHS	Command and Data Handling Subsystem
CDR	Critical Design Review
COMMS	Communication Subsystem
CPHTS	Capillary–Pumped Heat Transport System

EAS	Electrical Accommodation Subsystem
EED	Electro–Explosive Device
EGSE	Electrical Ground Support Equipment
EHS	Environmental Health and Safety Department
EMC	Electro–Magnetic Compatibility
EMI	Electro–Magnetic Interference
EPS	Electrical Power Subsystem
FSWS	Flight Software System
GN&CS	Guidance, Navigation and Control Subsystem
GSE	Ground Support Equipment
GSFC	Goddard Space Flight Center (NASA)
HGA	High Gain Antenna
MA	Managing Activity
MDP	Maximum Design Pressure
MEOP	Maximum Expected Operating Pressure
MLI	Multi Layer Insulation
NFPA	National Fire Protection Association
NEC	National Electric Code
PAR	Product Assurance Requirements
PDR	Preliminary Design Review
PHA	Preliminary Hazard Analysis
PROPS	Propulsion Subsystem
QC	Quality Control
RF	Radio Frequency
RWA	Reaction Wheel Assembly
SMS	Structure and Mechanism Subsystem
SSU	Sequential Shunt Unit
TCS	Thermal Control Subsystem
TDRSS	Tracking and Data Relay Satellite System
TONS	TDRSS Onboard Navigation System
TLV	Threshold Limit Value
VDC	Volts Direct Current
WSMCR	Western Space and Missile Center Requirements

2 HAZARD RISK ASSESSMENT

2.1 Hazard Identification

The first step in assessing risk is the identification of hazardous components within the design. Hazardous components include but are not limited to fuels, propellant, lasers, explosives, toxic substances, pressure systems, flammable materials and energy sources. These identified hazards may occur independently or may be the result of actions, taken by personnel or signal generation from other components within the design.

2.2 Risk Assessment

Decisions regarding resolution of identified hazards are based on assessment of the risk involved characterized by hazard severity categories and hazard probability levels. For system safety, eliminating the hazard by design is the priority, therefore a risk assessment procedure considering only hazard severity generally suffices during the early design phase to minimize risk. When hazards are not eliminated during the early design phase, a risk assessment procedure based upon the hazard probability, hazard severity, as well as risk impact, is used to establish priorities for corrective action and resolution of identified hazards. This will be the method of updating and evaluating the Hazard Analysis for CDR.

2.2.1 System Safety Order of Precedence

The methodology by which risk is eliminated from or minimized in identified hazards is called the system safety order of precedence. The order of precedence is as follows:

a. Design for minimum risk – From the first, design to eliminate hazards. If an identified hazard cannot be eliminated, reduce the associated risk to an acceptable level, as defined by the Managing Activity (MA), through design selection.

b. Incorporate safety devices – If identified hazards cannot be eliminated or their associated risk adequately reduced through design selection, that risk shall be reduced to a level acceptable to the MA through the use of fixed, automatic, or other protective safety design features or devices. Provisions shall be made for periodic functional checks of safety devices when applicable.

c. Provide warning devices – When neither design nor safety devices can effectively eliminate identified hazards or adequately reduce associated risk, devices shall be used to detect the condition and to produce an adequate warning signal to alert personnel of the hazard. Warning signals and their application shall be designed to minimize the probability of incorrect personnel reaction to the signals and shall be standardized within like types of systems.

d. Develop procedures and training – Where it is impractical to eliminate hazards through design selection or adequately reduce the associated risk with safety and warning devices, procedures and training shall be used. Procedures may include the specific call

out for the use of personal protective equipment. Precautionary notations shall be standardized as specified by the MA. Tasks and activities judged to be safety critical by the MA may require certification of personnel proficiency.

2.2.2 Hazard Severity

Hazard severity categories are defined to provide a qualitative measure of the worst credible mishap resulting from personnel error; environmental conditions; design inadequacies; procedural deficiency; or system, subsystem or component failure or malfunction. Category definitions are:

a. Catastrophic – Extensive damage or loss of major facility, loss of the spacecraft, death of personnel, or severe environmental damage.

b. Critical – Severe injury, severe occupational illness, major system loss, damage to major facility, or major environmental damage.

c. Marginal – Minor injury, minor occupational illness, or minor system damage or environmental damage.

d. Negligible – Less that minor injury, occupational illness or less than minor system or environmental damage.

2.2.3 Hazard Probability

The probability that a hazard will be created during the planned life expectancy of the system can be described in qualitatively or quantitatively potential occurrences per unit of time, events, population, items or activity. Assigning a quantitative hazard probability to a potential design or procedural hazard is generally not possible early in the design process. A qualitative hazard probability derived from research, analysis and evaluation of historical safety data from similar systems was used for this analysis. Hazard probability rankings are:

a. Frequent – Likely to occur frequently during the life of the program. Probability of occurrence ($X > 10^{-1}$).

b. Probable – Will occur several times in the life of the program. Probability of occurrence ($10^{-1} > X > 10^{-2}$).

c. Occasional – Likely to occur some time in the life of the program. Probability of occurrence ($10^{-2} > X > 10^{-3}$).

d. Remote – Unlikely but possible to occur during the life of the program. Probability of occurrence ($10^{-3} > X > 10^{-6}$).

e. Improbable – So unlikely, it can be assumed occurrence may not be experienced in the program's life. Probability of occurrence ($10^{-6} > X$).

2.2.4 Hazard Risk Assessment Matrix

In assessing the risk involved with a system the hazard severity and probability are combined to form a hazard risk assessment matrix (see Table I). This matrix assists in prioritizing identified hazards for corrective action by subdividing the matrix into three main groupings; unacceptable,

undesirable, and acceptable, either with or without the need for customer approval. The comparison of severity versus likelihood of occurrence focuses attention on the hazards which have the largest risk impact on the program independent of the hazard's severity.

Table I. Hazard Risk Assessment Matrix

HAZARD CATEGORY / FREQUENCY	1 CATASTROPHIC	2 CRITICAL	3 MARGINAL	4 NEGLIGIBLE
A) FREQUENT	1A	2A	3A	4A
B) PROBABLE	1B	2B	3B	4B
C) OCCASIONAL	1C	2C	3C	4C
D) REMOTE	1D	2D	3D	4D
E) IMPROBABLE	1E	2E	3E	4E

The Hazard Risk Index below for the Hazard Risk Assessment Matrix identifies where design priority should be focused to eliminate/control hazards thereby reducing the risk factor for the program.

1A. 1B. 1C. 2A. 2B.	Unacceptable
1D. 2C. 3A. 3B.	Undesirable (MA decision required)
1E. 2D. 2E. 3C. 3D. 3E. 4A. 4B.	Acceptable with review by MA
4C. 4D. 4E.	Acceptable without review

(This page intentionally left blank.)

3 EOS–AM PRELIMINARY HAZARD ANALYSIS

3.1 Analysis Process

The EOS–AM subsystems were individually evaluated for hazards and their contributing factors. The identified hazards from each subsystem were then evaluated for hazard severity, probability of occurrence and operational constraints using the guidelines of the PAR. This information was then entered on the PHA worksheet along with applicable safety requirements. Design features already incorporated into the bus design were identified along procedural safety requirements.

3.2 EOS–AM Subsystems

3.2.1 Structures and Mechanisms Subsystem (SMS)

The SMS is designed to structurally support the instruments, equipment modules, and other Spacecraft bus equipment. It provides the overall framework for mounting and positioning the instruments while maintaining precise pointing and alignment. The primary structure of the Spacecraft is constructed of lightweight, graphite–epoxy tubular members with titanium node fittings that provide a stable framework for Spacecraft operations throughout the mission life. Mechanisms such as the solar array drive and HGA deployment system provide the means to operate the solar array and deploy the high–gain antenna.

3.2.2 Thermal Control Subsystem (TCS)

The TCS will maintain all Spacecraft component and instrument interfaces within allowable thermal limits. Passive thermal control techniques, used wherever possible, include multilayer insulation (MLI), isolators and thermal finishes. Heaters are used where necessary. Heat–pipe radiator panels are used in the equipment modules to reject the heat dissipated by Spacecraft components. A capillary–pumped heat transport system (CPHTS) provides thermal control to those instruments which do not have sufficient radiator area. Temperature telemetry data is provided throughout the Spacecraft in order to monitor the performance of this subsystem.

3.2.3 Electrical Power Subsystem (EPS)

The EPS provides all Spacecraft instruments and Spacecraft bus equipment with electrical power during all mission phases. The main power bus will normally be regulated to 120 Vdc. The 120 Vdc system is driven by the high instrument power requirements and the volume constraints of the launch vehicle fairing. Power is generated by a single–wing photovoltaic solar–cell array. Rechargeable Nickel–Hydrogen (NiH_2) batteries are used to store power, and the excess solar array power is controlled through the use of a Sequential Shunt Unit (SSU).

3.2.4 Electrical Accommodation Subsystem (EAS)

The EAS provides all inter–subsystem and inter–component electrical connection, and implements the system and subsystem level grounding and EMC requirements of the EOS Spacecraft. Additionally, the EAS provides the electronics for deployment mechanisms used on the Spacecraft such as the arming and firing circuits of the pyrotechnic release mechanisms.

3.2.5 Guidance, Navigation, and Control Subsystem (GN&CS)

The GN&CS determines the Spacecraft orbit and attitude, autonomously controls the attitude, and controls actuators for orbit adjustment and appendage pointing. Four reaction–wheel assemblies (RWAs) are used for primary attitude control. Three magnetic torque rods are used for momentum unloading. Thrusters and/or the RWAs are used to perform slew maneuvers. Navigation services will be supported primarily via the TDRSS Onboard Navigation System (TONS). In all on–orbit Spacecraft modes except Safe Mode, the GN&CS attitude determination and control algorithms are executed by flight software in the C&DHS Spacecraft Controls Computer.

3.2.6 Propulsion Subsystem (PROPS)

The PROPS provides thrust to support attitude and orbit control during all mission phases following the Launch/Ascent Phase. After orbit achievement, the propulsion module provides delta–V impulses for orbit maintenance (drag make–up and inclination correction) and attitude control impulses for backup momentum management and attitude control. Thruster operations are controlled in accordance with commands received from the GN&CS or from ground controllers via the C&DHS. Hydrazine is used as a monopropellant for the attitude control and delta–V thrusters.

3.2.7 Command and Data Handling Subsystem (C&DHS)

The C&DH subsystem provides telemetry data acquisition and storage, collection, formatting, routing, and storage of science data for downlink, generation of time and frequency references, and distribution of real–time and stored commands. The C&DHS will also provide hard–line telemetry to the launch vehicle umbilical interface for pre–launch check–out.

3.2.8 Communication Subsystem (COMMS)

The COMMS provides all external interfaces for Spacecraft data and tracking signals. It receives and demodulates all command data destined for Spacecraft subsystems and instruments, modulates and transmits all data from Spacecraft subsystems and instruments which is destined for the ground, and receives, decodes, and transmits, as appropriate, all signals used for Spacecraft tracking.

3.2.9 Flight Software System (FSWS)

The flight software system (FSWS) consists of both software and firmware, distributed across C&DHS components. The FSWS will monitor, control and provide the necessary services and mission support needed to sustain the Spacecraft throughout its mission. The FSWS is primarily implemented in the Ada programming language, although certain processor functions may be programmed in assembly language.

3.3 Analysis Results

The preliminary hazard analysis identified 42 hazards associated with the spacecraft design and launch preparation; 33 spacecraft bus and 9 instrument. The EOS–AM Hazard Risk Assessment Matrix (Table II) presents the distribution of the identified hazards by hazard severity and frequency of occurrence. None of the identified hazards fall into the unacceptable area on the matrix and only two identified hazards fall into the undesirable area. The undesirable hazards are:

- electrical energy; high voltage and high current sources
- handling of fully charged nickel–hydrogen batteries

Table II. EOS–AM Hazard Assessment Risk Matrix

HAZARD CATEGORY / FREQUENCY	1 CATASTROPHIC	2 CRITICAL	3 MARGINAL	4 NEGLIGIBLE
A) FREQUENT	–	–	–	–
B) PROBABLE	–	–	–	–
C) OCCASIONAL	–	20	13 I–2, I–3, I–5	–
D) REMOTE	2	1,3,10,16,17,22, 23,24,25,27,29, 30,32 I–6, I–7	9,11,14,15,18,19, 26,28,31 I–1, I–4, I–8, I–9	–
E) IMPROBABLE	4,5,7,8	6,12,21	33	–

All of the identified hazards will undergo further investigation as to their severity and frequency of occurrence to determine their true position on the matrix. Safety will work with the designers to eliminate the hazard or mitigate the hazard severity thus repositioning it on the matrix in one of the acceptable areas thus reducing program risk.

(This page intentionally left blank.)

4 PRELIMINARY HAZARDS ANALYSIS WORK SHEETS

The following pages contain the PHA work sheets.

PROJECT: EOS
PROJECT PHASE: PDR
SYSTEM/SUBSYSTEM: Electrical Pwr S/S

HAZARD ANALYSIS

DATE: 30 August 1993
REVISION:
PAGE: 12 OF 35

HAZARD IDENTIFICATION AND EVALUATION				DESIGN PREVENTIVE MEASURES				PROCEDURAL PREVENTIVE MEASURES		
ITEM NO.	HAZARD: Nickel Hydrogen Battery / PRODUCING FACTORS	HAZARD LEVEL	OCCURENCE PROBABILITY	DESIGN SAFETY REQUIREMENTS AND DESIGN FEATURES: SAFETY REQUIREMENTS	DESIGN SAFETY REQUIREMENTS AND DESIGN FEATURES: DESIGN FEATURES	ADEQUACY OF DESIGN FEATURES: SAFETY/OPERATION TESTS	ADEQUACY OF DESIGN FEATURES: DESIGN ANALYSIS	PROCEDURAL SAFETY REQUIREMENTS/ MEASURES	PROCEDURAL VERIFICATION	DISPOSITION AND / OR REMARKS
1	Electrolyte leakage or hydrogen gas leakage caused by: – overcharging of the battery – battery heater stuck in "ON" state raising temperature and pressure – internal/external short – material failure – weld failure – collision with other flight hardware, EGSE or tools	II	D	EOS contract; battery shall have a Safety Factor >3.0 x MDP WSMCR 127–1 para. 3.14.5.5 battery shall have pressure relief devices or safety factor > 4.0 x MDP WSMCR 127–1 para. 3.14.5.4; limit charging rate WSMCR 127–1 para. 3.14.5.6; case retention if rupture occurs MIL–STD–454 Req. 1, para, 4.4; guards/shields over voltage/current sources	The battery is design for a Safety Factor of 3.4 x MDP The battery does not contain pressure relief devices however, it is designed to Leak Before Burst Heaters are sized to prevent excessive temperature/ pressure raises within the battery should the heater latch up in the ON state A shield is designed to cover the batteries to prevent inadvertent contact Battery charging rates are designed to preclude thermal runaway failures The batteries are housed in sleeves and have a shield over the top both of which minimize the damage effects should a battery rupture	Batteries have demonstrated a Safety Factor of 3.6 x MDP during qualification testing	Energy dissipated from a failed "ON" heater is not enough to cause a battery to rupture or leak	All battery welds are X–rayed during manufacturing Vendor verifies quality of material prior to manufacturing the battery housing Operators are trained in the proper methods of handling Nickel Hydrogen batteries Batteries are only handled in a discharged state, which relates to low pressure		Have developed a monitoring system to shut down battery charging if the charging rate, temperature or pressure are too high

PROJECT: EOS	HAZARD ANALYSIS	DATE: 30 August 1993
PROJECT PHASE: PDR		REVISION:
SYSTEM/SUBSYSTEM: Electrical Pwr S/S		PAGE: 13 OF 35

HAZARD IDENTIFICATION AND EVALUATION				DESIGN PREVENTIVE MEASURES				PROCEDURAL PREVENTIVE MEASURES		
ITEM NO. 1	HAZARD: Nickel Hydrogen Battery	HAZARD LEVEL	OCCURENCE PROBABILITY	DESIGN SAFETY REQUIREMENTS AND DESIGN FEATURES		ADEQUACY OF DESIGN FEATURES				
	PRODUCING FACTORS			SAFETY REQUIREMENTS	DESIGN FEATURES	SAFETY/OPERATION TESTS	DESIGN ANALYSIS	PROCEDURAL SAFETY REQUIREMENTS/ MEASURES	PROCEDURAL VERIFICATION	DISPOSITION AND / OR REMARKS
2	Personnel attempting to switch batteries prior to full discharge	I	D					Martin Marietta's procedures require batteries to be fully discharged prior to removal		Procedures and training material will be reviewed to ensure the Martin Marietta policy is properly addressed
3	Dead short across the battery terminals cause explosion or permanent damage to battery	II	D		Battery panels are designed with a non-conductive shield over the the battery terminals to minimize accidental contact			Procedures will require that the battery shields be in place prior to energizing the batteries When working over the batteries, tethered tools will be required		
4	Mating battery discharge connectors cause a spark which could ignite a flammable vapor if present	I	E		The battery panel is equipped with a relay network to dead face the discharge connector. After mating the EGSE can close the relays permitting discharge.					

DCC082593

20043203
30 August 1993

PROJECT: EOS	HAZARD ANALYSIS	DATE: 30 August 1993
PROJECT PHASE: PDR		REVISION:
SYSTEM/SUBSYSTEM: Propulsion		PAGE: 14 OF 35

HAZARD IDENTIFICATION AND EVALUATION				DESIGN PREVENTIVE MEASURES				PROCEDURAL PREVENTIVE MEASURES		
ITEM NO.	HAZARD: Hydrazine / PRODUCING FACTORS	HAZARD LEVEL	OCCURENCE PROBABILITY	DESIGN SAFETY REQUIREMENTS AND DESIGN FEATURES		ADEQUACY OF DESIGN FEATURES				
				SAFETY REQUIREMENTS	DESIGN FEATURES	SAFETY/OPERATION TESTS	DESIGN ANALYSIS	PROCEDURAL SAFETY REQUIREMENTS/ MEASURES	PROCEDURAL VERIFICATION	DISPOSITION AND / OR REMARKS
5	Propellant tank fails, leaking hazardous materials into the work area. Rupture may produce shrapnel which would damage flight hardware and injure personnel. Cause: – elevated temperatures and or overfilling resulting in tank over–pressurization – material imperfection – collision with flight hardware, GSE, falling tools – weld failure	I	E	WSMCR 127–1 para. 3.12.11; a 2:1 safety factor must not be violated in the pressure vessel by any combination of pressure and dynamically induced strain WSMCR 127–1 para. 3.12.5; monitoring of hazardous material WSMCR 127–1 para. 3.12.8; hydrostatic testing of pressure vessels WSMCR 127–1 para. 3.12.10.1; an assembled system proof test shall be performed at >1.25 x MEOP WSMCR 127–1 para. 3.12.10.3; inspection for damage due to transportation WSMCR 127–1 para. 3.12.4; use of qualified tank and tank design	Tank is designed to the worst case operating temperature; a safety factor of 1.5 x MEOP is applied A shield is designed to be placed over the propulsion module to prevent falling objects from striking the tank. The shield is removed when the equipment modules are installed on the bus structure. The propulsion tank is designed and tested to the to the requirements of MIL–STD–1522A (exception: see remarks column)		Actual burst testing of the tank has proven burst safety factor of 2 x MEOP	All material is inspected prior to manufacturing the tank. Lot sample of the material is used for burst testing All welds are X–rayed The tank is proof tested to 1.25 x MEOP Hand tools used above the propulsion module will be tethered Personnel are instructed in the proper handling of the tank		Temperature and pressure sensors are used to monitor the tank when the propellant is loaded Hydrazine sensors are placed around the spacecraft once the propellant has been introduced A deviation against MIL–STD–1522A is planned for the propulsion tank equatorial weld which cannot be thermal stress relieved because of the bladder material

PROJECT: EOS	HAZARD ANALYSIS	DATE: 30 August 1993
PROJECT PHASE: PDR		REVISION:
SYSTEM/SUBSYSTEM: Propulsion		PAGE: 15 OF 35

HAZARD IDENTIFICATION AND EVALUATION				DESIGN PREVENTIVE MEASURES						
				DESIGN SAFETY REQUIREMENTS AND DESIGN FEATURES		ADEQUACY OF DESIGN FEATURES		PROCEDURAL PREVENTIVE MEASURES		
ITEM NO.	HAZARD: Hydrazine PRODUCING FACTORS	HAZARD LEVEL	OCCURENCE PROBABILITY	SAFETY REQUIREMENTS	DESIGN FEATURES	SAFETY/OPERATION TESTS	DESIGN ANALYSIS	PROCEDURAL SAFETY REQUIREMENTS/ MEASURES	PROCEDURAL VERIFICATION	DISPOSITION AND / OR REMARKS
6	Residual hydrazine in tank after off-loading. Possibility of spillage on to flight hardware or exposing personnel to toxic materials	II	E	WSMCR 127-1 para. 3.11.7; off-loading	Propulsion tank is designed with a low point drain and fill valve, in the vertical position >99% of all hydrazine can be removed. In horizontal position >95% can be removed					Develop procedures to remove residual hydrazine from the tank and lines in the event of an off-load
7	During fueling operation, spark from electrical harness ignites fuel causing explosion or fire	I	E	WSMCR 127-1 para. 3.11.1.2; sources of electrical arcing near fuel				All electrical services to the spacecraft will be turned off prior to beginning fueling operations Harness and surfaces adjacent to the fill and drain valve will be covered with a bib to preclude contact with hydrazine should it splash or dribble out during dismating of the fuel hose Batteries will be let down prior to loading or off-loading propellant on the spacecraft.		

DCC082593

20043203
30 August 1993

PROJECT: EOS	HAZARD ANALYSIS	DATE: 30 August 1993
PROJECT PHASE: PDR		REVISION:
SYSTEM/SUBSYSTEM: Propulsion		PAGE: 16 OF 35

HAZARD IDENTIFICATION AND EVALUATION				DESIGN PREVENTIVE MEASURES				PROCEDURAL PREVENTIVE MEASURES		
ITEM NO.	HAZARD: Hydrazine	HAZARD LEVEL	OCCURENCE PROBABILITY	DESIGN SAFETY REQUIREMENTS AND DESIGN FEATURES		ADEQUACY OF DESIGN FEATURES				
	PRODUCING FACTORS			SAFETY REQUIREMENTS	DESIGN FEATURES	SAFETY/OPERATION TESTS	DESIGN ANALYSIS	PROCEDURAL SAFETY REQUIREMENTS/ MEASURES	PROCEDURAL VERIFICATION	DISPOSITION AND / OR REMARKS
8	Weakening of the propulsion system components resulting in the release of hydrazine damaging flight hardware or injury to person	I	E	WSMCR 127–1 para. 3.11.1.3; material compatibility with propellant	All materials used in the propulsion system are compatible with hydrazine. Material selected for the propulsion system are compatible with each other or are provided with a coating to preclude galvanic corrosion					
9	Unexpected condition (ie: storm or hardware failure) during the fuel loading results in the need to remove the fuel or back out to a safe state	III	D	WSMCR 127–1 para. 3.10.4; back out procedures				Procedures will be developed to facilitate the backing out of the propellant loading to achieve a safe state		Procedures to be developed later in the program based on experience gained from other Martin Marietta programs
10	Propulsion components leaking hazardous materials into the work area. Component rupture may produce shrapnel which would damage flight hardware and injure personnel. Cause: – elevated temperatures resulting in over–pressurization – material imperfection – collision with flight hardware, GSE, falling tools – weld failure	II	D	WSMCR 127–1 para. 3.12.10; design in accordance with MIL–STD–1552A MIL–STD–1522A para. 5.3.1; component safety factors WSMCR 127–1 para. 3.12.10.1; proof test assembly at 1.5 x MDP	Components are designed to the worst case pressures and then have a safety factor of 2.5 x MDP assigned			During hydrazine loading, all unnecessary personnel are evacuated from the area. After loading is completed, there will be a restriction on what personnel are permitted around the spacecraft.		

PROJECT: EOS	HAZARD ANALYSIS	DATE: 30 August 1993
PROJECT PHASE: PDR		REVISION:
SYSTEM/SUBSYSTEM: Propulsion		PAGE: 17 OF 35

HAZARD IDENTIFICATION AND EVALUATION				DESIGN PREVENTIVE MEASURES				PROCEDURAL PREVENTIVE MEASURES		
ITEM NO.	HAZARD: Hydrazine	HAZARD LEVEL	OCCURENCE PROBABILITY	DESIGN SAFETY REQUIREMENTS AND DESIGN FEATURES		ADEQUACY OF DESIGN FEATURES				
	PRODUCING FACTORS			SAFETY REQUIREMENTS	DESIGN FEATURES	SAFETY/OPERATION TESTS	DESIGN ANALYSIS	PROCEDURAL SAFETY REQUIREMENTS/ MEASURES	PROCEDURAL VERIFICATION	DISPOSITION AND / OR REMARKS
11	Inattentive actions by personnel allow rags with hydrazine and other chemicals to lie around creating a potential fire hazard	III	D	WSMCR 127-1 para. 3.11.3; good housekeep-. ing				Procedures call out the proper disposal of used rags/cloths which may have been in contact with hydrazine		Personnel are trained in good housekeeping practices. Approved containers are provided in the assembly areas for used rags/cloths
12	Fill and drain valve does not seal resulting in the release of hydrazine	II	E	WSMCR 127-1 para. 3.11.14; pre-vent toxic effluents from entering atmosphere	The fill and drain valve has three seals to prevent the release of hydrazine Fill and drain values are proof and leak tested.					

DCC082593

20043203
30 August 1993

PROJECT: EOS	HAZARD ANALYSIS	DATE: 30 August 1993
PROJECT PHASE: PDR		REVISION:
SYSTEM/SUBSYSTEM: Propulsion		PAGE: 18 OF 35

HAZARD IDENTIFICATION AND EVALUATION				DESIGN PREVENTIVE MEASURES				PROCEDURAL PREVENTIVE MEASURES		
ITEM NO.	HAZARD: Electrical / PRODUCING FACTORS	HAZARD LEVEL	OCCURENCE PROBABILITY	DESIGN SAFETY REQUIREMENTS AND DESIGN FEATURES		ADEQUACY OF DESIGN FEATURES				
				SAFETY REQUIREMENTS	DESIGN FEATURES	SAFETY/OPERATION TESTS	DESIGN ANALYSIS	PROCEDURAL SAFETY REQUIREMENTS/ MEASURES	PROCEDURAL VERIFICATION	DISPOSITION AND / OR REMARKS
13	Control inhibits are by-passed because: – connectors are improperly mated – contamination on the connector – bent pins shorting out signal – software	III	C	WSMCR 127-1 para. 3.14.3.1; connector keying WSMCR 127-1 para. 3.14.5.2; prevent reverse polarity	Connectors are individually keyed or labeled to preclude mismating Connectors are the scoop proof type to preclude bending of pins			Prior to mating all connectors are visually checked for bent pins and for contamination on the connector facing and pins		
14	The presence of 120 VDC is a hazard to personnel and flight hardware if inadvertent contact is made	III	D	WSMCR 127-1 para. 3.14.2; adhere to the NEC NFPA 70, NEC 110-17; shielding of power sources	Sources for 120 VDC contact are shielded from inadvertent contact Hot leads are on female connectors			Procedures will identify high voltage sources Personnel will be familiar with the system and be able to identify high voltage sources as they work on the hardware		Martin Marietta assembly procedures prohibit the mating of live circuits

PROJECT: EOS	HAZARD ANALYSIS	DATE: 30 August 1993
PROJECT PHASE: PDR		REVISION:
SYSTEM/SUBSYSTEM: Electrical Accommodation		PAGE: 19 OF 35

HAZARD IDENTIFICATION AND EVALUATION				DESIGN PREVENTIVE MEASURES				PROCEDURAL PREVENTIVE MEASURES		
ITEM NO.	HAZARD: Pyro Bus	HAZARD LEVEL	OCCURENCE PROBABILITY	DESIGN SAFETY REQUIREMENTS AND DESIGN FEATURES		ADEQUACY OF DESIGN FEATURES				
	PRODUCING FACTORS			SAFETY REQUIREMENTS	DESIGN FEATURES	SAFETY/OPERATION TESTS	DESIGN ANALYSIS	PROCEDURAL SAFETY REQUIREMENTS/ MEASURES	PROCEDURAL VERIFICATION	DISPOSITION AND / OR REMARKS
15	EEDs inadvertently activated due to: – improper shielding of the pyro bus – routing the pyro bus too close to other harnesses – shorting due to worn insulation resulting from excessive handling or insulation breakdown	III	D	WSMCR 127–1 para. 3.13.3.2.4.1; Shielding of pyro harnesses shall provide >20 dB attenuation WSMCR 127–1 para. 3.13.3.2.4.3; firing circuit conductors must be twisted shielded pairs	Pyro harnesses are designed to provide 20 dB of signal reduction Harness wiring consists of twisted shield pairs with grounded shielding Wires are derated to 50% of their current carrying capability There are three (3) inhibits to preclude EED activation, plus the Arming plug			Operators are trained in proper handling techniques of harnesses and pyrotechnic devices		

DCC082593

20043203
30 August 1993

PROJECT: EOS

PROJECT PHASE: PDR

SYSTEM/SUBSYSTEM: Electrical Accommodation

HAZARD ANALYSIS

DATE: 30 August 1993

REVISION:

PAGE: 20 OF 35

HAZARD IDENTIFICATION AND EVALUATION				DESIGN PREVENTIVE MEASURES				PROCEDURAL PREVENTIVE MEASURES		
ITEM NO.	HAZARD: Pyro Bus	HAZARD LEVEL	OCCURENCE PROBABILITY	DESIGN SAFETY REQUIREMENTS AND DESIGN FEATURES		ADEQUACY OF DESIGN FEATURES				
	PRODUCING FACTORS			SAFETY REQUIREMENTS	DESIGN FEATURES	SAFETY/OPERATION TESTS	DESIGN ANALYSIS	PROCEDURAL SAFETY REQUIREMENTS/ MEASURES	PROCEDURAL VERIFICATION	DISPOSITION AND / OR REMARKS
16	Generation of hazardous commands or the generation of safing signals prevented because of: – conductive or non-conductive contamination or bent pins on connectors – improper wiring of connectors – wire shorts due to excessive handling and routing around sharp objects	II	D	WSMCR 127-1 para. 3.13.3.1.2; safety critical systems shall be single fault tolerant WSMCR 127-1 para. 3.13.7; stray voltage testing WSMCR 127-1 para. 3.14.3.1; key connectors and labeling	There are three (3) inhibits to preclude EED activation, plus Arming plug Connectors are keyed and labeled to preclude mismating			Acceptance procedure for harnesses require all wires connections be checked Connectors will have stray voltage tests performed to insure voltages are not directed to unwanted places Insulation breakdown testing is performed on all harnesses Assembly procedures require personnel to visually check connector for contamination and bent pins		

PROJECT: EOS	HAZARD ANALYSIS	DATE: 30 August 1993
PROJECT PHASE: PDR		REVISION:
SYSTEM/SUBSYSTEM: Electrical Accommodation		PAGE: 21 OF 35

HAZARD IDENTIFICATION AND EVALUATION				DESIGN PREVENTIVE MEASURES				PROCEDURAL PREVENTIVE MEASURES		
ITEM NO.	HAZARD: Pyro Bus	HAZARD LEVEL	OCCURENCE PROBABILITY	DESIGN SAFETY REQUIREMENTS AND DESIGN FEATURES		ADEQUACY OF DESIGN FEATURES				
	PRODUCING FACTORS			SAFETY REQUIREMENTS	DESIGN FEATURES	SAFETY/OPERATION TESTS	DESIGN ANALYSIS	PROCEDURAL SAFETY REQUIREMENTS/ MEASURES	PROCEDURAL VERIFICATION	DISPOSITION AND / OR REMARKS
17	Electro-Explosive Devices are inadvertently activated due to: – improper handling – exposure to EMI – testing or operator error energizing the device at the wrong time	II	D	WSMCR 127-1 para. 3.13.3.2.4.1; isolation and shielding WSMCR 127-1 para. 3.13.3.1.2; fault tolerance requirements WSMCR 127-1 para. 3.13.3; design in accordance with MIL-STD-1576 MIL-STD-1576 para. 5.2.a; 20 dB below min. no-fire MIL-STD-1576 para. 5.2d; 360 degree shielding MIL-STD-1576 para. 4.2.1; fault tolerance MIL-STD-1576 para. 6.10; verification of EMC (perform test)	Pyro circuits are routed separately from all other harness to prevent crosstalk Pyro circuits are designed to attenuate stray signals by >20 dB Three (3) independent signals plus installation of the Arming plug are required to activate the pyro circuits. Telemetry data provides status of inhibits EEDs and their harness are designed to provide 360 degree shielding			Detailed procedures for handling EEDs will be developed and followed. WTR will approve all procedures prior to their use When handling EEDs, the facility and surrounding area will be made RF quiet During installation of EEDs, all power is turned off in the spacecraft Battery power switch is set at DISABLE for pyro circuitry. Verify Safe plug is installed During the integration cycle, the pyro circuit will be tested to verify compliance with EMC requirements		

DCC082593

20043203
30 August 1993

PROJECT: EOS
PROJECT PHASE: PDR
SYSTEM/SUBSYSTEM: Thermal

HAZARD ANALYSIS

DATE: 30 August 1993
REVISION:
PAGE: 22 OF 35

HAZARD IDENTIFICATION AND EVALUATION				DESIGN PREVENTIVE MEASURES				PROCEDURAL PREVENTIVE MEASURES		
ITEM NO.	HAZARD: Anhydrous Ammonia	HAZARD LEVEL	OCCURENCE PROBABILITY	DESIGN SAFETY REQUIREMENTS AND DESIGN FEATURES		ADEQUACY OF DESIGN FEATURES				
	PRODUCING FACTORS			SAFETY REQUIREMENTS	DESIGN FEATURES	SAFETY/OPERATION TESTS	DESIGN ANALYSIS	PROCEDURAL SAFETY REQUIREMENTS/ MEASURES	PROCEDURAL VERIFICATION	DISPOSITION AND / OR REMARKS
18	Component leakage releasing anhydrous ammonia into the work area, caused by: – improper weld – fractured joint or component due to over pressurization or excessive mechanical flexing of thermal components – dissimilar metals resulting in galvanic corrosion	III	D	WSMCR 127–1 para. 3.10.2; TLV exposure WSMCR 127–1 para. 3.10.3; personnel protective WSMCR 127–1 para. 3.12.4; structural analysis WSMCR 127–1 para. 3.12.11; safety factors WSMCR 127–1 para. 3.10.4; back out procedures	The systems containing anhydrous ammonia meet the requirements of –1522A for pressure vessels and components The design safety factor for heat pipes is 2.5 x MEOP The design contains flex hosing at critical bends to permit movement of the plumbing system without placing excessive mechanical motion on the system The thermal system uses the EOS bus structure to provide support to pressure lines and components			X–ray all welds in the ammonia subsystem Design the subsystem to proper safety factor levels Personnel working with ammonia components will wear protective equipment as directed by EHS All material used in the ammonia system and adjacent to it will be checked for compatibility with ammonia Areas in which ammonia is used will contain ammonia sensors Procedures will be developed with safe means to back out to a safe position should something interrupt normal activity flow		

PROJECT: EOS	HAZARD ANALYSIS	DATE: 30 August 1993
PROJECT PHASE: PDR		REVISION:
SYSTEM/SUBSYSTEM: Communications		PAGE: 23 OF 35

HAZARD IDENTIFICATION AND EVALUATION				DESIGN PREVENTIVE MEASURES				PROCEDURAL PREVENTIVE MEASURES		
ITEM NO.	HAZARD: RF Radiation	HAZARD LEVEL	OCCURENCE PROBABILITY	DESIGN SAFETY REQUIREMENTS AND DESIGN FEATURES		ADEQUACY OF DESIGN FEATURES				
	PRODUCING FACTORS			SAFETY REQUIREMENTS	DESIGN FEATURES	SAFETY/OPERATION TESTS	DESIGN ANALYSIS	PROCEDURAL SAFETY REQUIREMENTS/ MEASURES	PROCEDURAL VERIFICATION	DISPOSITION AND / OR REMARKS
19	Transmitter radiating with personnel in the area caused by: – test glitch activating transmitter – miswire by passes transmitter inhibit – bent pin over rides inhibit – stay out areas not clearly marked – test personnel failed to visually check area prior to energizing transmitter	III	D	WSMCR 127–1 para. 3.8.3.2; protection from inadvertent activation WSMCR 127–1 para. 3.13.3.1.2; single fault tolerance system required for critical hazards WSMCR 127–1 para. 3.8.1; maintain lowest practical level of hazard exposure WSMCR 127–1 para. 3.8.1.2; fail safe system will be incorporated so that accidental operation is prevented WSMCR 127–1 para. 3.14.1.1; safety critical redundant systems may not pass through the same connector WSMCR 127–1 para. 3.14.3.1; connector keyed, marked to preclude mismating	Scoop proof type connectors will be used to preclude bent pins EGSE will be designed to require operator intervention for activation of hazardous commands Circuits will be single fault tolerant			RF absorbers are mounted on all horns when not in special transmitter testing All harnesses will be checked for insulation breakdown Warning light to be activated to alert personnel that transmit testing is in process and to stay out of the roped area Operators will perform a visual check to ensure area is clear prior to energizing the transmitter		All operators in the assembly area are trained in the hazards associated with the spacecraft and safety precautions that must be taken. All personnel entering the assembly area will be instructed as to the warnings used and proper response to them. Martin Marietta personnel are experienced working with transmitters in an assembly area and know the precautions necessary to ensure safety.

DCC082593

20043203
30 August 1993

PROJECT: EOS
PROJECT PHASE: PDR
SYSTEM/SUBSYSTEM: Communications

HAZARD ANALYSIS

DATE: 30 August 1993
REVISION:
PAGE: 24 OF 35

HAZARD IDENTIFICATION AND EVALUATION				DESIGN PREVENTIVE MEASURES				PROCEDURAL PREVENTIVE MEASURES		
ITEM NO.	HAZARD: Electrical / PRODUCING FACTORS	HAZARD LEVEL	OCCURENCE PROBABILITY	DESIGN SAFETY REQUIREMENTS AND DESIGN FEATURES		ADEQUACY OF DESIGN FEATURES				
				SAFETY REQUIREMENTS	DESIGN FEATURES	SAFETY/OPERATION TESTS	DESIGN ANALYSIS	PROCEDURAL SAFETY REQUIREMENTS/ MEASURES	PROCEDURAL VERIFICATION	DISPOSITION AND / OR REMARKS
20	Presence of high energy circuits, 120 VDC and high current sources, present a hazard to flight hardware and personnel. Causes: – miswire – hot line on the male side of connector instead of female – bent pin – unshielded terminal – damaged insulation on wire or terminal	II	C	MIL–STD–454 Req. 1, para. 4.4.6; energized pins at disconnect WSMCR 127–1 para. 3.14.3.1; connector keying WSMCR 127–1 para. 3.14.5.2; prevent reverse polarity WSMCR 127–1 para. 3.14.2; adhere to the NEC NFPA 70, NEC 110–17; shielding of power sources	Connectors have hot leads on the female side of the connector Connectors are designed using scoop proof technology to preclude bent pins Connectors are individually keyed or labeled to preclude mismating High energy source contacts are shielded from inadvertent contact			After assembly the harnesses will be tested to ensure no insulation break down has occurred during assembly Prior to mating all connectors are visually checked for bent pins and for contamination on the connector facing and pins Procedures will identify high energy sources Personnel will be familiar with the system and be able to identify high energy sources as they work on the hardware		Martin Marietta assembly procedures prohibit the mating of live circuits
21	Connector pins are composed of a beryllium alloy. Beryllium is a toxic material	II	E	WSMCR 127–1 para. 3.10.1; use of toxic materials						Non–issue; literature research has found that the amount of beryllium dust generated when used as an alloy in wire or pins does not pose a health hazard to personnel

PROJECT: EOS	HAZARD ANALYSIS	DATE: 30 August 1993
PROJECT PHASE: PDR		REVISION:
SYSTEM/SUBSYSTEM: C&DH		PAGE: 25 OF 35

HAZARD IDENTIFICATION AND EVALUATION				DESIGN PREVENTIVE MEASURES						
				DESIGN SAFETY REQUIREMENTS AND DESIGN FEATURES		ADEQUACY OF DESIGN FEATURES		PROCEDURAL PREVENTIVE MEASURES		
ITEM NO.	HAZARD: Hazardous signal generation / PRODUCING FACTORS	HAZARD LEVEL	OCCURENCE PROBABILITY	SAFETY REQUIREMENTS	DESIGN FEATURES	SAFETY/OPERATION TESTS	DESIGN ANALYSIS	PROCEDURAL SAFETY REQUIREMENTS/ MEASURES	PROCEDURAL VERIFICATION	DISPOSITION AND / OR REMARKS
22	Generation of hazardous commands or the removal of safety inhibits caused by: – bent connector pins – contamination on the face of the connector shorting pins together	II	D		Scoop proof connector will be used in the design of EOS harnesses Assign connector pin placement that hazardous signals cannot be easily generated by shorting			Prior to mating all pins are visually check for straightness Prior to mating all connectors are visually check for any type of contamination		
23	Power remains on a supposedly dead connector resulting in an electrical shock or damage to flight hardware	II	D	MIL-STD-454 Req. 1, para. 4.4.6; energized pins at disconnect	Connectors and harness design place the 'hot' side of the connector on the female side Scoop proof connector will be used in the design of EOS harnesses			Prior to mating all pins are visually check for straightness Prior to mating all connectors are visually check for any type of contamination		
24	Inability to re-safe an inhibit after testing a circuit may lead to the activation of an unplanned operation or hazardous event; causes: – bent pin – conductive or non-conductive contamination on the connector	II	D	WSMCR 127-1 para. 3.13.3.1.2: fault tolerances	Assign connector pin placement that hazardous signals cannot be easily generated by shorting			Prior to mating all pins are visually check for straightness Prior to mating all connectors are visually check for any type of contamination		

DCC082593

20043203
30 August 1993

PROJECT: EOS	HAZARD ANALYSIS	DATE: 30 August 1993
PROJECT PHASE: PDR		REVISION:
SYSTEM/SUBSYSTEM: C&DH		PAGE: 26 OF 35

HAZARD IDENTIFICATION AND EVALUATION				DESIGN PREVENTIVE MEASURES				PROCEDURAL PREVENTIVE MEASURES		
ITEM NO.	HAZARD: Hazardous signal generation	HAZARD LEVEL	OCCURENCE PROBABILITY	DESIGN SAFETY REQUIREMENTS AND DESIGN FEATURES		ADEQUACY OF DESIGN FEATURES				
	PRODUCING FACTORS			SAFETY REQUIREMENTS	DESIGN FEATURES	SAFETY/OPERATION TESTS	DESIGN ANALYSIS	PROCEDURAL SAFETY REQUIREMENTS/ MEASURES	PROCEDURAL VERIFICATION	DISPOSITION AND / OR REMARKS
25	Operational coding results in hazardous operations initiated when not expected ; causes: – system glitch causes generation of hazardous operation code – coding of hazardous and non–hazardous operations too similar, loss of bit changes operation selection	II	D	WSMCR 127–1, Appendix A3–4, para. 4.46: critical addresses shall be sufficiently different from non–critical addresses that a single bit failure will not allow access to critical functions	Hazardous operational codes are unique in coding to preclude single bit loss causing activation Hazardous operational codes are stored in a library during ground testing and require operator intervention for activation					Critical operations will have their addresses and codes checked to verify uniqueness in coding that a single bit change of a non–critical address will not activate the critical command

PROJECT: EOS	HAZARD ANALYSIS	DATE: 30 August 1993
PROJECT PHASE: PDR		REVISION:
SYSTEM/SUBSYSTEM: Structure/Mechanism		PAGE: 27 OF 35

HAZARD IDENTIFICATION AND EVALUATION				DESIGN PREVENTIVE MEASURES				PROCEDURAL PREVENTIVE MEASURES		
ITEM NO.	HAZARD: Structural failure	HAZARD LEVEL	OCCURENCE PROBABILITY	DESIGN SAFETY REQUIREMENTS AND DESIGN FEATURES		ADEQUACY OF DESIGN FEATURES				
	PRODUCING FACTORS			SAFETY REQUIREMENTS	DESIGN FEATURES	SAFETY/OPERATION TESTS	DESIGN ANALYSIS	PROCEDURAL SAFETY REQUIREMENTS/ MEASURES	PROCEDURAL VERIFICATION	DISPOSITION AND/OR REMARKS
26	Structural components fails because: – design incapable of supporting load placed on it – excessive loading of the structure – fracture growth – inducing faults by miss handling of the components. Collision with other flight hardware or GSE – installation error – improper fasteners or improper installation of fasteners – dissimilar metals causing galvanic reactions	III	D		Structural design uses the worst case loading and then have safety factors of 4:1 yield and 5:1 ultimate applied to the design Dissimilar metals are avoided; however, when used protective coatings are applied to prevent galvanic corrosion			Protective covering are placed over the structural members to lessen the effect of inadvertent collision with other objects Detailed procedures will be developed for the installation of tubes and fasteners Incoming inspection procedures ensure negligible fracture growth potential		Martin Marietta is experienced in the design, fabrication and construction of epoxy tube satellites. This experience will ensure sound construction of the epoxy tubes and proper care once the satellite is assembled.
27	Honeycomb panels are weakened due to inadequate panel venting during thermal vacuum testing	II	D		Panels are designed to permit proper venting			Review designs of honeycomb panels to ensure proper venting has been incorporated		
28	Galvanic corrosion causes failure of metal components. Cause dissimilar metals in contact with each other and no protective coating	III	D					Procedures will check for protective coating when dissimilar metals are used in contact with each other		

DCC082593

20043203
30 August 1993

PROJECT: EOS	HAZARD ANALYSIS	DATE: 30 August 1993
PROJECT PHASE: PDR		REVISION:
SYSTEM/SUBSYSTEM: Structure/Mechanism		PAGE: 28 OF 35

HAZARD IDENTIFICATION AND EVALUATION				DESIGN PREVENTIVE MEASURES				PROCEDURAL PREVENTIVE MEASURES		
ITEM NO.	HAZARD: Structural failure / PRODUCING FACTORS	HAZARD LEVEL	OCCURENCE PROBABILITY	DESIGN SAFETY REQUIREMENTS AND DESIGN FEATURES		ADEQUACY OF DESIGN FEATURES				
				SAFETY REQUIREMENTS	DESIGN FEATURES	SAFETY/OPERATION TESTS	DESIGN ANALYSIS	PROCEDURAL SAFETY REQUIREMENTS/ MEASURES	PROCEDURAL VERIFICATION	DISPOSITION AND / OR REMARKS
29	Spring driven hinges containing stored mechanical energy inadvertently activate damaging flight hardware and injuring personnel; possible causes: – stray voltage – EMI – improper commands from from ground support equipment or internal computer – operator error – failure of electronic hardware	II	D	WSMCR 127–1 para. 3.13.3.1.2; fault tolerance WSMCR 127–1 p. 3.13.3.2.4.3; twisted shielded wire pairs	Activation of stored energy devices requires operator intervention while performing ground tests Circuits activating stored energy devices are fault tolerant Harnesses are twisted shielded pairs to eliminate EMI effects on the wiring			Connectors are checked for stray voltages bent pins and contamination prior to mating		
30	Separation nut with spring contains stored mechanical energy and pyrotechnic. Inadvertent activation of these devices could damage flight hardware or injury personnel. Possible causes: – stray voltage – EMI improper commands from from ground support equipment or internal computer – operator error – failure of electronic hardware	II	D	WSMCR 127–1 para. 3.13.3.2.4 shielding attenuation requirements WSMCR 127–1 p. 3.13.3.2.4.1; 20dB attenuation MIL–STD–1576 para. 5.2.d; provide 360 degree shielding for pyro circuits	All pyrotechnic wiring consists of twisted shield pairs Pyrotechnic buses are design to attenuate signals by 20 dB Pyro circuits are being designed to provide 360 degree shielding					Activation of the separation bolt circuit while performing ground testing requires operator intervention at the EGSE console.

PROJECT: EOS	HAZARD ANALYSIS	DATE: 30 August 1993
PROJECT PHASE: PDR		REVISION:
SYSTEM/SUBSYSTEM: Structure/Mechanism		PAGE: 29 OF 35

HAZARD IDENTIFICATION AND EVALUATION				DESIGN PREVENTIVE MEASURES				PROCEDURAL PREVENTIVE MEASURES		
ITEM NO.	HAZARD: Structural failure	HAZARD LEVEL	OCCURENCE PROBABILITY	DESIGN SAFETY REQUIREMENTS AND DESIGN FEATURES		ADEQUACY OF DESIGN FEATURES				
	PRODUCING FACTORS			SAFETY REQUIREMENTS	DESIGN FEATURES	SAFETY/OPERATION TESTS	DESIGN ANALYSIS	PROCEDURAL SAFETY REQUIREMENTS/ MEASURES	PROCEDURAL VERIFICATION	DISPOSITION AND / OR REMARKS
31	Boom or antenna motor is activation may cause damage to flight hardware or personnel injury. Activation may be caused by: – EMI – Stray voltage – improper computer commands from ground support equipment or internal computer – operator error – failure of electrical component	III	D	WSMCR 127–1 para. 3.14.3.2; fault tolerance WSMCR 127–1 p. 3.13.3.2.4.3; EMI shielding	Circuit design is one fault tolerant, Design of the checkout stations requires operator intervention for activation of hazardous commands Wiring harnesses provide shielding against EMI			Connectors are to checked for stray voltages during the integration process		Activation of the separation bolt circuit while performing ground testing requires operator intervention at the EGSE console.
32	Fasteners fail because of: – material failure – installation error resulting in excessive loading – not designed for worst case loading	II	D		Design of the fastener is based on the worst case loading projections Safety margins are design into the sizing of the fasteners Fasteners are protected from inadvertent contact by covering them or providing some type of physical barrier Dissimilar metals are not used to preclude galvanic reactions			Detailed procedures are to be developed for installation of fasteners and structural tubes		

DCC082593

20043203
30 August 1993

PROJECT: EOS
PROJECT PHASE: PDR
SYSTEM/SUBSYSTEM: GN&C

HAZARD ANALYSIS

DATE: 30 August 1993
REVISION:
PAGE: 30 OF 35

HAZARD IDENTIFICATION AND EVALUATION				DESIGN PREVENTIVE MEASURES				PROCEDURAL PREVENTIVE MEASURES		
ITEM NO.	HAZARD: RWA overspeed / PRODUCING FACTORS	HAZARD LEVEL	OCCURENCE PROBABILITY	DESIGN SAFETY REQUIREMENTS AND DESIGN FEATURES: SAFETY REQUIREMENTS	DESIGN SAFETY REQUIREMENTS AND DESIGN FEATURES: DESIGN FEATURES	ADEQUACY OF DESIGN FEATURES: SAFETY/OPERATION TESTS	ADEQUACY OF DESIGN FEATURES: DESIGN ANALYSIS	PROCEDURAL SAFETY REQUIREMENTS/ MEASURES	PROCEDURAL VERIFICATION	DISPOSITION AND / OR REMARKS
33	Loss of motor control may result in an over-speed condition, causes are: – bent pin – miswire – software glitch	III	E		RWA has redundant speed controllers which shut off power to the RWA motor The housing is designed to withstand the energy if the wheel/hub should break			QC maintains tight tolerances on the fracture mechanics of the wheel/hub Visually check all connectors prior to mating Test cables thoroughly prior to using with assemblies		Vendor selection has not been made at the time of this report. Design features will be reflected in the hazard analysis for CDR

PROJECT: EOS	HAZARD ANALYSIS	DATE: 30 August 1993
PROJECT PHASE: PDR		REVISION:
SYSTEM/SUBSYSTEM: Instruments		PAGE: 31 OF 35

HAZARD IDENTIFICATION AND EVALUATION				DESIGN PREVENTIVE MEASURES				PROCEDURAL PREVENTIVE MEASURES		
ITEM NO.	HAZARD:	HAZARD LEVEL	OCCURENCE PROBABILITY	DESIGN SAFETY REQUIREMENTS AND DESIGN FEATURES		ADEQUACY OF DESIGN FEATURES				
	PRODUCING FACTORS			SAFETY REQUIREMENTS	DESIGN FEATURES	SAFETY/OPERATION TESTS	DESIGN ANALYSIS	PROCEDURAL SAFETY REQUIREMENTS/ MEASURES	PROCEDURAL VERIFICATION	DISPOSITION AND/OR REMARKS
	Electrical power									
I-1	The presence of high energy sources is a hazard to personnel and flight hardware if inadvertent contact is made	III	D	WSMCR 127-1 para. 3.14.2; adhere to the NEC NFPA 70, NEC 110-17; shielding of power sources	High energy sources contact are shielded from inadvertent contact Hot leads are on female connectors			Procedures will identify high voltage sources Personnel will be familiar with the system and be able to identify high voltage sources as they work on the hardware		Martin Marietta assembly procedures prohibit the mating of live circuits
	Temperature Extremes									
I-2	While filling the coolers and the presences of the filled coolers presents the possibility for personnel to incur sever frost burns.	III	C	WSMCR 127-1 para. 3.12.4; structural analysis WSMCR 127-1 para. 3.12.11; safety factors WSMCR 127-1 para. 3.10.4; back out procedures	The systems containing cyro working fluids meet the requirements of MIL-STD-1522A for pressure vessels and components			Review instrumenter's filling procedures and ensure back out procedures are provided for various points throughout the fill procedure.		Will verify the instrumenters design to ensure that the coolers and their working fluid can be handled safely. Identify personnel protective equipment required while handling and filling the coolers.

DCC082593

20043203
30 August 1993

PROJECT: EOS	HAZARD ANALYSIS	DATE: 30 August 1993
PROJECT PHASE: PDR		REVISION:
SYSTEM/SUBSYSTEM: Instruments		PAGE: 32 OF 35

HAZARD IDENTIFICATION AND EVALUATION				DESIGN PREVENTIVE MEASURES				PROCEDURAL PREVENTIVE MEASURES		
				DESIGN SAFETY REQUIREMENTS AND DESIGN FEATURES		ADEQUACY OF DESIGN FEATURES				
ITEM NO.	HAZARD: / PRODUCING FACTORS	HAZARD LEVEL	OCCURENCE PROBABILITY	SAFETY REQUIREMENTS	DESIGN FEATURES	SAFETY/OPERATION TESTS	DESIGN ANALYSIS	PROCEDURAL SAFETY REQUIREMENTS/ MEASURES	PROCEDURAL VERIFICATION	DISPOSITION AND / OR REMARKS
	Toxic Material and Health Concerns									
I–3	The presence of toxic materials, such as beryllium, and material which may cause skin rashes are a possible health hazard to personnel.	III	C	WSMCR 127–1 para. 3.10.1; limit the use of toxic material				Procedures and program training will instruct personnel to wash hands immediately after coming into contact with identified lubricants. Machining of beryllium parts requires special precautions including the use of personnel protective equipment approved by EHS		Contact with the cyro working fluids, nitrogen and helium, can result in skin damage. Release in a confined volume can cause oxygen depletion.
	Flammable Material									
I–4	Flammable material located near possible ignition sources.	III	D	Materials used near ignition sources shall preclude the propagation on the flame front. Designs will limit the use and location of flammable materials						Can not be evaluated until further in the design.

PROJECT: EOS	HAZARD ANALYSIS	DATE: 30 August 1993
PROJECT PHASE: PDR		REVISION:
SYSTEM/SUBSYSTEM: Instruments		PAGE: 33 OF 35

HAZARD IDENTIFICATION AND EVALUATION				DESIGN PREVENTIVE MEASURES				PROCEDURAL PREVENTIVE MEASURES		
ITEM NO.	HAZARD: / PRODUCING FACTORS	HAZARD LEVEL	OCCURENCE PROBABILITY	DESIGN SAFETY REQUIREMENTS AND DESIGN FEATURES		ADEQUACY OF DESIGN FEATURES				
				SAFETY REQUIREMENTS	DESIGN FEATURES	SAFETY/OPERATION TESTS	DESIGN ANALYSIS	PROCEDURAL SAFETY REQUIREMENTS/ MEASURES	PROCEDURAL VERIFICATION	DISPOSITION AND / OR REMARKS
	Control Systems									
I–5	Control inhibits are by–passed because: – connectors are im-properly mated – contamination on the connector – bent pins shorting out signal – software	III	C	WSMCR 127–1 para. 3.14.3.1; connector keying WSMCR 127–1 para. 3.14.5.2; prevent reverse polarity	Connectors are in-dividually keyed or labeled to preclude mismating Connectors are the scoop proof type to preclude bending of pins			Prior to mating all connectors are visu-ally checked for bent pins and for contami-nation on the con-nector facing and pins		

DCC082593

20043203
30 August 1993

PROJECT: EOS	HAZARD ANALYSIS	DATE: 30 August 1993
PROJECT PHASE: PDR		REVISION:
SYSTEM/SUBSYSTEM: Instruments		PAGE: 34 OF 35

HAZARD IDENTIFICATION AND EVALUATION				DESIGN PREVENTIVE MEASURES				PROCEDURAL PREVENTIVE MEASURES		
ITEM NO.	HAZARD: / PRODUCING FACTORS	HAZARD LEVEL	OCCURENCE PROBABILITY	DESIGN SAFETY REQUIREMENTS AND DESIGN FEATURES: SAFETY REQUIREMENTS	DESIGN SAFETY REQUIREMENTS AND DESIGN FEATURES: DESIGN FEATURES	ADEQUACY OF DESIGN FEATURES: SAFETY/OPERATION TESTS	ADEQUACY OF DESIGN FEATURES: DESIGN ANALYSIS	PROCEDURAL SAFETY REQUIREMENTS/ MEASURES	PROCEDURAL VERIFICATION	DISPOSITION AND / OR REMARKS
	Anhydrous Ammonia									
I-6	Component leakage releasing anhydrous ammonia into the work area, caused by: – improper weld – fractured joint or component due to over pressurization or excessive mechanical flexing of thermal components – dissimilar metals resulting in galvanic corrosion	II	D	WSMCR 127-1 para. 3.10.2; TLV exposure WSMCR 127-1 para. 3.10.3; personnel protective WSMCR 127-1 para. 3.12.4; structural analysis WSMCR 127-1 para. 3.12.11; safety factors WSMCR 127-1 para. 3.10.4; back out procedures	The systems containing anhydrous ammonia meet the requirements of -1522A for pressure vessels and components The design safety factor for heat pipes is 2.5 x MEOP The design contains flex hosing at critical bends to permit movement of the plumbing system without placing excessive mechanical motion on the system The thermal system uses the EOS bus structure to provide support to pressure lines and components			X-ray all welds in the ammonia subsystem Design the subsystem to proper safety factor levels Personnel working with ammonia components will wear protective equipment as directed by EHS All material used in the ammonia system and adjacent to it will be checked for compatibility with ammonia Areas in which ammonia is used will contain ammonia sensors Procedures will be developed with safe means to back out to a safe position should something interrupt normal activity flow		

PROJECT: EOS	HAZARD ANALYSIS	DATE: 30 August 1993
PROJECT PHASE: PDR		REVISION:
SYSTEM/SUBSYSTEM: Instruments		PAGE: 35 OF 35

HAZARD IDENTIFICATION AND EVALUATION				DESIGN PREVENTIVE MEASURES				PROCEDURAL PREVENTIVE MEASURES		
ITEM NO.	HAZARD: PRODUCING FACTORS	HAZARD LEVEL	OCCURENCE PROBABILITY	DESIGN SAFETY REQUIREMENTS AND DESIGN FEATURES		ADEQUACY OF DESIGN FEATURES				
				SAFETY REQUIREMENTS	DESIGN FEATURES	SAFETY/OPERATION TESTS	DESIGN ANALYSIS	PROCEDURAL SAFETY REQUIREMENTS/ MEASURES	PROCEDURAL VERIFICATION	DISPOSITION AND / OR REMARKS
	Structures/Mechanisms/ Moving Devices									
I-7	Fasteners fail because of: – material failure – installation error resulting in excessive loading – not designed for worst case loading	II	D		Design of the fastener is based on the worst case loading projections Safety margins are design into the sizing of the fasteners			Detailed procedures are to be developed for installation of fasteners and structural tubes		
I-8	Galvanic corrosion causes failure of metal components. Cause dissimilar metals in contact with each other and no protective coating	III	D		Dissimilar metals are avoided; however, when used protective coatings are applied to prevent galvanic corrosion			Procedures will include steps to check for protective coating when dissimilar metals are used in contact with each other		
I-9	Structural components failures because: – design incapable of supporting load placed on it – excessive loading of the structure – fracture growth – inducing faults by miss handling of the components. Collision with other flight hardware or GSE – installation error – improper fasteners or improper installation of fasteners – dissimilar metals causing galvanic reactions	III	D		Structural design uses the worst case loading and then have safety factors of 4:1 yield and 5:1 ultimate applied to the design			Protective coverings are placed over the structural members to lessen the effect of inadvertent collision with other objects Detailed procedures will be developed for the installation of tubes and fasteners Incoming inspection procedures ensure negligible fracture growth potential		Martin Marietta is experienced in the design, fabrication and construction of epoxy tube satellites. This experience will ensure sound construction of the epoxy tubes and proper care once the satellite is assembled.

DCC082593

20043203
30 August 1993

20008502
CAGE No. 49671
30 August 1993

(Preliminary)
General Instrument Interface Handbook
UID–101

Prepared under:
Contract NAS5–32500
NASA Goddard Space Flight Center
Greenbelt, Maryland 20771

Prepared by:
Martin Marietta Corporation
Astro Space
P.O. Box 800
Princeton, New Jersey 08543–0800

DCC082793

(This page intentionally left blank.)

REVISION LOG

This log identifies those portions of this document which have been revised since the original issue Revised portions of each page, for the current revision only, are identified by marginal striping.

Revision	Paragraph Number(s) Affected	Rev. Date	Approval
Preliminary		08/30/93	NB

(This page intentionally left blank.)

TABLE OF CONTENTS

Section	Title	Page
1	INTRODUCTION	1
1.1	Scope	1
1.1.1	Unique Instrument Interface Document	1
1.1.2	General Instrument Interface Specification	1
1.1.3	Interface Control Documents	1
1.1.4	General Instrument Interface Handbook	1
1.2	Change Authority	2
1.3	Terminology	2
2	REFERENCE DOCUMENTS	5
3	MECHANICAL REQUIREMENTS	7
3.1	Mechanical Interface Definitions	10
3.1.1	Spacecraft Mounting Interface Definition	10
3.1.2	Coldplate Mechanical Interface Definition	10
3.2	Envelopes	10
3.2.1	Instrument Envelope Allocation	10
3.2.1.1	Instrument Launch Phase Envelope	10
3.2.1.2	Instrument On–Orbit Envelope	11
3.2.2	Instrument Envelope Documentation	11
3.2.3	External Configuration Changes	11
3.3	Fields of View	11
3.3.1	Fields–of–View Allocation	11
3.3.2	Fields–of–View Accommodation	11
3.3.3	Fields–of–View Documentation	11
3.4	Mass Properties	12
3.4.1	Instrument Mass Allocation	12
3.4.2	Instrument Mass Measurement	12
3.4.3	Instrument Mass Documentation	12
3.4.4	Instrument Mass Property Report	12
3.4.5	Instrument Mass Variability	12

TABLE OF CONTENTS (Continued)

Section	Title	Page
3.4.5.1	Instrument Mass Variability Allocation	12
3.4.5.2	Instrument Mass Variability Documentation	13
3.4.6	Center of Mass Documentation	13
3.4.7	Moments of Inertia	13
3.4.7.1	Moments of Inertia Determination	13
3.4.7.2	Moments of Inertia Accuracy	13
3.4.7.3	Moments of Inertia Documentation	13
3.4.7.4	Moments of Inertia Variation Documentation	14
3.4.8	Products of Inertia	14
3.4.8.1	Product of Inertia Determination	14
3.4.8.2	Product of Inertia Accuracy	14
3.4.8.3	Product of Inertia Documentation	14
3.4.8.4	Product of Inertia Variation Documentation	14
3.5	Mounting	14
3.5.1	Mounting Method	14
3.5.2	Mounting Interface	15
3.5.2.1	Mounting Interface Documentation	15
3.5.2.2	Mounting Hole Coordinates and Dimensions	15
3.5.3	Mounting Hardware	15
3.5.3.1	Mounting Hardware Provider	15
3.5.3.2	Mounting Hardware Documentation	15
3.5.3.3	Mounting Bolts	15
3.5.4	Kinematic Mounts	15
3.5.4.1	Kinematic Mount Provider	15
3.5.4.1.1	Test Kinematic Mount Delivery	15
3.5.4.1.2	Flight Kinematic Mount Delivery	16
3.5.4.1.3	Instrument Kinematic Mount Assembly	16
3.5.4.2	Kinematic Mount Characteristics	16
3.5.4.2.1	Kinematic Mount Structure	16
3.5.4.2.2	Kinematic Mount Breakaway Torque	16
3.5.4.2.3	Kinematic Mount Angular Freedom of Movement	16
3.5.4.2.4	Kinematic Mount Thermal Conductance	16

TABLE OF CONTENTS (Continued)

Section	Title	Page
3.5.4.3	Kinematic Mounting	17
3.5.5	Spacecraft Mounting Surface	17
3.5.5.1	Spacecraft Mounting Surface Flatness	17
3.5.5.2	Spacecraft Mounting Surface Planarity	17
3.5.6	Instrument Mounting Surface	17
3.5.6.1	Instrument Mounting Surface Flatness	17
3.5.6.2	Instrument Mounting Surface Planarity	17
3.5.7	Mounting Location	18
3.5.7.1	Instrument Mounting Location	18
3.5.7.2	Instrument Accommodation Equipment Mounting Location	18
3.5.7.3	Mounting Location Documentation	18
3.5.8	Drill Templates	18
3.5.8.1	Drill Template Usage	18
3.5.8.2	Drill Template Fabrication Requirements	18
3.5.8.3	Optically Aligned Component Drill Template Provider	19
3.5.8.4	Non–optically Aligned Component Drill Template Provider	19
3.6	Alignment	19
3.6.1	Instrument Optical Alignment Cube	22
3.6.2	Optical Alignment Cube Requirements	22
3.6.2.1	Optical Alignment Cube Surface Area	22
3.6.2.2	Optical Alignment Cube Surface Orthogonality	22
3.6.2.3	Optical Alignment Cube Documentation	22
3.6.3	Alignment Responsibility	22
3.6.4	Alignment Angles	23
3.6.5	Pointing Allocations	23
3.7	General Structural Design Requirements	23
3.7.1	Structural Support	23
3.7.1.1	Instrument Structural Support	23
3.7.1.2	Coldplate Structural Support	23
3.7.2	Instrument Structural Dynamics	24
3.7.3	Interface Design Limit Loads Requirements	24
3.7.3.1	Limit Loads Application	24

TABLE OF CONTENTS (Continued)

Section	Title	Page
3.7.3.2	Limit Loads Application Axis	24
3.7.3.3	Interface Design Limit Loads	24
3.7.3.4	Random Vibration Levels	24
3.7.4	Coupled–Loads Analysis	25
3.7.4.1	Coupled–Loads Analysis Responsibility	25
3.7.4.2	Coupled–Loads Analysis Results	25
3.7.5	Pressurized System Design	25
3.7.6	Environmental Requirements	25
3.7.6.1	Launch Survivability Design Requirements	25
3.7.6.1.1	Shock	25
3.7.6.1.2	Launch Pressure Profile	25
3.7.6.1.3	Acoustics	26
3.7.6.2	Orbital Environment	26
3.7.6.2.1	Acceleration	26
3.7.6.2.2	Torque	26
3.7.6.2.3	Force	26
3.7.6.2.4	Angular Momentum	27
3.8	Finite Element Model	27
3.9	Instrument Mass Model	27
3.10	Instrument Mechanisms	28
3.10.1	Caging During Test and Launch	28
3.10.2	Caging On–Orbit	28
3.10.3	Captive Hardware	28
3.10.4	Sealed Hardware	28
3.11	Venting Forces	29
3.11.1	Continuous Venting Forces	29
3.11.2	Random Venting Impulses	29
3.11.3	Thrust Direction Adjustment	29
3.11.4	Venting Force Documentation	29
3.12	Coldplate Mechanical Interface Requirements	29
3.12.1	Coldplate Mounting	29
3.12.1.1	Coldplate Mounting Bolts	29

TABLE OF CONTENTS (Continued)

Section	Title	Page
3.12.1.2	Coldplate Bolt Pattern	29
3.12.1.3	Coldplate Mounting Hardware Provider	30
3.12.2	Instrument Surface for Coldplate Mechanical Interface	30
3.12.2.1	Instrument Surface Flatness	30
3.12.2.2	Instrument Surface Finish	30
3.12.3	Coldplate Drill Template	30
3.12.3.1	Coldplate Drill Template Usage	30
3.12.4	Coldplate Mounting Surface Area	30
3.12.5	Coldplate Mounting Surface	30
3.12.5.1	Coldplate Mounting Surface Flatness	30
3.12.5.2	Coldplate Mounting Surface Finish	31
3.12.6	Coldplate Mechanical Interface Filler Installation Responsibility	31
3.12.7	Coldplate Mechanical Interface Filler Installation Responsibility Documentation	31
3.12.8	Coldplate Mass Properties	31
3.13	Coldplate Plumbing	31
3.13.1	Coldplate Plumbing Provider	31
3.13.2	Coldplate Plumbing Support Provider	31
3.13.3	Coldplate Plumbing Support Documentation	31
3.13.4	Coldplate Plumbing Location	31
3.13.5	Coldplate Plumbing Clearance	31
3.13.6	Coldplate Plumbing Documentation	32
3.13.7	Coldplate Plumbing Dimensions and Mass Properties	32
3.14	Harnesses	32
3.14.1	Harness Provider	32
3.14.2	Harness Hardware Documentation	32
3.14.3	Harness Wiring Requirements	32
3.14.4	Tie Points	32
3.14.4.1	Tie Point Locations and Provider	32
3.14.4.2	Tie Point Documentation	33
3.14.5	Connectors	33
3.14.5.1	Connector Mating	33

TABLE OF CONTENTS (Continued)

Section	Title	Page
3.14.5.2	Connector Clearance	33
3.14.5.3	Connector Location	33
3.14.5.4	Keying	33
3.14.5.5	Interface Connector Provider	33
3.14.5.5.1	Harness Connectors	33
3.14.5.5.2	Instrument Component Connectors	33
3.14.5.5.3	Connector Types	34
3.14.5.5.4	Connector Type Documentation	34
3.14.5.6	Flight Plugs	34
3.14.5.6.1	Flight Plug Installation	34
3.14.5.6.2	Flight Plug Responsibility	34
3.14.5.6.3	Flight Plug Documentation	34
3.14.5.7	Connector Protective Covers	34
3.14.5.8	Test Connectors	35
3.14.5.8.1	Test Connector Accessibility	35
3.14.5.8.2	Test Connector Documentation	35
3.14.5.9	Breakout Boxes	35
3.14.5.9.1	Intra–Instrument Breakout Boxes	35
3.14.5.9.2	Instrument–to–Spacecraft Interface Breakout Boxes	35
3.14.5.10	Buffer Connectors and Connector Savers	35
3.14.5.10.1	Buffer Connector and Connector Saver Utilization	35
3.14.5.10.2	Buffer Connector and Connector Saver Provider	35
3.14.5.11	Electrical Connector Constraints	35
3.15	Access	36
3.15.1	Access Identification	36
3.15.2	General Access	36
3.16	Handling Fixtures	36
3.17	Launch Site Equipment Installation and Removal	36
3.17.1	Non–Flight Equipment	36
3.17.2	Flight Equipment	36
3.17.3	Flight and Non–Flight Equipment Documentation	36
4	THERMAL REQUIREMENTS	37

TABLE OF CONTENTS (Continued)

Section	Title	Page
4.1	Thermal Interface Description	41
4.2	Thermal Design	41
4.2.1	Instrument Thermal Design Provider	41
4.2.2	Instrument Thermal Design	41
4.3	Heat Transfer	42
4.3.1	Heat Transfer with the Spacecraft	42
4.3.1.1	Average Heat Flux	42
4.3.1.2	Heat Transfer Distribution	42
4.3.2	Heat Transfer with the Coldplate	42
4.3.3	Heat Transfer Distribution Documentation	43
4.3.4	Environmental Heat Transfer	43
4.3.5	Deleted	43
4.4	Temperature	43
4.4.1	Spacecraft Temperature Range	43
4.4.2	Coldplate Temperature Requirements	43
4.4.2.1	Coldplate Temperature Range	43
4.4.2.2	Coldplate Interface Filler Temperature Gradient	44
4.4.3	Instrument Temperature Range	44
4.4.4	Test Coldplate Temperatures During Instrument Qualification Testing	44
4.4.5	Test Coldplate Temperatures During Instrument Acceptance Testing	45
4.5	Temperature Monitoring	45
4.5.1	Mechanical Interface Temperature Monitoring	45
4.5.2	Instrument Temperature Monitoring	45
4.5.3	Temperature Sensor Location	46
4.6	Thermal Control Hardware	46
4.6.1	Coldplate	46
4.6.1.1	Coldplate Capacity	46
4.6.1.2	Coldplate Configuration	46
4.6.1.3	Coldplate Mounting Orientation	46
4.6.1.4	Coldplate Mounting Elevation	47

TABLE OF CONTENTS (Continued)

Section	Title	Page
4.6.1.5	Coldplate Mechanical Interface Filler Conductivity	47
4.6.1.6	Test Coldplate Requirements	47
4.6.2	Heaters	48
4.6.2.1	Survival Heaters	48
4.6.2.2	Survival Heater Control	48
4.6.3	Thermal Control Hardware	48
4.6.3.1	Thermal Control Hardware Responsibility	48
4.6.3.2	Thermal Control Hardware Documentation	49
4.7	Thermal Models	49
4.7.1	Surface Model	49
4.7.2	Reduced Node Thermal Math Model	49
4.7.3	Detailed Thermal Math Model	50
5	ELECTRICAL REQUIREMENTS	51
5.1	Electrical Interface Requirements	51
5.1.1	Electrical Interfaces	51
5.1.2	Electrical Interface Definitions	53
5.1.2.1	Electrical Interface Location	53
5.1.2.2	Operational Power	53
5.1.2.2.1	Peak Power	53
5.1.2.2.2	Average Power	53
5.1.2.3	Survival–Mode Power	53
5.1.2.4	Safe–Mode Power	53
5.1.2.5	Launch Phase Power	54
5.2	Power	54
5.2.1	Instrument Power Allocations	54
5.2.1.1	Operational Power Allocation	54
5.2.1.2	Survival Power Allocation	54
5.2.1.3	Launch Phase Power Allocation	54
5.2.1.4	Power Interface Allocations	54
5.2.1.5	Instrument Power–Level Documentation	54
5.2.2	Power Characteristics	56

TABLE OF CONTENTS (Continued)

Section	Title	Page
5.2.2.1	Voltage	56
5.2.2.1.1	Voltage Transients	56
5.2.2.1.2	Abnormal Steady–State Voltage Limits	56
5.2.2.2	Power Source Impedance	56
5.2.2.3	Current	56
5.2.2.3.1	Instrument Current Transients	56
5.2.2.3.2	Instrument Conducted Common Mode Current	57
5.2.2.3.3	Overcurrent Protection	57
5.2.2.3.3.1	Overcurrent Protection Device Size	57
5.2.2.3.3.2	Overcurrent Protection Device Size Documentation	57
5.2.2.4	Instrument Power Input Impedance	57
5.2.2.4.1	Instrument Common Mode Impedance	57
5.2.2.4.2	Instrument Differential Mode Impedance	58
5.2.3	Power Control	58
5.2.3.1	Power Connections	58
5.2.3.2	Power Application	58
5.2.3.3	Power Fault Tolerance	58
5.2.3.4	Instrument Equipment Separation	58
5.2.3.5	Instrument Power Control	58
5.3	Grounds, Returns, and References	59
5.3.1	Power Leads and Returns	59
5.3.1.1	Power Harnessing	60
5.3.1.2	Isolation	60
5.3.1.2.1	Deleted	60
5.3.1.2.2	120 V Primary Power Isolation	60
5.3.1.2.3	Secondary Power Isolation	60
5.3.1.3	Power Reference	61
5.3.2	Signal Reference	61
5.3.2.1	Signal Reference Constraints	61
5.3.2.2	Differential Signal Isolation	61
5.3.3	Instrument Grounding	61
5.3.3.1	Instrument Ground Interconnection	61

TABLE OF CONTENTS (Continued)

Section	Title	Page
5.3.3.2	Component Grounding	62
5.3.3.2.1	Component Ground Location	62
5.3.3.2.2	Component Ground Connection	62
5.3.3.2.3	Component Bonding Straps	62
5.3.3.3	Connector Grounding	62
5.3.3.4	Chassis Reference Current	62
5.3.4	Fault Ground	62
5.3.4.1	Instrument Fault Ground Requirements	62
5.3.4.1.1	Instrument Fault Ground Connection	62
5.3.4.1.2	Instrument Fault Ground Routing	63
5.3.4.1.3	Instrument Fault Ground Wire Grounding	63
5.3.4.2	Spacecraft Fault Ground Requirements	63
5.3.4.2.1	Spacecraft Fault Ground Routing	63
5.3.4.2.2	Fault Ground Wire Connection to Instrument Ground Interconnection	63
5.3.4.2.3	Fault Ground Wire Connection to Primary Power Reference	63
5.3.5	Signal Reference Ground	63
5.3.5.1	Instrument Ground Interconnection Referencing	63
5.3.5.2	Thermal Blanket Grounding	67
5.3.5.2.1	Thermal Blanket Layer Interconnection	67
5.3.5.2.2	Thermal Blanket Chassis Grounding	67
5.4	Command and Data Handling Interface	67
5.4.1	General Signal Interface Requirements	69
5.4.1.1	Interface Conductors	69
5.4.1.2	Interface Redundancy	70
5.4.1.2.1	Redundant Interface Terminology	70
5.4.1.2.2	Redundant Interface Usage	70
5.4.1.2.2.1	Command Interfaces	70
5.4.1.2.2.2	Deleted	70
5.4.1.2.2.3	Deleted	70
5.4.1.2.3	Interface Fault Tolerance	70
5.4.1.3	Interface Circuitry Isolation	70

TABLE OF CONTENTS (Continued)

Section	Title	Page
5.4.2	Point–to–Point Command and Telemetry Interfaces	71
5.4.2.1	Relay Drive Commands	71
5.4.2.1.1	Deleted	71
5.4.2.1.2	Relay Drive Command Characteristics	71
5.4.2.1.3	Relay Drive Command Load Characteristics	73
5.4.2.2	Deleted	73
5.4.2.2.1	Deleted	73
5.4.2.2.2	Deleted	73
5.4.2.3	Passive Bi–Level Telemetry Interface	73
5.4.2.3.1	Deleted	73
5.4.2.3.2	Passive Bi–Level Telemetry Signal Characteristics	73
5.4.2.4	Passive Analog Telemetry Interfaces	75
5.4.2.4.1	Deleted	75
5.4.2.4.2	Passive Analog Telemetry Signal Characteristics	75
5.4.2.5	Active Analog Telemetry Interfaces	75
5.4.2.5.1	Deleted	78
5.4.2.5.2	Active Analog Telemetry Signal Characteristics	78
5.4.3	Time Mark and Frequency Bus	78
5.4.3.1	Reference Frequency Electrical Characteristics	78
5.4.3.2	Time Mark Encoding	78
5.4.3.3	Time Mark Encoding	78
5.4.3.4	Time Mark Accuracy	78
5.4.4	Command and Telemetry Bus Electrical Interface	80
5.4.4.1	Command and Telemetry Bus Electrical Characteristics	80
5.4.5	Science Data Electrical Interface	80
5.4.5.1	Science Data Interface Control	80
5.4.5.2	Low–Rate Science Data Interface Electrical Characteristics	80
5.4.5.3	High–Rate Science Data Interface Electrical Requirements	83
5.4.5.3.1	High–Rate Interface Circuitry	83
5.4.5.3.1.1	Instrument High–Rate Science Data Interface Circuitry	83
5.4.5.3.1.2	Instrument High–Rate Science Data Signal Interface Coupling	83

TABLE OF CONTENTS (Continued)

Section	Title	Page
5.4.5.3.1.3	Spacecraft High–Rate Science Data Interface Circuitry	83
5.4.5.3.1.4	High–Rate Science Data Interface Polarity Inversion	85
5.4.5.3.2	High–Rate Science Data Interface Electrical Characteristics	85
5.5	Other Interfaces	85
5.5.1	Test Point Interfaces	85
5.5.1.1	Spacecraft Integration and Test Use	85
5.5.1.2	Performance Verification Limitation	85
5.5.1.3	Keyed Connectors	86
5.5.1.4	Power and Load Isolation	86
5.5.1.5	Failure Propagation	86
5.5.1.6	Short–Circuit Isolation	86
5.5.1.7	Grounding Integrity	86
5.5.1.8	EMI/EMC	86
5.5.1.9	Flight Standards	86
5.5.1.10	Mechanical Requirements	86
5.5.2	Test Point Interface Documentation	86
5.6	Failure Modes and Effect Analysis	87
6	COMMAND AND DATA HANDLING REQUIREMENTS	89
6.1	Command and Telemetry Bus	97
6.1.1	Command and Telemetry Bus Configuration	97
6.1.1.1	Command and Telemetry Bus Transfer Method	97
6.1.1.1.1	Command and Telemetry Bus MIL–STD–1553B Mode Code Utilization	101
6.1.1.1.2	Command and Telemetry Data Transfers	102
6.1.1.1.2.1	Data Transfers to the Instrument	102
6.1.1.1.2.2	Data Transfers from the Instrument	104
6.1.1.1.3	Broadcast Mode on the Command and Telemetry Bus	104
6.1.2	Command and Telemetry Bus Transfer Timing	104
6.1.2.1	Minor Cycle Length	107
6.1.2.1.1	Minor Cycle Task List	107
6.1.2.1.2	Minor Cycle Task List Completion	108

TABLE OF CONTENTS (Continued)

Section	Title	Page
6.1.2.2	Major Cycle Length	108
6.1.2.3	Master Cycle Length	108
6.1.2.4	Command and Telemetry Bus Task Scheduling	108
6.1.2.4.1	Synchronize with Data Word	109
6.1.2.4.1.1	Synchronize with Data Word Transfer Frequency	109
6.1.2.4.1.2	Synchronize with Data Word Transfer Timing	109
6.1.2.4.1.3	Data Word Content	109
6.1.2.4.1.4	Data Word Content Format	110
6.1.2.4.1.5	Instrument Response to Data Word	110
6.1.2.4.1.6	Instrument Telemetry Transfer Schedule	111
6.1.2.4.2	Command Transfers	111
6.1.2.4.3	Housekeeping Telemetry Transfers	113
6.1.2.4.3.1	Instrument Normal Housekeeping Telemetry Collection	116
6.1.2.4.3.2	Instrument Critical Health and Safety Housekeeping Telemetry Collection	116
6.1.2.4.3.3	Instrument Housekeeping Telemetry Readiness	117
6.1.2.4.4	Memory Load Transfers	117
6.1.2.4.5	Memory Dump Transfers	118
6.1.2.4.6	SCC OK, Ancillary Data, Time Code Data, and Safe Mode Commands	118
6.1.2.4.6.1	SCC OK, Ancillary Data, and Time Code Data Transfer Frequency	118
6.1.3	Command and Telemetry Bus Data	118
6.1.3.1	Commands	118
6.1.3.1.1	Real–Time Commands	119
6.1.3.1.2	Stored Commands	119
6.1.3.1.3	Safe–Mode Command Structure	119
6.1.3.1.4	SCC OK Command Structure	120
6.1.3.2	Memory Load and Dump Initiate Command Structures	120
6.1.3.2.1	Load Initiate Command Structure	120
6.1.3.2.2	Dump Initiate Command Structure	120
6.1.3.3	Memory Load Data Messages	120
6.1.3.4	Memory Dump Data Messages	120

TABLE OF CONTENTS (Continued)

Section	Title	Page
6.1.3.5	Ancillary Data Messages	120
6.1.3.5.1	Ancillary Data Contents	120
6.1.3.5.2	Ancillary Data Message Format	120
6.1.3.6	Time Code Data Messages	120
6.1.3.6.1	Time Code Data Contents	120
6.1.3.6.2	Time Code Data Epoch	120
6.1.3.6.3	Time Code Data Format	121
6.1.4	Command and Telemetry Bus Protocols	121
6.1.4.1	Instrument Command and Telemetry Bus RT Address Assignment	123
6.1.4.2	MIL–STD–1553B Message Identification	123
6.1.4.2.1	MIL–STD–1553B Message Subaddress Definition	123
6.1.4.2.2	Instrument Specific Subaddresses	126
6.2	Time Mark and Frequency Bus	126
6.2.1	Time Code Data Valid Indication	126
6.2.2	Time Information Timing	126
6.3	Low–Rate Science Data Bus	126
6.3.1	Low–Rate Science Data Interface Configuration	127
6.3.2	Broadcast Mode on the Low–Rate Science Data Bus	127
6.3.3	Low–Rate Science Data Transfer Timing	127
6.3.4	Low–Rate Science Data Bus Data Format	127
6.3.5	Low–Rate Science Data Bus Transfer Protocol	128
6.3.5.1	Low–Rate Science Data Bus RT Address Assignment	128
6.3.5.2	Low–Rate Science Data Bus MIL–STD–1553B Mode Code Utilization	129
6.3.5.3	Low–Rate Science Data Bus MIL–STD–1553B Message Subaddresses	129
6.3.5.4	Low–Rate Science Data Polling	129
6.3.5.5	Low–Rate Science Data Packet Readiness	129
6.3.5.6	Total Packet Length Indication	130
6.3.5.7	Low–Rate Science Data Packet Transfer	130
6.3.5.7.1	Low–Rate Instrument Polling Interval	130
6.3.5.7.2	Low–Rate Science Data Throughput Interval	130

TABLE OF CONTENTS (Continued)

Section	Title	Page
6.3.5.7.3	Low–Rate Science Data Packet Transfer Timing	130
6.3.5.8	Low–Rate Science Data Packet Transfer Method	130
6.3.5.8.1	Single Message Packet Transfer	131
6.3.5.8.2	Multiple Message Packet Transfer	131
6.3.5.8.3	Transferring an Odd Number of Octets	131
6.3.5.8.4	End of Transfer Data Word Content	131
6.4	High–Rate Science Data Interface	131
6.4.1	High–Rate Link Science Data Rate	132
6.4.1.1	High–Rate Link Allocation	132
6.4.2	High–Rate Science Data Packet Transfer Timing	132
6.4.2.1	High–Rate Science Data Interface Data Format	132
6.4.3	High–Rate Science Data Transfer Protocol	133
6.4.3.1	Data Encoding	133
6.4.3.2	High–Rate Science Message Data Message Format	133
6.4.3.2.1	High–Rate Science Data Message Symbols	133
6.4.3.2.2	High–Rate Science Data Message Fields	133
6.4.3.2.3	High–Rate Science Data Message Info Field Transmission	133
6.4.3.3	High–Rate Link Preamble	133
6.4.3.4	High–Rate Link Transmission Gap	133
7	COMMAND AND DATA HANDLING OPERATIONAL REQUIREMENTS	135
7.1	Science Data	135
7.1.1	Science Data Interface Allocation	139
7.1.2	Science Data Types	140
7.1.2.1	Low–Rate Science Data	140
7.1.2.2	High–Rate Science Data	140
7.1.2.3	Engineering Data	141
7.1.3	Science Data Requirements	141
7.1.3.1	Application Process ID	141
7.1.3.1.1	Application Process ID Allocation	141
7.1.3.1.2	Application Process ID Documentation	141

TABLE OF CONTENTS (Continued)

Section	Title	Page
7.1.4	Science Data Interface Test Packet Requirements	141
7.2	Commands	141
7.2.1	Point–to–Point Commands	146
7.2.1.1	Spacecraft Required Point–to–Point Commands	146
7.2.1.1.1	Instrument Operational Equipment ON and OFF Commands	146
7.2.1.1.2	Instrument Survival Equipment ON and OFF Commands	147
7.2.1.2	Instrument Point–to–Point Commands	147
7.2.1.2.1	Instrument Fault Recovery	147
7.2.1.2.1.1	Instrument Fault Isolation	147
7.2.2	Command and Telemetry Bus Commands	147
7.2.2.1	Real–Time Commands	148
7.2.2.1.1	Memory Load Initiation	148
7.2.2.1.2	Memory Dump Initiation	150
7.2.2.2	Stored Commands	153
7.2.2.2.1	Absolute Time Commands	156
7.2.2.2.1.1	Absolute Time Command Time Tag Resolution	156
7.2.2.2.1.2	Absolute Time Command Distribution	156
7.2.2.2.1.3	Absolute Time Command Time Tag Uniqueness	156
7.2.2.2.2	Relative Time Commands	156
7.2.2.2.2.1	Relative Time Sequence	156
7.2.2.2.2.2	Relative Time Sequence Distribution	158
7.2.2.2.2.3	Relative Time Sequence Distribution Timing	158
7.2.2.2.2.4	Relative Time Command Time Delay	158
7.2.2.3	Spacecraft Control Computer Issued Commands	158
7.2.2.3.1	Telemetry Monitor Commands	159
7.2.2.3.2	Instrument Telemetry Monitor Commands	159
7.2.2.3.3	SCC OK Indication and Safe–Mode Command	159
7.2.2.3.3.1	SCC OK Indication	159
7.2.2.3.3.2	Safe–Mode Command	160
7.2.2.3.4	Instrument Survival Mode Commands	160
7.2.2.4	Interface Selection	160
7.2.2.4.1	Time Mark and Frequency Bus Selection	160
7.2.2.4.2	Redundant High–Rate Link Selection	160

TABLE OF CONTENTS (Continued)

Section	Title	Page
7.2.2.5	High–Rate Link Test Command	161
7.2.3	Instrument Command Documentation	161
7.2.4	Command Requirements	161
7.2.4.1	Command Uniqueness	161
7.2.4.2	Critical Commands	161
7.2.4.3	Command Sequence	161
7.2.5	Command Restraints	161
7.2.5.1	Toggle Commands	161
7.2.5.2	Command Format Consistency	161
7.2.5.3	Multifunction Commands	162
7.3	Telemetry	162
7.3.1	Point–to–Point Telemetry	167
7.3.1.1	Instrument Status	167
7.3.1.2	Required Point–to–Point Telemetry	167
7.3.1.3	Instrument Point–to–Point Telemetry Sampling Rate	167
7.3.1.4	Instrument Point–to–Point Telemetry Sampling Rate Definition	167
7.3.2	Command and Telemetry Bus Telemetry	168
7.3.2.1	Instrument Housekeeping Telemetry Types	168
7.3.2.1.1	Normal Instrument Housekeeping Telemetry	168
7.3.2.1.2	Critical Health and Safety Telemetry	168
7.3.2.2	Instrument Telemetry Limits	168
7.3.2.2.1	Instrument Normal Housekeeping Telemetry Data Limits	168
7.3.2.2.2	Instrument Critical Health and Safety Telemetry Data Limits	169
7.3.2.3	Telemetry Monitor	169
7.3.2.3.1	Spacecraft Monitoring of Instrument Telemetry	169
7.3.2.3.2	Instrument Telemetry Monitoring Transfer Rates	169
7.3.2.3.3	Instrument Telemetry Word Format	169
7.3.3	Telemetry Interface Utilization Documentation	169
7.3.3.1	Instrument Point–to–Point Telemetry Documentation	169
7.3.3.2	Instrument Point–to–Point Telemetry Sampling Rate Documentation	169
7.3.3.3	Instrument Housekeeping Telemetry Documentation	169

TABLE OF CONTENTS (Continued)

Section	Title	Page
7.3.3.4	Instrument Housekeeping Telemetry Sampling Rate Documentation	170
7.3.3.5	Instrument Housekeeping Telemetry Format Documentation	170
7.3.3.6	Instrument Telemetry Monitoring Documentation	170
7.3.3.7	Instrument Transfer Schedule Documentation	170
7.3.3.8	Command and Telemetry Bus Data Transfer Schedule Adaptability	170
7.3.4	Telemetry Requirements	172
7.3.4.1	Telemetry Sampling Rates	172
7.3.4.2	Command Verification	172
7.3.4.2.1	Command Receipt Verification	172
7.3.4.2.2	Command Execution Verification	174
7.3.4.2.3	Command Verification Sampling Rate	175
7.3.4.2.4	Command Execution Verification Telemetry	175
7.3.4.3	Instrument Mode Dependency	175
7.3.4.4	Instrument Activity Dependency	175
7.3.4.5	Configuration Dependant Telemetry	175
7.3.4.6	Synchronization Restrictions	175
7.3.4.7	Instrument Telemetry Mnemonic Format	176
7.3.4.8	Telemetry Name	176
7.4	Command and Telemetry Bus Data	176
7.4.1	Memory Loads	176
7.4.2	Memory Dumps	176
7.4.3	Ancillary Data	178
7.4.4	Time Code Data	178
7.5	Autonomy	179
7.5.1	Instrument Mode and State Changes	181
7.5.1.1	Infrequently Changed Parameters	181
7.5.1.2	Normal Instrument State Changes	181
7.5.1.3	Mode Changes	181
7.5.2	Safe and Survival Modes	181
7.5.2.1	Instrument Safe–Mode	181

TABLE OF CONTENTS (Continued)

Section	Title	Page
7.5.2.1.1	Instrument Safe–Mode Entry	181
7.5.2.1.2	Instrument Safe–Mode Configuration	182
7.5.2.1.3	Safe–Mode Entry Override	182
7.5.2.1.4	Duration of Safe–Mode	182
7.5.2.2	Instrument Survival Mode	182
7.5.2.2.1	Spacecraft Survival Mode Entry	183
7.5.2.2.2	Instrument Survival Mode Entry	183
7.5.2.2.3	Duration of Survival Mode	183
7.5.2.3	Instrument Safe and Survival Modes Documentation.	183
7.5.3	Memory Load Verification	183
7.5.4	Time Mark and Frequency Bus Loss	184
8	CONTAMINATION CONTROL REQUIREMENTS	185
8.1	Contamination Protection Design	185
8.2	Contamination Protection Measures Documentation	186
8.3	Instrument Purge Implementation Documentation	186
8.4	Instrument Venting Documentation	186
8.5	Surface Avoidance	186
9	VERIFICATION AND REQUIREMENTS RESPONSIBILITY	187
9.1	Requirements Responsibility Matrix	187
9.2	Verification Responsibility and Methods Matrix	187
10	ENVIRONMENTS	191
10.1	Ephemerides	191
10.1.1	Orbital Characteristics	191
10.1.2	Transfer Orbit Characteristics	194
10.1.3	Sun–Pointing Safe Mode Orbital Characteristics	194
10.2	Spacecraft Reference Coordinate Frame	194
10.3	Pointing	195
10.4	Thermal Environments	196
10.4.1	Prelaunch, Launch, Ascent Thermal Environment	196

TABLE OF CONTENTS (Continued)

Section	Title	Page
10.4.2	Deleted	196
10.4.3	Thermal Environment	196
10.5	Total Ionizing Dose Environment	198
10.6	Single Event Upset and Latchup	201
10.7	Atomic Oxygen	203
10.8	Micrometeoroids	203
10.9	Space Debris	203
10.10	Magnetic Fields	203
10.10.1	Instrument–Generated Magnetic Fields	203
10.10.2	Magnetic Fields Documentation	204
10.10.3	Spacecraft Magnetic Fields	204
10.11	EMI/EMC Requirements	204
10.12	Spacecraft Charging	204
10.12.1	Instrument Electrostatic Discharge Control	204
10.12.2	Spacecraft Electrostatic Discharge Analysis	204
10.12.3	Spacecraft External Surface Charging	206

APPENDIX A

20	DELETED	207

APPENDIX B

30	ACRONYMS AND ABBREVIATIONS	209

APPENDIX C

40	SUGGESTED 120–VOLT PARTS LIST	217

APPENDIX D

50	MISSION PHASES AND OPERATING MODES	219
50.1	Mission Phases and Operating Modes Overview	219

TABLE OF CONTENTS (Continued)

Section	Title	Page
50.1.1	Mission Phases and Operating Modes Definitions	219
50.1.2	Mode Architecture	220
50.1.3	Mode Transition Overview	221
50.2	System Mode Requirements	222
50.2.1	Ground Test Mode	222
50.2.1.1	Functional Overview	222
50.2.1.2	Entry/Exit	222
50.2.1.3	Minimum Subsystem Requirements	223
50.2.1.4	Ground Test Mode Operations	224
50.2.2	Launch/Ascent Mode	225
50.2.2.1	Functional Overview	225
50.2.2.2	Entry/Exit	226
50.2.2.3	Minimum Subsystem Requirements	227
50.2.2.4	Launch/Ascent Mode Operations	229
50.2.3	Standby Mode	229
50.2.3.1	Functional Overview	229
50.2.3.2	Entry/Exit	230
50.2.3.3	Minimum Subsystem Requirement	231
50.2.3.4	Standby Mode Operations	233
50.2.4	Delta–V Mode	234
50.2.4.1	Functional Overview	234
50.2.4.2	Entry/Exit	235
50.2.4.3	Minimum Subsystem Requirements	236
50.2.4.4	Delta–V Mode Operations	238
50.2.4.4.1	Orbit Acquisition Phase Delta–V Mode Operations	238
50.2.4.4.2	Operational Initialization Phase Delta–V Mode Operations	239
50.2.4.4.3	Operational Phase Delta–V Mode Operations	240
50.2.5	Science Mode	242
50.2.5.1	Functional Overview	242
50.2.5.2	Entry/Exit	243
50.2.5.3	Minimum Subsystem Requirements	244
50.2.5.4	Science Mode Operations	245

TABLE OF CONTENTS (Continued)

Section	Title	Page
50.2.6	Survival Mode	245
50.2.6.1	Functional Overview	245
50.2.6.2	Entry/Exit	246
50.2.6.3	Minimum Subsystem Requirements	247
50.2.6.4	Survival Mode Operations	248
50.2.6.4.1	Survival Mode as Primary Mode	248
50.2.6.4.2	Survival Mode as Backup Mode	248
50.2.7	Safe Mode	249
50.2.7.1	Functional Overview	249
50.2.7.2	Entry/Exit	250
50.2.7.3	Minimum Subsystem Requirements	252
50.2.7.4	Safe Mode Operations	253
50.2.8	Instrument Accommodation	254
50.2.8.1	Instrument Operating Modes	254
50.2.8.2	Instrument Mode Transitions	255
50.2.8.3	Correspondence Between Instrument and Spacecraft Operating Modes	256
50.2.8.4	Resources Provided to Instruments in Each Spacecraft Operating Mode	257
50.2.8.4.1	Ground Test Mode	257
50.2.8.4.2	Launch/Ascent Mode	257
50.2.8.4.3	Standby Mode	257
50.2.8.4.4	Delta–V Mode	261
50.2.8.4.5	Science Mode	261
50.2.8.4.6	Survival Mode	262
50.2.8.4.7	Safe Mode	262

LIST OF FIGURES

Figure	Title	Page
3–1	EOS–AM Primary Structure	8
3–2	Spacecraft Body–Fixed Reference Coordinate Frame	20
4–1	Thermal Control Block Diagram	41
4–2	CPHTS Equipment Layout (Typical)	42
4–3	EOS AM +Y Radiator Assemblies	43
5–1	Electrical Power Subsystem (EPS) Block Diagram	55
5–2	Power Distribution Diagram	58
5–3	Secondary Electronics Grounding and Interface Concept	68
5–4	Secondary Electronics Grounding and Data Interface Concept for ASTER to Collocated BDU	69
5–5	Instrument Electrical Interfaces	71
5–6	Standard Relay Drive Interface Circuit	75
5–7	Standard Bi–Level Telemetry Interface Circuit	77
5–8	Standard Passive Analog Telemetry Interface Circuit	79
5–9	Standard Active Analog Telemetry Interface Circuit	80
5–10	Time Mark and Frequency Interface Circuit	82
5–11	Command and Telemetry Bus and Low–Rate Science Bus	84
5–12	Cross–Strapped 1553 Remote Terminal interface	85
5–13	Standard High–Rate Link Interface	87
6–1	Command and Data Handling Subsystem Block Diagram	93
6–2	Command Distribution Processing Flow	96
6–3	Transactional Analysis of Command Distribution Processing Flow	97
6–4	Transactional Analysis of Instrument Telemetry Processing Flow	99
6–5	1553B Information Transfer Formats	101
6–6	1553B Word Formats	102
6–7	1553B Ground Message Structure	106
6–8	BDU Command Message	107
6–9	Data System Cycle Timing	108
6–10	Major Cycle Task Scheduling	109
6–11	Synchronize–with–Data–Word	113
6–12	Command to Attached Device	115

LIST OF FIGURES (Continued)

Figure	Title	Page
6–13	Telemetry Gathering from Instrument	116
6–14	BDU Sub–Minor Cycle Task Schedule	119
6–15	BDU Sample Schedule Message	119
6–16	BDU Telemetry Control Word	121
6–17	Subaddress Descriptor Control Word	127
6–18	Subaddress Descriptor Data List and Status Words	128
7–1	Top Level C&DH Science Data Handling Architecture Block Diagram	138
7–2	CADU, CVCDU and Primary Header Formats	139
7–3	SFE Electrical Interface Block Diagram	141
7–4	Real–time Command Flow	145
7–5	C&DHS Data Flow between Instrument and C&DHS	147
7–6	CCSDS Layered Protocol	148
7–7	Stored Command Structures	160
7–8	Data Gathered and Virtual Channel Assignment	167
7–9	Housekeeping Telemetry	169
7–10	Time Code Data Words	181
9–1	Summary of the Verification Process	191
10–1	Beta Angle versus Time of Year for 1030 hr Descending Node 705 km Orbit	195
10–2	Eclipse Duration verses Time of Year for 1030 hr Descending Node 705 km Orbit	196
10–3	Pointing Requirement Definition	198
10–4	Observatory Worst–Case Magnetic Fields	208
50–1	Spacecraft Mission Phases	222

LIST OF TABLES

Table	Title	Page
6–1	Minor Cycle Tasks and Frequency of Occurrence	111
6–2	C&T RT Assigned Status Bits	126
6–3	Low–rate Science Assigned Status Bits	132
6–4	Low–rate Science Instrument Subaddresses	132
6–5	1553B Assigned Mode Codes For Low–rate Science	133
7–1	Memory Load Commands	153
7–2	Memory Dump Commands	156
7–3	S–Band Real–Time Telemetry	171
7–4	Telemetry Gathering Schedule Selection	175
7–5	Command Receipt Verification	177
7–6	Mandatory Instrument Commands	181
7–7	Optional Instrument Commands	181
7–8	Safe–mode Enable/Disable Override Commands	186
10–1	EOS Orbital Parameters	195
10–2	Prelaunch Environment	200
10–3	Thermal Control Subsystem: Assumed Parameters	201
10–4	Trapped Electron Spectrum	203
10–5	Trapped Proton Spectrum	204
10–6	Solar Flare Proton Spectrum For Total Dose Assessment	205
10–7	Solar Flare Proton Spectrum For Seu Assessment	205
40–1	Suggested120–volt Parts List	221
50–1	Spacecraft System Modes	224
50–2	Ground Test Mode Transition	227
50–3	Launch/Ascent Mode Transition	231
50–4	Standby Mode Transition	235
50–5	Standby Mode Transition Elements	238
50–6	Delta–V Mode Transition	240
50–7	Science Mode Transition	247
50–8	Survival Mode Transitions	250
50–9	Survival Mode Transition Elements	252
50–10	Safe Mode (Level 0)	256
50–11	Safe Mode Transition Elements	258

LIST OF TABLES (Continued)

TABLE	TITLE	PAGE
50–12	Instrument Operating Modes Mapped Into Spacecraft Operating Modes	260
50–13	Resources Provided To The Instruments In Each Spacecraft Operating Mode	262

1 INTRODUCTION

1.1 Scope

The interfaces between the instrument and the Earth Observing System (EOS) Spacecraft and instrument accommodation equipment are controlled through the use of the Unique Instrument Interface Documents (UIID), the General Instrument Interface Specification (GIIS), and the Interface Control Documents (ICD). This document, the EOS General Instrument Interface Handbook, hereafter referred to as the Handbook, provides explanatory information on the Spacecraft and its interfaces.

1.1.1 Unique Instrument Interface Document

The purpose of the Unique Instrument Interface Document (UIID) is:

a. TO ALLOCATE Spacecraft resources to a specific instrument.

b. TO DOCUMENT exceptions to GIIS requirements, restraints and constraints imposed by the instrument on the Spacecraft and instrument accommodation equipment, and special accommodations to be provided for the instrument.

1.1.2 General Instrument Interface Specification

The purpose of the General Instrument Interface Specification (GIIS) is:

a. TO SPECIFY a comprehensive set of Spacecraft–to–instrument interface requirements.

b. TO DEFINE the environments to which the Spacecraft will be subjected.

c. TO IDENTIFY the organization responsible for the implementation and verification of the requirements.

1.1.3 Interface Control Documents

The purpose of the Interface Control Documents (ICDs) is:

a. TO DESCRIBE in detail the design implementation of each Spacecraft–to–instrument interface and the interfaces with the instrument accommodation equipment.

1.1.4 General Instrument Interface Handbook

The purpose of the General Instrument Interface Handbook is:

a. TO FAMILIARIZE users with the EOS–AM Spacecraft, its subsystems, and capabilities.

b. TO EXPLAIN the current design implementation of each GIIS requirement and the Spacecraft–to–instrument interfaces.

The General Instrument Interface Specification (GIIS) and the General Instrument Interface Handbook are companion documents. They are written and maintained as two documents, separating the specification from the explanatory information. The GIIS contains the requirements necessary to control the Spacecraft–to–instrument interfaces. The General Instrument Interface Handbook, on the other hand, contains no interface requirements, but provides explanation of the GIIS interface requirements and, where applicable, describes the Spacecraft design and interface implementation. The organization of the Handbook parallels the section headings of the GIIS, such that information relative to a specific requirement in the GIIS can be located under the same section heading in the Handbook.

1.2 Change Authority

The General Instrument Interface Handbook is controlled and maintained by the Martin Marietta Corporation EOS–AM Program. Updates to the Handbook will be provided as needed to remain current with the GIIS.

1.3 Terminology

Certain terminology is used consistently throughout the GIIS and Handbook, and are discussed in the following paragraphs. Abbreviations and Acronyms appear in Appendix B, Section 30.

Component – The EOS–AM mission instrument components are: (ASTER) MPS, CSP, SWIR, TIR, VEL, VSR; (CERES) CERES–FORE, CERES–AFT; MISR; MODIS; MOPITT.

Dimensions – All drawing dimensions are in millimeters. English values, when also reported, are given in inches.

Fixed Base – For modeling purposes, the fixed base configuration of a component attached to its mounting surface means that the interface degrees of freedom fixed at the interface are only those restrained at the interface. For a bolted joint, only the three translational degrees of freedom are restrained. There is no moment or torsion constraint.

Instrument – The EOS–AM mission instruments are: ASTER, CERES, MISR, MODIS, and MOPITT.

Instrument Accommodation Equipment – Equipment required to interface the instrument to the Spacecraft.

Instrument Housekeeping Telemetry – The set of instrument data that is used, both on–board and on the ground, to determine and maintain the health and status of, and to operate the instrument. Examples are instrument status and critical temperatures.

Safe Mode – A critical mode in which a fault(s) has occurred with the Spacecraft control computers or its support systems or loss of precision attitude control. The control of the Spacecraft is passed to a backup processor which maintains the Spacecraft in an Earth–oriented, or sun–pointing attitude once safe mode is obtained. However, there is no guarantee an Earth–oriented attitude will be maintained during transition to safe mode. During Spacecraft safe mode, each instrument and housekeeping subsystem will configure to a predefined state. The instrument safe mode will be a non–science data–generating state in which the instrument is in a reduced power standby state. Spacecraft services available during safe mode will be as detailed in Appendix D of this document.

Spacecraft – A fully integrated Spacecraft comprised of the Spacecraft bus and its instruments.

Spacecraft Bus – The integrated assemblage of equipment which provides all housekeeping resources and services necessary to support the operations of an instrument set, including: mechanical support and alignment; attitude control; orbit determination and guidance; electrical power; temperature control and excess heat rejection; data communications; and data formatting, storage, and routing.

Survival Limits – The minimum temperature limits at which an instrument can be maintained indefinitely without affecting the ability of the instrument to return to normal operations.

Survival Mode – A power–critical mode in which a fault(s) seriously threatens the health and safety of the Spacecraft. Transition into the survival mode will cause nonessential housekeeping equipment and instruments to power down with power available only for survival equipment. The Spacecraft control computer will maintain full control of the Spacecraft while in the survival mode.

Units – In general, SIU units are utilized to define the interface requirements. In the event that an item is manufactured in other units, these units will be used in requirement specification. For example, if English inserts are utilized for mounting the associated dimensions (diameter + thread) will be specified in English units (inches + threads per inch).

(This page intentionally left blank.)

2 REFERENCE DOCUMENTS

The following documents are for reference and information purposes only. They do not explicitly define requirements on the instruments.

GSFC 420–02–02 26 January 1990	Earth Observing System Configuration Management Plan
MIL–HDBK–1553B	Military Standard, Aircraft Internal Time Division Command/Response Multiplex Data Bus
CCSDS 201.0–B–1 January 1987	CCSDS Recommendation for Space Data System Standards. Telecommand, Part 1: Channel Service, Architectural Specification, Blue Book, Issue–1
CCSDS 202.0–B–1 January 1987	CCSDS Recommendation for Space Data System Standards. Telecommand, Part 2: Data Routing Service, Architectural Specification, Blue Book, Issue–1
CCSDS 203.0–B–1 January 1987	CCSDS Recommendation for Space Data System Standards. Telecommand, Part 3: Data Management Service, Architectural Specification, Blue Book, Issue–1
20005400	Electromagnetic Compatibility (EMC) Handbook for the EOS–AM Spacecraft
MIL–STD–1246	Military Standard Product Cleanliness Levels and Contamination Control Program
SSP 30425 Rev. A, June 1991	Space Station Program Natural Environment Definition for Design
SP–8013 March 1969	Meteoroid Environmental Model–1969 (Near Earth to Lunar Surface)
TM 100 471 April 1989	Orbital Debris Environment for Spacecraft Designed to Operate in Low Earth Orbit

An Empirical Model of Energetic solar Proton Fluxes with Applications to Earth Orbiting Spacecraft, E.G. Stassinopoulos and J.H. King, GSFC, December 1972.

New Interplanetary Proton Fluence Model, Joan Feynman, et al., Journal of Spacecraft, Vol. 27, No. 4, July–August 1990.

AE–8: Trapped Electron Model,Vette, J.I., to be published.

(This page intentionally left blank.)

3 MECHANICAL REQUIREMENTS

Structures and Mechanisms Subsystem (SMS)

The Structures and Mechanisms Subsystem (SMS) provides the necessary structural support and mounting area for all instruments and housekeeping equipment. These functions satisfy multiple constraints including: launch environment, fairing static envelope, AM instrument set science and thermal fields–of–view (FOVs) and pointing stability. The SMS provides the release and deployment mechanisms for the high–gain antenna as well as the interface to the launch vehicle separation system. The EOS Spacecraft structure consists of the primary structure, equipment modules (EMs), equipment panels, and secondary structures which support harnessing and components mounted to the primary structure, as well as instruments.

Primary Structure

The EOS Spacecraft primary structure, shown in Figure 3–1, is configured into two major substructures: a rectangular cross–section forward truss and a hexagonal aft structure. The forward truss comprising Bays 2 through 7 consists of graphite/epoxy tubes bonded to titanium node fittings. Bulkhead 7 is a panel structure closing out Bay 7. The forward truss features steps in Bays 5 and 6 to provide fairing clearance for MODIS and ASTER–TIR. The secondary structure interfaces with the primary structure at the node fittings.

The aft structure comprises Bay 1 and is also constructed of graphite/epoxy tubes bonded to titanium node fittings. Bulkhead 1 closes out the aft structure and interfaces with the Propulsion Module structure at six node fittings. The six node fittings will each house one end of one of the six separation nuts used to separate the Spacecraft from the launch vehicle. The aft structure supports the Propulsion Module tank internally from the aft panel (Bulkhead 1). In addition, the aft structure supports one of the battery panels, power module, and CERES instruments mounted on an aft Instrument Mounting Plate (IMP). The hexagonal shape of the aft structure was chosen to facilitate load transfer to the launch vehicle by providing a larger cross section than the rectangular forward truss. This increases the bending stiffness and strength of the primary structure. The hex shape also allows for efficient packaging of the Propulsion Module and supports thrusters and propulsion system electronics. By designing the aft structure to be removable following completion of the primary structure qualification testing (static and modal), the design allows for the parallel processing of the Propulsion Module and the Spacecraft Bus.

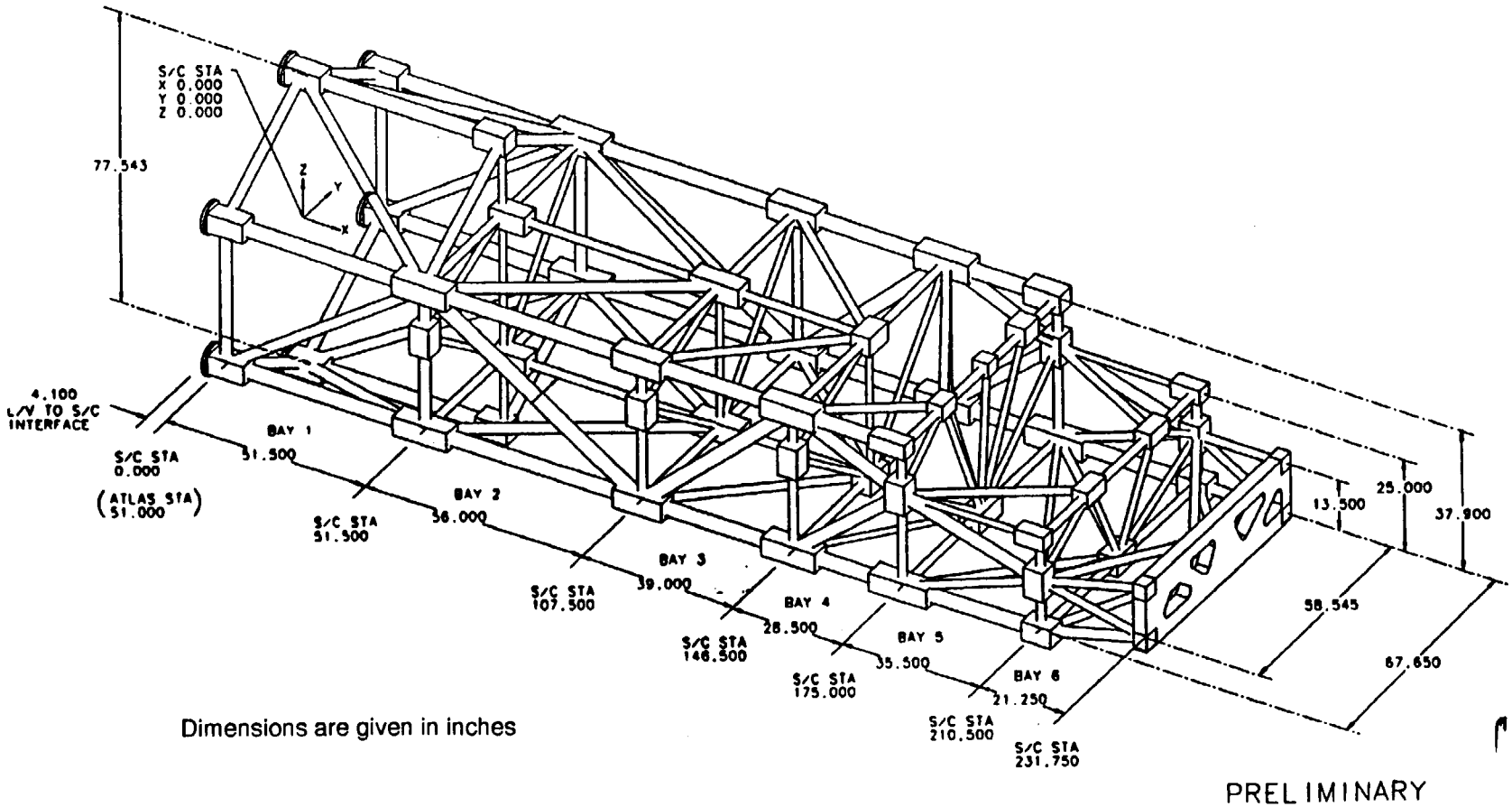

Figure 3–1. EOS–AM Primary Structure

The forward truss and aft structure rely extensively on the successful construction methods implemented on the Upper Atmosphere Research Satellite (UARS) program. The tubular graphite/epoxy members are adhesively bonded to titanium node fittings in the case of longerons and titanium end fittings for the bulkhead and diagonal members. Precision fixtures and tight dimensional tolerances are incorporated in the buildup of the truss structure. This type of construction facilitates precise alignment of instruments and housekeeping equipment. Also the graphite/epoxy members exhibit low thermal distortion allowing the EOS Spacecraft to meet on–orbit pointing requirements. The graphite material baselined for the tubes is an ultra–high modulus (UHMS) graphite which was successfully tested on the EOS program in late 1989. The epoxy material has also been successfully tested and has been used on other NASA programs (e.g., ACTS, Mars Observer).

Secondary Structures

The secondary structures are customized for each instrument depending on the instrument's location, volume, mass, thermal control configuration, FOV constraints, and pointing requirements. For the EOS–AM instrument set there are two methods of mounting: IMP–mounted and direct–mounted instruments. The IMP–mounted instruments are attached to an aluminum honeycomb core panel which has graphite/epoxy facesheets. These panels will be mounted to the primary structure kinematically via ball–joint fittings. The thickness of each panel and facesheet will be derived based upon the mass distribution and center–of–gravity offset of the respective instrument. The mounting of the instrument to the panel will be a function of the instrument base material and pointing requirements. The direct–mount secondary structures will incorporate tubular truss structures or customized mounts which mount directly to the primary structure node fittings.

Launch Vehicle Separation System

The launch vehicle separation system is comprised of six discrete separation nut systems. The head of each separation bolt is housed in a Bay 1 node fitting. The launch vehicle side of the interface houses the nut end and attaches to fittings which form part of the launch vehicle adapter. This system was chosen to allow a simpler interface to the launch vehicle and was more weight efficient than a continuous ring interface. Separation velocity is achieved by employing a set of separation springs that push off the launch vehicle adapter. The springs are designed such that a failure of one will not prevent the achievement of the necessary velocity required for proper separation.

3.1 Mechanical Interface Definitions

3.1.1 Spacecraft Mounting Interface Definition

Instruments are mounted to the Spacecraft structure by using one of two methods: an IMP–mount or a direct mount. The Spacecraft mounting interface for IMP–mounted instruments is at the IMP facesheet beneath the instrument mounting surface footprint. One or more individual instruments may be mounted to an IMP, together with appropriate accommodation equipment. The Spacecraft mounting interface for direct mounted instrument is at the lower surface of the upper bearing of the kinematic mount.

The IMPs have a core of aluminum honeycomb bonded to graphite–epoxy facesheets. Metal fittings are bonded to the facesheets and core at each corner of the IMP and some intermediate points for attaching kinematic mounts. The IMPs are designed to provide high stiffness and low thermal distortion.

Each IMP is structurally supported by the same kinematic mounts (KMs) used for direct mount instruments. The KMs minimize structural loading of both sides of the kinematic mount interface by not transmitting selected forces. This characteristic of the kinematic mounts also reduces on–orbit thermal distortions, which has large benefits in component alignment accuracy. An optical cube attached to the IMP is used for alignment purposes.

3.1.2 Coldplate Mechanical Interface Definition

The coldplate mechanical interface is between the instrument baseplate and the surface of the thermally conductive filler material which is in contact with the instrument.

3.2 Envelopes

3.2.1 Instrument Envelope Allocation

The instrument envelope is the limiting volume of space allocated to the instrument for growth during design and development and for its deployable appendages. This volume is defined by the instrument's location on the Spacecraft, its proximity to other instruments, and its optical, thermal, and calibration FOV requirements as allocated in the Unique Instrument Interface Document (UIID). Neither instruments nor Spacecraft components may not intrude into the allowable envelope of any other instrument.

3.2.1.1 Instrument Launch Phase Envelope

The launch envelope defines the allowable launch configuration volume of the instrument. In addition to flight (operational) volume restrictions, launch envelopes are restricted by the internal diameter of the launch vehicle shroud, any stowed deployables and launch vehicle ground service access requirements.

3.2.1.2 Instrument On–Orbit Envelope

The instrument on–orbit envelopes are derived from instrument configurations, field of view requirements, including neighboring instrument FOV restrictions, and swept volume of deployables, if any.

3.2.2 Instrument Envelope Documentation

The instrument envelopes are defined in the instrument UIIDs. They are used in the MICD, in addition to instrument configuration layouts, to completely define the instrument interfaces.

3.2.3 External Configuration Changes

As part of instrument definition, the MICD will contain information which will define any changes to instrument external configuration due to any deployables and/or moving parts, as well as the volume required for operation.

3.3 Fields of View

3.3.1 Fields–of–View Allocation

FOV allocation, whether science, calibration, or thermal, will be documented in the UIIDs. These FOV definitions will be referenced to the defined origin of the allocated envelope of the instrument.

3.3.2 Fields–of–View Accommodation

The location of each instrument component will be documented in the MICD and will accommodate instrument optical and thermal FOV requirements within the constraints of the overall mission. The definition of each FOV should be of sufficient detail to specify the actual requirement and any margins which are applied to the overall FOV requirement.

3.3.3 Fields–of–View Documentation

The actual science and calibration FOV accommodation is documented in the MICD. The actual thermal FOV accommodation is documented in the Thermal Interface Control Document (TICD). These definitions will include the origin (or virtual origin) and the swept or scanned field, represented as a FOV projection, as documented in the UIID. It will also include a wide angle perspective of the FOVs, illustrating any intrusions to be mutually agreed upon.

3.4 Mass Properties

3.4.1 Instrument Mass Allocation

Mass measurements of each instrument component will be used in predicting instrument dynamic characteristics during launch, insertion into orbit, and orbital operations. The parameters must be determined for all configurations (i.e., stowed, deployed, operational, etc.) to evaluate flight performance in accordance with mission requirements. Instrument mass allocations contained in the UIID represent the maximum allowable mass for all flight components comprising an instrument, and represent all flight hardware provided by the Instrument Provider.

3.4.2 Instrument Mass Measurement

The Instrument Provider will measure the mass of each separately–mounted instrument component to the tolerance defined. The tolerance is specified in absolute terms, rather than as a percentage because, for very large instruments, a large amount of uncertainty would accompany the measurements, which would affect Spacecraft center of mass results. The Spacecraft Provider will verify instrument component mass measurement during the instrument receiving process.

3.4.3 Instrument Mass Documentation

The actual mass of each instrument component will be documented in the MICD. This information is used to generate the mass properties of the Spacecraft. Prior to flight hardware delivery, the instrument mass is documented in terms of percentage estimated, calculated, and measured. The final MICD mass should be 100% measured.

3.4.4 Instrument Mass Property Report

The instrument mass property report submitted to GSFC by the Instrument Providers will be forwarded to the Spacecraft Provider for inclusion into the MICD and from there into the Spacecraft mass properties report.

3.4.5 Instrument Mass Variability

3.4.5.1 Instrument Mass Variability Allocation

Mass variability refers to the planned expulsion of mass by an instrument or other subsystem during the course of the Spacecraft mission. For the Spacecraft, as an example, this refers to the Propulsion Module which expels combustion by-products to produce thrust. In the case of instruments, this could take the form of cryogenic

expendables which may be used to cool detectors to very low temperatures. Any mass variability that is required for instrument operation should not be over and above the UIID mass allocation.

3.4.5.2 Instrument Mass Variability Documentation

Any mass variability, which is allocated in the UIID, will be documented in the MICD drawing. The minimum information required by the Spacecraft Provider for instruments which use expendables is the type of substance, total mass expended, and a time history of the mass loss.

3.4.6 Center of Mass Documentation

The instrument center of mass of each instrument component will be used in predicting instrument dynamic characteristics during launch, insertion into orbit, and orbital operations. The parameters must be defined for all configuration (i.e., stowed, deployed, operational, etc.) to evaluate flight performance in accordance with mission requirements. The center of mass of the instrument components will be documented in the instrument MICD, and be referenced to the instrument component origin point agreed to by the Spacecraft Provider and Instrument Provider.

3.4.7 Moments of Inertia

3.4.7.1 Moments of Inertia Determination

The moments of inertia for each instrument component will be used in predicting instrument dynamic characteristics during launch, insertion into orbit, and orbital operations. The parameters must be defined for all configurations (i.e., stowed, deployed, operational, etc.) to evaluate flight performance in accordance with mission requirements. The Instrument Provider may choose either measurement or analysis for this determination.

3.4.7.2 Moments of Inertia Accuracy

The accuracy of the instrument moment of inertia values must be ±10% of the actual moment of inertia.

3.4.7.3 Moments of Inertia Documentation

The MICDs will document all mass property information, including the moments of inertia. The MICD will also document whether the information was measured or calculated.

3.4.7.4 Moments of Inertia Variation Documentation

For instruments with movable mechanisms, the variation of moments of inertia will be documented in the MICD. The documentation should be in the form of a nominal value with a minimum and maximum variation from the nominal. In addition, if the instrument has a launch position that is different from the nominal, then moments of inertia for the launch configuration will also be documented in the MICD.

3.4.8 Products of Inertia

3.4.8.1 Product of Inertia Determination

The products of inertia, for each instrument component, will be used in predicting instrument dynamic characteristics during launch, insertion into orbit, and orbital operations. The parameters must be defined for all configurations (i.e., stowed, deployed, operational, etc.) to evaluate flight performance in accordance with mission requirements. The Instrument Provider may choose either measurement or analysis for this determination.

3.4.8.2 Product of Inertia Accuracy

The accuracy of the instrument product of inertia values must be ±10% of the actual product of inertia.

3.4.8.3 Product of Inertia Documentation

The MICDs will document all mass property information, including the product of inertia. The MICD will also document whether the information was measured or calculated.

3.4.8.4 Product of Inertia Variation Documentation

For instruments with movable mechanisms, the variation of product of inertia will be documented in the MICD. The documentation should be in the form of a nominal value with a minimum and maximum variation from the nominal. In addition, if the instrument has a launch position that is different from the nominal, then products of inertia for the launch configuration will also be documented in the MICD.

3.5 Mounting

3.5.1 Mounting Method

The two instrument component mounting methods in use are kinematic mounting and plate–mounting. Plate–mounted instruments are attached to the Spacecraft secondary plate structure by the use of a sufficient quantity of mounting bolts to effect an adequate retention of the instrument. Kinematic mount instruments are attached by three or more kinematic mounts directly to the Spacecraft structural node fittings.

3.5.2 Mounting Interface

3.5.2.1 Mounting Interface Documentation

The MICD will document the instrument mounting Interface. This will take the form of defining instrument specific location, surface properties, hole sizes, number of fasteners, washers, thermal isolators, etc. In the case of kinematically mounted instruments, the MICD will also define the kinematic mount bearing configuration with a full description of hole sizes, their location and any surface preparation requirements.

3.5.2.2 Mounting Hole Coordinates and Dimensions

The mounting hole details will be defined in the MICD drawing. Identification of the instrument component origin and its relation to the instrument mounting hole pattern as well as the Spacecraft coordinate system will totally define the location of each mounting hole.

3.5.3 Mounting Hardware

3.5.3.1 Mounting Hardware Provider

Mounting hardware provided by the Spacecraft Provider includes fasteners and associated washers and nuts which are used to fasten an instrument to the Spacecraft structure. The specific hardware for each instrument will be different depending on the method of mounting.

3.5.3.2 Mounting Hardware Documentation

The detailed definitions of bolts, washers, spacers and their locations and preload levels will be defined in a table in the MICD drawing.

3.5.3.3 Mounting Bolts

The mounting bolts to be used for instrument–to–Spacecraft fastening will be procured to MIL–STD–1515A as required by the GIIS.

3.5.4 Kinematic Mounts

3.5.4.1 Kinematic Mount Provider

The kinematic mounts will be provided by the Spacecraft Provider. This includes a set of test mounts and a set of flight mounts.

3.5.4.1.1 Test Kinematic Mount Delivery

The test mounts will be provided with mounting hardware which includes all bolts, washers and bearing retaining plates. The test mounts will be functionally identical to the flight mounts and are intended to be used for instrument testing.

On a schedule that is mutually agreed to by the Instrument Provider and the Spacecraft Provider, one set of test mounts will be supplied to the Instrument Provider for each component that uses the kinematic mount method of attaching to the Spacecraft. This set would include bearing assemblies which would attach to the instrument mounting points, mount bodies, mounting bolts and associated washers and retaining plates.

3.5.4.1.2 Flight Kinematic Mount Delivery

On a schedule that is mutually agreed to by the Instrument Provider and the Spacecraft Provider, the flight set of bearing assemblies, mount bodies, mounting bolts and associated washers and retaining plates will be shipped to the Instrument Provider by the Spacecraft Provider for installation onto the flight instrument.

3.5.4.1.3 Instrument Kinematic Mount Assembly

The Instrument Provider must install the flight kinematic mount bearing assemblies before the instrument is shipped to the Spacecraft Provider. It is suggested that final alignment measurements of the instrument be made after installation of the flight bearings.

3.5.4.2 Kinematic Mount Characteristics

3.5.4.2.1 Kinematic Mount Structure

The kinematic mounts consist of a bearing assembly that attaches to the instrument mounting feet and a body assembly that differs for the type of mount (KM1, KM2 or KM3). The body assembly attaches to the Spacecraft structure via bolts and provides a stud which accepts the instrument bearing assembly. It is recommended that the kinematic mount bearing assembly be attached at the neutral axis of the instrument baseplate.

3.5.4.2.2 Kinematic Mount Breakaway Torque

The breakaway torque of the kinematic mounts is a measure of the torque required to move the mount bearings from a static position. This is important to control the alignment performance during jitter.

3.5.4.2.3 Kinematic Mount Angular Freedom of Movement

The angular freedom of movement of a kinematic mount refers to the limit of its ability to relieve thermal distortions and dynamic deflections. Distortions that exceed the indicated limits would cause the mount to become rigid (non–kinematic).

3.5.4.2.4 Kinematic Mount Thermal Conductance

Kinematic mount thermal conductance refers to the capability of the mount to conduct heat between mounted equipment and the primary structure. This is important for predicting on–orbit component temperatures.

3.5.4.3 Kinematic Mounting

The kinematic mount method of attaching instruments to the Spacecraft structure is used for relatively large and/or alignment critical instruments. It provides a way of attaching an instrument to the Spacecraft structure that minimizes any bending moments that may be transferred from the Spacecraft to the instrument. This attachment method relies on the use of three types of kinematic mounts. The mount types are as follows: a) the KM1 mount which restrains translational motion in one axis normal to the mounting plane, b) the KM2 mount which restrains translational motion in two axes with one axis restraining motion normal to the mounting plane, c) the KM3 mount which restrains translational motion in three axes. It is required that the KM2 unrestrained axis of translational motion shall be parallel to a line drawn between the KM2 and KM3 mounts.

Normally, an instrument would use one KM3, one KM2 and one or more KM1 mounts. In the ideal case, a three point configuration is preferred since it provides the easiest and most accurate mounting method for alignment purposes. The total number of mounting points should be minimized, with three being the minimum, since it will not transfer any bending moments to the instrument, except for the bearing breakaway torques which are very small. In the case of a four point mount, the potential exists for additional torques caused by any dimensional differences of the height of the fourth mount in relation to the other three. An attempt will be made to shim the mounts, if required, in order to minimize this effect. Deviations to the optional three–point mount configuration are documented in the UIID.

3.5.5 Spacecraft Mounting Surface

3.5.5.1 Spacecraft Mounting Surface Flatness

The Spacecraft mounting surface flatness requirement applies to plate mounting locations only.

3.5.5.2 Spacecraft Mounting Surface Planarity

The Spacecraft mounting surface planarity requirement applies to plate mounting locations only.

3.5.6 Instrument Mounting Surface

3.5.6.1 Instrument Mounting Surface Flatness

The instrument mounting surface flatness is documented in the MICD drawing.

3.5.6.2 Instrument Mounting Surface Planarity

The instrument mounting surface planarity is documented in the MICD drawing.

3.5.7 Mounting Location

3.5.7.1 Instrument Mounting Location

The Spacecraft Provider will determine the locations of all individual instrument and Spacecraft subsystem components. The mounting locations are chosen based on instrument and subsystem requirements such as volume, FOV, thermal requirements, and deployables. The instrument mounting locations are developed from an iterative approach that considers instrument requirements as they relate to other instruments or Spacecraft subsystems in the proximity of the subject instrument. This process occurs with the full knowledge of the Instrument Provider.

3.5.7.2 Instrument Accommodation Equipment Mounting Location

The location of the instrument accommodation equipment is the responsibility of the Spacecraft Provider. Instrument accommodation equipment includes Bus Data Units (BDU), Fuse Distribution Boxes (FDB), Heater Controller Electronics (HCE), and Interface Connector Panels (ICP).

3.5.7.3 Mounting Location Documentation

The location of all instrument related mounting information, whether instrument components or instrument accommodation equipment, will be defined and documented in the MICD drawing. The coordinates of the instrument components will be in the MICD tables.

3.5.8 Drill Templates

3.5.8.1 Drill Template Usage

All instrument–to–Spacecraft mounting interfaces will be implemented using coordinated tooling (drill plates). These drill plates are intended to be used for the drilling of both instrument and Spacecraft sides of mounting interfaces, including all instrument components and all Spacecraft–provided accommodation equipment.

3.5.8.2 Drill Template Fabrication Requirements

Requirements for surface flatness and finish are the very minimum acceptable, and the Instrument Provider is encouraged to exceed these minimum requirements. In addition, some judgement is required for the thickness of the drill plates. The 12.7 mm nominal thickness for the drill plates is acceptable for relatively small drill plates, however, it is not sufficient for relatively large drill templates.

The drill template will be marked to indicate which side of the template will used for Spacecraft drilling and which side is used for instrument drilling. It is suggested that the Spacecraft coordinates be marked on the plate to define the orientation of the plate for drilling the Spacecraft interface.

It is suggested that the drill templates be manufactured with steel liners which will then accept the proper size slip drill bushing for drilling the correct size holes. To ensure the usability of the template for both sides of the interface, the template provider should verify that the steel liners are installed below the level of both template surfaces. In this way the drill templates can be used directly to drill all the interface holes required, including pilot holes for both sides of the interface. This approach is recommended to be used for IMP mounted as well as kinematically mounted instrument components.

3.5.8.3 Optically Aligned Component Drill Template Provider

For alignment critical instruments, the drill plate will provide an optical cube which will enable the Spacecraft Provider to transfer instrument alignment information to the Spacecraft coordinate frame for drilling of the instrument–to–Spacecraft interfaces. The cube should be located in the approximate location of the flight instrument cube to allow for more repeatable alignment test results. For the protection of the alignment cube, a cover should be provided that is easily removed for alignment measurement.

3.5.8.4 Non–optically Aligned Component Drill Template Provider

Unlike optically aligned components, the Instrument Provider will provide the drill template for components that do not need optical alignment, such as electronics boxes.

3.6 Alignment

The following paragraphs discuss the various coordinate frames within which an instrument is aligned, and procedures for alignment.

Orbital Reference Coordinate Frame – The Orbital Reference Coordinate Frame is right–handed and orthogonal. The +Z–axis is a line from the Spacecraft CM to the center of the Earth. The +Y–axis is a line normal to the Z–axis and to the Spacecraft instantaneous velocity vector (i.e., negative orbit normal direction). The +X–axis completes the right hand set. Due to orbit eccentricity, the X–axis and the instantaneous Spacecraft velocity vector are not co–aligned.

Spacecraft Body–Fixed Coordinate Frame – The Spacecraft Body–Fixed Coordinate Frame, depicted in Figure 3–2, is right–handed and orthogonal. The origin is the geometric center of bulkhead 1. During normal science mode operations, the Z–axis passes through

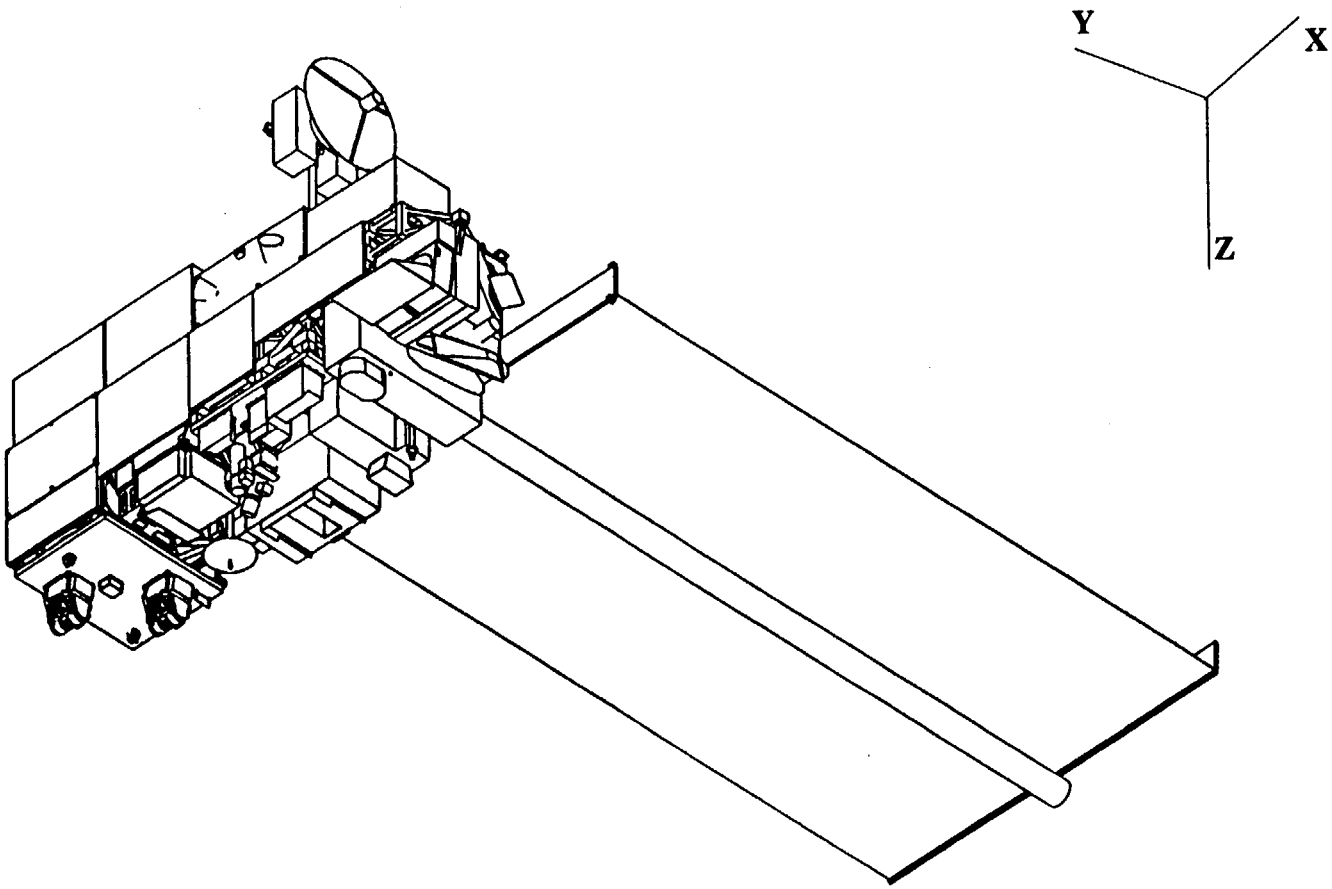

Figure 3–7. Spacecraft Body–Fixed Reference Coordinate Frame

the center of the earth, with +Z being nadir (i.e., toward the earth). The Y–axis is nominally along the orbit normal, with the +Y toward the anti–sun side. The X–axis is normal to the Spacecraft separation plane with +X in the general direction of the Spacecraft velocity vector.

Spacecraft Reference Axes – The Spacecraft Reference Axes represents a right–handed, orthogonal frame which is nominally aligned with the Spacecraft Body–Fixed Coordinate Frame prior to launch. This coordinate frame is defined by the Navigation Base Reference (NBR) which is located in the GN&C Sensor Equipment Module on the optical bench. The Spacecraft attitude control system attempts to align the Spacecraft Reference Coordinate Frame with the Orbital Reference Coordinate Frame.

Instrument Reference Axes – The Instrument Reference Coordinate Frame is right–handed, fixed in the instrument, and nominally aligned to the Spacecraft Reference Axes (when the instrument is mounted to the Spacecraft). The instrument alignment cube defines the coordinate frame to which instrument pointing can be referenced.

The Instrument Provider is responsible for the alignment and alignment stability between the instrument mounting base, the instrument cube, and the instrument boresight. The Spacecraft Integrator is responsible for the determination and verification of the alignment of the instrument optical cube with respect to the Spacecraft Reference Coordinate Frame. The general approach for alignment of instruments is outlined below.

Step 1. During manufacture of the Spacecraft structure, an optical cube, referred to as the Master Reference Cube (MRC), is attached to the structure and aligned precisely with the Spacecraft Body–Fixed Coordinate Frame. The MRC is placed to maximize its visibility from each mounting location.

Step 2. Following qualification and acceptance of the Navigation Base Plate (the portion of the Guidance, Navigation and Control (GN&C) sensor Equipment Module (EM) containing the NBR cube (NC)), the Navigation Base Plate is mounted to the Spacecraft structure. The orientation of the NBR cube with respect to the MRC is determined, and the transformation matrix between the reference frames is derived.

Step 3. As part of the Spacecraft alignment process, the instrument drill templates, along with instrument Line–of–Sight information, are used to position the instrument mounting bolt pattern on the structure to null out positional errors and drill the instrument mount interfaces. This process will attempt to null yaw errors as much as possible. Pitch and roll errors will be nulled using shims if required. The alignment process is basically the same whether the instrument is mounted on a IMP or on kinematic mounts.

Step 4. During instrument integration, the instrument is mounted on Spacecraft structure. Alignment measurements are made that relate the instrument alignment cube to the MRC. If measurements indicate that the initial alignment, derived from the drill templates, has changed then a re–shimming operation will attempt to null out the remaining errors.

3.6.1 Instrument Optical Alignment Cube

The alignment cube surfaces are measured at the Instrument Provider's facility to relate the Instrument Line of Sight (LOS), which is a vector that defines the desired pointing direction for the instrument, to the optical cube surfaces. These measured angles are provided to the Spacecraft Provider along with the drill template. This information is used by the Spacecraft Provider to drill the instrument mounting interface.

3.6.2 Optical Alignment Cube Requirements

3.6.2.1 Optical Alignment Cube Surface Area

An optical cube minimum size requirement is necessary to have a sufficiently bright optical return from alignment cubes. This specified surface area of each face is a nominal value. Small differences are acceptable when purchasing standard optical cubes.

3.6.2.2 Optical Alignment Cube Surface Orthogonality

As a minimum, the instrument is expected to provide a cube that has two orthogonal sides usable by the Spacecraft Provider for alignment measurement. The viewable sides of the instrument cube are to be negotiated between the Instrument and Spacecraft Providers. The required cube orthogonality is intended to minimize the measurement error contribution to the instrument pointing error budget.

3.6.2.3 Optical Alignment Cube Documentation

The alignment cube location and size will be documented in the MICD drawing. The instrument alignment data relating instrument LOS to the cube faces will be documented in the MICD tables. The MICD tables will also be used for documenting all other instrument alignment information including final Spacecraft–to–instrument alignment measurements.

3.6.3 Alignment Responsibility

As part of the overall Spacecraft integration function, the Spacecraft Provider will align the instruments to the Spacecraft structure. The alignment process will utilize the instrument drill templates for the yaw axis alignment of the mounting bolt pattern.

3.6.4 Alignment Angles

Alignment angle information is documented in the MICD tables. The documented information consists of instrument optical axis definition with respect to the instrument alignment cube, which in turn is measured with respect to the instrument drill plate cube. Any other alignment measurements that are used to define instrument pointing direction with respect to the Spacecraft coordinate frame are also documented in the MICD tables. This information is used for the location, alignment and drilling of the instrument–to–Spacecraft interface.

3.6.5 Pointing Allocations

The UIID contains the pointing allocations that will be used by the Spacecraft Provider to develop the overall Spacecraft pointing error budget and alignment plan for the Spacecraft.

3.7 General Structural Design Requirements

Instrument structural loads apply in all directions. For instruments composed of two or more components, design loads for each component are to be determined based on the individual component mass. Design loads in the GIIS may be updated by the Spacecraft Provider as required after Spacecraft coupled loads analyses.

The design limit loads apply only to design of the mechanical interface. Loads at locations other than the interface are expected to be higher.

Instruments with large surface areas and low mass density require special consideration, as airborne acoustic loads will be significant.

3.7.1 Structural Support

3.7.1.1 Instrument Structural Support

The instrument structural support consists of either an IMP or secondary/primary structure. Secondary structure refers to Spacecraft structure which is attached to the primary truss of the Spacecraft. Primary structure refers to the Spacecraft truss itself.

3.7.1.2 Coldplate Structural Support

If an instrument uses a coldplate, the instrument structure must be designed to support the mass of the coldplate, since the coldplate attaches directly to the instrument. It is attached to the instrument via 24 mounting bolts. The bolt pattern and placement with respect to the instrument origin are mutually agreed to by the Instrument Provider and Spacecraft Provider.

3.7.2 Instrument Structural Dynamics

The minimum fixed base frequency for instruments mounted on an instrument mounting plate is specified for instruments rigidly fixed at the interface degrees of freedom that connect the instruments to the plate. The exact definition of the "fixed base" is given in section 1.3 of the GIIS and this document. For direct mounted instruments, the minimum fixed base frequency is specified for the instrument including effects of the kinematic mount flexibility. The minimum fixed base frequency requirement for the instrument was established to ensure that dynamic responses of the instruments under launch environments are within the design load specifications.

In order to minimize dynamic responses in the instruments, the minimum mounting frequencies of instruments are also imposed on the integrated Spacecraft design. The instrument mounting frequencies for the instruments are also specified at 35 Hz. Since the instrument mounting frequencies are expected to drop below the instrument fixed base frequencies due to compliances of the Spacecraft structure, it is desirable to design the instrument structures to have a minimum frequency as high as possible for a given instrument mass budget.

3.7.3 Interface Design Limit Loads Requirements

3.7.3.1 Limit Loads Application

The limit loads defined for the instrument components are to be applied at the center of mass of the component, which, as referred to here, is for the launch configuration of the component. The instrument limit loads include the low frequency contributions from all environments, including random vibration.

3.7.3.2 Limit Loads Application Axis

The limit loads, as discussed above, are to be applied one axis at a time and in such a way as to result in maximum stresses to the instrument component.

3.7.3.3 Interface Design Limit Loads

The interface design limit loads are defined separately and specifically for each instrument component in Table 3–3 of the GIIS.

3.7.3.4 Random Vibration Levels

The random vibration levels are defined separately and specifically for each instrument component in Table 3–3 of the GIIS.

3.7.4 Coupled–Loads Analysis

3.7.4.1 Coupled–Loads Analysis Responsibility

Qualification of the Spacecraft for the expected structural loads environment requires a combination of test and analysis. A test–verified finite element model of the Spacecraft must be developed, and a coupled loads analysis of the Spacecraft/launch vehicle must be performed. The analytical results define the limit loads for the Spacecraft, and demonstrate compatibility with the launch vehicle for all critical phases of the mission.

The coupled loads analysis will be performed by the Spacecraft Provider in conjunction with the Launch Vehicle Provider. The instrument Finite Element Models (FEMs) will be used in this analysis.

3.7.4.2 Coupled–Loads Analysis Results

The Spacecraft Provider will obtain results from the combined Spacecraft/launch vehicle coupled loads analysis and forward this information to the Instrument Provider. The Instrument Provider is encouraged to request information from the Spacecraft Provider that would best benefit the instrument design. Unless otherwise requested, the Instrument Provider will be supplied only interface loads as a result of the coupled loads analysis.

3.7.5 Pressurized System Design

The design of pressurized systems within instruments will be governed by the requirements of the GIIS.

3.7.6 Environmental Requirements

3.7.6.1 Launch Survivability Design Requirements

3.7.6.1.1 Shock

Design requirements are imposed on the Instrument Providers to ensure that instruments survive and operate after being exposed to anticipated launch–specific environments. A shock environment profile and specific peak shock values for each instrument are in the GIIS.

3.7.6.1.2 Launch Pressure Profile

Atmospheric pressure decay design requirements are imposed on the Instrument Providers to ensure that instruments survive and operate after being exposed to anticipated launch–specific environments.

3.7.6.1.3 Acoustics

Acoustic level requirements are imposed on the Instrument Providers to ensure that instruments survive and operate after being exposed to anticipated launch–specific environments. Acceptance and qualification/protoflight acoustic level values are defined separately in the GIIS.

3.7.6.2 Orbital Environment

Requirements pertaining to orbit environment are designed to limit the perturbing forces on the Spacecraft by any one instrument. In addition, levels are defined for maximum on–orbit accelerations. The Instrument Provider will define and submit to the Spacecraft Provider a definition of all disturbance sources so that a complete and accurate prediction of Spacecraft performance can be made. The Instrument Provider will submit this information for inclusion into the MICD.

As a result of the analyses performed by the Spacecraft Provider, predictions of Spacecraft and instrument pointing performance will be made available to the instrument community.

It should be mentioned that the perturbing effects of one time events, such as door openings, are also to be evaluated for their effect on Spacecraft control.

3.7.6.2.1 Acceleration

Acceleration design requirements are imposed on the Instrument Providers to ensure that instruments survive and operate after being exposed to on–orbit acceleration.

3.7.6.2.2 Torque

Requirements pertaining to torque allowables are designed to limit the perturbing forces on the Spacecraft by any one instrument. These include forces from continuously moving parts as well as one–time actuations, such as door openings. This information will be included in the MICD tables, including mass being moved, axis of rotation, and cycle duration.

3.7.6.2.3 Force

Requirements pertaining to rotational torques are designed to limit perturbing forces on the Spacecraft by any one instrument. This information will be included in the MICD tables, including mass being moved, axis of rotation, inertia, cycle duration, step time, and impulse.

3.7.6.2.4 Angular Momentum

Requirements pertaining to angular momentum are designed to limit the perturbing forces on the Spacecraft by any one instrument. This information will be included in the MICD tables, including mass being moved, inertia, dynamic imbalances and static imbalances.

3.8 Finite Element Model

The final test–verified instrument FEM will be used to support the verification load cycle. In addition, the test–verified model will be used to predict the maximum expected load for each critical loading condition, including handling and transportation, vibro–acoustic effects during lift–off, insertion into final orbit, and orbital operations.

The Instrument Provider is responsible for the performance of a modal survey on the instrument hardware to measure the actual dynamic behavior up to 70 Hz. The instrument FEM will be adjusted by the Instrument Provider to agree with the measured frequencies and mode shapes. Test verification for instruments with fundamental fixed–base modes above 70 Hz may be limited to a frequency verification test such as a low level sine sweep.

Instruments which incorporate elements that are deployed on–orbit, or have mechanical movements which affect Spacecraft stability, should also supply FEMs of the on–orbit configurations. The FEMs of these mechanisms should be of sufficient fidelity to predict modes up to 20 Hz.

Dynamic responses of the Spacecraft under launch environments will be investigated to verify that the environments are within the original design specifications. Three load cycles are planned to coincide with the completion of each of the following design and test phases: Preliminary Design Review, Critical Design Review, and Flight Readiness Review.

Modal survey tests will be performed on the Spacecraft primary structure and Qualification Test Models of the EMs and IMPs. The modal tests will verify the dynamic characteristics of the structure, and the test results will be used to update the structure FEMS which will then be used in the verification load cycle. This ensures that the load paths and dynamic characteristics are properly represented in the FEM.

3.9 Instrument Mass Model

Instrument mass models will be designed and built by the Spacecraft Provider to simulate the mass properties of instrument components. These mass models will be used in structural verification tests as well as alignment verification testing for 1g effects and remount repeatability.

As part of their design, the instrument mass models will also have an optical cube that will duplicate the function of the actual instrument cube. This cube will be used as a reference so that after the structural verification testing of the Spacecraft structure, a measurement can be made to verify that the instrument mounting structure meets its error budget requirements.

3.10 Instrument Mechanisms

Currently, power is not available to the instruments at launch. Therefore, instrument mechanism restraint must be accomplished by mechanical means.

3.10.1 Caging During Test and Launch

Instruments which have mechanisms requiring restraint for test or launch should be designed so that they are able to be released and re–latched by instrument command and by the use of a manual tool.

3.10.2 Caging On–Orbit

Instruments which have mechanisms requiring restraint until some point on–orbit should be designed so that they are able to be released and re–latched by instrument command. This implies that all deployments and/or stows of mechanisms can only be performed as a result of deliberate actions of Spacecraft controllers. The requirement disallows the use of timers and implicit commands stored in the instrument's memories for either the cage or uncage functions of mechanisms.

3.10.3 Captive Hardware

All ground support equipment, attaching to or in the proximity of instruments and/or Spacecraft, which is used in a protective or support role for instrument testing, shipping etc. is expected to be designed and fabricated with captive hardware. The purpose of this requirement is to prevent the inadvertent loss of fasteners or other potentially destructive hardware near the instrument and/or Spacecraft. This rule is strictly adhered to during Spacecraft testing and especially during launch operations.

3.10.4 Sealed Hardware

All electro–explosive devices intended to be used on the EOS–AM Spacecraft are required to be sealed to prevent the expulsion of resultant gasses. This requirement is imposed to satisfy contamination requirements of the instruments as well as the Spacecraft.

3.11 Venting Forces

3.11.1 Continuous Venting Forces

Venting forces add to the disturbances imposed on the Spacecraft. These forces can be the result of gas escaping from enclosed areas, as in outgassing blankets or other cavities. They also can be the result of planned venting of expendables such as cryogens. These disturbances will degrade the pointing performance of the Spacecraft.

3.11.2 Random Venting Impulses

Random venting impulses are limited due to the fact that they also can add to the disturbances on the Spacecraft.

3.11.3 Thrust Direction Adjustment

For instruments which use expendables, a way of directing the vented mass away from the Spacecraft will be developed jointly by the Instrument and Spacecraft Providers. The effort at the Spacecraft level will minimize the effect of this venting on the Spacecraft and other instruments. The vent direction may also be used in a beneficial way to aid in orbit maintenance.

3.11.4 Venting Force Documentation

The specifics of venting mass from instruments will be documented in the MICD tables. If the venting is related to expendables, then a time history of mass loss will also be documented in the MICD tables.

3.12 Coldplate Mechanical Interface Requirements

The mechanical specifications of the coldplate are listed in Table 3–6 of the GIIS. Line bend radii and insulation thickness must be taken into account when determining the mounting location of the coldplate. Tight clearances between instrument components limit the space available for coldplate lines.

3.12.1 Coldplate Mounting

3.12.1.1 Coldplate Mounting Bolts

The instrument should be designed with threaded inserts to accept the mounting bolts which attach the coldplate. The details of the type of bolts, washers etc. will be documented in the instrument MICD drawing.

3.12.1.2 Coldplate Bolt Pattern

The bolt pattern specified in Figure 3–8 of the GIIS attempts to ensure a contact pressure between the coldplate and the instrument which will meet the temperature gradient requirements for the coldplate interface.

3.12.1.3 Coldplate Mounting Hardware Provider

The coldplate mounting hardware will be provided by the Spacecraft Provider with the flight coldplate delivery.

3.12.2 Instrument Surface for Coldplate Mechanical Interface

3.12.2.1 Instrument Surface Flatness

The instrument surface flatness requirement applies to the instrument surface which will be in direct contact with the Spacecraft–provided coldplate. Instrument thermal performance depends on the quality of the surface. This will maximize the heat throughput and minimize any gradients across the instrument–to–coldplate interface. Instrument Providers are encouraged to meet or exceed, if at all possible, these minimum requirements.

3.12.2.2 Instrument Surface Finish

The GIIS requirements are a minimum to achieve proper contact pressure across the coldplate interface.

3.12.3 Coldplate Drill Template

The coldplate drill template will be designed and built by the Spacecraft Provider. The drill template will have steel liner bushings which will accept the appropriate slip drill bushings for drilling the coldplate and the instrument interface. The Spacecraft Provider will provide the slip drill bushings for instrument drilling.

3.12.3.1 Coldplate Drill Template Usage

Instrument–to–coldplate mounting interfaces will be implemented using coordinated tooling (drill plates). These drill plates are intended to be used for the drilling of both instrument and Spacecraft sides of mounting interfaces.

3.12.4 Coldplate Mounting Surface Area

The active coldplate mounting surface area is shown cross–hatched in Figure 3–8 of the GIIS. The inactive area consists of plumbing manifolds.

3.12.5 Coldplate Mounting Surface

The coldplate mounting surface is the surface of the coldplate which will make contact with the coldplate interface filler.

3.12.5.1 Coldplate Mounting Surface Flatness

The coldplate mounting surface flatness requirement applies to the surface of the coldplate in direct contact with the instrument. Instrument thermal performance depends on the quality of the surface. This will maximize the heat throughput and minimize any gradients across the instrument–to–coldplate interface.

3.12.5.2 Coldplate Mounting Surface Finish

The GIIS requirements are a minimum to achieve proper contact pressure across the coldplate interface.

3.12.6 Coldplate Mechanical Interface Filler Installation Responsibility

The thermally conductive filler between the coldplate and the instrument will be provided by the Spacecraft Provider.

3.12.7 Coldplate Mechanical Interface Filler Installation Responsibility Documentation

The filler material used and the procedures for preparation and application will be documented in the ICD.

3.12.8 Coldplate Mass Properties

The coldplate mass properties are defined in Table 3–6 of the GIIS.

3.13 Coldplate Plumbing

3.13.1 Coldplate Plumbing Provider

The Spacecraft Provider will supply the entire CPHTS. As part of this system, the coldplate plumbing will also be provided. Stainless steel, welded fluid lines are used to connect the coldplate to the CPHTS radiator for both the primary and redundant systems. The Spacecraft Provider performs the integration of the flight coldplate to the instrument.

3.13.2 Coldplate Plumbing Support Provider

The mechanical support required for the coldplate plumbing will be designed and implemented by a mutual effort between the Instrument Provider and Spacecraft Provider.

3.13.3 Coldplate Plumbing Support Documentation

The MICD drawing will show the details of the coldplate plumbing mechanical support.

3.13.4 Coldplate Plumbing Location

The location of all plumbing related to the CPHTS will be documented in the MICD drawing. This will include details of the flight cooling loop plumbing as well as any required plumbing for test purposes.

3.13.5 Coldplate Plumbing Clearance

The coldplate plumbing clearance is **TBD**. Plumbing layouts will be forwarded to the instrument teams when that information is available. Eventually, these will be documented in the MICD drawing.

3.13.6 Coldplate Plumbing Documentation

The MICD drawing will shown the details of the coldplate plumbing. This will include plumbing layout, clearances and location.

3.13.7 Coldplate Plumbing Dimensions and Mass Properties

The coldplate plumbing dimensions and mass properties are defined in Table 3–6 of the GIIS.

3.14 Harnesses

3.14.1 Harness Provider

The Spacecraft harness uses shielding and/or physical separation to segregate signal categories and redundant cables from other harness assemblies. In particular, all pyrotechnic cabling is physically isolated.

Major trunk segments are attached to structure longerons, and run beneath the EMs and IMPs. Harness branches connect the trunks to the EMs, instruments, core–mounted equipment, umbilical, and Ground Support Equipment (GSE) connectors.

The Spacecraft flight harness will be provided by the Spacecraft Provider based on interface definitions from Instrument Providers and Spacecraft subsystems.

3.14.2 Harness Hardware Documentation

Electrical hardware descriptions and physical harness information, such as service loops, connector orientation, connector location etc. will be documented in the MICD drawing.

3.14.3 Harness Wiring Requirements

All instrument connector pin functions and connections will be documented in the EICD. This documentation will include the requirements for wire size and type as well as provide a first level description of interface circuitry for all instrument–to–Spacecraft electrical interfaces.

3.14.4 Tie Points

3.14.4.1 Tie Point Locations and Provider

The harness tie points may consist of individual cable clamps bolted to the instrument accommodation hardware. They may also consist of lacing clips bonded with epoxy adhesive to the instrument accommodation hardware.

The definition of harness tie points and their locations will be determined during the Spacecraft harness mockup effort. The definition of the number, location and description of these tie points will be be determined by mutual agreement between the Instrument Provider and Spacecraft Provider.

3.14.4.2 Tie Point Documentation

The harness tie points will be documented in the MICD drawing.

3.14.5 Connectors

3.14.5.1 Connector Mating

Connector mating is being planned as not requiring the use of special tools. However, the use of standard tools such as screwdrivers is not precluded.

3.14.5.2 Connector Clearance

A minimum clearance envelope around each connector is specified in order to provide adequate space for the mating of any one connector without having to mate/demate other connectors in its vicinity.

3.14.5.3 Connector Location

Connector areas will be detailed in the MICD drawing. The connector types will be in the EICD. Connector location will be used to define harness routing at the Spacecraft level.

3.14.5.4 Keying

Connector assemblies should be selected to protect against the inadvertent mating of dissimilar functions. Distinctly different size or type of connector shells or a system of unique keying can be employed. Unique keying includes different shell key polarizing or different mating contacts.

3.14.5.5 Interface Connector Provider

3.14.5.5.1 Harness Connectors

The Spacecraft Provider will provide the connectors that are attached to the Spacecraft harness.

3.14.5.5.2 Instrument Component Connectors

The Instrument Provider will supply the mating connectors on the instrument which mate to the Spacecraft harness.

3.14.5.5.3 Connector Types

The GIIS contains a list of allowable connector types in Table 3–7.

3.14.5.5.4 Connector Type Documentation

A connector list is maintained in the EICD for the specific type of connectors used by the instrument.

3.14.5.6 Flight Plugs

3.14.5.6.1 Flight Plug Installation

All special plugs should be installed as early as possible in the overall flow. If the installation of special plugs does not endanger equipment or any activities which are planned for the launch site, including transportation, they should be installed prior to shipment to the launch site. In the unusual case where circuits must remain disconnected within the instrument during transportation and launch site testing, the flight plugs must be installed prior to fairing installation or prior to transport to the launch tower, whichever comes first.

If, for technical or safety reasons, the flight plug must be mated as late as possible in the launch sequence, it will be mated via a fairing access door prior to Mobile Service Tower (MST) removal. Removal will occur some time prior to launch. Since a limited number of fairing access doors are permitted, and since these doors are determined early in the program development, it is imperative that a "flight plug installed via fairing access" requirement be identified early. Flight plugs mated via fairing access doors must be located within easy reach of the opening.

3.14.5.6.2 Flight Plug Responsibility

Flight plugs are electrical connectors which are purposely installed during specific Spacecraft tests, or late in the prelaunch flow for safety of equipment and/or personnel. Flight plugs are usually associated with ordnance arming or power circuits.

In general, the Spacecraft Provider prefers that no flight plugs be used on individual instruments. Exceptions will be handled on a case–by–case basis. Power and ordnance arming circuits will be handled at the Spacecraft level.

3.14.5.6.3 Flight Plug Documentation

Flight plugs will be located in the MICD drawing.

3.14.5.7 Connector Protective Covers

For all instrument connectors that do not mate to flight harnesses, such as test connectors, protective covers are required. These help ensure instrument and personnel safety by protecting against inadvertent shorts or bent pins caused by debris or other sources.

3.14.5.8 Test Connectors

3.14.5.8.1 Test Connector Accessibility

Instrument test connectors, if intended to be used during Spacecraft–level testing, whether planned or unplanned, are to be located in accessible areas of the instrument without having to remove any other equipment.

3.14.5.8.2 Test Connector Documentation

As with all other instrument connectors, the locations of the test connectors will be documented in the MICD drawing.

3.14.5.9 Breakout Boxes

3.14.5.9.1 Intra–Instrument Breakout Boxes

Test tees and breakout boxes for unique instrument connectors will be provided by the Instrument Provider.

3.14.5.9.2 Instrument–to–Spacecraft Interface Breakout Boxes

The Spacecraft Provider will have a supply of tees and breakout boxes for standard connector types. A list of tees and breakout boxes will be included in the I&T ICD. This list will delineate the specific responsibilities for each type of tee and breakout box.

3.14.5.10 Buffer Connectors and Connector Savers

3.14.5.10.1 Buffer Connector and Connector Saver Utilization

It is suggested that the instruments be delivered with the connector savers in place. Instrument Bench Acceptance Test (BAT) will be performed with the connector savers in place. The connector savers will be removed for instrument–to–Spacecraft integration testing.

3.14.5.10.2 Buffer Connector and Connector Saver Provider

Instruments will provide buffer connectors and connector savers for all instrument connectors.

3.14.5.11 Electrical Connector Constraints

Connectors that carry voltages above 60 volts are to be socket connectors for reasons of instrument and personnel safety. Based on this requirement and safety concerns, all power feeds from the Spacecraft to the instruments will be via female type connectors.

3.15 Access

3.15.1 Access Identification

All instrument access requirements will be documented in the I&T ICD. Specific access requirements include when the access is desired, the duration of access desired, required equipment, constraints and/or restraints, and any late access requirements.

3.15.2 General Access

The instruments will be designed to provide the capability to conduct alignment measurements and to components on the Spacecraft, without disassembly of components on the Spacecraft.

3.16 Handling Fixtures

Handling fixtures are utilized to place Instruments into and to remove them from their shipping containers and for installation of instruments onto and removal from the Spacecraft. Any instrument or Spacecraft component weighing more than 16 kg requires a lifting sling/fixture for its installation and removal. A description of these lifting devices will be contained in the I&T ICD.

3.17 Launch Site Equipment Installation and Removal

3.17.1 Non–Flight Equipment

Non–flight equipment includes fixtures and components that are utilized in transportation, handling, and launch processing of the Spacecraft and which must be removed prior to launch.

Covers required during instrument and Spacecraft ground operations will be fastened in a manner suitable to prevent loss during transportation and handling of the Spacecraft in any orientation.

3.17.2 Flight Equipment

All flight equipment to be installed at the launch site will be of a natural or neutral color.

3.17.3 Flight and Non–Flight Equipment Documentation

The MICD table and I&T ICD will document all equipment used at the Launch site. The information in the MICD will be used to develop a launch accountability kit which will contain any and all hardware that must be installed or removed during the launch preparation cycle.

4 THERMAL REQUIREMENTS

Thermal Control Subsystem

The EOS AM Thermal Control Subsystem (TCS) is required to maintain all Spacecraft components and instrument interfaces within allowable thermal limits throughout all operating and non–operating conditions. A functional diagram of the various thermal control methods is shown in Figure 4–1.

The thermal design philosophy maximizes the use of passive thermal control techniques for Spacecraft components and instruments, such as selective conductive couplings (e.g., low conductance standoffs for isolating equipment, and conductive gaskets for equipment requiring good conductive couplings). Selective thermal finishes are also employed for various components/structures (e.g., low emissivity tape or multilayer insulation (MLI) for radiative isolation; and high emissivity/low absorptivity surfaces for radiators).

For components and instruments with more stringent requirements, active thermal control methods are employed. Constant conductance heat pipe (CCHP) radiator panels are used to equalize temperature gradients in the equipment modules (EMs). A Spacecraft–provided Capillary Pumped Heat Transport System (CPHTS) provides thermal control of the instrument interfaces which cannot reject their heat locally from the instrument. Where required, autonomously controlled heaters ensure that minimum temperature requirements are maintained.

Thermal Design Parameters/Requirements

A combination of worst–case operational and non–operational conditions, beginning– and end–of–mission material properties, and margins are used to determine thermal control hardware needs, such as required radiator areas; number, size, and configuration of heat pipes; heater power requirements; etc.

Instrument Thermal Design Description

The Spacecraft TCS allows for two instrument thermal control strategies: local thermal control and Spacecraft–provided thermal control using a CPHTS. Local thermal control is normally accomplished passively by incorporating instrument radiators and MLI. Specific designs must be based on the field of view available for radiative heat rejection. Autonomously controlled heaters will be used where required.

The CPHTS, shown in Figure 4–2, is a fully redundant, two–phase fluid, capillary–pumped thermal system which uses anhydrous ammonia as its working fluid. A coldplate/ evaporator in contact with the instrument acquires waste heat and transfers it to liquid

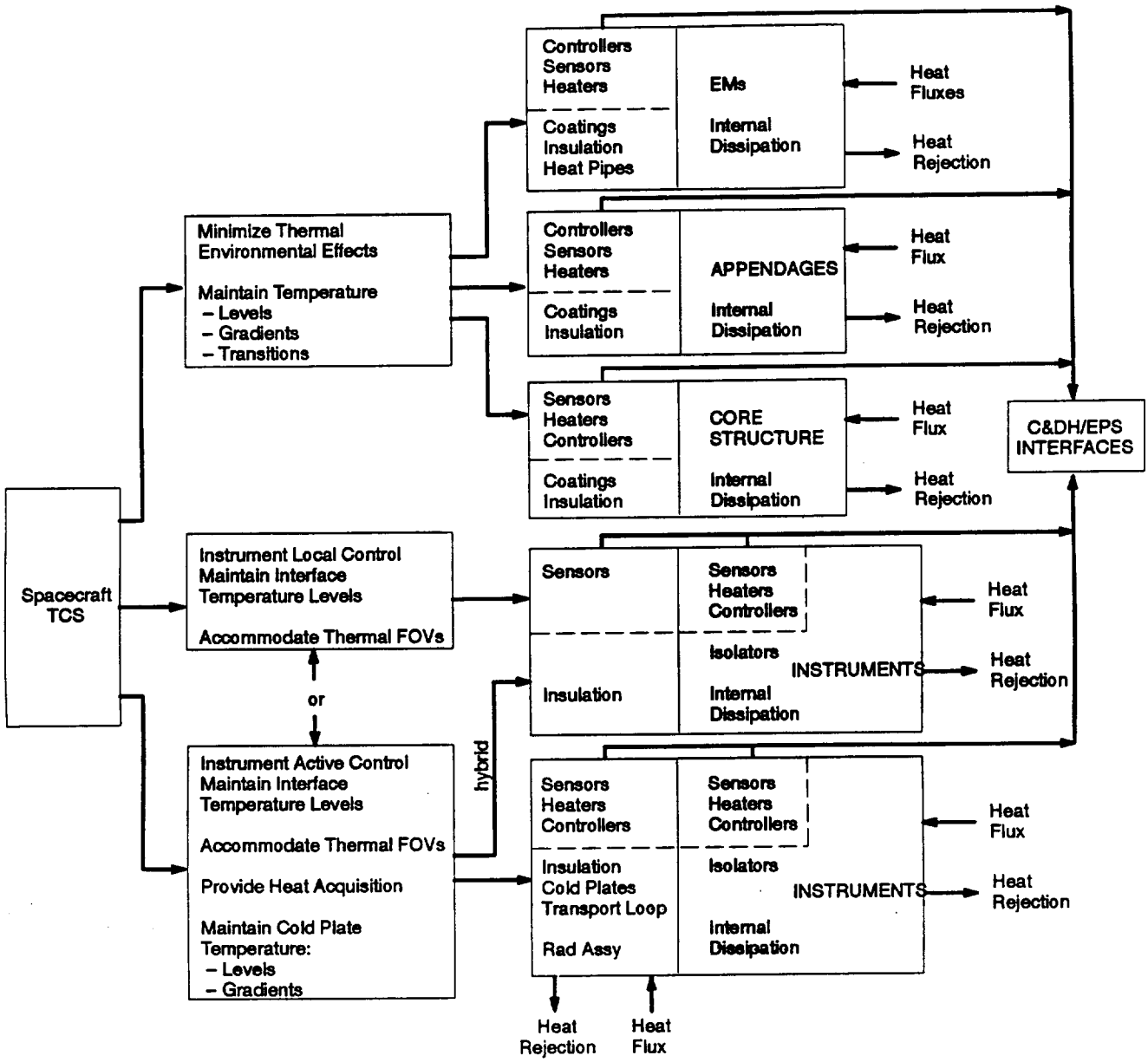

Figure 4–1. Thermal Control Block Diagram

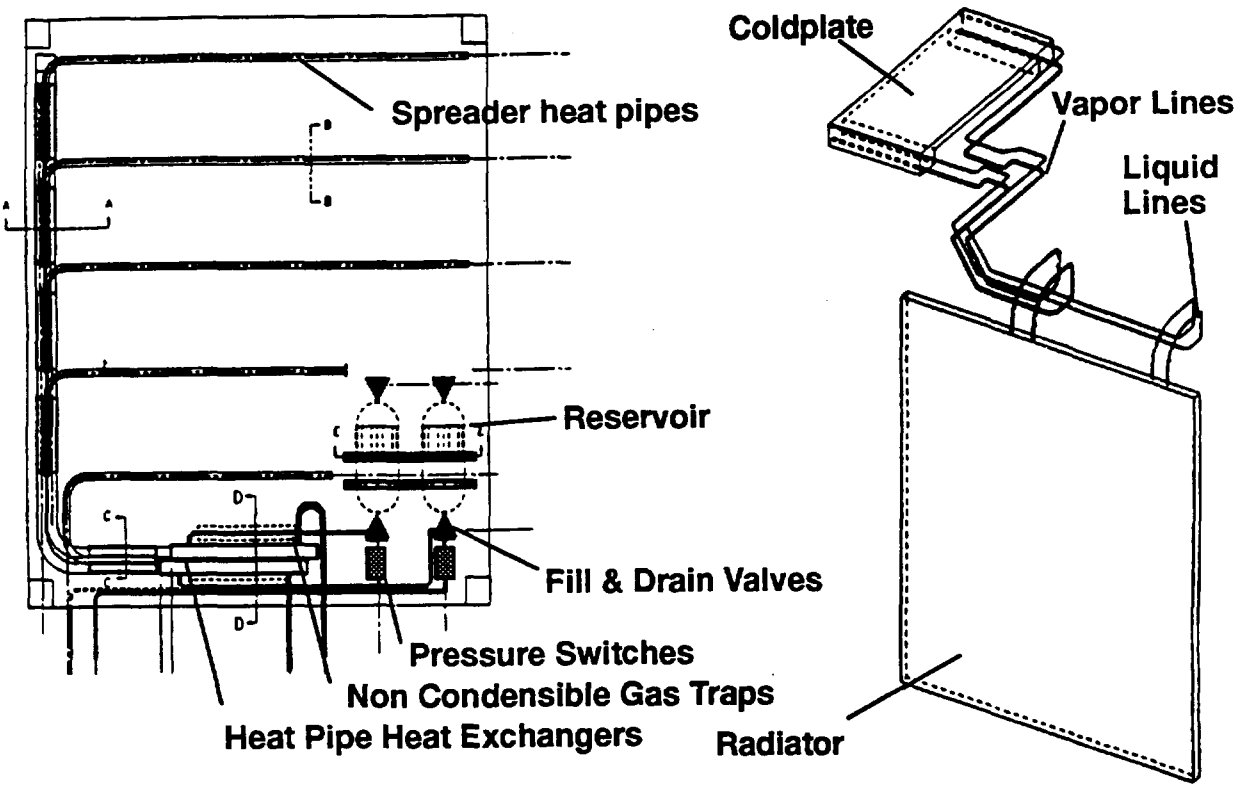

Figure 4–2. CPHTS Equipment Layout (Typical)

ammonia which is thereby vaporized. The vapor flows to a radiator assembly on the cold side of the Spacecraft. There the vapor is condensed within a heat exchanger which transfers heat to a constant conductance heat pipe network on the radiator for rejection to space. The condensed liquid exiting the heat exchanger is further sub–cooled via another coolant passage on the radiator prior to being returned to the coldplate. Loop temperature is maintained via temperature control of the reservoir, which is connected to the sub–cooled liquid return line.

Radiator assemblies are body–mounted on the cold (+Y) side of the Spacecraft, as shown in Figure 4–3, for a favorable view to cold space. The radiator sizing accounts for the effects of peak instrument load by assuming load smoothing due to instrument/CPHTS thermal mass effects.

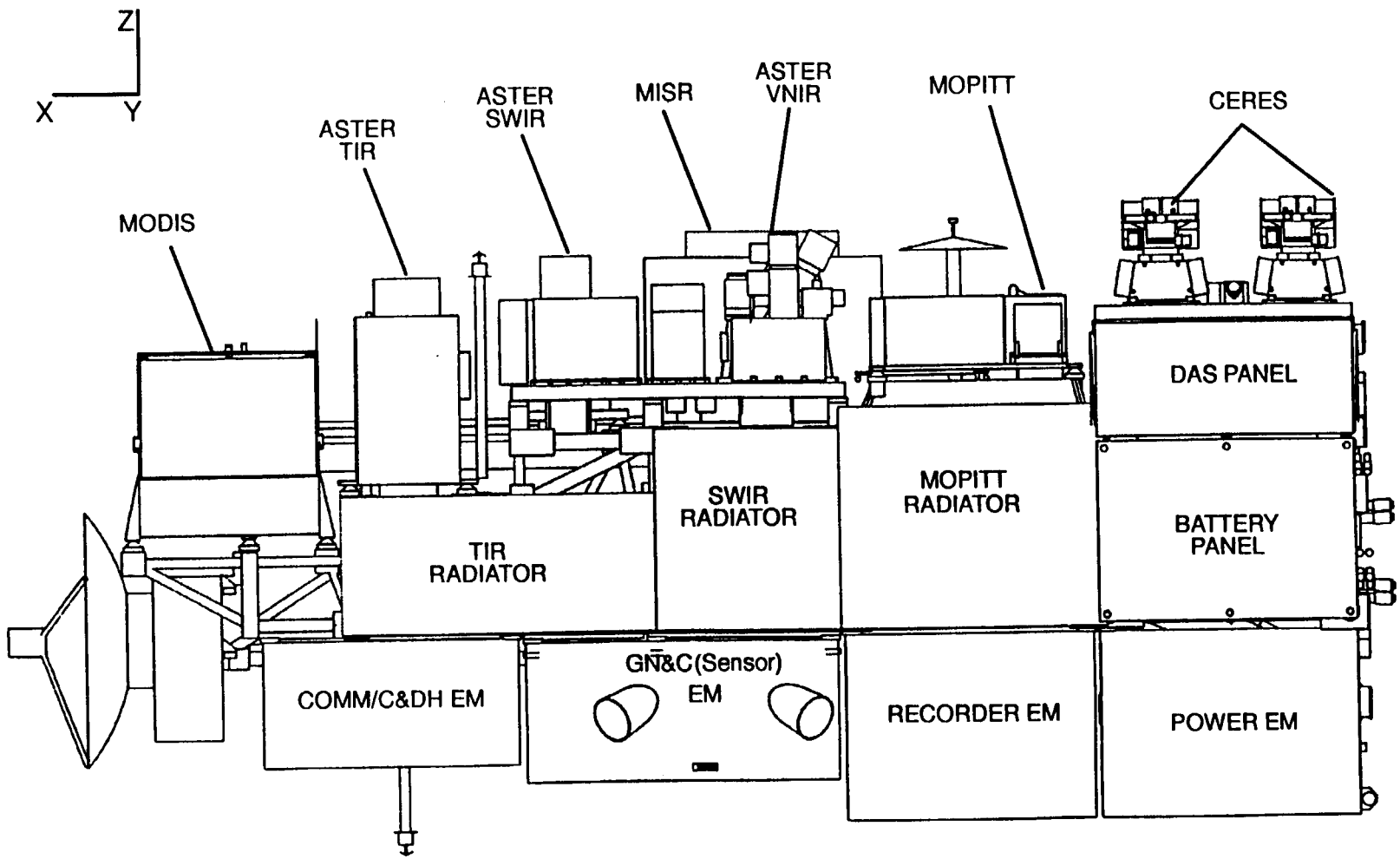

Figure 4–3. EOS AM +Y Radiator Assemblies

4.1 Thermal Interface Description

The location of the thermal interface is identical to the location of the mechanical interface. In the case of IMP–mounted instrument components, the thermal interface is at the mounting surface of the component. This thermal interface includes both conduction of mating surfaces, and radiation coupling of the IMP–facing surfaces not in contact with the IMP, to the Spacecraft.

In the case of kinematically–mounted instruments, the thermal interface is at the instrument side of the kinematic mount and the thermal blanket at the underside of the instrument. This thermal interface includes conduction through the mount, which is 0.05 ±0.02 watts/°C per mount, and radiation coupling of the Spacecraft facing surface (i.e., the side of the instrument facing Spacecraft structure) to the Spacecraft.

4.2 Thermal Design

4.2.1 Instrument Thermal Design Provider

The Instrument Provider is responsible for the design and implementation of the instrument thermal control system. The thermal design of the instrument must include sufficient radiator area(s) to avoid the overheating of its components, and to cool sensitive detectors. Either conductive paths through the instrument structure, or heat pipes should be employed to ensure adequate heat transfer to the radiator area(s). Instruments that are cooled via a CPHTS should be designed so that heat transfer to the coldplate interface is maintained within the coldplate design limits. The Spacecraft Provider will provide information which will be used in the design of the instrument thermal control system. This information will be provided in the instrument Thermal ICD (TICD) and documentation resulting from thermal model runs of the Spacecraft.

4.2.2 Instrument Thermal Design

The instrument must be designed to withstand the external thermal environment and to maintain its internal temperature range within limits during normal operation. It must be able to operate after a self–induced orbital anomaly and it must also be designed to survive being powered off during Spacecraft survival operations.

The instrument design should include internal heaters and/or the use of MLI if critical components are particularly sensitive to cold temperatures. Power for instrument heating will be restricted when the Spacecraft enters survival mode. The instrument should be designed to maintain its minimum turn–on temperature at all times with no more than the power allocated in the UIID for survival mode power.

Instrument thermal design must include thermal isolation from the Spacecraft. This may be in the form of gaskets, isolators, kinematic mounts, blankets etc. All of these are not necessarily instrument–provided; some items, such as kinematic mounts, are Spacecraft–provided. The isolation is necessary to avoid excessive thermal loads that would degrade the Spacecraft's alignment precision.

4.3 Heat Transfer

4.3.1 Heat Transfer with the Spacecraft

4.3.1.1 Average Heat Flux

The specified heat flux at the Spacecraft mechanical interface refers to the average heat transfer flux, by conduction and radiation, over the projected area (shadow) of the instrument at the Spacecraft–to–instrument interface. Heat transfer across the interface is limited in both directions to the specified overall heat transfer density.

4.3.1.2 Heat Transfer Distribution

The heat transfer between the instrument and IMP can affect the thermal distortion of the IMP and hence, the pointing integrity of the IMP. The heat transfer distribution of instruments with stringent pointing requirements will be evaluated by the Spacecraft Provider. The purpose of this evaluation is to identify potential problem areas that may exist due to hot/cold spots on the instrument interface. If the pointing requirements are not attainable, further isolation between the instrument and the IMP must be incorporated in the instrument design through the use of MLI or isolators at the mounting interface.

4.3.2 Heat Transfer with the Coldplate

The specified heat flux at the coldplate mechanical interface refers to the average power density of thermal energy being conducted into the coldplate. The flux requirement is imposed in order to meet the thermal gradient requirements across the face of the coldplate as well as to provide for minimum temperature gradients across the instrument/coldplate interface.

If the specified heat transfer flux is exceeded at the coldplate mechanical interface, the maximum interface temperature gradient and the coldplate interface temperature will exceed the specification. Thus, instruments which are not highly sensitive to temperature gradients greater than 5°C across the coldplate mechanical surface, or which do not require a maximum coldplate mechanical interface temperature of 25°C, may exceed the maximum allowable heat flux, provided that all impacts to the instrument, CPHTS, and instrument–to–Spacecraft interface are closely evaluated.

4.3.3 Heat Transfer Distribution Documentation

For instruments that have local hot spots on the coldplate interface that exceed 1 W/sq in, the maximum specified interface temperature gradient, as well as the specified coldplate interface temperature of 25°C will be exceeded. The Instrument Provider is expected to provide sufficient information to the Spacecraft Provider to perform an evaluation. This information should be available for inclusion in the TICD with the understanding that the Spacecraft Provider will evaluate the non–conformance and, if acceptable, will agree to its inclusion in the UIID.

In addition, the thermal math model which the Instrument Provider is required to submit, must have the required detail to define the "hot spot" non–conformance.

4.3.4 Environmental Heat Transfer

The instrument must be designed to withstand all orbital conditions which it will be subjected to during the EOS–AM mission. A discussion of the thermal environmental fluxes specific to this mission can be found in Section 10.

4.3.5 Deleted

4.4 Temperature

4.4.1 Spacecraft Temperature Range

The IMP design will accommodate the expected on–orbit temperature ranges. No active thermal control of the IMP, such as heaters, is planned to be used to maintain the IMP interface temperature.

For kinematically–mounted instruments, it is intended that the normal operations Spacecraft temperature range of 0° to 30°C applies to the bottom of the kinematic mounts (i.e., kinematic mount–to–Spacecraft structure interface). The control of heat flow between the instrument and Spacecraft structure is accomplished by the low thermal conductance of the kinematic mount body.

4.4.2 Coldplate Temperature Requirements

4.4.2.1 Coldplate Temperature Range

Control of the coldplate temperature is achieved by actively controlling the CPHTS reservoir temperature. By maintaining a constant reservoir temperature, the coldplate operating temperature is also held constant. With a constant reservoir temperature, automatic adjustments to the liquid volume within the CPHTS heat exchanger are made as

the heat load applied to the coldplate varies. As the coldplate heat load decreases, the reservoir will expel liquid into the heat exchanger in order to decrease heat rejection to the CPHTS radiator. When the coldplate heat load increases, liquid from the heat exchanger flows back into the reservoir so that heat rejection to the radiator can increase to match the coldplate load.

The temperature of the coldplate is not constant over its surface, due to the spacing of evaporator pumps embedded in the coldplate. Under normal operations, the minimum coldplate surface temperatures will be directly above the active evaporator pumps. Surface temperatures will be higher as the distance from the active pump increases. If the maximum heat flux of 1W/in^2 is exceeded, the coldplate surface temperature may exceed 25°C.

During survival modes, the CPHTS is not active and the coldplate temperature floats with the instrument temperature. Coldplate survival heaters are activated by the Spacecraft to maintain the coldplate minimum survival temperature at or above –25°C. These heaters are provided to protect the coldplate and are not designed to heat the instrument.

4.4.2.2 Coldplate Interface Filler Temperature Gradient

The gradient across the coldplate filler material will be less than 2.0°C. This is specified at the maximum 264 W rating of the coldplate and also is bounded by the specified maximum heat transfer flux of 1W/in^2.

4.4.3 Instrument Temperature Range

Temperature limits should be established by the Instrument Provider for every instrument component or component item which will be damaged by temperature extremes. Temperature extremes may occur during testing, storage, and on orbit, whether the instrument is turned on or off. Each of the affected components should have corresponding instrument telemetry which indicates the temperature of the components. The identification of the telemetry along with appropriate limits will be documented in the TICD. In addition, the instrument Command and Data Handling (C&DH) ICD will list all instrument telemetry, limits and corrective action plans for each telemetry point. The action plans will be in the form of command sequences which will correct the out of limits condition.

4.4.4 Test Coldplate Temperatures During Instrument Qualification Testing

The test coldplate system is used during instrument and Spacecraft level ground testing for the thermal control of those instruments which require the CPHTS for flight. The system consists of a data acquisition system (DACS), recirculating chiller, auxiliary equipment, and a test coldplate (TCP).

Temperature control of the test coldplate is achieved by fluid circulation within the system. The working fluid, Fluorinert FC–77, is circulated by a positive displacement gear pump in the chiller to the TCP. Instrument waste heat is collected via the TCP and transferred to the working fluid which returns to the chiller reservoir. In the chiller reservoir, the working fluid is cooled via the refrigeration system within the chiller before returning to the TCP. The DACS provides data handling, as well as chiller, heater, and temperature control.

The mechanical and thermal characteristics are similar to the flight CPHTS coldplate, and the interface to the instrument will be identical (i.e., 24 bolts, Cho–Therm 1679 gasket).

Since the test coldplate is intended for use during instrument stand alone testing, the test coldplate system will have the capability to maintain the test coldplate interface temperature between +10° and +35°C. The test coldplate is designed to allow testing of the instruments at the qualification temperature extremes.

4.4.5 Test Coldplate Temperatures During Instrument Acceptance Testing

The test coldplate system will maintain the test coldplate interface temperature between +15° and +30°C to allow testing of the instruments at the acceptance temperature extremes.

4.5 Temperature Monitoring

4.5.1 Mechanical Interface Temperature Monitoring

Spacecraft–provided sensors will monitor the mechanical interface for any out–of–limit temperatures. This monitoring will be of sufficient detail to determine that the Spacecraft side of the interface is at allowable temperature limits. In the case of IMP–mounted instruments, temperature sensors will be located on the IMP in the vicinity of the instrument. In the case of kinematically–mounted instruments, temperature sensors will be located in the vicinity of the bottom portion of the kinematic mount assembly, (i.e., on the structure fitting that is supporting the kinematic mount).

4.5.2 Instrument Temperature Monitoring

The Instrument Provider supplies the temperature sensors required to monitor an instrument's critical items, for which health and safety temperature limits have been established, in addition to establishing the corrective measures required to safeguard the component should the temperature limits be approached or exceeded. The Spacecraft must be able to monitor the health and safety of the instruments without the need for the instrument to be powered. Therefore, it is required that passive telemetry be used for critical temperature information.

4.5.3 Temperature Sensor Location

Temperature sensors should be placed on or near instrument components or component items with critical health and safety temperature limits. The sensors can be internal or external to the critical component or, where applicable, at the instrument side of the mechanical interface.

The location of the instrument temperature sensors will be documented in the TICD. The TICD will also document the telemetry acronyms and temperature limits associated with the temperature sensor measurements, as well as the modes in which they will be executed.

4.6 Thermal Control Hardware

4.6.1 Coldplate

4.6.1.1 Coldplate Capacity

The coldplate is designed to a maximum capacity of 1 W/sq. in. across the active area (12" by 22") for a total capacity of 264 W. The minimum operational capacity to which the coldplate has been designed is 0.1 W/sq. in. Therefore, the minimum instrument load on a coldplate must be at least 10% of the total coldplate capacity.

4.6.1.2 Coldplate Configuration

The coldplate configuration overall envelope is shown in Figure 3–8 of the GIIS. This figure shows the overall size and active area of the coldplate. Only a certain portion of the total area of the coldplate is active; the remaining area consists of manifolds connecting the pumps.

4.6.1.3 Coldplate Mounting Orientation

The flight coldplates will be oriented such that their interface planes are parallel to the X–Y plane of the Spacecraft. For coldplate performance testing, the plane of the coldplate interface is required to be parallel to the ground due to the limited pumping ability of the coldplate pumps within a 1–G environment. The coldplates are specified to operate with an allowance for gravity effects on slightly non–parallel coldplates that could be due to imperfections in the coldplate installation on the Spacecraft.

4.6.1.4 Coldplate Mounting Elevation

The height of the coldplate mechanical interface from the mounting interface is driven by the limited pumping ability of the lines connecting the coldplate to the rest of the CPHTS due to gravity effects. The required height was chosen based on available test data substantiating pump operation for that height.

4.6.1.5 Coldplate Mechanical Interface Filler Conductivity

The interface filler material currently defined for the coldplates is Cho–Therm 1679. This material is supplied by the Spacecraft Provider for both the test coldplate and the flight coldplate. The Spacecraft Provider will supply adequate support to the instrument teams to allow application and installation of the filler material to the test coldplate/instrument interface.

4.6.1.6 Test Coldplate Requirements

For those instruments using the CPHTS, a test coldplate system (TCPS) will be supplied by the Spacecraft Provider to enable testing of the instrument at the Instrument Provider's facility. The test coldplate is functionally identical to the flight coldplate. The mounting interface will be identical to the flight coldplate interface, as will heat rejection performance. The bolt pattern used to attach the coldplate to the instrument will be identical to the flight coldplate pattern.

The TCPS will include attachment bolts and the ground support equipment required for controlling the temperature of the coldplate during bench and Spacecraft level testing of the instruments. The test coldplate system will be vacuum compatible since the test coldplate will be used by the Instrument Provider for both ambient and vacuum testing. In addition, the test coldplate will be designed to simulate the mass properties of the flight coldplate for its use in instrument vibration tests. A recirculating chiller and data acquisition and control system will be supplied by the Spacecraft Provider to maintain coldplate interface temperatures nominally at 20°C +5/–0°C by circulating Fluorinert FC–77 coolant fluid through the test coldplate.

The instrument will be delivered to the Spacecraft Provider's facility with the test coldplate installed to allow standalone testing at the Spacecraft Provider facilities. The delivery schedule for the TCPS is to be negotiated and agreed to by the Instrument and Spacecraft Providers. The Instrument Provider is responsible for integrating the TCPS with the instruments. As part of this effort, the Spacecraft Provider will supply support for the initial installation and startup of the test coldplate system.

4.6.2 Heaters

4.6.2.1 Survival Heaters

Survival heaters will maintain the instrument within non–operating temperature limits during mission modes which require the instrument to be turned off. These heaters will supply sufficient power to bring instrument temperatures up to minimum turn–on levels. Instrument–provided thermal control devices, such as thermostats, will control the survival heaters.

During Spacecraft survival mode and other non–operating modes, power will be provided to the instrument heaters and heater controllers only as is sufficient to maintain the instrument temperature above survival limits. The survival power required by the instrument to control and maintain temperature–critical components within their survival temperature limits is documented in the TICD and Electrical ICD (EICD).

The Spacecraft Provider will provide survival heaters for instrument accommodation equipment (e.g., Bus Data Units (BDU), Heater Control Electronics (HCE) and Fuse Distribution Boards (FDB)) and for CPHTS coldplates.

4.6.2.2 Survival Heater Control

Survival heaters are intended to be locally controlled by thermostats, either electronic or bimetallic. The Instrument Provider is responsible for the design and implementation of their instrument's survival heater system. The survival heater system should be operable with instrument power off. In no case should an instrument require that it be powered on in order to command its survival heater(s).

4.6.3 Thermal Control Hardware

4.6.3.1 Thermal Control Hardware Responsibility

The responsibility for various instrument thermal control components is listed in Table 4–1 of the GIIS. The flight coldplate will be installed at the Spacecraft Provider's facility using their procedures and materials. The installation will take place after the instrument Bench Acceptance Test (BAT) and any calibration testing required by the Instrument Provider. Current plans are to install the flight coldplate onto the instrument after mechanical integration and alignment of the instrument on the Spacecraft. Any changes to the assignments of thermal control hardware responsibility should be documented in the UIID.

4.6.3.2 Thermal Control Hardware Documentation

The TICD and MICD Drawing will be used to document all applicable details of instrument and Spacecraft thermal control hardware. The MICD will be used to detail the envelope of the instrument thermal blankets and any Spacecraft blankets which directly attach to any part of instrument hardware. The MICD will also be used to detail any blanket grounding configuration that is used by the instrument.

The TICD will contain details of the thermal and functional properties of thermal control hardware. Details such as blanket outer surface properties, through emissivity, etc. will be documented in the TICD. Thermostat set points, temperature telemetry limits, heater location, heater power, etc. will also be documented in the TICD.

Details of instrument thermal blanket installation and closeout will be contained, in full or by reference to instrument procedures, in the Integration and Test (I&T) ICD.

4.7 Thermal Models

Thermal math models are used to verify the viability of the instrument and Spacecraft thermal system designs. GSFC will verify that the models meet previously agreed to standards and also verify that the models do not generate any error messages during verification runs. These verified models are then provided to the Spacecraft Provider for inclusion into the Spacecraft integrated thermal model. Results from this model will be provided by the Spacecraft Provider to GSFC. GSFC will provide these results to the Instrument Providers.

4.7.1 Surface Model

Instrument surface models received from the Instrument Providers will be used to determine environmental loads and radiative couplings between instrument/Spacecraft surfaces. These models are supplied by the Instrument Provider via GSFC. GSFC will verify that the models meet the standards specified in Appendix E of the GIIS, and also verify that the models do not generate any error messages during verification runs.

4.7.2 Reduced Node Thermal Math Model

Reduced node thermal math models are simplified versions of the instrument thermal models. They are used by the Spacecraft Provider in Spacecraft level thermal analyses. These models are supplied by the Instrument Provider via GSFC. GSFC will verify that the models meet the standards specified in Appendix E of the GIIS, and also verify that the models do not generate any error messages during verification runs.

The node numbering range of these models for each instrument is documented in the TICD.

4.7.3 Detailed Thermal Math Model

A detailed thermal math model of the assembly will also be developed by the Instrument Provider with the objective of demonstrating that all internal assembly thermal requirements are met for all expected mission modes and testing. Although the model itself is not a deliverable item, a nodal description and the results of the analysis using the model will be delivered to the Spacecraft Provider via GSFC as a test of the adequacy of the reduced node thermal model and a means of making flight assembly predictions. The Instrument Provider shall use the detailed thermal model to predict and analyze the results of the assembly level thermal balance test, resulting in a validation of the math model.

5 ELECTRICAL REQUIREMENTS

Electrical Power Subsystem

The Electrical Power Subsystem (EPS) provides all Spacecraft instruments and subsystem housekeeping equipment with power during all mission phases. The major functional components of the EPS are shown in Figure 5–1.

The EPS provides energy generation, energy storage, and power conversion, regulation, and distribution, utilizing a fully–regulated direct–energy–transfer (DET) configuration at +120 Vdc. This configuration transfers power directly from the source to the loads with a minimum of losses and without any intermediate power conversion, resulting in a system which is both light–weight and efficient, while providing ±4% regulation at the load interface. The EPS is required to provide 5.0 kW end–of–life (EOL) average, of which 2.53 kW is allocated to operate all electrical loads, and 2.47 kW is available to recharge the batteries. It is designed to provide single–fault tolerance and a high level of redundancy.

Power is generated by a single–wing photovoltaic solar–cell array which rotates via the Solar Array Drive (SAD) in order to maximize solar exposure. Power for Spacecraft operation during eclipse is stored in two rechargeable 50 ampere–hour nickel–hydrogen batteries, and excess solar cell array power is shunted via a Sequential Shunt Unit (SSU). During the eclipse phase, (32.7 to 34.8 minutes per orbit), the batteries provide power to operate the Spacecraft loads via the Battery Power Conditioners (BPCs), which combine discharge regulator and charge regulator functions in the same converter. During the sunlit portion of the orbit, (66.2 to 64.1 minutes per orbit), the BPCs charge the batteries, transforming energy from the +120 volt bus voltage level to the current required by the batteries.

5.1 Electrical Interface Requirements

5.1.1 Electrical Interfaces

The instrument power interface consists of two feeds, A and B, for each of the redundant power buses. The grounding interface is at a single point. The command and data handling interface consists of an A and B side for each of the following: relay drive commands, bi–level telemetry, passive analog telemetry, active analog telemetry, time mark and frequency bus, command and telemetry bus, low–rate science bus, and high– rate science bus.

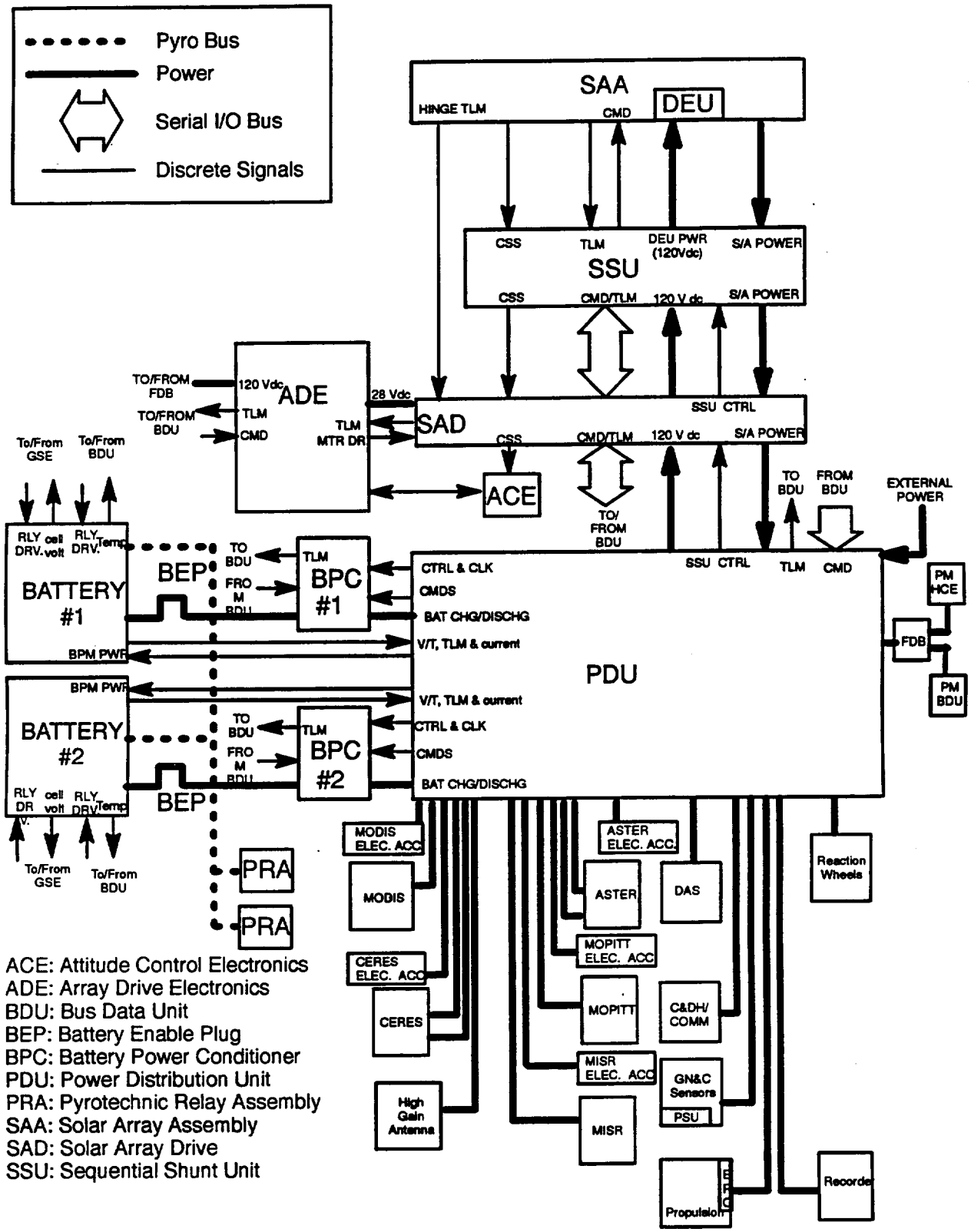

Figure 5–1. Electrical Power Subsystem (EPS) Block Diagram

5.1.2 Electrical Interface Definitions

5.1.2.1 Electrical Interface Location

Since each instrument utilizes accommodation equipment, the electrical interface is located at the physical terminus of the Spacecraft–supplied equipment. This equipment includes not only the Bus Data Unit (BDU), but the harnessing from this equipment to the instrument–provided components. Hence the electrical interface location is at the mating surfaces between the Spacecraft–supplied harness connector and the connector supplied with the instrument.

5.1.2.2 Operational Power

Operational power is that power allocated to the instrument for normal operation. Normal operation includes all operational modes of the instrument; science, calibration, standby, etc. Operational power is specified in terms of "peak" and "average" power.

5.1.2.2.1 Peak Power

Peak power is the maximum instantaneous power required by the instrument. Often, an instrument will only need peak power for brief periods of time. If these periods last less than 20 milliseconds, then their effects are considered negligible on the total power load of the Spacecraft.

5.1.2.2.2 Average Power

Average power is the average power consumed in normal operation, specified as both one–orbit average and two–orbit average. If one–orbit average power is not equal to two–orbit average power, then one–orbit average power cannot be applied to two consecutive orbits in analyses.

5.1.2.3 Survival–Mode Power

During the survival mode, all non–critical Spacecraft loads will be off. The instrument is provided only enough power through the normal instrument power feeds for survival heater operation during survival mode.

5.1.2.4 Safe–Mode Power

Safe–Mode consists of nine submodes, referred to as Levels (reference Appendix D for a definition of each level). Only in Safe–Mode Level 8 will all normal Spacecraft loads be on, including the instruments, and science be performed. In all other submodes, instruments are off and only survival heaters and heater controllers are on.

5.1.2.5 Launch Phase Power

Currently, instrument requirements for power during the launch phase are being evaluated.

5.2 Power

The power distribution system is a star–radial system, as shown in Figure 5–2, which utilizes a double–insulated single–bus bus configuration and redundant hardware elements. The power distribution bus is voltage–controlled by the SSU and the BPC via a control signal from the Power Distribution Unit (PDU); all are contained in the Power Equipment Module (EM). The PDU provides the central regulation point for the power system and power distribution bus for the Spacecraft loads. Power is distributed from fuse distribution boxes (FDBs) in the Power EM via the Spacecraft harnesses to housekeeping EMs and the instruments. The PDU EM contains relays in series with each instrument power feed which are intended to be used only during Spacecraft integration for safety.

5.2.1 Instrument Power Allocations

The Spacecraft harnesses are required to support instrument power levels as allocated in the UIID.

5.2.1.1 Operational Power Allocation

The operational power levels in the UIID are used to design the electrical accommodations, such as harnesses, connectors and fuses, to support the instrument power requirements and to ensure maintenance of the orbital EPS energy balance.

5.2.1.2 Survival Power Allocation

The survival–mode power levels in the UIID will be the maximum power available for survival heaters or other equipment necessary for instrument survival during power–critical operations.

5.2.1.3 Launch Phase Power Allocation

Currently, no instruments have been allocated power during the launch phase.

5.2.1.4 Power Interface Allocations

All instruments have one set of two power interfaces, except for ASTER, which has two sets due to high power requirements. Each set has one feed to power bus A and one feed to power bus B.

5.2.1.5 Instrument Power–Level Documentation

The EICD will include power consumption profiles by mode, including significant mode switching transients.

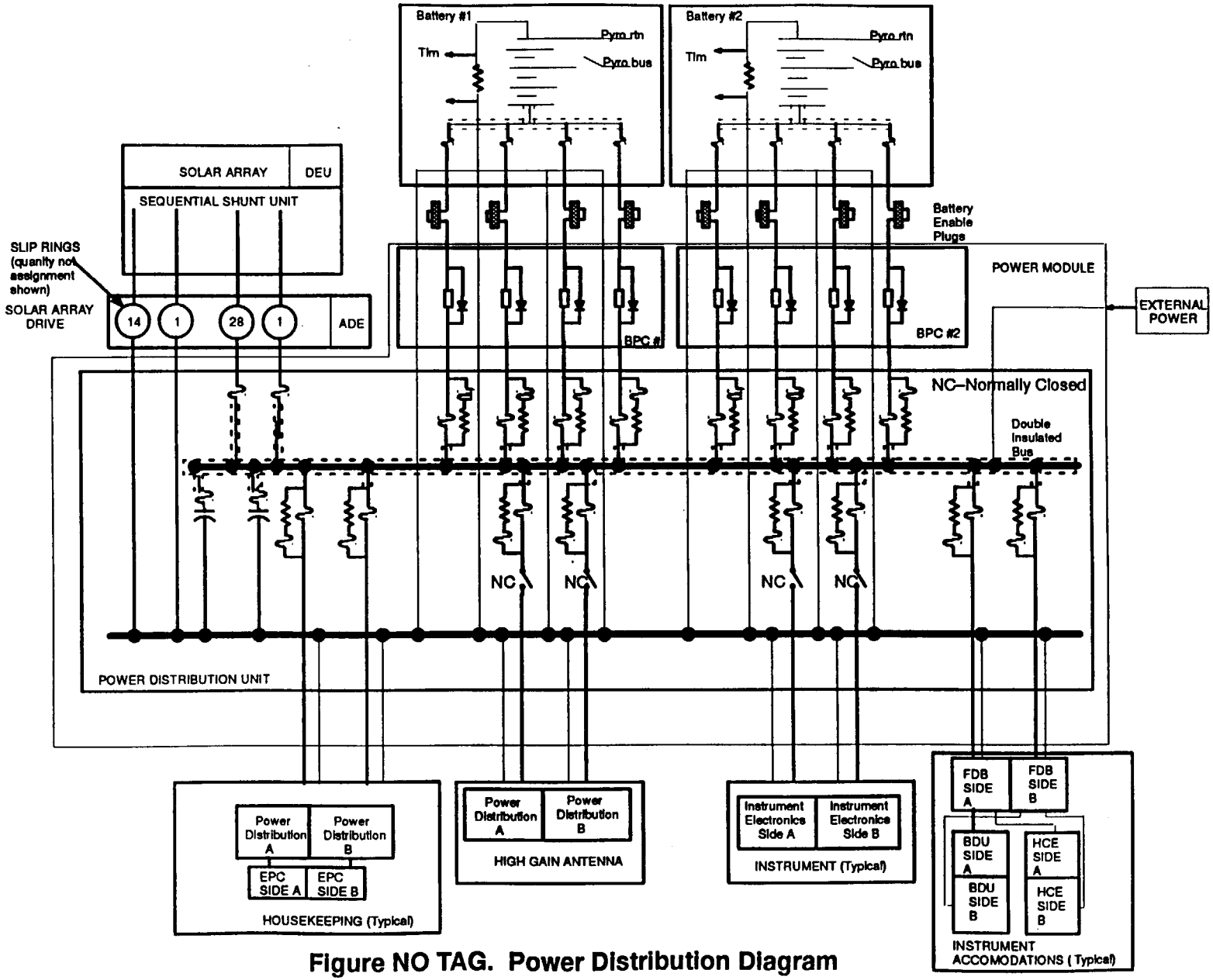

Figure NO TAG. Power Distribution Diagram

5.2.2 Power Characteristics

5.2.2.1 Voltage

The voltage at the power distribution bus in the Power EM PDU is nominally 120 Vdc +4/–2%. With an additional 2% allocated for harness loss, the voltage tolerance at the interface is therefore ±4%.

5.2.2.1.1 Voltage Transients

PN20005869, Electromagnetic Compatibility Control Plan for the EOS–AM Spacecraft specifies CS06 transients which may occur during science mode (perform), non–science modes (operate) and absolute maximum due to fault conditions (survive). The power input filter for a switch mode regulator typically has sufficient insertion loss to meet the perform and operate limits if the CE01/CE03 and CS01/CS02 requirements are met. The CE01/CE03 and CS01/CS02 requirements are typically the "design drivers" for insertion loss needs of the input filter. Selection of components in the filter (e.g., transistors, diodes, and capacitors) needs to address the amplitude of the CS06 survive transient. Particular attention to the feedback loop between the primary and secondary sides of the power converter needs to address the application of CS06 common mode components to the converter circuits.

5.2.2.1.2 Abnormal Steady–State Voltage Limits

The abnormal voltage level range $0 \leq V \leq 120$ Vdc could exist during Spacecraft integration and test, when the power is brought up gradually from 0 volts. The abnormal voltage level range $120 \leq V \leq 132$ could be caused by an on–orbit power system anomaly due to bus voltage deregulation.

5.2.2.2 Power Source Impedance

The power source impedance at the power distribution bus in the Power EM PDU is less than 0.1 ohm at frequencies below 100 kHz. However, due to the harness (specified for the longest Spacecraft power run), fuses and connectors between the power distribution bus and the interface, the impedance increases to the levels specified, which are seen differentially from power line positive to power line return. The requirement is expressed in terms of resistive and inductive asymptotes and includes mutual line–to–line coupling.

5.2.2.3 Current

5.2.2.3.1 Instrument Current Transients

The turn–on inrush current peaks and time duration are specified to be within the I^2t energy limitations of the line fuses. The turn–on, turn–off and normal operation current transient requirements are derived from the capabilities of the electrical accommodations, including

fuses, connectors, and harnesses, to source the current rate of change without causing the distribution bus voltage to deviate beyond specified limits. The overcurrent protection device type and size will be described in the EICD schematic.

5.2.2.3.2 Instrument Conducted Common Mode Current

The common mode conducted current emissions are radiated from chassis/structure and shield returns as emissions if not restricted to certain limits. These limits are described in PN20005869, Electromagnetic Compatibility Control Plan for the EOS–AM Spacecraft.

5.2.2.3.3 Overcurrent Protection

The Spacecraft electrical accommodations and the EPS are protected by overcurrent devices in the EPS and in the FDBs located on the nadir deck near the instruments. Other overcurrent devices may be utilized by the instrument as necessary for the protection and isolation of various instrument components.

5.2.2.3.3.1 Overcurrent Protection Device Size

Spacecraft overcurrent devices are derated 50% from the expected peak value of the load (e.g., 1 amp peak load requires a 2 amp fuse).

5.2.2.3.3.2 Overcurrent Protection Device Size Documentation

The overcurrent protection devices supplied by both the Spacecraft and Instrument Providers will be described in the EICD schematic.

5.2.2.4 Instrument Power Input Impedance

The requirement for input impedance insures EPS stability while operating within the various regulation modes. The specification per individual user, as a function of power level, guarantees that the combined input impedance exceeds the bus impedance by a specified margin. The input impedance is allowed to be lower between 2 kHz and 10 kHz than between DC and 2 kHz to account for a possible series resonance impedance dip of the user input filter. It is also required that the instrument provide a symmetrical or balanced common–mode and differential–mode input filter to minimize common–mode currents.

5.2.2.4.1 Instrument Common Mode Impedance

The instrument common mode impedance level specified in the GIIS describes a common mode input filter equivalent maximum capacitance value of 0.01 μF. This requirement ensures a high common mode impedance which will restrict the flow of power

subsystem–generated noise into the instrument chassis. The intent is to preclude the use of capacitors as the input element. The use of a common mode choke as the input element would then allow the use of sizable feedthrough capacitors of up to one–half the value specified in Section 5.3.1.2.2.

5.2.2.4.2 Instrument Differential Mode Impedance

The differential mode impedance is at the instrument interface and includes the harness impedance in series with the EPS–required minimum impedance. The allocation of impedance, as a function power, assumes that the large power users will have larger input filter components than will users of less power. The specification precludes the use of large capacitors across the input lines and assumes the use of large series inductors in each power feed and return line.

5.2.3 Power Control

5.2.3.1 Power Connections

The power connections are shown in Figure 5–2.

5.2.3.2 Power Application

Survival power will be continuously supplied to the instruments in all modes of operation, including launch. Operational power will be continuously supplied to the instruments following launch mode except in the event of a fault.

5.2.3.3 Power Fault Tolerance

The EPS is protected by overcurrent devices on the Spacecraft side of the interface. The instrument may use various fault protection devices, such as fuses and double–insulation techniques, at component levels to prevent single–point failures. Current limit devices are not recommended but, if used, must be set to limit such that the total power does not exceed the allocation.

5.2.3.4 Instrument Equipment Separation

Separation and independent operation of survival and operational equipment should preclude the propagation of a failure due to collocation.

5.2.3.5 Instrument Power Control

The separation of power control extends through to the BDU and power sources for the control devices, all of which have an A (primary) and B (redundant) side.

5.3 Grounds, Returns, and References

PN20005869, Electromagnetic Compatibility Control Plan for the EOS–AM Spacecraft, defines the overall approach, planning, and design criteria to ensure EMC compatibility of the EOS–AM Spacecraft. The EMC Control Plan provides the EMC requirements, management organization, and design control procedures for the Instrument Provider and Spacecraft Provider as they relate to EMC control. In particular, it specifies the electromagnetic interference/electromagnetic compatibility (EMI/EMC) levels and the design considerations for bonding, grounding, and shielding to meet those levels.

The Spacecraft utilizes a hybrid grounding system composed of a single–point ground for primary power and a multipoint signal reference plane (SRP) for secondary power and interface signal referencing. The prime power system and the SRP are connected at a single point, which is called the Prime Power Reference (PPR). The PPR is at the PDU. Instruments each have local single–point fault grounds on the interface connector panels which are mechanically bonded to the SRP and also connected to the PPR via safety ground wires. The fault ground wires are to be routed to the users of prime power to provide fault control and personal safety. Within each instrument or Spacecraft component the secondary power return lead is to be referenced to chassis to provide a reference potential. This is required for interface circuits but is a standard design practice for high–speed digital and RF circuits. Return leads are required for all interfaces, signal and power, to preclude crosstalk and chassis ground currents. The instruments are isolated from the SRP by the kinematic mounts and are then bonded at a single location, the interface connector panel or instrument ground interconnection. It is at this point that all cable shields, fault grounds, and chassis grounds are electrically bonded to the SRP. The ground system configuration for cable shields, secondary power, and signals is a multipoint ground system. The ground plane is the SRP, and an instrument and its specific support electronics are configured together on a ground island, and bonded to the SRP at a single point. Details of the Spacecraft grounding concepts are shown in PN20005869, Electromagnetic Compatibility Control Plan for the EOS–AM Spacecraft, and are further described in 20005400, Electromagnetic Compatibility Design Handbook for the EOS–AM Spacecraft.

5.3.1 Power Leads and Returns

Primary power bus returns from the instrument are tied to the power bus return in the EPS and from there, connected to the PPR for reference only. Primary power return current does not flow through the PPR unless a fault occurs and current flows through a bonding strap or safety ground wire. Cross strapping of the return leads is not allowed, as it would reduce the effects of the twisted pair wiring.

5.3.1.1 Power Harnessing

Primary power high side and return wires are twisted and shielded with an overall shield to minimize radiative coupling between primary power ripple currents and instrument/ housekeeping equipment sensors and receivers. The overall shield for the power harness will be 360° connected to power connectors at both the source and load ends.

The connection of the load end of the power harness overall shield will be a 360° termination of the cable shield to the connector shell. This is illustrated and discussed in detail in 20005400, the Electromagnetic Compatibility Design Handbook for the EOS–AM Spacecraft.

5.3.1.2 Isolation

To maintain the integrity of the primary power single–point grounding system, primary power to secondary power isolation is required and is normally achieved by transformer coupling in the power converters, the use of Faraday shields if required, and careful mounting of converter switching transistors and secondary rectifier diodes to minimize coupling to the chassis. The two sets of primary power feeds supplied to each user should maintain the tightest coupling possible between the high side and returns of each feed. The side A and side B high sides should not be connected together, nor should the side A and side B returns be connected together. This isolation shall be maintained on the primary circuit even if the power feeds supply redundant power converters or other redundant loads, such as heaters.

5.3.1.2.1 Deleted

5.3.1.2.2 120 V Primary Power Isolation

The secondary power is referenced to signal return and chassis. The 120 V primary power isolation is necessary to prevent ground loops and to prevent secondary failures from propagating to the primary power. The prime power leads and returns are to be DC isolated from chassis everywhere in the instrument. The capacitance limit of 0.5 μF allows the use of feedthrough capacitors for effective common mode noise control. Note that this is the limit on maximum allowed capacitance. The common mode impedance limit in Section 5.2.2.4.1 in the GIIS provides additional design constraints.

5.3.1.2.3 Secondary Power Isolation

The prime power system is single–point grounded for failure control of ground faults. The secondary side of the power converters is multipoint grounded. The primary–to–secondary isolation is necessary to ensure control of prime power noise and transients during load shifts.

5.3.1.3 Power Reference

There are three types of power references. The prime power reference (PPR) is the point on the Spacecraft where the prime power bus returns and fault ground wires are bonded to the Spacecraft structure. In the event of a fault to chassis, all current would be returned to this point.

Secondary power is referenced to chassis locally at the power converter where it is generated. This allows all parasitic currents to remain local to a component. The requirement for secondary return leads limits the use of structure as a current path.

If the instrument needs power for a circuit and requires isolation from chassis, it may do so as long as a resistive bleed path to chassis is provided. This isolated power is useful for sensors but cannot be used for circuits which interface with the Spacecraft.

5.3.2 Signal Reference

The interfaces to the Spacecraft use the same ground point.

5.3.2.1 Signal Reference Constraints

If the chassis reference point is not used as a power conductor, chassis noise is reduced.

5.3.2.2 Differential Signal Isolation

The differential signal isolation requirement can be met by the use of RS–422 devices. The capacitance requirement allows for filtering if necessary.

5.3.3 Instrument Grounding

5.3.3.1 Instrument Ground Interconnection

The Spacecraft Provider will provide a ground plane to which the instrument and its instrument accommodation equipment will be connected. This ground plane provides a common signal reference between the instrument and the instrument accommodation equipment it is communicating with. For instruments which are collocated with their BDU, this ground plane will consist of a conductive foil adhered to the mounting plate which supports the two boxes. For instruments which cannot be collocated with their BDU, the interface connector panel which supports the harness connectors between the two components will be the common ground plane. In each case, the instrument and its support equipment, such as heater control electronics, is referenced to the Spacecraft ground plane (SRP) via this instrument ground interconnection or interface connector panel.

5.3.3.2 Component Grounding

5.3.3.2.1 Component Ground Location

It is recommended that the instrument place the chassis ground connection, which will be connected to the instrument ground plane, as close as possible to the interface connectors. This localizes all the ground connections, minimizing the possibility of signal ground loops in the instrument chassis.

5.3.3.2.2 Component Ground Connection

The ground connection can be a prepared surface with a tapped hole for a threaded fastener in the instrument chassis.

5.3.3.2.3 Component Bonding Straps

The chassis ground can be bonded to the Spacecraft via a strap which is, in turn, bonded to the instrument via an instrument–provided fastener.

5.3.3.3 Connector Grounding

The connectors will be used to terminate the overall cable shields.

5.3.3.4 Chassis Reference Current

The chassis reference current requirement is intended to prevent the use of chasis as the return conductor for signals and power. It is not intended to prevent the use of coaxial cable whose shield is bonded to chassis at each end.

5.3.4 Fault Ground

5.3.4.1 Instrument Fault Ground Requirements

The purpose of the Spacecraft fault ground system is to assure that each instrument or Spacecraft box to which prime power is routed is properly grounded when the prime power harness is mated to the box. This guarantees the safety of the I&T personnel and the equipment on the Spacecraft by providing an isolated path for currents to flow back to the PPR instead of through the chassis or signal reference plane if a fault should occur on the Spacecraft.

5.3.4.1.1 Instrument Fault Ground Connection

The fault ground wire will be routed in the power harness along with the prime power feed and return. Each instrument should provide a designated pin in the instrument–to–Spacecraft interface power harness connector, separate from the power return, for the fault ground connection.

5.3.4.1.2 Instrument Fault Ground Routing

The instrument is required to route a fault ground wire with the prime power feed and power return to each component within the instrument that uses prime power directly. This insures that the fault ground circuit is complete to all items on the Spacecraft which use prime power. If an instrument does not comply with this, the purpose of the fault ground system would be compromised, which presents a safety hazard to the Spacecraft.

5.3.4.1.3 Instrument Fault Ground Wire Grounding

The instrument is required to ground the fault ground wire to the chassis of each component using prime power directly. The instrument may also attach the fault ground wire to the instrument chassis at the instrument–to–Spacecraft interface power harness connector. However, doing this is not acceptable in lieu of grounding at the internal components using prime power.

5.3.4.2 Spacecraft Fault Ground Requirements

5.3.4.2.1 Spacecraft Fault Ground Routing

The Spacecraft will route the fault ground wire with the prime power feed and power return to insure that the fault ground circuit is complete to every component using prime power. Routing the fault ground wire with the power feed and return provides a low impedance path with fewer connections and with the same integrity as the power feed.

5.3.4.2.2 Fault Ground Wire Connection to Instrument Ground Interconnection

The Spacecraft Provider will provide a fault ground terminal on the instrument ground plane. This fault ground terminal provides for the localization of faults occurring in an instrument or its accommodation equipment such that they cannot propagate to other instruments or Spacecraft equipment.

5.3.4.2.3 Fault Ground Wire Connection to Primary Power Reference

The fault ground terminal on the instrument ground plane is connected to the PPR in the Spacecraft power distribution unit by a fault ground wire routed with the prime power feed and power return completing the fault ground circuit.

5.3.5 Signal Reference Ground

5.3.5.1 Instrument Ground Interconnection Referencing

The SRP is a low–inductance ground plane designed to provide less than 2.4 microhenries of inductance over the length of the Spacecraft. The SRP is utilized such that low level, high speed digital signals will have the same DC reference. All EMs, IMPs, and direct mount

instruments are each bonded to the SRP. The SRP is composed of foil strips (4 mils thick minimum) which are wrapped on the structural truss tubes and bonded to the end fittings. The SRP, therefore, is a lattice of aluminum foil strips and each lattice strip has an equivalent cross sectional area of a number 4 American Wire Gauge (AWG) wire.

Harness shields, coaxial shields, twin–axial shields and external shields on twisted pair wiring are all bonded to the SRP and/or chassis at each end. All of the above shields are tied to the SRP. Therefore, any noise current induced on Spacecraft shields are grounded to chassis and do not pass the interface. Each IMP and EM is sitting on its own ground plane which is bonded to the Spacecraft ground plane at only one point. Return currents flowing in the Spacecraft ground plane are thereby prevented from using the IMP ground plane as a conductor.

In order to properly utilize this ground system, the design of instruments and Spacecraft interface electronics should be such that all secondary electronics (i.e., power which is isolated from primary power) should be referenced to their respective chassis at the point where the secondary power is derived. Spacecraft interfacing circuits are DC referenced to chassis at this point. Optionally, the secondary signals may be referenced to a local chassis ground, which is not directly at the secondary power return but connected to it.

An example of this circuit is given in Figure 5–3. This diagram shows that interface circuits, digital circuits, and secondary power is referenced to chassis ground at a single point. Referencing these circuits at a single point allows maximum effectiveness of the chassis shield. This grounding concept also allows instruments to have an isolated secondary circuit to power instrument sensors and this circuit is referenced to chassis with a DC resistance value suitable for instrument sensor performance. These isolated secondary power circuits cannot however be used to power circuits which interface with components not mounted on that particular IMP. This diagram also shows that the BDU interfaces do not have a signal path which requires use of the instrument ground. Figure 5–4 shows the ASTER grounding interface. This diagram is similar except that the BDU is grounded to the instrument ground interconnection/interface connector panel. Since this BDU is on the instrument ground plane, interfaces which require a ground path for DC reference are allowed.

All overall cable shields on IMPs or direct mount instruments are bonded to chassis at each end. Internal shields on low level, low frequency analog signals do have the option of bonding their chassis at one end only.

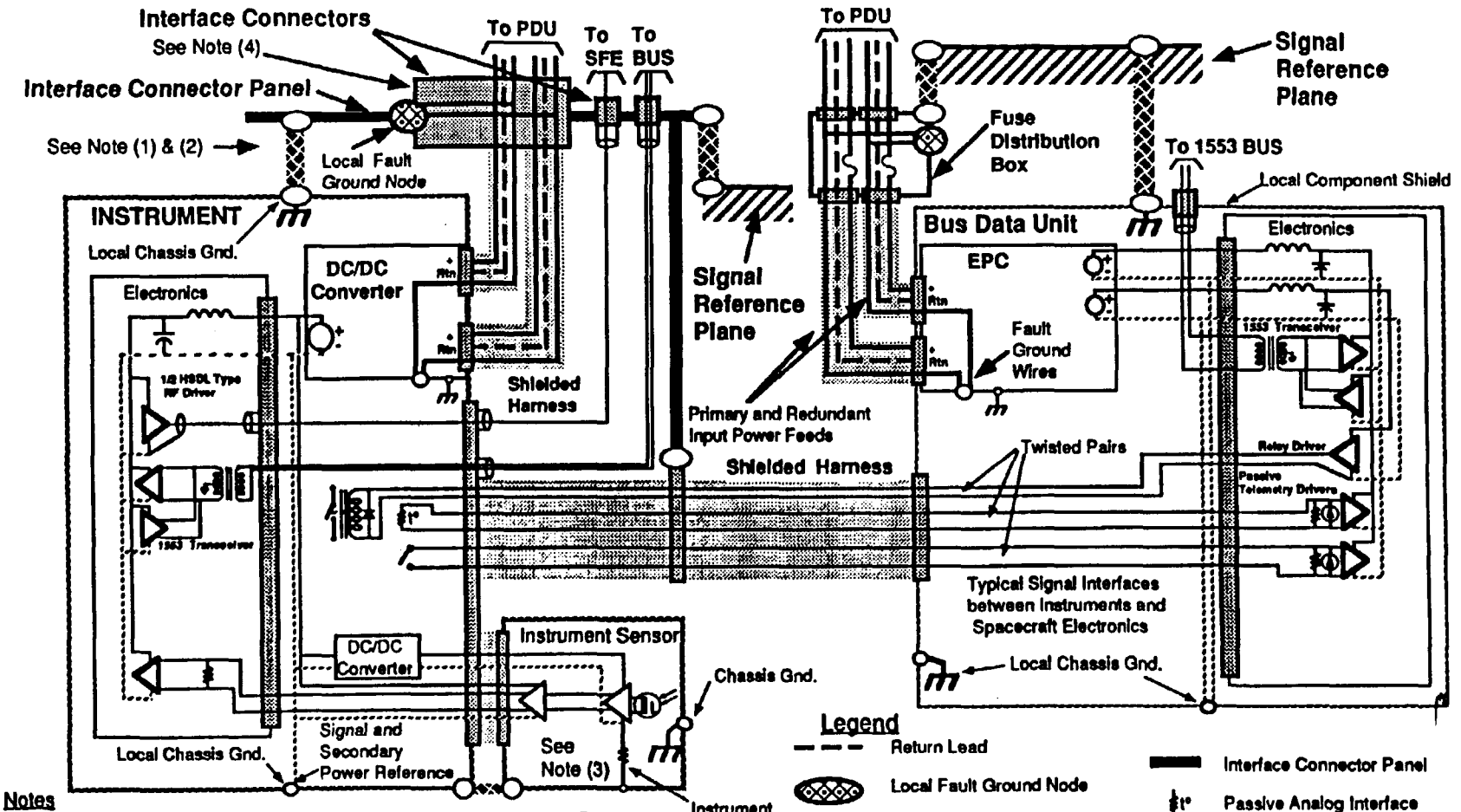

Notes

(1) The low impedance electrical bond paths to the Interface Connector Panel is custom developed for each Instrument installation.

(2) The RF ground path to the Signal Reference Plane is provided by mechanical bonds between the Interface Connector Panel and the Signal Reference Plane.

(3) An example of how isolated DC power may be used to implement a specific chassis ground or reference impedance at the sensor or similar circuit.

(4) Fault Ground wires are bonded to the connector shell and Interface Connector Panel in the connector half which is permanently bonded to the Interface Connector Panel.

PDU = Power Distribution Unit, BDU = Bus Data Unit, EPC = Electrical Power Conditioner
SFE = Science Formating Electronics

Figure 5–3. Secondary Electronics Grounding and Interface Concept

DCC082793

20008502
30 August 1993

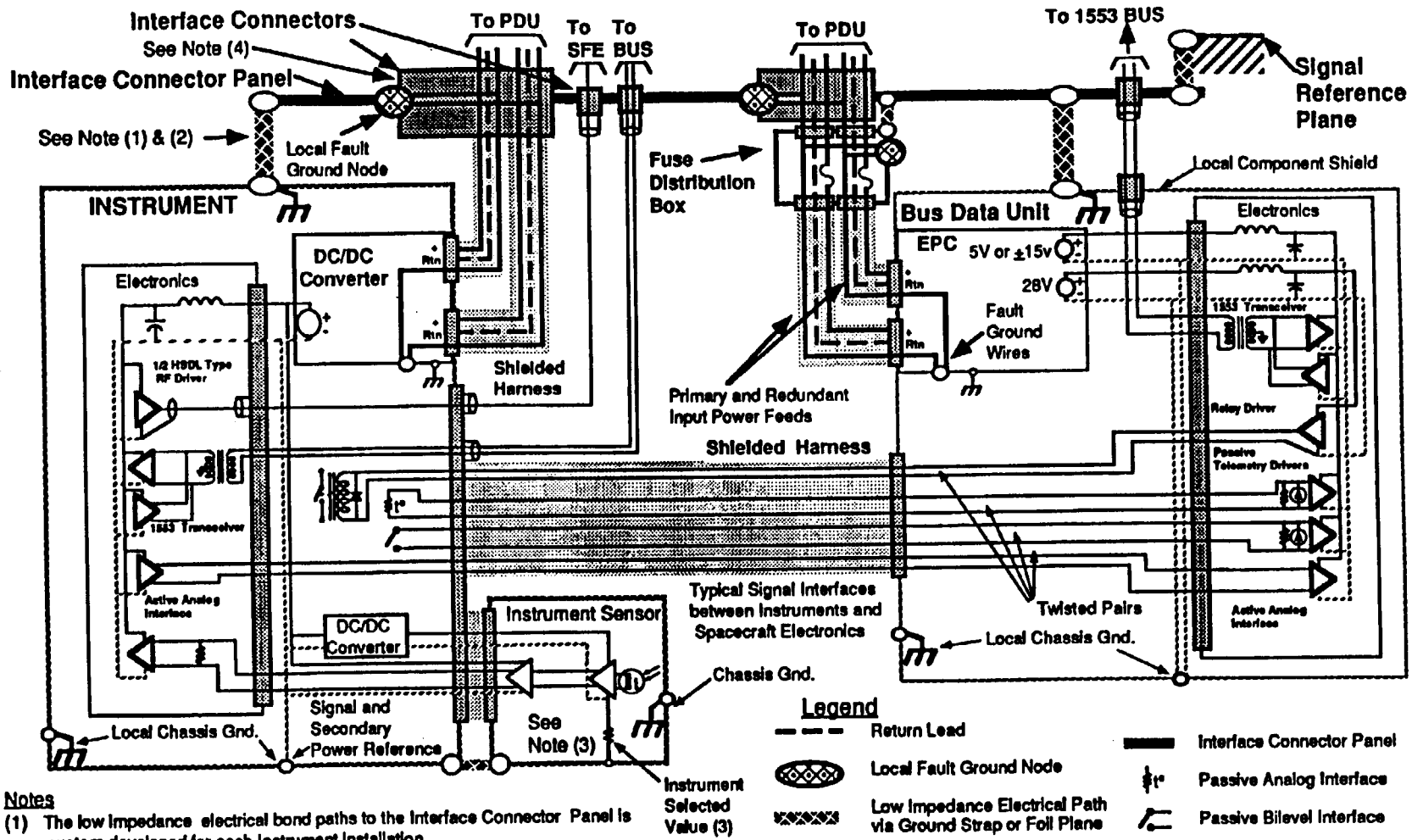

Notes

(1) The low impedance electrical bond paths to the Interface Connector Panel is custom developed for each Instrument Installation.

(2) The RF ground path to the Signal Reference Plane is provided by mechanical bonds between the Interface Connector Panel and the Signal Reference Plane.

(3) An example of how isolated DC power may be used to implement a specific chassis ground or reference impedance at the sensor or similar circuit.

(4) Fault Ground wires are bonded to the connector shell and Interface Connector Panel in the connector half which is permanently bonded to the Interface Connector Panel.

PDU = Power Distribution Unit, BDU = Bus Data Unit, EPC = Electrical Power Conditioner
SFE = Science Formating Electronics

Figure 5–4. Secondary Electronics Grounding and Data Interface Concept for ASTER to Collocated BDU

Interface circuits between individual instrument components need not be true differential signals if the instrument can demonstrate compliance with the emissions and susceptibility of the EMC Control Plan. Interface signals to other Spacecraft mounted components are required to meet the signal interface requirements in PN20005869, Electromagnetic Compatibility Control Plan for the EOS–AM Spacecraft.

In each of these diagrams, secondary power is grounded to the chassis at a single point, preferably at the return lead from the output filter. The secondary ground connection can be made by a minimum–length wire to the chassis or other low–impedance path.

5.3.5.2 Thermal Blanket Grounding

5.3.5.2.1 Thermal Blanket Layer Interconnection

Thermal Blankets are multiple layers of metalized mylar which have their layers connected together at a minimum of two points. The resistance between these points is specified to be less than 3 ohms.

5.3.5.2.2 Thermal Blanket Chassis Grounding

The points of interconnection are to be connected to a wire or braid and be grounded to local the chassis with less than one ohm. The inductance limit of this interface can be met with a wire or strap depending upon length. It is required that the blankets used to "close out" the installation between the Spacecraft and the instrument do not form a ground path which circumvents the designated grounding path via the instrument ground interconnection/interface connector panel.

5.4 Command and Data Handling Interface

The Spacecraft's Command and Data Handling (C&DH) interface to the instrument includes command and telemetry, science data, and time and frequency interfaces. These interfaces are depicted in Figure 5–5.

There are two types of command and telemetry interfaces with the instrument, serial and discrete (point–to–point). The serial command and telemetry interface is made directly between the Spacecraft's Command and Telemetry Interface Unit (CTIU) and the instrument via the Command and Telemetry (C&T) Bus (1553B). This bus carries the majority of commands and telemetry for the instrument. The discrete command and telemetry interfaces are for point–to–point control and monitoring of the instrument: relay drivers and monitoring, temperature sensing, voltage and current monitoring. These interfaces are between the instrument BDU and the instrument.

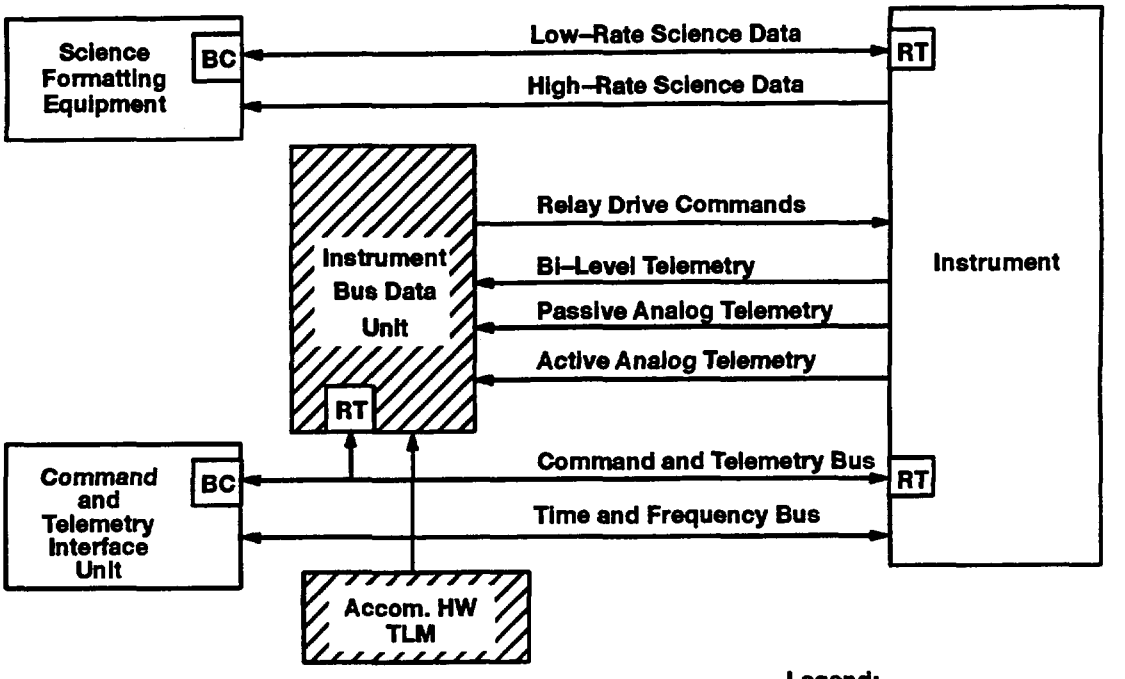

Notes:
1. Each instrument has either a low–rate or a high–rate science data link.
2. Each interface includes a signal wire and a return wire.
3. CERES, MISR, and MOPITT share 1 BDU. MODIS and ASTER each have 1 BDU.

Legend:
Co–located with instrument
RT – Remote Terminal
BC – Bus Controller

Figure 5–5. Instrument Electrical Interfaces

Science data is transmitted from the instrument in one of two ways depending upon the rate of the data. instruments whose data are transmitted at less than 100 kbps are generally allocated a remote terminal port on the 1553B Low–Rate Science Bus. Instruments with higher rates are allocated point–to–point coaxial lines. Both science paths are connected to the Spacecraft's Science Formatting Equipment (SFE) which prepares the data for transmission to the ground. The instruments are also provided with a clock and time reference mark via the Time Mark and Frequency Bus, which is an RS–422 standard interface containing a 1 MHz reference frequency with an encoded time mark signal every 1.024 seconds.

5.4.1 General Signal Interface Requirements

5.4.1.1 Interface Conductors

The grounding scheme for the Spacecraft–to–instrument electrical interface requires that a dedicated return wire be routed back to the source of each interface signal along with the wire supplying the signal. This is to help keep currents from the source component (i.e., the Spacecraft) from traveling through the destination component (i.e., the instrument). If this were to happen, voltage drops due to these currents could create noise in the destination component. These currents would also have to find their way back to the source of the signal through some other interface path. Such a path could be the primary power return, causing noise on the power lines, or through the case of the component, causing radiated emissions.

Coaxial cable is used as a transmission line between the receiver and transmitter for RF and high speed digital signals. The center conductor in this cable is surrounded by a grounded shield or braid. This shielding prevents capacitive coupling, or crosstalk, between adjacent conductors. An alternative to coaxial cable is the twisted pair. The signal wire and a ground conductor are twisted together to form a balanced transmission line. Twisting the pairs form current loops in the opposing direction. This has the effect of cancelling the induced magnetic fields, thus reducing electromagnetic interference (EMI). A shield is generally provided over the twisted pairs, either at "a pair" or bundles of "twisted pairs." At lower frequencies (i.e., up to 4 MHz) shielded, twisted pairs provide better shielding and lower crosstalk than coaxial cable. Their higher loss is a disadvantage for higher frequencies. Twinax is a controlled impedance twisted shielded pair. This is the cable type used for the MIL–STD–1553 data buses. The connector used for this cable is a triaxial connector (i.e., center pin and two coaxial shield contacts). The triaxial connector center and intermediate contacts are used for the twisted pair conductors, while the outer shield is carried by the connector body.

The high speed data link uses a dual coax interface. This comprises two adjacent coax cables. The coax cables are matched in electrical length and are routed together to reduce magnetic loop area.

5.4.1.2 Interface Redundancy

5.4.1.2.1 Redundant Interface Terminology

All Spacecraft–to–instrument electrical interfaces can be redundant. Components which have redundant signals should designate them as Side A or Side B to ensure proper harnessing. There is no preference in the use of one side or the other; there is no "primary" side.

5.4.1.2.2 Redundant Interface Usage

5.4.1.2.2.1 Command Interfaces

The Spacecraft may use either side A or side B of any interface for commanding, therefore the instrument must be able to receive commands on either side at all times. In the case of a failure in the interface, command execution verification is determined by the ground, relying on valid telemetry.

5.4.1.2.2.2 Deleted

5.4.1.2.2.3 Deleted

5.4.1.2.3 Interface Fault Tolerance

Both sides of the interface are fully redundant and tolerant to a single fault on either side. The Spacecraft side of the interface is a part of the fully redundant Spacecraft C&DH subsystem. The instrument side of the interface is required, as a minimum, to be redundant in all circuitry in contact with the interface. For instance, the instrument side of the Command and Telemetry Bus is required to be redundant through the transceivers (instrument electronics in contact with the interface). In the case of a transceiver failing, there is an alternate path through the redundant transceiver and its dedicated encoder channel; thus the interface is tolerant to single fault.

5.4.1.3 Interface Circuitry Isolation

The instrument side A and side B interface circuitry are electrically isolated. They are required to have separate connectors entering the instrument, separate interface electronics, and separate interconnection. This is to prevent a failure on one side of the instrument interface from affecting the other. Interface electronics for side A and side B must be isolated from each other, but electrically isolated, dual packages may be used. The STC FC1553921 dual transceiver is an example of such a package, with isolated channels and separate power and ground pins for each half of the package. One half can be used for side A and one half for side B.

The signal reference for the entire instrument electrical interface (side A and side B C&DH and Power) is required to be electrically the same point and connected to the instrument's Secondary Power Reference (SPR). This will ensure that the electronics on both sides of the interface are referenced to the same point.

5.4.2 Point–to–Point Command and Telemetry Interfaces

Point–to–point interfaces consist of all non–serial command and telemetry interfaces between the Spacecraft and the instrument. There are four different types of point–to–point interfaces as listed in the GIIS. The BDU provides these services as allocated to the instruments in the UIIDs.

These interfaces are physically made between the instrument BDU and the instrument. Typical functions include power control, redundancy management, temperature sensing, and voltage and current monitoring. Point–to–point interfaces must be sufficient for all instrument control and monitoring when the instrument is powered off. All critical monitoring should be sufficiently covered with point–to–point interfaces. This is beneficial because any critical Health and Safety covered by point–to–point interfaces does not have to be formatted and transmitted across the serial interface.

5.4.2.1 Relay Drive Commands

Relay drive commands are pulsed 28 volt signals that are used to directly drive the coils of latching relays within the instrument. These commands are typically used for powering the instrument on/off and for switching between redundant circuitry within the instrument. Only latching relays are used and only one relay driver is activated at a time. An example of the circuit for the relay drive command, including redundancy, is given in Figure 5–6.

The latching relay used is typically a double–pole/double–throw. This provides a set of two contacts moving together when the relay drive command energizes the relay coil. One contact is used for the function being performed (e.g., power control), and the other contact is used to provide isolated monitoring of the relay's position via passive bi–level telemetry. These latching relays come in a compact package (TO–5) from Teledyne.

5.4.2.1.1 Deleted

5.4.2.1.2 Relay Drive Command Characteristics

The specified drive characteristics are suited to most latching relays. The Teledyne latching relays have been used extensively in space–flight equipment and are the suggested implementation. They come in a variety of configurations, including the double–pole/double–throw as mentioned in Section 5.4.2.1.

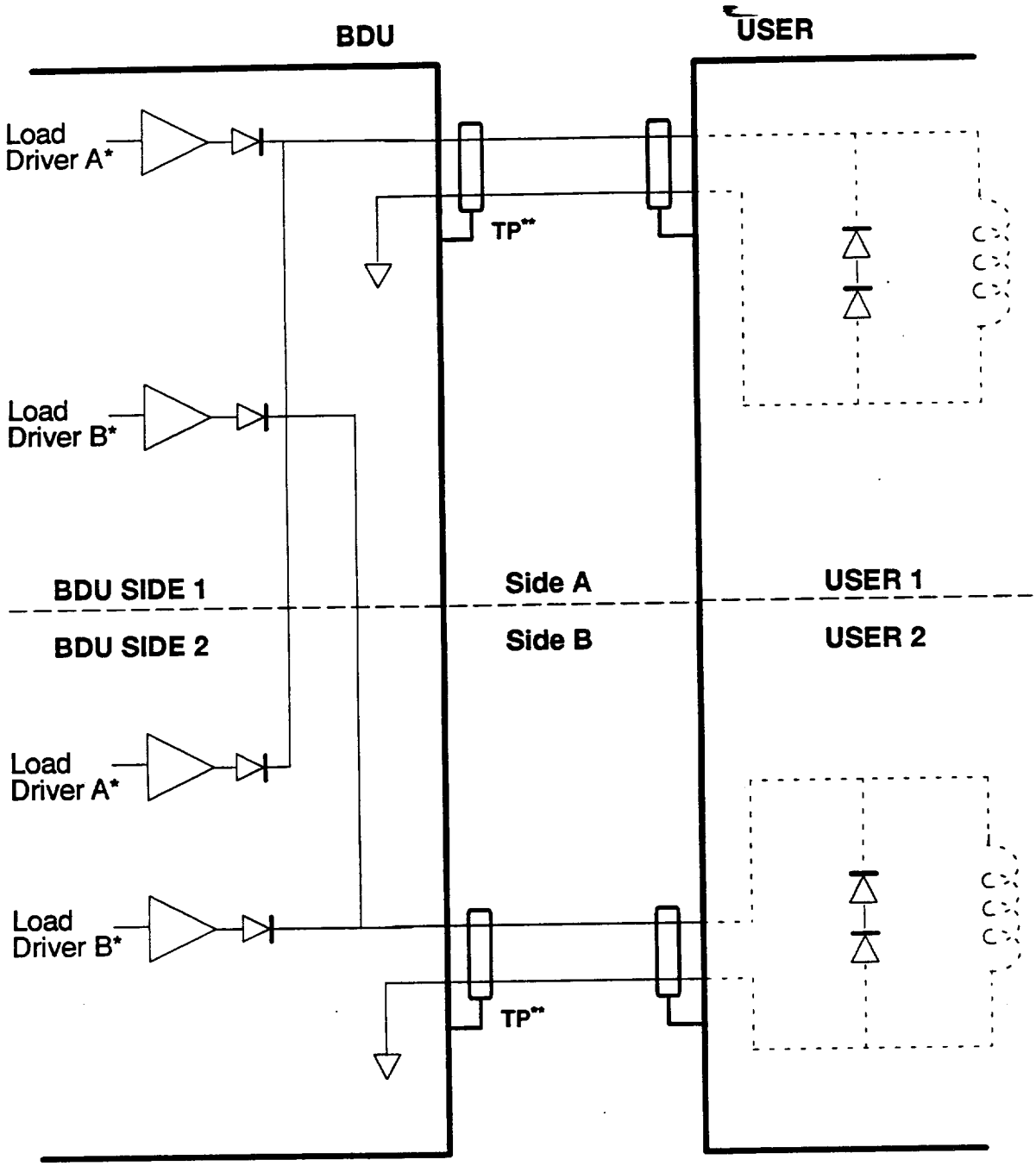

* Redundant drivers on a BDU shall each be located in a separate IC package.

**Shield can be used for more than one twisted pair.

Note: Relay I/Fs will be sent in a wrapped bundle with a single shield.

Figure 5–6. Standard Relay Drive Interface Circuit

5.4.2.1.3 Relay Drive Command Load Characteristics

Electronic devices controlling inductive loads can be easily damaged by the current that is initially forced to continue when the driver tries to turn off. Suppression diodes across the inductor (relay winding), as shown in Figure 5–6, are the best solution. When the driver is on, the diodes are back–biased (from the DC drop across the inductor's winding resistance). At turn–off, the diodes go into conduction, absorbing the current being forced by the inductive load. The diodes must be sized to handle the pulse active load current, which is equal to the current that will be seen by the diodes at turn–off. There should be two diodes to provide fault tolerance.

5.4.2.2 Deleted

5.4.2.2.1 Deleted

5.4.2.2.2 Deleted

5.4.2.3 Passive Bi–Level Telemetry Interface

Passive bi–level telemetry lines enable the sensing of instrument relay positions by determining switch closure. Relays to be monitored by these lines are typically configured as double–pole–double–throw, with one half providing the function and the other connected to the bi–level line as a monitor point. When the relay is commanded to change position, the monitoring half of the relay also gets changed, enabling an isolated external monitoring of the relay's position. In the case of solid–state switches, a parallel circuit is used to determine switch state. An example of the circuit for the passive bi–level command, including redundancy, is given in Figure 5–7. Passive bi–level telemetry from the instrument should provide enough information to indicate if it is safe to apply power to the instrument and should include the following:

a. Instrument Power ON/OFF

b. Survival Heater ON/OFF

c. Cooler Power ON/OFF (if applicable)

d. Instrument–specific device ON/OFF

e. Instrument Operating Mode

5.4.2.3.1 Deleted

5.4.2.3.2 Passive Bi–Level Telemetry Signal Characteristics

The signal characteristics of the passive bi–level telemetry signal are representative of the closed (logical "0") and open (logical "1") contact of a relay. In the logical "0" position, the contact of the relay is closed and the interface sees a short circuit. In the logical "1" position,

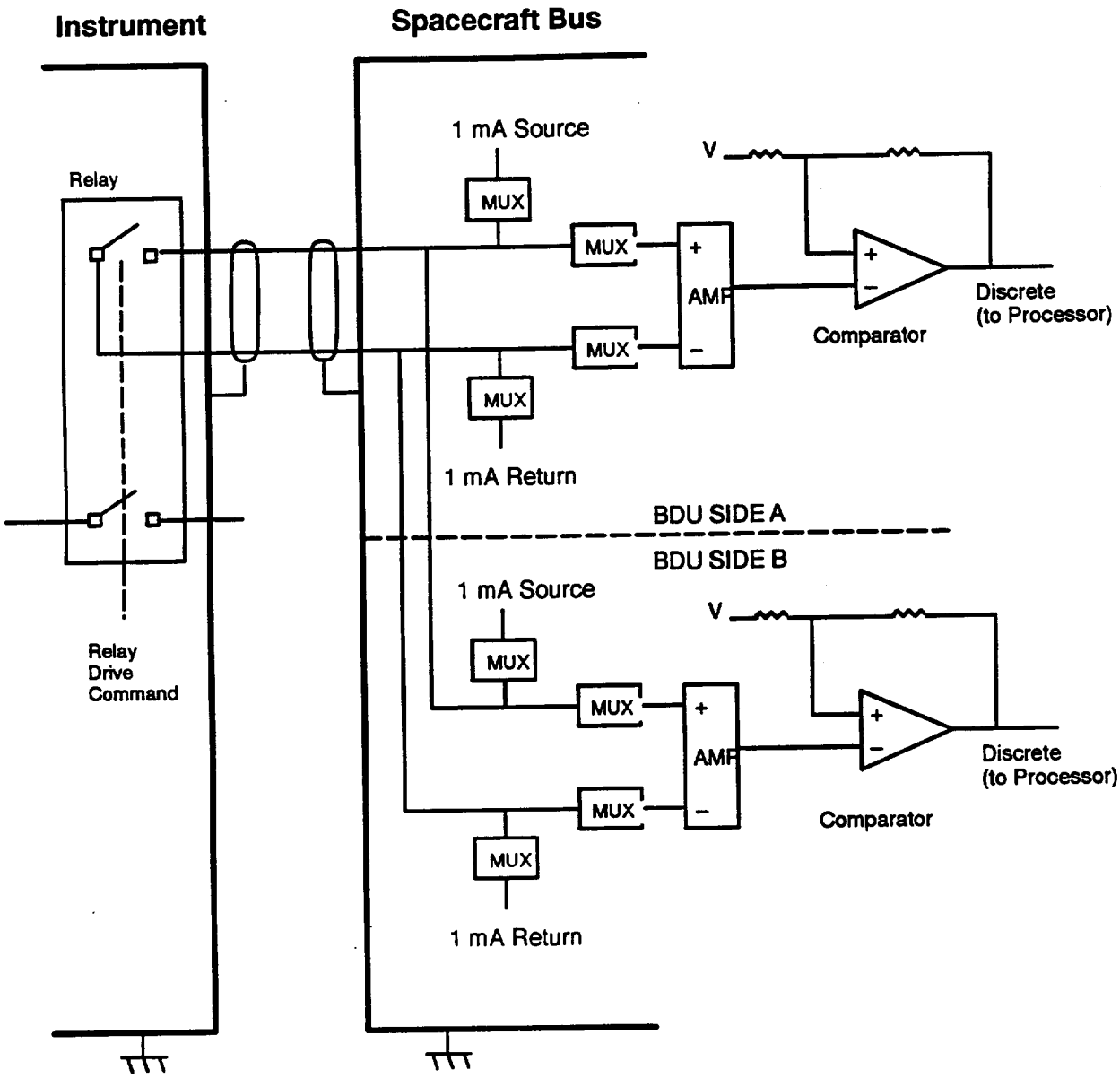

Figure 5–7. Standard Bi–Level Telemetry Interface Circuit

the contact of the relay is open and the interface sees an open circuit. The Spacecraft supplies the 1 mA current to sense the relay's position and so the instrument need only supply the routing of the signal between the interface connector and the relay being sensed.

5.4.2.4 Passive Analog Telemetry Interfaces

Passive analog telemetry provides a method of measuring the resistance of sensors, and is intended specifically for monitoring temperatures using thermistors mounted on the instrument. An example of the circuit is given in Figure 5–8. There is no electrical connection between the instrument and the thermistor; the thermistor is mounted on the instrument, and a connection is supplied to the thermistor that is accessible during integration to the Spacecraft. The Spacecraft provides all the drive electronics as well as providing the 8–bit analog–to–digital conversion. Passive analog telemetry will be collected during normal operations as well as in Safe Mode. Typical telemetry points include:

a. Power converter temperature

b. Passive cooler temperature

c. Instrument–specific device temperatures

d. Pressure transducer data

5.4.2.4.1 Deleted

5.4.2.4.2 Passive Analog Telemetry Signal Characteristics

The devices (thermistors) used by the Instrument for passive analog telemetry are required to be $\leq$ 5 kilohms. The Spacecraft will source a 1 mA current through the device and read the voltage for inclusion in the housekeeping telemetry. This voltage is then converted to a temperature on the ground. Conversion curves should be supplied by the Instrument Provider.

5.4.2.5 Active Analog Telemetry Interfaces

Active analog telemetry enables the high impedance monitoring of voltages within the Instrument ranging from –15 to +120 volts. The instrument scales down the signal to 0 to 5 volts for the interface. The BDU provides 8–bit analog–to–digital conversion (0.02 volt resolution). An example of the circuit for the active analog telemetry, including redundancy, is given in Figure 5–9. Typical examples of active analog telemetry points are the monitoring of instrument input voltage and current.

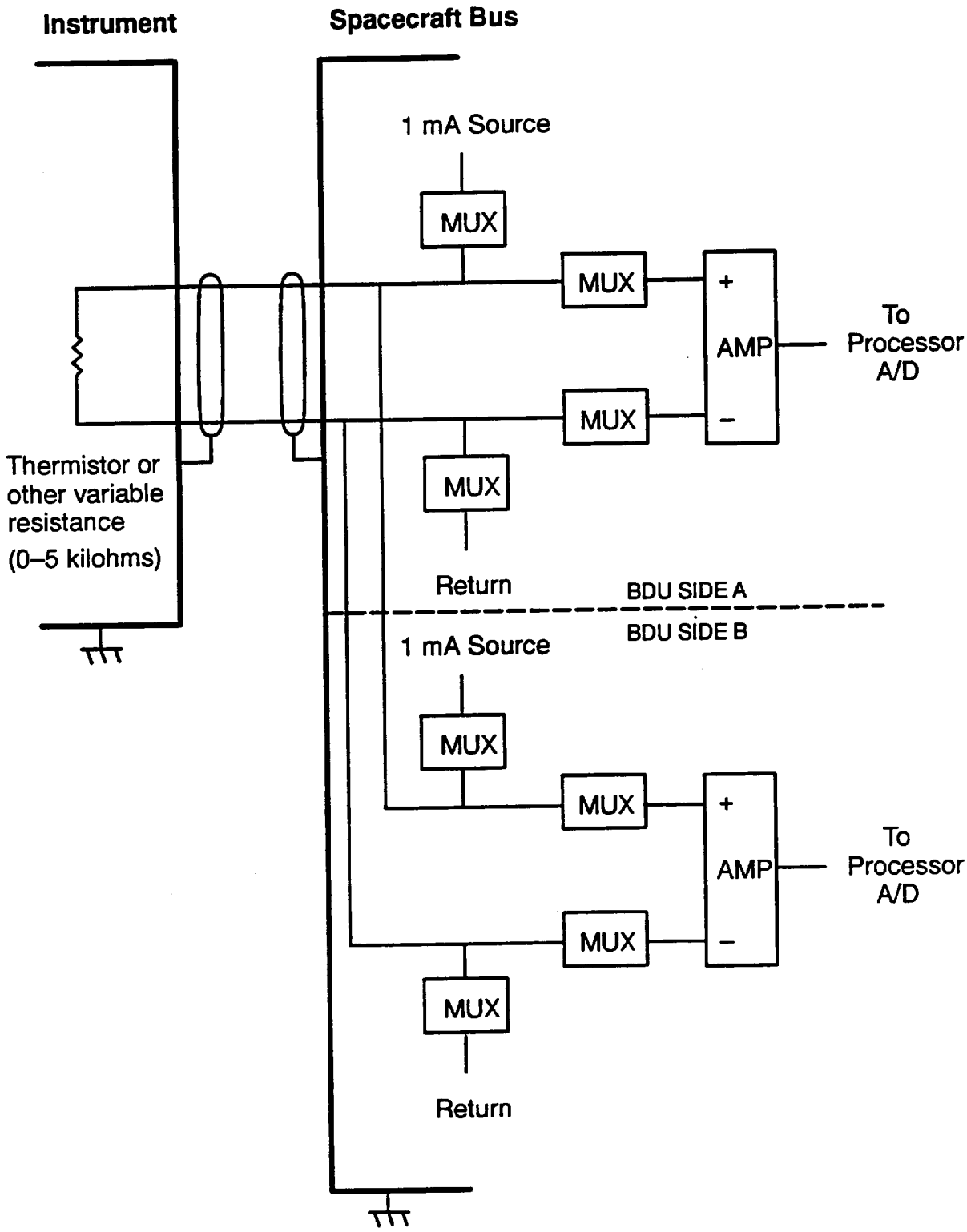

Figure 5–8. Standard Passive Analog Telemetry Interface Circuit

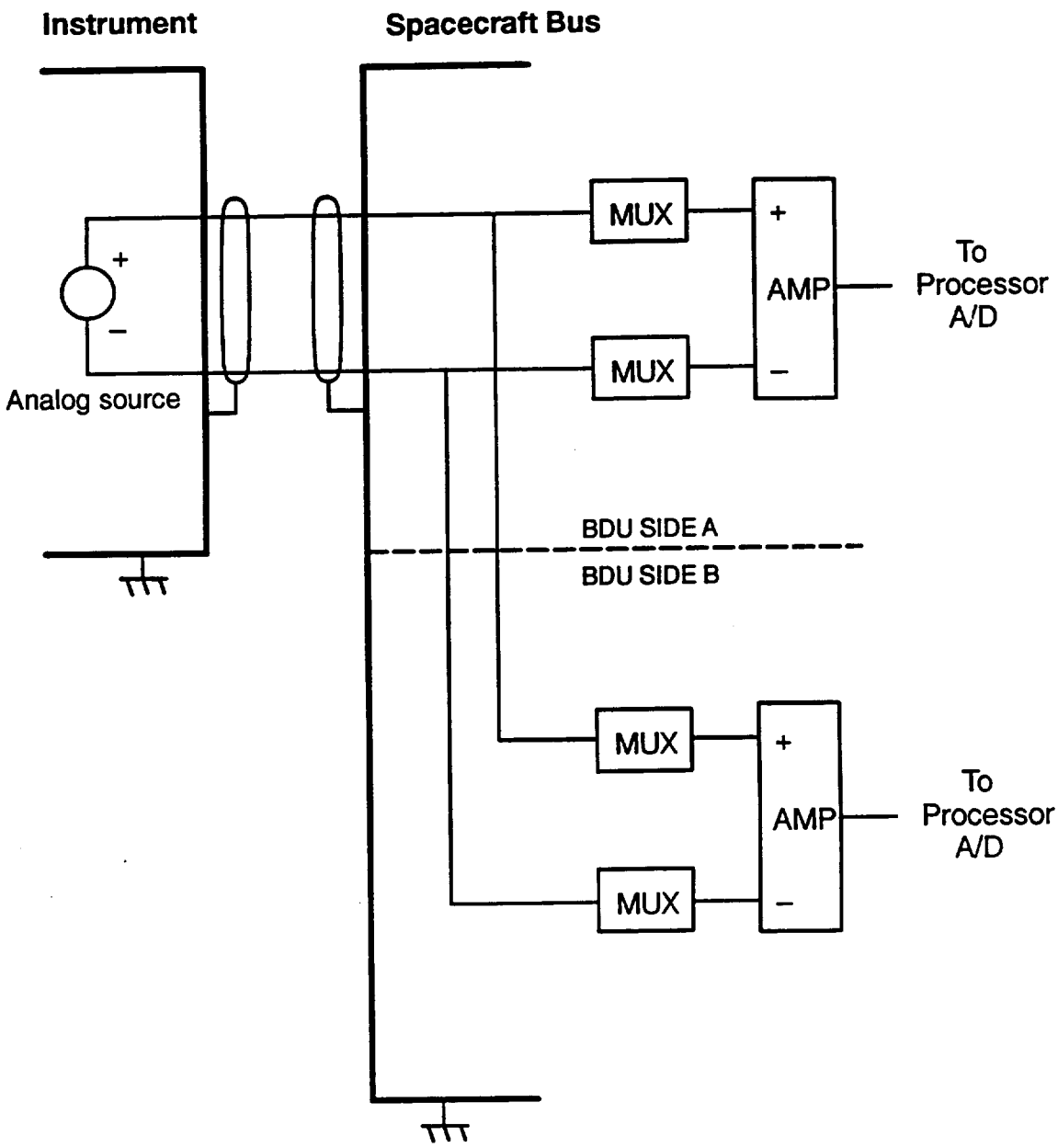

Figure 5–9. Standard Active Analog Telemetry Interface Circuit

5.4.2.5.1 Deleted

5.4.2.5.2 Active Analog Telemetry Signal Characteristics

Active Analog Telemetry is provided to the Spacecraft as a 0–to–5 volt signal.

5.4.3 Time Mark and Frequency Bus

The time mark and frequency bus is a single redundant serial interface providing a 1.0 MHz reference frequency and a time mark at 1.024–second intervals. The reference frequency is derived from a Master Oscillator (MO) in the Spacecraft CTIU and distributed to all instruments as a means of establishing a reference clock between the Spacecraft and the instrument. The time mark indicates when the time code data, transmitted on the command and telemetry bus, is valid. The standard interface circuits for the time and frequency interfaces are shown in Figure 5–10.

5.4.3.1 Reference Frequency Electrical Characteristics

The time mark and frequency bus utilizes the EIA–RS–422 differential signal interface standard.

5.4.3.2 Time Mark Encoding

The time mark is embedded in the 1 MHz reference frequency by varying the pulse–width of the reference clock as shown in Figure 6–4 of the GIIS. This decreases the number of interfaces required by having the reference frequency and the time mark use the same interface.

5.4.3.3 Time Mark Encoding

Instruments should jam local clock with time code data at time mark, and propagate local clock between the time marks using the Time and Frequency Bus frequency reference (count cycles).

5.4.3.4 Time Mark Accuracy

The accuracy of the time mark will be maintained on the Spacecraft by two basic methods. The first method is the initialization which will be commanded via the uplink. The commands are to set the clock and a delta time. After initialization, the clock will increment sequentially, unless a failure occurs requiring the Spacecraft clock to be reset.

The second method is the varying of the MO frequency. The MO frequency will be slightly varied (<1 part in 10^8) to account for measured drift rates and frequency offset. This method will keep the Spacecraft clock within 100 μsec of the Universal Time Code (UTC) after initialization.

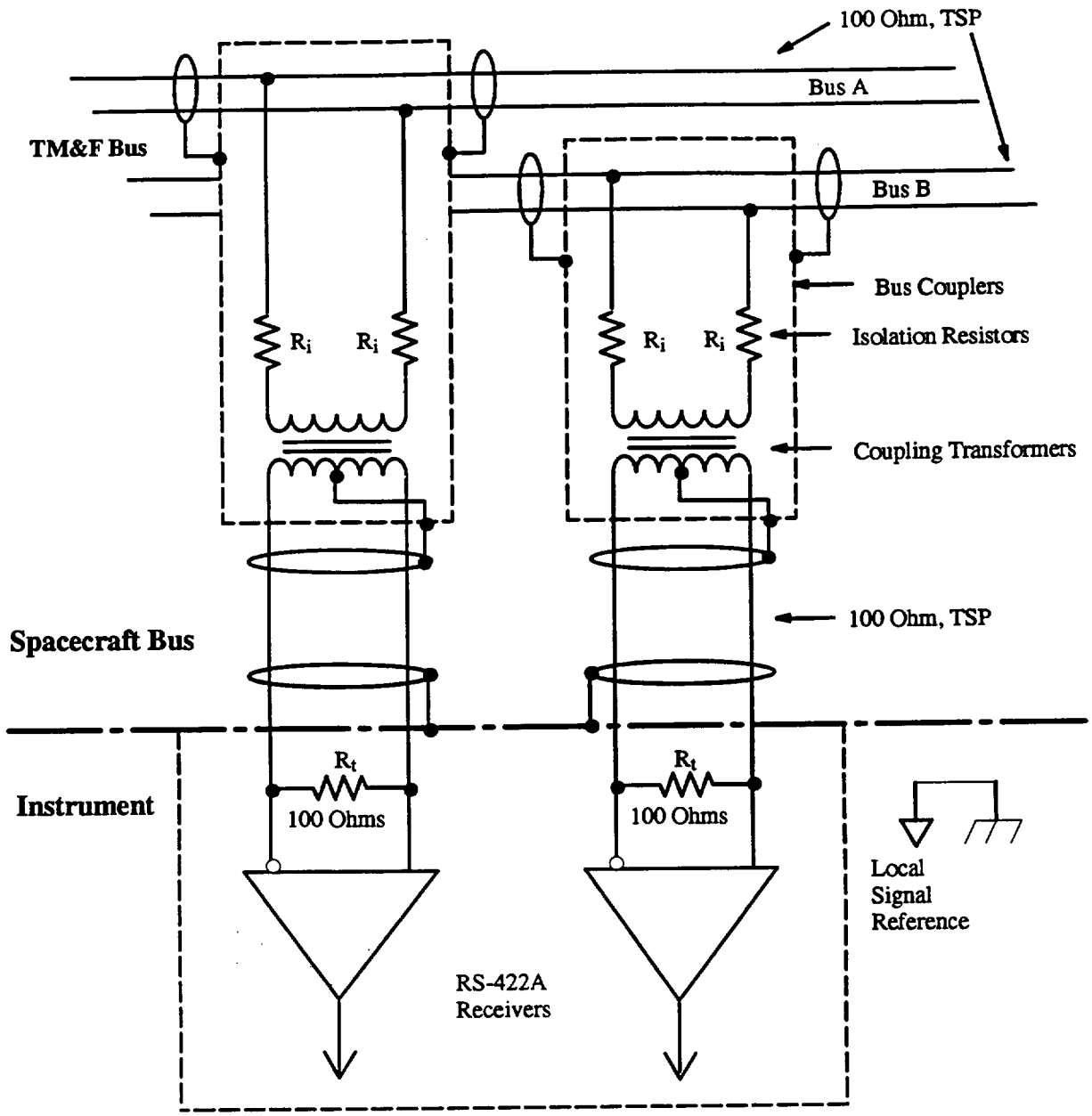

NOTES: Cable characteristic impedance (Z0) = 100 ohms
Proposed Cable Type = Gore CXN2702
TSP = Twisted Shielded Pair
Proposed RS–422 Receiver = 26CT32 (Harris)

Figure 5–10. Time Mark and Frequency Interface Circuit

5.4.4 Command and Telemetry Bus Electrical Interface

The Command and Telemetry Bus is a standard 1553B serial multiplex data bus. The Spacecraft CTIU is the Bus Controller (BC) on the bus and the instruments are remote terminals (RT).

5.4.4.1 Command and Telemetry Bus Electrical Characteristics

The standard interface circuit for the 1553 interface is given in Figure 5–11. The Spacecraft side of the interface consists of a fully redundant 1553B bus: separate CTIU bus controllers, isolated harnessing, individual coupling transformers, and separate external connectors at the instrument interface. The instrument side of the interface is required to be fully redundant up to and including the circuitry in contact with the interface (i.e., the transceivers). The recommended transceivers are available in a dual package, with each side of the package being isolated (i.e., separate power and ground), and the recommended manchester encoder having independent side A and side B interfaces. In the event of a failure of any element on the bus, the redundant bus is isolated.

An increased level of redundancy can be accomplished, as shown in Figure 5–12, by cross–strapping between separate sets of transceivers and encoders. This redundancy configuration is appropriate for fully redundant systems (separate side A and side B) and is used internal to the Spacecraft for interfacing to the command and telemetry bus. In the event of a failure of an encoder, the other encoder in the instrument is still able to use the interface for communications. The relays used in the cross–strapping are commanded with relay drive commands.

5.4.5 Science Data Electrical Interface

The science data electrical interface transmits all instrument science and engineering data to the Spacecraft for transmission to the ground. This interface is either a high–rate interface, utilizing dedicated point–to–point coaxial lines; or a low–rate interface, utilizing the 1553B bus standard.

5.4.5.1 Science Data Interface Control

Control of whether the instrument uses the low–rate or the high–rate interface, as well as the allocated data rate, is documented in the instrument UIID.

5.4.5.2 Low–Rate Science Data Interface Electrical Characteristics

The low–rate science data bus is a standard 1553B serial multiplex data bus. The standard interface circuit for the 1553 interface is given in Figure 5–12. The Spacecraft side of the interface consists of a fully redundant 1553B bus: separate SFE BCs, isolated harnessing,

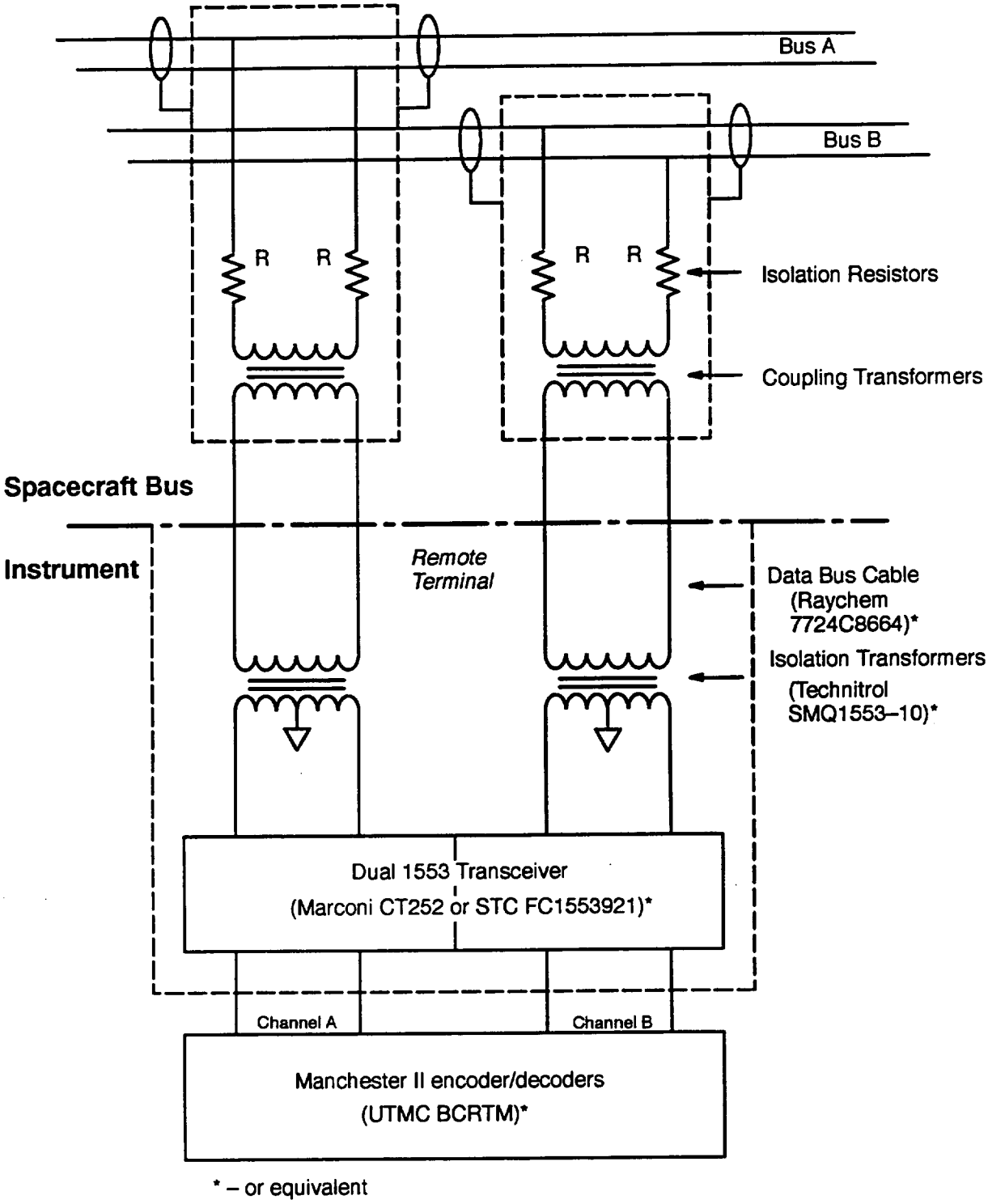

Figure 5–11. Command and Telemetry Bus and Low–Rate Science Bus

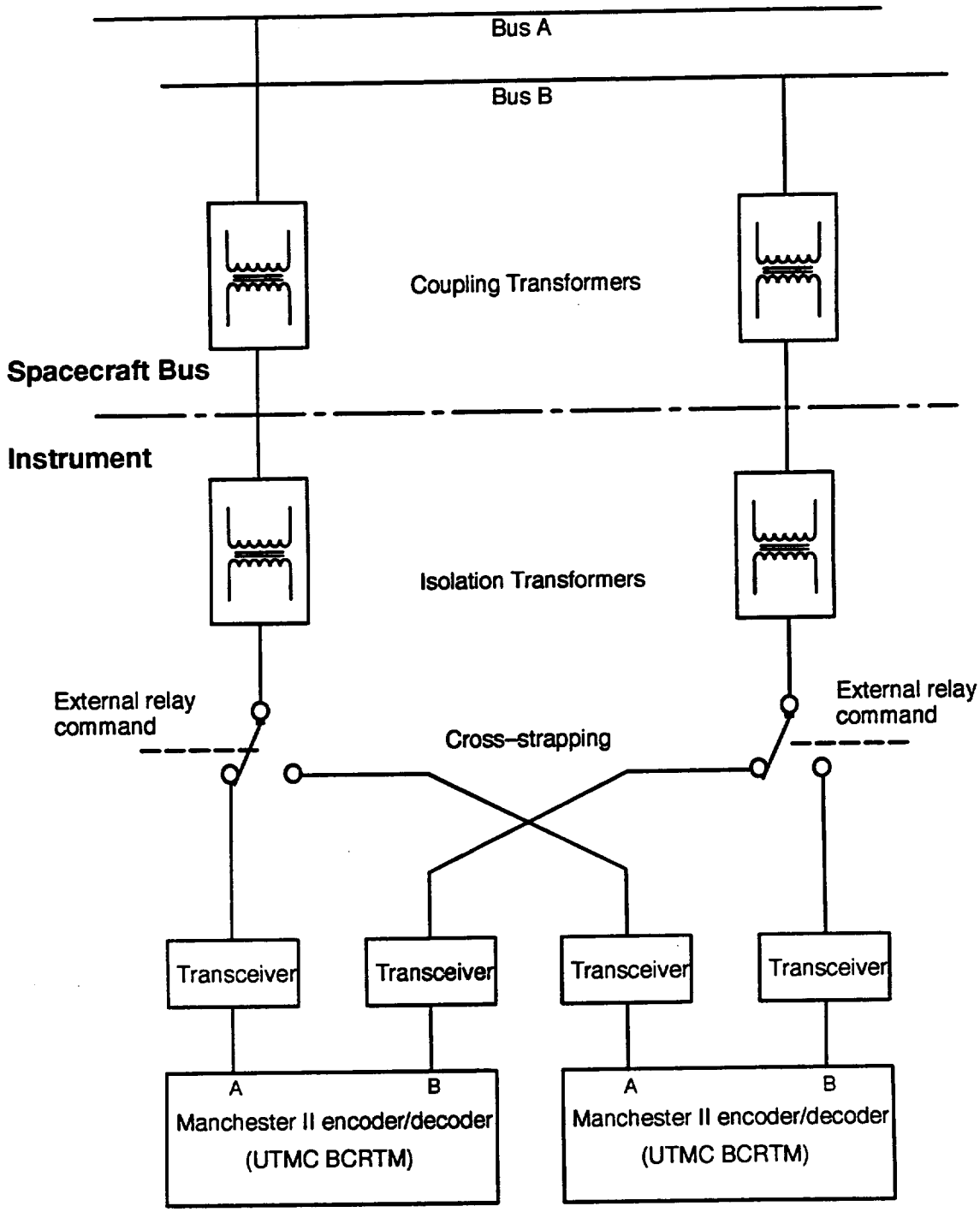

Figure 5–12. Cross–Strapped 1553 Remote Terminal interface

individual coupling transformers, and separate external connectors at the instrument interface. The instrument side of the interface is required to be fully redundant up to and including the circuitry in contact with the interface (i.e., the transceivers). The recommended transceivers are available in a dual package, with each side of the package being isolated (separate power and ground), and the recommended manchester encoder has independent side A and side B interfaces. In the event of a failure of any element on the bus, the redundant bus is isolated.

5.4.5.3 High–Rate Science Data Interface Electrical Requirements

The high–rate science interface provides a high–bandwidth point–to–point interconnection from the instrument to the Spacecraft SFE. This interface is typically used for instruments with data rates in excess of 100 kbps. For instruments with data rates in excess of 50 Mbps, multiple point–to–point interconnections are provided. The interface is unidirectional, with data flowing in only one direction from the instrument to the SFE. An example of the circuit for the high–rate science interface is given in Figure 5–13.

5.4.5.3.1 High–Rate Interface Circuitry

5.4.5.3.1.1 Instrument High–Rate Science Data Interface Circuitry

The instrument drivers for the high–rate link are differential. The Advanced Micro Devices Am7968 "TAXIchip" transmitter is recommended to the instrument for use on this interface. The TAXI transmitter consists of an input latch, an encoder, a parallel–to–serial shift register, a multiplying Phase Locked Loop, and some control logic. It has differential "Pseudo" Emitter Coupled Logic (PECL) outputs which can drive 50 ohm terminated lines. PECL is ECL type logic designed to be referenced at a positive 5 volt level. This capability makes it easy to directly interface with coaxial cable.

5.4.5.3.1.2 Instrument High–Rate Science Data Signal Interface Coupling

The media used will require that the link be terminated at the receiver and AC coupled at the driver, so that an incompatible power supply and/or logic level requirement will not degrade the link. The capacitor at the driver blocks the DC in the line, and the termination at the receiver provides a DC bias level. Since only AC variations are passed through the coupling capacitor, the bias level at the termination will be set to the midpoint of the signal swing of the receiver, to equalize the voltage drop in both HIGH and LOW states.

5.4.5.3.1.3 Spacecraft High–Rate Science Data Interface Circuitry

The Spacecraft receivers for the link are differential. The Advanced Micro Devices Am7969 "TAXIchip" receiver is the recommended implementation on the Spacecraft side of the interface. The TAXI receiver accepts the PECL level–compatible encoded data stream

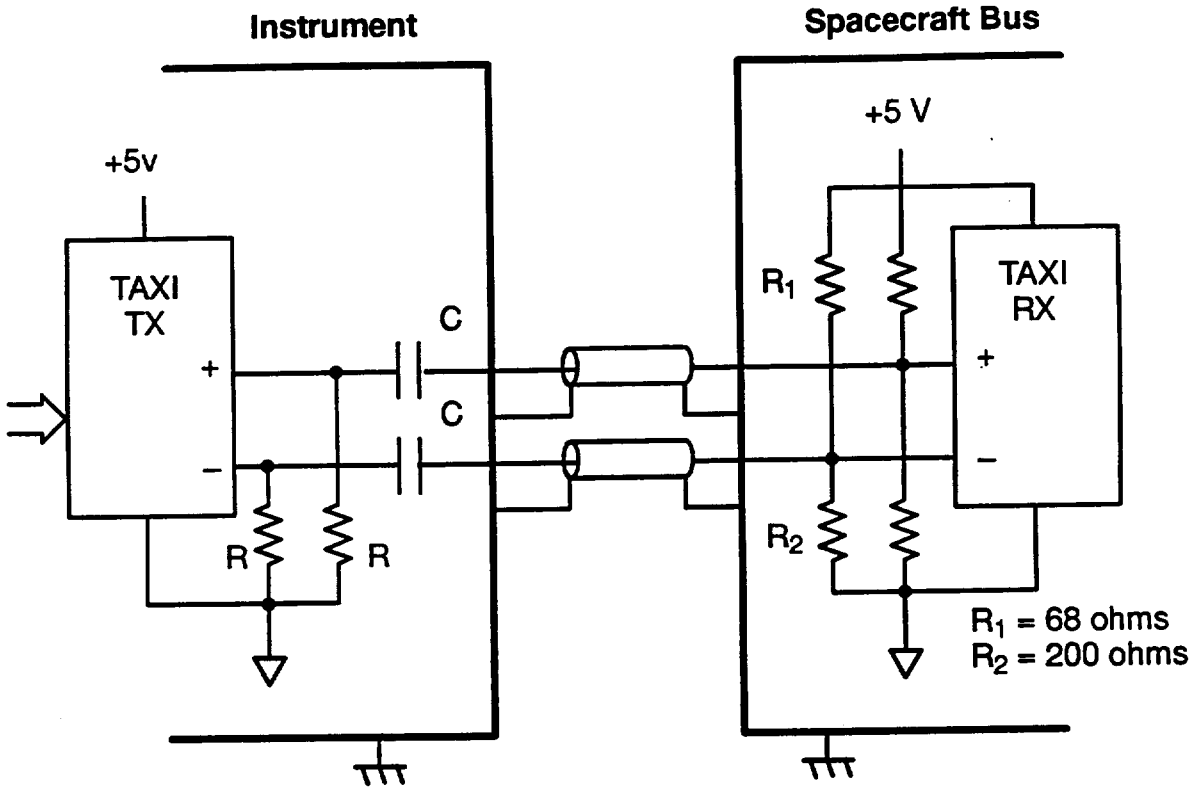

SUGGESTED COMPONENTS:

TAXI TX – AMD, Am7968 TAXIchip Transmitter

TAXI RX – AMD, Am7969 TAXIchip Receiver

R = 300 ohms

C = 0.1 μF

Line termination impedance Z_o = 50 ohms

⇒ Parallel input, TTL, 8 bits
or
Serial +5 V ECL

Figure 5–13. Standard High–Rate Link Interface

into a serial–to–parallel converter, decodes and outputs the received data or commands with an accompanying strobe. An on–chip data tracking PLL performs the necessary clock recovery from the input serial data stream and outputs it at the same byte rate of the transmitter.

5.4.5.3.1.4 High–Rate Science Data Interface Polarity Inversion

For simplicity, no element (e.g., driver, cable, or receiver) of the interface will invert the polarity of the differential signal. This will minimize the possibility of unintentionally inverting the data due to a misunderstanding between the Spacecraft Provider and the Instrument Provider.

5.4.5.3.2 High–Rate Science Data Interface Electrical Characteristics

The data throughput of the high–rate science data interface is 50 Mbps. However, each link runs at 63.5 Mbps when transmitting data (regardless of the instruments data rate); messages are bursted over the link. The data encoding scheme used to send the messages over the link is based on the ANSI X3T9.5 (FDDI) committee's 4–bit/5–bit coding. This encoding is 80% efficient, using a 63.5 Mbps transmission rate to have an effective data throughput of 50.8 Mbps. The extra 0.8 Mbps is necessary to handle the overhead associated with generating a message to be passed over the link.

5.5 Other Interfaces

5.5.1 Test Point Interfaces

Test points are special test measurements which cannot be accomplished via telemetry. They may also provide signal inputs which cannot be easily simulated via external targets in a test environment. Test point parameters may include non–telemetered data. Electrical interfaces required by the instrument for special test purposes at the Spacecraft integration level are accessed through connectors separate from the instrument's functional connectors. These connectors are provided with flight quality captive covers.

5.5.1.1 Spacecraft Integration and Test Use

No provisions are being made for any harnessing at the Spacecraft level beyond that required for flight. Therefore, using test points during I&T is very undesirable.

5.5.1.2 Performance Verification Limitation

In addition to the problems of the harnessing, any special test equipment required to interface to an instrument to verify operation and performance will be difficult to accommodate and could disturb the test parameters.

5.5.1.3 Keyed Connectors

A test point should not be placed on a flight connection to preclude disturbance of the flight interfaces with test signals. Isolation between signals provides a more fault tolerant design.

5.5.1.4 Power and Load Isolation

The Instrument shall not be powered through, nor significantly loaded, by test point interface circuitry, including connection to external GSE.

5.5.1.5 Failure Propagation

A fault on the test connector or the test point signals should not affect the performance of the instrument.

5.5.1.6 Short–Circuit Isolation

The faults that should be tolerated are: shorts to the power bus, ground, or another test point, and removal of the short.

5.5.1.7 Grounding Integrity

The test points and associated IGSE should not create ground loops during testing of the instrument.

5.5.1.8 EMI/EMC

The EMI/EMC testing or other electrically sensitive tests should not be compromised by the test connection or the use of associated IGSE.

5.5.1.9 Flight Standards

The standards used in building the instrument should be maintained when designing the test point circuitry. Two sets of standards are difficult to maintain. Proof that the lower standard design does not compromise the higher standard is very difficult.

5.5.1.10 Mechanical Requirements

All test points must be physically accessible with reasonable effort to allow for removal of connectors and preparation for flight.

5.5.2 Test Point Interface Documentation

All connectors, contact assignments, and functions for instrument–to–Spacecraft connections will be identified by the Instrument Provider and documented in the I&T ICD.

5.6 Failure Modes and Effect Analysis

The methods to be used for performing the required Spacecraft–to–instrument circuitry FMEA are documented in 20008607.

(This page intentionally left blank.)

6 COMMAND AND DATA HANDLING REQUIREMENTS

The Command and Data Handling Subsystem (C&DHS) provides onboard computing resources and digital communications resources. It also is responsible for the baseband handling of all uplinked messages received from the Communications Subsystem (COMMS) and for coordinating the telemetering of all Spacecraft and instrument generated data to be down linked through the COMMS.

The principal services provided by the C&DHS to the instrument are as listed:

a. Distribution of real–time and stored commands uplinked from the ground, and of Spacecraft Controls Computer (SCC) generated commands.

b. Periodic gathering of housekeeping telemetry (critical health and safety telemetry and normal housekeeping telemetry), and the formatting of these data for transmission to the ground.

c. Generation and distribution of precise, accurate time and frequency references.

d. Collection, storage and distribution of low–rate and high–rate science data.

e. Monitoring of housekeeping telemetry for instrument health and safety.

f. Collection, format organization, and distribution of an ancillary data stream for onboard use by the instrument and for transmission to the ground.

Components of the C&DHS are distributed throughout the EOS–AM Spacecraft as shown in the block diagram in Figure 6–1.

Control of most C&DHS functions is provided by redundant SCCs. These computers implement the MIL–STD–1750A instruction set architecture. SCC host firmware provides basic power–up functions (e.g., a bootstrap loader and initialization routines). The SCCs are nominally configured as one active and the other as cold–standby. The system can operate with both SCCs powered on for diagnostic operations. The active SCC's software provides a real–time Operating System (OS) kernel which supports the execution of application software. Almost all software is written in the Ada programming language.

The Bus Data Units (BDUs) are internally–redundant components whose function is to provide a standard set of command and telemetry interfaces to Spacecraft instruments. The BDUs implement the discrete instrument commands and gather analog and bi–level telemetry.

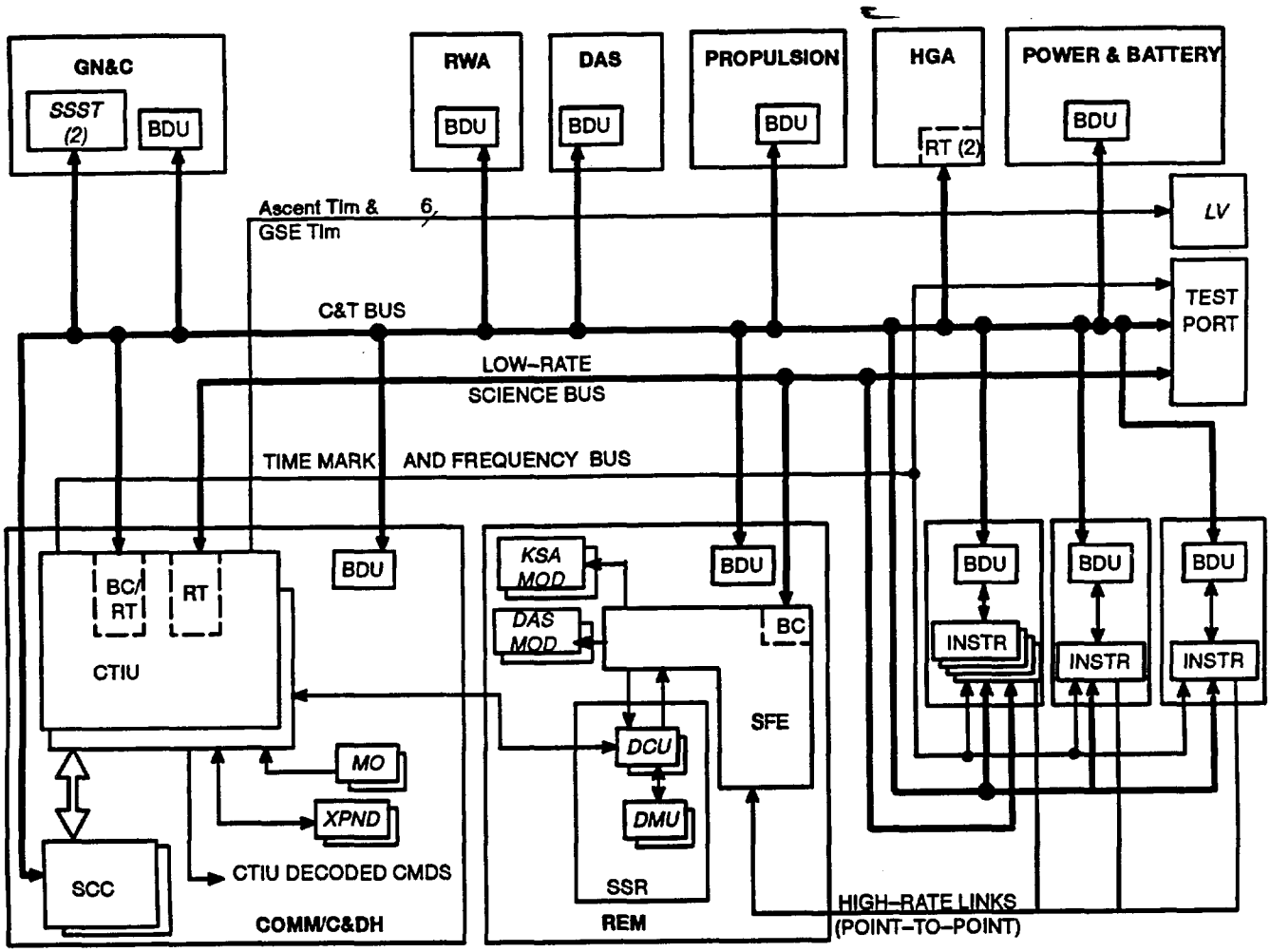

LEGEND

BC	= MIL-STD-1553B Bus Controller	*MO*	= Master Oscillator
BDU	= Bus Data Unit	*MOD*	= Modulator
C&T	= Command & Telemetry	*KSA*	= Ku-band Single Process
CTIU	= Command and Telemetry Interface Unit	REM	= Recorder Equipment Module
DAS	= Direct Access System (Comm)	RT	= MIL-STD-1553B Remote Terminal
DCU	= Data Control Unit	RWA	= Reaction Wheel Assembly
DMU	= Data Memory Unit	SCC	= Spacecraft Controls Computer
GN&C	= Guidance Navigation and Control	SFE	= Science Formatting Equipment
GSE	= Ground Support Equipment	SSR	= Solid State Recorder
HGA	= High Gain Antenna	SSST	= Solid State Star Tracker
H/K	= Housekeeping	TLM	= Telemetry
INSTR	= Instrument	*XPND*	= S-band Transponder
LV	= Launch Vehicle		

NOTE: *All busses are redundant*
Italics : Non-C&DHS Equipment
BOLD : Equipment Module

MIL-STD-1553B BUS

Indicates number of components

Figure 6-1. Command and Data Handling Subsystem Block Diagram

The Command and Telemetry Interface Unit (CTIU) is the central interface component for the C&DHS. In either the active or standby operational state, a CTIU interacts with the COMMS to receive uplinked commands data transfers. Only the active CTIU distributes uplinked command data transfers and gathers and packetizes normal housekeeping telemetry and health and safety telemetry for both the Spacecraft subsystems and instruments.

The active SCC communicates with the CTIU via a pair of dedicated serial links (RS–422) as well as the 1553B bus. The SCC–to–CTIU dedicated link is used to transfer SCC generated commands to the CTIU, and the CTIU–to–SCC dedicated link is used to transmit the normal housekeeping (16 kbps) telemetry and Spacecraft closed loop telemetry, which contains no instrument telemetry, to the SCC. SCC–generated commands, such as stored commands and those resulting from SCC functions, are dispatched by the CTIU to the designated Command and Telemetry (C&T) Remote Terminal (RT) via the MIL–STD–1553B C&T bus. The normal housekeeping data is used by monitoring functions within the SCC. The C&T bus is used by the CTIU to issue real time commands to the SCC and to gather SCC produced housekeeping telemetry. The CTIU also distributes health status from the active SCC for the autonomous hand-over of control to the Guidance, Navigation and Control Subsystem (GN&CS) in the event of a detected malfunction.

The SCC–based Flight Software Subsystem (FSWS) uses normal housekeeping telemetry to continuously monitor instruments and Spacecraft Bus subsystem health, and will autonomously respond to anomalous conditions using predefined command sequences called telemetry monitors (TMONS) to preserve Spacecraft safety and insure Spacecraft survival. In the event of a serious loss of C&DHS or SCC–based FSWS functionality, control autonomously is transferred to the Attitude Control Electronics (ACE) which will place the Spacecraft into safe mode which is a power and thermal safe attitude. During safe mode, in which the SCC is not functional, essential telemetry is supplied to the down link for ground evaluation, and real–time commands will be processed to achieve ground–commanded recovery.

A separate MIL–STD–1553B bus, the Low–Rate Science (LRS) bus, handles low–rate instrument science data. The Science Formatting Equipment (SFE) is the LRS Bus Controller (BC) on the LRS bus, while the instruments and the CTIUs are RTs. Dedicated point–to–point links carry high–rate instrument data to the SFE. The SFE generates formatted science data for the COMMS and Solid State Recorder (SSR), issuing both real–time and playback data.

Command Distribution Processing Flow

The command distribution processing flow is shown as a block diagram in Figure 6–2. It is also shown in transactional analysis form in Figure 6–3.

In nominal operations, both S–band transponder receivers and both CTIUs are continuously operating. Each CTIU has an interface with each S–band transponder. Each CTIU selects one of its two transponder interfaces to accept the uplink data for processing.

The uplink command data transfers utilize the Consultative Committee for Space Data Systems (CCSDS) telecommand format. This is described in further detail in Section 7.2.

Each CTIU has a unique Spacecraft Identification and a unique C&T address. A CTIU will verify the Spacecraft ID contained in the CCSDS transfer frame to determine if it should process the transfer frame further. Later, a CTIU will verify the C&T address and determine if this is a valid address. If it is valid, the CTIU will distribute it for delivery to the destination via the C&T bus, or execute it.

Command processing varies with type of command. Responsibilities are split between the CTIU and the SCC. Ground controller commands are processed whether or not the SCC is operational.

Commands can be real–time commands, stored commands or Failure Detection, Isolation and Recovery (FDIR) commands from the flight software. The active SCC flight software command sequence function processes and transmits the SCC commands to the active CTIU. This function utilizes a priority scheme to select commands to transfer to the CTIU for distribution. The SCC priority scheme assigns the highest priority to FDIR commands, the second highest priority to relative time command sequences (RTCS), and the lowest priority to stored absolute time commands (ATCs). Stored commands have an associated time tag. The Spacecraft will deliver a stored command within 1.024 seconds of time tag of the command or the initiation of the command. If the length of time the command has been waiting for transmission has exceeded the allowed time tolerance, its priority is adjusted to the highest transmission priority.

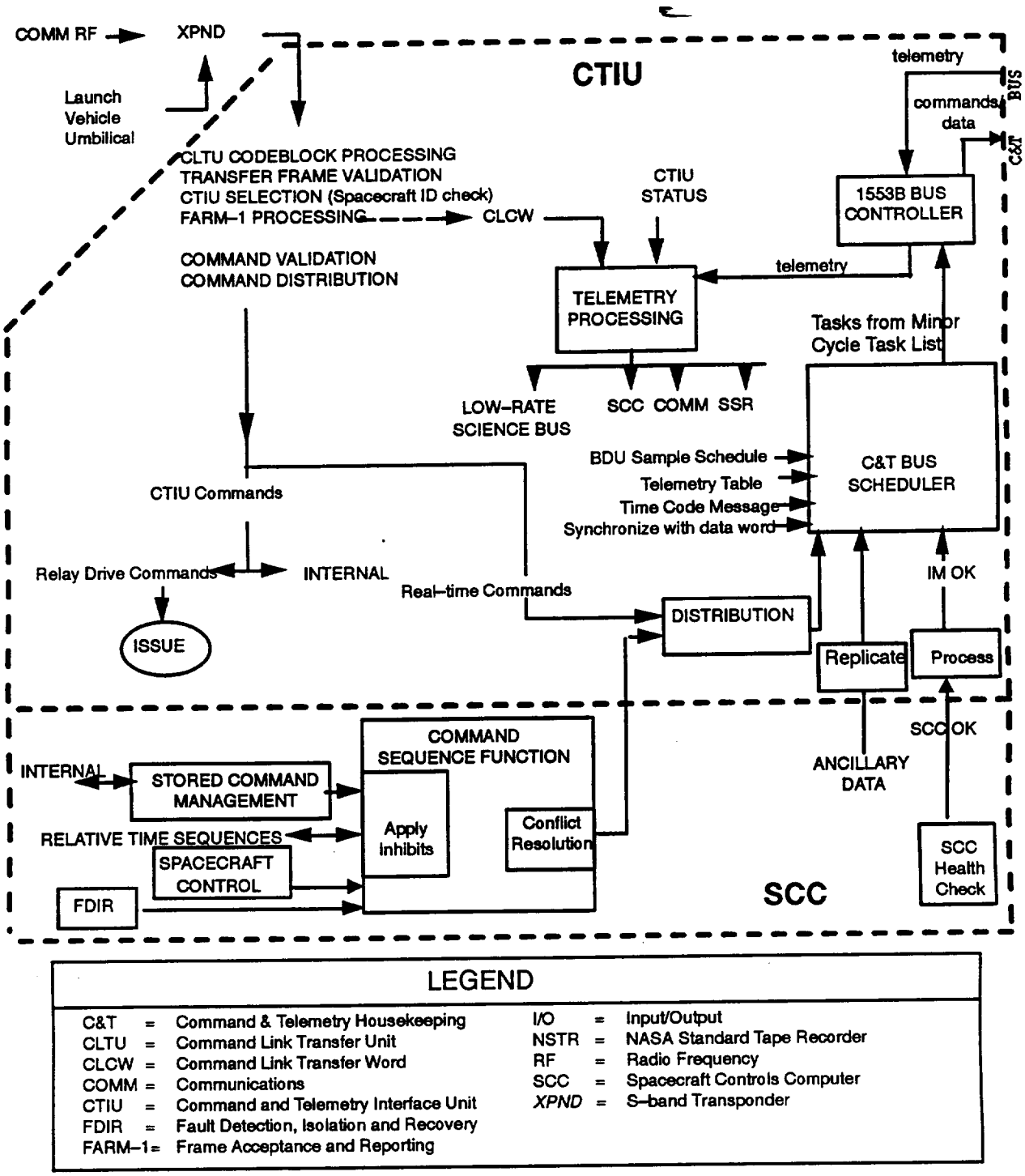

LEGEND					
C&T	=	Command & Telemetry Housekeeping	I/O	=	Input/Output
CLTU	=	Command Link Transfer Unit	NSTR	=	NASA Standard Tape Recorder
CLCW	=	Command Link Transfer Word	RF	=	Radio Frequency
COMM	=	Communications	SCC	=	Spacecraft Controls Computer
CTIU	=	Command and Telemetry Interface Unit	*XPND*	=	S-band Transponder
FDIR	=	Fault Detection, Isolation and Recovery			
FARM-1	=	Frame Acceptance and Reporting			

Figure 6–2. Command Distribution Processing Flow

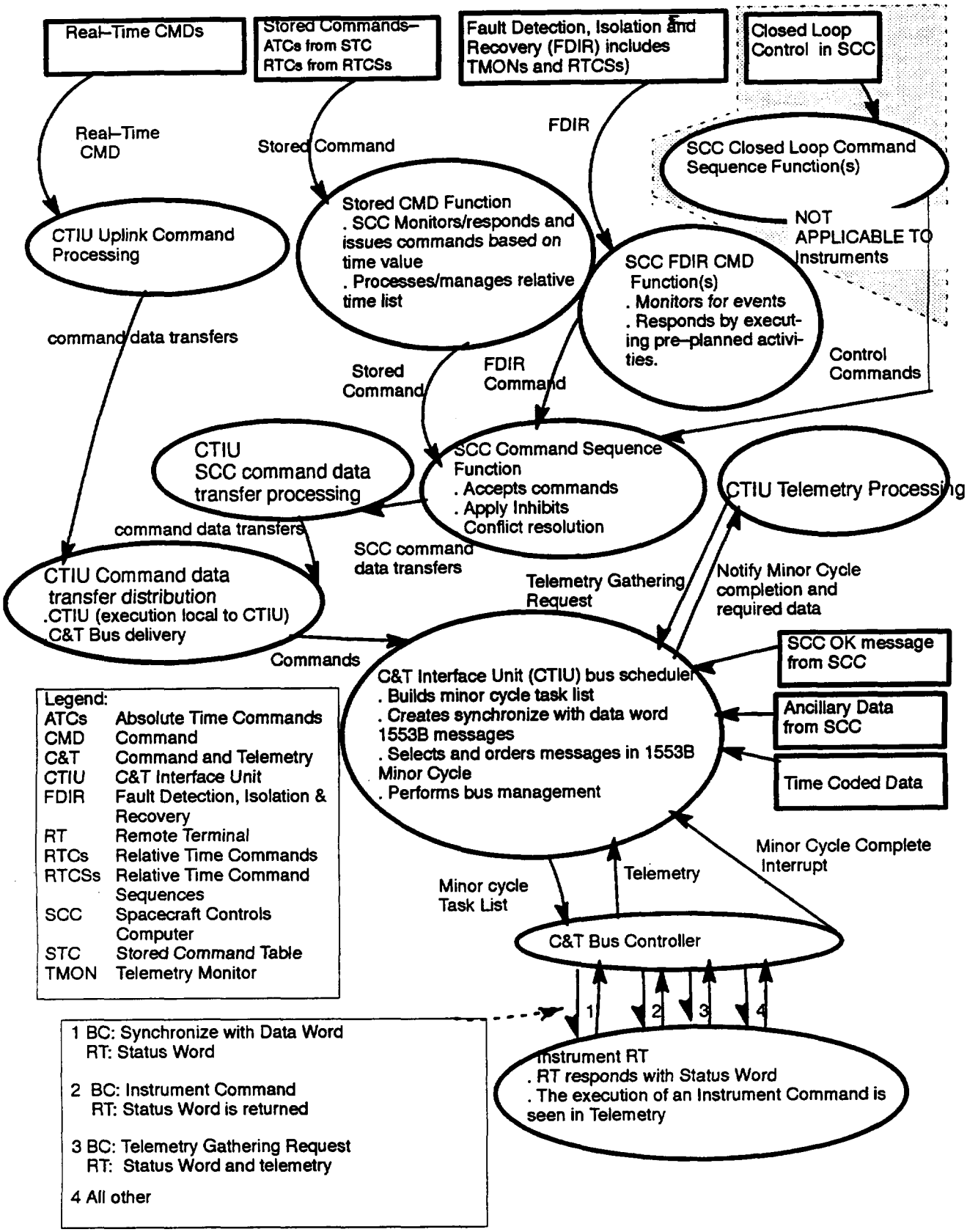

Figure 6–3. Transactional Analysis of Command Distribution Processing Flow

The active CTIU input/output (I/O) scheduler function prepares a series of 1553B messages containing minor cycle tasks for a particular minor cycle from tasks waiting to be sent. A minor cycle task can be a command to an instrument or Spacecraft subsystem, a telemetry or diagnostic data gather request, an IM OK indicator, ancillary data, a 1553B synchronize–with–data–word, etc. The I/O scheduler function collects the minor cycle tasks according to a pre–determined order and creates a task list. The task list is then passed to the BC which begins processing the list at the start of the next minor cycle.

Telemetry Processing Flow

The telemetry processing flow is shown in transactional analysis form in Figure 6–4.

Two down link data rates, 16 kbps (normal housekeeping telemetry) and 1 kbps (critical health and safety telemetry) are supported, the first for normal operations and the second for contingencies when the High Gain Antenna (HGA) link is not available. The normal housekeeping telemetry data will be recorded on a SSR, included in the LRS data stream, and sent to the SCC.

In defining the contents of the telemetry for downlink and for processing by the Flight Software (FSW), the following rules apply.

a. All critical health and safety telemetry will also appear in the normal housekeeping telemetry.

b. All normal housekeeping telemetry will be made available by the Spacecraft to the FSW for health and safety monitoring via the TMON function.

The instrument will be responsible for sampling its telemetry and buffering the data until it is gathered by the CTIU. The instrument telemetry will be sampled according to an instrument resident telemetry sampling schedule. The sampling will be for both the normal housekeeping and critical health and safety telemetry data streams. The instrument telemetry is required to be ready for bus transmission before the telemetry gather request is issued to the C&T RT.

The active CTIU will gather and distribute telemetry. The active CTIU supports BDU telemetry sampling by transmitting BDU sample schedule tables according to the bus utilization table. The receipt of a BDU sample schedule table causes the BDU to sample the specified telemetry in the same minor cycle the BDU received it. The CTIU gathers the BDU sampled data in a subsequent minor cycle.

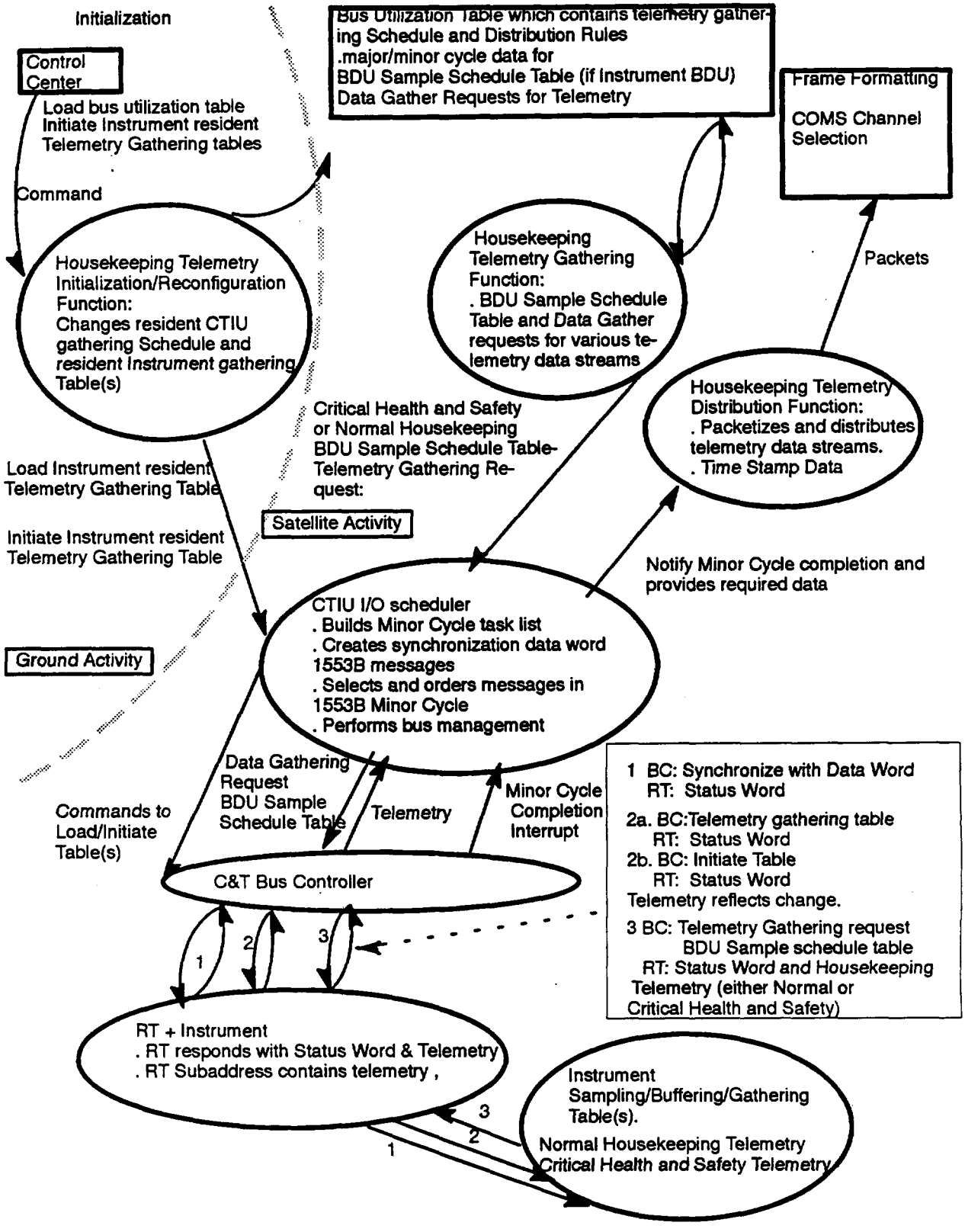

Figure 6–4. Transactional Analysis of Instrument Telemetry Processing Flow

The active CTIU will be responsible for gathering data from each C&T RT, the active SCC, and the standby CTIU in accordance with the bus utilization table. Instruments will utilize one or more resident sampling schedule tables for sampling local telemetry. This table identifies the major/minor cycle in which data is sampled and that in which data is gathered and its disposition (i.e., normal housekeeping telemetry data and/or critical health and safety telemetry data). Instruments will store the sampled data in the appropriate C&T RT subaddresses. Each subaddress represents a specific telemetry data stream.

The gathered information is assembled into CCSDS packets which are identified by the minor frame number during which each of them was gathered and a time stamp. The Instrument telemetry will be stored at pre–defined positions within specific packets. The ground telemetry decomposition function will use the pre–defined positions to identify the instrument telemetry. The CTIU supplies C&T bus communication status by C&T RT in telemetry to trend the C&T bus status and to determine if the telemetry data is valid.

6.1 Command and Telemetry Bus

6.1.1 Command and Telemetry Bus Configuration

The active CTIU acts as the C&T BC, while a CTIU in standby operational state acts as a C&T Remote Terminal (RT); all other C&T bus nodes are configured as RTs, including the SCCs. The C&T bus, which is the onboard communication link between the CTIUs, instrument and Spacecraft BDUs, and instrument RTs, is a redundant serial data bus. All C&T RTs are required to receive messages on either bus all the time. The C&T bus complies with the MIL–STD–1553B command and response protocol, which supports single and multiword data transfers. Figure 6–1 includes the C&T Bus configuration. Refer to MIL–HDBK–1553 for detailed guidance on system, hardware, and software design.

6.1.1.1 Command and Telemetry Bus Transfer Method

MIL–STD–1553B is a serial data bus based on message transmission which contains from 1 to 32 16–bit data words. There are 10 information transfer formats (i.e., message types). Each message format contains control words called command and status. The message formats are subdivided into two groups: 1) information transfer formats and 2) broadcast information transfer formats. The EOS data system will only use the information transfer formats shown in Figure 6–5. The information transfer formats require that all error free messages received by a RT be followed by the transmission of a RT status word. This validates error free message completion.

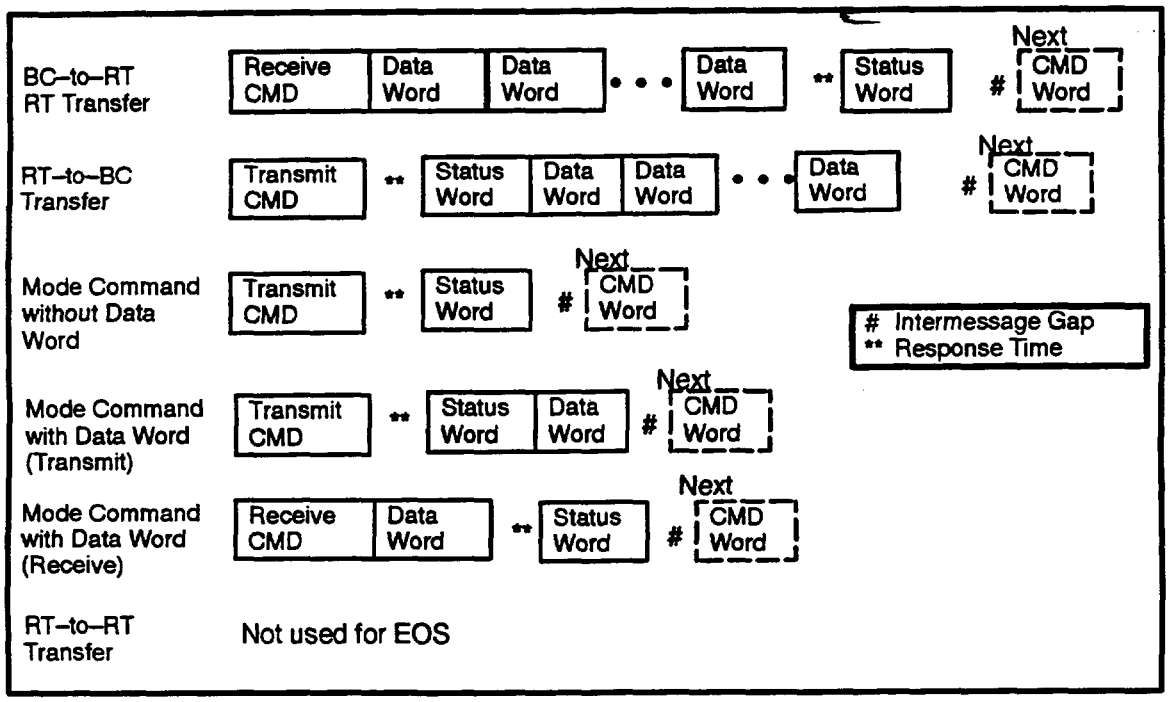

Figure 6–5. 1553B Information Transfer Formats

In Figure 6–5, multiple 1553B commands are separated by a minimum Intermessage Gap of 4.0 microseconds. The BC will comply with this standard. The RT response time to a command is also specified in the standard, and its value is between 4.0 and 12.0 microseconds. The GIIS requires instrument compliance with the standard.

Messages to the RTs from the BC are issued using a command word containing the RT's address, direction of data (i.e., transmit or receive) and the word count. The command word provides the definition of the message format to be transmitted and can only be transmitted by the BC.

Each word consists of 16 bits of data, a synchronization pattern which cannot be duplicated by data and a parity bit, for a total of 20 bits. The word types and their formats are shown in Figure 6–6. The command word and status word use the same synchronization pattern. The data word uses the inverse for a synchronization pattern.

The data fields of the command word are, from left to right:

a. RT Address which is a unique address.

b. Transmit/Receive Bit – If the direction of the message bit is set to receive, the word count field will reflect the number of data words following the command word. If the direction of the message bit is set to transmit, the word count field will reflect the number of data words following the status word returned by the RT.

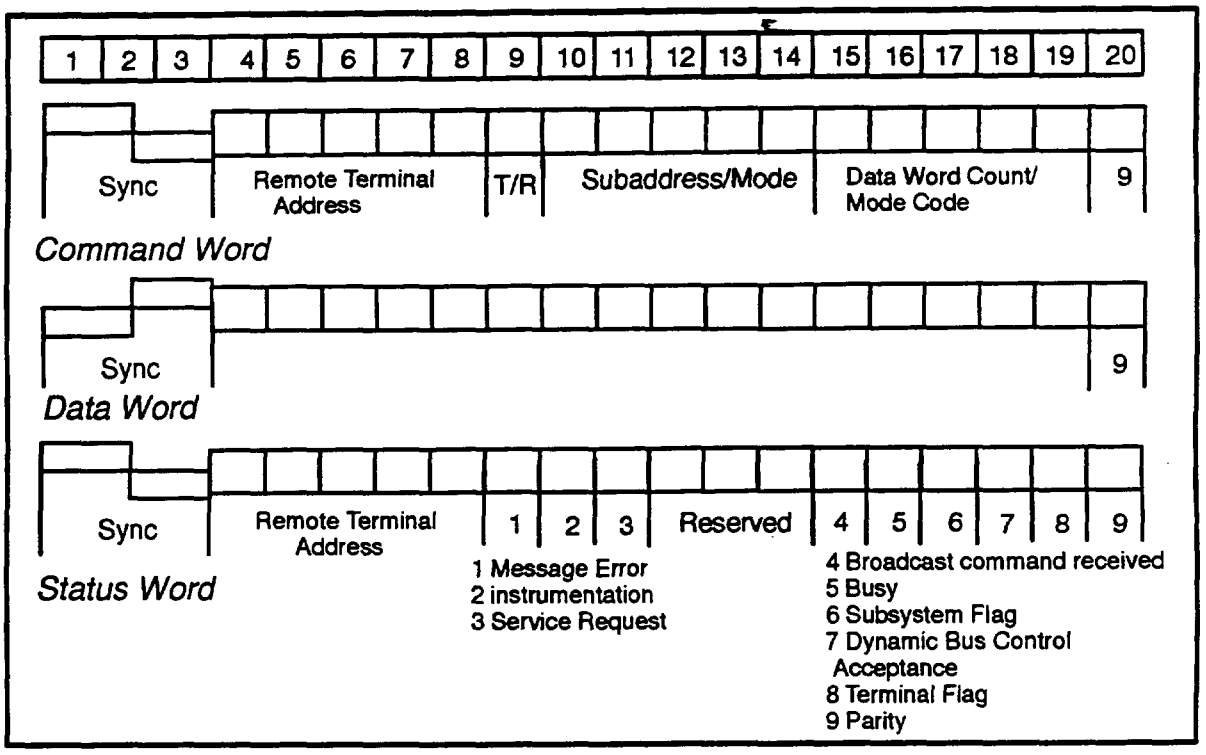

Figure 6–6. 1553B Word Formats

c. Subaddress – This field identifies an internal address which points to the data storage area.

d. Data Word Count – This represents the number of data words in the message.

No restrictions are placed on the encoding of the data field, except that the most significant bit will be transmitted first. The parity is odd and is established on the 16 bits of data plus the parity bit.

As part of the 1553B protocol, RTs reply to a minor cycle task message with a status word. The RT address is placed in the transmitted status word for two reasons: (1) the BC can validate the status word and (2) the other terminals will not misinterpret the status word as a command word.

Communication Failures

Failures which affect communication may either be caused by the instrument host, the 1553B devices, or the bus itself. It is conceivable that internal instrument communication failures are not detectable by the BC. In this case, alternative means of reporting status to the ground is necessary. This may be accomplished by using instrument BDU commands to reconfigure and isolate instrument failures. Instrument fault tolerance design may assume that the BDU commands will be available for reconfiguration.

Failures within the instrument RT are identified and managed within the standard 1553B protocol involving the status word and various mode code commands. The instrument should design the interface such that a single failure of either an RT or power supply will not cause total, permanent, communication loss with the BC. The BC will automatically attempt communication via the other bus. A suggested cross–strap configuration to support this process is covered in Figure 5–12.

If communications cannot be maintained with an instrument in spite of contingency procedures (i.e., command retries, redundant bus access, etc.), the synchronize–with–data–word commands will continue to be sent four times each major cycle, every 256 milliseconds, and RT status response monitored for a return to normal condition. The active CTIU always telemeters RT communication status. If communications are not restored, diagnosis and resolution will be the responsibility of ground control. This relies on ground commanding, which will be interleaved with normal commanding to other RTs.

Commanding to the remaining operational RTs continues. This applies to instruments as well as Spacecraft subsystems. The Spacecraft will be designed such that failure to command one RT will not result in damage if subsequent commands to other RTs are issued. An additional feature which may be useful in this situation is the stored command inhibit field. The command inhibit field may be useful in adjusting flight operations to compensate for problems onboard which were not anticipated in the stored command table.

1553B Communication Failure Response

Failure reaction is the same for all operating modes. Types of failures are:

a. No Status Word returned

b. Message Error Bit set in returned status word

c. C&T RT response to a C&T BC message it received fails C&T BC validation checks, etc.

CTIU Response To Failure

The BC re–transmits the message either if the message error bit is set in the returned status word, or if no status word is returned within a predetermined amount of time, or the RT response fails C&T BC validation checks. MIL–STD–1553B states that the minimum BC wait time for an RT response to a command is 14 microseconds (EOS wait time is **TBD**). If a

response is not received within the pre–determined amount of time, the BC will retransmit the command on the redundant (alternate) bus. The following summarizes the communication error management process:

a. A retry on the redundant Bus is normally attempted.

b. If unsuccessful, a message error notification is sent to the SCC and also placed in the telemetry. The next message already queued for this minor cycle for the RT is attempted and the sequence repeats.

c The CTIU moves on to the next item in the minor cycle list. This ensures the system keeps running when an instrument RT fails, is turned off, or not present during Integration and Test (I&T).

d. All message retransmission and bus switches will be completed before the end of the minor cycle in which the error occurred.

Subsequent messages scheduled for the RT (e.g. real–time commands or telemetry requests) will be sent.

The Spacecraft is required to transmit a maximum of one 1553B message to a RT subaddress for a RT during any one minor cycle; however, there can be a possible single retransmission of that message by the C&T BC if it detects anomalies. The instrument must allow for a retransmission of a valid 1553B message. The C&T BC begins to retransmit a message within 20 microseconds after the first–time message transmission ended. The retransmission will begin to overwrite the first message retransmission within the RT subaddress storage area in less than 100 microseconds. Thus, the instrument would never know the same 1553B message was issued twice by the C&T BC unless the instrument was interrupted each time a message was stored in that RT subaddress. With regard to synchronize–with–data–word, two interrupts may be issued to the instrument host, depending upon protocol chip implementation.

6.1.1.1.1 Command and Telemetry Bus MIL–STD–1553B Mode Code Utilization

Mode code commands are used for 1553B communications management. For further definition of mode codes and the RT responsibilities, refer to MIL–STD–1553B, Section 4.3.3.5.1.7, and MIL–HDBK–1553, Section 70. Mode codes not used are considered invalid.

The synchronize–with–data–word mode code is the only 1553B message the instrument host must respond to during a minor cycle. This 1553B command is used to synchronize the instrument cycles with the Spacecraft cycles. The instrument should resolve differences between received and expected cycle counts by automatically re–synchronizing with the major and minor cycle counts included with the synchronize–with–data–word mode code and report the event in their telemetry. Such differences would occur during initialization and may occur if the active CTIU fails.

Although some of the other mode codes affect instrument host communication (e.g., transmitter shutdown), these commands need not cause specific reactions by the instrument host. One reason for this is that failure or shutdown of one RT will automatically result in communication with the other RT. Another reason is that failure of both RTs should result in the instrument entering safe mode automatically because the SCC OK (IM OK) message will be absent for 5 seconds.

The inhibit and override inhibit terminal flag bit mode codes will be used in support of ground operations. Ground controllers may elect to inhibit the terminal flag bit if they wish to suspend autonomous functions keyed to this bit. The flight system does not plan to make use of the terminal flag bit.

6.1.1.1.2 Command and Telemetry Data Transfers

All data transferred over the bus will be accomplished through the 1553B information transfers described earlier and depicted in Figure 6–5.

6.1.1.1.2.1 Data Transfers to the Instrument

Instrument Embedded RT Transactions

Instrument commands are transported within a 1553B message whose structure is presented in Figure 6–7. The 1553B command word and the 1553B data words form a single 1553B message. The maximum length for a ground–controller–issued message is 32 data words (516 bits), plus the 1553B command word (16 bits) for a total of 528 bits or 33 16–bit words. The message may contain an instrument memory load transfer. See Figure 6–6 for BC–to–RT data transfer. The minimum sized message require the 1553B message and at least one data word. Absolute time commands, relative time commands, memory load initiate, memory dump initiate and ancillary data messages are described in Section 7.

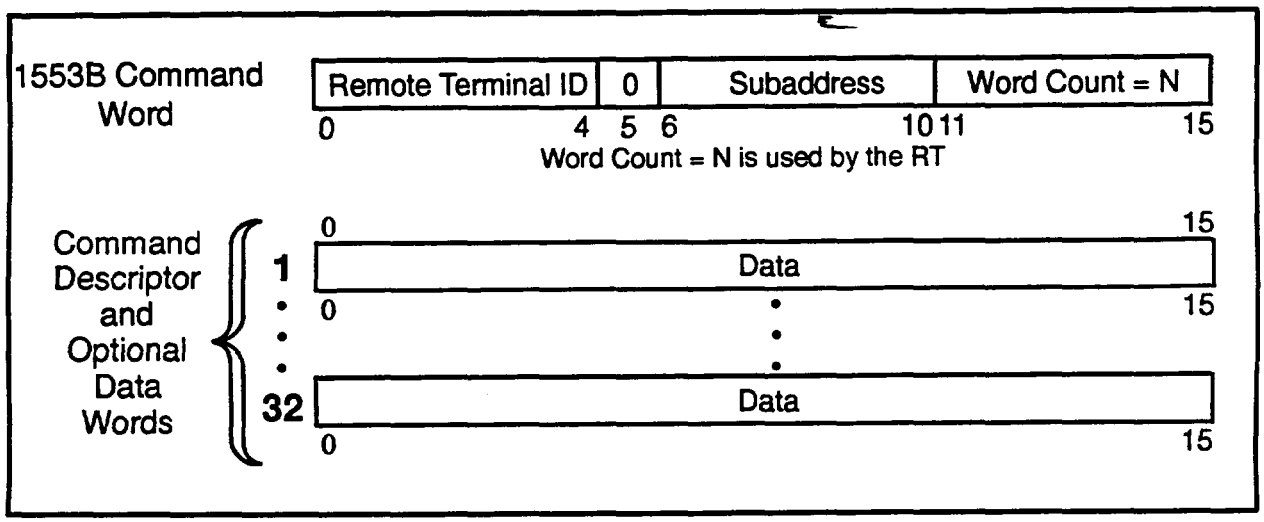

Figure 6–7. 1553B Ground Message Structure

Instrument BDU Transactions

The BDU 1553B command message will conform to MIL–STD–1553B message protocol. The remote terminal address will be the C&T RT address for that BDU. Its subaddress will be 1. The BDU command message can be used to command instruments via relay pulse standard command interfaces. The BDU will accept 1 data word for relay pulse commands. The data word will be the Command Descriptor. The Command Descriptor is shown in Figure 6–8.

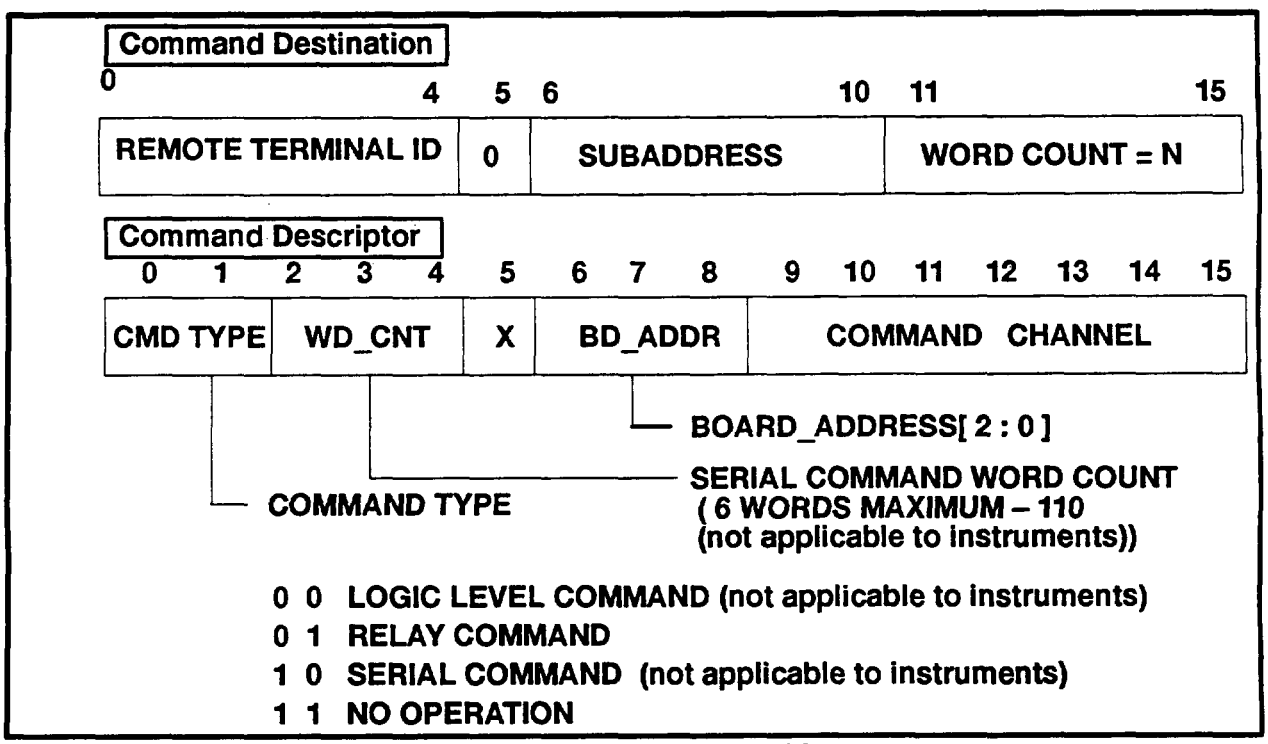

Figure 6–8. BDU Command Message

6.1.1.1.2.2 Data Transfers from the Instrument

Instrument Embedded RT Transactions

Telemetry is transmitted from the instrument RT to the BC as a sequence of 1553B data words headed by the status word. Data transfers from an instrument will vary from 1 to 32 1553B data words. A normal housekeeping telemetry gather message will be 32 data words. A critical health and safety gather response will be 1 data word. The number of data words to transfer is provided to the RT by the 1553B transmit command containing the telemetry gathering request. See Figure 6–5 for RT–to–BC data transfer.

Instrument BDU Transactions

A BDU will sample data in the same minor cycle it receives a BDU sample schedule table from the CTIU. The active CTIU uses the bus utilization table to determine when the BDU sample schedule table is sent. The soonest the sampled data can be gathered is the next minor cycle following the sampling.

6.1.1.1.3 Broadcast Mode on the Command and Telemetry Bus

Broadcast mode is prohibited because the RTs can not return a status word confirming they received the broadcast.

6.1.2 Command and Telemetry Bus Transfer Timing

Utilization of the 1553B bus is rigidly structured in accordance with pre–defined message type allocations. The entire data system timing is depicted in Figure 6–9. The minor cycles and the minor cycle tasks are defined in Figure 6–10 and Table 6–1.

Within each minor cycle, five message types are allocated specific tasks. Message types within a minor cycle only indicate relative order; they do not represent reserved time periods within a minor cycle. For instance, if no telemetry is to be gathered during this message type allocation, message type allocation 4 effectively disappears. All minor cycle tasks for a particular minor cycle are issued as quickly as the BC and RT can handle them, and the time for each task varies with 1553B message length. It should be noted that 1553B messages may be issued to different RTs within the same minor cycle. For an example, a synchronize–with–data–word may be issued to RT 1, followed by a telemetry request issued to RT 5.

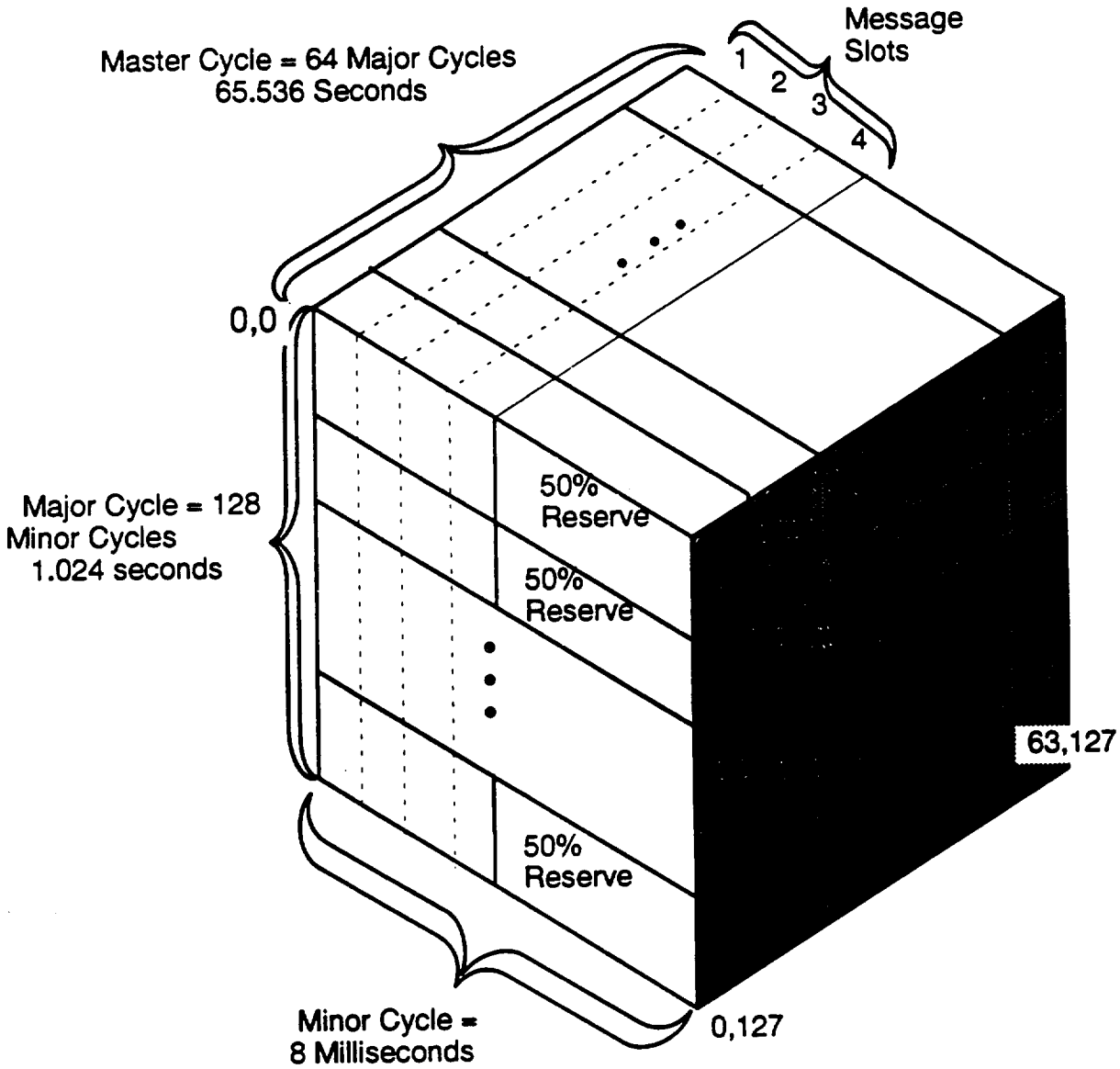

Figure 6–9. Data System Cycle Timing

Implies order within a minor cycle

1 Major Cycle

Minor Cycle Number	Type #1	Type #2		Type #3		Type #4		Type #5	Reserve Bus Utilization
0	1	2	2	3	3	4	4	6	>50%
1	1	2	2	3	3	4	5	6	
2	1	2	2	3	3	4	4	6	
3	1	2	2	9	—	4	4	6	
4	1	2	2	3	3	4	4	6	
5	1	2	2	3	3	4	4	6	
. . .	. . .	. . .	. . .	. . .	. . .	. . .	. . .	. . .	
32	1	2	2	3	3	4	4	7	
33	1	2	2	3	3	4	5	7	
. . .	. . .	. . .	. . .	. . .	. . .	. . .	. . .	. . .	
64	1	2	2	3	3	4	4	8	
65	1	2	2	3	3	4	4	8	
. . .	. . .	. . .	. . .	. . .	. . .	. . .	. . .	. . .	
96	1	2	2	3	3	4	4	.	
97	1	2	2	3	3	4	4	.	
. . .	. . .	. . .	. . .	. . .	. . .	. . .	. . .	. . .	
126	1	2	2	3	3	4	4	.	
127	1	2	2	9	—	4	4	.	

***NOTE: Types are not meant to show timing, only relative order!**
minor cycle = 8 msec,
major cycle =128 minor cycles
master cycle = 64 major cycles

Minor Cycle Tasks

1. Synchronize with Data Word.
2. BDU sample schedule
3. All onboard issued commands. In 4 minor cycles, 1–3 can contain up to 2 onboard commands while the 4th minor can contain only 1 ground controller command
4. Gathering request for H&S telemetry, H/K telemetry and SCC closed loop data.
5. Diagnostic – Memory Dump. Minimum interval between gathers is 6 minor cycles. Note: A C&T bus loop back will use this task type upon command to the CTIU as long as there is no on–going memory dump.
6. IMOK message.
7. Ancillary Data.
8. Time Code.
9. Ground Controller Commanding: 1 command every 4 minor cycles

Figure 6–10. Major Cycle Task Scheduling

TABLE 6–1. Minor Cycle Tasks and Frequency of Occurrence

Message Type Number	Minor Cycle Tasks	Number of transactions allowed within a minor cycle for this type of task
1	Synchronize with data word	0 or 1
2	BDU sample schedule table	0, 1, or 2
3	Command: only one of the following types of task in any minor cycle task list	
	On–board commands every 3 out of 4 minor cycles	0, 1 or 2
	uplink command data transfer 1 out of 4 minor cycles	0 or 1
4	data gathering request: only one of the following type of tasks in any minor cycle task list	
	no sooner than every sixth minor cycle (for 16 kbps downlink) and no later than once every 128 minor cycles (for 1 kbps downlink): dump gather request telemetry gather request	 0 or 1 0 or 1
	all other minor cycles: telemetry gather request	0, 1 or 2
5	Miscellaneous: only one of the following types of tasks in any minor cycle task list: ref. paragraph 6.1.2.4.6 of the GIIS, GSFC 420–03–02	
	Ancillary data packet	0 or 1
	Time Code Message	
	IMOK message	

6.1.2.1 Minor Cycle Length

The minor cycle timing (8 milliseconds ±100 microseconds per minor cycle) is strictly maintained. Minor cycle synchronization between an instrument and the Spacecraft is accomplished by periodically transmitting a MIL–STD–1553B synchronize–with–data–word.

6.1.2.1.1 Minor Cycle Task List

The CTIU includes an I/O Scheduler function. The I/O scheduler gathers the minor cycle tasks according to a pre–determined order from waiting tasks and creates a task list according to the bus utilization table. The task list is then passed to the BC which begins processing the list at the start of the next minor cycle. The tasks are processed sequentially without waiting between tasks. Processing ends upon reaching the end of the list. The order of the minor cycle tasks within the task list is pre–planned and the bus utilization table concept is shown in both Figure 6–10 and Table 6–1.

Tasks have been allocated to specific minor cycles, thereby simplifying system timing and coordination as well as distributing traffic across the bus. Table 6–1 shows the Minor Cycle Tasks and frequency of occurrence within a single minor cycle.

The message type is used for a variety of items that are required, at most, once per major cycle. At most, only one 1553B message will be issued in this task slot in any one minor cycle task list.

6.1.2.1.2 Minor Cycle Task List Completion

The BC will notify the CTIU when it has completely processed this minor cycle's task list. A minor cycle task list is to be completed within a limited amount of time (7.2 milliseconds). Each minor cycle task list in the bus utilization table is designed to be completed within its allotted time where each task (1553B message) in the list could have a possible retry. If a minor cycle is completed in less than 7.2 milliseconds, the BC will wait until the next minor cycle to process the subsequent minor cycle task list.

6.1.2.2 Major Cycle Length

The major cycle relationship between the master cycle and minor cycle is depicted in Figure 6–9. The time interval of a major frame is 1.024 seconds and contains 128 minor cycles.

6.1.2.3 Master Cycle Length

The master cycle contains 64 major cycles and its time interval is 65.536 seconds. Every telemetry point will be sampled at least once during a master cycle.

6.1.2.4 Command and Telemetry Bus Task Scheduling

The overall 1553B bus utilization table concept has been described Section 6.1.2. The maximum number of 1553B messages to an instrument in one minor cycle is 4. They are as follows:

a. Synchronize–with–data–word.

b. One of the following categories of instrument commands: real time (including memory loads), stored,Telemetry Monitoring (TMON), a safe mode command or other FDIR command.

c. Normal housekeeping or critical health and safety telemetry gather requests.

d. One of the following: IM OK, ancillary, or time code.

6.1.2.4.1 Synchronize with Data Word

The synchronization with the active CTIU cycles permits the C&DHS to provide services exhibiting a deterministically bounded timing performance. The active CTIU cycles are the minor cycle which is 8 milliseconds; the major cycle which consists of 128 minor cycles totaling 1.024 seconds; and the master cycle which consists of 64 major cycle totaling 65.536 seconds. The bus utilization table is based on the CTIUs internal cycles and contains all CTIU resident schedules.

The synchronize–with–data–word message is correlated to the assigned C&T RT address. If a C&T RT has an RT address of 8, it will receive its first synchronize–with–data–word message in minor cycle 8 and every 32 minor cycles there after.

All C&T RTs are required to maintain cycle synchronization with the active CTIU. This is accomplished via the synchronize–with–data–word. The instrument is expected to maintain the major and minor cycle counts in between synchronize–with–data–word messages. Figure 6–11 depicts the synchronize–with–data–word usage. It is recommended that the RT interrupt the instrument upon receipt and validation of this command to permit processing to begin upon receipt. The instrument responds to this interrupt but has to allow for an additional interrupt if a retransmission occurs.

6.1.2.4.1.1 Synchronize with Data Word Transfer Frequency

A synchronize–with–data–word message once every 32 minor cycles is part of the bus utilization table. The synchronize–with–data–word message is correlated to the assigned C&T RT address. If a C&T RT has an RT address of 8, it will receive its first synchronize–with–data–word message in minor cycle 8 of any major cycle and every 32 minor cycles (256 milliseconds) thereafter.

6.1.2.4.1.2 Synchronize with Data Word Transfer Timing

The synchronize–with–data–word command will be the first command issued at the start of a minor cycle to minimize distribution time variance. The time will vary no more than ± 100 microseconds from the beginning of the minor cycle, even with retry. The instrument is expected to handle a possible retransmission of this message.

6.1.2.4.1.3 Data Word Content

The 1553B synchronize–with–data–word mode command will contain contain the major and minor cycle number. The major cycle number (most significant byte) and minor cycle number (least significant byte) will appear in this mode command's associated data word.

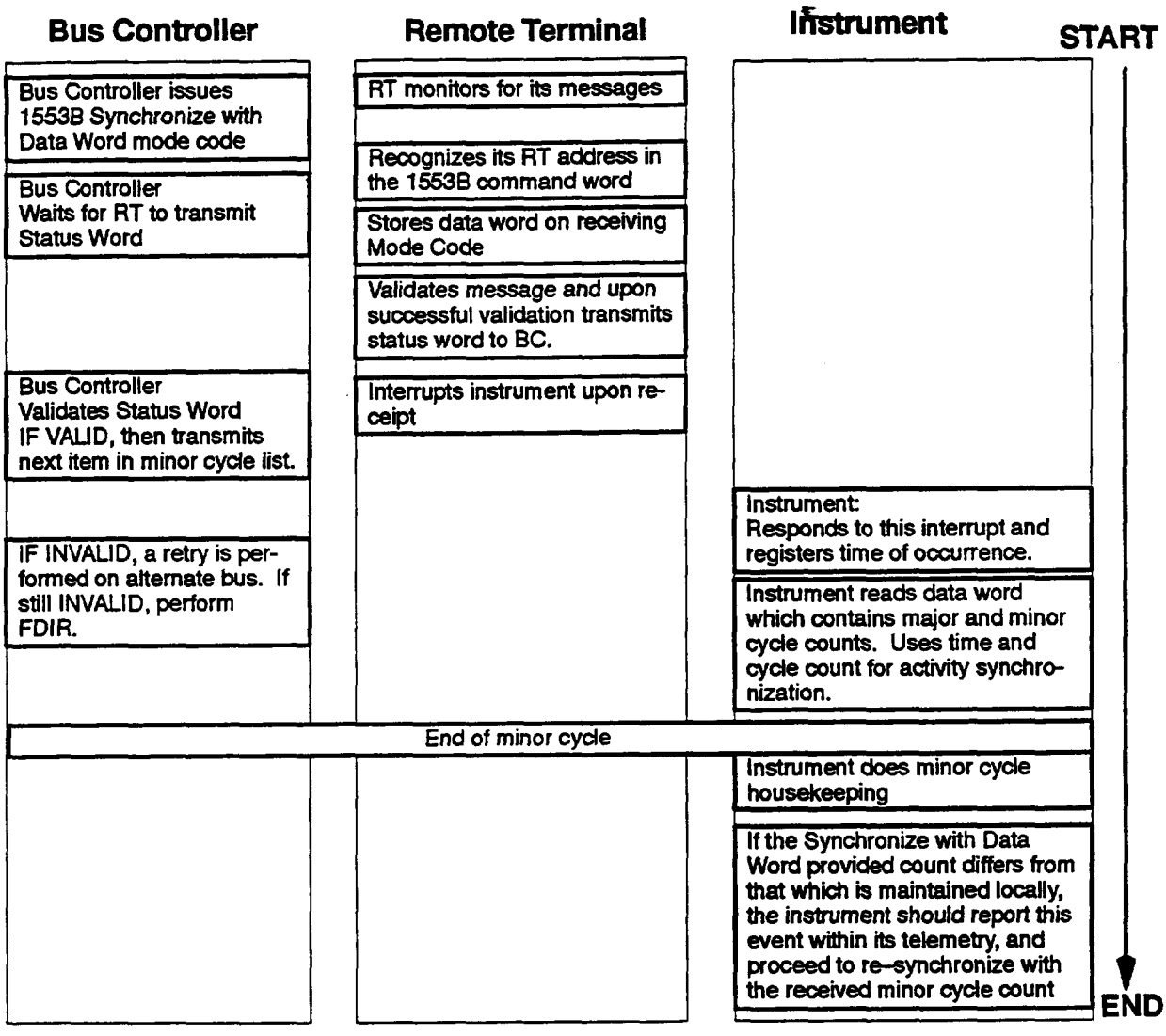

Figure 6–11. Synchronize–with–Data–Word

6.1.2.4.1.4 Data Word Content Format

Requirements for the data word content format associated with the synchronize–with–data–word message are shown in Figure 6–1 of the GIIS.

6.1.2.4.1.5 Instrument Response to Data Word

Principal instrument activities driven by this synchronization command are sampling and staging telemetry for gathering by the BC. It is envisioned that the command would activate a logic sequence culminating with RT data exchange, or be used to verify synchronization. The major and minor cycle counts within the data word are used by the instrument to verify its own internal major and minor cycle counts, as well as set its 1553B timing as appropriate.

The instrument is expected to reset its internal counts to the supplied counts if there is a difference between the locally maintained major and minor cycle counts and those in the message, as well as proceed to re–synchronize with the received cycle counts. While in the process of re–synchronizing, the instrument's telemetry output buffer may not contain valid data. If reporting the event in telemetry is not sufficient, the Instrument Provider should reach agreement with the Spacecraft Provider to determine what else could be done, such as setting certain bits in the RT status word, or ignoring all message traffic until the RT receives its next synchronize–with–data–word.

The re–synchronizing to the active CTIU cycles may be caused by CTIU power–up/reset, or instrument power–up/reset. The re–synchronizing to the active CTIUs cycles does not imply an adjustment to the instrument clock.

6.1.2.4.1.6 Instrument Telemetry Transfer Schedule

Each block of instrument data must be capable of being decomposed by both the onboard computer and ground control. Therefore, the instrument is expected to supply the necessary algorithms to perform the decomposition.

6.1.2.4.2 Command Transfers

Figure 6–12 portrays the command delivery process within a minor cycle of the 1553B bus. The instrument must be able to accept 1553B messages on demand, in accordance with the bus utilization scheme depicted in Figure 6–10. The BC issues a message to a C&T RT containing an instrument command or a 1553B mode command. The RT accepts and validates the message and responds with a status word. This repeats for all messages to be delivered in this minor cycle. In the scheme presented here, the RT takes no overt action toward the instrument, but saves the received messages in pre–designated areas in accordance with subaddress. The instrument, at the end of each minor cycle, polls status information associated with message receipt and reads the commands as received. Depending upon the command, the instrument takes appropriate action.

An alternative scheme is for the RT to interrupt the instrument upon command receipt, allowing immediate action by the instrument. This approach is not recommended because the BC may re–transmit the command if an anomaly is detected. This causes an additional interrupt and extra processing.

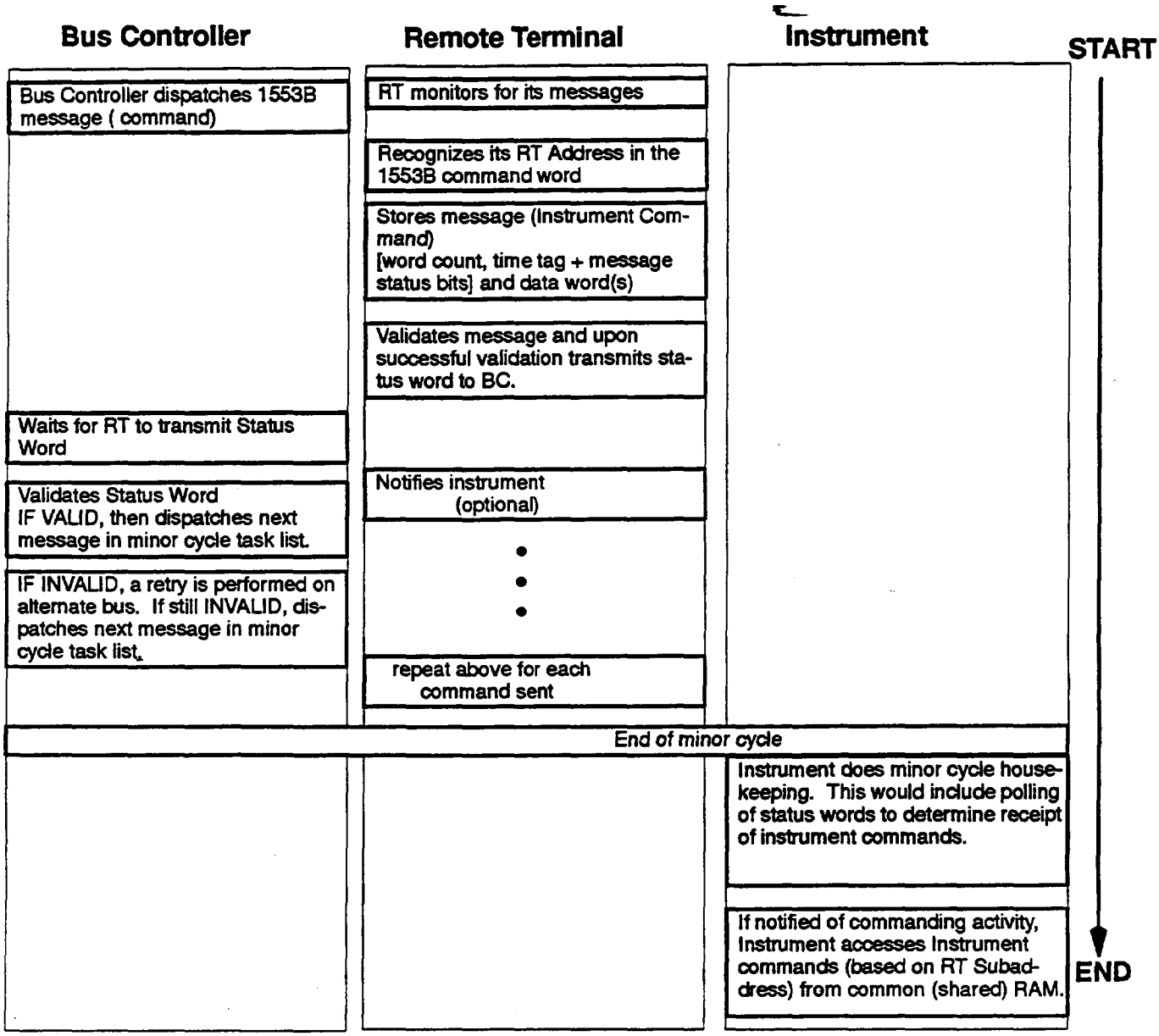

Figure 6–12. Command to Attached Device

The Spacecraft subsystems, using embedded RTs, are generating an interrupt only if the message contains a synchronize–with–data–word since this data needs to be processed upon receipt. All other messages received in minor cycle N are not processed until minor cycle N+1 begins. The design permits any possible message to be received in minor cycle N+1.

6.1.2.4.3 Housekeeping Telemetry Transfers

Embedded RT Telemetry Gathering

Figure 6–13 portrays the telemetry gathering process between the Spacecraft and the instrument in a minor cycle. The sequence begins with the instrument sampling and storing telemetry in accordance with instrument internal schedule(s). These schedules will be defined by the instrument and implemented at the instrument's discretion. The implementation may be a table–driven schedule or special purpose logic. This data is written to the proper subaddress area in anticipation of a read request from the BC. Upon receipt and validation of the telemetry data gather request, the RT transfers the data to the

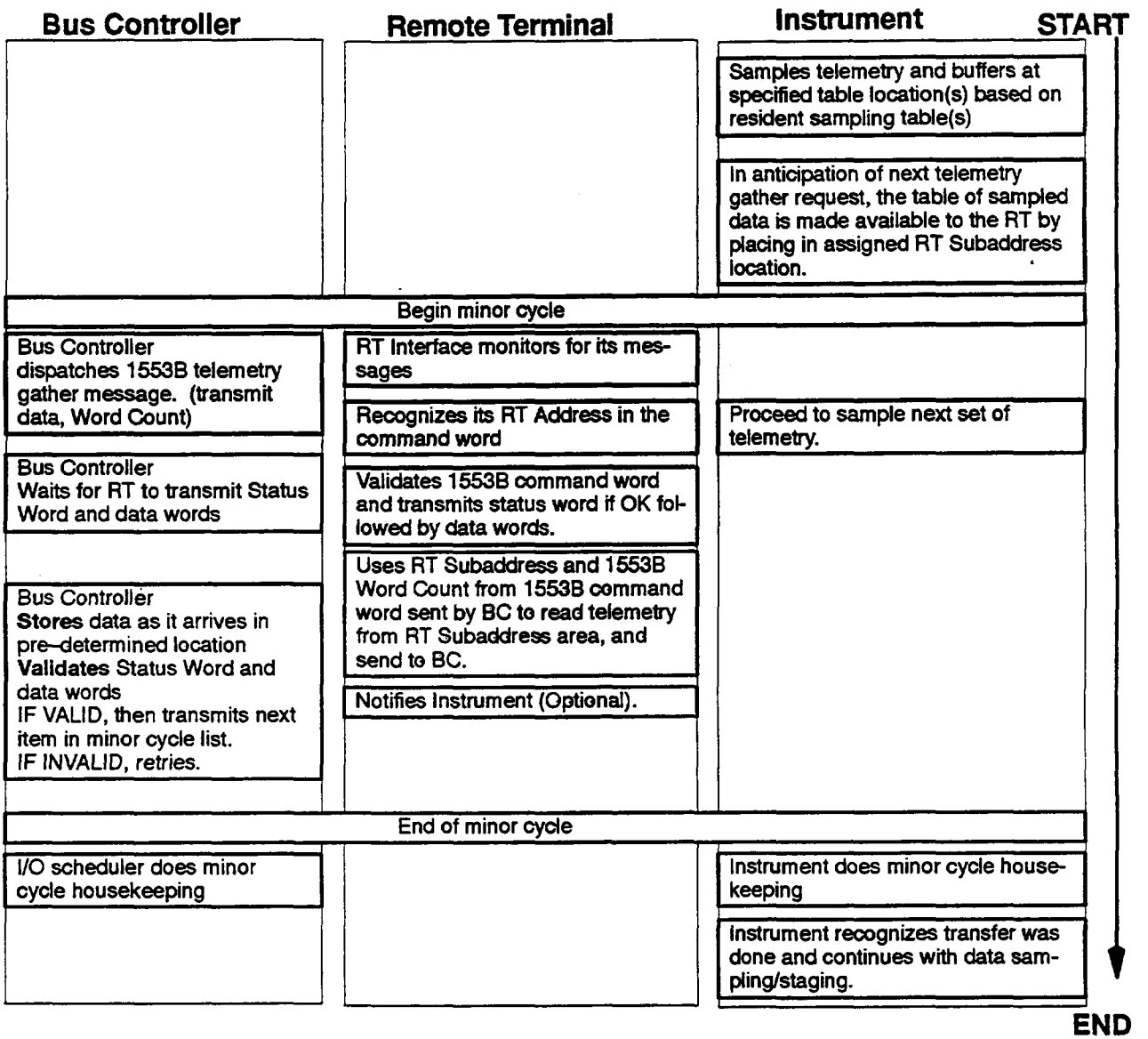

Figure 6–13. Telemetry Gathering from Instrument

BC. Each category of housekeeping telemetry (i.e., normal and critical) will be gathered individually by the BC using different minor cycles. The instrument may proceed to sample the next data set independently of the data gathered, but must guard against overwriting data prior to retrieval by the BC.

The telemetry data sampled by the instrument is written to the proper RT subaddress area in anticipation of a data gathering request (i.e.,1553B transmit command) transmitted by the BC to the instrument RT.

An example of the sequence is:

a. Synchronize–with–data–word mode code is received by this RT.

b. Data is sampled by the instrument within the next 96 milliseconds (12 minor cycles) per the resident sampling schedules.

c. The sampled data is stored in the critical health and safety telemetry buffer and in the normal housekeeping telemetry buffer per the resident sampling schedule(s).

d. The sampled data remains undisturbed for the rest of the major cycle.

e. The data gather request is received by the instrument RT and causes the stored data in the specified RT subaddress (normal housekeeping or critical health and safety) to be transmitted to the C&T BC.

It is strongly recommended that the instrument resident housekeeping sampling schedules for the normal housekeeping telemetry and critical health and safety telemetry be modifiable. This provides flexibility during Integration and Test (I&T), as well as facilitating problem correction after launch.

The instrument will prepare telemetry for gathering by the C&T BC in accordance with schedules defined by the instrument. Each instrument telemetry point regardless of housekeeping telemetry data stream must be sampled at least once per master cycle.

BDU Telemetry Gathering

Figure 6–14 shows the BDU sub–minor cycle task schedule which is based on the BDU minor cycle of 8 milliseconds. This design results from a Spacecraft bus requirement to begin a command execution, or sample data within ±100 microseconds predictability. The bus utilization table is also used to satisfy this requirement.

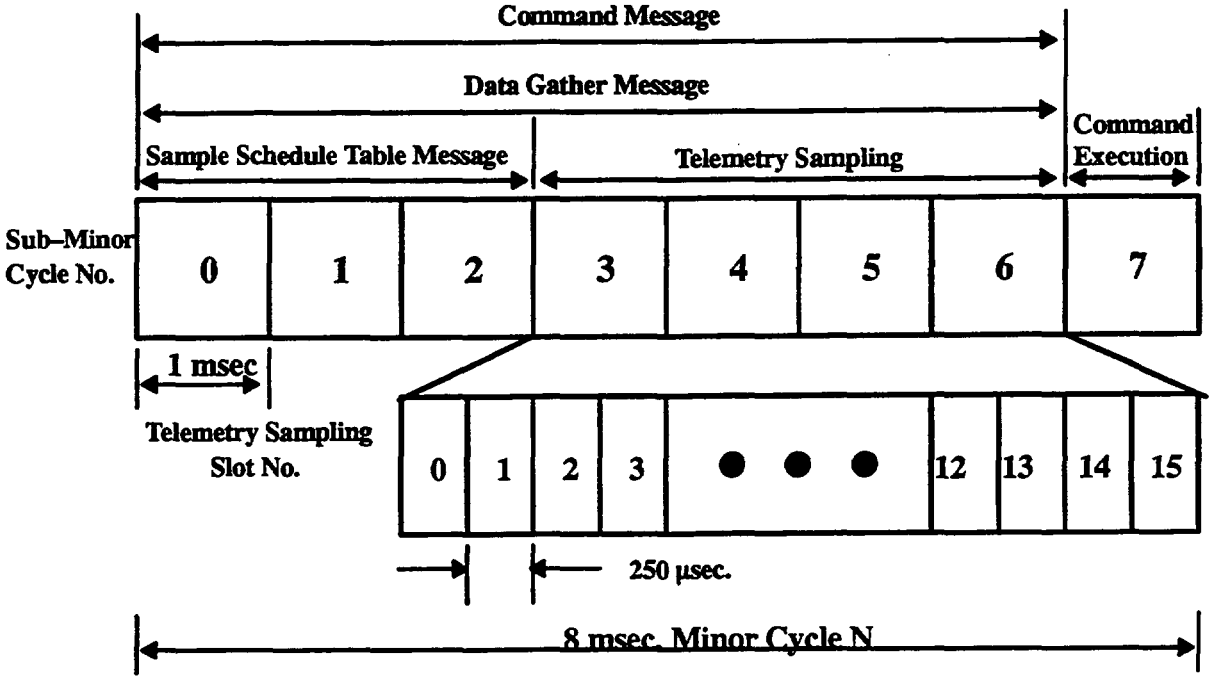

Figure 6–14. BDU Sub–Minor Cycle Task Schedule

The BDU task schedule is divided into 8 sub–minor cycles of 1 millisecond apiece. Each potential BDU message is assigned a specific allowed time within the BDU to start message processing. The BDU will accept a message until the start (transition) of a specific sub–minor cycle. For example, a BDU sample schedule table message must be received by the RT before the BDU transitions from sub–minor cycle 2 to sub–minor cycle 3 This is ensured by task scheduling within the bus utilization table and maintaining the required synchronization between a C&T RT and the C&T BC cycles. The receipt of such a table before the transition occurs will cause sampling to start in sub–minor cycle 3 and end in sub–minor cycle 4. Each sample entry in the table has a fixed 250 millisecond window in which sampling will start and complete. There are 16 sampling windows and there is a maximum of 16 entries in the bus sample schedule table. During the entire sampling window (sub–minor cycle 3 until the transition from sub–minor cycle 4 to sub–minor cycle 5), the BDU does no other processing except for accepting, validating and storing additional messages.

A BDU sample schedule table will be a 1553B receive message with a subaddress equal to 3 (see Figure 6–15). This message is used to sample telemetry from instruments. The number of 16–bit data words contained with a BDU sample schedule table may vary from 1 to 16 where each data word represents one entry in the table. Each table entry will be used to sample and gather 8 bits of telemetry data. Each word (see Figure 6–16) defines a telemetry control word. The telemetry control word provides information as to telemetry type, I/O board address, telemetry channel address, and end of telemetry table bit. A group of 8 bilevels are one BDU sample schedule table entry.

6.1.2.4.3.1 Instrument Normal Housekeeping Telemetry Collection

The instrument will receive one H/K telemetry data gather request for every major cycle. The message size is 512–bits. The instrument is responsible for providing all the normal housekeeping in this data stream which includes the critical health and safety data.

6.1.2.4.3.2 Instrument Critical Health and Safety Housekeeping Telemetry Collection

The instrument will receive one gather request once a major cycle for critical health and safety housekeeping telemetry. The instrument will provide 16–bits of telemetry.

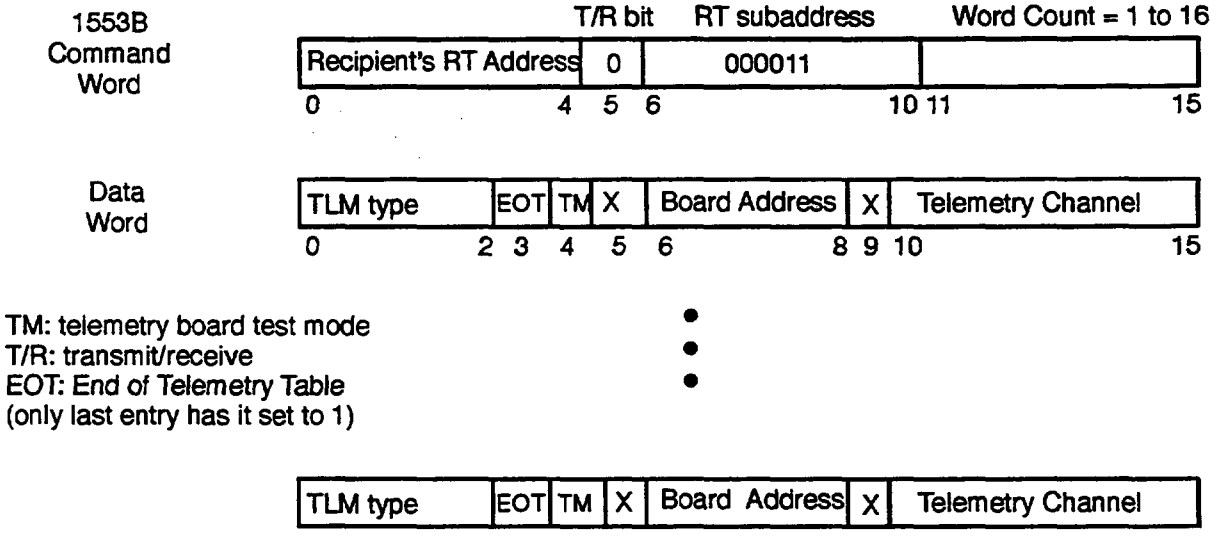

Figure 6–15. BDU Sample Schedule Table Message

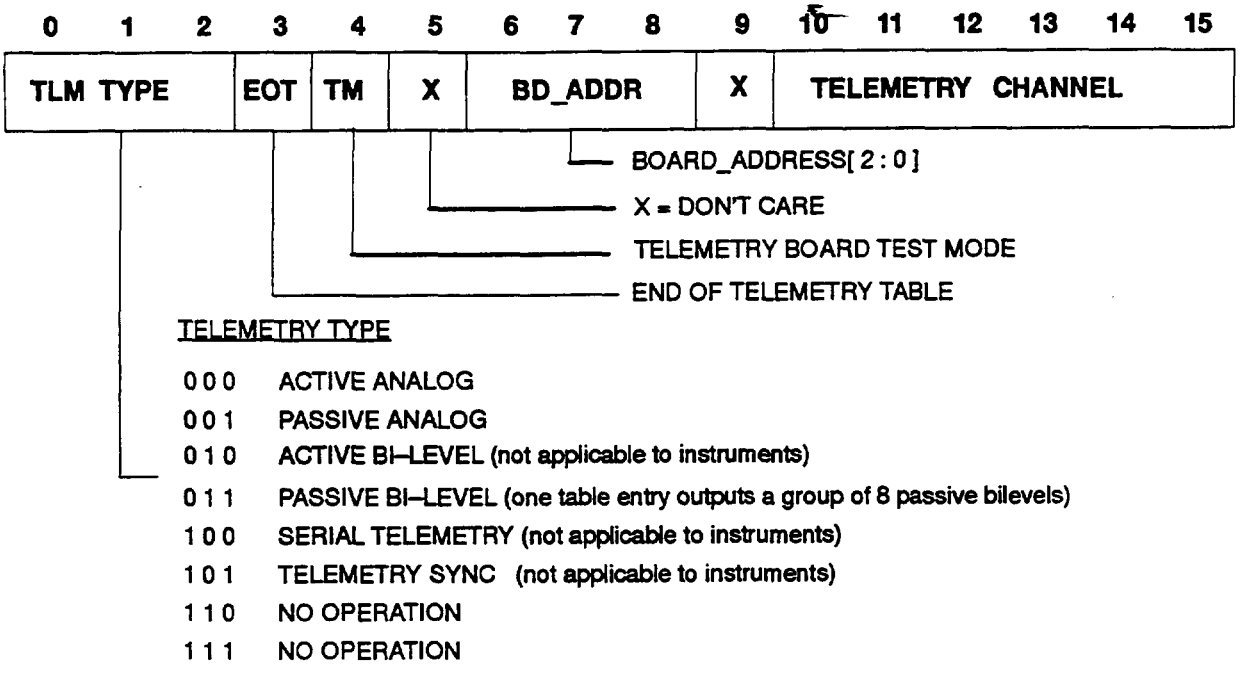

Figure 6–16. BDU Telemetry Control Word

6.1.2.4.3.3 Instrument Housekeeping Telemetry Readiness

Upon receipt and validation of the data gather request, the RT transfers the telemetry to the C&T BC. The instrument must have the data ready for transfer at least one minor cycle in advance of the minor cycle containing the data gather expected by the instrument. The instrument must also leave the data undisturbed for one minor cycle after the minor cycle containing the gather command. This 24 msec window accommodates possible imprecision between the Spacecraft and instrument synchronization to a minor cycle. The instrument ICD will reflect the gather window individuality since the synchronization difference may vary between instruments. The gather window also minimizes the impact of retries, assuming the telemetry was not altered by the instrument within the specified window. This window is to be used for all telemetry generated by the instrument (whether sampled once a minute or at the sub–second level), and is not intended to imply time criticality of the data content.

6.1.2.4.4 Memory Load Transfers

A memory load transfer to an instrument will be a "receive" message to C&T RT subaddress 2 with 1 to 32 16–bit data words transmitted by ground control. The active CTIU will distribute the memory load transfer as a ground command task in the minor cycle task list. There may be multiple load transfer within one memory load operation. Memory load operations (i.e., command definition and command sequences) are covered in Section 7.

6.1.2.4.5 Memory Dump Transfers

Memory dump content and gather schedule will be specified by command. Command definition and command sequences are covered in Section 7.

6.1.2.4.6 SCC OK, Ancillary Data, Time Code Data, and Safe Mode Commands

The SCC OK message is a positive health status message sent to the active CTIU by the active SCC every 1.024 seconds. The active CTIU transmits a "receive" message to C&T RT subaddress 5. The active CTIU will distribute the IMOK message as a miscellaneous task in the minor cycle task list. The originating source is always the active CTIU but it will only send the IMOK message if and only if it received an SCC OK message from the SCC.

The ancillary data message is a "receive" message to C&T RT subaddress 4. The active CTIU will distribute the ancillary data message as a miscellaneous task in the minor cycle task list. The originating source is always the active SCC.

A Time Code Data is a "receive" message to C&T RT subaddress 6. The active CTIU will distribute the Time Code Data message as a miscellaneous task in the minor cycle task list. The originating source is always the active CTIU.

A Safe Mode Command is a "receive" message to C&T RT subaddress 7. The active CTIU will distribute the safe mode command as a command task (either onboard or ground) in the minor cycle task list.

6.1.2.4.6.1 SCC OK, Ancillary Data, and Time Code Data Transfer Frequency

SCC OK, Ancillary Data, and Time Code Data are transferred once per major cycle (65.536 seconds) to each instrument.

6.1.3 Command and Telemetry Bus Data

6.1.3.1 Commands

The C&DHS validates each message it receives via a link in the communication path. The C&DHS delivers each validated command intact and in the order it was received from the ground or from the SCC. The CTIU will deliver the next command to a C&T RT whether or not the prior command to that C&T RT was received successfully.

Commands to the instrument's C&T RT distinctly different from commands issued to the BDU in both intent and data structure. Instrument C&T RT commands include data transfers such as memory loads, real–time commands and onboard stored commands. BDU commands are strictly relay drive command, and are as shown in Figure 6–8.

A single command may be sent by the ground controller as a real–time command or may be sent by the SCC from stored commands. Whenever this is possible, the command data structure should be the same.

Telemetry gathering requests are the same for both the BDU and instrument C&T RTs except all BDU sampled data is gathered from subaddress 3. These telemetry gather commands are strictly 1553B transmit commands to either subaddress 17 (normal housekeeping telemetry) or subaddress 18 (critical housekeeping telemetry). Included in the transmit command is a word count defining how many data words the RT is to return.

6.1.3.1.1 Real–Time Commands

The command structure, shown in Figure 6–7, closely resembles the 1553B message structure. This was done to simplify CTIU processing and contingency operations. The real–time command includes up to three different types of information. The first type provides command destination information (i.e., 1553B message header). The second type of information is referred to as the command descriptor (1 data word). This also includes a third kind referred to as optional command data words which can be up to 31 words (16 bits each).

Instrument commands are the commands unique to each instrument. The contents are entirely at the discretion of the instrument. The command should be the same whether it appears as a stored command or a real–time command.

The BDU has a defined data structure for relay drive commands. See Paragraph 6.1.1.1.2.1.

6.1.3.1.2 Stored Commands

There will be two different types of stored commands: 1) ATC and 2) Relative Time Commands (RTC). The relative time commands will be organized into groups of commands known as RTCS. These commands are described in depth in Section 7.2.2.2.

6.1.3.1.3 Safe–Mode Command Structure

There are multiple commands associated with safe–mode. See Section 7.2.2.3.3.2 for more details on the safe–mode command.

6.1.3.1.4 SCC OK Command Structure

An IM OK message is sent periodically within a major cycle. The instrument must determine that 5 seconds of time have elapsed since the last message and go to safe–mode. Since there are times when the IM OK is not available, safe–mode enable and disable commands are required for the I&T phase and for on–orbit contingency operations. These are discussed in Section 7.2.2.3.3.1.

6.1.3.2 Memory Load and Dump Initiate Command Structures

6.1.3.2.1 Load Initiate Command Structure

The structure of memory load initiate command messages is shown in Figure 6–2 in the GIIS.

6.1.3.2.2 Dump Initiate Command Structure

The structure of memory dump initiate command messages is shown in Figure 6–3 in the GIIS.

6.1.3.3 Memory Load Data Messages

Memory load data messages are detailed completely in Section 7.2.2.1.1.

6.1.3.4 Memory Dump Data Messages

Memory dump data messages are detailed completely in Section 7.2.2.1.2.

6.1.3.5 Ancillary Data Messages

6.1.3.5.1 Ancillary Data Contents

Ancillary data message content is shown in Table 6–2 of the GIIS.

6.1.3.5.2 Ancillary Data Message Format

Ancillary data message data field format is shown in Table 6–3 of the GIIS.

6.1.3.6 Time Code Data Messages

6.1.3.6.1 Time Code Data Contents

The time will be Spacecraft time represented as in the CCSDS standard day segmented time code format, accurate to 100 microseconds. See description in Section 6.1.2, 6.1.2.4.6, and 7.4.4.

6.1.3.6.2 Time Code Data Epoch

The epoch is defined completely in CCSDS 301.0–B–2.

6.1.3.6.3 Time Code Data Format

Format for time code data messages is shown in Table 6–4 of the GIIS.

6.1.4 Command and Telemetry Bus Protocols

Processor Interrupts

The 1553B protocol provides the ability to interrupt the instrument host (processor) upon receiving any command. Use of interrupts is at the discretion of instrument designers; however, it is recommended that only the synchronize–with–data–word command cause an interrupt. This command is used to synchronize instrument, RT and BC activities. Thus immediate recognition of receipt is critical to maintaining this synchronization.

All other mode command and data exchanges should be responded to at the end of a minor cycle because of the possibility of message retries during the exchange with the BC. Therefore, it is recommended that the instrument poll the RT at the end of each minor cycle to determine whether commands have been received. The status words, set by the RT during minor cycle access, can be used for this purpose. All subaddresses appearing in the status would be read to retrieve the commands.

Instrument commands must be retrieved from storage by the instrument host within one minor cycle to prevent overwrite by subsequent minor cycle activities. This may require double buffering or looping through multiple subaddress storage areas. The Spacecraft Bus assumes that messages received on orbit are already packaged within 1553B length limitations. If multiple messages are required to complete an intended function, it is the responsibility of the instrument to define message format and manage a multiple message transmission. The memory load operation could be used for large data blocks. This operation is described in Section 7.

Asynchronous Communication

Asynchronous communications is contrary to the highly structured, CTIU initiated operation intended for C&T bus usage, and therefore will not be implemented. Contingency procedures will be implemented, but they will result from the monitoring of health and safety telemetry.

Similarly, there should be no need for a separate indicator of instrument health, as provided by the Subsystem Flag. It is assumed that the housekeeping telemetry contains all pertinent information, and thus eliminates the need for special asynchronous data. For this to be true, the instrument must define telemetry which reflects all behavior in a timely fashion, including autonomous FDIR results and actions.

Status Bit Use

A status word is provided by the RT to the BC after a 1553B message has been received and validated. No status word is sent if the message does not pass the validation test. Of the bits available within the status word, only the message error bit is required by the standard, all others are optional. Table 6–2 defines the status word bits to be used on the C&T Bus.

The message error bit is set by the RT if the received message does not pass validation tests. Included in the validation tests are checks for invalid mode codes and invalid subaddresses. The RT withholds the status word, awaiting a transmit status word mode code command from the BC. Upon receipt of this command and transmission of the status word, the bit is reset. The BC response includes a retransmission attempt. Bus activity moves on to the next message.

TABLE 6–2. C&T RT ASSIGNED STATUS BITS

STATUS BIT	USE	COMMENT
MESSAGE ERROR	YES	Mandated by 1553B Standard. To be reset on receipt of Status Word Request mode command.
INSTRUMENTATION	NO	Distinguishes command and status words from data words. Deemed unnecessary.
SERVICE REQUEST	NO	Used for asynchronous input to BC; Normal status reporting and failure reaction should be adequate. Use requires additional protocol and RT, BC complexity.
BROADCAST COMMAND RECEIVED	NO	Broadcast not used.
BUSY	YES	To be set by RT host when unable to process commands. Specific intended use is to indicate that the RT is initializing, and not yet fully operational.
SUBSYSTEM FLAG	NO	Assume that instrument problems are reflected in instrument telemetry. It is recommended that the instrument telemetry include a cyclic counter to aid in verifying that received telemetry is valid (updated at expected rate).
DYNAMIC BUS ACCEPTANCE	NO	CTIU/BC switching performed by discrete commands.
TERMINAL FLAG	NO	Indicates RT failure.

The busy bit will be set when power is first applied to the RT, and reset upon initialization completion. This is the only event in which the busy bit will be set. For all other conditions, such as command capture, prior knowledge of RT characteristics determine what actions will cause an RT to become busy, thus preventing any unnecessary busy conditions.

6.1.4.1 Instrument Command and Telemetry Bus RT Address Assignment

Each instrument will receive a unique address on the C&T bus. This address will be documented in the instrument Command and Telemetry (C&T) ICD. The address is carried as an RT Identifier within 1553B commands and status words. The instrument RT determines which messages on the bus are to be processed based on this identifier.

6.1.4.2 MIL–STD–1553B Message Identification

Message identification is supported by subaddress assignments. The subaddresses identify the type of data contained in the message. For subaddresses which are only used by one type of message, such as time code data, no further identification is required. For subaddresses used by several types of messages, an identifier must be embedded within the data field.

6.1.4.2.1 MIL–STD–1553B Message Subaddress Definition

The Spacecraft has reserved a subset of subaddresses. The subaddress assignments are defined in Table 6–5 of the GIIS. An instrument may only use these subaddresses as intended by the Spacecraft designers. The receive subaddress 3 (controls command) and transmit subaddress 16 (SCC telemetry data) are invalid for instruments.

The following RT protocol example was created to aid in the understanding of subaddresses as well as other 1553B features. It is not intended to direct the instrument design. In this example, the mechanics of command processing is done through memory shared between the RT and the instrument. The implementation detail is based on the features of the United Technologies Microelectronics Center (UTMC) model UT1553B BCRTM chip set.

Each instrument will receive a unique address on the C&T bus. This address will be documented in the instrument C&T ICD. The address is carried as an RT Identifier within 1553B commands and status words. The instrument RT determines which messages on the bus are to be processed based on this identifier.

Associated with each RT subaddress and 1553B mode code command are three descriptor words which define what happens when that subaddress or mode code is received by the RT. The descriptor words associated with subaddresses are diagramed in Figures 6–17 and 6–18. A similar set is assigned to mode codes but is not shown.

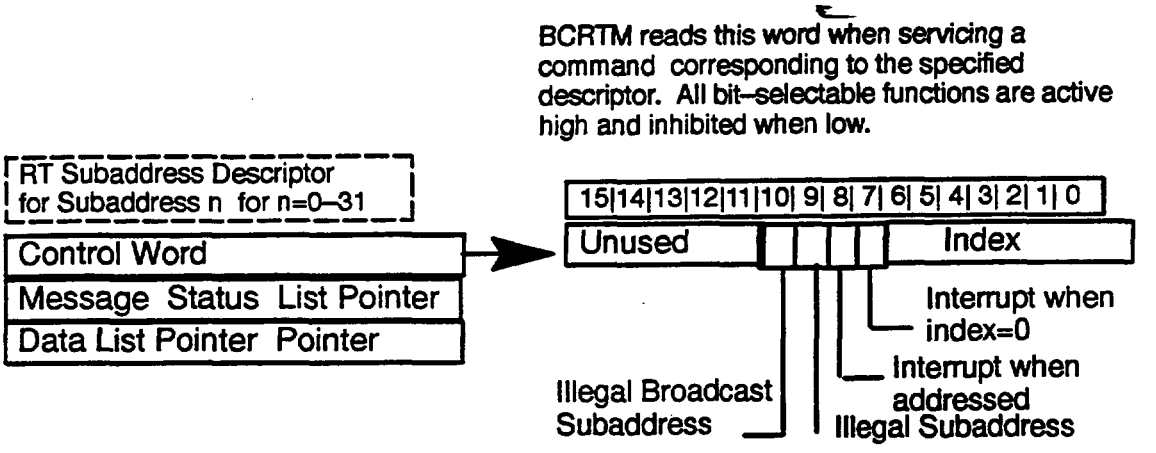

Illegal Broadcast Subaddress: Indicates BCRTM not to access this subaddress during broadcast. Will cause Message Error Bit to be set if addressed.

Illegal Subaddress: Set by instrument—indicates to the BCRTM that a command with this subaddress is illegal. Will cause Message Error Bit to be set if addressed.

Interrupt upon valid command received. Indicates that the BCRTM is to assert an interrupt every time when a command addresses this subaddress. The interrupt occurs just prior to the post–command descriptor updating

Interrupt when Index=0. EOS implementation will not use this

Index. These bits are for indexed message buffering. Indexing means transacting a pre–specified number of messages before notifying the instrument.

Figure 6–17. Subaddress Descriptor Control Word

The first descriptor word is the control word. This word defines illegal subaddresses (those not used in a specific implementation), and whether interrupts are to be generated either upon initial receipt or after a specific number of commands have been received using the Index field. In the recommended scheme, interrupts would not be set for any subaddresses; and only the synchronize–with–data–word would generate an interrupt.

The second descriptor word is the message status list pointer. This word points to an address where the message status word for this command is stored. The message status word is generated by the RT upon receipt of a command. This list of words would be read by the instrument to determine whether commands had been received during the minor cycle. Status for up to 32 distinct commands per subaddress can be saved. The message status word contains, among other things, the command word count and time of command receipt. The time tag has a 64 microsecond resolution, and covers a 16 millisecond duration. Since only one command for a given subaddress will be transmitted during a

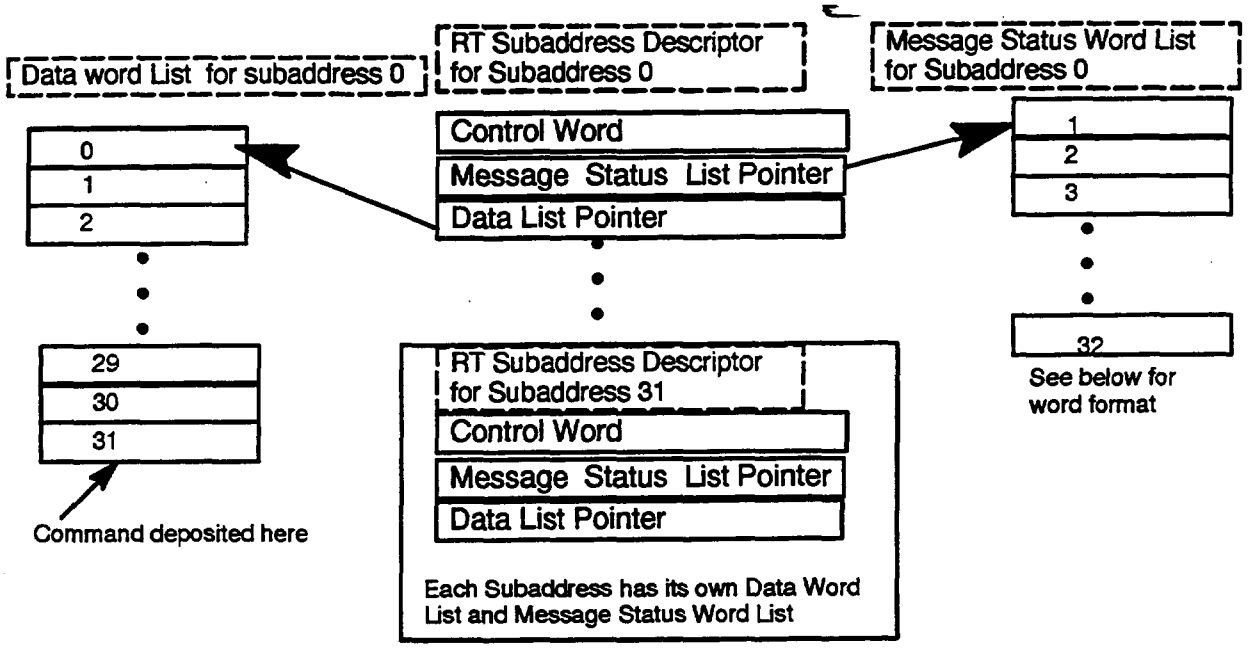

Message Status List Pointer — BCRTM uses pointer to store status word in Message Status List. It will increment by one with each message write.

Data List Pointer. BCRTM stores received data in memory beginning at the address indicated by this pointer. The pointer is updated at the end of each successful message with the next message's starting address with some exceptions such as if the message is erroneous the next message will overwrite the data.

Message Status Word allows the instrument/BDU to evaluate the message's validity, determine the word count, and calculate the approximate time in which the message was transacted.

Subsystem Failed. Indicates failure was asserted before the Message transfer to memory. N/A to EOS.

Broadcast. N/A for EOS

Message Error. Indicates a message is invalid

Word Count reflects Word Count field in the command word. If actual word count <,> than Word count, Message Error bit set in Status Word.

Time Tag. BCRT writes the internally generated Time Tag to this location after message completion. resolution is 64 microseconds

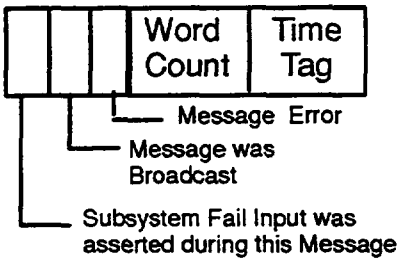

Figure 6–18. Subaddress Descriptor Data List and Status Words

minor cycle, only one message status word for each subaddress need be polled by the instrument at the end of every minor cycle. If there is an entry, a 1553B command has been received by the RT. One of the post minor cycle housekeeping chores would be to clear all message status words. The time tag may be used in association with the synchronize–with–data–word mode code command.

The third word is the data list pointer. This word points to the memory block where the actual command is stored. The instrument must retrieve this data based on the word count in the associated message status word, decode, and process the command. This memory need not be cleared after each minor cycle.

In addition to the above descriptor words, the BCRTM provides three words associated with each interrupt (interrupt log list); these words are the interrupt status word, the subaddress and mode descriptor pointer, and a pointer to the next entry. These words would only need accessing to ascertain whether the synchronize–with–data–word mode code had to be sent more than once.

6.1.4.2.2 Instrument Specific Subaddresses

Instrument–specific subaddresses will be documented in the C&T ICD.

6.2 Time Mark and Frequency Bus

The master time reference is maintained in the CTIU. A time mark is encoded on the reference frequency using duty cycle variations to provide the instrument a method of synchronizing with the Spacecraft clock. Time marks occur every 1.024 seconds coincident with the major cycle.

6.2.1 Time Code Data Valid Indication

The Time Mark and Frequency (TM&F) bus provides a frequency reference and a time mark which indicates the valid time of the last time code data message.

6.2.2 Time Information Timing

Figure 6–4 in the GIIS illustrates the timing relationship between the C&T and TM&F buses. It should be noted that the start of each major cycle on the C&T Bus is synchronized with the 1.024 second time mark on the TM&F.

6.3 Low–Rate Science Data Bus

The instrument will assemble the science data into CCSDS packets and transmit the resulting data to the SFE via the low–rate science bus. Operation of the SFE is detailed in Section 7.1. The low–rate science bus is implemented using MIL–STD–1553B. The SFE

will be configured as the BC to accept data from low–rate instruments and the CTIU. The aggregate of all data received through the low–rate science bus will be multiplexed together and allocated to a single down link virtual channel using the CCSDS defined Standard Service.

The low–rate Science Bus characteristics are as follows:

a. Bus Type: MIL–STD–1553B, Dual–Redundant,Transformer–coupled

b. SFE Node Configuration: BC

c. Input Aggregate Data Rate: 0 to 200 (**TBR**) kbps

d. Input Data Format: CCSDS Version–1 Source Packets

Each RT on the low–rate science bus receives a unique 5–bit bus address which is contained in the 1553B message transmitted by the BC.

6.3.1 Low–Rate Science Data Interface Configuration

There will be two low–rate science buses. One string of the redundant pair will be capable of supporting the full traffic load. The SFE functions as the BC and operates the bus in a polled fashion, with all other nodes configured as RTs. The SFE is part of the C&DHS, as shown in Figure 6–1.

6.3.2 Broadcast Mode on the Low–Rate Science Data Bus

The MIL–STD–1553B broadcast mode of operation will not be implemented on the low–rate science data bus. This mode is prohibited because the RTs do not respond with a status word to indicate valid receipt of the broadcast message.

6.3.3 Low–Rate Science Data Transfer Timing

Figure 6–5 in the GIIS portrays the timing of the packet transfers via the low–rate science data bus. Polling requires 170 microseconds, and data transfer time depends on message size. A 512–bit message requires 710 microseconds to transfer to the BC. Multiple data messages are sent to the BC until the output buffer is depleted.

6.3.4 Low–Rate Science Data Bus Data Format

The instrument is required to assemble its science data into source packets compatible with the Path Packet Service described in CCSDS 701.0–B–1, Section 3.3.3. The format of the packet is shown in GIIS Figure 6–6. Low–rate science data packets from the instrument can be as large as 61,440 bits.

6.3.5 Low–Rate Science Data Bus Transfer Protocol

Table 6–3 lists the low–rate science bus status bits. The USE column defines if they will be implemented or not. Table 6–4 lists the subaddresses to be used by the RTs on the low–rate science bus. In both tables, differences with the C&T bus are highlighted.

TABLE 6–3. LOW–RATE SCIENCE ASSIGNED STATUS BITS

STATUS BIT	USE	COMMENT
MESSAGE ERROR	YES	Mandated by 1553B Standard. To be reset on receipt of Status Word Request mode command.
INSTRUMENTATION	NO	Distinguishes command and status words from data words. Deemed unnecessary.
SERVICE REQUEST	**YES**	**Used for asynchronous input to BC. Bit will be set by instrument when there is science data ready for transfer.**
BROADCAST COMMAND RECEIVED	NO	Broadcast not used.
BUSY	YES	To be set by RT when unable to process commands. Specific intended use is to indicate that the RT is initializing, and not yet fully operational.
SUBSYSTEM FLAG	NO	Assume that instrument problems are reflected in instrument telemetry. It is recommended that the instrument telemetry include a cyclic counter to aid in verifying that received telemetry is valid (updated at expected rate).
DYNAMIC BUS ACCEPTANCE	NO	CTIU/BC switching performed by discrete commands.
TERMINAL FLAG	NO	Indicates RT failure.

TABLE 6–4. LOW–RATE SCIENCE INSTRUMENT SUBADDRESSES

Subaddress	Name	Transmit or Receive
9	Loop Back	T or R
10 – 25	**Low–rate science data output buffers.**	T
0 or 31	Mode Code	T or R
All remaining subaddress numbers are reserved		

6.3.5.1 Low–Rate Science Data Bus RT Address Assignment

RT addresses for instruments on the low–rate science data bus are documented in the C&T ICD.

6.3.5.2 Low–Rate Science Data Bus MIL–STD–1553B Mode Code Utilization

Table 6–5 lists all the MIL–STD–1553B mode codes and identifies those which will be utilized by the Low–Rate Science Data Bus; all unused mode codes will be invalid. Differences with the C&T bus are highlighted.

TABLE 6–5. 1553B ASSIGNED MODE CODES FOR LOW–RATE SCIENCE

Transmit/ Receive bit	Mode Code	Function	Associated Data Word	Used
1	00000	Dynamic Bus Control	No	No
1	00001	**Synchronize**	No	**Yes**
1	00010	Transmit Status word	No	Yes
1	00011	Initiate self–test	No	Yes
1	00100	Transmitter shutdown	No	Yes
1	00101	Override transmitter shutdown	No	Yes
1	00110	Inhibit terminal flag bit	No	Yes
1	00111	Override inhibit terminal flag bit	No	Yes
1	01000	Reset RT	No	Yes
1	01001 thru 01111	Reserved	No	No
1	10000	**Transmit vector word**	Yes	**Yes**
0	10001	**Synchronize**	Yes	**No**
1	10010	Transmit last command	Yes	Yes
1	10011	Transmit BIT word	Yes	Yes
0	10100	Selected transmitter shutdown	Yes	No
0	10101	Override selected transmitter shutdown	Yes	No
1 or 0	10110 thru 11111	Reserved	Yes	No

6.3.5.3 Low–Rate Science Data Bus MIL–STD–1553B Message Subaddresses

Message subaddresses used on the low–rate science data bus are defined in Table 6–6 of the GIIS.

6.3.5.4 Low–Rate Science Data Polling

The SFE will manage the low–rate science bus and operate the bus in a polled fashion. The polling sequence will be capable of redefinition via ground command. Each active instrument in the sequence will be polled for its readiness to transport a complete source packet. The full packet will be transferred before polling resumes.

6.3.5.5 Low–Rate Science Data Packet Readiness

Whenever the instrument has a complete packet ready, the instrument will set the service request bit in the MIL–STD–1553B status word, and indicate the number of octets to be transferred in the 1553B data word associated with the 1553B transmit vector word. The SFE BC will poll each instrument by using the transmit vector word mode code. The instrument RT will respond by transmitting its status word and an associated data word.

6.3.5.6 Total Packet Length Indication

When an instrument is ready to send data, full bus bandwidth will be given to the data source for the length of time required to transport the complete packet. For the purpose of supporting message retransmission, each instrument will provide a buffer which is capable of storing two of the maximum length packets it generates. A data transfer out of this buffer will not destroy the current contents. The BC will send an End–of–Transmission message to the RTs when it has successfully transferred the entire packet.

6.3.5.7 Low–Rate Science Data Packet Transfer

6.3.5.7.1 Low–Rate Instrument Polling Interval

The SFE BC will poll no later than 2 seconds between two contiguous polls for a given instrument RT. This time interval includes data transfers and polling activities on the bus.

6.3.5.7.2 Low–Rate Science Data Throughput Interval

The C&DHS is designed to accept data from any individual low–rate science data source at any data rate up to 200 kbps, when averaged over 2 seconds.

6.3.5.7.3 Low–Rate Science Data Packet Transfer Timing

Packet transfer timing is in accordance with MIL–STD–1553B. The BC repetitively requests messages from the RT until the full packet is collected.

6.3.5.8 Low–Rate Science Data Packet Transfer Method

The instrument is responsible for storing the packetized science data and making it accessible to its RT in time for the data transfer. The packet will be sent to the SFE from the instrument in one or more 1553B messages. The SFE is responsible for managing the overall data transfer.

The SFE BC will issue a MIL–STD–1553B transmit command to the instrument. The number of data transfers will be based on the number of octets supplied by the instrument in the MIL–STD–1553B data word associated with the transmit vector word. The SFE will calculate the appropriate RT subaddress and number of 1553B data words based on the single and multiple message packet transfer rule. The RT subaddresses assigned for the science data awaiting transfer range from 10 through 25 inclusively.

Each time the RT receives the MIL–STD–1553B transmit command and successfully processes it, a MIL–STD–1553B message containing up to 32 16–bit data words, preceded by a status word, is returned to the BC from the designated RT.

6.3.5.8.1 Single Message Packet Transfer

If a packet length is less than or equal to 512 bits, a single message of an integer multiple of 16–bit words will be used to transfer the packet.

6.3.5.8.2 Multiple Message Packet Transfer

If a packet length is greater than 512–bits (32 16–bit words), multiple consectuive messages are sent to consecutive subaddresses starting with subaddress 10. The last transfer message in the series will conform to the single message packet transfer requirement.

For a packet length greater than 8192 bits, once the last available subaddress has been used the subaddress sequence will be restarted at subaddress 10. The instrument may infer from the read of a given subaddress that all previous subaddresses have been successfully read. An instrument may, for example, swap buffers for subaddresses 10 through 18 when a read of subaddress 19 is sensed, and swap subaddresses 19–25 when subaddress 10 is read out. This technique would guarantee the instrument a period of more than 4 milliseconds in which to swap or refill the buffers before another read from that subaddress range is attempted. The last transfer message in the series will conform to the single message packet transfer requirement.

6.3.5.8.3 Transferring an Odd Number of Octets

A 1553B data word contains 16 bits of science data if there are two octets worth of data. If there is only one octet of data, it will be stored in the most significant octet of the 16–bit word.

6.3.5.8.4 End of Transfer Data Word Content

The synchronize–without–data–word is used as a positive indication that the last transfer was successfully received.

6.4 High–Rate Science Data Interface

Dedicated point–to–point links carry high–rate instrument science data to the SFE. There are eight high–rate point–to–point links.

The data source for each of the point–to–point links will be allocated a dedicated downlink virtual channel using the CCSDS fixed data transport service. The VCID assignments are independent of the A/B port configurations and the codes are selected such that the minimum hamming distance between code words is two.

6.4.1 High–Rate Link Science Data Rate

The interface between the high–rate instruments and the SFE is implemented as unidirectional point–to–point differential serial data links operating at burst rates of 63.5 mbps with an effective byte transfer rate of 6.25 Mbytes per second (50 Mbps). The serial line bit rate is higher than either of the parallel ports due to the 4B/5B encoding method used in the TAXI chip set. (Implementation using the TAXI Chip Set is not a requirement, but is assumed for discussion purposes.) The transmitter chip located at the instrument side strobes the 8–bit parallel data and, using an independent clock, converts it to a serial stream for transmission. The receiver located at the SFE side recovers the clock information embedded in the data and packs the incoming serial stream back into 8–bit parallel data. From an end–to–end operation point of view, the serial data is completely transparent to users on either side. The net result is that 8–bit wide data is transferred from one unit to another at high speed using only two shielded wires.

6.4.1.1 High–Rate Link Allocation

An instrument may have more than one high–rate science data link in order to satisfy the data rate allocated in the UIID.

6.4.2 High–Rate Science Data Packet Transfer Timing

A high–rate instrument transfers complete source data packets in a manner which satisfies the timing shown in Figure 6–7 of the GIIS. Since the serial transmission is operating slightly faster (equivalent to 50.8 Mbps) than the maximum instrument data generation rate of 50 Mbps, the difference is filled by the TAXI transmitter with sync symbols. In a totally asynchronous system, these fill octets are interspersed between actual data symbols on the serial line. However, due to bit–error rate considerations, it is desirable to transmit all data octets in a contiguous manner to avoid accounting for possible bit errors in sync symbols that would be present in a message frame. For this reason, it is required that the sync fill be added at the end of the message frame. In addition, any errors detected in a fill region while acknowledged by the receiver, can be automatically excluded from the bit–error tally.

6.4.2.1 High–Rate Science Data Interface Data Format

The high–rate instruments transfer science data using CCSDS version–1 source data packets as shown in GIIS Figure 6–6. The minimum packet size is 1024 bits (128 Octets) and the maximum size is 8192 bits (1024 Octets). The packets can vary in length in full octet increments

6.4.3 High–Rate Science Data Transfer Protocol

6.4.3.1 Data Encoding

The data and control symbols are defined in the Fiber Distributed Data Interface (FDDI) Physical Layer Protocol (PHY), ANSI X3.148–1988.

A single source packet octet requires 2 MAC symbols to transfer across the high speed channel. Thus 1024 source packet octets requires 2024 MAC symbols as indicated in Table 6–7 of the GIIS.

The instrument will encode the data and clock information in compliance with the aforementioned standard. The 4B/5B encoding method is used to embed clock information onto the data stream to form a self–clocking transmission. The "4B/5B" encoding scheme is combined with non–return to zero invert on ones (NRZI).

6.4.3.2 High–Rate Science Message Data Message Format

6.4.3.2.1 High–Rate Science Data Message Symbols

Messages are assembled as sequences of pairs of active symbols; i.e., an even number of symbols is included in each message field.

6.4.3.2.2 High–Rate Science Data Message Fields

Each message, also designated "High Speed Data Unit" (HSDU), will be comprised of five fields, defined and ordered as shown in Table 6–7 of the GIIS.

6.4.3.2.3 High–Rate Science Data Message Info Field Transmission

Only symbols O–F may be used in a high–rate science data message between the message control field and the ending delimeter.

6.4.3.3 High–Rate Link Preamble

An instrument, upon powering up the high–rate interface, needs to transmit at least 20 idle (I) symbols over a period of 250 microseconds before transmitting a packet. The idle symbols form the preamble to the message transfer. These symbols must be generated by the instrument for transmission across the high speed interface. These symbols are recognized as such by the TAXI receiver in the SFE and not entered into the input buffer.

6.4.3.4 High–Rate Link Transmission Gap

An instrument will transmit a continuous stream of J–K symbols between active packet transmissions. This assumes the interface was not powered down by the instrument between packet transmissions. These symbols imply to the receiving end that the instrument interface is still operational and the instrument has not yet started a packet transmission.

(This page intentionally left blank.)

7 COMMAND AND DATA HANDLING OPERATIONAL REQUIREMENTS

This section describes the methods for utilizing the Spacecraft capabilities provided in support of command, telemetry and science data handling.

7.1 Science Data

Science Data is handled separately from command and telemetry by the C&DHS SFE. The SFE provides all science data handling functions as shown in Figure 7–1, receiving data from instruments, formatting, and then routing data to mass storage and/or Communications Subsystem (COMMS) modulators. Science data is collected by the SFE via dedicated instrument high–rate links or by a low–rate science data bus. Any instrument engineering data transmitted across the science data interface is also considered to be science data by the Spacecraft. In addition to science data, a copy of previously collected housekeeping data, which includes instrument telemetry, is supplied to the SFE for downlink with the low–rate science data.

The instrument is required to assemble its science data into source packets compatible with the Path Packet Service described in CCSDS 701.0–B–1, Section 3.3.3. The format of the packet is shown in GIIS Figure 6–6. Low–rate science data packets from the instrument can be as large as 61,440 bits. The SFE will create multiple downlink transfer frames to accommodate packets which exceed 7072 bits. This is due to the 7088 bit maximum size of the CVCDU data unit zone (see Figure 7–2), which includes the MPDU header of 16 bits.

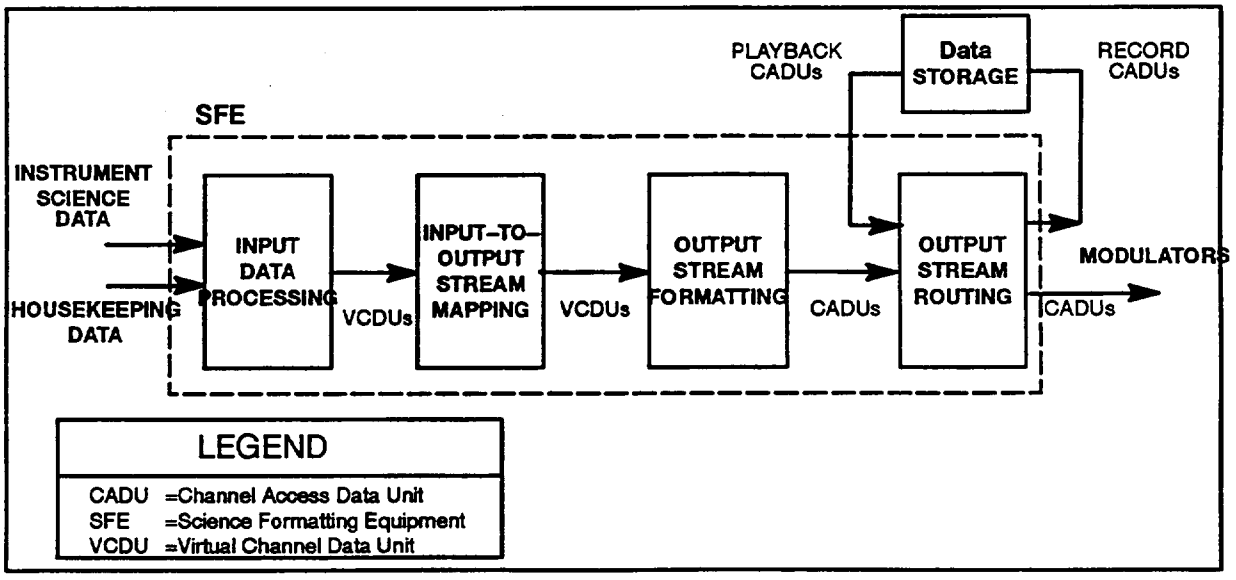

Figure 7–1. Top Level C&DH Science Data Handling Architecture Block Diagram

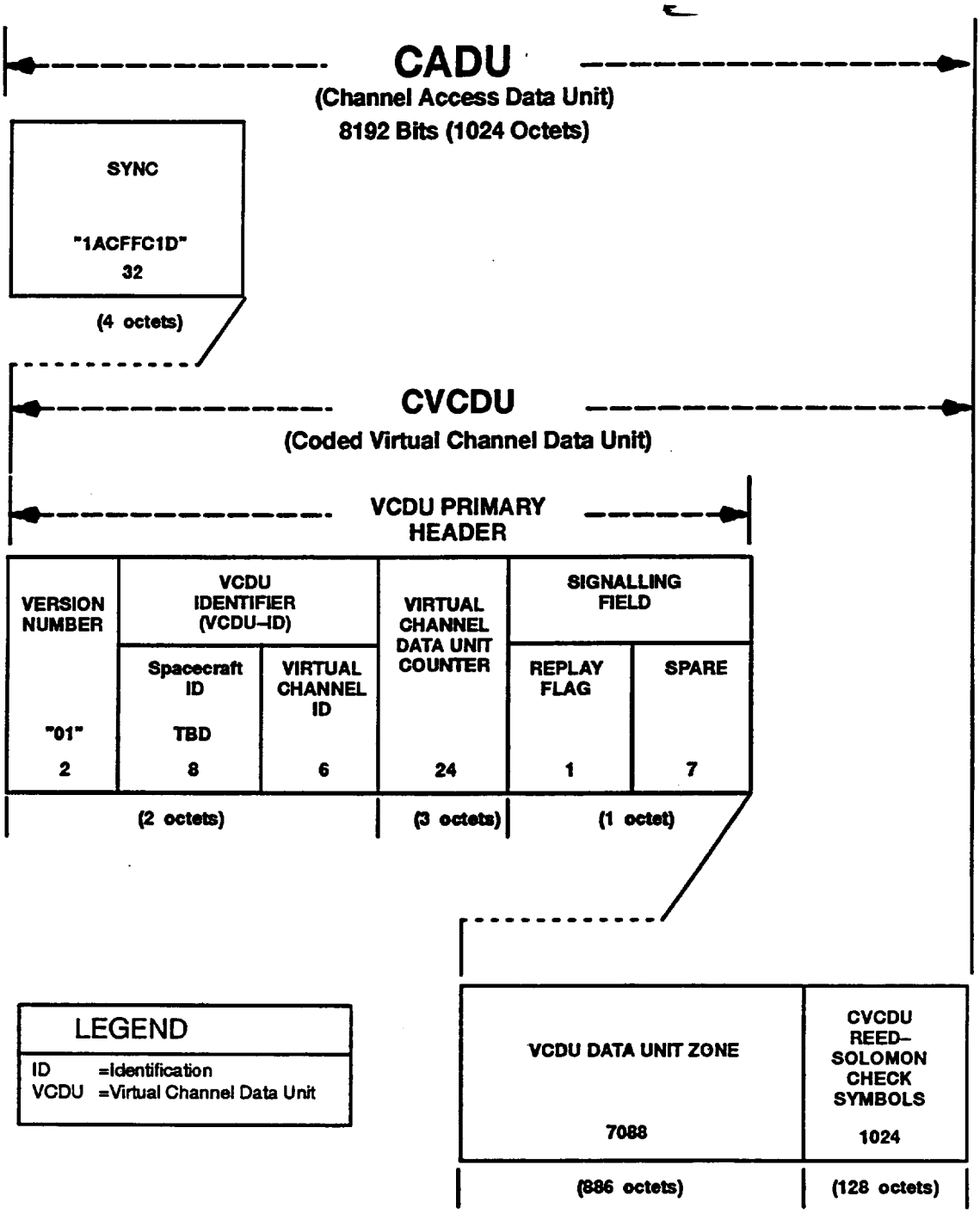

Figure 7–2. CADU, CVCDU and Primary Header Formats

The BC within the SFE gathers the successfully transmitted instrument message containing the science data. The SFE then forwards the data to the downlink and/or to the tape recorder as required.

All CCSDS packets transmitted by the Spacecraft will include a secondary header. The secondary header will include a day segmented time code, and a quick look flag. The total length of the secondary header is nine octets (72 bits). The secondary header must be an integer number of octets where:

a. The most significant bit in the first octet is set to "0" to indicate a non–CCSDS defined secondary header (as required by CCSDS 701.0–B–1 "Advanced Orbiting Systems, Networks and Data Links: Architectural Specification", page 3–15, paragraph 3.3.3.8a).

b. The next 63 bits contain a day segmented time code as defined in CCSDS 301.0–B–2 "CCSDS Time Code Formats" section 2.3.1. Because the most significant 15 bits in this time code count the number of days since the reference date of 1 Jan 1958, the time stamp on an EOS–AM data packet will roll over in the middle of the year 2047 (an ample margin, given a launch date of 1998 and a mission life of five years).

c. The first bit in the ninth octet is the quick–look flag. If the flag is set to '1' the packet is included in a quick look data set; if the flag is set to "0" the packet is not included in a quick look data set. Regardless of how the quick look flag is set, all packets are included in routine production processing.

d. The content of the remaining seven bits in the ninth octet is specified by the source of the packet.

The SFE, solid state buffers (SSBs), and solid–state recorder (SSR) comprise the science data handling segment of the C&DHS. This equipment accepts science data packets from instruments via multiple interfaces. The science data handling segment formats and multiplexes the science data for transmission to EOS Data and Information System (EOSDIS). The science data may be down linked in real–time and/or stored on a SSR. Since the science data is buffered at the SFE input, there is no requirement to transfer the data in a synchronous manner. Multiple data packets need not be transmitted in a contiguous stream. However, the data bits within a packet are contiguous. The data buffers are sized such that they may accommodate up to two incoming packets of the maximum size at any given port.

Figure 7–3 depicts the science data interfaces. Each interface consists of a prime and a redundant port, A and B. For a given interface, activity on the A and B ports are mutually exclusive. However, the SFE accepts data from these interfaces in any combination of A or

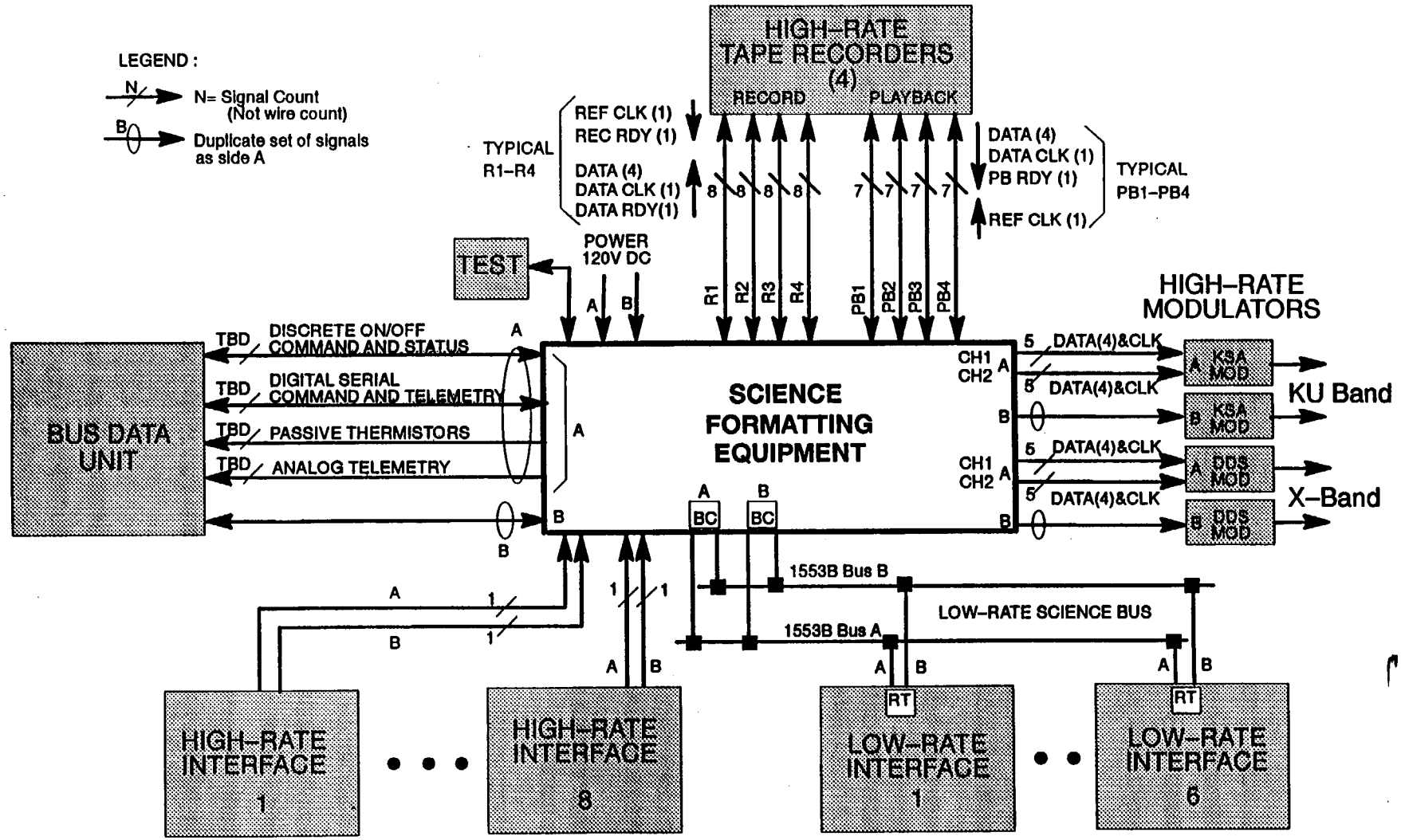

Figure 7–3. SFE Electrical Interface Block Diagram

B port configuration. The port configuration is established and coordinated by the SCC and communicated to the SFE via BDU serial commands. The SFE input port configuration status is telemetered using an 8–bit serial digital telemetry word.

The multiplexed protocol data units (MPDUs) for a particular virtual channel are built and transmitted until all data from the associated buffer is exhausted. The Packet Mulitiplexer function provides a Fill Packet function in order to do a timely completion of an MPDU. This is done by using a MPDU time out parameter which is programmable via a BDU serial command to the SFE by the Spacecraft computer. When the sync fill exceeds a specified period, it is assumed that the last packet in the current message session has been received from the instrument, therefore any remaining fractional MPDU is appended with fill data and transferred downstream into the physical channel.

Since the satellite/ground link is considered noisy, Grade–2 service is provided which means:

> Data packets are delivered possibly incomplete, but with their sequence preserved and very high probability of containing no errors. This service appends a Reed–Solomon code in order to provide virtually error–free transmission.

A Coded Virtual Channel Data Unit (CVCDU) is constructed by preceding the MPDU with a header and appending to it the Reed–Solomon code which protects the header and the data.

The physical channel function accepts a continuous stream of data bits at the sending side, modulates the data onto a carrier, transmits over the satellite/ground link, receives and demodulates at the receiving end and delivers the bit synchronized stream through a receiving interface. The physical channel access protocol data unit (PCAPDU) is logically the physical channel and it consists of a contiguous succession of fixed–length CADUs.

7.1.1 Science Data Interface Allocation

The instruments transfer high–rate and low–rate science and engineering data packets. Packets are received from high–rate instruments via point–to–point interfaces and from low–rate instruments via a MIL–STD–1553B bus. Each instrument is designed to use only one type of science data interface (i.e., low rate or high rate). The interface type utilized depends upon the instrument's peak data output rate and is allocated in the UIID.

7.1.2 Science Data Types

7.1.2.1 Low–Rate Science Data

Any instrument which generates science data at less than 100 kbps will use the low–rate science data bus to transfer science telemetry to the Spacecraft. This bus has a maximum bit rate of 1 Mbps; however, the usable throughput is in the range of 500 kbps. However, the latency in servicing each instrument depends upon instrument output characteristics. Buffer sizes and output timing must be specified to estimate service latency.

The SFE manages the polling of the instruments. If a packet is ready for transfer, the instrument stores the number of octets in the packet in a predefined location accessible to its RT and sets an indication in its RTs status word. The BC will issue a 1553B message to the RT. Upon receipt of the polling message from the BC, the RT returns a message containing:

a. the 1553B status word indicator set to indicate a packet is ready to transfer and containing the number of octets in the packet

b. or the indicator is set to indicate no packet is ready to transfer.

The SFE will examine the response returned by the RT. If an RT is ready to transmit, the SFE proceeds to process the information and provides direction to the BC to transfer packet information.

The polling sequence will be capable of redefinition from the ground. Redefinition should not affect instrument output, assuming that all of an instrument's buffer is read before moving on to the next instrument.

7.1.2.2 High–Rate Science Data

A variable length packet capability exists which allows for more than one packet per MPDU, as well as packets that are split between MPDUs. The design also supports continuous or burst bit transmission rates up to 63.5 Mbps. The high–rate interface is capable of data transfers at 50 Mbps. The hardware interface design prevents exceeding this data rate input to the SFE, since the instrument output logic is tightly coupled to the transmitter logic at this data rate. Any instrument which generates data at greater than or equal to 100 kbps will use the high–rate science data interface to transfer data to the Spacecraft. An instrument may have more than one high–rate interface.

The SFE handles each operating high speed channel in parallel and independently of the others. A CADU is generated for each high speed channel, along with it's unique Virtual Channel Identification (VCID), and sent to the COMMS and/or the SSR with the playback (PB) bit set.

7.1.2.3 Engineering Data

Engineering Data is defined as the set of data which must accompany science sensor readings to allow for interpretation and evaluation of those readings. Examples of Engineering Data are scanner position and synchronization times, aperture size or selection, spectrum filter parameters, etc. Engineering Data may contain telemetry related to instrument health and safety; however, Engineering Data is not monitored by the Spacecraft Bus. These data are assumed to be included in the data rates for each instrument.

Engineering and sensor data may be segregated into separate packets or combined within one packet output by the instruments. From the Spacecraft Bus perspective, this data is considered to be part of the same science data stream.

7.1.3 Science Data Requirements

7.1.3.1 Application Process ID

The Application Process Identifier (APID) is a field within each data packet which provides an identifier for the data within the packet. The APID is applied by the instrument and used by the ground for data discrimination and routing.

7.1.3.1.1 Application Process ID Allocation

To facilitate data identification and ground routing, APIDs will be uniquely assigned to all instruments. APIDs for the CTIU issued housekeeping telemetry and ancillary data will be unique.

7.1.3.1.2 Application Process ID Documentation

The APIDs used will be documented in the C&T ICD.

7.1.4 Science Data Interface Test Packet Requirements

7.2 Commands

The following presents an overview of the commanding distribution process by providing an example of a real–time command entered by a ground operator. The command path is traced from operator entry through instrument execution. This overview description focuses on instrument commanding via the C&T bus; however, much of what follows also applies to commanding via the Bus Data Unit (BDU).

Figure 7–4 depicts the overall commanding process. In this figure, the major entities are represented by columns, with the entity identified above the column. Within the column, each principal function performed by the entity is placed in chronological sequence.

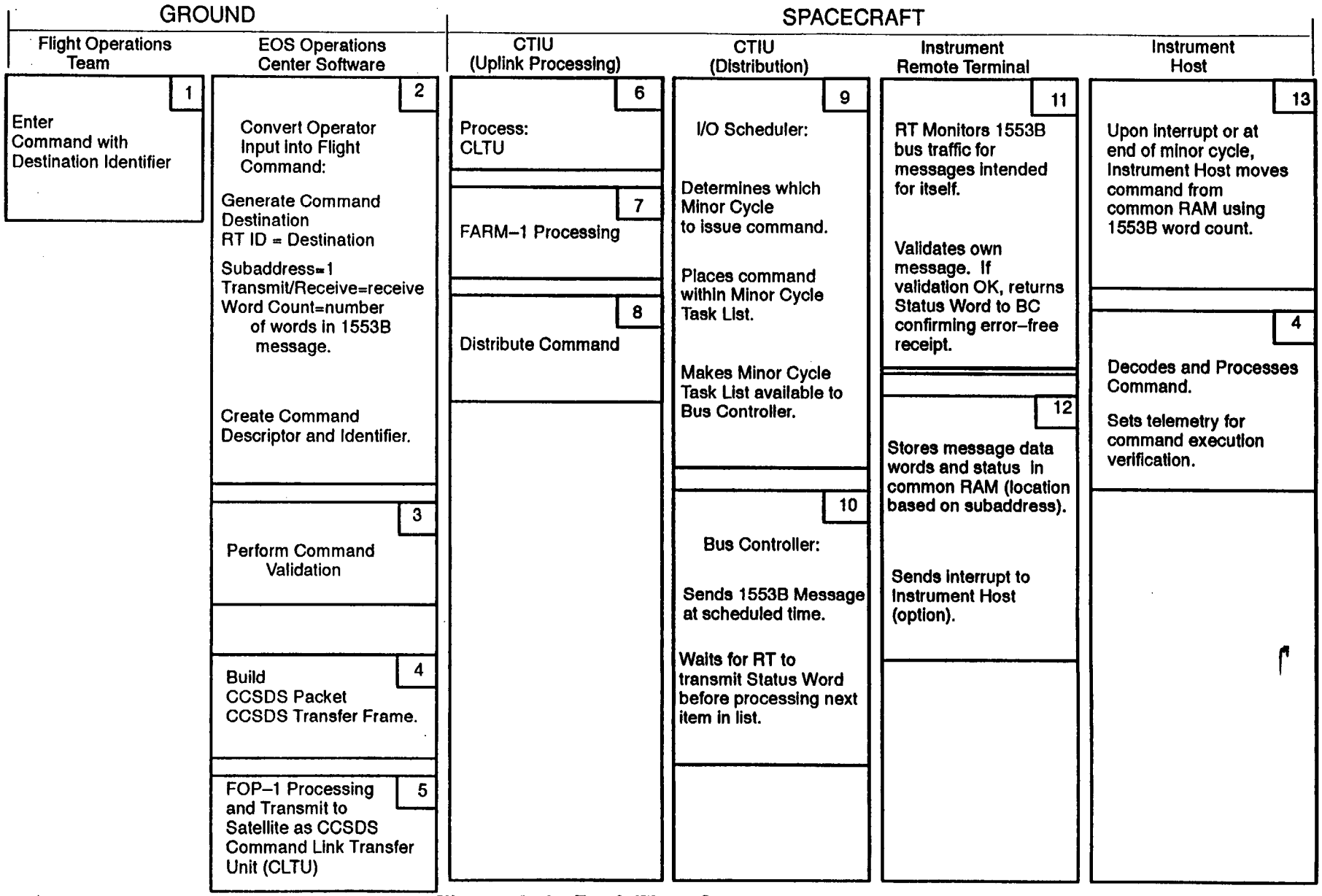

Figure 7–4. Real–Time Command Flow

Significant features are:

a. Ground software must convert operator entry into Spacecraft command.

b. Ground software (or personnel) must perform validity checking to include schedule and timing implications.

c. The flight and ground system work in unison, using the Consultive Committee for Space Data Systems (CCSDS) recommendations to transmit and verify error free message receipt of packetized data within virtual channels (VC). This requires the ground based Frame Operations Procedure (FOP–1) to interact with the flight based Frame Acceptance and Reporting Mechanism (FARM–1). References:

   1. CCSDS Recommendation for Space Data System Standards. Advanced Orbiting Systems (AOS), Blue Book, Issue–1, June 1989

   2. CCSDS Recommendation for Space Data System Standards. Telecommand, Part 1: Channel Service, Architectural Specification, Blue Book, Issue–1, June 1987

   3. CCSDS Recommendation for Space Data System Standards. Telecommand, Part 2: Channel Service, Architectural Specification, Blue Book, Issue–1, June 1987

   4. CCSDS Recommendation for Space Data System Standards. Telecommand, Part 3: Data Management Service, Architectural Specification, Blue Book, Issue–1, June 1987.

d. The Spacecraft routes commands based on unique Spacecraft ID to identify the specific CTIU to perform the uplink processing, and the C&T RT address to determine the destination; and dispatches commands for execution according to the bus utilization table.

e. Within the CTIU, the Input/Output (I/O) Scheduler and BC transmit the commands in the form of a 1553B message to the instrument RT. Transport occurs within the overall bus utilization table of minor and major cycles.

f. The C&T RT receives the message and either notifies the instrument host immediately or saves the command awaiting instrument polling.

g. The instrument host reads the command, decodes and processes it, and updates telemetry to reflect execution.

There are two methods of commanding an instrument, one is via the instrument BDU and the other is via the instrument C&T RT. Both the instrument BDU and the instrument-receive their commands via the C&T bus. Figure 7–5 shows the data flow between the instrument and instrument BDU within the C&DHS.

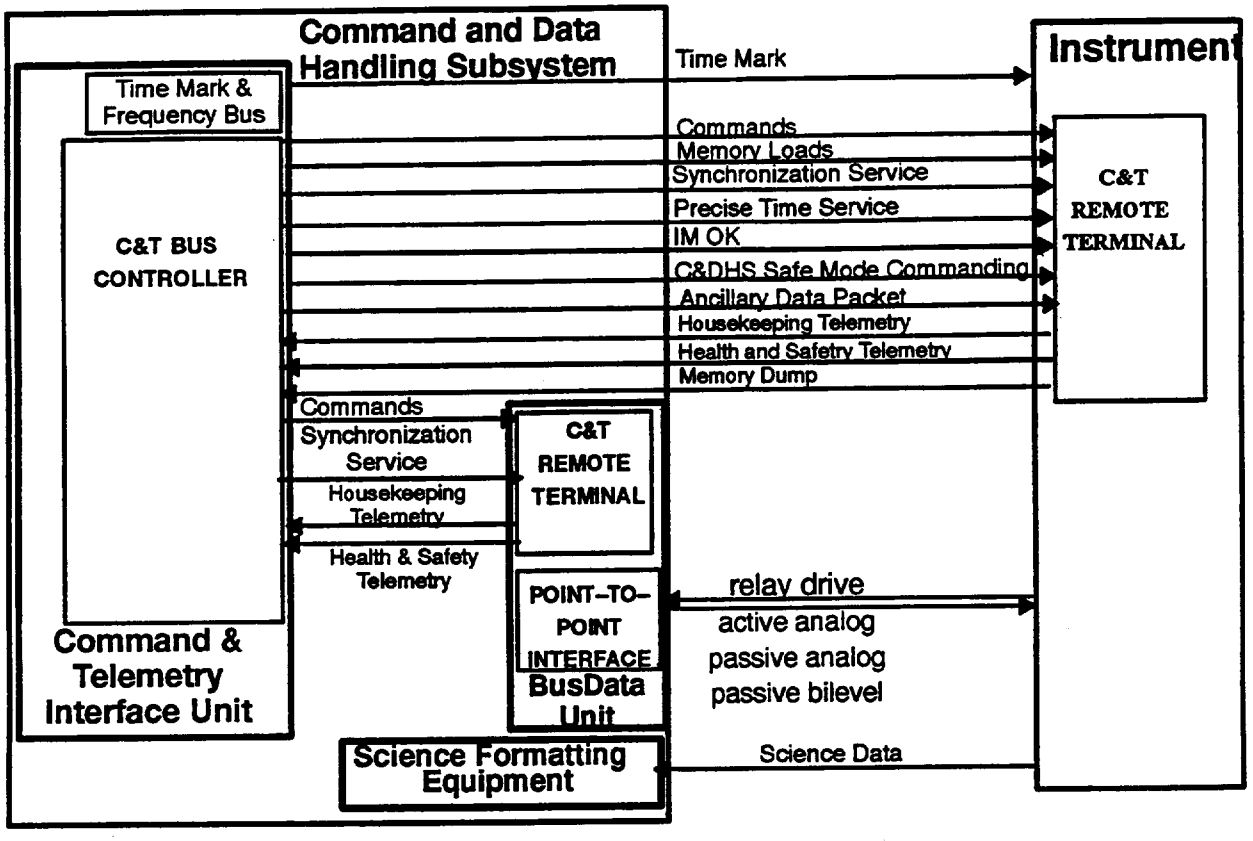

Figure 7–5. C&DHS Data Flow between Instrument and C&DHS

Interaction with the instrument BDU differs from the embedded RT in the following areas:

a. Command processing is transparent to the instrument itself. 1553B Commands are processed totally within the BDU, with the instrument only "seeing" command results (relay setting or voltage level change) upon successful execution.

b. Commands that are issued to the BDU require a command word descriptor shown in Figure 6–7.

c. The BDU telemetry sampling, storage and gathering process is transparent to the instrument.

The uplink command data transfers utilize the Consultative Committee for Space Data Systems (CCSDS) data formats. The Spacecraft implements the Command Operations Procedure number–1 (COP–1) from the CCSDS guidelines. COP–1 is a closed loop telecommanding protocol which utilizes sequential (Go–back–to–N) retransmission techniques to correct telecommand frames which were rejected by the Spacecraft because of error. This requires the ground based Frame Operations Procedure (FOP–1) to interact with the flight based Frame Acceptance and Reporting Mechanism (FARM–1). Reporting

the FARM status is accomplished by generating and telemetering a Command Link Control Word (CLCW) in the downlink. Each CTIU generates CLCWs which are telemetered in the S–band downlink. This is shown in Figure 7–6. This scheme is referred to as CCSDS Telecommand and is defined in references 1 through 4 described in section 7.2.

It is possible for the number of commands uplinked to exceed the command distribution rate by the active CTIU. This event has been prevented by implementing a queue. The active CTIU will report in telemetry as part of FARM processing (CLCW Wait Flag) when the queue is exceeded.

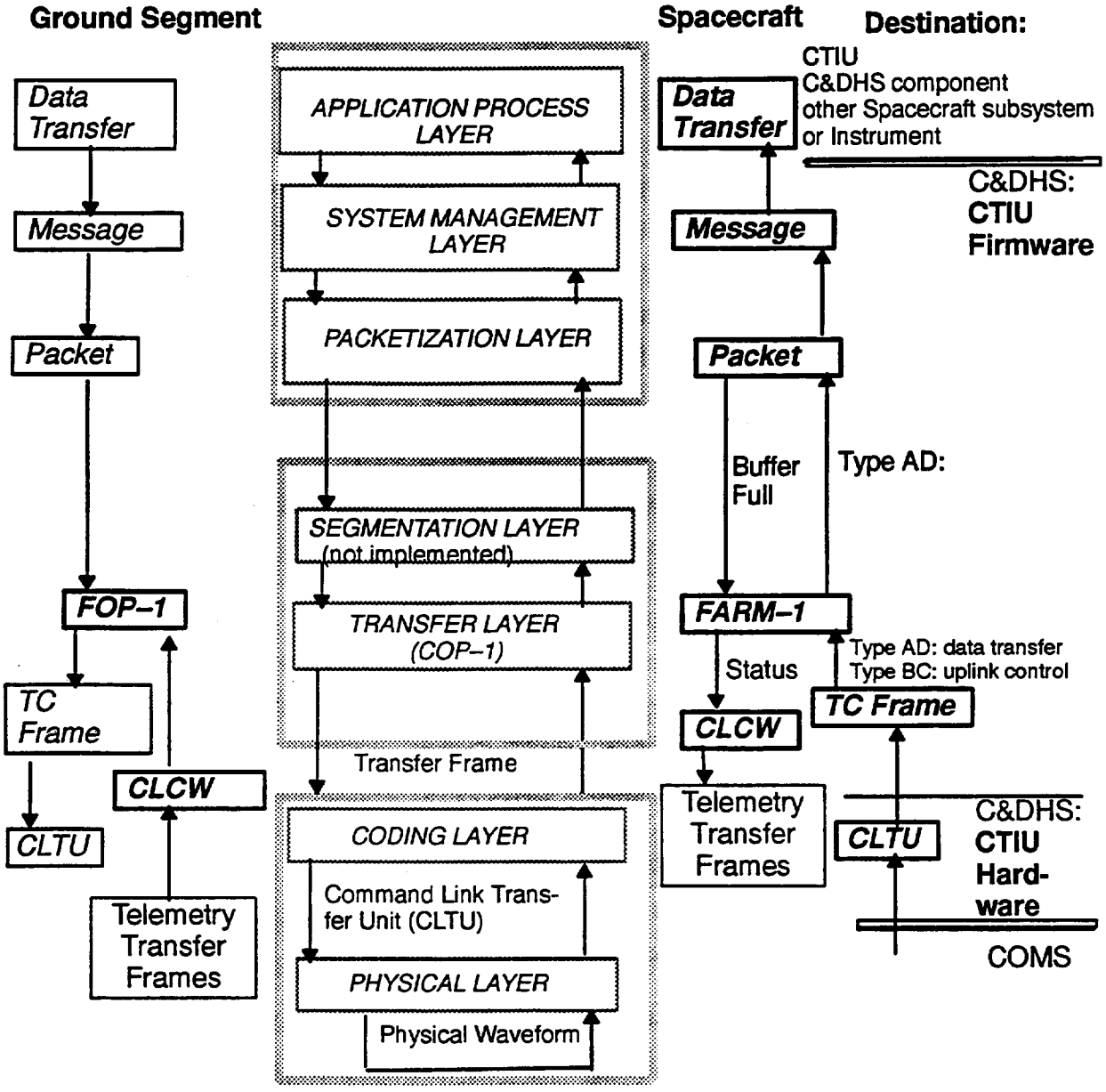

Figure 7–6. CCSDS Layered Protocol

The distribution rate for uplinked command data transfers (i.e., command or data load) is defined by the bus utilization table. It is 32 uplink command data transfers every 1.024 seconds or 1 uplink command data transfer every 32 milliseconds.

The number of bits of an uplink command data transfers varies. This variance ranges from 4 to 66 octets or 2 to 33 16–bit data words. The rate of uplink is greater than the rate of distribution if a sustained burst of uplink command data transfers at 4 or less data words in the application data structure were transmitted at the 10 kbps data rate. The maximum uplink command rate is one command at a minimum of 10 kbps every 27 milliseconds.

The active CTIU distributes commands to an instrument from multiple sources. The command sources are real–time ground commands, onboard stored commands (absolute and relative time), and autonomous Fault Detection Isolation and Recovery (FDIR) commands which include TMON. These commands may be interleaved such that an instrument stored command sequence can be active when the ground issues a real–time command, and the Spacecraft Controls Computer (SCC) issues a TMON response to the instrument. The C&DHS will deliver the commands from a command source in the order the C&DHS received it from the command source. The C&DHS will continue to deliver commands it successfully received to the instrument even when preceding commands to that instrument failed.

The instrument must accommodate this "multi–tasking" environment or rely on operational procedures to prevent difficulties. The following text acquaints the reader with the operational viewpoint of each individual command stream.

7.2.1 Point–to–Point Commands

Point–to–point commands are delivered via the BDU. The BDU will not provide commands to the instrument on both primary and redundant channels simultaneously. BDU commands are the relay drive commands. Point–to–point command interfaces are relay drive commands and are intended for power ON/OFF and reconfiguration purposes.

7.2.1.1 Spacecraft Required Point–to–Point Commands

In the point–to–point commands allocated to the instrument, power switching and reconfiguration of redundant subsystems must be included.

7.2.1.1.1 Instrument Operational Equipment ON and OFF Commands

The Spacecraft Provider requires the ability to turn the operational equipment ON and OFF. This will be accomplished via the relay drive commands. The normal mode provides operational power which may be further allocated via relay drive commands.

7.2.1.1.2 Instrument Survival Equipment ON and OFF Commands

There must be separate power "ON/OFF" commands for survival modes. The survival power is typically used for survival heaters.

7.2.1.2 Instrument Point–to–Point Commands

The remainder of the point–to–point commands are used to provide the ability to reconfigure the instrument (e.g., redundancy management) and to support recovery and diagnostics in the event of instrument functional difficulties. The commands required are listed in the C&T ICD.

There must be a 110 millisecond time delay between relay drive commands to the same BDU to assure the relay drive has completed the current command activity, including power supply recovery, before processing the next relay drive command. As a result, it is possible to send relay commands to the Spacecraft faster than they can be executed, assuming consecutive relay pulse commands to the same BDU.

7.2.1.2.1 Instrument Fault Recovery

Point–to–point commands are pulsed commands which can be utilized in support of FDIR by means of redundancy management. Depending upon the instrument design, these commands can be used for reconfiguration of redundant subsystems to allow problem diagnosis and restoration of operability. As a minimum the commands should permit selection of redundant RTs and transceivers.

7.2.1.2.1.1 Instrument Fault Isolation

Point–to–point commands will be used for instrument FDIR because this external access permits FDIR flexibility in isolating failed component sets.

7.2.2 Command and Telemetry Bus Commands

The instrument will receive all of its real–time commands and SCC commands via the C&T bus. These will be scheduled based on the bus utilization table depicted in Figure 6–10.

Two operational tasks, memory dump and memory load, may entail multiple commands in a particular sequence. All other commands available to the instrument are issued as a single entity and do not entail a protocol beyond that required to transmit the command itself, defined by the standard 1553B message exchange protocol. While the Spacecraft may be capable of supporting instrument–unique command protocols, the ground segment may not. Instruments are encouraged to comply with the standard protocols defined in the GIIS. Any exceptions will be documented in the instrument C&T ICD.

Commands are transferred to the 1553B RT hosted by the instrument via the C&T bus by the 1553B BC. An instrument's RT may receive the same 1553B message more than once within a minor cycle of the bus utilization schedule due to a retry (retransmission) of the 1553B message by the BC. Any retries will occur immediately (no intervening commands to this RT) and will be completed before the end of the minor cycle.

7.2.2.1 Real–Time Commands

The C&DHS will provide a real-time command service such that:

a. Real-time commands received from the ground are given the highest priority for execution; commands will be delivered within 1.024 seconds of receipt by the CTIU.

b. All real-time commands are executed in the order in which they are received.

c. The SCC does not participate in real–time command execution to insure the processing of commands when the Spacecraft is in safe mode.

d. All commands can be executed in real–time.

The Spacecraft Bus does not restrict issuance of other commands to the instrument while the instrument is processing a memory load or dump. Such restrictions, if required by the instrument, must be implemented as an operational procedure. There can only be one ongoing memory dump (instrument or Subsystem) activity on the Spacecraft at one time.

7.2.2.1.1 Memory Load Initiation

Memory loads are expected to be used for a data table or software modification or program loads. The memory load commands are always real–time commands. The instrument is to define the memory load commands for its own internal use. The memory restrictions are: (a) available spare instrument RAM, (b) allocated spare instrument RAM, and (c) TRDSS contact time.

If the instrument chooses to implement the memory load function, then the instrument must support the ground software requirements for entering and processing the load, the timely movement of the data to and from its RT, and supporting the parameters associated with the memory load sequence.

In the example described below, the ground software will generate: (1) a single initiate load command which contains the necessary parameters for memory load function that is transmitted as single message to the Spacecraft and (2) one or more (depending on the size of the memory load) subsequent messages containing the memory load data.

Memory loads will be initiated by a "load initiate" command to configure the instrument to receive the load data. The command provides the option to load data at either an absolute or relative address of the instrument processor and can be used to transmit the ground generated cyclic redundancy check (CRC) or checksum value or some other technique to be used for onboard load integrity verification, if desired.

The use of a CRC or checksum for memory loads eliminates the need to dump the load data for an integrity check. The CRC, though optional, is highly recommended and can be used in two ways. The first allows the processor to verify the integrity of the load onboard and to begin using the load data immediately after the load has completed. The second provides an "enable or inhibit" function that prevents the use of the load by ground command if the integrity of the load cannot be verified. The instrument should insert a CRC good or bad indicator in the telemetry. The instrument also has the option of generating a checksum or verification code onboard while loading the data and inserting this value in instrument telemetry to be verified on the ground.

Operationally, it is prudent to organize large loads into blocks. This may require a small amount of additional overhead but eliminates the need to re–transmit the entire load should there be noise or a dropout that corrupts the load data. While no attempt has been made to recommend a memory load block size, it is worth noting that roughly 32K words of data can be loaded in one minute.

Table 7–1 contains each command in the memory load function and defines it.

TABLE 7–1. Memory Load Commands

Command	Definition
MEMORY LOAD INITIATE	Provides the parameters necessary to perform a memory load.
MEMORY LOAD DATA	Supplies a segment (maximum of 32 words) of data.
RESET MEMORY LOAD STATE	Places memory load logic into an inactive state. Provides a reset capability should problems prevent proper termination of a previously initiated load

Memory Load Sequence

A memory load sequence is described below. The commands seen by the instrument (e.g., MEMORY LOAD INITIATE, MEMORY LOAD DATA) are capitalized. The expected processing by the instrument is listed under each command. The data load rate is controlled by the ground.

There will be a minimum delay (**TBD**) established by the instrument and controlled by the ground to allow time for the instrument to process the MEMORY LOAD INITIATE and each subsequent MEMORY LOAD DATA command. The ground can command a reset of the memory load state at any time during this process. The following is the recommended sequence of events:

1. MEMORY LOAD INITIATE (specifying the command subaddress), also the data rate adjustment.
   a. confirm memory load flag not active, set active.
   b. apply relative or absolute address for start, and 32 word increments.
   c. retain start and end address for limit check.
   d. retain CRC (if included), and expected word count.
2. MEMORY LOAD DATA (specifying load subaddress).
   a. maximum 32 words loaded into subaddress area.
   b. perform only if memory load flag is active.
   c. increment word count and perform limit check.
   d. transfer data from subaddress area to destination.
   e. if last message, compute and compare CRC and reset Memory Load flag.
   f. else, calculate base address for next load.
   g. A command to use data is instrument unique. Software revision may add further processing steps.
3. RESET MEMORY LOAD COMMAND

   Informs the instrument the remaining expected Memory Load Data commands will not be sent and resets the memory load active state maintained by the instrument.

The instrument must move the load data from the subaddress area before another write by the instrument's RT to this storage area occurs.

7.2.2.1.2 Memory Dump Initiation

The memory dump commands are always real–time commands. The ground software will generate a single message to the Spacecraft called the memory dump initiate command which contains the necessary parameters for the memory dump function. The instrument has the option to implement this command.

If the instrument implements the memory dump function, then the instrument must support the ground software requirements for entering and processing the dump commands, the timely movement of the data to and from its RT, and supporting the items described subsequently in the memory dump sequence. Memory dump data must be available before the start of the minor cycle in which the retrieval command from the BC is scheduled. Memory dump data must also be transmitted successfully before this storage area is written to again. Because of retries, the dump data should remain available for the entire minor cycle during which it is being transferred to the Spacecraft.

Memory dumps will be initiated by a dump setup command to prepare the data source to transfer the dump data. The data in the command must contain a command identifier which is uniquely identified by the instrument as a dump command; it must also convey the start and end points of the dump. Additional parameters can be used to further differentiate memory dump types, such as absolute address versus relative address.

Once the instrument has been configured to transfer the dump data, a ground command to the active CTIU will result in the CTIU managing the dump data transfer from the instrument to the active CTIU. The active CTIU allows a memory dump operation to proceed only if configured for a diagnostic down link. The CTIU permits only one memory dump operation at any one time on the Spacecraft. The active CTIU begins to issue memory dump gather requests in the master cycle subsequent to the one in which it received the CTIU initiate memory dump command. The memory dump gathering operation terminates whenever either the last diagnostic gather request is issued to the User, or upon command to reset the memory dump flag in the active CTIU.

The ground command to the CTIU will consist of the C&T Bus address of the instrument's RT, the RT subaddress reserved for dump data, the number of 16–bit 1553B data words for 1553B transmit command to gather for each dump gather except the last time, the number of 16–bit 1553B data words to gather for the last dump gather, and the frequency to gather the data.

The rate at which 1553B transmit commands (dump data gather requests) are issued by the CTIU will depend on the instrument dump rate capability, the bus utilization table and the data flow control management of the dump (diagnostic) downlink which can be either 16 kbps or 1 kpbs. The maximum rate the CTIU will gather data from the instrument is no sooner than every 6 minor cycles. The minimum memory dump gather rate is once every

128 minor cycles. The data gather request rate is the same within a single memory dump operation. The ground can issue commands to both the CTIU and to the instrument to terminate the memory dump operation.

The active CTIU will do the data flow control for the instrument. The instrument fills the C&T RT subaddress reserved for memory dump data with the first dump. The instrument does not fill this area again until the instrument's C&T RT transmits this data to the active CTIU as the result of a dump gather request from the active CTIU. The soonest the instrument can fill the C&T RT memory dump subaddress is minor cycle N+2 where the data was gathered in minor cycle N. The latest the instrument can fill the C&T RT memory dump is no later than minor cycle N – 2 where the next dump gather request is expected in minor cycle N.

The instrument is expected to dump 32 16–bit data words each time until the last memory dump. The last memory dump can be from 1 to 32 16–bit data words. The data format of the memory dump block is as transmitted by the instrument.

The active CTIU prepares the diagnostic packet for transmission via the downlink. The application data field for dump data consists of: (a) RT address of the instrument, (b) number of octets of dump data present, (c) dump data, (d) application fill data, and (e) valid data indicators **(TBD)**. The active CTIU maintains the diagnostic link, once it is configured, by transmitting packets on the downlink whether there is a memory dump operation ongoing or not.

There is no restriction on any other instrument operation while the dump is in progress. However, to minimize confusion, it is recommended that no other operation be planned for the component being dumped while the dump is in progress.

Table 7–2 contains of each command in the memory dump function and defines the command.

TABLE 7–2. Memory Dump Commands

Command	Definition
MEMORY INITIATE DUMP	Provides the parameters necessary to perform a memory dump.
RESET MEMORY DUMP STATE	Places dump logic into an inactive state. Provides a reset capability should problems prevent proper termination of a previously initiated dump.

Dump Commanding Sequence

A memory dump sequence is described below. The command seen by the instrument is the MEMORY INITIATE DUMP. The expected processing by the instrument is listed under this command. A parameter included in the MEMORY INITIATE DUMP command will select from a fixed set of alternative data dump rates. The instrument is not required to implement a memory dump capability nor react to the MEMORY INITIATE DUMP command exactly as outlined below.

1. MEMORY INITIATE DUMP, to include data rate parameter, if needed by the User; however, the active CTIU does the data flow control on a dump operation).

   a. confirm Dump not active, set Dump to active.

   b. calculate number of 32 word messages, plus remainder, and the associated physical addresses to be read (may involve relative addressing).

   c. fill subaddress area with message.

   d. wait until message transmitted by RT.

      1) 1553B transmit command (addressing dump subaddress).

      2) at minor cycle completion, instrument refills subaddress area (schedule guarantees at least a full minor cycle between reads).

   e. repeat until dump completed (word count compare).

   f. reset Dump bit to not active.

2. RESET MEMORY DUMP STATE

   Informs the instrument the remaining expected Memory Dump Data gather commands will not be sent and resets the memory load active state maintained by the instrument.

The ground can command a reset of the dump state at any time during this process.

7.2.2.2 Stored Commands

A time-based stored command execution capability is required. This will be accomplished by using Absolute Time Commands (ATC) and Relative Time Commands (RTC). The relative time commands will be organized into groups of commands known as Relative Time Command Sequences (RTCS). Stored commands are loaded into the SCC using a

memory load command sequence by the ground during an EOS–AM contact period. The RTCS are typically static and do not require reloading on a regular basis, as opposed to ATC's which must be loaded at least once per day. For instruments, the intended use of the SCC–hosted stored commands is to control instrument operations which alter Spacecraft Bus resource demands; examples are output data rate changes and Direct Access System (DAS) use.

The nominal operational procedure will uplink a stored command table load once every 24 hours. The onboard storage for the stored command table has been reserved to accommodate a worst case command load with margins for a one day of operation. The worst case command volume for a single day is estimated at 30 kbytes (3000 commands at 5 words each) for both instruments and Spacecraft Bus. It is estimated the instruments would require approximately 1800 of the 3000 commands. Storage reserved for relative time commands is 8192 words (16 bits each). This equates to 2048 commands at 4 words per command or 15K words.

The nominal TDRSS contact times with the Spacecraft is approximately 20 minutes per orbit, so editing of the stored command table to allow individual commands to be inserted into, or deleted from, the middle of the table is not required. Uploading of the entire table from the point of the change to the end of the table is an acceptable and flight proven means of incorporating changes (such as target-of-opportunity commands) into the stored command table (SCT) load. This procedure is called a stored command table load.

The FSWS will provide a stored-command management service such that:

a. A total stored command table capacity of 3000 or more commands is provided.

b. Each command in the table has an associated unique time tag with a resolution of 1.024 second, and a range sufficient to cover at least 2 days, which permits a single SCT to cover more than 24 hours as long as it fits within the SCT storage constraints, before rolling over.

   Note: A maximum of 8 commands may have the same time tag (**TBR**). This assumes a storage capacity of 3000 commands.

c. The stored commands in the table are ordered in the intended execution sequence.

d. The table is organized as a list such that commands for later execution may be appended starting at any entry while processing commands for current execution continues.

e. A pointer into the table indicating the entry next scheduled for issuance is capable of being monitored in critical health and safety telemetry not less that once every ten seconds.

f. Each command has an associated inhibit identification (ID).

g. Each command is dispatched within 1.024 sec of the Spacecraft clock reaching the tagged time if the associated inhibit ID is not set.

h. A command is never dispatching if the associated inhibit ID is set.

i. Commands which are not inhibited are always dispatched in the order in which the time tags occur.

j. No stored command is ever issued again after the Spacecraft clock time progresses beyond the tagged time.

k. All stored command dispatch is capable of being inhibited upon receipt of a ground command to do so.

l. Upon entry of the Spacecraft into survival mode or safe mode, a selected group of inhibit IDs is activated to prevent stored commands from adversely affecting the Spacecraft configuration.

m. The subsequent SCT upload is expected to occur before the last command is executed. In case this is not done, the last command contained within the SCT is always a "go to safe–mode". The next SCT upload always replaces the last command of the preceding SCT if it has not yet been executed.

All absolute time commands and relative time command sequences can be inhibited. Inhibiting can be used to prevent instrument mode changes in the event a problem is detected or a decision is made on the ground to suspend a scheduled event after the stored command information has been loaded into the SCC.

The SCC will maintain "Inhibit IDs" for use in the control of stored command execution, such that:

a. A minimum of 64 individual inhibit IDs be provided.

b. A single ground command may set or clear any individual inhibit ID.

c. On-board applications software (such as FDIR and telemetry monitor software) may set any individual inhibit ID.

e. The status of each inhibit ID appears periodically in health and safety telemetry not less than once every 8.192 seconds.

The structure of stored commands is shown in Figure 7–7 . The ATC structure consists of the command destination information, the command description information and the command data, if any. Definition of the command description word for instrument commands is **TBD**. Also associated with each command is the 8 bit inhibit identifier discussed previously. The actual command information is the same as that described for real–time commands.

7.2.2.2.1 Absolute Time Commands

These commands may be discretes or serial. Commands may invoke an RTCS. The absolute time stored command list will be structured as a single list, encompassing both Spacecraft Bus and instrument commands. Absolute time command entries are limited to a maximum of two data words as shown in Figure 7–7.

7.2.2.2.1.1 Absolute Time Command Time Tag Resolution

Time tags have a resolution of 1.024 seconds.

7.2.2.2.1.2 Absolute Time Command Distribution

All stored ATCs are distributed from the SCC. ATCs are distributed when the time tag associated with the command is equal to Spacecraft time. The command will be delivered within 1.024 seconds of the designated time.

7.2.2.2.1.3 Absolute Time Command Time Tag Uniqueness

There may be up to 8 commands with the same time tags.

7.2.2.2.2 Relative Time Commands

RTCs are organized into an RTCS and stored in the SCC, which are then referenced by RTCS number. An RTCS is useful for performing the same activity on a routine (i.e., orbit by orbit) basis.

A service will be provided for instruments to issue pre–defined command sequences in support of mode changes which alter demands on Spacecraft resources, or in support of FDIR. Operations and command table sizing benefits may be derived from hosting certain frequently-repeated command sequences on board for execution in response to a single trigger command.

7.2.2.2.2.1 Relative Time Sequence

The C&DHS will provide an RTCS commanding service, such that:

Absolute Time Command:

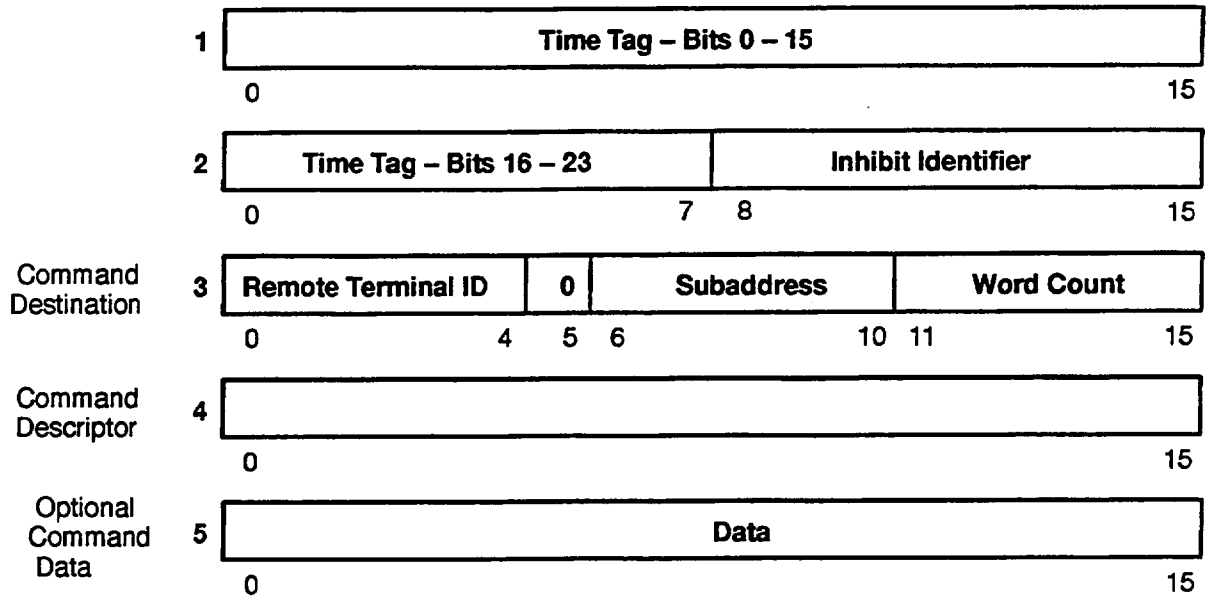

Relative Time Command:

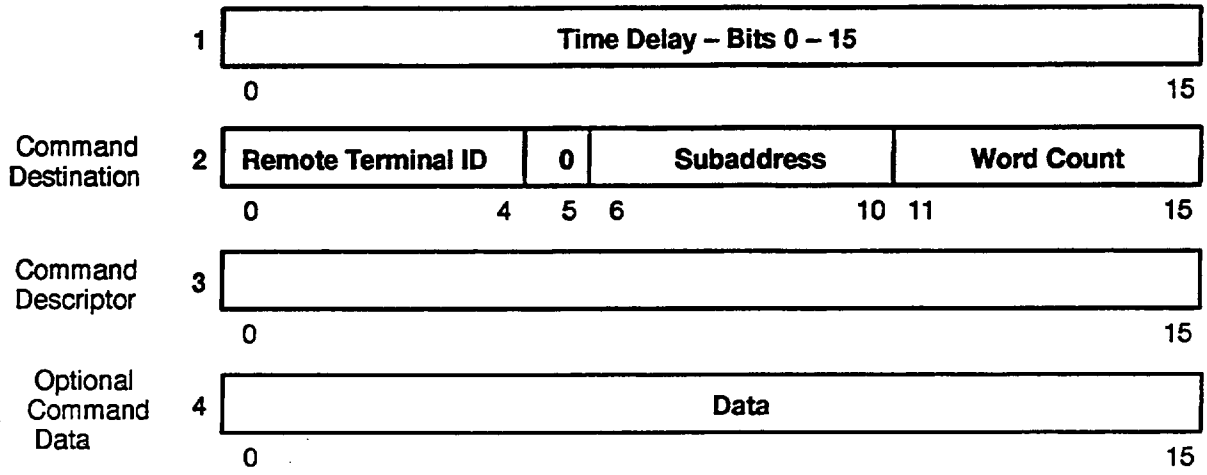

Relative Time Command Sequence:

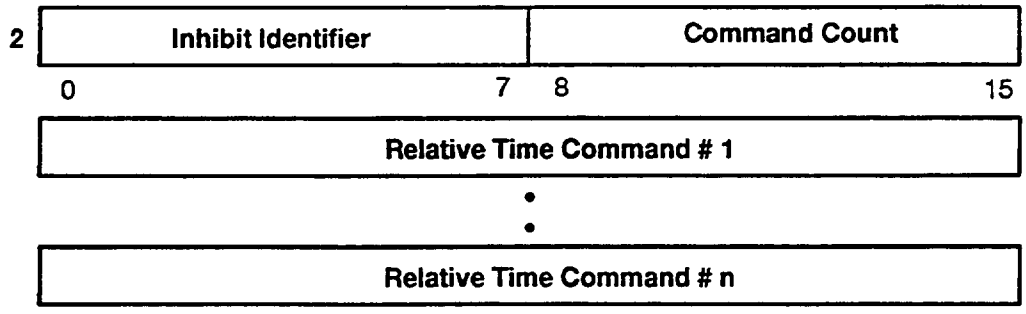

Figure 7–7. Stored Command Structures

a. The RTCS service provides for at least 128 separate relative-time command sequences.

b. Any individual RTCS may be any length up to 16 commands.

c. A total RTCS capacity (for all sequences stored on board) of 2048 commands is provided.

d. The RTCS's are invoked either by an absolute time command, a real–time command, another RTCS or an SCC function such as telemetry monitoring.

e. Multiple RTCSs may be active concurrently.

f. The action of an RTCS is inhibited if an associated inhibit ID is set (by realtime TMON or stored command) before or during execution of the RTCS.

g. The RTCS service may be enabled and disabled via command.

h. The activity status, enable status, and inhibit status of each RTCS sequence is provided in telemetry.

7.2.2.2.2.2 Relative Time Sequence Distribution

With a RTCS, a single ATC, or real–time command can invoke all of the commands contained in the RTCS. The recommended method of implementing cyclical processes is to create an RTCS consisting of the processes' commands, and use absolute time stored commands to activate. TMON, another RTCS, or other FDIR functions may also invoke an RTCS.

7.2.2.2.2.3 Relative Time Sequence Distribution Timing

The commands in the RTCS are separated in time by a time delay associated with each command. Multiple relative time sequences may be active concurrently. A command sequencing function will accommodate multiple commands which are scheduled for execution at the same time. Priority is given to a command which has been waiting the longest to execute.

7.2.2.2.2.4 Relative Time Command Time Delay

The relative time command sequence has a resolution of 1.024 seconds. The minimum delay is 0 seconds. The maximum delay is 65,535 seconds.

7.2.2.3 Spacecraft Control Computer Issued Commands

The instrument is required to execute the following commands:

a. IMOK Message indicating both the health of the SCC (SCC OK message to CTIU) and CTIU.

b. Safe–Mode Command.

d. Instrument Survival Mode Commands.

7.2.2.3.1 Telemetry Monitor Commands

The SCC will monitor designated telemetry from the normal housekeeping telemetry data stream. The SCC is capable of invoking an action when a telemetry point or combination of telemetry points expressed as a TMON fails to satisfy certain conditions.

A TMON definition consists of one or more telemetry points arranged in an IF–THEN–ELSE construct using relational operators (e.g., <,>,=,<>, etc.) and logic operators (AND, OR, NOT) to compare telemetry points to numeric values. Based upon the results of the comparison, a specific action is performed. This action can be no action, a Spacecraft command, or a command to activate an RTCS.

The execution of each TMON is controlled by several parameters. The first defines whether or not the TMON is to be processed. The second defines whether or not the TMON is permitted to initiate an action. The third parameter specifies the rate at which the TMON is to execute (i.e., every 1.024 seconds, every 2.048 seconds, etc.). The final parameter specifies the execution phasing if it is not being executed on 1.024 second increments.

7.2.2.3.2 Instrument Telemetry Monitor Commands

The instrument will define its TMONs. The instrument may use its serial telemetry, the BDU telemetry and/or Spacecraft telemetry for an instrument TMON. The maximum number of telemetry points in a single TMON is (**TBD**). TMON is a limited resource whose use is allocated among the instruments.

7.2.2.3.3 SCC OK Indication and Safe–Mode Command

7.2.2.3.3.1 SCC OK Indication

SCC OK is a message from the active SCC to the active CTIU. The IMOK message will be issued once per major cycle to the instrument by the active CTIU if and only if the CTIU received an SCC OK message. The instrument will enter safe mode autonomously if it has not received and successfully processed this SCC generated message within 5.12 seconds after the last good "SCC OK" message. The instrument may also receive a 1553B message containing a safe–mode command. The instrument should respond identically to either safe mode path.

7.2.2.3.3.2 Safe–Mode Command

Multiple safe–mode related commands will be expected to be executed by the instrument. One command will enable safe–mode time out; the other will disable it. Enabling safe–mode time out allows the instrument to autonomously go to safe–mode if it hasn't received an SCC OK signal. The disable prevents entry into safe–mode and is intended for use during I&T. Another command is the "go to Safe Mode" command issue by FDIR software or the ground. This command will be part of a command string issued to the instruments which distinguishes among multiple safe mode levels for which the SCC is active.

7.2.2.3.4 Instrument Survival Mode Commands

The instrument needs to define a command or command sequence which will be stored onboard as an RTCS, and activated to transition the instrument to survival mode. Due to power availability constraints, this command sequence should be as short as possible. The Spacecraft will provide only survival power to the instrument after a **TBD** period of elapsed time which will be negotiated with the instrument on an individual basis. This will be defined in the instrument ICD. Instrument Survival Mode Commands will not be able to be transmitted to the instrument if either the SCC or CTIU failed. If possible, the instrument should reflect its command receipt and key points in the survival mode configuration change in its telemetry. The command sequence will reconfigure the instrument into a non–operational and heat conserving configuration. The critical health and safety telemetry must reflect this configuration change.

7.2.2.4 Interface Selection

A command for Spacecraft interface selection by the instrument and/or BDU will be the same command format and content regardless which instrument or BDU is designated to execute it. The command response time is expected to be the same for every recipient of the command. The configuration change needs to be reflected in telemetry.

7.2.2.4.1 Time Mark and Frequency Bus Selection

The instrument should be designed to receive a 1553B message containing a command to select either the A or B bus for the Time Mark and Frequency bus. Upon receipt of this command, the instrument has **TBD** time to implement a bus switch.

7.2.2.4.2 Redundant High–Rate Link Selection

The instrument should be designed to receive a 1553B message containing a command to select either the A or B point–to–point channel for high–rate science data. Upon receipt of this command, the instrument has **TBD** time to implement an interface channel switch.

7.2.2.5 High–Rate Link Test Command

7.2.3 Instrument Command Documentation

The C&T ICD will be the definitive document for all instrument commands. The command structure, naming, usage and other needed instrument command information will be found in this document.

7.2.4 Command Requirements

7.2.4.1 Command Uniqueness

The effect of each instrument command should be the same in any mission phase or mode for which it is meaningful, and the command should have no effect (other than, if appropriate, causing an error indication) in any mission phase or mode in which it is not meaningful.

7.2.4.2 Critical Commands

Critical commands are those commands which cause irreversible actions on the Spacecraft, commands that place the Spacecraft in a dangerous condition, and commands that, if out of sequence, may place the Spacecraft in an undesirable mode. It is assumed that use of critical commands will be restricted by ground software and operational procedures. The Spacecraft will not screen and decode uplinked commands for special processing.

7.2.4.3 Command Sequence

Instrument command designers must assure the health and safety of the instrument. Any commanding operation, whether it be a single command or a command sequence, should never endanger the health and safety of the instrument itself.

7.2.5 Command Restraints

The following describes command types for which there are certain restraints.

7.2.5.1 Toggle Commands

Toggle commands are not permitted. These commands reverse the state of an object. Thus knowledge of the existing state is required to determine the command effect.

7.2.5.2 Command Format Consistency

A command will have the same format for every mission phase and every instrument mode for which the command is applicable. This minimizes command interpretation tasks on orbit and simplifies ground interpretation and monitoring of events.

7.2.5.3 Multifunction Commands

Multifunction commands may change the state of more than one discrete condition. Each state of a discrete condition will be uniquely coded. Each state of a single discrete condition will be capable of being changed via a single unique command which is not a multifunction command.

7.3 Telemetry

The 1 kbps critical health and safety and 16 kbps normal housekeeping telemetry are composed of Spacecraft Bus and instrument telemetry. The critical health and safety telemetry also appears in the normal housekeeping telemetry. The telemetry format must be the same in all modes, except OFF.

Instrument telemetry is transmitted via the BDU (point–to–point) or via the embedded RT (serial) over the C&T Bus to the active CTIU. Transfer is scheduled in accordance with the overall bus utilization table defined in Section 6.

The telemetry will be sampled according to the current telemetry sampling schedule local to the instrument. This sampling schedule should be modifiable (see Section 7.3.3.8 for C&T Bus Transfer Schedule Adaptability). Sampling schedule information consists of:

a. identifying the telemetry point to be sampled.

b. telemetry point data type.

c. when to sample the telemetry point.

   This is kept track of by the instrument. Periodically, a synchronize–with–data–word 1553B message is transmitted by the BC to the instrument RT to assure synchronization of minor cycles between the instrument and the CTIU. If there is a difference between the two, then the instrument minor cycle counter is changed to reflect the CTIU. The instrument telemetry should contain information indicating this problem occurred. Section 6 discusses resynchronization.

d. If the data point sampled in this instance need appear in both the critical and normal housekeeping telemetry, or just the normal.

The schedule will be organized in a chronological order based on the sample time. The data collected must be completed no later than the beginning of the minor cycle which contains the CTIU's expected gathering message. For instruments whose sample time varies with regard to the collection minor frame, a sampling time stamp is recommended within the data (TBR).

The instrument is expected to provide both the normal housekeeping and critical health and safety housekeeping telemetry as separate telemetry streams. Data which appears in both telemetry categories must be placed in both streams by the instrument.

The individual instance of a telemetry buffer must be ready to be transferred to the Spacecraft in advance of the minor cycle of the bus utilization schedule containing the transfer activity. The instrument must not overwrite that telemetry buffer until after the minor cycle is completed. This is done to avoid the problem of retries where the BC can request a retransmission of the telemetry buffer within a minor cycle containing the transfer activity. The instrument may implement alternating storage areas associated with the RT subaddress assigned to a telemetry stream. In general, a 24 millisecond window is recommended where the data is unchanged.

To gather telemetry, the CTIU creates a 1553B transmit command message to the RT. This 1553B message will be included in the upcoming minor cycle and will be transmitted by the CTIU's BC to the designated RT via the C&T bus. The 1553B message contains the RT bus address, the RT subaddress where the instrument telemetry is located and the number of 16–bit 1553B data words expected by the BC in the 1553B message transmitted by the RT to the BC. After the minor cycle is complete, telemetry data gathered from the instrument RT is placed within a packet conforming to the CCSDS recommendation for Advanced Orbiting Systems defined in reference 1 in section 7.2. Included in this packet will be data collected from the BDU, other instruments, and Spacecraft subsystems.

The CTIU Computer gathers Spacecraft housekeeping telemetry, health and safety telemetry, and diagnostic telemetry and packages the telemetry data into CCSDS Version–1 packets. This is the "packet assembly" depicted in Figure 7–8 . The packets are inserted into partial Channel Access Data Units (CADUs). This is the "frame assembly" depicted in Figure 7–8. The partial CADUs are passed on to the CTIU hardware. The assembly of the CADUs is completed by the CTIU hardware for subsequent transmission over the downlink path. The telemetry involved in this process is periodically sampled and included in the downlink CADUs.

Only the housekeeping telemetry is distributed to the SSR for recording and later playback. The replay flag in the Virtual Channel Data Unit (VCDU) header set to replay for recorded data prior to recording. The SSR playback of housekeeping telemetry via the S–band transponder is not part of the nominal operations of the Spacecraft.

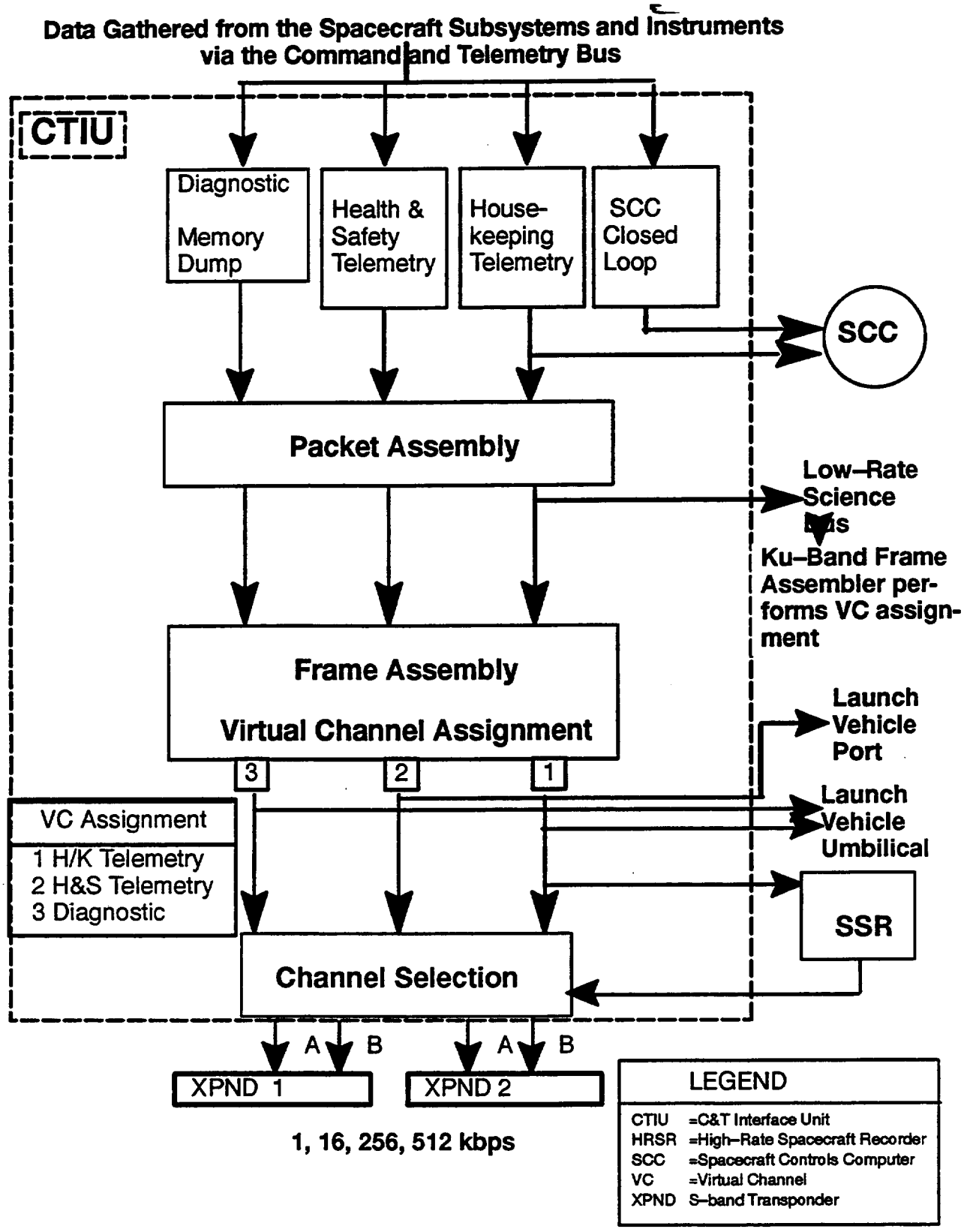

Figure 7–8. Data Gathered and Virtual Channel Assignment

The CTIU simultaneously passes CADU serial data blocks to both S–Band transponders (S–Band 1 & 2). The 16 kbps telemetry can be passed to one of the transponders for downlink through the High Gain Antenna (HGA) and 1 kbps health and safety (H&S) telemetry is passed to the other transponder for downlink at a lower rate through the omni antenna. Additional options are diagnostic data and SSR playback of the telemetry data.

The CTIU passes CADU serial data blocks to the SSRs for temporary storage (record) and also receives the CADU serial data blocks from the SSRs (playback) and passes them on to the appropriate S–Band transponder.

During ascent, the CTIU passes Health and Safety Telemetry CADU serial data blocks with clock to the launch vehicle.

During I&T and GSE use, the CTIU passes CADU serial data blocks (clock is embedded in the data) to the launch vehicle umbilical over two interfaces. The data for the serial data blocks is 16 kbps, 1 kbps, or previously recorded telemetry playback.

The active CTIU is continuously performing the gathering of the telemetry data and the telemetry packet formatting. The hardware completes the remaining frame assembly on the start of downlink telemetry (see Figure 7–8). An enable telemetry CTIU configuration command shall start the downlink telemetry. When the active CTIU receives the enable command, the first CADU of a telemetry packet shall begin at the next possible master cycle boundary and thereafter all CADUs shall be continuous and contiguous. A disable telemetry CTIU configuration command shall stop downlink telemetry. The telemetry gathering of a block of data from a C&T RT, formatting of a housekeeping packet, and ground segment decomposition of the packet are shown in Figure 7–9.

Housekeeping telemetry, health and safety telemetry and diagnostic telemetry are supplied by the active CTIU continuously and contiguously upon command. The active CTIU will provide CCSDS packets for the 16 kbps and 1 kbps downlink rates. The first CADU shall contain the packet header. A complete 16 kbps data stream packet is transmitted every 1.024 seconds. Table 7–3 describes S–band real–time telemetry characteristics for each data rate.

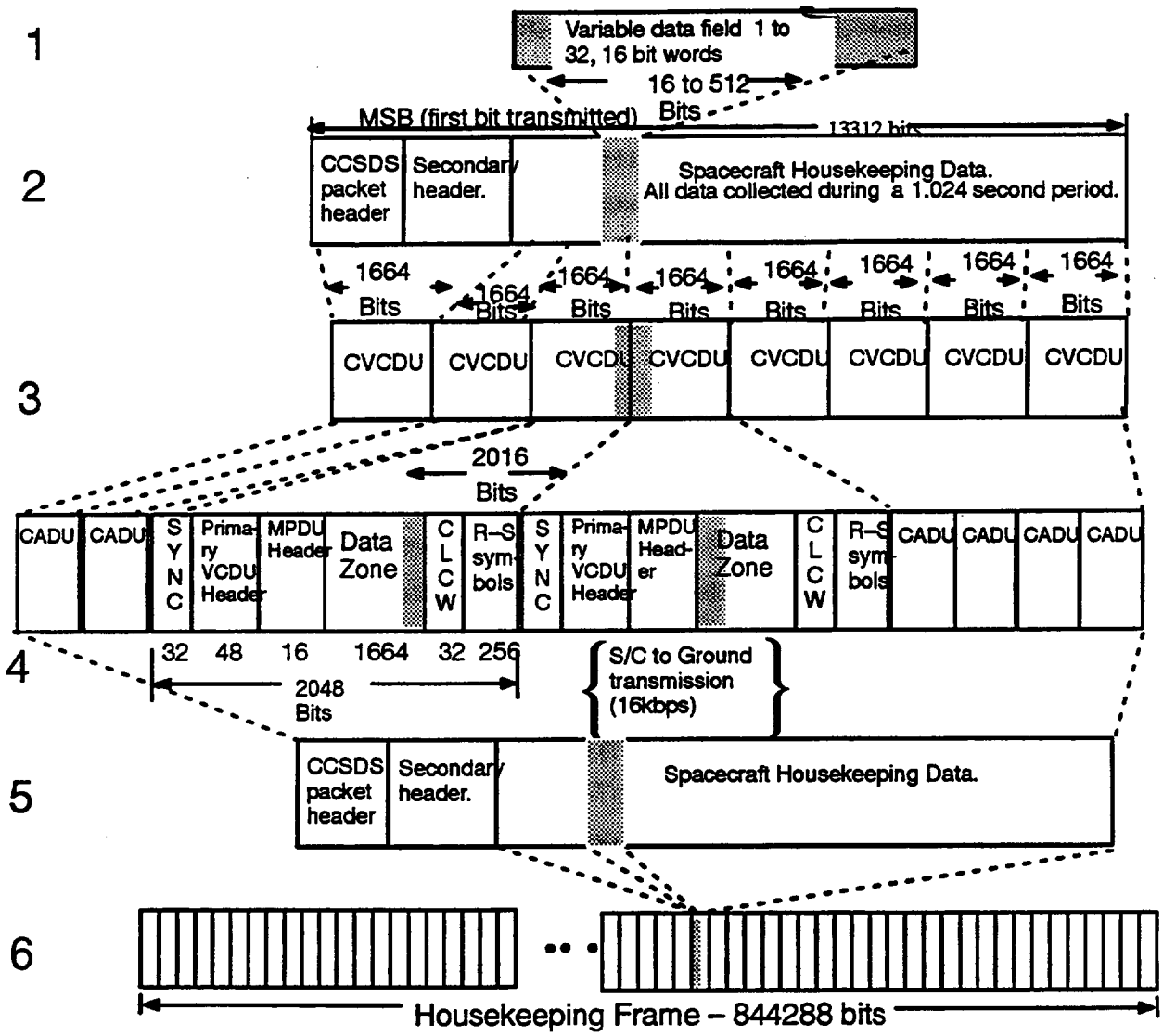

(1) RT/BDU transmits Housekeeping data returned to the CTIU in response to a data gather request from the active CTIU to a C&T RT.
(2) A housekeeping telemetry packet with CCSDS Primary and Secondary Headers is added by the CTIU.
(3) Each housekeeping telemetry packet is broken into 8 Coded Virtual Channel Data Units (CVCDU)s by the CTIU. A VCDU header, a MPDU header, Command Link Control Word (CLCW), and R–S parity field is added.
(4) A sync field is added to the CVCDU to form a Channel Access Data Unit (CADU) for recording or transmission.
(5) The ground segment strips envelope and combines Data Zones to rebuild the housekeeping telemetry packet.
(6) The complete Housekeeping Frame contains the data from 64 individually formatted packets gathered during one Master Cycle.
Note, in (3) the block of gathered data is split between to CVDUs and rejoined in (5).

Figure 7–9. Housekeeping Telemetry

Table 7–3. S–Band Real–Time Telemetry

	16 kbps	1 kbps
Packet Size	1664 octets	208 octets
CADUs per Packet	8	1
CADU Size	256 octets	256 octets
Packet transmitted every	1.024 seconds	2.048 seconds
Number of Packets per Major Frame	64	32
Effective Packet data bit rate	13,000.00 bps maximum for a single packet	812.5 bps per packet

7.3.1 Point–to–Point Telemetry

Point–to–point telemetry is used for health and safety monitoring during all modes of operation. If the instrument is OFF, the BDU will still sample and gather instrument telemetry. The instrument C&T RT will still receive telemetry gather requests when it is turned off.

7.3.1.1 Instrument Status

The BDU will sample analog and bi–level signals to reflect instrument status. The sampling is performed in a fashion transparent to the instrument.

7.3.1.2 Required Point–to–Point Telemetry

Point–to–Point telemetry is used to reflect relay and equipment on/off status, temperatures, voltages and currents. The Spacecraft requirements on this telemetry are:

a. the telemetry must facilitate discrete command execution verification.

b. the telemetry must be sufficient for on–orbit instrument health and safety determination in all operating modes and in safe hold mode.

c. input current for each primary power input in all modes.

d. input voltage for each primary power input in all modes.

7.3.1.3 Instrument Point–to–Point Telemetry Sampling Rate

The sampling rate for most of the BDUs is expected to be every 8.192 seconds; however, depending on the telemetry, it may be sampled at a lesser or greater frequency.

7.3.1.4 Instrument Point–to–Point Telemetry Sampling Rate Definition

The BDU telemetry sampling will be decided by both the Spacecraft and the instrument so the needs of both will be satisfied. The sampling rate will be consistent with serial telemetry sampling recommendations (e.g., sampling should occur frequently enough to permit adequate time for intervention in case of a pending failure).

7.3.2 Command and Telemetry Bus Telemetry

7.3.2.1 Instrument Housekeeping Telemetry Types

In general, the instrument must provide telemetry which reflects current configuration and operational mode, allows for command execution verification, provides for health and safety monitoring, and provides FDIR. The following specific telemetry parameters are recommended:

a. Cyclic Counter – This will allow ground personnel to quickly identify certain problems and serves to validate received telemetry.

b. Instrument Busy – This signal indicates that the instrument is still processing the last command, including power on initialization. This would assist ground personnel during real–time commanding for such activities as initialization.

c. Minor Cycle Count Difference – If the synchronize–with–data–word contains a minor cycle count which differs from that which is maintained by the instrument, this should be reported in the telemetry.

d. Resynchronization Indicator – Indicates when instrument is in the processes of resynchronizing with the BC directed schedule. When set, all other telemetry is invalid.

7.3.2.1.1 Normal Instrument Housekeeping Telemetry

The instrument serial telemetry will reflect the instrument operating mode and associated parameters, configuration, and performance evaluation data. A small portion of this data will be classified as critical and appear in the critical health and safety telemetry. The critical health and safety telemetry data also appears in the normal housekeeping telemetry.

Figure 7–9 depicts the distribution of the normal housekeeping telemetry.

7.3.2.1.2 Critical Health and Safety Telemetry

During contingencies, only the critical health and safety telemetry may be transmitted via the downlink. Considering the limited bandwidth available, careful selection of data is required.

7.3.2.2 Instrument Telemetry Limits

7.3.2.2.1 Instrument Normal Housekeeping Telemetry Data Limits

The instrument will transmit to the Spacecraft 512 bits of normal housekeeping data every major cycle. This will be done as a single 1553B message. The instrument BDU data message size and gathering frequency is reflected in the bus utilization table. The critical health and safety telemetry will be documented in the C&T ICD.

7.3.2.2.2 Instrument Critical Health and Safety Telemetry Data Limits

The instrument will transmit to the Spacecraft 16 bits of critical health and safety housekeeping data every major cycle. This will be done as a single 1553B message. The instrument BDU data message size and gathering frequency is reflected in the bus utilization table. The critical health and safety telemetry will be documented in the C&T ICD.

7.3.2.3 Telemetry Monitor

7.3.2.3.1 Spacecraft Monitoring of Instrument Telemetry

A generic telemetry monitoring capability (TMON) will be developed. This capability allows for initiating an action based on a pre–determined telemetry state. It is table driven and, therefore, requires no modification to the flight software if modifications are required.

All telemetry states must be defined, even if they are unused or invalid. In addition, all telemetry states must be consistent among data types. If an implementation results in a particular state being telemetered as both a bi–level and a serial telemetry point, the meaning of the state must be the same for both.

7.3.2.3.2 Instrument Telemetry Monitoring Transfer Rates

The telemetry monitoring function can sample instrument telemetry at rates of once every 1.024 seconds, 8.192 seconds, and 65.536 seconds. The instrument may chose to provide data which had been sampled by the instrument at different data rates. This different rate could be factored into the monitoring logic.

7.3.2.3.3 Instrument Telemetry Word Format

All telemetry within a data word must repeat at the same time intervals (e.g., every 1.024 sec, every 8.192 sec).

7.3.3 Telemetry Interface Utilization Documentation

7.3.3.1 Instrument Point–to–Point Telemetry Documentation

All point–to–point telemetry will be documented in the instrument C&T ICD.

7.3.3.2 Instrument Point–to–Point Telemetry Sampling Rate Documentation

All point–to–point telemetry sampling rates will be documented in the instrument C&T ICD.

7.3.3.3 Instrument Housekeeping Telemetry Documentation

Normal housekeeping telemetry and critical health and safety telemetry will be documented in the instrument C&T ICD.

7.3.3.4 Instrument Housekeeping Telemetry Sampling Rate Documentation

All housekeeping telemetry sampling rates will be documented in the instrument C&T ICD.

7.3.3.5 Instrument Housekeeping Telemetry Format Documentation

All housekeeping telemetry formats will be documented in the instrument C&T ICD.

7.3.3.6 Instrument Telemetry Monitoring Documentation

Instrument telemetry monitoring procedures will be documented in the instrument C&T ICD.

7.3.3.7 Instrument Transfer Schedule Documentation

Instrument transfer schedules will be documented in the instrument C&T ICD.

7.3.3.8 Command and Telemetry Bus Data Transfer Schedule Adaptability

Changes to instrument telemetry would only be performed to assist in problem resolution after launch, or to support evaluations during Spacecraft integration and test. The following change procedure is not to be associated with instrument mode changes.

Telemetry changes may be of two types, either content or format. The format change makes a major revision to message size and/or gathering frequency. A format change must be implemented concurrently among all involved elements. Each element is potentially affected, so all changes must occur at the same time. Format changes potentially affect every instrument (serial interface and BDU), subsystem BDU, the CTIU and TMON. Due to the highly structured nature of telemetry collection, a change to the collection time or message length for one instrument could interfere with the previously established schedule for telemetry gathering from other instruments or Spacecraft Bus subsystems. The content change only affects message content, in terms of what is sampled and how frequently it is sampled, and does not change message size or collection timing. Content changes can be performed on an instrument by instrument basis. Content changes affect only the instrument (could be both the BDU and 1553B serial interface and the associated TMON procedures.

The possible changes for an instrument are:

a. which minor cycle the instrument telemetry is gathered.

b. the frequency a telemetry point is sampled.

c. the number of bits in the telemetry point.

Depending on the type of change, the following may be impacted:

a. TMONs.

b. Ground software such as decomposition of the telemetry stream and the Ground Workstation (displays).

c. CTIU such as the Gathering Schedule Table.

d. other instruments and Spacecraft Bus subsystems.

The design goals for a telemetry change are:

a. minimize disruption of telemetry flow and maintain the flow of telemetry for all but the instrument being impacted during the change–over.

b. initiate the change successfully in one ground contact period with the Spacecraft.

   The upload of the new telemetry table will not overwrite the current tables. This will permit the new tables to be loaded in some prior ground contact with the satellite if desired.

c. be able to return to the prior version quickly and easily.

   The preceding version of the tables will remain in place until a later time **(TBD)** so the ground may go back one version.

d. This will only be permitted during a TDRSS contact **(TBR)** when the up link and down link are properly configured for **(TBD)**.

The command which causes an instrument telemetry gathering schedule change is listed in Table 7–4. There will be an equivalent command for each of the non–instrument entities impacted by the change.

TABLE 7–4. Telemetry Gathering Schedule Selection

Command	Definition
TELEMETRY GATHERING SCHEDULE SELECTION	Selects which instrument telemetry gathering schedule is to be used. This command is only needed if the instrument has reprogrammable or selectable schedules. Serves as the control signal to begin using the schedule. An argument within the command refers to a telemetry table or special purpose logic to perform telemetry gathering. Due to the complexity of implementing a telemetry change, it is recommended that this only be used for on–orbit error correction and problem diagnosis.

7.3.4 Telemetry Requirements

7.3.4.1 Telemetry Sampling Rates

Every instrument telemetry point should be sampled at least once during a master cycle.

Two criteria should be considered when determining sampling rates for telemetry:

a. There should be adequate time for intervention if the associated telemetry indicates a pending failure (i.e., voltages and currents should be sampled more frequently than temperatures).

b. Telemetry used to verify proper response to a command must be sampled at least once every 8.192 seconds. This does not mean that command execution has to be complete in 8.192 seconds.

Telemetry sampling will be according to a strict set of criteria. Subcommutation is at the instrument's discretion; however, the instrument's subcommutation must be synchronized to the Spacecraft major and minor cycle counts. It must be possible for the SCC software to identify data uniquely, based on the values of the major and minor cycle counters and the position of the data within the 1553B message.

The instrument telemetry gathering must be completed no later than the beginning of minor cycle in which the CTIU's gathering message is expected. The telemetry storage area must not be written over during the gathering minor cycle either because of retry or normal variances in synchronization. It is recommended there be a gathering window of 24 milliseconds starting in minor cycle N–1 when gathering would occur in minor cycle N. The data remains undisturbed during this time.

7.3.4.2 Command Verification

7.3.4.2.1 Command Receipt Verification

All links of a communication path from a source to a destination have data transfer validation performed. A data transfer validation failure is reported in telemetry. The specific contents of the what the failed message contained is not identified.

Command Receipt Verification (CRV) verifies complete, correct, and proper order delivery of commands via a link in the communication path. CRV is the first level of verification and must be completed before any commands are processed further.

TABLE 7–5. Command Receipt Verification

Command Source and Destination	Link	Reported in
Ground to Instrument or Instrument BDU	Forward link service utilizing CCSDS protocol. See Section 7.2	CLCW and CTIU telemetry
	Distribution by CTIU	CTIU Telemetry
	1553B C&T Bus	CTIU Telemetry
SCC to Instrument or Instrument BDU	SCC–to–CTIU High Speed serial I/O	SCC Telemetry CTIU Telemetry
	Distribution by CTIU	CTIU Telemetry
	1553B C&T Bus	CTIU Telemetry

Command dispatching is the delivery of the command to the unit responsible for execution. Depending upon the command type, delivery may entail routing, storage, timely selection and transport. The following discusses each portion of the dispatching process list.

a. Routing is not explicitly verified. For stored commands, this would be proper intermediate storage.

b. Storage is involved in the processing of absolute time stored commands, RTCS, and table or software revisions. In all cases, proper storage is verified on board by computing a CRC and comparing it to the CRC associated and forwarded with the data. Comparison failures will be reported in telemetry.

c. Timely selection of absolute time stored commands or RTCS for execution is verified on board as an integral part of the command dispatching process. Associated with each command is an execution time. If the command is not dispatched within a pre–defined tolerance, an indication of the occurrence will be reflected in telemetry.

d. Transport is the 1553B bussing of commands from the CTIU BC to the destination RT. Bus protocol includes the RT status reporting which verifies proper transfer and receipt of the data. Unsuccessful transport will be reported in the telemetry as part of the onboard failure detection function. Instruments, at their option, may choose to telemeter the command as received from the RT, to allow the ground to verify receipt at the instrument side of the interface.

Command Dispatch Verification (CDV) verifies that commands have been delivered to their destination for execution. This insures that routing functions internal to the Spacecraft are operating correctly and allows ground operations insight into system activities. The method

of Command Dispatch Verification is dependent on the type of command and is used to verify that the command has been dispatched to the proper Spacecraft element for execution.

Real–time Commands:
These types of commands will be dispatched by the CTIU immediately upon reception by the Spacecraft. No further verification will be necessary as CDV has already guaranteed commands were received in the proper order without error.

Absolute Time Stored Commands:
ATCs will initially be routed to the stored command table (SCT) in the SCC. Ground operations will maintain an identical copy of the stored command table for verification. Stored commands will be dispatched according to the time tag argument word transmitted with the command. Command dispatch will cause the stored command table pointer to increment. The value of the stored command table pointer will be transmitted to the ground as part of the housekeeping telemetry data, thereby providing verification that the stored command was dispatched.

Relative Time Sequence Commands:
RTSCs will be dispatched at fixed times relative to the triggering of the sequence. These commands will be stored in a separate process table. Downlinked telemetry will indicate if a particular command sequence is active and allow determination of the time at which it was activated. From this data, ground analysts can project when each command in the sequence will be dispatched for execution.

FDIR Commands:
FDIR commands will be dispatched by internal processes in the flight software. The flight software telemetry will indicate the status of all monitor processes and indicate the condition which caused an FDIR command to be executed.

7.3.4.2.2 Command Execution Verification

Command Execution Verification (CEV) verifies that a command has been executed by the destination entity and that it has had the desired effect on the system. This will provide ground operations additional insight into the operating condition of the Spacecraft. All command execution must be verifiable in telemetry. All data needed to verify command execution must appear in the critical health and safety telemetry stream at least once per major frame in order to support contingency operations. The method of CEV will depend upon the command type.

Relay Drive Commands:
This type of command will generally be used to change the state of a relay and will be verified by a status change in the affected element's telemetry data.

C&T RT Commands:
Verification of execution may be either by echoing the loaded register or memory

value back in telemetry or by watching for status changes in the affected component's telemetry data.

7.3.4.2.3 Command Verification Sampling Rate

It is recommended that the instrument select either 1.024 seconds or 8.192 seconds as the sampling rate for telemetry which is to be used for command verification. Slower sampling rates would adversely affect I&T time and the time required for realtime command verification. Slower sampling adversely affects I&T time and real-time operations on orbit when command execution verification is performed before sending further commands.

7.3.4.2.4 Command Execution Verification Telemetry

Telemetry used to directly verify command execution must only change value for those commands being verified. If this is not the case, there could be many different values that are considered acceptable in verifying the proper response to a command. In addition, it would make it difficult to determine if the telemetry had changed in response to a command or changed unexpectedly.

7.3.4.3 Instrument Mode Dependency

The telemetry format will remain unchanged through the various instrument operational modes.

7.3.4.4 Instrument Activity Dependency

It is important from an I&T and operations perspective that the format of the telemetry stream from each housekeeping module and instrument be fixed.

7.3.4.5 Configuration Dependant Telemetry

The telemetry used for configuration must be unique for each configuration of the instrument. All indeterminate values must be identified.

7.3.4.6 Synchronization Restrictions

The 1553B synchronize–with–data–word will be used to synchronize the schedule telemetry transfer by the instrument. Periodically, a synchronize–with–data–word 1553B message is transmitted by the BC to the instrument to assure synchronization of minor cycles between the instrument and the CTIU. If there is a difference between the two, then the instrument minor cycle counter is changed to reflect the CTIU. The instrument telemetry should contain information indicating this problem occurred. Use of the synchronize–with–data–word permits command and telemetry operations even if the TM&F bus should fail.

7.3.4.7 Instrument Telemetry Mnemonic Format

The telemetry mnemonic format will be used by all Spacecraft subsystem and instrument personnel and will appear in the ground databases. Human factors should be taken into consideration when selecting the name. For instance, the use of I, L, and 1 are easily confused with each other, and care should be taken in their use.

7.3.4.8 Telemetry Name

Similarity in telemetry naming simplifies the Spacecraft Command and Telemetry database and should be coordinated closely with the Spacecraft Provider.

7.4 Command and Telemetry Bus Data

It is recommended that commands common to all instruments be defined by the Spacecraft Bus to have the same content for all instruments. The content of those commands unique to each instrument will be defined by the Instrument Provider. Final content is to be defined in the instrument C&T ICD. A brief description of each command is contained in Table 7–6 for mandatory commands and Table 7–7 for optional commands along with references to the appropriate GIIS section.

7.4.1 Memory Loads

The C&DHS will provide the support for instrument memory loading, based on the process described in previous sections. The instrument may choose not to implement this process and command set.

7.4.2 Memory Dumps

The C&DHS will provide the support for instrument memory dumping, based on the process described in previous sections. The instrument may choose not to implement this process and command set.

TABLE 7–6. Mandatory Instrument Commands

Command	Definition	GIIS Reference
SAFE–MODE	Indicates Spacecraft entry into safe–mode	6.1.3.1.3
SCC OK	This is the "IMOK" signal from the SCC.	6.1.3.1.4
ENABLE/DISABLE SAFEMODE TIMEOUT ENTRY	Allows disabling of the autonomous entry into Safe–Mode due to the lack of an SCC OK signal. Deemed useful during integration and test, and can play a role in on–orbit diagnosis.	7.5.2.1.1
ENABLE/DISABLE Instrument FDIR	Allows disabling of autonomous activities associated with equipment failures. Deemed useful during integration and test as well as on–orbit contingency situations. If individual functions within FDIR are to be enabled/disabled, then an argument which selects these functions must be embedded within the command.	7.2.1.2.1.1
TIME/FREQUENCY BUS SELECT (A or B)	Defines which bus to use. The argument contains a bus ID. Selection of one must inhibit use of the other.	7.2.2.4.1
ANCILLARY DATA	Provides the Ancillary data block (32 words) to a dedicated subaddress.	6.1.3.5
TIME CODE	Data words contain the 64 bit Day Segmented CCSDS Time Code.	6.1.3.6
HIGH–RATE SCIENCE LINK SELECT (A or B)	Defines which bus to use. The argument contains a bus ID. Selection of one must inhibit use of the other.	6.4.1.1
LOW–RATE SCIENCE LINK SELECT (A or B)	Defines which bus to use. The argument contains a bus ID. Selection of one must inhibit use of the other.	6.3.1
TELEMETRY GATHERING	Selects which telemetry gathering schedule is to be used by the instrument. This command is only needed if the instrument has reprogrammable or selectable schedules. Serves as the control signal to begin using the schedule. An argument within the command refers to a telemetry table or special purpose logic to perform telemetry gathering. Due to the complexity of implementing a telemetry change, it is recommended that this only be used for on–orbit error correction and problem diagnosis.	N/A

TABLE 7–7. Optional Instrument Commands

Command	Definition	GIIS Reference
MEMORY DUMP INITIATE	Provides the parameters necessary to perform a memory dump	6.1.3.2.2
RESET MEMORY DUMP STATE	Places dump logic into an inactive state. Provides a reset capability should problems prevent proper termination of a previously initiated dump.	N/A
MEMORY LOAD INITIATE	Provides the parameter necessary to perform a memory load.	6.1.3.2.1
MEMORY LOAD DATA	Supplies a segment (maximum of 32 words) of data.	6.1.3.3
RESET MEMORY LOAD STATE	Places memory load logic into an inactive state. Provides a reset capability should problems prevent proper termination of a previously initiated load.	N/A

7.4.3 Ancillary Data

The C&DH subsystem will accept and replicate ancillary data from the active SCC in which standard format data is distributed to instruments over fixed–time intervals. The purpose of ancillary data is to provide the instrument with routinely updated Spacecraft data consisting of time tag, guidance, navigation and control parameters (i.e., state vectors, Spacecraft attitude, and celestial body position), bus status, and other appropriate data. The time tag provides the instrument with an indication of the time the ancillary data is valid. The C&DH subsystem will also send the same ancillary data to the ground via the Ku–band return link. Instruments not requiring ancillary data for onboard processing are not required to use this service.

7.4.4 Time Code Data

The Time Code Message is issued every 1.024 seconds by the active CTIU. The Spacecraft time is reported in CCSDS standard day segmented time code format as defined in CCSDS 201.0–B02, Section 2.3 and shown in Figure 7–10.

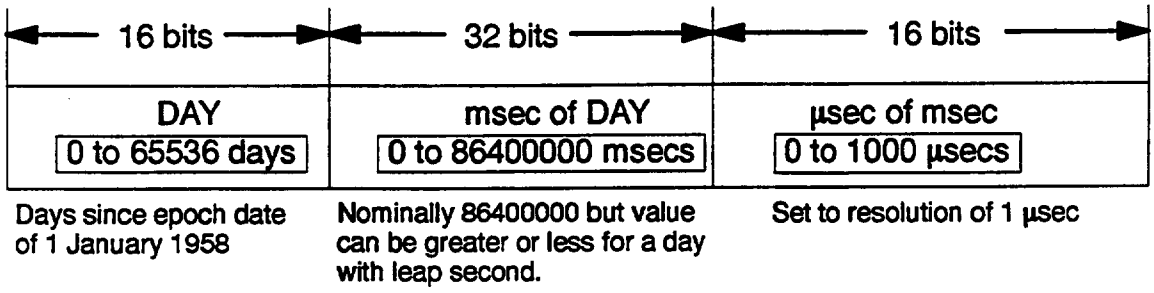

Figure 7–10. Time Code Data Words

The Spacecraft Clock is monotonically increasing after power–up and reset are complete. Only the active CTIU's Spacecraft clock is propagated to other Spacecraft equipment. The master Spacecraft clock data is sent to designated recipients on the C&T bus per the bus utilization table. The recipients must receive their message in sufficient time (i.e., no later than 900 milliseconds) to use the data.

Upon power–up, the master Spacecraft clock is set to a pre–defined epoch date. Later, the ground controller issues clock commands to set and adjust the time. Absolute–time set commands are capable of being set to an accuracy of 1 msec and to a resolution of 1 msec. The execution of all absolute time set commands are coincident with the start of a major cycle. The commanded clock adjustments have a resolution of 1 millisecond or finer, a range of ±4 seconds or wider, and be executed with a precision of 1 microsecond or finer.

The execution of all delta time set commands will be coincident with the start of a major cycle. Once the system is running nominally, the drift is adjusted by sending commands to the MO to adjust its frequency.

Time adjustments due to leap seconds is per CCSDS and is handled as a ground controller command procedure. The leap second commands shall permit the Spacecraft clock to add or delete one second at the end of the day when it rolls over to the next day. This command can be sent anytime that day and before the rollover to the next day occurs, since the command only alters the rollover value. When the next day occurs, the CTIU will return to its default rollover value. The ground controller will send the leap second command to a CTIU indicating whether to add or subtract one second at the end of the day. The ground controller will also send a leap second command to all other users utilizing Spacecraft clock time. The leap second commands will only be permitted to be issued once or twice a year by ground operations. The only dates allowed by the ground controller to send the leap second commands will be the last day of June and the last day of December.

The C&DHS supports the precise, accurate measurement by the ground of the Spacecraft clock error via the NASA User Spacecraft Clock Calibration System (USCCCS) by synchronizing the transmission of S–band telemetry CADUs with the Spacecraft clock. Also, the ground system supplies a pseudo–noise (PN) signal with a periodicity of 85 msec in the Forward Link Service. The CTIU measures and reports in telemetry the elapsed time from the time mark instant (1.024 seconds) and the next occurrence of the PN epoch. This provides for a more precise measurement for the ground to determine the Spacecraft clock value at the receipt time of the PN–code.

Information allowing for the conversion from Spacecraft clock time to UTC by instruments and ground users is provided by the SCC–based FSWS in the ancillary data message. The GN&CS-generated estimates of the error in the Spacecraft clock is part of the ancillary data service. These estimates are used as needed by instruments and in ground data processing to derive UTC time from Spacecraft clock time samples

7.5 Autonomy

The Spacecraft FDIR concept requires the Spacecraft to autonomously survive any anomaly which requires reconfiguration to occur within six hours of the anomaly. Less time-critical anomalies are allocated to ground controllers for response. Responses to anomalies for which a response latency of more than a few seconds is acceptable are generally allocated where appropriate to flight software (i.e., TMON, or FDIR logic) for execution, while anomalies requiring faster response are responded to in hardware.

The C&T Bus provides instruments with a service wherein specified telemetry may be activated via a TMON for specified conditions and RTCSs triggered. This service is intended to provide the software anomaly response function for instruments as described above. No hardware anomaly response beyond an indication of safe–mode entry is required.

Instruments, therefore, must autonomously survive any single fault requiring action in less than a few seconds. For TMON and RTCS anomaly responses which are required sooner than 10 seconds after the anomaly, the instrument must make the telemetry value to be monitored available to the C&T Bus at least once per second so that timely action can be initiated. Instrument Providers are encouraged to design such that a minimum of TMON and RTCS responses are needed from the C&T Bus in order to minimize the complexity of the instrument-to-C&T Bus interface and the verification thereof, and minimize the total capacity required of the TMON and RTCS services.

There are no restrictions on the maximum autonomy which instruments may implement internally, other than the constraints due to the instrument and C&T Bus coordination requirements for Spacecraft resources. FDIR support from TMON is a limited, allocated resource. It is always acceptable for an instrument to transition to a reduced resource state autonomously for internal FDIR. This action must place the instrument in a state where receipt of previously scheduled stored commands and an RTCS will not jeopardize instrument or Spacecraft health and safety. It must also be possible to disable this action by command. The general philosophy on autonomy should be to keep it simple—each autonomous function beyond the minimum required must be justifiable on its own merits.

For instrument failures which do not affect communications over the C&T bus, both ground control and the TMON onboard monitoring function may monitor instrument telemetry to determine whether action is required. In either case, contingency procedures will have been defined in advance to react to a given situation. These procedures involve commanding (perhaps both discrete and serial) which must be mutually agreed upon by both the instrument and Spacecraft Bus.

From the instrument perspective, bus or RT failure results in loss of the synchronization and "SCC OK" commands. Under current guidelines, the instrument should react autonomously and enter it's safe–mode state.

7.5.1 Instrument Mode and State Changes

7.5.1.1 Infrequently Changed Parameters

A large class of instrument commands is used for the setting of operational parameters whose values are changed rarely or which usually take on the same value every time a certain instrument mode is entered. It is recommended that the instrument be designed, where practical, such that these commands may be executed via real-time commanding, only when a modification to the parameter is required. A memory of mode-dependent parameters within the instrument would avoid the need to command these parameters each time a mode is entered. This would minimize the need for stored commands or RTCSs to dispatch multiple commands for each planned mode change.

7.5.1.2 Normal Instrument State Changes

Another class of instrument commands are used for setting internal instrument states which will normally be executed as a group when the instrument is switched to a given mode. Performing these events via relative-time sequencing or macro–expansion internal to the instrument would minimize the need for stored commands or RTCSs to dispatch multiple commands for each normal mode change.

7.5.1.3 Mode Changes

The operations profiles for the C&DHS SSRs must be carefully planned by the Flight Operations Team (FOT). Goals include conservation of recorder life, minimization of recorded fill data, accommodation of the planned TDRSS contact times, and accommodation of the aggregate data rate profile of the instrument set, all without any loss of science data.

7.5.2 Safe and Survival Modes

The following sections highlight the pertinent features of instrument entry and exit from safe and survival modes. Appendix D of this document defines all Spacecraft modes, and specifically addresses instrument accommodation. Included in the appendix are details of the mode transition method, resulting Spacecraft state conditions and services available to the instrument within each mode.

7.5.2.1 Instrument Safe–Mode

7.5.2.1.1 Instrument Safe–Mode Entry

There are two ways the instrument can be notified of a safe–mode. One way is that an instrument will stop getting the SCC message "IM OK" over the C&T bus. The second way is to receive one or more commands from the SCC which directs the instrument into a level

within safe–mode. Included in the command sequence is the "go to Safe–Mode" command. It should be noted that a power failure will cause entry into survival mode, not safe mode.

The Spacecraft will continue to furnish resources and services to the instrument, but they are dependent on Spacecraft Bus capability, which is reflected by the safe–mode level in effect. An instrument safe–mode configuration is optional. Minimally, the instrument should reflect the safe–mode command receipt, if commanded. The instrument's housekeeping telemetry should reflect any other key information such as configuration changes.

7.5.2.1.2 Instrument Safe–Mode Configuration

Upon receipt of the signal, the instrument will have 30 seconds to change its configuration to a pre–defined safe–mode configuration in accordance with safe–mode level.

7.5.2.1.3 Safe–Mode Entry Override

Upon receipt of the signal, the instrument will have the capability to prevent entry into safe–mode. The currently defined safe–mode commands are listed in Table 7–8. Other commands may be necessary to define a particular level within safe–mode **(TBD)**.

TABLE 7–8. Safe–mode Enable/Disable Override Commands

Command	Definition
DISABLE SAFE–MODE TIMEOUT ENTRY	Allows disabling of the autonomous entry into Safe–Mode due to the lack of an SCC OK signal. Deemed useful during integration and test, and can play a role in on–orbit diagnosis.
ENABLE SAFE–MODE TIMEOUT ENTRY	Converse of disable safe–mode time–out entry.

7.5.2.1.4 Duration of Safe–Mode

The instrument will remain in safe–mode until it is changed by external intervention such as ground commanding.

7.5.2.2 Instrument Survival Mode

In survival mode, instruments will not take science data and will power down all equipment except for survival heaters and controllers.

7.5.2.2.1 Spacecraft Survival Mode Entry

The instrument will define the specific commands to be issued to effect the change to survival mode. Upon receipt of these commands, the instrument must reconfigure to its pre–defined survival–mode configuration. This is a minimum power state utilizing survival equipment only.

7.5.2.2.2 Instrument Survival Mode Entry

When the survival–mode commands are issued by the Spacecraft Bus, all instruments will have 30 seconds to enter their survival–mode configuration. The instrument will remain in survival mode until it is changed by external intervention. An instrument may be designed to receive serial or discrete survival–mode commands.

The Spacecraft will continue to furnish the same level of resources (e.g., power, communication, SCC TMONs) to the instrument for a limited time. Afterwards, the Spacecraft will reduce the Spacecraft–furnished resources to provide only survival power to the instrument and collect critical telemetry. An instrument survival configuration is mandatory. Sun sensitive instruments should shut covers or be capable of closing covers with only survival power because sun–pointing safe–mode could be entered after survival–mode.

The instrument's housekeeping telemetry should reflect entry into survival mode and any other key information such as configuration changes During Survival–Mode, only BDU passive telemetry is collected, and only BDU commands are issued.

7.5.2.2.3 Duration of Survival Mode

The instrument will remain in survival mode until it is changed by external intervention. The method of exiting survival mode is initiated via BDU commands. These commands will power up and configure the equipment to be used in the subsequent mode.

7.5.2.3 Instrument Safe and Survival Modes Documentation.

Instrument survival and safe–mode command requirements are documented in the instrument C&T ICD.

7.5.3 Memory Load Verification

Memory loads may be verified using onboard computation. The use of an error checking process, such as a CRC, for memory loads eliminates the need to dump the load data for an integrity check. The CRC, though optional, is highly recommended.

7.5.4 Time Mark and Frequency Bus Loss

Loss of the TM&F Bus will affect time accuracy, in the application of time tags, and clock synchronization, but should not interrupt operations. Instrument internal clocks should permit continuation of logic processes. The synchronize–with–data–word, issued via the C&T bus, allows for command receipt and telemetry reporting. The data word contains the minor and major cycle counts which are used to coordinate instrument telemetry sampling with BC collection. It is intended that the instrument internal logic will continue to use this data to either condition the logic, or confirm synchronization with the BC. If a time difference between the BC and instrument grows to the point where the minor cycle count differs from that which is expected, the instrument should automatically resynchronize and continue.

Loss of this bus should be reported in telemetry. A critical telemetry indicator should be reserved for this purpose.

8 CONTAMINATION CONTROL REQUIREMENTS

The instrument Contamination Control Plan should be developed such that all the contamination control requirements, including those pertaining to I&T of the instrument as well as those pertaining to on–orbit operations, are met. Based on instrument requirements, limitations and restrictions may be placed on materials used in the construction of the instruments and Spacecraft in order to minimize cross contamination.

8.1 Contamination Protection Design

The contamination budgets for particulates and molecular species on all sensitive surfaces should take into account contamination levels during Spacecraft I&T, including launch site activities, and all mission phases. The allowable surface cleanliness levels (molecular and particulate) should be specified in accordance with MIL–STD–1246. The instrument Provider should identify all contamination sources associated with the instrument and predicted levels of contamination.

Instrument optical surfaces are inspected during I&T using inspection methods at intervals as specified by the Instrument Provider. Cleaning of the instrument optical surfaces is the responsibility of the Instrument Provider. Prior to integration with the Spacecraft, the Instrument Provider verifies the cleanliness levels of all external surfaces. The verification methods identified by the Instrument Provider are submitted to NASA for review and approval.

The instrument design should include methods for protecting contamination sensitive surfaces, such as the use of covers and doors. It is recommended that sensitive instrument optical surfaces be covered during I&T, including launch site activities. Such surfaces should be uncovered only during performance testing.

The initial on–orbit environment is expected to cause an increased risk to optical surfaces due to the high rate of Spacecraft outgassing. This condition is expected to exist until approximately one month after orbit acquisition. Instrument design should include stowable covers or doors to protect sensitive instrument surfaces during this period and also during routine orbit adjustment maneuvers which occur throughout the mission. Also, the instrument provider should describe any on–orbit decontamination capabilities.

Outgassing requirements for materials used in instrument construction are delineated in GSFC 420–05–01, Section 6. Thermal vacuum bake–out of the instruments, MLI, wire harnesses and all other instrument components or subassemblies will be performed by the Instrument Provider. The bake–out should be performed at the maximum on–orbit

temperature predicted for parts or subassemblies. In the test data package delivered with the instrument, the Instrument Provider should include thermal quartz crystal microbalance (TQCM) data on the outgassing rate for the instrument and necessary subassemblies during thermal vacuum bake–out. This data is used by the Spacecraft Provider to ensure that the external contamination control requirements of each instrument are satisfied.

8.2 Contamination Protection Measures Documentation

The I&T ICD references all pertinent documents containing procedures for contamination protection of the instrument during I&T. It also lists any instrument Government Supplied Equipment (IGSE) pertaining to contamination protection of the instruments.

8.3 Instrument Purge Implementation Documentation

The Spacecraft Provider will supply facility gas for instrument purge during Spacecraft I&T at Martin Marietta Astro Space, and will arrange for purge gas during transportation to the launch site and during launch site activities. The Instrument Provider will supply the flow meter and filter. The procedures and constraints associated with instrument purge will be referenced in the I&T ICD including purge gas type, flow rate, purity, and duration.

8.4 Instrument Venting Documentation

The locations and dimensions of all instrument vents will be included on the MICD drawing. Notes to the drawing will indicate vent path, operation time, chemical identity, and quantity of species that will be vented.

8.5 Surface Avoidance

It is important that instrument vent locations and contamination–sensitive surfaces be identified by the Instrument Provider as early as possible, in order that the Spacecraft layout of the instruments be developed with instrument contamination control requirements accommodated.

9 VERIFICATION AND REQUIREMENTS RESPONSIBILITY

Verification is the process of analyses, inspections, demonstrations, and tests that collectively establish that performance requirements levied on a product have been met. The end results of the verification process demonstrate that an item meets applicable functional and performance requirements, and therefore is flight–worthy. The verification process is performed during the development, qualification, and acceptance phases of the program. In the process, as illustrated in Figure 9–1, the performance and design requirements of an item are used to establish and allocate the verification requirements. This allocation of verification methods is presented in the Verification Matrix. The designated verification activities are then conducted and the results are compared against requirements. After this comparison, verification is either confirmed, or the design or manufacturing process is altered to achieve compliance with the requirements. If such a redesign or change in manufacturing is made, the item undergoes complete or partial re–verification, depending on where in the cycle the noncompliance occurred.

The Instrument Provider must demonstrate compliance with the interface design requirements specified in the GIIS by a series of independent verification activities. These activities will utilize the verification methods described below to demonstrate this compliance. These activities must verify interface design and acceptable workmanship. They must also ensure interface compatibility with the Spacecraft and compliance with associated systems safety requirements.

9.1 Requirements Responsibility Matrix

The Requirements Responsibility Matrix lists each GIIS requirement by paragraph number and identifies the organization responsible for implementing each requirement. Since there are several organizations involved in verification, the verification responsibility may not reside with the implementing organization.

9.2 Verification Responsibility and Methods Matrix

The Verification Responsibility and Methods Matrix lists each GIIS requirement by paragraph number and identifies the organization responsible for demonstrating compliance with each requirement, as well as defining the method for demonstrating this compliance. The Spacecraft Provider and Instrument Provider must demonstrate interface compliance by a series of independent test and analysis activities using one or more of the following methods: analysis, inspection, demonstration, and test. The methods of verification are described below.

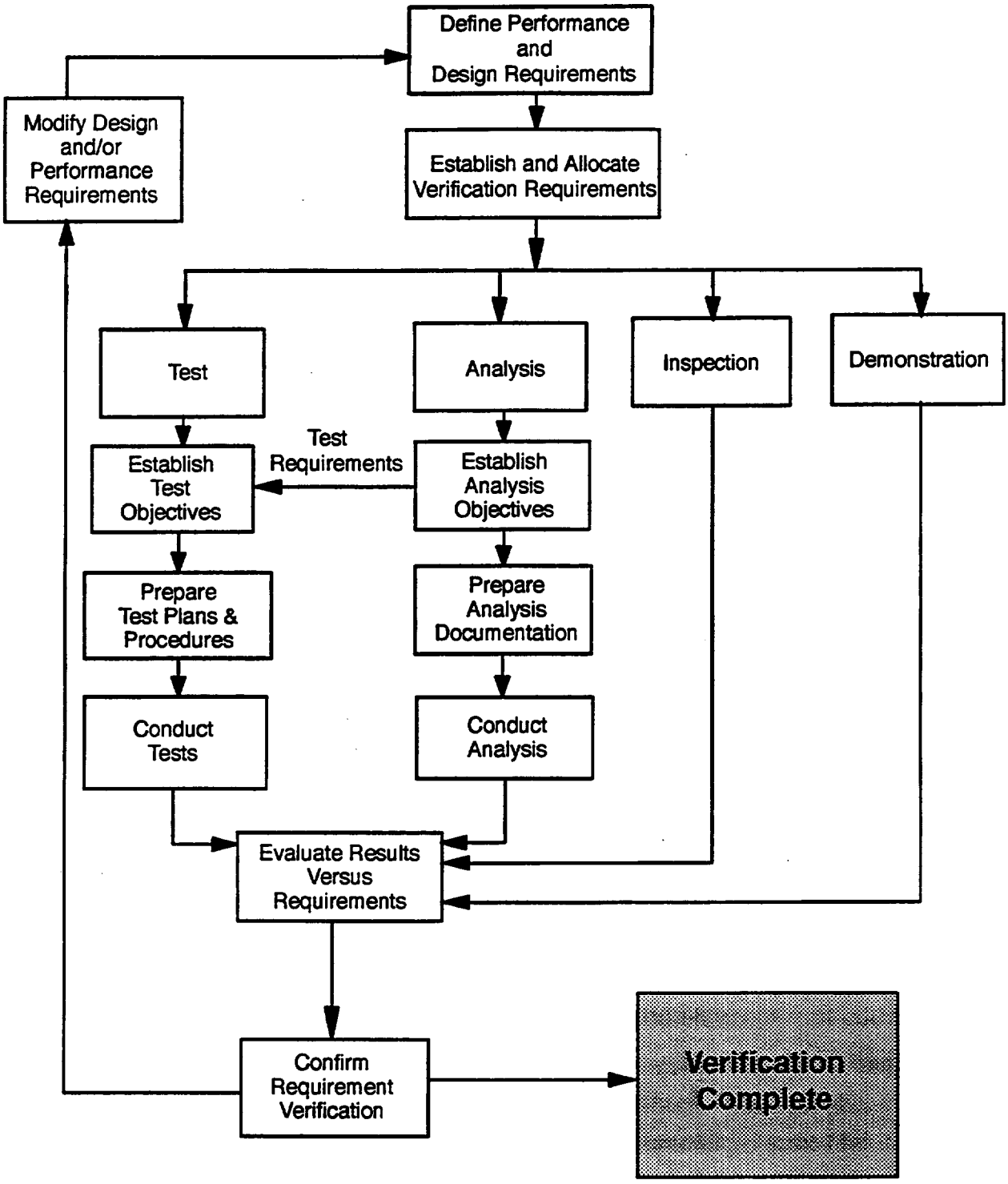

Figure 9–1. Summary of the Verification Process

Analysis – Analysis is a quantitative method of verification utilizing techniques and tools, such as math models, compilation of prior test data, simulations, analytic assessments, and validation of records, to confirm that the hardware will perform its intended function with margin. The results are reported in a fashion that relates the findings of the analysis to the requirement(s) being verified, including assumptions and constraints imposed. Whenever possible, test data shall be used to validate the analytical techniques used for verification.

Inspection – Inspection is a verification method used to determine compliance of the physical characteristics without the use of special laboratory equipment, procedures, test support items, or services. Standard methods, such as visual inspection and the use of gauges, are often used to verify compliance with the requirements levied on construction features, workmanship, and physical condition. Inspection also includes examination of documentation, drawings, and/or software.

Demonstration – Demonstration is a qualitative method of verification that evaluates the functional properties of an end item or component through observation. Demonstrations may be performed with or without special test equipment or instrumentation in order to verify required characteristics, such as operational performance, human engineering features, service and access features, transportability, and displayed data.

Test – Test is a quantitative method of verification in which performance requirements are verified by measurement before, during, or after the controlled application of functional and/or environmental stimuli. These measurements may require the use of laboratory equipment, recorded data, procedures, test support items, or services.

(This page intentionally left blank.)

10 ENVIRONMENTS

This section further expands on the environments unique to the EOS–AM mission, and makes some recommendations on design methods to protect the instrument from these conditions.

10.1 Ephemerides

10.1.1 Orbital Characteristics

The Spacecraft is in Sun–synchronous frozen orbit with a 98.2 degree inclination angle at an equatorial altitude of 705 km. The South–bound equator crossing or descending node is at 1030 hours local mean solar time with a window of ±15 minutes.

The orbital parameters specified in the GIIS with additional parameters are listed in Table 10–1.

TABLE 10–1. EOS ORBITAL PARAMETERS

Parameter	Numerical Value
Semi–Major Axis (Brouwer Mean)	7078 km
Altitude at the Equator	705 km
Altitude Range (Elliptical Earth Model)	700 to 737 km
Inclination Angle	98.2 degrees
Descending Node (Local Mean Solar Time)	1030 ± 0.25 hours
Solar Beta Angle	13 to 31 degrees
Geographic Repetition Cycle	233 orbits
Geographic Repetition Accuracy (Cross–track)	±20 km (3σ)
Time Repetition Cycle	16 days
Mean Nodal Period	98.9 minutes

Figure 10–1 is a plot of the beta angle versus time of year. The beta angle is defined as the angle between the orbit plane and the Earth–to–Sun vector. The beta angle varies with descending node, and varies with day of the year for any given descending node. A degree of margin is added to the beta angles shown on the curve for nodal and attitudinal variations. Figure 10–2 is a plot of the eclipse duration versus time of year. The eclipse

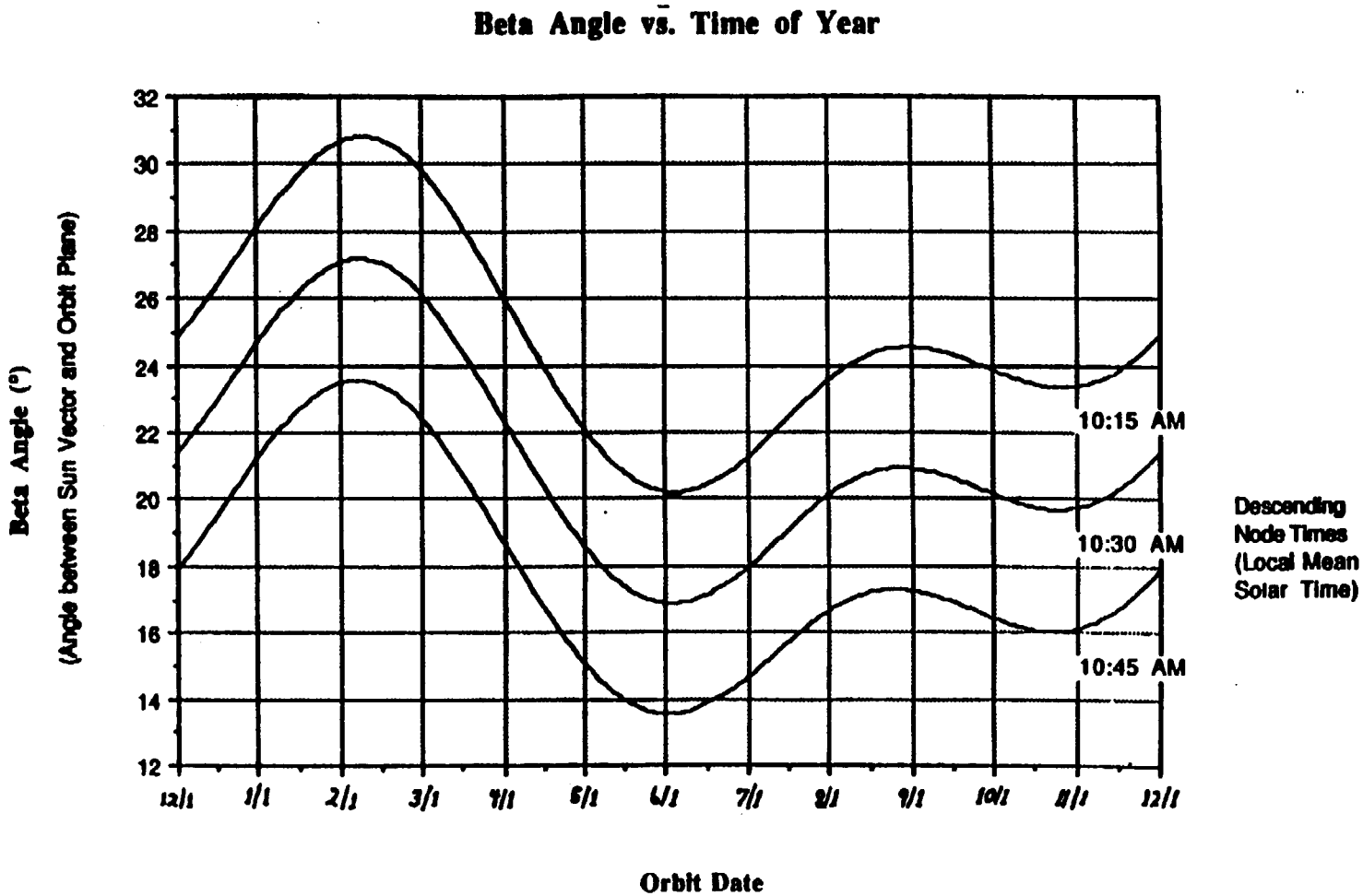

Figure 10–1. Beta Angle versus Time of Year for 1030 hr Descending Node 705 km Orbit

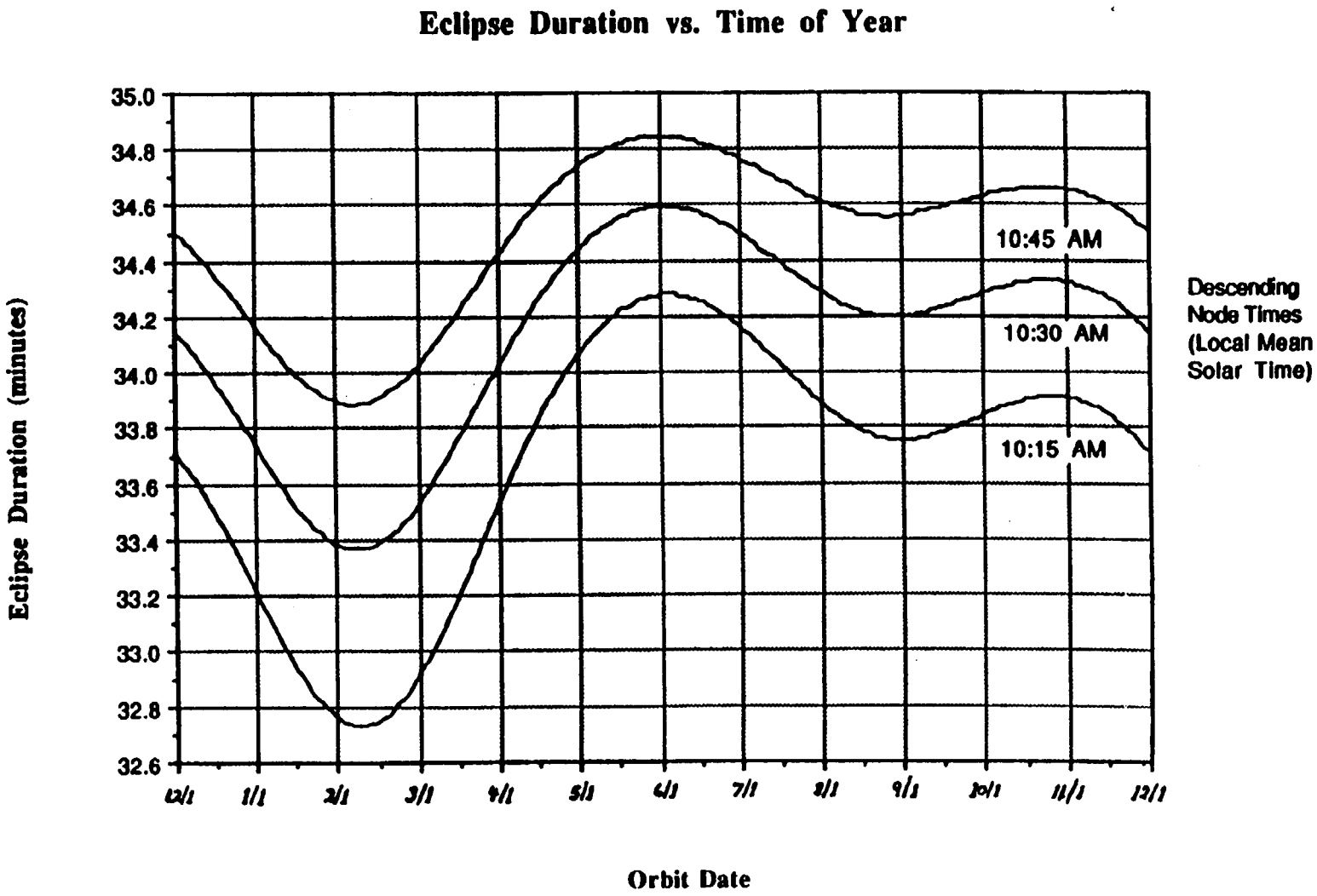

Figure 10–2. Eclipse Duration verses Time of Year for 1030 hr Descending Node 705 km Orbit

duration is the length of time the Spacecraft spends in eclipse for a single orbit. This is based upon the relative geometric relationship the orbit has to the Sun, which is a function of the time of year.

10.1.2 Transfer Orbit Characteristics

The EOS–AM Spacecraft will be separated from the launch vehicle into an elliptical orbit with the same nominal orbit inclination (98.2 degrees) and descending node (10:30 Local Mean Solar Time) as the nominal mission orbit. The transfer orbit will have nominal apogee and perigee altitudes of 686 and 550 km respectively. The transfer orbit was selected to optimize the relationship between the candidate launch vehicle lift capabilities, the propellant load required to satisfy the mission requirements, and the design complexity of the on–board propulsion subsystem.

While in this orbit, the Spacecraft beta angle will vary within the same 13 to 31 degree range as in the nominal orbit depending on the time of year of the launch (see Figure 10–1). Only a slight variation (on the order of minutes) will occur in the eclipse durations shown in Figure 10–2.

10.1.3 Sun–Pointing Safe Mode Orbital Characteristics

The Spacecraft may enter sun–pointing safe mode either automatically, via the Failure Detection, Isolation, and Recovery System, or via ground command. Automatic entry into this mode will occur when Earth presence has been lost on either of the two Earth Sensors; when the difference in readings between the two Earth Sensors has exceeded a threshold value; or when the reaction wheels are determined to be saturated while the Spacecraft is in the Earth–pointing safe mode. In this final case, the Spacecraft will operate in the sun–pointing safe mode under thruster control.

10.2 Spacecraft Reference Coordinate Frame

The Spacecraft coordinate system has been fixed so that the Z axis is through the center of the Earth, with +Z being nadir, and normal to the instrument mounting surface. The Y axis is along the orbit normal with +Y towards the cold side of the Spacecraft. The X axis is normal to the Spacecraft separation plane, and is nominally oriented along the orbital velocity vector, with +X being in the velocity direction. However, due to the slight eccentricity of the orbit, the X axis is not always coincident with the velocity vector. The Spacecraft origin (X=0) is located at the geometric center of the propulsion module base panel, 4 inches (**TBR**) above the Spacecraft separation plane.

10.3 Pointing

The Spacecraft's pointing requirements are divided into three distinct categories: pointing accuracy, pointing knowledge, and pointing stability/jitter. Figure 10–3 illustrates graphically the definitions for each aforementioned category, and they are defined as follows:

a. **Pointing Accuracy** – the angle between the actual pointing direction and the desired pointing direction of a selected reference frame about a given axis.

b. **Pointing Knowledge** – the accuracy of the determination of the actual pointing direction of a given axis of a selected reference frame. Pointing knowledge can refer to a real–time (on–board) determination or a post–processed (i.e., after–the–fact) determination.

c. **Pointing Stability** – the peak–to–peak variation of the actual pointing direction over relatively long time intervals. Usually derived from long duration instrument concerns such as pixel or image registration, and involves durations on the order of hundreds of seconds per axis.

d. **Pointing Jitter** – the peak–to–peak variation of the actual pointing direction over relatively short time intervals. Usually derived from short duration instrument concerns such as pixel integration and is usually applied for durations on the order of seconds per axis.

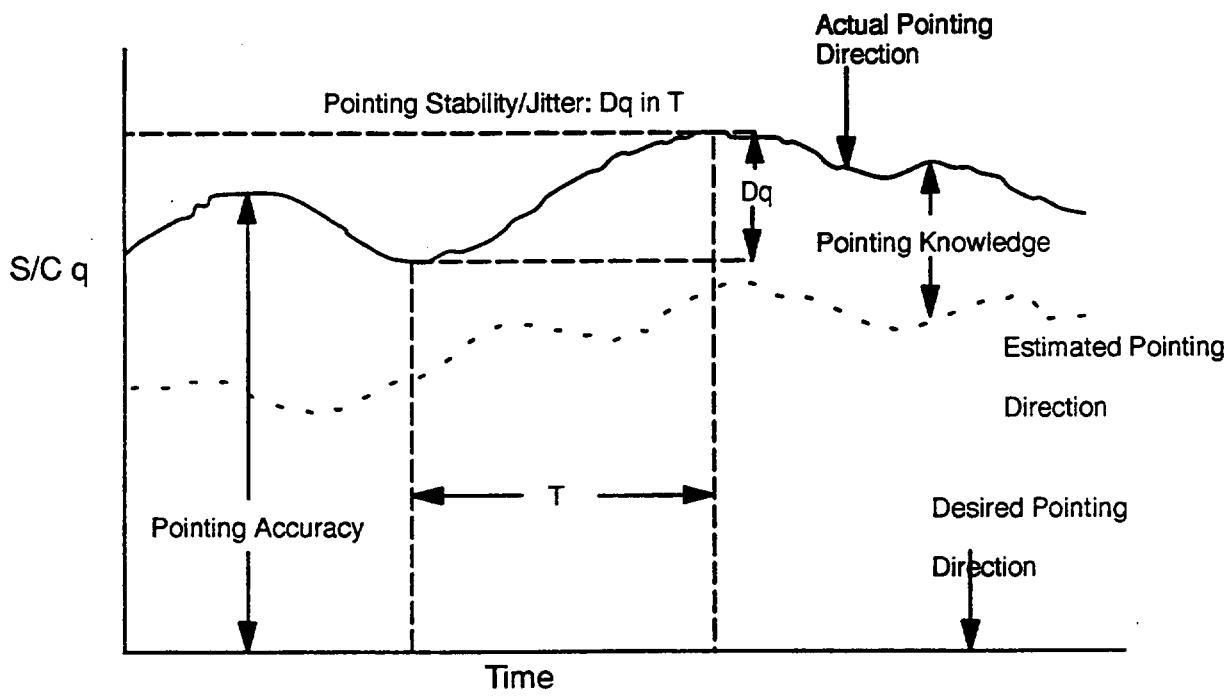

Figure 10–3. Pointing Requirement Definition

An important component of each of the above is orbit position knowledge, which is the distance between the actual location of a selected reference and the reported location, measured in kilometers about a given axis.

10.4 Thermal Environments

Prelaunch environment includes the environments for integration and test, transportation, launch processing, storage, and handling activities. Launch and ascent environment includes the environment for liftoff through delivery to a 300 km by 700 km transfer orbit. Transfer orbit environment includes that encountered in a 300 km by 700 km orbit (nominally 3 orbits) through insertion to a 700 km circular orbit. Orbit environment is that present at a 700 km circular orbit.

10.4.1 Prelaunch, Launch, Ascent Thermal Environment

The instrument will be exposed to the thermal environments in Table 10–2 during the prelaunch period.

TABLE 10–2. PRELAUNCH ENVIRONMENT

Parameter	Numerical Value
Temperature Range (Off–pad)	55 – 75°F (13 – 24°C)
Temperature Transients (Off–pad)	±5°F (±15°C)
Relative Humidity (Off–pad)	30 to 50%
Temperature Range (On–pad)	40 – 85° F (4 – 29°C)
Relative Humidity (On–pad)	30 – 50%

The thermal environment to which the instrument will be exposed during launch and ascent is dependant on the launch vehicle used for the EOS–AM mission, which has not yet been selected. Upon launch vehicle selection, the environment information will be documented in the EOS Spacecraft/ Launch Vehicle ICD.

10.4.2 Deleted

10.4.3 Thermal Environment

The assumed key orbital environmental parameters and the available material properties are contained in Table 10–3. Specifics of the on–orbit thermal environment flux levels from all sources based on an integrated Spacecraft thermal model will be documented in the TICD.

TABLE 10–3. THERMAL CONTROL SUBSYSTEM: ASSUMED PARAMETERS

Operating Mode	Orbit Altitude	Beta Angle (degrees)	Solar Flux (w/sq in)	Albedo	Earth IR(w/sq in)
Science	705 km	13.5	0.911	0.329	0.157
(EOL)		18	0.910	0.336	0.155
		30.8	0.860	0.336	0.155
Science	705 km	15	0.871	0.315	0.148
(BOL)		24.5	0.869	0.311	0.150
		30	0.901	0.315	0.148
Survival	705 km	15	0.871	0.315	0.148
(BOL)		24.5	0.869	0.311	0.150
		30	0.901	0.315	0.148
Orb Acq.	550x700 km	15	0.871	0.315	0.148
(BOL)		24.5	0.869	0.311	0.150
		30	0.901	0.315	0.148
Science	705 km	30.8	0.860	0.336	0.155
(EOL, SPSM, two S/C orientations)		30.8	0.860	0.336	0.155
Safe	705 km	15	0.871	0.315	0.148
(BOL, SPSM, two S/C orientations)		15	0.871	0.315	0.148
Orb Acq.	550x700 km	15	0.871	0.315	0.148
(BOL, SPSM)		24.5	0.869	0.311	0.150

Key Material Properties:

Radiators (Silver Teflon) α 0.10 (Cold), 0.25 (Hot)
Radiator (Silver Teflon) ε 0.79
MLI Effective Emissivity ε 0.025

Note: EOL = End–of–Life; BOL = Beginning–of–Life; SPSM = Sun–Pointing Safe Mode

10.5 Total Ionizing Dose Environment

The EOS space radiation environment is defined by the naturally trapped electron and proton environment and the solar flare proton environment. Base assumptions for this natural environment include:

- Orbit Ephemeris: 705 km circular, 98.2 degree inclination orbit
- Mission Duration: 5 years
- Geomagnetic Constant: 0.28
  (Reference: An Empirical Model of Energetic Solar Proton Fluxes with Applications to Earth Orbiting Spacecraft; E.G. Stassinopolous and J.H. King; GSFC; December 1972)
- Trapped Electron Model (see Table 10–4): NASA AE8 Max
- Trapped Proton Model (see Table 10–5): NASA AP8 Min
- Solar Flare Proton Model (see Table 10–6): JPL 80% confidence (normalized to the 22nd solar cycle). This model is to be used for total dose assessment only. (Reference: New Interplanetary Proton Fluence Model; Joan Feynmán, et al; Journal of Spacecraft; Vol. 27, No. 4; July–August 1990)
- Solar Flare Proton Model (see Table 10–7): 3 October 1989 solar flares are to be used for Single Event Upset (SEU) assessment. (Reference: A Summary of the Recent Solar Proton Events; S. Gabriel and J. Feynman; JPL Memo 5217–89–183; 1 December 1989)

These models were used in conjunction with the SHIELDOSE computer program to generate the dose depth curves shown in Figure 10–2 of the GIIS. These curves define the shielding thickness required for the protection of instrument electronics at various radiation doses and include radiation design margins of both 1 and 2. The performance requirements specify a design margin of two for all parts being considered for the EOS Program.

Parts selected for instrument use must be in accordance with GSFC 420–05–01, Rev. A, EOS Performance Assurance Requirements for EOS General Instruments.

TABLE 10–4. TRAPPED ELECTRON SPECTRUM

(SOFIP computer program – NASA AE8 Max model)

Energy Level E (MeV)	Integral Fluence (Above E) (#/cm2/day)	Differential Flux at E (#/cm2/sec/MeV)
0.05	3.32e+10	2.76e+06
0.10	2.26e+10	2.15e+06
0.25	6.53e+09	8.64e+05
0.50	1.39e+09	1.36e+05
0.75	6.47e+08	2.33e+04
1.00	3.88e+08	9.14e+03
1.25	2.52e+08	5.15e+03
1.50	1.65e+08	3.34e+03
1.75	1.08e+08	2.20e+03
2.00	7.05e+07	1.41e+03
2.25	4.69e+07	9.06e+02
2.50	3.13e+07	6.45e+02
2.75	1.91e+07	4.53e+02
3.00	1.18e+07	2.76e+02
3.25	7.14e+06	1.70e+02
3.50	4.39e+06	1.07e+02
3.75	2.52e+06	6.81e+01
4.00	1.45e+06	4.01e+01
4.25	7.86e+05	2.38e+01
4.50	4.28e+05	1.31e+01
4.75	2.22e+05	7.18e+00
5.00	1.17e+05	3.94e+00
5.50	2.60e+04	1.32e+00
6.00	3.58e+03	3.01e–01

TABLE 10–5. TRAPPED PROTON SPECTRUM
(SOFIP computer program – NASA AP8 Min model)

Energy Level E (MeV)	Integral Fluence (Above E) (#/cm2/day)	Differential Flux at E (#/cm2/sec/MeV)
0.1	3.34e+08	5.50e+03
1.0	3.93e+07	2.08e+03
2.0	2.33e+07	1.19e+02
3.0	1.88e+07	4.28e+01
4.0	1.59e+07	2.71e+01
5.0	1.41e+07	1.80e+01
6.0	1.28e+07	1.14e+01
7.0	1.21e+07	7.51e+00
8.0	1.15e+07	6.36e+00
10.0	1.06e+07	4.87e+00
20.0	8.66e+06	1.80e+00
40.0	7.07e+06	8.29e–01
60.0	5.80e+06	6.72e–01
80.0	4.75e+06	5.48e–01
100.0	3.90e+06	4.56e–01
125.0	3.00e+06	3.65e–01
150.0	2.32e+06	2.78e–01
175.0	1.80e+06	2.13e–01
200.0	1.40e+06	1.64e–01
225.0	1.10e+06	1.27e–01
250.0	8.57e+05	9.94e–02
300.0	5.26e+05	6.16e–02
350.0	3.24e+05	3.76e–02
400.0	2.01e+05	2.31e–02
450.0	1.24e+05	1.09e–02

TABLE 10–6. SOLAR FLARE PROTON SPECTRUM FOR TOTAL DOSE ASSESSMENT

(80% confidence; normalized to the 22nd solar cycle)
(5 year active; 0.28 Geomagnetic constant)

Energy Level E (MeV)	Integral Fluence (Above E) (#/cm^2)	Differential Flux at E (#/cm^2/MeV)
1.0	1.87e+11	3.0160e+10
5.0	4.40e+10	1.1373e+10
10.0	2.00e+10	2.5246e+09
30.0	4.60e+09	3.6526e+08
50.0	2.10e+09	1.1209e+08
60.0	1.45e+09	5.0562e+07
100.0	5.80e+08	6.6734e+06

TABLE 10–7. SOLAR FLARE PROTON SPECTRUM FOR SEU ASSESSMENT

(One October 1989 Solar Flare, three flares required)

Energy Level E (MeV)	Integral Fluence (Above E) (#/cm^2)	Differential Flux at E (#/cm^2/MeV)
1.0	1.03e+11	2.140e+10
5.0	3.89e+10	1.064e+10
10.0	1.93e+10	3.286e+09
30.0	4.26e+09	4.337e+08
50.0	1.79e+09	7.850e+07
60.0	1.23e+09	4.863e+07
100.0	4.65e+08	1.318e+07

10.6 Single Event Upset and Latchup

The effect of an energetic ionizing particle, may be to deposit enough charge to either turn "on" or "off" a portion of an integrated circuit causing a Single Event Upset (SEU), or to turn on a parasitic Silicon–Controlled Rectifier (SCR) causing a Single Event Latchup (SEL). Where possible, electronic components should be immune to SEU/SEL, secondary breakdown, other thermal runaway effects, and snap–back induced by cosmic ray ions. This can be accomplished through the selection of parts which are either SEU immune or

possess an acceptably low level of SEU transients. Those transients which do occur must either have a minimally acceptable impact on the operation of the system or must be detected and handled at the system level.

Figure 10–3 of the GIIS defines the SEU environment and was derived for the EOS program by the CREME computer code. The solar minimum environment was used with weather index m=3.

In addition to SEU and SEL, two other Single Event Phenomena are of concern: Single Event Burnout (SEB) and Single Event Gate Rupture (SEGR). Both phenomena are of concern to power MOSFET Devices. The impact of a heavy ion on a power MOSFET can result in a catastrophic failure of the device called SEB. This phenomenon is caused by the "turning on" of the MOSFET parasitic npn transistor. If the collected charge resulting from the passage of a heavy ion through the MOSFET drain depletion region is sufficient to drive the parasitic transistor into a conducting state, and the applied V_{DS} is greater than the parasitic transistors BV_{ceo}, then the avalanche current can become regenerative and the resulting excessive localized power dissipation can cause device burnout.

SEGR occurs when a heavy ion passes through the gate oxide region of a MOSFET with sufficient gate–to–source or gate–to–drain bias. It is postulated that the ionized track left by the heavy ion causes a brief localized collapse of the drain depletion region resulting in a high electric field in the gate oxide. This high field can cause gate oxide degradation manifested by increased gate current.

International Rectifier rad hard power N–Channel MOSFETs are recommended to minimize any possibility of SEB or SEGR. N–Channel power MOSFET V_{DS} operating level should be derated as follows:

V_{DS} Rating	Maximum Safe V_{DS}
100V	70% V_{DS} Rating
200V	70% V_{DS} Rating
400V	43% V_{DS} Rating
500V	50% V_{DS} Rating

P–Channel power MOSFETs need not be rad hard for most applications. International Rectifier types (all voltages ratings) should not be operated above 75% of V_{DS}. Harris 100V parts should be limited to 60% of V_{DS}; data is not available on other types or manufacturers.

10.7 Atomic Oxygen

Atmospheric conditions encountered by the EOS–AM Spacecraft are important factors for mission planning and operations. Atomic oxygen (AO) is the main constituent of the atmosphere above the altitude of ~200 km. Erosion and changes to optical properties of materials used on spacecraft have been attributed to this chemically active species. Therefore, there is a need to include the effects of AO degradation in EOL design.

The Marshall Engineering Thermosphere (MET) Computer Program was utilized to calculate AO fluences for each month of the proposed EOS–AM mission. Figure 10–4 of the GIIS shows accumulative 5–year fluences of these calculations. These calculations cover all projected solar activity for solar cycle 23, and thus the peak period for the highest AO fluence was identified. The worst–case fluence for any five year mission life is 8.3 x 10^{20}. This fluence should be used to determine the AO effects on external surfaces.

10.8 Micrometeoroids

The worst–case meteoroid environment is derived from SSP 30425, Rev. A, Space Station Program Natural Environment Definition for Design, updating NASA SP–8013, Meteoroid Environmental Model – 1969. For meteoroid considerations, the environment is omnidirectional and all surface orientations are equally exposed to hazards. For nadir surfaces, the Earth blocking factor as described in SSP 30425 may be used. Hypervelocity impacts can cause penetration into electronics or damage to optics. This potential for damage, however, is considered to be less than that from space debris.

10.9 Space Debris

The worst–case space debris environment is derived from SSP 30425 updating NASA TM100 471, Orbital Debris Environment for Spacecraft Designed to Operate in Low–Earth Orbit. For space debris considerations, RAM and side–facing directions are of primary concern as potentially hazardous directions from which space debris may collide. Hypervelocity impacts can cause penetration into electronics or damage to optics. To avoid damage to sensitive components, standard design practices should be employed, such as reinforcing instrument faces exposed to RAM, locating delicate components away from RAM and side–faces most influenced by space debris, and orienting the instrument with the lesser surface area facing the RAM direction.

10.10 Magnetic Fields

10.10.1 Instrument–Generated Magnetic Fields

Instruments should be designed with minimal use of magnetic materials. The external magnetic field produced by the instruments will cause magnetic torques on the Spacecraft.

In addition, this magnetic field may interfere with the operation of the Spacecraft equipment and other instruments.

10.10.2 Magnetic Fields Documentation

Measurements of magnetic fields generated by the instrument will be documented in tabular form in the EICD.

10.10.3 Spacecraft Magnetic Fields

The Spacecraft magnetic fields are shown in Figure 10–4. The exact location of the torquers on the Spacecraft is under study.

10.11 EMI/EMC Requirements

The Spacecraft EMI/EMC requirements can be found in PS20005869, Electromagnetic Compatibility Control Plan for the EOS–AM Spacecraft. Additionally, 20005400, Electromagnetic Compatibility Handbook, can also be consulted for additional explanation.

10.12 Spacecraft Charging

An exposed high–voltage surface can interact with ambient plasma, resulting in a current loop being set up and diverting power from the Spacecraft power system. It is recommended that exposed elements, including cabling and connections, which carry high voltages ($V \geq 200$ volts) be insulated from the plasma.

10.12.1 Instrument Electrostatic Discharge Control

The interaction of the Spacecraft with the ambient plasma and with the highly energetic electron fluxes associated with the auroral regions results in Spacecraft net charging and differential charging of the outer surfaces of the Spacecraft. For the Spacecraft immersed in the plasma, the charging potential will be ~0 to –120V with respect to the plasma. At irregular intervals, on the order of a few times a year, higher potentials of hundreds of volts to a few kilovolts may be encountered for brief periods of less than 10 seconds in the auroral region.

10.12.2 Spacecraft Electrostatic Discharge Analysis

An electrostatic charging analysis will be performed for the Spacecraft. The Spacecraft Provider, using the NASCAP LEO and POLAR computer programs, will determine the potential distribution around the Spacecraft, possible discharge locations, and solar array interaction with ambient plasma. The probability of an enhanced–electron–emission

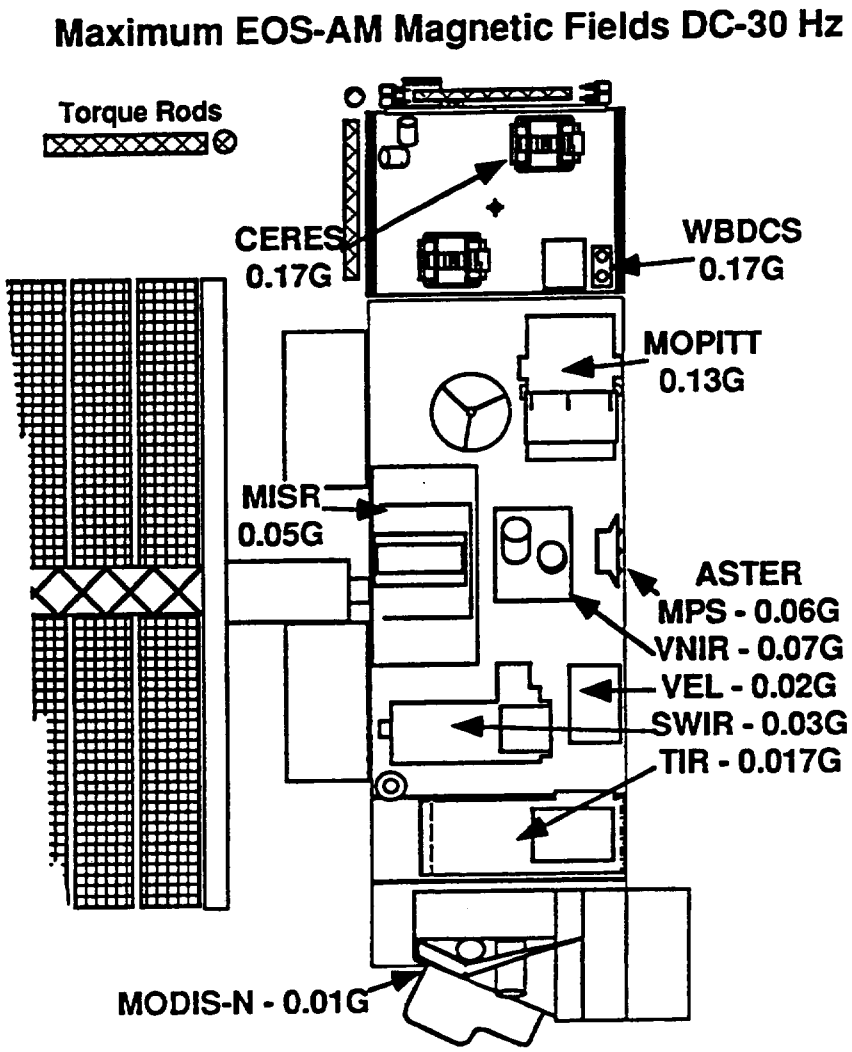

Figure 10–4. Observatory Worst–Case Magnetic Fields

discharge will be estimated as a function of potential difference. The charging effects on Spacecraft subsystems will be estimated. The effects of plasma associated with auroral regions on the Spacecraft and on instruments whose operation could be affected by the electrostatic charging and discharging will be modeled using NASCAP POLAR. Using NASCAP LEO, potential distribution at the Spacecraft solar array cell interconnect–coverslip interface will be calculated. Accommodation measures will be recommended, as required.

10.12.3 Spacecraft External Surface Charging

External surfaces include thermal control coatings and thermal blankets. For instruments which have been determined to be sensitive to ESD and require a reduced surface conductivity, it is recommended that the surface resistivity of coatings applied over dielectric surfaces be $\leq 10^8$ ohms/square, and the thermal coatings applied over metal surface have a bulk resistivity of 10^{11} ohms–cm (assuming a 4 mil thick coating).

APPENDIX A

20 DELETED

(This page intentionally left blank.)

APPENDIX B

30 ACRONYMS AND ABBREVIATIONS

AC	alternating current
ACE	Attitude Control Electronics
ACS	Attitude Control System
A/D	analog–to–digital
ANSI	American National Standards Institute
AO	atomic oxygen
APID	Application Process Identification
ATC	Absolute Time Command
AWG	American Wire Gauge
BAT	Bench Acceptance Test
BCRTM	Bus Controller, Remote Terminal, and Monitor
BPC	Battery Power Conditioner
BC	Bus Controller
BDU	Bus Data Unit
bps	Bits Per Second
C	Centigrade
C&DH	Command and Data Handling
C&DHS	Command & Data Handling Subsystem
C&T	Command and Telemetry
CADU	Channel Access Data Unit
CCHP	Constant Conductance Heat Pipe
CCSDS	Consultive Committee for Space Data Systems
CDV	Command Dispatch Verification
CEV	Command Execution Verification
CLCW	Command Link Control Word

CLTU	Command Link Transfer Unit
cm	centimeter
CMD	Command
COMM	Communications
COMMS	Communications Subsystem
COP	Command Operations Procedure
CPHTS	Capillary Pumped Heat Transport System
CRC	Cyclic Redundancy Check
CRV	Command Receipt Verification
C&T	Command and Telemetry
C&T ICD	Command and Telemetry Interface Control Document
CTIU	Command and Telemetry Interface Unit
CVCDU	Coded Virtual Channel Data Unit
DAS	Direct Access System
DC	direct current
DET	Direct Energy Tranfer
DOD	Depth of Discharge
DSN	Deep Space Network
EAS	Electrical Accommodations Subsystem
ECL	Emitter Coupled Logic
EICD	Electrical Interface Control Document
EM	Equipment Module
EMC	Electromagnetic Compatibility
EMI	Electromagnetic Interference
EOL	End–of–Life
EOS	Earth Observing System
EOS–AM	Earth Observing System AM Mission

EOSDIS	EOS Data and Information System
EPS	Electrical Power Subsystem
ESD	Electrostatic Discharge Control
F/W	firmware
FARM	Frame Acceptance and Reporting Mechanism
FDB	Fuse and Distribution Box
FDDI	Fiber Distributed Data Interface
FDF	Flight Dynamics Facility
FDIR	Fault Detection, Isolation, & Recovery
FOP	Frame Operations Procedure
FORTRAN	a program language
FOS	Flight Operations Segment
FOT	Flight Operations Team
FOV	Field of View
FRAM	Frame Acceptance and Reporting Mechanism
FSW	flight software
FSWS	Flight Software System
GIIS	General Instrument Interface Specification
GIS	General Interface Specification
GMT	Greewich Mean Time
GN	Ground Network
GN&C	Guidance, Navigation, & Control
GN&CS	Guidance, Navigation, & Control Subsystem
GSE	Ground Support Equipment
GSFC	Goddard Space Flight Center
HCE	Heater Controller Electronics
HGA	High Gain Antenna

H/K	Housekeeping
HPHX	Heat Pipe Heat Exchanger
hrs	hours
HRDL	High Rate Data Link
HRI	High Rate Data Interface
HRM	High Rate Modulator
HSDU	High Speed Data Unit
H/W	hardware
IMP	Instrument Mounting Plate
I&T	Integration and Test
I&T	Integration and Test Interface Control Document
I/O	input/output
ICD	Interface Control Document
ID	identifier
INSTR	Instrument
IRU	Inertial Reference Unit
I&T	Integration and Test
kbps	kilobits per second
KM	Kinematic Mount
LAN	Local Area Network
LPC	Load Power Conditioner
LRTR	Low Rate Tape Recorder
LV	launch vehicle
L/V	launch vehicle
mA	milliampere
MAC	Media Access Control
Mb	megabit

Mbps	Megabits per second
Mbyte	megabyte
MET	Marshall Engineering Thermosphere Model
MeV	Mega electron Volts
MHz	Megahertz
MICD	Mechanical Interface Control Document
MIL–STD	Military Standard
MLI	Multilayer Insulation
mm	millmeter
MO	Master Oscillator
MPDU	Multiplexed Protocol Data Unit
MSB	Most Significant Bit
msec	millisecond
MUX	Multiplexer
N/A	not applicable
NASA	National Aeronautics and Space Administration
NASCAP LEO	NASA Charging Analyzer Program/Low Earth Orbit
NASCAP POLAR	NASA Charging Analyzer Program/Polar Regions
NRZI	Non–Return to Zero Invert
NSPAR	Non–standard Parts Approval Request
O_2	Oxygen
OBC	On–Board Computer
OS	Operating System
PAPL	Program Approved Parts List
P/B	playback
PB	playback
PCAPDU	Physical Channel Access Protocol Data Unit

PDU	Power Distribution Unit
PECL	Pseudo Emitter Couple Logic
PLL	Phase Locked Loop
PMAD	Power Management and Distribution
PPR	Prime Power Reference
R/T	real time
RAM	Random Access Memory
RF	Radio Frequency
ROM	Read Only Memory
RT	Remote Terminal
RTC	Real Time Command
RTCS	Relative Time Command Sequence
RTM	Reduced Thermal Model
RTS	Real Time Sequence
RWA	Reaction Wheel Assembly
SAD	Solar Array Drive
SCC	Spacecraft Controls Computer
SCR	Silicon–Controlled Rectifier
SCT	Stored Command Table
sec	second
SEL	Single Event Latchup
SEU	Single Event Upset
SFE	Science Formatting Equipment
SHDP	Safe Hold Digital Processer
SMS	Structures and Mechanisms Subsystem
SN	Space Network
SPR	Secondary Point Reference

sq. in.	square inches
SRP	Signal Reference Plane
SSA	S–band Single Access (TDRSS)
SSB	Solid State Buffer
SSR	Solid State Recorder
SSU	Sequential Shunt Unit
STD	standard
TBD	To Be Determined
TBR	To Be Reviewed
TBS	To Be Supplied
TCS	Thermal Control Subsystem
TDRSS	Tracking & Data Relay Satellite System
TICD	Thermal Interface Control Document
TLM	Telemetry
TMON	Telemetry Monitor
TONS	TDRSS Onboard Navigation System
TQCM	Thermal Quartz Crystal Microbalance
TR	Tape Recorder
UIID	Unique Instrument Interface Document
UTC	Universal Time Code
V	volt
VC	Virtual Channel
VCID	Virtual Channel Identification
VCDU	Virtual Channel Data Unit
VCGW	Virtual Channel Gateway
Vdc	Volt Direct Current
W	Watt
XPND	S–band Transponder

(This page intentionally left blank.)

APPENDIX C

40 SUGGESTED 120–VOLT PARTS LIST

Table C–1 is a list of 120–volt parts which meet the Astro Space engineering design standards. However, only three have corresponding GSFC–approved NSPARs. It is important to note that an approved NSPAR indicates approval for a given part in a particular useage only. Hence, Astro Space cannot guarantee that parts approved through the NSPAR process may be used in an application other than that specified in the original NSPAR.

TABLE 40–1. SUGGESTED120–VOLT PARTS LIST

Part Number	Part Description	Vendor Name	NSPAR Number	Astro Space Source Control Drawing Number	Substitute Part	Remarks
1N6659	Diode, 220V	SSDI	027	23005792	20007334P1 (UFR7020, 200V)	Approved by GSFC
IRHM 7250	MOSFET, 200V	IR	096	20002751	None identified	Approved by GSFC
IRHM7450	MOSFET, 500 V	IR	096	20002751	None identified	Approved by GSFC
P600L	Fuses (1/8 A through 15 A) @ 135VDC	Mepcopal	119	20034877	1970521–XX (FM08 fuse)	Approved by GSFC
AP44P	Relay (15 Amp @ 150VDC)	Kilovac	039	20028835	2002751P2 (200V MOSFET)	Qual in Process at Vendor. Approved by GSFC
20009804P56	Capacitor, Cer., 200V, 12mf	KEMET/ AVX	058A	20009804	CFR13ALEXXXP (400V)	Approved by GSFC
20009804P55	Capacitor. Cer. 200V, 10mf			20009804		
20009804P50	Capacitor, Cer. 200V, 3.9mf			20009804		
20009804P54	Capacitor, Cer. 200V, 8.2mf			20009804		
20009804P43	Capacitor, Cer. 200V, .82mf			20009804		
20009804P40	Capacitor, Cer. 200V, .47mf			20009804		
CFR13ALCXXXKP	Capacitor	Elec. Concepts/ Sprague	084A	20041803	CFR13AIEXXXKP (400V)	Approved by GSFC

(This page intentionally left blank.)

APPENDIX D

50 MISSION PHASES AND OPERATING MODES

50.1 Mission Phases and Operating Modes Overview

50.1.1 Mission Phases and Operating Modes Definitions

The EOS mission can be defined by seven chronological mission phases: (1) Prelaunch, (2) Launch/Ascent, (3) Orbit Acquisition Initialization, (4) Orbit Acquisition, (5) Operational Initialization, (6) Operational, and (7) End–of–Mission. Each mission phase represents a pre–defined time period during which a set of interrelated operations and activities are performed. Figure 50–1 provides a top–level description of the EOS mission phases.

Each mission phase is characterized by the "system" operating modes used (or available) to support that mission phase. The system mode is defined by the minimum functional and

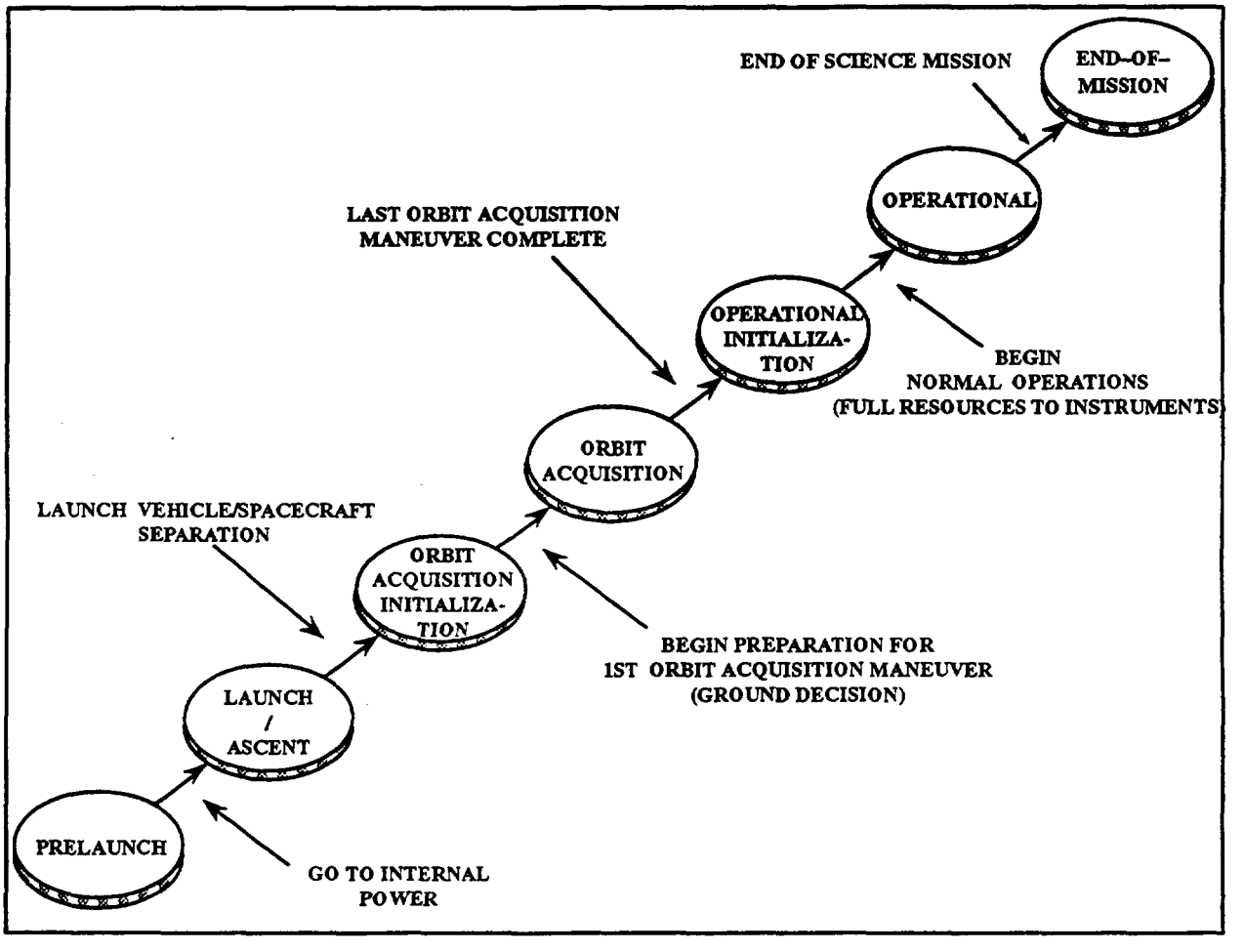

Figure 50–1. Spacecraft Mission Phases

performance capabilities that are required to satisfy mission conditions and constraints. System modes include (1) Ground Test Mode, (2) Launch/Ascent Mode, (3) Standby Mode, (4) Science Mode, (5) Delta–V Mode, (6) Survival Mode, and (7) Safe Mode.

A mission phase typically contains more than one system operating mode. The Operational Mission phase, for example, includes the Science Mode, Delta–V Mode, Standby Mode, Survival Mode and Safe Mode. At any given time during a specific mission phase, only one of the system modes available to that phase is in effect. In addition, a particular operating mode may be used during the different mission phases. The Spacecraft Bus' Safe Mode can be used in any mission phase with the exception of Prelaunch and Launch/Ascent. Primary system operating modes are defined as scheduled or planned operating modes for that mission phase. Back–up system modes are unplanned modes that are entered following an anomaly. Examples of primary mission modes include Science and Delta–V modes, while examples of back–up modes include Survival and Safe modes.

Table 50–1 correlates mission phases with system operating modes. The types of system modes used during a particular mission phase are based on the activities required during that phase. The functional and performance requirements for system operating modes and criteria for mode transitions are described in Section 50.2.

TABLE 50–1. SPACECRAFT SYSTEM MODES

System Mode	Spacecraft Mission Phase						
	Prelaunch	Launch/ Ascent	Orbit Acquisition Initialization	Orbit Acquisition	Operational Initialization	Operational	End of Mission
Ground Test Mode	P	B					
Launch/Ascent Mode		P	P				
Standby Mode			P	P	P	B	
Science Mode					P	P	
Delta–V Mode				P	P	P	
Survival Mode		B	B	B	B	B	P
Safe Mode		B	B	B	B	B	B

Legend: P Primary mode
B Backup mode

50.1.2 Mode Architecture

A system mode is an operational configuration with a set of minimum requirements and resources that can be allocated to the subsystems. Higher functionality than the minimum

within a given mode is possible, up to the minimum levels of the next higher mode. The system mode is not a predefined combination of "subsystem modes" or hardware configurations. In general, there are multiple combinations of Spacecraft Bus hardware and subsystem modes that can be chosen to meet system mode requirements.

50.1.3 Mode Transition Overview

Transition between operating modes will be initiated by either (1) ground command (stored or real–time) or (2) on–board failure detection logic. Non–time–critical faults will be handled by ground command. The on–board failure detection logic is the Spacecraft Failure Detection, Isolation and Recovery (FDIR) system which is capable of reconfiguring hardware and software in response to time–critical Spacecraft faults. The state diagrams and entry/exit criteria provided in this appendix serve as the initial definition for FDIR functionality.

Typically a sequence of commands must be executed in order to effect the transition from one mode to another. Also, the point of transition is not explicitly defined as a particular event. Rather, the transition will be considered complete when the Spacecraft performance has been verified as capable of providing the resources and performing the functions required by the mode that was entered.

The transition between primary modes will typically be initiated by ground command. For example, during the Operational Mission Phase, ground command will be required to initiate a transition from the Science Mode to the Delta–V Mode. In certain cases, transition between two primary modes may be accomplished autonomously by on–board logic. For example, in the Operational Initialization Phase, both Standby and Science Modes are primary modes, used for subsystem and Instrument checkout, respectively. If a high rate data system failure occurs during Instrument checkout, an autonomous transition may occur from Science Mode to Standby Mode.

The transition between a primary mode and a back–up mode can be initiated by ground command or may be autonomously initiated by on–board logic. Following violation of pre–selected criteria the FDIR system will autonomously initiate a transition from a primary mode (e.g., Science Mode) to a back–up mode (e.g., Safe Mode). In the event of SCC failure, loss of the "I'm OK" signal from the SCC will cause the attitude control electronics (ACE) to take control of the Spacecraft attitude and thereby transition into the Safe Mode. In this type of Safe Mode entry, equipment operating during the Safe Mode will be preselected to reflect the most current equipment availability. The other autonomous transition into Safe Mode occurs upon detection by GN&C FDIR of an attitude error beyond

a pre–defined threshold. In this case, the ACE again controls the attitude, but the SCC continues to control other Spacecraft functions.

When the SCC is operational, it is also possible to have autonomous transitions from higher mode sublevels to lower sublevels within the same mode. An example of this is Safe Mode, in which the SCC can control the autonomous transition from earth pointing to sun pointing.

Exit from a back–up mode to a functionally more capable mode will be by ground command only.

50.2 System Mode Requirements

The system mode requirements section contains functional and performance requirements, resource allocations, and transition criteria for the operating modes. Sections 50.2.1 to 50.2.7 provide functional descriptions, transition criteria, subsystem requirements, and operations requirements for the system modes. Instrument specific information, such as available resources and mode transition notifications, along with appropriate Instrument response to these conditions, is covered in Section 50.2.8.

50.2.1 Ground Test Mode

50.2.1.1 Functional Overview

The Spacecraft will be in Ground Test Mode during the Prelaunch Phase of the mission, which starts with the integration of the Spacecraft with the launch vehicle and ends with the transition to internal power in preparation for launch. In this mode the Spacecraft is essentially in a "check–out" state, receiving power via the launch vehicle "T–minus–zero" (T–0) umbilical. The readiness of the Spacecraft for launch is established by verifying the aliveness of redundant subsystem hardware aliveness and demonstrating redundant power and signal paths to major components (although not by using every possible command for a given path). During this mode, the batteries are continuously charged, and equipment is powered as required for low–rate commanding and telemetry. Telemetry is provided to the GSE via the T–0 umbilical.

50.2.1.2 Entry/Exit

Entry: Nominal entry into the Ground Test Mode occurs following integration of the Spacecraft with the launch vehicle. After integration with the launch vehicle, the Spacecraft will be powered ON and housekeeping subsystems will initialize to default conditions. The Spacecraft Checkout Station (SCS) will load the SCC software and stored command

sequences. Commands to configure the Spacecraft for launch will be sent from the SCS via the umbilical.

Entry into Ground Test Mode can also occur from Launch/Ascent Mode in the contingency situation where the launch is aborted or delayed due to a major anomaly after going to internal power and prior to liftoff. In this unique situation, the T–0 umbilical may be reconnected to the Spacecraft, in which case the mission phase would transition from Launch/Ascent back to Pre–Launch, and the Spacecraft would again receive commands and power through the umbilical.

Exit: Exit from this mode will occur upon transition to internal power (resulting in the transition to the Launch Phase), approximately five minutes before lift–off.

Table 50–2 summarizes criteria for transition to the Ground Test Mode from an initial mode (allowable entry point) and exit from the Ground Test Mode to another mode (allowable exit point).

TABLE 50–2. GROUND TEST MODE TRANSITION

Allowable Entry Points	**Initiation**	**Criteria**
Begin Prelaunch	Ground Command	– Integration to launch vehicle is complete –All systems ready to commence ground testing
Launch/Ascent Mode	Ground Command	–Abort or delay launch
Allowable Exit Points		
Launch/Ascent Mode	Ground Command	–Transition to internal power –All systems nominal

50.2.1.3 Minimum Subsystem Requirements

GN&CS: All GN&C components will be powered on to support limited testing of the Guidance Navigation & Control Subsystem and for launch readiness.

C&DHS: The Command & Data Handling Subsystem will monitor Spacecraft equipment and instrument telemetry to ensure health and safety. Commands received via the umbilical will be distributed to equipment and instruments as necessary. Health and safety telemetry will be distributed for transmission via the umbilical. The Spacecraft Bus data processing and distribution will be SCC/CTIU based. Limited testing of the C&DHS will be supported.

TCS: The Thermal Control Subsystem will maintain operational housekeeping equipment within operating temperature limits and non–operating housekeeping equipment and instruments within survival temperature limits. Limited testing of the TCS will be supported.

EPS: The Electrical Power Subsystem will interface with the launch vehicle T–0 power umbilical via the EAS. The EPS will distribute the power from the umbilical to operating and survival equipment. The EPS will support battery charging. Limited testing of the EPS will be supported.

COMMS: The Communication Subsystem will accommodate a hardline telemetry link through the launch vehicle T–0 umbilical. Limited testing will include an RF test of the omni antennas and an end–to–end test of the launch/ascent link (i.e., a direct connection to the Launch Vehicle telemetry stream).

PROPS: The propulsion subsystem will be initialized to provide thruster operations as necessary for post–separation maneuvers. The Propulsion Module Electronics Assembly (PMEA) will be operational, and engine catbed heaters for six 1–lb thrusters will be enabled. Telemetry will be provided to indicate propellant–feed pressures and temperatures, valve temperatures, and latching valve position indication. Limited testing of the Propulsion Subsystem will be supported.

SMS: Limited testing of the Structure and Mechanisms Subsystem will be supported. This involves monitoring of telemetry to verify operational readiness of deployment mechanisms and drive motors.

EAS: The EAS will provide power and data distribution for the Spacecraft via harnessing. Limited testing of the Electrical Accommodation Subsystem will be supported. This involves verification of power and signal distribution paths to major components, especially those needed for post–separation activities. Testing will also involve monitoring of telemetry to verify operational readiness of arming plugs.

50.2.1.4 Ground Test Mode Operations

While in Ground Test Mode during the Prelaunch Mission Phase, the Spacecraft will be undergoing prelaunch test at the Vandenberg Air Force Base. The Martin Marietta Integration & Test (I&T) group will be responsible for Spacecraft testing and control, and the FOT will be provided with the capability to monitor Spacecraft telemetry from the launch site. All bus housekeeping equipment will undergo a short form verification during the Ground Test Mode to verify subsystem integrity and functionality. External stimuli will not be used. Health and safety telemetry will be verified to be within allowable ranges, and

non–operating equipment may be powered ON for aliveness checks. Instrument science will not be tested during this mode, but the integrity of instrument interfaces will be verified. (More extensive physical checks and Spacecraft performance tests will be performed at the launch site prior to integration of the Spacecraft with the launch vehicle.) The software and data tables will be loaded with the appropriate parameters for Orbit Acquisition Initialization and Orbit Acquisition Phase activities.

In the event that the launch is postponed after having gone to internal power, I&T will be responsible for reconfiguring the Spacecraft back to the Ground Test Mode from Launch/Ascent Mode, and the Launch Vehicle contractor will be responsible for reconnecting the T–0 umbilical.

50.2.2 Launch/Ascent Mode

50.2.2.1 Functional Overview

The Launch/Ascent Mode is the Spacecraft's operational configuration during and immediately following the boost to the injection orbit on the launch vehicle. Once separation from the launch vehicle is detected by on–board logic and telemetry monitoring, the Spacecraft will use on–board logic to perform four early mission activities, including: (1) an attitude maneuver to obtain an earth–oriented attitude, (2) deployment of the solar array to support the bus load and begin battery recharge, (3) establishment of an S–band communication link, primarily with TDRSS via the omni antennas, and (4) deployment of the high gain antenna. All of these preprogrammed activities shall, as a backup, accept ground commanded initiation, provided that a communication link to the ground has been established.

Launch/Ascent Mode is a primary mode in both the Launch/Ascent and Orbit Acquisition Initialization Phases. This period begins with the transition to internal power on the launch pad and ends when the Spacecraft is ground commanded into Standby Mode after the High Gain Antenna (HGA) is deployed in the injection orbit. All instruments are powered off with survival heater enabled. Housekeeping equipment is powered as required to accomplish the early mission activities and for low–rate telemetry commanding and telemetry, with survival and operational heaters enabled.

During Launch/Ascent Phase, the Spacecraft operates on internal battery power (i.e., batteries are continually discharging), and only those components essential for monitoring and transmitting Spacecraft health data, maintaining Spacecraft survival, and required for the earth acquisition maneuver are powered at this time. During the Orbit Acquisition

Initialization Phase, a stable and operational Spacecraft configuration following separation from the launch vehicle will be established. Upon detection of separation from the launch vehicle, on–board logic will be activated to perform the four major early mission activities described above.

In addition to triggering the execution of the four early mission activities, the detection of separation from the launch vehicle will also enable the FDIR algorithms necessary for the autonomous transition to Survival Mode or Safe Mode in the event of certain failures. These algorithms will remain enabled throughout all subsequent mission phases.

Launch/Ascent Mode is a new mode which was defined because Survival Mode did not adequately represent the operational configuration and power consumption of the Spacecraft during the early mission phases (Launch/Ascent and Orbit Acquisition Initialization Phases). Although the Spacecraft power level in Launch/Ascent Mode is near the minimum power level of Survival Mode, it is possible to transition to Survival Mode by shedding some non–essential housekeeping loads such as the solid state star trackers and all propulsion subsystem equipment except for the pressure transducer.

50.2.2.2 Entry/Exit

Entry: Ground operators will switch the Spacecraft to the Launch/Ascent Mode when they disconnect the T–0 umbilical, causing the Spacecraft to switch to internal power. If an anomaly occurs after separation from the launch vehicle that causes the Spacecraft to enter Survival or Safe Mode, Launch/Ascent Mode may be re–entered by ground command.

Exit: Nominally, exit from Launch/Ascent Mode to Standby Mode will be ground commanded when all of the major early mission events (e.g., earth acquisition, S–band communication link acquisition, energy balance, and HGA deployment) have been successfully completed. In the event that the launch is aborted or delayed due to a major anomaly prior to liftoff, ground operators will reconnect the T–0 umbilical (to switch back to external power supplies) and transition the Spacecraft from Launch/Ascent Mode to Ground Test Mode. In this event, the mission phase will transition from Launch/Ascent back to Pre–Launch. If an anomaly occurs after the Spacecraft has separated from the launch vehicle, the transition from Launch/Ascent Mode to either Survival Mode or Safe Mode may be commanded either by autonomous on–board logic or by ground command.

Table 50–3 summarizes the criteria for transition to the Launch/Ascent Mode from the allowable entry points and for exit from the Launch/Ascent Mode to another mode (the allowable exit points).

TABLE 50–3. LAUNCH/ASCENT MODE TRANSITION

Allowable Entry Points	Initiation	Criteria
Ground Test Mode	Ground Command	–Transition to internal power –All systems nominal
Survival Mode Safe Mode	Ground Command	–Ground criteria
Allowable Exit Points		
Ground Test Mode	Ground Command	–Abort or delay launch
Survival Mode	On–Board Logic (Autonomous)	–Separation from launch vehicle complete –TMON Load Shed Criteria
Safe Mode	On–Board Logic (Autonomous)	–Separation from launch vehicle complete –Loss of SCC "I'm OK" and/or –GN&C FDIR (attitude error)
Survival Mode Safe Mode Standby Mode	Ground Command	–Ground criteria

50.2.2.3 Minimum Subsystem Requirements

GN&CS:

- Launch/Ascent Phase – The GN&CS will provide attitude knowledge during launch ascent. The GN&CS will be prepared for earth acquisition maneuvers immediately following separation from the launch vehicle.

- Orbit Acquisition Initialization Phase – The GN&CS will provide attitude determination and navigation. The GN&CS will provide coarse earth pointing control that is sufficient for allowing communication links to be established between the HGA and TDRSS. The GN&CS navigation functions will be supported via either uplinked ephemeris or a TDRSS/TONS link, as available.

C&DHS:

- Launch/Ascent Phase – The C&DHS will monitor Spacecraft equipment and instrument telemetry to ensure health and safety. Commands will be distributed to equipment. Data will be distributed

for S–band transmission and for storage on a single operational SSR data control unit. The Spacecraft Bus data processing and distribution will be SCC/CTIU based.

- Orbit Acquisition Initialization Phase – The Spacecraft Bus data processing and distribution will be SCC/CTIU based. The SCC will distribute the stored commands necessary to perform the earth acquisition maneuver, acquire a TDRSS/TONS link, deploy the solar array, and deploy the high gain antenna. Commands will be distributed to instruments and equipment. The C&DHS will monitor Spacecraft equipment and instrument telemetry to ensure health and safety. Data will be distributed for both S–band transmission and storage on a single operational SSR data control unit.

TCS:

- The TCS will maintain operating temperatures on operational housekeeping equipment and survival temperatures for non–operational housekeeping equipment and instruments.

EPS:

- Launch/Ascent Phase – The EPS will provide the necessary power to operating and survival equipment via batteries.
- Orbit Acquisition Initialization Phase – The EPS will provide the necessary power to operating and survival equipment (via batteries until solar array deployment and attainment of Spacecraft energy balance). The EPS will support solar array deployment and slew/rotation to track the sun. The EPS will begin recharging the batteries as soon as possible after solar array deployment. In the anomalous condition that sun–pointing Safe Mode is entered from Launch/Ascent Mode, the EPS will support acquisition of a solar array sun pointing attitude from an arbitrary orientation.

COMMS:

- Launch/Ascent Phase – The COMM subsystem will support a communication link via direct connection to the launch vehicle telemetry stream.
- Orbit Acquisition Initialization Phase – The establishment of low–rate S–band communications links via the omnis with TDRSS and/or GN will be supported. The maintenance of these links will also be supported. The establishment of an S–band communication link via

the HGA with TDRSS will be supported (after successful HGA deployment), as well as the maintenance of these links. The COMM subsystem will support the uplink of backup ephemeris for orbit determination. The COMM subsystem will also provide for the acquisition of the TONS link via the omnis and/or the HGA and maintenance of the link, to support orbit determination via TONS.

PROPS:

- Launch/Ascent Phase – The propulsion subsystem will be initialized to provide thruster operations as necessary for tip–off correction maneuvers, earth acquisition, and attitude control. The PMEA and engine catbed heater for six 1–lb thrusters will be enabled.

EAS:

- The EAS will provide power and data distribution for the Spacecraft via harnessing.

50.2.2.4 Launch/Ascent Mode Operations

The FOT will fully monitor Spacecraft operation during Launch/Ascent Mode because of the critical nature of the early mission activities. The FOT will review the Spacecraft telemetry received via the Launch Vehicle when it becomes available. Spacecraft detection of separation from the Launch Vehicle will initiate the autonomous execution of preprogrammed Orbit Acquisition Initialization activities. After establishment of an S–Band link (using omni antennas) with the ground via TDRSS, the FOT will monitor these Spacecraft activities. The FOT will send ground commands as necessary to establish a stable Spacecraft on–orbit configuration with an earth–oriented attitude.

50.2.3 Standby Mode

50.2.3.1 Functional Overview

The Standby Mode is a "non–science" mode that is used during subsystem check–out, during quiescent periods, or as back–up to the Science Mode.

Standby Mode is a primary mode during the Orbit Acquisition Initialization, Orbit Acquisition, and Operational Initialization Phases. During the Orbit Acquisition Initialization Phase, the Spacecraft will be in Launch/Ascent Mode until it receives ground commands to enter Standby Mode, nominally after deployment of the HGA. During the Orbit Acquisition Phase, both Standby and Delta–V Modes are primary system modes. Typically, the system will be in Standby Mode, except during propulsive maneuvers, when it

will be in Delta–V mode. During the Operational Initialization Phase, the Spacecraft will normally be in Standby Mode except during propulsive maneuvers and during checkout of instrument science data downlink.

As a backup mode in the Operational Phase, Standby Mode is used when a problem arises with the ability to collect or transmit instrument science data.

Instrument science data collection and transmission is not supported in Standby mode. Standby Mode has full power resources, so that housekeeping and instrument loads will not be shed upon entering this mode. As required during subsystem checkout, both primary and redundant units of components may be powered. The combination of state variables for this mode is defined as Power Load (on), Computer (SCC), Delta–V (no), Attitude (earth), and Science Data (no).

50.2.3.2 Entry/Exit

Entry:

During the Orbit Acquisition Initialization Phase, the Spacecraft will be ground commanded into Standby Mode once all of the major early mission of events within Launch/Ascent Mode have been accomplished.

During the Orbit Acquisition Phase, the transition from Delta–V Mode to Standby Mode will be ground commanded after propulsive maneuvers.

During the Operational Initialization phase, the Spacecraft will be ground commanded into the Standby Mode and will remain in this mode during system/ subsystem check–out.

During the Operational Phase, the Spacecraft may be ground commanded into the Standby Mode for quiescent periods or for ground recovery from a non–time–critical fault in the high rate data system. The Standby Mode may be utilized during the ground commanded transition from Survival Mode or Safe Mode back to a higher operating state. Autonomous entry into Standby Mode may be made following a system type failure that prevents or hinders science operation, but does not require significant shedding of Spacecraft loads. Failures which would cause autonomous entry include: 1) HGA FDIR algorithm stops SCC commanding of the HGA if the gimbal motion is grossly inconsistent with commands, 2) TMON disables SCC commanding to the HGA if the HGA gimbal becomes too hot, and 3) TMON detects other problems with the high rate data system that could possibly be critical to associated equipment, such as the solid state recorder.

Exit: Exit from the Standby Mode, to a higher or same level mode, (e.g., to the Science Mode or Delta–V Mode) will be initiated by ground command. In event of a severe power

fault, autonomous transition into Survival Mode will be made. Autonomous transition to Safe Mode will occur upon loss of the SCC "I'm OK" or by GN&C FDIR.

Table 50–4 summarizes criteria for transition to the Standby Mode from an initial mode (allowable entry point) and exit from the Standby Mode to another mode (allowable exit point).

TABLE 50–4. STANDBY MODE TRANSITION

Allowable Entry Points	Initiation	Criteria
Any Mode	Ground Command	–Ground criteria
Science Mode	On–Board Logic (Autonomous–SCC) Non–Time–Critical High Rate System Fault (TBD)	–HGA FDIR or TMON –High Rate Data System TMON (TBD)
Allowable Exit Points		
Any Mode	Ground Command	–Ground criteria
Survival Mode	On–Board Logic (Autonomous–SCC)	–TMON Load Shed Criteria
Safe Mode	On–Board Logic (Autonomous)	–Loss of SCC "I'm OK" –GN&C FDIR (attitude error)

50.2.3.3 Minimum Subsystem Requirement

GN&CS:

- Orbit Acquisition Initialization and Orbit Acquisition Phases – The GN&CS will provide attitude determination and navigation. The GN&CS will provide coarse earth pointing control that is sufficient for allowing communication links to be established between the HGA and TDRSS. The GN&CS primary navigation functions will be supported via either uplinked ephemeris or a TDRSS/TONS link, as available. GN&CS checkout activities will be supported.

- Operational Phase – The GN&CS will provide attitude determination and navigation. Earth–oriented pointing will be maintained. The GN&CS primary navigation functions will be supported via the use of TONS, or as a backup, via uplinked ephemeris, as applicable. GN&CS checkout activities will be supported.

C&DHS: The C&DHS will monitor Spacecraft equipment and instrument telemetry to ensure health and safety. Commands will be distributed to instruments and equipment. Data will be distributed for both S–band transmission and storage on the solid state

recorder (SSR). The Spacecraft Bus data processing and distribution will be SCC/CTIU based. Low–rate data handling will be provided. C&DHS checkout activities will be supported.

TCS: The TCS will maintain operating temperatures on all operational housekeeping equipment and instruments and survival temperatures on all non–operational housekeeping equipment and instruments. In the Operational Phase, the TCS may provide limited heat rejection for instruments requiring centralized thermal control. TCS checkout activities will be supported.

EPS:

- Orbit Acquisition Initialization and Orbit Acquisition Phases – The EPS will provide necessary power to operating and survival equipment while maintaining a positive energy balance. Essential power for instruments in non–operational survival will be provided. Solar array slew and rotation (sun tracking) will be provided. EPS checkout activities will be supported.

- Operational Phase – The EPS will provide necessary power to operating and survival equipment while maintaining a positive energy balance. Essential power for instruments in operational standby will be provided. Solar array slew and rotation (sun tracking) will be provided. EPS checkout activities will be supported.

COMMS: The maintenance of S–band communications links with TDRSS and/or GN via the omnis will be supported as a minimum. Although not a minimum requirement, the acquisition and maintenance of a TDRSS HGA S–band link will be accommodated as capable once the HGA is deployed during the Orbit Acquisition Initialization Phase. The COMM subsystem will provide for the maintenance of the TONS link to support coarse orbit determination via TONS, and it will also support the uplink of backup ephemeris for orbit determination, as applicable. COMM subsystem checkout activities will be supported.

PROPS: The propulsion subsystem will support 1–lb thruster operations to provide impulsive torques for on–orbit three–axis attitude control and reaction wheel unloading. Propulsion subsystem checkout activities will be supported.

EAS: The EAS will provide power and data distribution for the Spacecraft via harnessing.

50.2.3.4 Standby Mode Operations

The Standby Mode is one of the primary modes of the Orbit Acquisition Initialization, Orbit Acquisition, and Operational Initialization Phases. It is also a back up mode of the Operational Phase.

During the Orbit Acquisition Initialization Phase, the main function of the FOT will be to perform subsystem checkout. The subsystem checkout will include the following tests:

- HGA pointing and control
- RF communication configuration tests
- Solid State Recorder control
- C&DHS and COMMS verification

During the Orbit Acquisition Phase, the main function of the FOT will to be make necessary preparations for Delta–V Mode related activities. When the Spacecraft is in Standby Mode between maneuvers, the FOT will verify successful completion of the previous maneuver and will prepare for the next planned maneuver.

During the Operational Initialization Phase, the FOT uses the Standby Mode as a means to perform subsystem checkout. The subsystem checkout will include the following tests:

- Direct Access System (DAS) startup and checkout
- Capillary Pumped Heat Transport System (CPHTS) startup and checkout

During the Operational Mission Phase, the FOT may use the Standby Mode to perform subsystem checkouts when anomalous conditions occur on–board the Spacecraft. The FOT will monitor Spacecraft health and safety data and will track function parameters in support of trend analyses. Based on these findings, the FOT may decide to command the Spacecraft into the Standby Mode. During such times specific functional tests and reconfigurations will be done.

There is a limited number of failures which would cause the on–board Fault Detection, Isolation, and Recovery (FDIR) functions to yield an autonomous transition into the Standby Mode. Table 50–5 summarizes some of the possible functional failures which can yield an autonomous transition to Standby Mode. When other anomalies which are non–time critical (or types which do not impact resource accommodations for science activities) are detected by the FOT, it may decide to perform investigations or calibrations using the Standby Mode.

TABLE 50–5. STANDBY MODE TRANSITION ELEMENTS

Spacecraft Functional Failure	FDIR Function	Comments
Science Data Formatting, Storage, and Transmission	None to date (area under study)	Reaching capacity limit of SSR could cause transition
Command Reception and Distribution	None, System is configured with hot back–up	Command uplink is required to upload the SCC with commands for SSR and resource management.
High Gain Antenna Pointing	High Gain Antenna Algorithm to turn off pointing if temperature goes outside allowable limits or if errors are too high	Hardware components are contained in the COMS and the SMS.

In the event of an anomaly, the FOT will perform tests to isolate the failure per pre–approved procedures, where possible. Once the anomaly has been effectively isolated, a recovery strategy will be exercised, and the impacted Spacecraft function will be verified to be within specifications. The Spacecraft can then be reconfigured back to the primary mode (Science Mode).

50.2.4 Delta–V Mode

50.2.4.1 Functional Overview

The Delta–V mode is a "propulsive" mode used to either raise altitude from the injection orbit to mission operational altitude, to circularize the mission orbit, or to provide periodic correction to the mission orbit (e.g., drag makeup). The orbital corrections will either be in–plane maneuvers or out–of–plane maneuvers. This mode is used during the Orbit Acquisition, Operational Initialization, and Operational mission phases.

There are three possible sub–mode or sub–level definitions for Delta–V. The constant state variables are the computer (SCC), Delta–V (yes), and Attitude (earth). The state variables that vary are Power Load (off/on) and Science Data (yes/no). This would give four possibilities, except that the combination of Power Load (off) and Science Data (yes) is not applicable. Thus, at a minimum, in Delta–V Mode, the Spacecraft can be at survival power levels and not supporting science, and at a maximum, it can be at full power, capable of providing science. The combinations of state variables which define these sub–modes are as follows: Delta–V level–0 has Load (off) and Science (no), level–1 has Load (on) and Science (no), and level–2 has Load (on) and Science (yes). The particular Delta–V

sub–mode used depends on mission phase and type of maneuver. For all levels of Delta–V Mode the Spacecraft will be required to supply the power for propulsion system initialization, warm–up, and operation. As the mode level is increased, the Spacecraft's functional capability and performance will also increase correspondingly.

Orbit Acquisition Maneuvers: The Spacecraft will perform these maneuvers during the Orbit Acquisition Phase, while in Delta–V mode, level–0. The maneuvers are a combination of out–of–plane inclination corrections and in–plane large delta–V burns. This is the minimum Delta–V mode in terms of Spacecraft capability. Instruments and some high rate data equipment will be in a survival state, and the Spacecraft will be providing only essential services, although the HGA may be available for S–band communication and TONS navigation links.

Orbit Trim Maneuvers: The Spacecraft will perform these maneuvers during the Operational Initialization Phase, nominally while in Delta–V mode level–1. If necessary, the maneuvers could be accomplished while in Delta–V Mode level–0. These maneuvers are a combination of out–of–plane inclination corrections and in–plane altitude adjustment delta–V burns.

Out–of–Plane Mission Orbit Adjust: The Spacecraft will perform inclination correction maneuvers during the Operational Phase while in either Delta–V mode level–1 or level–0, depending on Spacecraft capability. The Spacecraft will reorient to the required out–of–plane maneuver attitude (e.g., 90 degree slew) before performing the delta–V maneuver. Spacecraft systems such as power, thermal, communications will not be operating in the nominal flight attitude and significant performance degradation is possible. Non–essential housekeeping and instrument functions may be powered down if necessary.

In–Plane Mission Orbit Adjust: The Spacecraft will perform drag make–up adjustments to mission altitude or retro–grade altitude corrections during the Operational Phase while in either Delta–V Mode level–2 or level–1, depending on Spacecraft capability. Although instrument science may or may be not supported, all Spacecraft housekeeping functions can remain operational.

50.2.4.2 Entry/Exit

Entry: Entry into the Delta–V Mode will be made by ground command. In the Orbit Acquisition Phase, it will first occur following successful execution of all Orbit Acquisition Initialization Phase activities (i.e., appendage deployments, establishment of

communication and TONS links). Thereafter, in successive mission phases, entry into the Delta–V mode will be ground commanded as necessary.

Exit: Nominal exit from the Delta–V Mode will be made by ground command, following completion of the delta–V maneuver. A loss of the SCC "I'm OK" or detection by the GN&C FDIR of an attitude error beyond a given threshold would cause autonomous entry into Safe Mode and would therefore autonomously abort the maneuver. In the event of a severe power fault while in Delta–V level–2 or level–1, autonomous transition into Delta–V Mode level–0, rather than Survival Mode, will be made. This current operational concept assumes that the TMON load shed does not include turning off thrusters. Also, there will be no autonomous transition from Delta–V level–2 to Standby Mode due to a loss of science data handling capability. In this event, autonomous transition would occur from Delta–V level–2 to Delta–V level–1.

Table 50–6 summarizes criteria for transition to the Delta–V Mode from an initial mode (allowable entry point) and exit from the Delta–V Mode to another mode (allowable exit point).

TABLE 50–6. DELTA–V MODE TRANSITION

Allowable Entry Points	**Initiation**	**Criteria**
Standby Mode	Ground Command	–Successful completion of earth acquisition and attainment of energy balance –Ground Criteria
Science Mode	Ground Command	–Ground Criteria
Allowable Exit Points		
Standby Mode Science Mode Survival Mode Safe Mode	Ground Command	–Ground Criteria
Safe Mode	On–Board Logic (Autonomous)	–Loss of SCC "I'm OK" –GN&C FDIR (attitude error)

50.2.4.3 Minimum Subsystem Requirements

GN&CS: The GN&CS will provide coarse attitude determination and navigation. Coarse earth–oriented pointing will be maintained. For higher Delta–V sub–mode levels, additional capability (e.g., fine attitude control and pointing) may be provided as applicable.

The GN&CS primary navigation functions will be supported via the use of TONS, or as a backup, via uplinked ephemeris, as applicable.

C&DHS: The C&DHS will monitor Spacecraft equipment and instrument telemetry to ensure health and safety. Limited commands will be distributed to instruments and equipment as necessary. Data will be distributed for both S–band transmission and storage on the solid state recorder. The Spacecraft Bus data processing and distribution will be SCC/CTIU based. For higher Delta–V sub–mode levels, additional capability (e.g., high rate data handling and science data handling) may be provided as applicable.

TCS: The TCS will maintain operating temperatures on operating equipment and instruments and survival temperatures for non–operating equipment and instruments. (It is assumed that any out of plane maneuvers to adjust orbit inclination will be performed during the eclipse portion of the orbit. Otherwise, the TCS may not be able to maintain temperatures within allowable limits.) For higher Delta–V sub–mode levels, additional capability may be provided as applicable.

EPS: The EPS will provide necessary power to operating and survival equipment while maintaining a positive energy balance. Essential power for instrument survival and/or science, as applicable, will be provided. The EPS will supply the required electrical power for propulsion system initialization, warm–up and operation. For higher Delta–V sub–mode levels, additional capability (e.g., full power) may be provided as applicable.

COMMS: The COMM subsystem will maintain and reacquire (as necessary) HGA Ku–band and S–band forward and return links with TDRSS and/or GN. It will also maintain and reacquire S–band links through the omnis. The COMM subsystem will provide for the maintenance of the TONS link to support coarse orbit determination via TONS, and it will also support the uplink of backup ephemeris for orbit determination, as applicable. For higher Delta–V sub–mode levels, additional capability (e.g., high rate data link) may be provided as applicable.

PROPS: The Propulsion subsystem will provide impulse for monopropellant delta–V and inclination correction operations to support orbit acquisition and maintenance. The subsystem will also provide impulsive torques for on–orbit three–axis attitude control, three–axis inertial attitude slews, three–axis Earth and sun acquisitions, and reaction wheel unloading.

EAS: The EAS will provide power and data distribution for the Spacecraft via harnessing.

50.2.4.4 Delta–V Mode Operations

The Delta–V Mode is not a contingency or back–up mode. The FOT normally schedules Spacecraft activities well in advance, approximately 28 days before the maneuver date. All Spacecraft delta–V maneuvers will be performed during scheduled TDRSS contacts.

50.2.4.4.1 Orbit Acquisition Phase Delta–V Mode Operations

During the Orbit Acquisition Mission Phase, the FOT will perform the first propulsive maneuvers to place the Spacecraft in the operational altitude. The following is a description of the sequence of tasks the FOT will support/perform to achieve this goal:

- During the Pre–Launch Phase, the FOT will have performed the following with Flight Dynamics Facility (FDF) support:
  - Perform orbit maneuver prediction and orbit maneuver planning
  - Compute and uplink orbit maneuver start time, required Delta–V, estimated stop time, and attitude
  - Compute and uplink yaw attitude slew start and estimated stop times.
- The FOT will notify the Flight Dynamics Facility of their intentions to commence the planned maneuver.
- The FOT will command the Spacecraft SCC to begin executing the appropriate Stored Command Table (SCT) and Relative Time Sequence (RTS) commands for Delta–V activities.
- Upon receipt of ground command to commence delta–V activities, the Spacecraft will reconfigure out of the Standby Mode and into the Delta–V Mode.
- The FOT will verify Spacecraft reconfiguration (per SCT) to the Delta–V Mode Level 0 Configuration. The Spacecraft Power Load is already at a minimum from the previous Standby Mode configuration in which instruments and some housekeeping equipment are powered OFF. The SCC will be in control of Spacecraft activities and will be issuing stored commands from its stored command table (SCT).
- Verify that SCC has commanded power to the propulsion subsystem for initialization and warm–up.
- Verify that the appropriate parameters have been distributed to the propulsion subsystem so that the appropriate algorithm can be

implemented. Verify re–pressurization of tanks has occurred if required.

- Verify rate nulling on all axes.
- Verify that Gyro errors are within specification.
- Verify that filter parameters have converged to specification before the Spacecraft reaches the third apogee.
- Verify that ACS thruster burns achieved the appropriate Spacecraft attitude for Spacecraft boost maneuver.
- Verify that the latch valves are open.
- Verify that engine valves open on command.
- Initialize and verify that apogee burns are starting within 30° to 60° before and ending within 30° to 60° after apogee.
- Command Spacecraft mode transition from Delta–V to Standby Mode.
- Verify the delta–v's for each of the thruster burns.
- Verify coarse earth pointing.
- Verify attitude parameter convergence.
- Verify orbit circularization upon completion of the last thruster burn.
- Verify final orbit altitude (705Km).
- Verify that the latch valves are closed.

50.2.4.4.2 Operational Initialization Phase Delta–V Mode Operations

Spacecraft Delta–V operations will continue into the Operational Initialization Mission Phase. The Delta–V Mode will be used to perform a drag make–up, and orbit adjustments. Fine attitude pointing and orbit correction will be performed in this phase as described below:

- Acquire and verify appropriate navigation and inclination burn data from the Flight Dynamics Facility (e.g., Spacecraft Latitude, Longitude, Pointing, burn magnitudes and direction, etc).
- Uplink inclination burn commands to Spacecraft SCT.
- Initiate and verify Spacecraft inclination burn activities.

  - Verify Spacecraft acceleration vs. time during 90° yaw rotation.
  - Verify Spacecraft acceleration vs. time during inclination burns.
  - Verify Spacecraft acceleration vs. time during –90° yaw rotation.

- Verify that the appropriate Spacecraft inclination (98.2°) has been achieved.
- Command GN&C mode change from Coarse Pointing to Stellar Mode.
- Upload appropriate Telemetry Monitor table parameters.
- Enable Telemetry Monitor monitoring on new table parameters.
- Enable Spacecraft System Operating Mode transition into Standby Mode.
- Command Spacecraft mode transition from Delta–V to another Operational Initialization primary mode (Standby Mode or Science Mode) based on current Delta–V mode level. Nominally, for this phase, the transition will be between Delta–V Mode level–1 and Standby Mode.
- Verify that the appropriate data has been recorded for trend analysis.
- Compute fuel remaining, Spacecraft mass, and center of mass.
- Determine maneuver execution accuracy.
- Determine propulsion system efficiency.

50.2.4.4.3 Operational Phase Delta–V Mode Operations

The Delta–V Mode will be used periodically to perform occasional inclination burns, drag make–up, and momentum unloading during the Operational Mission Phase. The Spacecraft will be configured to Delta–V Mode Level 2, or lower level as required, prior to commencement of inclination or drag make–up maneuvers. Typically the ground commanded transition will occur from Science Mode into the appropriate Delta–V Mode level for the particular maneuver. Delta–V maneuvers may also be ground commanded from any backup mode during the Operational Phase if necessary.

For occasional inclination burns the FOT will support/perform the following tasks:

- The FDF will perform the following:
  - Perform orbit maneuver prediction and orbit maneuver planning
  - Compute orbit maneuver start time, required Delta–V, estimated stop time, and attitude
  - Compute yaw attitude slew start and estimated stop times.
- The FOT will upload SCT commands for the maneuver.
- The FOT will notify the Flight Dynamics Facility of their intentions to commence the planned maneuver.
- The FOT will command the Spacecraft SCC to begin executing the appropriate Stored Command Table (SCT) commands.
- The Spacecraft will autonomously reconfigure out of the Science Mode and into the commanded Delta–V Mode, typically level–1 for this type of maneuver in this phase.
- The FOT will verify Spacecraft reconfiguration (per SCT) to the Delta–V Mode Level 1 Configuration. The Spacecraft Power Load is already on from the previous Mode (Science) configuration. The SCC will be in control of Spacecraft activities and will be issuing stored commands from its stored command table (SCT). Science data will not be supported during the inclination maneuver due to the Spacecraft orientation.
- Verify that SCC has commanded power to the propulsion subsystem for initialization and warm–up.
- Verify GN&C mode change from Stellar Mode to Coarse Pointing Mode.
- Verify that the latch valves are open.
- Verify that engine valves open on command during maneuver.
- Verify that the latch valves close on command during maneuver.
- Initiate and verify Spacecraft inclination burn activities.
  - Verify Spacecraft acceleration vs. time during 90 yaw rotation
  - Verify Spacecraft acceleration vs. time during inclination burns
  - Verify Spacecraft acceleration vs. time during –90° yaw rotation

- Command Spacecraft mode transition from Delta–V to another Operational mode (Survival Mode, Standby Mode, or Science Mode) based on current Delta–V mode level. Nominally, for this type of maneuver, the transition will be between Delta–V Mode level–1 and Standby Mode.
- Verify that the appropriate Spacecraft inclination (98.2°) has been achieved.
- Command GN&C mode change from Coarse Pointing to Stellar Mode.
- Verify that the appropriate data has been recorded for trend analysis.
- Compute fuel remaining, Spacecraft mass, and center of mass.
- Determine maneuver execution accuracy.
- Determine propulsion system efficiency.

Depending on the propulsion burn magnitude and frequency and the associated impact to Spacecraft attitude and pointing performance, science operations may be supported during drag make–up maneuvers. If the drag make–up maneuvers are performed frequently, low magnitude thruster burns can be used which has less impact on pointing performance. Nominally, the Spacecraft will be configured to Delta–V Mode Level 2 [Science data (yes)] from Science Mode for the drag make–up maneuvers, so that science operations will be supported continuously throughout the maneuver. Ground commanded transitions into lower Delta–V levels for these maneuvers will be accommodated as necessary, whether they originate from Science Mode or other backup modes, exclusive of Safe Mode. These maneuvers will be performed per standard operating procedures.

The FOT will perform all Delta–V maneuvers by standard operating procedures. Contingency maneuvers will be performed per contingency procedures (deboost and contingency retrograde orbit), which will be determined at a later date. All maneuvers will be scheduled and approved prior to actual procedure implementation.

50.2.5 Science Mode

50.2.5.1 Functional Overview

The Science Mode is the primary mode used during the Operational Mission phase. During the Operational Initialization Phase, it is one of several primary modes. While in Science Mode, the Spacecraft will provide the full complement of resources necessary to meet

science mission objectives during this mode. These resources include fine attitude control; high–rate data handling, storage and transfer; full electrical power; and thermal control. Science Mode is used for instrument check–out activities during the latter portion of the Operational Initialization Phase because full resources, including high–rate data handling, are required for this activity. (Subsystem check–out activities are handled from Standby Mode in the same mission phase, prior to Instrument check–out.) The combination of state variables are defined for this mode as Power Load (on), Computer (SCC), Delta–V (no), Attitude (earth), and Science Data (yes).

50.2.5.2 Entry/Exit

Entry: Initial entry into the Science Mode will be by ground command from Standby Mode, following successful system/subsystem checkout during the Operational Initialization Phase. Typically, during the Operational Phase, entry into the Science Mode from Delta–V Mode or backup modes will be by ground command following acceptable attitude and environmental conditions, along with the necessary science data processing and communications functions.

Exit: Exit into either the Standby Mode (i.e., for quiescent/checkout operations) or Delta–V Mode will be by ground command. Depending on the type of Spacecraft anomaly, autonomous entry into either the Standby Mode, Survival Mode or Safe Mode is possible. In general a failure which impacts resources required for instrument science will put the Spacecraft into a Standby Mode; a failure which requires significant shedding of both science and housekeeping loads will put the Spacecraft into the Survival Mode; and either a failure which renders either Spacecraft Bus computer (SCC) inoperable or a problem (i.e., attitude error) detected by GN&C FDIR will put the Spacecraft into the Safe Mode. It is also possible to exit into either Survival or Safe Modes by ground command. Ground command will initiate the transition from Operational Initialization Phase to Operational Phase, although the Spacecraft will remain in Science Mode throughout the transition.

Table 50–7 summarizes criteria for transition to the Science Mode from an initial mode (allowable entry point) and exit from the Science Mode to another mode (allowable exit point).

TABLE 50–7. SCIENCE MODE TRANSITION

Allowable Entry Points	Initiation	Criteria
Standby Mode Survival Mode Safe Mode Delta–V Mode	Ground Command	–Science can be supported

TABLE 50–7. SCIENCE MODE TRANSITION (Continued)

Allowable Exit Points		
Standby Mode Survival Mode Safe Mode Delta–V Mode	Ground Command	–Ground Criteria
Standby	On–Board Logic (Autonomous–SCC) Non–Time–Critical High Rate System Fault (TBD)	–HGA FDIR –High Rate System FDIR (TBD)
Safe Mode	On–Board Logic (Autonomous)	–Loss of SCC "I'm OK" –GN&C FDIR (attitude error)
Survival	On–Board Logic (Autonomous–SCC)	–TMON Load Shed Criteria

50.2.5.3 Minimum Subsystem Requirements

GN&CS: The GN&CS will maintain precision earth–oriented pointing. Fine attitude determination and navigation will be provided. The GN&CS primary navigation functions will be supported via the use of TONS. Instrument check–out activities will be supported.

C&DHS: The C&DHS will monitor Spacecraft equipment and instrument telemetry to ensure health and safety. Full commands will be distributed instruments and equipment. Data will be distributed for both Ku–band transmission and storage on the solid state recorders (SSR). The Spacecraft Bus data processing and distribution will be SCC/CTIU based. High–rate data handling will be provided. Ancillary data and time–tagged navigation data will be provided to the instruments. Instrument check–out activities will be supported.

TCS: The TCS will maintain operating temperatures on all housekeeping equipment and instrument–to–Spacecraft interfaces. The CPHTS will be fully operational, providing full heat rejection for ASTER and MOPITT. Instrument check–out activities will be supported.

EPS: The EPS will provide necessary power to operating equipment while maintaining a positive energy balance. Essential power for operational instruments will be provided. Solar array rotation (sun tracking) will be provided. Instrument check–out activities will be supported.

COMMS: The COMM subsystem will maintain and reacquire (as necessary) HGA Ku–band and S–band forward and return links with TDRSS and/or GN. Both high–rate and low–rate S–band links will be supported. The COMM subsystem will provide for the

maintenance of the TONS link to support fine orbit determination via TONS, and it will also support the uplink of backup ephemeris for orbit determination, as applicable. Instrument check–out activities will be supported.

PROPS: The propulsion subsystem will support 1–lb thruster operations to provide impulsive torques for on–orbit three–axis attitude control and reaction wheel unloading. Engine valve heaters will be enabled. Instrument check–out activities will be supported.

EAS: The EAS will provide power and data distribution for the Spacecraft via harnessing. Instrument check–out activities will be supported.

50.2.5.4 Science Mode Operations

In the latter portion of the Operational Initialization Phase, the Science Mode will be used for Instrument check–out activities.

During the Operational Phase, the FOT will perform numerous routine tasks in support of the Science Mode. The routine FOT support tasks include:

- Spacecraft Stored Command Table Management
- Conflict Free Scheduling
- Trend Analyses
- Health & Safety Monitoring
- Real–Time Commanding
- Solid State Recorder Management
- Resource Management
- Planning & Scheduling
- Performance Monitoring and Assessment
- High Rate Data System Management

50.2.6 Survival Mode

50.2.6.1 Functional Overview

The Survival Mode is a minimal power or power critical mode in which only essential Spacecraft functions (e.g., low–rate commanding/telemetry, survival heaters) will be supported. For the End–of–Mission Phase, Survival Mode is a primary mode; in all other

mission phases except Pre–Launch, Survival Mode is a backup mode that is entered upon a power critical situation which requires that non–essential loads be shed. Transition into the survival mode will cause non–essential housekeeping equipment and instruments functions to power–down. The SCC will maintain full control of the Spacecraft while in the Survival Mode. The combination of state variables for this mode is defined as Power Load (off), Computer (SCC), Delta–V (no), Attitude (earth), and Science Data (no).

50.2.6.2 Entry/Exit

Entry: Autonomous transition into the Survival Mode should only occur under an extreme circumstance that puts the Spacecraft in a power critical situation. The autonomous transition is triggered by TMON, based on load shed criteria, including, but not restricted to, the loss of solar array pointing or loss of energy balance (battery DOD exceeds 40%). In general, autonomous transition into this mode will be from higher functional states such as the Science and Standby modes and will only occur for those mission phases where Survival is a backup, not a primary mode. Ground commanded entry into the Survival Mode is possible from any system mode. The Survival Mode may be entered during the transition from Safe Mode back to a higher operating state.

Exit: Exit from the Survival Mode to a higher level or same level mode will be ground commanded. However, autonomous exit from Survival Mode to Safe Mode will be accomplished by on–board logic in the event of either a failure of the SCC or an attitude control error that exceeds FDIR thresholds.

Table 50–8 summarizes criteria for transition to the Survival Mode from an initial mode (allowable entry point) and exit from the Survival Mode to another mode (allowable exit point).

TABLE 50–8. SURVIVAL MODE TRANSITIONS

Allowable Entry Points	Initiation	Criteria
Science Mode Standby Mode Safe Mode Delta–V Mode Launch/Ascent Mode	Ground Command	–Ground criteria
Science Mode Standby Mode Launch/Ascent Mode	On–Board Logic (Autonomous–SCC)	–TMON Load Shed Criteria

TABLE 50–8. SURVIVAL MODE TRANSITIONS (Continued)

Allowable Exit Points		
Safe Mode	On–Board Logic (Autonomous)	–Loss of SCC "I'm OK" –GN&C FDIR (attitude error)
Science Mode Standby Mode Safe Mode Delta–V Launch/Ascent Mode	Ground Command	–Ground criteria

50.2.6.3 Minimum Subsystem Requirements

GN&CS: The GN&CS will provide attitude determination and navigation. Coarse earth–oriented pointing will be maintained and/or (re)acquired as necessary. The GN&CS primary navigation functions will be supported via the use of TONS, or as a backup, via uplinked ephemeris, as applicable.

C&DHS: The C&DHS will monitor Spacecraft equipment and instrument telemetry to ensure health and safety. Commands will be distributed to instruments and equipment. Housekeeping telemetry will be distributed for both S–band transmission and storage on the solid state recorders. The Spacecraft Bus data processing and distribution will be SCC/CTIU based. Stored commands will be distributed to initiate load shedding upon entry to Survival Mode.

TCS: The TCS will maintain operating temperatures on operating housekeeping equipment and survival temperatures for non–operating housekeeping equipment and instruments.

EPS: The EPS will provide necessary power to operating and survival equipment while maintaining a positive energy balance. Essential power for instruments in survival will be provided. Load shedding will be used where necessary. Solar array slew and rotation (sun tracking) will be provided, as available.

COMMS: The maintenance and reacquisition of S–band communications links with TDRSS and/or GN will be supported through the omni antenna. The COMM subsystem will provide for the maintenance of the TONS link to support coarse orbit determination via TONS, and it will also support the uplink of backup ephemeris for orbit determination, as applicable.

PROPS: The propulsion system will survive in a quiescent mode, providing tank pressure and subsystem temperature status telemetry. As necessary, the propulsion subsystem will support 1–lb thruster operations to provide impulsive torques for on–orbit three–axis attitude control and reaction wheel unloading. Engine valve heaters will be enabled.

EAS: The EAS will provide power and data distribution for the Spacecraft via harnessing.

50.2.6.4 Survival Mode Operations

50.2.6.4.1 Survival Mode as Primary Mode

Survival Mode is the primary mode during the End–Of–Mission Phase. Limited direct involvement by the FOT is necessary, assuming nominal conditions.

50.2.6.4.2 Survival Mode as Backup Mode

The Survival Mode is a backup mode in the event of critical power failures during the Launch/Ascent, Orbit Acquisition Initialization, Orbit Acquisition, Operational Initialization and Operational Phases. During these phases, the transition into the Survival Mode will be due to an anomalous power condition. Table 50–9 lists some of the possible functional failures which can yield a transition into Survival Mode.

TABLE 50–9. SURVIVAL MODE TRANSITION ELEMENTS

Spacecraft Functional Failure	FDIR Function	Comments
Power Generation and Regulation Failure	Telemetry Monitor	TMON should monitor Bus voltage, Battery state of charge, Bus load current, Battery V/T level, etc.
Energy Storage Failure	Telemetry Monitor	TMON should act on a Battery Depth of Discharge of greater than 40%
Solar Array Rotation Failure	Solar Array Algorithm	Solar Array Algorithm will do a slew of up to 180°

When an anomalous power condition signals the need to transition to Survival Mode, the on–board Telemetry Monitor will initiate a predefined load shed Spacecraft configuration. The SCC will reconfigure the Electrical Power Subsystem for the Battery Power Conditioner (BPC) to use the maximum charge rate and will reset the battery Voltage–Temperature (V–T) limits.

The FOT will begin performing failure analysis (contingency) procedures to identify and isolate the failure on–board the Spacecraft upon realization that the Spacecraft is in the

Survival Mode. After isolation of the failed component, the FOT will execute a recovery strategy and verify Solar Array auto sun tracking and normal EPS operating conditions (i.e., Bus voltage regulation at 120 Volts ±4%, and proper battery energy management). Successful verification of these functions implies that the EPS is capable of performing its power generation and regulation functions autonomously and that ground initiated exit from Survival Mode may begin. To accomplish this transition properly the FOT will:

- Monitor and verify that the SCC battery state of charge parameter values are correct as compared to the EPS values
- Verify/command the SCC Power Subsystem Monitoring Algorithm to reconfigure to the appropriate V–T curve and support battery charging
- Verify 100% battery state of charge before entering Spacecraft eclipse
- Sequentially power up and initialize the loads which were shed
- Verify energy management and successful load power management
- Command the Spacecraft out of the Survival Mode

Off–line failure analysis will be performed during the execution of these procedures so as to expedite exit from the Survival Mode and support necessary in–depth analyses and tests where applicable.

50.2.7 Safe Mode

50.2.7.1 Functional Overview

The Safe Mode is a state in which the Spacecraft is capable of operating partially or completely independent of the SCC depending on the problem which caused the entry into Safe Mode. Specifically, the Spacecraft will be considered operating in the Safe Mode as long as the attitude control electronics (ACE) performs the attitude control processing functions (i.e., the state variable Computer is either ACE or ACE/SCC). The other constant state variable is Delta–V (no), since it is assumed that no maneuvers will occur while in Safe Mode (although ACS thrusters may be used). The possibility of performing ground commanded maneuvers in Safe Mode is not precluded by design; however, this situation represents a major contingency scenario which is not anticipated.

The state variables which may vary are Load Power (on/off), Attitude (earth/sun) and Science Data (yes/no). After eliminating all possible combinations which are not

applicable, nine sub–modes exist, as summarized in Table IV. The lowest level of these (level–0) is Power Load (off), Computer (ACE), Delta–V (no), Attitude (sun), and Science Data (no). The highest level (level–8) is Power Load (on), Computer (ACE/SCC), Delta–V (no), Attitude (earth) and Science Data (yes). The sub–mode which the Spacecraft will autonomously enter depends upon the fault and the previous Spacecraft mode. Once the Spacecraft is in Safe Mode, autonomous transition from levels with higher functionality to levels with lower functionality can only occur for those levels where the SCC is operational (sublevels 4 through 8). The ACE alone will not contain the necessary FDIR software to initiate the transition. When the SCC is operational, TMON and the GN&C FDIR algorithm will trigger the necessary level transitions within Safe Mode.

The minimum functional state is called "level– 0." The SCC is not functional in this level and only those housekeeping components connected to the Safe Hold Digital Processor (SHDP) within the ACE, such as the attitude control actuators, will utilize ACE processing. The power, thermal, and communications subsystems will operate without ACE support. The next higher level, "level–1", differs only in that ACE attitude control is earth–pointing, rather than sun–pointing. Level–2 has sun pointing and a full power load. Level–3 has earth pointing and a full power load. Level–4 is similar to level–0 (i.e., shed load and sun pointing); however, there is now partial SCC control. Level–5 differs from level–4 in that attitude control is earth oriented. Level–6 has partial SCC control, a full power load, and sun pointing. Level–7 has partial SCC control, a full power load, and earth pointing. Level–8, the highest level of Safe Mode, has the same configuration as level–7, but with the capability to support science operations.

The performance requirements discussed in Section 50.2.7.3 address the level–0 state. As the level is increased, the Spacecraft's functional capability and performance will also increase correspondingly.

The Safe Mode is a back–up mode that may be used during the Orbit Acquisition Initialization, Orbit Acquisition, Operational Initialization, Operational, and End–of–Mission phases.

50.2.7.2 Entry/Exit

Entry: Autonomous entry into Safe Mode can only occur under two circumstances. The first is the loss of the SCC "I'm OK" signal and the second is the detection by GN&C FDIR of attitude control parameters which are not within limits.

Autonomous Spacecraft entrance into the Safe Mode due to the first circumstance will only occur if the CTIU and/or the ACE senses the loss of "I'm OK" signal from the SCC during two

consecutive major cycles. The SCC operation is monitored by the Software FDIR, and upon failure of any one of the following checks, it withholds the SCC "I'm OK": (1) Memory Check, (2) Execution Time Check, and (3) Command Path Test. In addition, the SCC "I'm OK" will be withheld in the event that the SCC crashes, which might occur if: (1) a software fault causes an SCC to go down, (2) an unforeseen system fault causes an SCC to go down, (3) an operations error places the Spacecraft in a state that the SCCs cannot control, or (4) an SCC I/O service failure occurs. Even if the SCC has not failed, transition to Safe Mode will occur due to a failure of other C&DHS equipment (e.g., the CTIU) or the ACE in such a manner that the SCC "I'm OK" delivery to the ACE is inhibited. When entry into Safe Mode has occurred due to loss of the SCC "I'm OK", certain sub–levels of Safe Mode then become inaccessible upon further failure. In this case, unless there was already a shed load power condition (e.g., previous mode was Survival), it is not possible to enter subsequent Safe Mode levels involving a shed load, because the necessary TMON functions reside in the SCC, which is no longer functional. Similar restrictions apply to the transition, within Safe Mode, from earth–pointing to sun–pointing. Without SCC functionality, autonomous entrance into subsequent levels involving sun–pointing is impossible because the necessary TMON functions are unavailable. These restrictions based on SCC operability do not preclude ground commanded transition to any level.

Autonomous entrance into Safe Mode due to the second circumstance will occur if the SCC switches attitude control to the ACE because the GN&C FDIR detects an attitude error beyond a given threshold. The SCC would switch attitude control to the ACE via a BDU command message if (1) either earth sensor reports a loss of the earth, or (2) the difference between the two earth sensor signals exceeds an allowable limit. The thresholds which initiate autonomous transitions will vary according to system mode, since different modes have different minimum requirements with respect to attitude control. Depending on the reason for the attitude error, the ACE will switch to either backup earth pointing or to sun pointing. The SCC will continue to perform all other functions, excluding attitude control, as it did prior to the transition. As long as the SCC remains functional, TMON will be capable of initiating, as necessary, further autonomous transitions (e.g., earth–pointing to sun–pointing or full power load to shed power load) within Safe Mode. The details of the GN&C FDIR algorithm which causes entry into Safe Mode and the thresholds which trigger it will depend on which mission phase the Spacecraft is in and/or the previous system mode in which the Spacecraft was prior to the transition to Safe Mode.

The Spacecraft can be ground commanded into Safe Mode during all post–separation mission phases.

Exit: Exit from the Safe Mode into another mode is made by ground command following verification that the SCC is functional and capable of controlling the Spacecraft and/or that the ACE is no longer needed for attitude control. The specific higher level mode (nominally either Survival, Standby, or Science Mode) into which the Spacecraft is commanded will depend not only on ground decision and full SCC functionality but also on the functionality of other Spacecraft resources. In other words, Spacecraft functionality at the time of the transition depends on which Safe Mode level is currently in effect. In the case of a Safe Mode with a load shed, exit can occur to Survival by ground command with the load still shed, given that all other of the above conditions are met (full SCC, no ACE).

Table 50–10 summarizes criteria for transition to the Safe Mode from an initial mode (allowable entry point) and exit from the Safe Mode to another mode (allowable exit point).

TABLE 50–10. SAFE MODE (LEVEL 0)

Allowable Entry Points	Initiation	Criteria
Any Mode	Ground Command	–Ground criteria
Science Mode Standby Mode Delta–V Mode Survival Mode Launch/Ascent Mode	On–Board Logic	–Loss of SCC "I'm OK" or –GN&C FDIR (attitude error)
Allowable Exit Points		
Survival Mode Standby Mode Science Mode	Ground Command	–Ground criteria

50.2.7.3 Minimum Subsystem Requirements

GN&CS: The GN&CS will provide coarse earth–oriented or sun–oriented pointing, which will be maintained and/or reacquired from an unknown attitude as necessary. The ACE will provide attitude control processing. The GN&CS will be capable of performing these minimum functions without SCC software support.

C&DHS: The C&DHS will provide a mode entry indication to each instrument. The C&DHS will allow ground monitoring of Spacecraft equipment to ensure health and safety. Ground commanding will be accommodated. Data will be distributed for both S–band transmission and storage on the solid state recorders. The C&DHS will provide command & telemetry services to all instruments and subsystems, although ground commanded reconfiguration may be required to reestablish this capability after certain failures.

TCS: The TCS will maintain operating temperatures on operating housekeeping equipment and instruments, and survival temperatures for non–operating housekeeping

equipment and instruments. The TCS will be capable of performing these necessary minimum functions without SCC software or ACE support. At higher levels, the TCS will provide heat rejection for the instruments using CPHTS.

EPS: The EPS will provide necessary power to operating and survival equipment while maintaining a positive energy balance. Essential power for instruments in survival will be provided. Load shedding will be used where necessary to transition from higher Safe Mode levels to lower levels. Solar array slew and rotation (sun tracking) will be provided. The EPS will support reacquisition of the solar array sun pointing from an arbitrary orientation of the solar array. The EPS will be capable of performing these minimum functions without SCC software or ACE support.

COMMS: The maintenance and reacquisition of low–rate S–band communications links through the omni antenna with TDRSS and/or GN will be supported. When the SCC is non–operational, the TONS link will not be supported. The COMS will be capable of performing these minimum functions without SCC software or ACE support.

PROPS: The Propulsion subsystem will provide impulsive torques for on–orbit three–axis attitude control, three–axis inertial attitude slews, three–axis Earth and sun acquisitions, and reaction wheel unloading. Engine valve heaters will be enabled. The propulsion system will provide tank pressure and subsystem temperature status telemetry. The PROPS will be capable of performing these minimum functions without SCC software or ACE support.

EAS: The EAS will provide power and data distribution for the Spacecraft via harnessing.

50.2.7.4 Safe Mode Operations

Table 50–11 lists some of the possible functional failures which can yield a transition into Safe Mode. These failures, among others, will yield a transition to one of nine Safe Mode levels. The FOT has the task of supporting Spacecraft functions, resolving the anomaly, and getting the Spacecraft out of Safe Mode. The Spacecraft state variables governing the Spacecraft modes and Safe Mode levels are prioritized:

- Attitude:
  Of primary importance, the FOT will perform tasks to get the Spacecraft in an earth pointing attitude.
- Computer:
  The FOT will get the redundant (or primary) SCC on–line in order to facilitate operations, make use of SCC functions, and have sufficient support to perform Delta–V maneuvers if necessary.

- Power Load:
  The FOT will verify Power Subsystem functionality and accommodate power to the loads which were shed.
- Science Data:
  The FOT will configure the Spacecraft to provide all of the resources required to support full science data formatting, storage, and transmission.

TABLE 50–11. SAFE MODE TRANSITION ELEMENTS

Spacecraft Functional Failure	FDIR Function	Comments
Software Execution and Hardware I/O Services	Software Algorithm, and Hardware "I'm OK" inhibit	SCC anomaly, SCC I/O control anomaly
Attitude Determination and Control	GN&C Algorithm	Attitude error, based on mode dependent thresholds

50.2.8 Instrument Accommodation

This section describes the resources and commands provided to Instruments in each Spacecraft system mode. Instrument operating modes are described in general terms in order to describe how Instrument operation modes correspond to the various Spacecraft system modes.

50.2.8.1 Instrument Operating Modes

In general, Instruments will have three different types of operating modes – operational mode, survival mode, and safe mode. These three modes are explained below:

a. The Instrument operational mode will be used during the Spacecraft Science mode, when the Spacecraft and Instruments are performing all of the functions to fulfill the science mission. The Instrument operational mode may be comprised of several operational states (e.g., imaging, standby, calibration, etc.) which together comprise its full scope of science operations.

b. The Instrument survival mode is a non–operational state in which only survival equipment is powered. Survival mode is the Instrument's minimal power consumption state. It is recommended that the Instrument reconfigure itself when it transitions to survival mode so that it will be insensitive to possibly high incident energy levels in the event that the Spacecraft assumes some non–nominal attitude. Such reconfiguration might include actions such as shutting aperture doors and covers or rotating apertures into the instrument assembly for protection.

c. The Instrument safe mode is an operational state in which the Instrument is configured to be insensitive to non–nominal Spacecraft attitudes (as described in b above) and to survive a sudden loss of power without damage. Although

Instrument safe mode is essentially a non-science mode, the Instrument may elect to continue operation of certain components (e.g., Stirling cycle coolers) in order to minimize the time required to resume science operation once the Spacecraft transitions out of Safe Mode. However, continued power to operate these components cannot be guaranteed in the event that the Spacecraft must transition to a lower level of Safe Mode.

50.2.8.2 Instrument Mode Transitions

Instrument mode transitions will typically be accomplished by executing a series of RTS commands. The command sequence may be sent by ground command, and, in certain predefined contingency situations, the Spacecraft FDIR system will autonomously send commands to switch the Instrument modes.

Three autonomous methods are available to switch the instruments to the Instrument safe mode:

- When the GN&C FDIR detects the existence of a Spacecraft attitude condition that meets the criteria to enter Spacecraft Safe Mode, the SCC will send an affirmative "goto safe mode" command to the Instruments.
- When the CTIU detects the loss of the SCC "I'm OK" signal for two consecutive major cycles, it will automatically send an affirmative "goto safe mode" command to the Instruments.
- The Instruments will control their own transition to safe mode when they detect the loss of the SCC "I'm OK" signal for five consecutive major cycles.

Since the SCC retains control of the Spacecraft during Spacecraft Survival Mode, the only autonomous method to transition Instruments to survival mode is for the SCC to send an affirmative "goto survival mode" command.

In Spacecraft Survival Mode and in the levels of Safe Mode which require load shed, the SCC will send commands to switch the power relays that distribute power within the Instrument, thereby shedding all Instruments loads except survival equipment.

Instruments are required to complete the transition to safe mode or survival mode within 30 seconds of receiving the appropriate command or detecting the loss of the SCC "I'm OK" signal. The Spacecraft will wait for at least 30 seconds after sending these commands before shedding instrument power loads or proceeding with safe mode attitude maneuvers.

50.2.8.3 Correspondence Between Instrument and Spacecraft Operating Modes

Table 50–12 maps Instrument operating modes into Spacecraft operating modes.

TABLE 50–12. INSTRUMENT OPERATING MODES MAPPED INTO SPACECRAFT OPERATING MODES

Instrument Operating Modes	Spacecraft Operating Modes						
	Ground Test Mode	Launch/ Ascent Mode	Standby Mode	Science Mode	Delta–V Mode	Survival Mode	Safe Mode
Operational Mode			X[1]	X	X[2]		X[2]
Survival Mode	X	X	X		X	X	X[3]
Safe Mode							X

[1] – Science data transmission is not supported in Spacecraft Standby Mode, but the Spacecraft maintains an earth–oriented attitude and provides the power and thermal resources for safe Instrument operation.
[2] – In the highest levels of Delta–V Mode (level 2) and Safe Mode (level 8), the Spacecraft provides the resources for Instrument operation, but fine pointing control is not supported.
[3] – In certain levels of Spacecraft Safe Mode, non–essential power loads are shed. This table assumes that the Instrument survival mode configuration is identical to its safe mode configuration after the Spacecraft has commanded its power switches to shed all loads except survival equipment.

Instruments will be in their operational mode when the Spacecraft is capable of maintaining an earth–oriented attitude and of supplying the minimum power and thermal resources to support safe Instrument operation. The Spacecraft operating modes which meet these criteria for Instrument operational mode are Science Mode, Standby Mode, and the highest levels of Delta–V Mode (level 2) and Safe Mode (level 8). Except for Science Mode, these Spacecraft operating modes will probably not allow useful science data generation to continue. Science data transmission is not supported during Spacecraft Standby Mode. In Delta–V Mode and Safe Mode, the Spacecraft does not support fine pointing control, so that Instrument observation data may not meet the resolution required for science objectives. Also, if Instruments have reconfigured to be insensitive to plume contamination or non–nominal Spacecraft attitudes on entering Delta–V or Safe Mode, science data collection may not be possible.

Instrument survival mode is the nominal operating mode during all phases from Prelaunch until the Spacecraft housekeeping subsystems have been checked out in the Operational Initialization Phase; therefore, it is the only Instrument mode during Spacecraft Ground Test and Launch/Ascent Modes. This mode is also the nominal Instrument operating mode whenever the Spacecraft is in Survival Mode or when load shedding occurs in a lower level of Spacecraft Safe or Delta–V Modes.

Instrument safe mode will only occur when the Spacecraft is in Safe Mode.

50.2.8.4 Resources Provided to Instruments in Each Spacecraft Operating Mode

Table 50–13 summarizes the status of Instruments and the resources provided to Instruments in each Spacecraft operating mode.

In all on–orbit modes in which the SCC is operating, the Spacecraft FDIR system, including TMON, is available to monitor certain Instrument health and safety telemetry and to switch Instrument hardware as required for Instrument safety. (FDIR may be disabled by ground command.) The number of Instrument parameters to be monitored by TMON will be limited and will be defined in the C&DH Interface Control Document (ICD) for each Instrument. Generally, the telemetry monitored by TMON should be time–critical parameters which, if they exceed of a predefined range, would require an autonomous response to ensure Instrument safety.

50.2.8.4.1 Ground Test Mode

The FOT will monitor Instrument telemetry to verify health and safety status. Instruments will be in their survival mode with only survival heaters enabled. The Spacecraft TCS will maintain all instrument interfaces within survival temperature limits.

50.2.8.4.2 Launch/Ascent Mode

Instruments will be in their survival mode with only survival heaters enabled. The Spacecraft TCS will maintain all instrument interfaces within survival temperature limits.

During the Launch/Ascent mission phase, the FOT will monitor Instrument telemetry as it is received via the launch vehicle communication link to verify health and safety status. After the Spacecraft separates from the launch vehicle, Instrument telemetry will be transmitted to the ground via the Spacecraft S–band communication link. Once separation from the launch vehicle occurs, TMON will monitor certain Instrument health and safety telemetry as defined in the C&DH ICD, and the FDIR system will be capable of autonomously switching Spacecraft and Instrument hardware to protect against time critical failures.

50.2.8.4.3 Standby Mode

In Standby Mode during the Orbit Acquisition Initialization and Orbit Acquisition Phases, Instruments will be in their survival mode with survival heaters enabled. The Spacecraft TCS will maintain all Instrument interfaces within survival temperature ranges.

In Standby Mode during the Operational Initialization and Operational Phases, Instruments will be in their operational mode, with the Spacecraft supplying full power and thermal resources. Science data handling capability (collection, distribution, or transmission) will not be provided.

TABLE 50–13. RESOURCES PROVIDED TO THE INSTRUMENTS IN EACH SPACECRAFT OPERATING MODE

Spacecraft Mode	Instrument Status	Resources Provided to Instruments
Ground Test Mode	• Only survival equipment is powered ON • Survival heaters enabled • Configured as for survival mode	• Ground monitors instrument health and safety telemetry via T–0 umbilical or Launch Vehicle communications link • All instrument interfaces maintained within no operating temperature limits
Launch/Ascent Mode	• Only survival equipment is powered ON • Survival heaters enabled • Configured as for survival mode	• Ground monitors instrument health and safety telemetry via Launch Vehicle communications link • All instrument interfaces maintained within no operating temperature limits
Standby Mode	• Only survival equipment during OAI Phase; otherwise, full power levels • Configured as for survival mode during OAI; otherwise configured as for operational mode • Survival heaters enabled	• Instrument health and safety telemetry relayed to ground; TMON monitors Instrument telemetry as specified in the C&DH ICD • All instrument interfaces maintained within operating temperature limits
Science Mode	• Powered ON • Configured as for operational mode • Survival heaters enabled	• Instrument health and safety telemetry relayed to ground; TMON monitors Instrument telemetry as specified in the C&DH ICD • Science data handling capability will be provided • All instrument interfaces maintained within operating temperature limits
Survival Mode	• Only survival equipment is powered ON • Survival heaters enabled • Configured to withstand incident energy due to non–nominal Spacecraft attitude	• Affirmative "goto Survival Mode" command will be sent to instruments to signal entrance to Survival Mode • Instrument health and safety telemetry relayed to ground; TMON monitors Instrument telemetry as specified in the C&DH ICD • All instrument interfaces maintained within non–operating temperature limits

TABLE 50–13. RESOURCES PROVIDED TO THE INSTRUMENTS IN EACH SPACECRAFT OPERATING MODE (CONTINUED)

Spacecraft Mode	Instrument Status	Resources Provided to Instruments
Delta–V Mode Level 0	• Only survival equipment is powered ON • Survival heaters enabled • Configured to withstand incident energy due to non–nominal Spacecraft attitude	• Affirmative "goto Survival Mode" command may be sent to instruments to enter Delta–V level 0 mode • Instrument health and safety telemetry relayed to ground; TMON monitors Instrument telemetry as specified in the C&DH ICD • All instrument interfaces maintained within non–operating temperature limits
Level 1	• Full power levels • Survival heaters enabled • May be configured for either operational or survival mode	• Instrument health and safety telemetry relayed to ground; TMON monitors Instrument telemetry as specified in the C&DH ICD • All instrument interfaces maintained within operating temperature limits
Level 2	• Full power levels • Configured as for operational mode • Survival heaters enabled	• Instrument health and safety telemetry relayed to ground; TMON monitors Instrument telemetry as specified in the C&DH ICD • Science data handling capability will be provided • All instrument interfaces maintained within operating temperature limits
Safe Mode I. SCC Failure (Levels 0,1,2,&3)	• Configured to survive sudden loss of power; it may be the case that only survival equip is powered[1] • Survival heaters enabled • Configured to withstand incident energy due to non–nominal Spacecraft attitude	• All instrument interfaces maintained within non–operating temperature limits • Affirmative "goto Safe Mode" command sent to instruments on entrance to this mode. • SCC "I'm OK" signal ceases.

TABLE 50–13. RESOURCES PROVIDED TO THE INSTRUMENTS IN EACH SPACECRAFT OPERATING MODE (CONTINUED)

Spacecraft Mode	Instrument Status	Resources Provided to Instruments
Safe Mode (Continued) II. GN&C FDIR Triggers Earth Pointing Safe Mode (Levels 5 and 7) (Level 8)	• Configured to survive sudden loss of power; it may be the case that only survival equip is powered[2] • Survival heaters enabled • Configured to withstand incident energy in non–nominal S/C attitude	• All instrument interfaces maintained within non–operating temperature limits • Affirmative "goto Safe Mode" command sent to instruments on entrance to this mode • SCC "I'm OK" signal continues to be sent.
	• May be configured for either safe mode or operational mode • Full Power levels[2] • Survival heaters enabled	• Full power resources are available to the Instruments • Affirmative "goto Safe Mode" command sent to instruments on entrance to this mode. Ground commands may be sent to transition the Instrument back to operational mode. • SCC "I'm OK" signal will continue to be sent. • Low fidelity pointing control is maintained. • Science data handling capability will be provided • All instrument interfaces maintained within operating temperature limits
III. GN&C FDIR Triggers Sun Pointing Safe Mode (Levels 4 & 6)	• Configured to survive sudden loss of power; it may be the case that only survival equip is powered[2] • Survival heaters enabled • Configured to withstand incident energy in non–nominal S/C attitude	• All instrument interfaces maintained within non–operating temperature limits • Affirmative "goto Safe Mode" command sent to instruments on entrance to this mode • SCC "I'm OK" signal continues to be sent.

[1] When the Spacecraft enters Safe Mode, the Instrument's power switches remain in the same position as in the previous mode. When the SCC is failed, no autonomous load shedding can occur.

[2] When the Spacecraft enters Safe Mode, the Instrument's power switches remain in the same position as in the previous mode. In levels of Safe Mode in which the SCC remains operational, autonomous load shedding may occur as required.

At all times in Standby Mode, Instrument health and safety telemetry will be transmitted via the Spacecraft S–band communications link. As defined in the C&DH ICD, the Spacecraft FDIR system, including TMON, will monitor certain Instrument health and safety telemetry and will switch Instrument hardware as required for Instrument safety.

There is currently no plan to notify Instruments of transition to Standby Mode by sending a command via the normal command path. Instruments will be transitioned from survival to operational modes via ground command.

50.2.8.4.4 Delta–V Mode

There are three levels of Delta–V Mode. During all Delta–V Mode sublevels, Instrument health and safety telemetry will be transmitted via the Spacecraft S–band communications link. As defined in the C&DH ICD, the Spacecraft FDIR system, including TMON, will monitor certain Instrument health and safety telemetry and will switch Instrument hardware as required for Instrument safety. The Spacecraft will enter Delta–V Mode by ground command, and Instruments may receive "goto Survival Mode" or "goto Safe Mode" command sequences as described in sections 50.2.8.4.6 and 50.2.8.4.7, respectively.

During Delta–V level–0, Instruments are in their survival mode, being powered off with covers shut and survival heaters enabled. The Spacecraft TCS will maintain all instrument interfaces within survival temperature limits. This is the nominal mode for the orbit acquisition burns and a contingency mode at other times.

During Delta–V level–1, Instruments are in their operational mode but the Spacecraft will not transmit any science data. This is the nominal mode for orbit adjust maneuvers. Instruments may reconfigure to close aperture doors or to rotate their apertures in order to protect against contamination. The Spacecraft will provide full power and thermal resources.

During Delta–V level–2, Instruments are in their operational mode, and the Spacecraft will continue to transmit any science data which is generated. (The usefulness of the data will depend on the Instrument's sensitivity to pointing disturbances.) Instruments may reconfigure to close aperture doors or to rotate their apertures in order to protect against contamination. The Spacecraft will provide full power and thermal resources. This sublevel of Delta–V may be used during short, in–plane maneuvers.

50.2.8.4.5 Science Mode

Entry into Science Mode will be via ground command. Instruments will be configured appropriately as part of normal ground command uploads. Full power, data, and thermal

resources will be supplied to Instruments as required for science data generation or calibration, as applicable. Instrument health and safety telemetry will be transmitted via the Spacecraft S–band communications link. As defined in the C&DH ICD, the Spacecraft FDIR system, including TMON, will monitor certain Instrument health and safety telemetry and will switch Instrument hardware as required for Instrument safety. Science data handling capability (collection, distribution, or transmission) will be provided. Spacecraft ancillary data will be provided to all Instruments. Instruments will receive an "I'm OK" signal from the SCC once every major cycle while in Science Mode. Instrument aperture covers will remain open, unless already closed for other reasons.

50.2.8.4.6 Survival Mode

Instruments will receive a command sequence, via the normal command path, to go to their survival mode. Instruments are expected to shut down so that only survival equipment remains operational. It is also recommended that instruments close aperture doors and covers or otherwise reconfigure in order (a) to protect themselves in the event that Safe Mode (possibly sun–pointing) is entered from Survival Mode, and (b) to minimize heater power consumption by reducing heat loss through aperture openings.

Instrument health and safety telemetry will be transmitted via the Spacecraft S–band communications link. As defined in the C&DH ICD, the Spacecraft FDIR system, including TMON, will monitor certain Instrument health and safety telemetry and will switch Instrument hardware as required for Instrument safety. The Spacecraft TCS will maintain all instrument interfaces within survival temperature limits.

50.2.8.4.7 Safe Mode

Resources available to Instruments will depend on the Spacecraft Bus capability, which is reflected by the Safe Mode sublevel in effect. The nature of the anomaly and the actions of the FDIR system will determine the sublevel of Safe Mode. From a housekeeping perspective, there are several possible safe mode configurations depending upon the attitude, the status of the SCC, and the status of the power load. These configurations are denoted levels 0 – 8.

One "goto Safe Mode" command will be sent to the Instruments, regardless of the sublevel of Safe Mode which the Spacecraft enters. As an additional precaution, Instruments are required to monitor the SCC "I'm OK" signal and autonomously reconfigure for Safe Mode whenever this signal is missed for five consecutive major cycles. During Safe Mode sublevels 4 through 8, the Instrument will continue to receive the SCC "I'm OK" signal despite having received the "goto Safe Mode" command.

Because neither the "goto Safe Mode" command nor the timeout of the SCC "I'm OK" signal will convey any information about the sublevel of Safe Mode to be entered, it is recommended that the Instruments assume the same configuration for either indication. The Instrument safe mode configuration must have survival heaters enabled and must have components configured such that no damage will occur if operational power is pulled abruptly. (Survival equipment will continue to be powered in the event that non–essential Instrument loads are shed.) It is recommended that the Instruments reconfigure to protect themselves against the possibility that the Spacecraft will assume a sun–pointing or non–nominal attitude. This type of reconfiguration that protects sensors also helps to minimize Instrument heater power consumption.

The sequence of events leading to Safe Mode will vary depending on the nature of the anomaly:

- **SCC Failure:** If the SCC fails, then the ACE assumes responsibility for maintaining an earth–pointing Spacecraft attitude. Sensing the timeout of the SCC "I'm OK" signal, the CTIU will send an affirmative "goto Safe Mode" command to the Instruments. The Instruments will no longer receive the SCC "I'm OK" signal. Without an operational SCC, further autonomous Spacecraft reconfiguration is not possible, so that ground commands are necessary to shed non–essential power loads or to transition to a sun pointing Spacecraft attitude. Unless ground commands are executed, Spacecraft attitude and the power and thermal resources provided to the Instruments will remain the same as before the SCC failure. (This sequence describes Safe Mode levels 0, 1, 2, and 3.)
- **GN&C FDIR triggers Earth Pointing Safe Mode:** If the GN&C FDIR triggers an earth pointing Safe Mode, the SCC will send a relative time sequence (RTS) to the Instrument which includes an affirmative "goto Safe Mode" command. The SCC "I'm OK" signal will continue to go to the Instruments because the SCC is still operating. (This sequence describes Safe Mode levels 5, 7, and 8.)
- **GN&C FDIR Triggers Sun Pointing Safe Mode:** If the GN&C FDIR triggers a sun–pointing Safe Mode, then the SCC sends an RTS to the Instrument which includes an affirmative "goto Safe Mode" command. This RTS would also command the ACE to sun pointing mode with the appropriate housekeeping equipment reconfigurations, and it may include a delay sufficient for Instrument reconfiguration. The SCC "I'm OK" signal continues to go to the Instrument because the SCC is still operating. (This sequence describes Safe Mode levels 4 and 6.)

In all levels of Safe Mode, Instrument health and safety telemetry will be relayed to the ground for direct ground monitoring. Instruments will accept commands as available from the ground through the CTIU and/or from on–board software via the C&DHS (SCC). Because the SCC may be inoperational during Safe Mode, TMON and the Spacecraft FDIR system may not be available to monitor Instrument time–critical health and safety telemetry.

Instrument survival equipment will be powered in all levels of Safe Mode. Although Instruments may choose to continue to operate components other than survival equipment in their safe mode configuration, the Spacecraft may abruptly cut off power to non–survival equipment. Due to potentially hazardous environments (e.g., Spacecraft sun–pointing attitude), Instrument health cannot be guaranteed if it has not reconfigured to protect its apertures.

At the highest level of Safe Mode (level–8), Instruments will be supplied full thermal and power resources. In addition to transmitting Instrument health and safety telemetry via the S–band communication link, TMON will be available to monitor Instrument telemetry as defined in the C&T ICD. Science data handling capability (collection, distribution, or transmission) will be provided. If Safe Mode is entered autonomously, the Instruments will have reconfigured to protect their apertures and will have gone to safe mode power levels. In this event, Instruments may be ground commanded to resume their operational mode when the Spacecraft is in this highest level of Safe Mode.