3724

CONTRACT NAS5-32500

Earth Observing System

EOS–AM SPACECRAFT PDR DATA PACKAGE

Package 5

Volume II of II

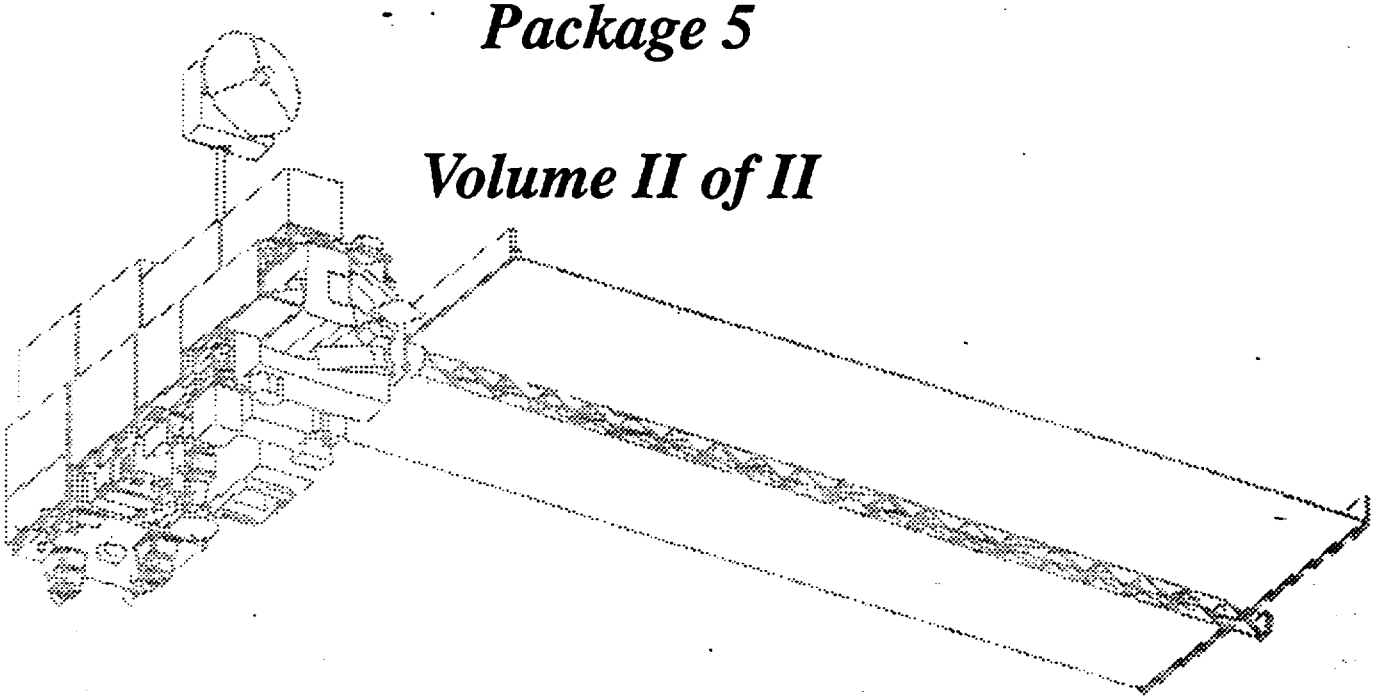

30 August 1993

EOS

(Preliminary)
Instrument Flight Operations Understanding Advanced Spaceborne Thermal Emission and Reflection Radiometer (ASTER) for EOS–AM Spacecraft (OPD–104)

20043117
CAGE No. 49671
26 August 1993

(PRELIMINARY)

EOS-AM Spacecraft

ADVANCED SPACEBORNE THERMAL EMISSION and REFLECTION RADIOMETER (ASTER)

INSTRUMENT FLIGHT OPERATIONS UNDERSTANDING

Prepared Under:
Contract No. NAS5-32500
NASA Goddard Space Flight Center
Greenbelt, Maryland 20771

Prepared by:
Martin Marietta
Astro-Space
P. O. Box 800
Princeton, New Jersey 08543-0800

REVISION LOG

This log identifies those portions of this document which have been revised since original issue.

Revision	Paragraph Number(s) Affected	Rev. Date	Approval
Initial Draft	All	24 May 1993	N/A
Preliminary	All	26 August 1993	N/A

TABLE OF CONTENTS

SECTION/ PARAGRAPH	TITLE	PAGE
1	INTRODUCTION	1
1.1	Purpose	1
1.2	Scope	1
2	DOCUMENTATION	2
2.1	Applicable Documents	2
2.2	Information Documents	2
3	INSTRUMENT DEFINITION	4
3.1	Basic Description	4
3.2	Instrument Operations	5
3.2.1	Operating Modes	7
3.2.2	Microprocessor Operation	10
3.2.3	Instrument Commands	10
3.2.4	Instrument Telemetry	10
3.2.4.1	Science Data	10
3.2.4.2	Engineering Data	10
3.2.4.3	Housekeeping Data	10
3.2.5	Bus Data Unit	11
3.2.6	Operating Constraints	11
3.2.6.1	Categories of Constraint/Restraints	11
3.2.6.2	ASTER Operating Constraints	12
3.2.7	Initial Activation	14
3.2.8	Initial Instrument Operation	14
4	OPERATIONAL SYSTEM DEFINITION	15
4.1	Spacecraft Bus	15
4.1.1	Command and Telemetry Systems	17
4.1.2	Spacecraft Controls Computer	19
4.1.2.1	Spacecraft Controls Computer Description	19
4.1.2.2	Spacecraft Controls Computer Operation	22
4.1.3	Command and Telemetry Interface Unit	26
4.1.4	Science Formatting Equipment	30
4.1.5	Solid State Recorder	33
4.1.6	Bus Data Unit	40
4.1.7	Initial Spacecraft Operation	40
4.1.8	Spacecraft Maneuver Operations	41
4.1.9	Autonomous Operations	42
4.1.10	Spacecraft Bus Operating Modes	42
4.1.11	Spacecraft Bus - Instrument Operating Modes Relationships	48

TABLE OF CONTENTS (continued)

SECTION/ PARAGRAPH	TITLE	PAGE
4.2	Ground System	50
4.2.1	Space Network	50
4.2.2	FDF	52
4.2.3	NASCOM	53
4.2.4	Science Support Networks	53
4.2.5	Alternate Space/Ground Links	54
4.2.6	EOSDIS	54
4.2.6.1	EDOS	54
4.2.6.2	ECOM	55
4.2.6.3	ECS	56
4.2.6.3.1	FOS	56
4.2.6.3.2	SDPS	57
4.2.6.3.3	CSMS	58
4.2.7	Japanese Elements of the ASTER Ground System	59
4.2.7.1	ASTER Ground Data System Overview	59
4.2.7.2	Japanese Elements of the ASTER Ground System Description	61
5	FUNCTIONAL RESPONSIBILITY ALLOCATIONS	63
5.1	Planning and Scheduling	63
5.1.1	Long Term Planning	63
5.1.2	Initial Scheduling	64
5.1.3	Daily Planning and Scheduling	65
5.1.4	Planning Aids	66
5.2	Uplink Generation	66
5.3	Real-Time Operations	68
5.4	Performance Verification	69
5.5	Database and Software Maintenance	70
5.6	Early Orbit Operations	70
5.6.1	Launch - Orbit Acquisition Mission Phases	71
5.6.2	Activation	75
5.6.3	Transition to Orbital Operations	76
5.7	Spacecraft Maneuvers	76
5.8	Special Observations	77
5.9	Contingencies	78
6	INTERFACE EXCHANGE ITEMS	80
6.1	Planning and Scheduling	80
6.2	Command Generation	81
6.3	Real Time Operations	81
6.4	Analysis	81
6.5	Operations Database	82
6.6	Other Interface Exchange Items	82

TABLE OF CONTENTS (continued)

SECTION/ PARAGRAPH	TITLE	PAGE
7	JOINT OPERATING PROCEDURES	83
7.1	ICC/EOC FOT Interface	83
7.1.1	Daily Operations Planning	83
7.1.2	Command Generation	84
7.1.3	Special Operations	84
7.1.4	EOC Database	84
7.1.5	Microprocessor Load Verification	84
7.2	ICC/EOC Command Management Interface	85
7.2.1	Operations Plans	85
7.2.2	Planning Aids	85
7.2.3	Command Generation	85
7.2.4	Performance Feedback	85
7.3	ICC/FOT Interface	85
7.3.1	Real Time Operations	86
7.3.2	Special Operations	86
7.3.3	Initial Operations	86
7.3.4	Performance Verification	86
7.5	ICC/TL Access to Telemetry	86
8	IMPLEMENTATION AGREEMENTS	88
8.1	Flight Operations Database	88
8.1.1	Commands	88
8.1.2	Instrument Telemetry	88
8.1.3	Instrument Limits	88
8.1.4	Database Approval	89
8.2	Operational Displays	89
8.3	Operations Procedures	89
8.3.1	EOC Definition	89
8.3.2	I&T Procedures to EOC Operations Procedures Conversion	89
8.3.3	I&T Databases to EOC Operations Databases Conversion	90
8.3.4	Flight Unique Procedures	90
8.3.5	Procedure Submittal	90
8.3.6	Approved EOC Procedures	90
8.3.7	Procedure Verification	90
8.4	Narrative Procedures	90
8.4.1	Standard Operating Procedures	91
8.4.2	Contingency Operating Procedures	91

TABLE OF CONTENTS (continued)

SECTION/ PARAGRAPH	TITLE	PAGE
	APPENDIX I	
10	SPACECRAFT CONTROLS COMPUTER INSTRUMENT REQUIREMENTS	92
10.1	Stored Command Requirements	92
10.1.1	Absolute Time Commands	92
10.1.2	Relative Time Command Sequences	92
10.2	Telemetry Monitor Requirements	92
	APPENDIX II	
20	INSTRUMENT COMMAND PROCESSING REQUIREMENT	95
20.1	Activity Planning Requirements	95
20.1.1	Activity Definition	95
20.1.2	Event Definition	95
20.1.3	Activity Scheduling	95
20.2	Constraint Check Requirements	95
20.2.1	Command Level	95
20.2.2	Activity Level	95
20.2.3	Schedule Conflicts	96
20.3	Real-Time Command Requirements	96
20.3.1	Utilization Plans	96
20.3.2	Command Generation Capabilities	96
20.3.3	Transmission Requirements	96

TABLE OF CONTENTS (continued)

SECTION/ PARAGRAPH	TITLE	PAGE
20.4	Microprocessor Load Handling Requirements	96
20.4.1	Uplink Message Structures	96
20.4.2	Transmission Requirements	96
20.5	Command Database Requirements	96
20.5.1	Command Definition	97
20.5.2	Unique Command Structures	97
20.5.3	Activity Definitions (EOC Command Management)	97
20.5.4	Stored Command Sequences (EOC Command Management)	97
20.5.5	Real-Time Command Sequences (EOC)	97
20.5.6	Utilization Constraints	97

APPENDIX III

30	**TELEMETRY PROCESSING REQUIREMENTS**	**98**
30.1	Decommutation Requirements	98
30.1.1	Engineering Telemetry Format	98
30.1.2	Science Telemetry Format (20 Mbps)	98
30.2	Derived Function Generation Requirements	98
30.3	Status Determination Requirements	98
30.3.1	Mode Definition	98
30.3.2	Event/Mode-Change Detection	99
30.4	Uplink Verification Requirements	99
30.4.1	Command Verification	99
30.4.2	Microprocessor Load Verification	99
30.5	Health and Safety Monitoring Requirements	99
30.5.1	Limit-Check Requirements	99
30.5.2	Alarm Requirements	99
30.6	Display Generation Requirements	99
30.6.1	Parameter Calibration	99
30.6.2	CRT Page Display	100
30.6.3	Strip-Chart Recorder Displays	100
30.6.4	Hardcopy Outputs	100

TABLE OF CONTENTS (continued)

SECTION/ PARAGRAPH	TITLE	PAGE
30.7	EOC Telemetry Database Requirements	100
30.7.1	Telemetry Function Definition	100
30.7.2	Derived Function Definition	100
30.7.3	Mode/Event Definition	100
30.7.4	Limit Check Thresholds	100
30.7.5	Alarm Generation Criteria	100
30.7.6	Command Verification Criteria	101
30.7.7	Display Definition	101
30.7.8	Calibration Parameters	101

APPENDIX IV

40	INSTRUMENT OPERATIONAL ACTION REQUIREMENTS	102
40.1	Contingency Action Requirements	102
40.1.1	Emergency Power-Down	102
40.1.2	Limits/Alarm Reaction	102
40.1.3	Spacecraft Safe hold (SCC running)	102
40.1.4	SCC Halted	102
40.1.5	Other On-board Computers Halted	103
40.1.6	Uplink Transmission Failure	103
40.2	Preactivation Requirements	103
40.3	Spacecraft Maneuver Accommodation	103
40.3.1	Orbit Adjust	103
40.4	Alignment/Calibration Requirements	103
40.4.1	Radiometric Calibration Requirements	103
40.4.2	Geometric Alignment Requirements	104
40.5	Special Observation Requirements	104

APPENDIX V

50	PLANNING AID REQUIREMENTS	105
50.1	Parameter Definition	105
50.1.1	Long Term	105
50.1.2	Short Term	106
50.2	Parameter Specifications	106
50.2.1	Information Accuracy	106
50.2.2	Data Precision	106
50.2.3	Data Frequency	106
50.3	Information Handling Requirements	107
50.3.1	Format	107
50.3.2	Packaging	107

TABLE OF CONTENTS (continued)

SECTION/ PARAGRAPH	TITLE	PAGE
50.4	Access Timeline Requirements	107
50.4.1	Lead Time	107
50.4.2	Retention	107

APPENDIX VI

60	SPECIAL ACTIVATION REQUIREMENTS	108
60.1	Commanding Requirements	108
60.1.1	Special Command Sequences	108
60.1.2	Special Command Constraints	108
60.1.3	Real-time Command Generation	108
60.1.4	Special Command Transmission Requirements	108
60.2	Telemetry Processing Requirements	108
60.2.1	Special Telemetry Formats	108
60.2.2	Special Processing Functions	109
60.2.3	Special Processing Parameters	109
60.2.4	Special Displays	109
60.2.5	Strip Chart Recorder	109
60.3	Remote Support Coordination Requirements	109
60.3.1	Quick-look Playback Handling	109
60.3.2	Voice Communications	109
60.4	Facility Requirements	109

APPENDIX VII

70	ASTER Operation Modes	110
70.1	ASTER Operation Modes Description	110
70.2	Relation Between Spacecraft Bus and ASTER Operation Modes	113

APPENDIX VIII

80	ABBREVIATIONS	114

LIST OF FIGURES

FIGURE	TITLE	PAGE
1	ASTER Operational Timeline	6
2	EOS-AM Spacecraft Mission Phases	16
3	Uplink Paths	17
4	Downlink Paths	18
5	Absolute Time Stored Command Structure	22
6	Absolute Time Stored Command Operation	23
7	Relative Time Command Sequence Structure	24
8	Relative Time Command Sequence Operation	25
9	CTIU Command Processing Flow	27
10	CTIU Telemetry Processing Flow	28
11	SFE Interface Block Diagram	32
12	SSR Basic Configuration	33
13	SSR Science Data Buffer Utilization	35
14	SSR Typical Operating Scenario	36
15	SSR Operation Profile	39
16	Typical Operational Initialization Phase Activities Timeline	40

LIST OF FIGURES (continued)

FIGURE	TITLE	PAGE
17	Orbit Maintenance Scenario	41
18	Spacecraft Operating Modes Availability	43
19	Top Level Space Network Scheduling Process	51
20	EOC / Space Network Scheduling Timeline	52
21	EOC Staffing Structure	56
22	ASTER Operations Concept	60
23	Launch / Ascent Phase Timeline	72
24	Orbit Acquisition Mission Phase Timeline	74
25	DELTA-V Activity Flow	75
26	ICC / EOC FOT Interface	83

LIST OF TABLES

TABLE	TITLE	PAGE
I	ASTER Operation Modes	7
II	Proposed SSR Buffer Sizing	34
III	Spacecraft Bus and ASTER Operating Modes	49
IV	Relative Time Command Sequence List (Tentative)	93
V	ASTER Operating Modes (Detailed)	110

TO BE DETERMINED (TBD) LIST

TBD	SEC. / PAGE	DESCRIPTION	RESPONSIBLE	DUE

This list will be added with the final update

TO BE REVIEWED (TBR) LIST

TBR	SEC. / PAGE	DESCRIPTION	RESPONSIBLE	DUE

This list will be added with the final update.

TO BE SUPPLIED (TBS) LIST

TBS	SEC. / PAGE	DESCRIPTION	RESPONSIBLE	DUE

This list will be added with the final update.

(This page intentionally left blank.)

1 INTRODUCTION

This Instrument Flight Operations Understanding (IFOU) is a statement of the EOS-AM community's understanding regarding the Advanced Spaceborne Thermal Emission and Reflection Radiometer (ASTER) flight operations plans and requirements.

The Japan Resources Observation System Organization (JAROS) revisions, and additions have been included and are to be reviewed with Goddard Space Flight Center (GSFC).

This Instrument Flight Operations Understanding will be updated periodically as requirements evolve and are further defined. Inputs are welcomed from the Instrument Team, Flight Operations Team, ASTER Ground Data System, EOS Ground Systems, NASA Institutional Facilities, and the EOS-AM Project entities.

1.1 Purpose

This IFOU will be used by the Flight Operations Team (FOT), the Instrument Operations Team, EOS Operations Center (EOC) support personnel and ASTER ICC Operations support personnel in defining prelaunch preparation efforts and in verifying operational readiness prior to launch. Requirements for specific types of operational support will be defined and implemented consistent with this IFOU. This IFOU will be used to ensure that instrument needs are properly reflected in other documentation.

1.2 Scope

This document describes the EOS-AM Spacecraft ASTER operations on-orbit and instrument flight operations support. Interactivity with ground systems control and interconnectivity to the EOS ground systems segment are described. Institutional interfaces between Spacecraft, applicable ground systems and the end-user are included. The flight operations scheduling, planning, and operations philosophy are included. Aspects of the Earth Observing System Data and Information System (EOSDIS), as well as the external systems / facilities with which the Spacecraft flight operations elements interface, are only addressed as required to clarify these concepts. The focus is from the Flight Operations Team's perspective

The understandings stated herein are explicitly subordinate to interfaces between ASTER and the EOS-AM Spacecraft, as defined in the documents listed in Section 2.

This document does not take precedence over any of the requirements, specifications, documents or interfaces associated with the Spacecraft or affiliated ground systems.

2 DOCUMENTATION

2.1 Applicable Documents

The concept and content of this document are consistent with the documents listed below:

TBD	Memorandum of Understanding
TBD	ASTER Project Implementation Plan Volume II; Ground System
TBD	Interface Requirement Document
(GSFC) - 421-10-01 30 Oct. 1992	Requirements Document for the EOS-AM Spacecraft
(GSFC) - 420-03-02 01 Dec. 1992	General Instrument Interface Specification
20005396 (SEP-101) 15 April 1993	EOS-AM Spacecraft Contract End Item Specification
(GSFC) - 421-12-11-01 Date: 01 Jan. 1993	Unique Instrument Interface Document for ASTER
20008810 Date: TBD	ASTER Interface Control Document (ICD)

2.2 Information Documents

The following documents amplify or clarify the information presented in this document.

20008529 (OPD-110) 18 May 1992	EOS-AM Spacecraft Operations Requirements
(GSFC) - 420-05-02 13 Nov. 1992	Performance Assurance Requirements for the EOS-AM Observatories
EOS-DN-SE&I-010 15 May 1992	EOS Baseline Description Document (BDD)
EOS-DN-SE&I-031 23 Apr. 1992	Command and Telemetry Requirements Analysis

EOS-DN-C&DH-032 15 Dec. 1991	Command and Telemetry Concept Definition
GSFC-510-30CD/0191 26 Oct. 1992	Earth Observing System Data and Information System (EOSDIS) Flight Operations Segment (FOS) Operations Concept (Revision 3)
20008502 (UID-101) 04 Sept. 1992	General Instrument Interface Handbook

3 INSTRUMENT DEFINITION

The understandings regarding ASTER are as follows:

3.1 Basic Description

The ASTER is a multispectral imager that covers a wide spectral range, from visible to thermal infrared, on 14 spectral bands. The basic concept of ASTER is to acquire quantitative spectral data reflected and emitted from the Earth's surface in the 0.5 - 2.5 and 8 - 12 atmospheric windows at spatial and spectral resolution appropriate for various science objectives. The ASTER also has a stereoscopic capability in the along-track direction with a base to-height-ratio of 0.6 using the near infrared band.

The general purpose of the science investigation by ASTER data is to study the interaction among the geosphere, hydrosphere, cyrosphere, and the atmosphere of the earth from the geophysical point of view.

The ASTER instrument has 3 spectral bands in the visible and near infrared region with a spatial resolution of 15 m, 6 spectral bands in the short wave infrared region with a spatial resolution of 30 m and 5 spectral bands in the thermal infrared region with a spatial resolution of 90 m.

To meet the wide spectral coverage, the optical sensing units of the ASTER are separated into three subsystems: the Visible and Near Infrared Radiometer (VNIR) subsystem, the Short Wave Infrared (SWIR) subsystem and the Thermal Infrared (TIR) subsystem. These three subsystems separately receive optical signals from the ground, convert them into electrical signals and send the electrical signals to the Common Signal Processor (CSP) subsystem as digital data. The CSP subsystem multiplexes science image signals and system telemetry from three optical sensing units, then transforms these data into proper format. and sends the data to the spacecraft C&DH subsystem. The Master Power Supply (MPS) subsystem converts electrical power provided from the Spacecraft into the required power for each of the ASTER units.

All three radiometers simultaneously cover a 60 km imaging swath with a pointing capability in cross-track direction within the range of 232 km. Only the VNIR radiometer has a larger pointing capability up to 24 degrees of the center of the swath for an emergency purpose.

ASTER does not contain an instrument microprocessor, therefore all commanding will be accomplished by either real-time command or as stored Absolute Time Commands (ATC) or by Relative Time Command Sequence (RTCS) from the Spacecraft Control Computer (SCC). A RTCS is a command sequence which is stored in the SCC and is used for the execution of repetitive functions.

ASTER instrument raw data contains image, engineering, and housekeeping data. ASTER telemetry data is recorded on-board the Spacecraft and transmitted (downlinked) during scheduled EOS-AM / TDRS contact periods. The downlinked data is packetized and packet types assigned Application Process Identifiers (APID's) according to the data source.

3.2 Instrument Operations

ASTER nominally operates for 16 minutes full mode observation followed by 1 minute stereo mode observation per segment of the full mode observation in day time and for an additional 4 minutes TIR observation mode in night time over any continuous two orbit period commencing with the crossing of the night-to-day terminator. By specific request, the VNIR may be operated independently in day time, and the SWIR may operate in night time simultaneously with TIR. The observation over a orbit may be divided into segments. The instrument operation conditions are limited by Spacecraft power, thermal and data rate constraints and instrument design constraints described in paragraph 3.2.6.2 "ASTER Operating Constraints". The instrument activities are preplanned and scheduled.

The SCC commands necessary to carry out the instrument mission objectives are loaded by the EOS Operations Center (EOC) during EOS-AM/TDRSS contact periods. Figure 1 depicts a typical ASTER operational timeline over a 24 hour period.

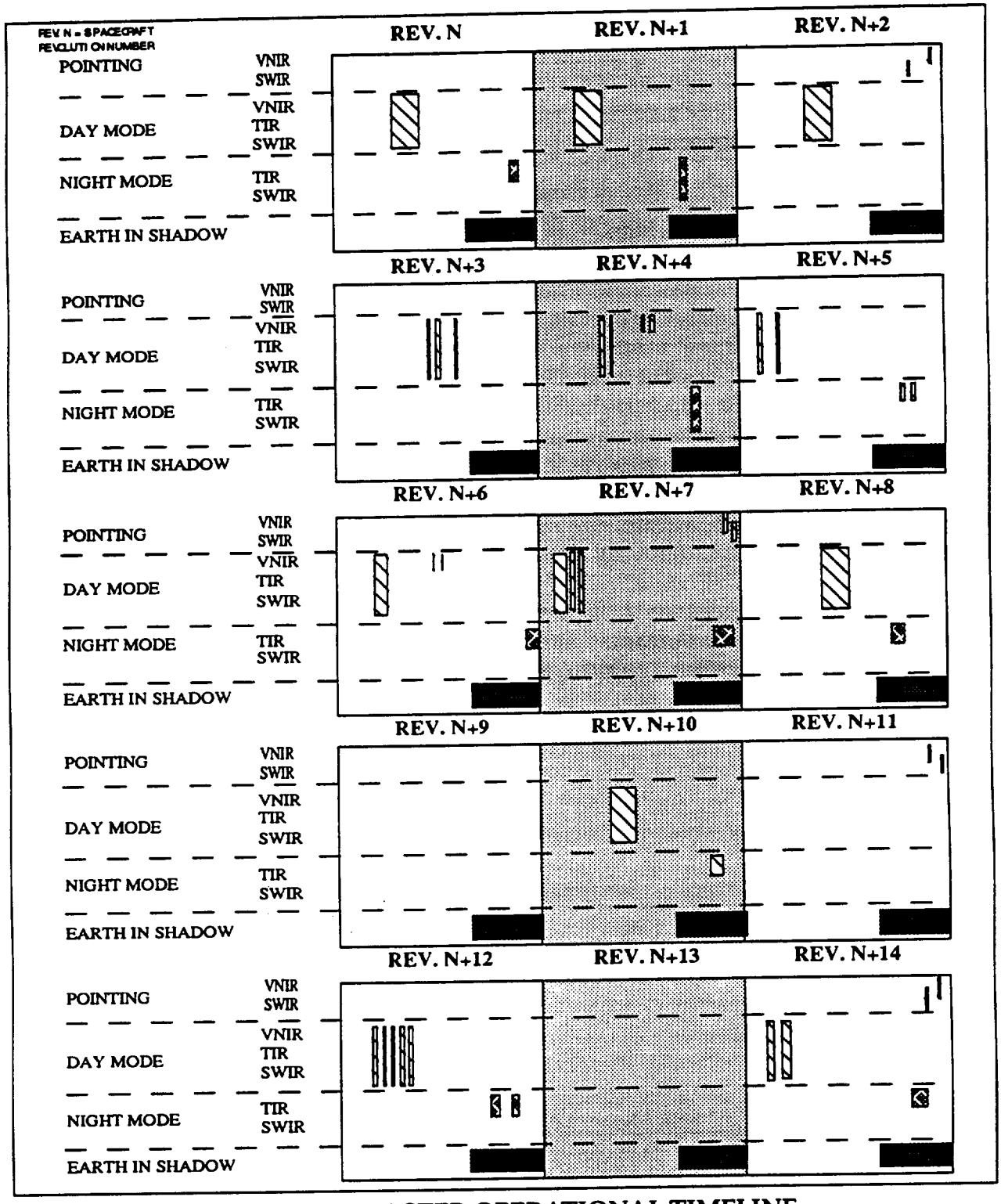

FIGURE 1 ASTER OPERATIONAL TIMELINE

3.2.1 Operating Modes, States and Configurations

The ASTER modes and corresponding data rates, are identified in Table I.

TABLE I ASTER OPERATION MODES

OPERATION MODE	SCIENCE DATA RATE (Mbps)	COMMENTS
Full Mode	89.2 peak	VNIR, SWIR & TIR observation in day time
VNIR Mode	62.038 peak	VNIR observation in day time
V/Stereo Mode	31.019 peak	VNIR stereo bands (3N & 3B) observation in day time
TIR Mode	4.109 peak	TIR observation in night time
SWIR & TIR Mode	SWIR - 23.053 TIR - 4.109	SWIR & TIR simultaneous observation in night time
Calibration Mode	VNIR - 62.036 SWIR - 23.053 TIR - 4.109	Calibration will normally be performed at night
Pointing Mode	0	VNIR & SWIR pointing change
Standby Mode	0	Minimum power mode between observations
Launch Mode	0	Survival heater on Launch-lock on
Launch-lock Off Mode	0	Launch-lock release
All Off Mode	0	Instrument powered down
Survival Mode	0	Survival heater on
Safe Mode	0	Reduced power
Other Modes	0	See Appendix VII

Following is a brief description of the ASTER operating modes :

a. Full Mode – The full mode operation consists of concurrent observation of all three radiometers (VNIR SWIR and TIR) in day time. The full mode operation is usually followed by the VNIR stereo mode operation to compensate about 1 minute overhead time.

b. VNIR mode – Only VNIR radiometer operates in day time with the science data acquisition mode.

c. VNIR/Stereo Mode – VNIR radiometer operates in the same way as VNIR mode. Only bands 3N and 3B data are sent to the Common Signal Processor (CSP) to save data rate.

d. TIR Mode – Only TIR radiometer operates in night time with the science data acquisition mode.

e. SWIR and TIR Mode – Both SWIR and TIR radiometers operate simultaneously in night time.

f. Calibration Mode – Each of the ASTER instruments is not calibrated simultaneously to avoid excess power consumption. ASTER is calibrated as follows:

- For VNIR there are three calibration modes: OPT CAL, ELE CAL, and DARK CAL Mode. The OPT CAL Mode is the optical calibration using internal halogen lamps, and the calibration light source is introduced from the front of the nadir looking telescope. The ELE CAL Mode is the electrical calibration using electrical calibration signals. The DARK CAL Mode is the operation to observe dark ground or dark sea for acquisition of the dark signal. VNIR will be calibrated every 16 days in a sequence that lasts less than 10 minutes in each of two consecutive orbits. including 8 minutes of pre-calibration.

- For SWIR there are two calibration modes. OPT CAL and DARK CAL Modes. The OPT CAL Mode is the optical calibration using internal halogen lamps. The DARK CAL Mode is the operation which observes dark ground or dark sea for getting the dark signal. SWIR will be calibrated every 16 days in a sequence that lasts 26 minutes in each of two consecutive orbits, including 10 minutes (TBR) of pointing, 8 minutes of standby2, 3 minutes of preparation and 10 minutes of calibration.

- For TIR there are three calibration modes. SHORT-TERM CAL Mode, LONG -TERM CAL Mode for optical calibration, and ELE CAL Mode for electrical calibration. The LONG-TERM CAL Mode consists of two calibration modes. OPT CAL and ELE CAL Mode. The SHORT-TERM CAL

Mode is the calibration using the blackbody heat source controlled at 770 K and is normally performed before and after each observation, each calibration lasting about 30 seconds. If a series of successive short-duration observations separated by short time intervals are scheduled, the SHORT-TERM CAL Mode will be performed at the beginning of the each observation and at the end of the last observation of the sequence.

The LONG-TERM CAL is the calibration mode using the blackbody heat source heating up from 270 K to 340 K, and is performed every 16 days. At three or four times during the period of heating up the blackbody for 35 minutes, the OPT CAL data will be taken for 30 seconds for each calibration. The ELE CAL Mode is performed after each OPT CAL Mode. TIR should be operated in the STANDBY Mode for 211 minutes after the LONG-TERM CAL Mode in order to cool down the blackbody heat source.

ASTER currently plans to perform all calibration modes, except for the TIR SHORT-TERM CAL Mode, in the three consecutive orbits at every 16 days. Calibration times / schedules and command sequences will be developed and included in the ASTER activity schedule provided to the EOC with scheduled Spacecraft stored command loads.

g. Pointing Mode – All three radiometers have a function to change the center of the swath. In order to reduce jitter on the spacecraft, each subsystem will not change points simultaneously and, except for priority observations, VNIR and SWIR pointings will be performed at night. TIR pointing is normally performed for each observation regardless of day or night.

h. Standby Mode – The ASTER defines two standby modes, STANDBY1 and STANDBY2. STANDBY1 is the minimum power operational mode between observations. STANDBY2 is the preceding step of preparation for VNIR/SWIR/TIR OBS., SWIR/TIR OBS. and SWIR CAL operation.

i. Launch Mode – This is the minimum power mode which will be used for launch. The ASTER state is survival heater on and launch-lock on.

j. Launch-lock Off Mode – VNIR and TIR use the paraffin-actuator as the launch-lock mechanism for the VNIR optics and the TIR scan mirror. The launch-lock release is carried out in this mode.

k. All Off Mode – This is the instrument power off mode which will be used for transportation on the ground and for eventual instrument shutdown at the end of the mission.

l. Survival Mode – This is an emergency mode in which only survival heaters are on. Details are TBD.

m. Safe Mode – This is an emergency mode in which the ASTER is in a reduced power standby state (TBD). Details are TBD.

n. Other Modes – Cool-down Mode, Preparation-1 Mode, Preparation-2 Mode, TIR Getter Mode, and TIR Cool-down Mode are described in Appendix VII.

3.2.2 Microprocessor Operation

The ASTER instrument does not contain an instrument microprocessor.

3.2.3 Instrument Commands

Specific ASTER instrument command processing requirements are defined in Appendix II.

3.2.4 Instrument Telemetry Processing

Specific ASTER instrument telemetry processing requirements are defined in Appendix III.

3.2.4.1 Science Data Processing

Specific ASTER instrument science data processing requirements are defined in Appendix III.

3.2.4.2 Engineering Data Processing

Specific ASTER instrument engineering data processing requirements are defined in Appendix III.

3.2.4.3 Housekeeping Telemetry Data Processing

The ASTER housekeeping telemetry data is used by the EOC Flight Operations Team for the following applications:

a. Monitor interaction of ASTER with Spacecraft Bus and other instruments
b. Monitor selected ASTER health and safety parameters.

The ASTER housekeeping data is used by the ASTER ICC for monitoring ASTER health and safety.

Specific ASTER instrument housekeeping telemetry processing requirements are defined in Appendix III.

3.2.5 Bus Data Unit

The ASTER interface with the Bus Data Unit (BDU) is:

TYPE	NUMBER
Relay Drive commands	34
Bi-Level telemetry	2
Passive Analog telemetry	27
Active Analog telemetry	17

3.2.6 Operating Constraints

An operating constraint is a limitation imposed on the operation of the Spacecraft Bus and instruments in order to protect or prevent compromise of mission goals.

3.2.6.1 Categories of Constraint/Restraints

Constraints have been defined into the following six categories based upon the implications of violating those constraints:

a. Mission Critical (MC) - Those constraints which prevent permanent loss of a system, subsystem, or a component which would cause the .. termination of the mission. The damage to the hardware can be due to anything from a one time event to improper usage over an extended period of time.

b. Hardware Critical (HC) - Those constraints which prevent permanent loss of Spacecraft hardware from which recovery to full Spacecraft operational state can not be made. The damage to the hardware can be due to anything from a one time event to improper usage over an extended period of time.

c. Configuration Critical (CC) - Those constraints which prevent the loss of Spacecraft hardware from which recovery to full Spacecraft operational state can be made by switching to redundant hardware.

d. Data Critical (DC) - Those constraints which prevent permanent loss or corruption of a particular set of data, either command or telemetry.

e. Temporary Data Loss (TL) - Loss or corruption of data, either command or telemetry, that can be regained.

f. Operational Restriction (OR) - Guidelines for procedures when a number of possible operational options exist or information relevant to the proper operation of the Spacecraft.

3.2.6.2 ASTER Operating Constraints

The ASTER operating constraints are as follows :

3.2.6.2.1 Initial Activation Operating Constraints

a. Initial activation shall be performed during real-time contact with the Spacecraft.

3.2.6.2.2 ASTER Power Constraints

a. ASTER peak power will be 761 w.

b. The 2 orbit average power will not exceed 470 w.

c. The 1 orbit average power will not exceed 525 w.

3.2.6.2.3 ASTER Pointing Mode Operating Constraints

a. Crosstrack pointing for each instrument will be done at different times to reduce spacecraft jitter.

3.2.6.2.4 VNIR Operating Constraints

a. The maximum number of observations per orbit will be 15.

b. The maximum observation time per orbit will be 16 minutes VNIR full operation plus 5 minutes VNIR/Stereo only operation.

c. The maximum number of pointing changes per orbit will be 4.

d. The maximum number of pointing changes over 5 years will be 20,000.

e. The maximum number of observations averaged over 5 years will be 4 - 6 per orbit.

f. Cooling time for calibration light source (halogen lamp) requires at least approximately 90 minutes.

g. Additional VNIR operating constraints are TBD.

3.2.6.2.5 SWIR Operating Constraints

a. The maximum number of observations per orbit will be 5.

b. The maximum observation time per orbit is 16 minutes. The maximum observation duration for night operation is 2 minutes.

c. The maximum number of pointing changes per orbit will be 4.

d. The maximum number of pointing changes over 5 years will be 20,000.

e. The maximum number of observations averaged over 5 years will be 2 -3 per orbit.

f. Additional SWIR operating constraints are TBD.

3.2.6.2.6 TIR Operating Constraints

a. The maximum number of observations per orbit will be 6.

b. The maximum observation time per orbit will be 16 minutes in day time and 4 minutes in night time.

c. The maximum number of pointing changes per orbit will be 4

d. The maximum number of observations averaged over 5 years will be 2 -3 per orbit.

3.2.6.2.7 Other Operating Constraints

a. The maximum number of observations per orbit for Full Mode operation will be 5.

b. Additional ASTER operating constraints are TBD.

3.2.7 Initial Activation

ASTER activation will be performed during real-time contact with the Spacecraft.

ASTER will be powered on and checked out in stages during the Spacecraft Operational Initialization Mission Phase per the ASTER Activation Procedure (TBS). The sequence for each instrument is as follows :

a. Launch-lock off
b. Cool-down
c. TBD
d. TBD
e. TBD
f. Series of instrument activities to be conducted per procedure and activation schedule.

At the completion of the Activation Procedure ASTER is commanded to the TBD Mode and SCC Stored command loads will be loaded and verified for the scheduled science mission.

3.2.8 Initial Instrument Operation

To be described by JAROS. To be added (TBS).

4 OPERATIONAL SYSTEM DEFINITION

The understandings regarding operation of the EOS-AM Spacecraft and ground system, as each relates to instrument operation, are as follows:

4.1 Spacecraft Bus

The EOS-AM Spacecraft Bus provides the platform for science instrument observations, and provides the environment and services necessary to sustain instrument operability.

The EOS-AM Spacecraft mission can be described by seven mission phases. Each mission phase represents a predefined period during which a set of interrelated operations and activities are performed. The primary activities associated with these mission phases are:

a. Prelaunch -- Launch readiness of the Spacecraft, launch vehicle, and associated ground elements is established and verified.

b. Launch / Ascent -- The launch vehicle places the Spacecraft in the injection orbit and the Spacecraft senses separation from the launch vehicle.

c. Orbit Acquisition Initialization -- A positive Spacecraft energy balance and a S-Band communications link is established. A stable earth-oriented attitude is attained.

d. Orbit Acquisition -- The Spacecraft performs the maneuvers necessary to achieve operational orbit. These maneuvers are designed by the cognizant operations elements and initiated by ground command under Flight Operations Team control.

e. Operational Initialization -- The Spacecraft operational orbit is acquired. A complete housekeeping and instrument equipment checkout is performed by the Flight Operations Team with technical direction from the Spacecraft Bus contractor and the ASTER Instrument Operation Team including ASTER instrument contractors. A fully operational Spacecraft state is established.

f. Operational -- The Flight Operations Team is responsible for conducting Spacecraft operations. Proper Spacecraft orbit is maintained and full resources to the instruments are provided during the science mode.

g. End of Mission -- Upon decision to end the Spacecraft mission, the Spacecraft is placed in a dormant state and permitted to experience a normal orbit decay to re-entry into the Earth's atmosphere.

Figure 2 depicts a top-level flow of the EOS-AM Spacecraft mission phases.

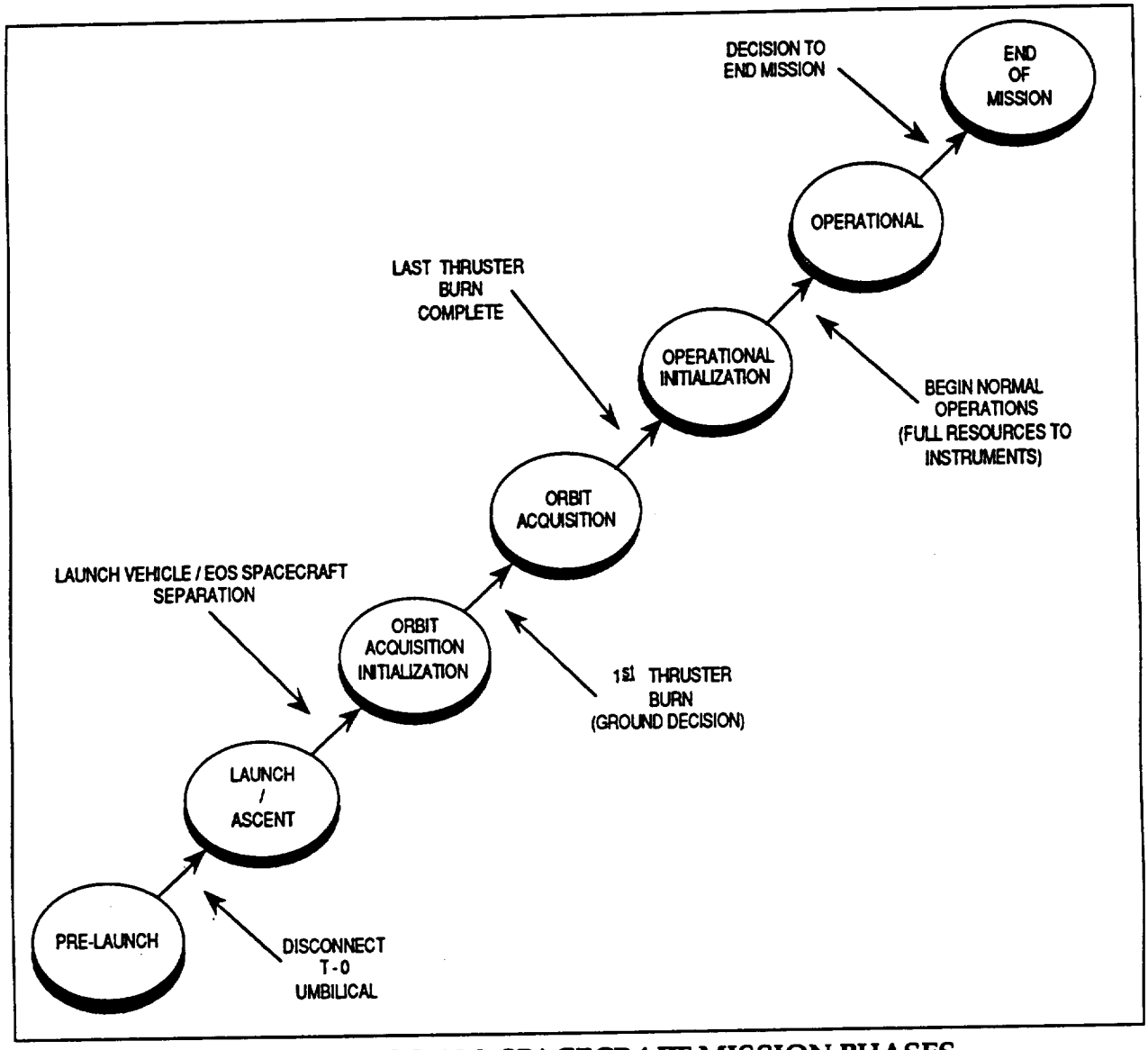

FIGURE 2 EOS-AM SPACECRAFT MISSION PHASES

4.1.1 Command and Telemetry Systems

The Spacecraft Bus command system provides the primary means of controlling the Spacecraft and instrument operations while in orbit. The Spacecraft Bus telemetry system provides the means for monitoring Spacecraft status, health and safety, and for acquiring/storing and retrieving EOS-AM science data. Command and telemetry systems hardware also generates and distributes timing signals, and produces the relative time code which appears within the telemetry format.

During normal operations, 150 Mbps science playback data (when commanded) and 16 kbps real-time housekeeping telemetry data is transmitted throughout each Spacecraft/TDRSS contact. 10 kbps command capability is available to handle uplink transmissions. The other Spacecraft Bus command and telemetry link capabilities are shown in Figure 3 (Uplink Paths) and Figure 4 (Downlink Paths). Commands may be preloaded into the SCC and issued by the stored command capability at designated times. Repetitive sequences of commands may be stored within the SCC and activated by an initiate command to reduce command transmission and storage volume.

SERVICE	SPACECRAFT ANTENNA	DATA RATE	REMARKS
SSA	HIGH GAIN	10 Kbps	NORMAL COMMAND OPERATIONS HIGH-RATE COMMANDS
SMA	HIGH GAIN	1 Kbps	LOW-RATE COMMANDS
SSA	OMNI	125 Bps	CONTINGENCY VERY LOW-RATE COMMANDS
DSN/GN/WOTS	OMNI	2 Kbps	EMERGENCY

LEGEND

SSA = S-BAND SINGLE ACCESS
SMA = S-BAND MULTIPLE ACCESS
DSN = DEEP SPACE NETWORK
GN = GROUND NETWORK
WOTS = WALLOPS ORBITAL TRACKING STATION

FIGURE 3 UPLINK PATHS

SERVICE	TYPE	DATA RATES I	Q	ANTENNA	CONTENT	USE
KSA	Play Back or Real Time	75 Mbps	75 Mbps	High Gain	Science Data	Science Mission Processing
SSA	Play Back		256 Kbps	High Gain	Health & Safety Housekeeping Data SCC Dump Data	As required for Anomaly follow up
	Real Time	16 Kbps	16 Kbps			Routine Operation
			1 Kbps	OMNI	Critical Health & Safety SCC Dump Data	Operation without High Gain Antenna
			1 Kbps			
SMA	Real Time		16 Kbps	High Gain	Housekeeping Data Diagnostic	Operation without SSA
DSN GN WOTS	Real Time	16 Kbps	16 Kbps	OMNI	Housekeeping Data Diagnostic	Operation without TDRSS
	Play Back		512 Kbps			Emergency Operations
DB	Real Time	12.5 Mbps	12.5 Mbps	Direct Access System	Real-Time Science Data	MODIS Real-Time Data
DB/DDL		12.5 Mbps	105 Mbps			MODIS (I), ASTER (Q) Real-Time Data
DP	Play Back	75 Mbps	75 Mbps	Direct Access System	Playback Science Data	Instrument Playback Data
DB	Real Time	12.5 Mbps	105 Mbps	Direct Access System	Real-Time Science Data	MODIS Real-Time Data
DP	Play Back				Playback Science Data	Instrument Playback Data

LEGEND

DB = Direct Broadcast
DDL = Direct Downlink
DP = Direct Playback
DSN = Deep Space Network
GN = Ground Network
WOTS = Wallops Orbital Tracking Station

KSA = K-band single access
SSA = S-band single access
SMA = S-band multiple access
TDRSS = Tracking and Data Relay Satellite System

FIGURE 4 DOWNLINK PATHS

The Direct Access System (DAS) provides for direct-to-user downlink of science data via the X-band transmission system which is independent of the High Gain Antenna (HGA). A summary of Spacecraft downlink services, including the DAS, is shown in Figure 5 (Downlink Paths).

Normal operation will be to configure the DAS for continuous operation in the Direct Broadcast (DB) mode, providing uninterrupted output of real-time MODIS science data along the orbital path. When scheduled by the EOC, the DAS Direct Broadcast/Direct Downlink (DB/DDL) mode will provide direct-to-user ASTER science data on the X-Band Q channel, in addition to the MODIS data on the X-Band I channel.

The DAS Direct Playback (DP) mode is considered an emergency mode and will be used only in the event the Solid State Recorder (SSR) science data cannot be played back through the HGA.

The EOC scheduling function will coordinate DAS operations with the user ground stations. The Spacecraft DAS services will be managed via the SCC stored command and RTCS capability.

4.1.2 Spacecraft Controls Computer

The Spacecraft Controls Computer (SCC) provides the hardware, software and firmware support for control of on-board operational processes.

Specific requirements for interaction between SCC functions and instrument operation are defined in Appendix I.

4.1.2.1 Spacecraft Controls Computer Description

There are redundant SCCs, each of which hosts the firmware to provide SCC initialization functions. Both SCCs can be simultaneously powered and host the full software load but only one SCC can be active at any time. Once loaded, the active SCC software provides a real-time Operating System and supports the execution of application software for the Spacecraft subsystems and instruments. The SCC provides a number of application software services to maintain Spacecraft and instrument operability.

a. The SCC Operating System/Executive is a standardized operating system which supports the execution of the SCC applications software and manages the SCC resources (I/O, scheduling, memory management, timing).

b. The Command, Telemetry and Control (CT&C) application interfaces with all SCC-resident software and provides the following services:

1. Validation and distribution of ground commands for SCC applications software execution.

2. Performs system level Fault Detection, Isolation and Recovery (FDIR). The FDIR software resides in the SCC applications programs and in the Telemetry Monitor (TMON).

3. Storage and processing of Absolute Time Commands (ATC) and Relative Time Command Sequences (RTCS).

4. Sequencing control of SCC-issued subsystem and instrument commands (Absolute-time stored commands, Relative-time stored commands, closed-loop control commands and FDIR commands).

5. Performs Spacecraft Time management, and provides for generation and distribution of the SCC Time of Day (TOD) information to the instruments.

6. Collects SCC telemetry for inclusion in the downlinked telemetry stream.

7. Collects, formats and distributes Ancillary data to the instruments via the Command & Telemetry Bus.

c. The Attitude Determination and Control (ADAC) application software provides software to acquire and maintain Spacecraft attitude within the accuracy limits necessary for instrument operation. The ADAC application provides control of the Solar Array Drive and High Gain Antenna via closed-loop control and FDIR commands.

d. The Navigation (NAV) software performs Spacecraft orbit determination and control. NAV provides position and vector information to the ADAC. NAV also provides telemetry data, Doppler compensation information, closed-loop control and FDIR commands.

e. The Thermal Monitor and Control Software (TMCS) provides autonomous control of the active Spacecraft thermal control elements [Heater Controller Electronics (HCEs) and Capillary Pump Heat Transport System (CPHTS)] to maintain the Spacecraft bus and instrument temperatures within allowable operational limits. The TMCS provides telemetry data, closed-loop control and FDIR commands.

f. The Power Monitor and Control Software (PMCS) provides autonomous control of the Electrical Power System (EPS), including battery charge control and automatic load shedding. The PMCS provides telemetry data, closed-loop control commands and FDIR commands.

The Telemetry Monitor (TMON) will be used to monitor critical Spacecraft bus and instrument telemetry. TMON provides the on-board capability to monitor spacecraft housekeeping data and SCC memory and to initiate autonomous action when predefined anomalous conditions occur. TMON has the capability to mask out telemetry information, perform logical operations on the telemetry information and compare the results to predefined values. If specific anomalous conditions occur, TMON will trigger predetermined actions which may be 1) no action, 2) issue a spacecraft command, or 3) issue a command to activate a Relative Time Command Sequence (RTCS). When a TMON action is triggered, a message will be inserted in the spacecraft activity log which will specifically define the action taken. TMON is table-driven via the telemetry monitor tables, which are ground-controllable. Each TMON function may be individually enabled or disabled by ground command. Each TMON function may also be inhibited from issuing its predetermined commands, while still being allowed to perform its comparison check and notify the activity log if an anomalous condition is detected.

The Fault Detection, Isolation and Recovery (FDIR) system is designed to autonomously reconfigure the Spacecraft in response to predefined survival-critical hardware or software failures. The intent of the FDIR is to minimize autonomous switching, while protecting the Spacecraft Bus and instruments and providing those services required for survival. Anomalies which are not time critical will be resolved by ground intervention rather than FDIR action. Most of the FDIR software resides in the SCC application software programs. FDIR utilizes the TMON software to perform simple, table-driven FDIR functions.

The FDIR system monitors the state of various Spacecraft hardware and software functions, determines fault occurence and generates fault recovery commands to the Spacecraft. When necessary, the FDIR controls the Spacecraft entry into Safe

Mode and Survival Mode. Since the SCC may not be functional during these modes, some FDIR functions are distributed in hardware thoughout the Spacecraft. If the SCC is non-functional, stored command and RTCS operation will also be interrupted. Safe Mode and Survival Mode recovery will be accomplished only by ground command.

4.1.2.2 Spacecraft Controls Computer Operation

During normal flight operations a SCC stored command table memory load will be performed once per day with the list of Absolute Time Commands (ATC) and associated time tags necessary to perform Spacecraft operations for the next 24 hours. Figure 5 shows the stored command structure.

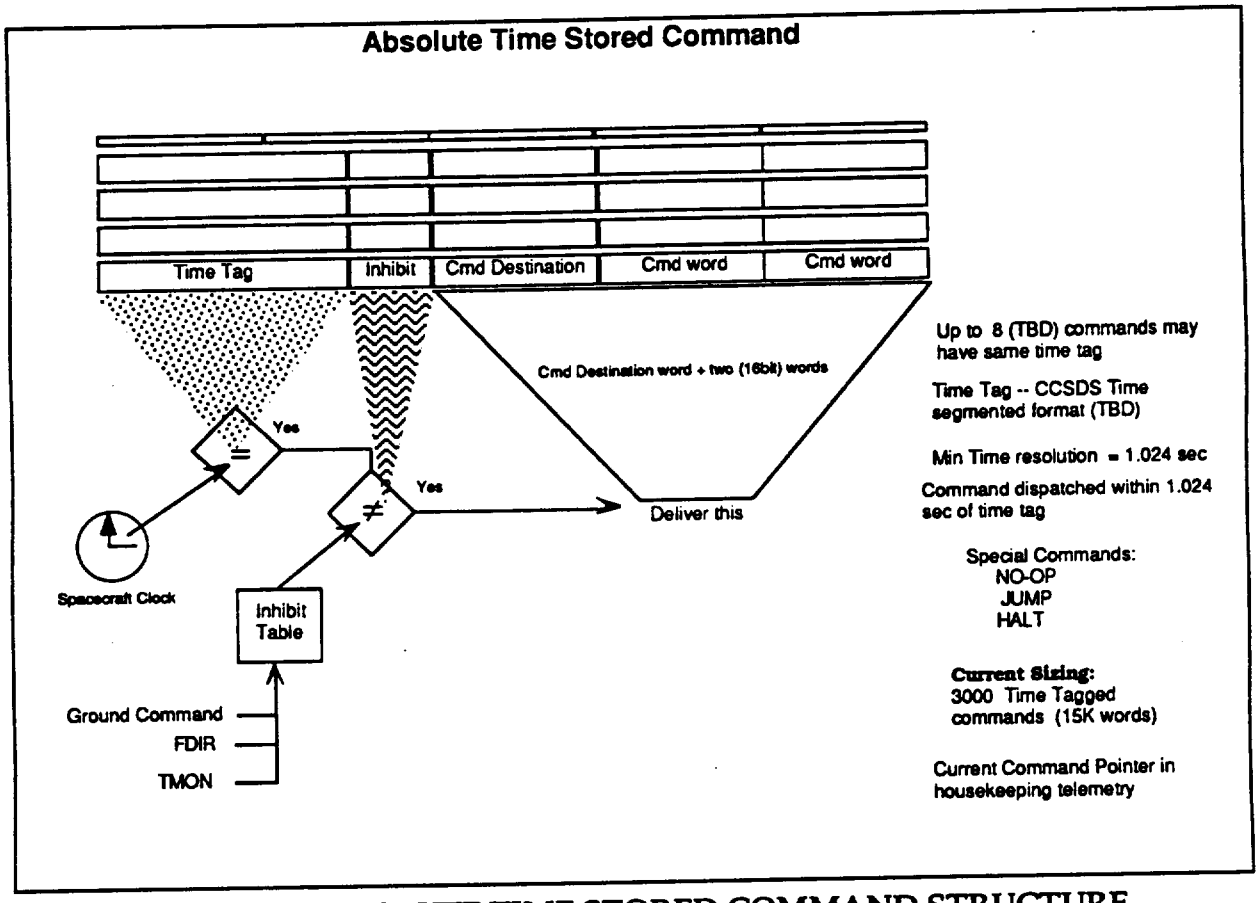

FIGURE 5 ABSOLUTE TIME STORED COMMAND STRUCTURE

The SCC will distibute each stored command to the appropriate spacecraft or instrument subsystem when the time tag matches the Spacecraft time. The command time tag resolution is 1.024 seconds. The SCC has the capability to accept, store and distribute up to 3000 stored commands. Each stored command has an associated inhibit identifier by which the SCC identifies the functional group to which the command belongs. All commands in a functional command group (as determined by the SCC inhibit table) may be inhibited from execution by either ground command or FDIR/TMON generated command. Figure 6 depicts stored command operation. Stored command loads will be planned to occur at least 6 hours prior to the end of the last stored command load, so there may be up to 30 hours of Spacecraft commands in the stored command table at that time. Specific stored-command requirements for instrument operation are defined in Appendix I.

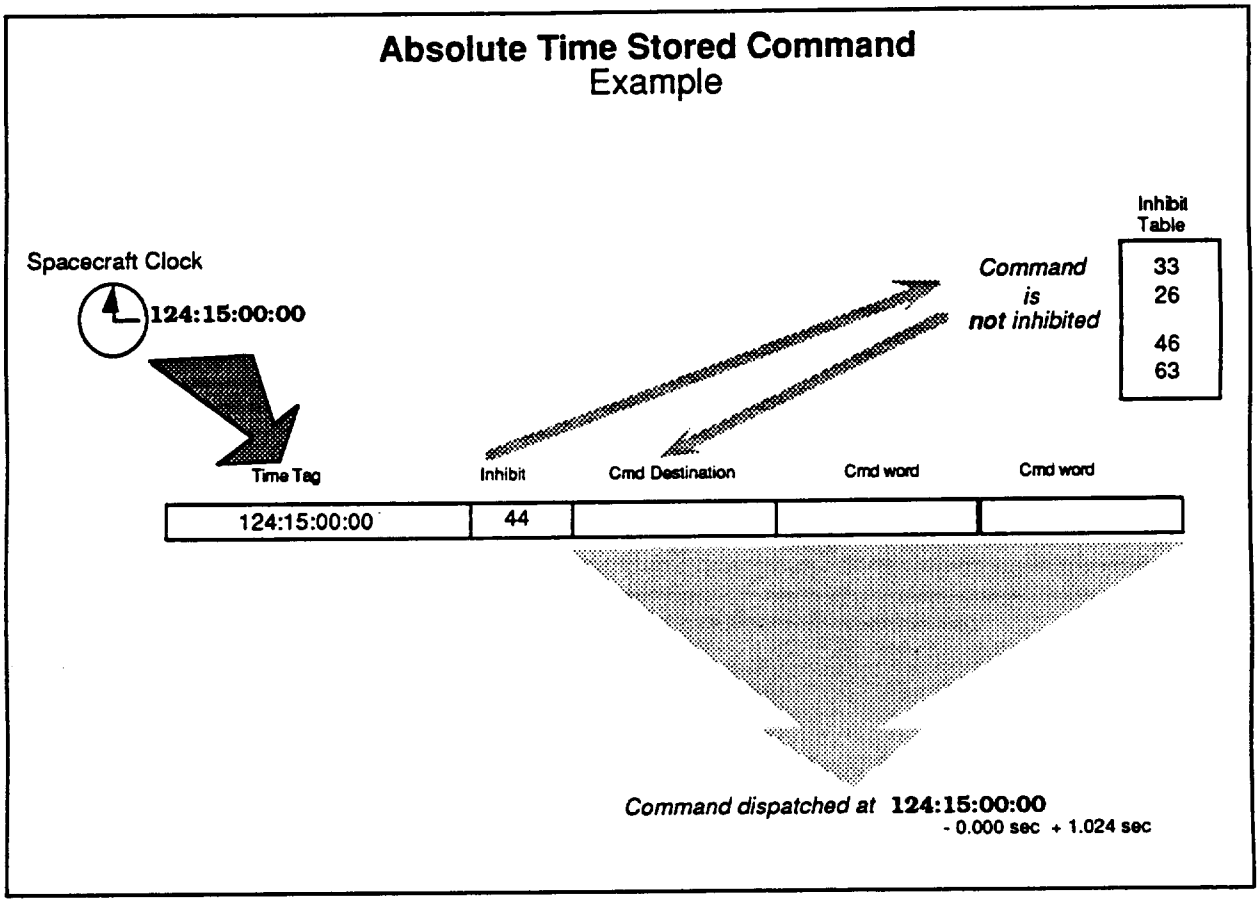

FIGURE 6 ABSOLUTE TIME STORED COMMAND OPERATION

During flight operations, groups of commands known as Relative Time Command Sequences (RTCSs) will be used to provide at least 128 SCC-resident predefined command sequences. Each RTCS has an associated RTCS sequence number, an inhibit ID, and up to 16 Relative Time Commands with associated relative time tags. Figure 7 illustrates the RTCS structure. RTCSs may be executed by ground command, stored command, SCC (FDIR/TMON) generated command or by another Relative Time Command. The relative time tag associated with each command defines the time delay relative to the previously dispatched command. Relative time tags have a resolution of 1.024 seconds. Each RTCS will have an associated inhibit identifier by which the RTCS may be inhibited from execution by ground command or FDIR/TMON generated command. No inhibit identifier will be provided for individual commands within the RTCS. Multiple RTCSs may be active at the same time.

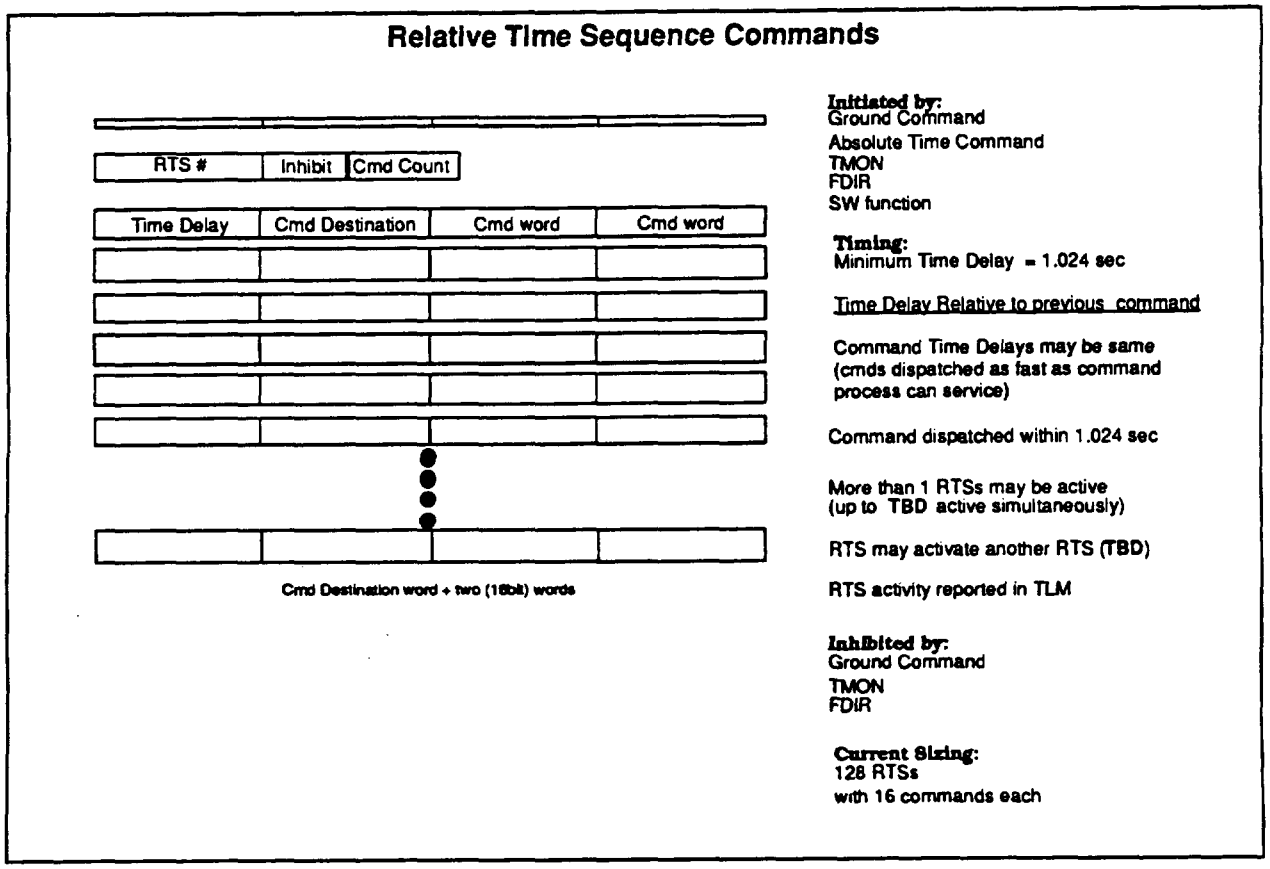

FIGURE 7 RELATIVE TIME COMMAND SEQUENCE STRUCTURE

RTCSs will be loaded into the SCC via ground command and will remain in the SCC memory until removed or over written by ground command. They do not require reloading on a regular basis. RTCSs will be used to perform repetitive functions on-board the Spacecraft (thus reducing the number of stored commands required), and as a command resource for the TMON/FDIR software.

Specialized RTCSs may be loaded, particularly during the Launch through Operational Initialization Mission Phases, for such time-critical operations as solar array release and deployment in order to minimize the need for ground control. These RTCSs will be deleted and/or replaced for normal operations.

Figure 8 depicts RTCS operation.

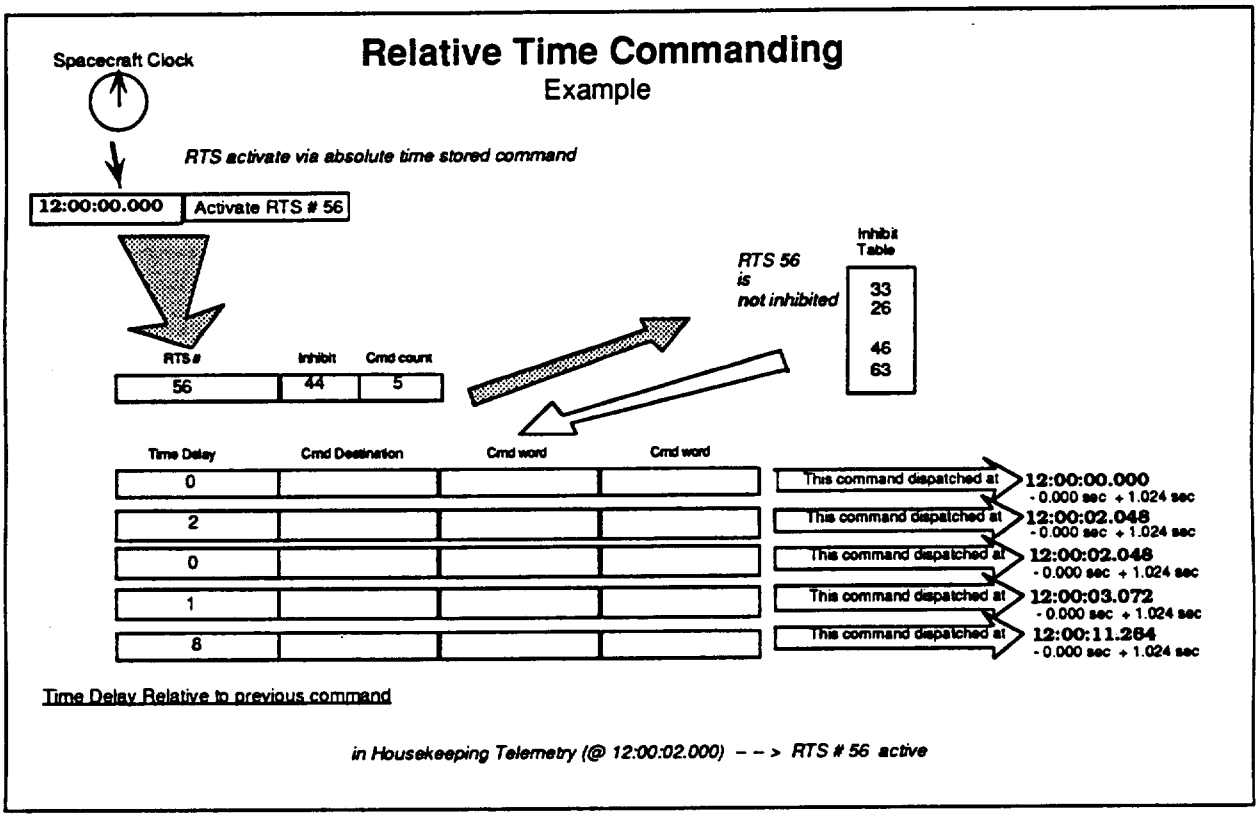

FIGURE 8 RELATIVE TIME COMMAND SEQUENCE OPERATION

4.1.3 Command and Telemetry Interface Unit

The Command and Telemetry Interface Unit (CTIU) is a central component for command and telemetry processing. The CTIU provides the processing and routing of command and telemetry data between the ground system, the Spacecraft Controls Computer and the Spacecraft instruments and housekeeping systems. The CTIU provides the following spacecraft services:

a. Uplink command decoding, processing, and distribution within the spacecraft.

b. Collection and formatting of spacecraft housekeeping and ancillary data in preparation for mass storage or immediate downlink.

c. Spacecraft command, telemetry and closed-loop interfaces to the Spacecraft Controls Computer (SCC).

d. Maintenance and distribution of Spacecraft Time and reference frequencies within the spacecraft including the coordination of Spacecraft Time with ground timing and ranging systems.

There are two redundant CTIUs, only one of which is active at any time and which acts as the Command and Telemetry (C&T) bus controller. The other CTIU is a 'hot standby' and acts as a Remote Terminal (RT). Both CTIUs are always powered when the Spacecraft is powered. Both the active and standby CTIUs can receive and execute uplinked CTIU-specific commands.

The active CTIU receives commands and command data from the ground via the S-Band Transponder, in addition to FDIR commands , closed-loop commands, and Absolute-time and Relative- time stored commands from the Spacecraft Controls Computer. CTIU-specific commands are executed immediately, while SCC-specific commands and command data (SCC table, software or stored command loads) are transferred to the SCC via the CTIU-to-SCC serial interface. The CTIU processes and distributes all other command data (Spacecraft or instrument commands and microprocessor loads) to the appropriate subsystem or instrument via the C&T bus. Since the SCC may be inoperative when the Spacecraft is in safe mode, only the CTIU processes real-time ground commands. Figure 9 illustrates the CTIU command processing flow.

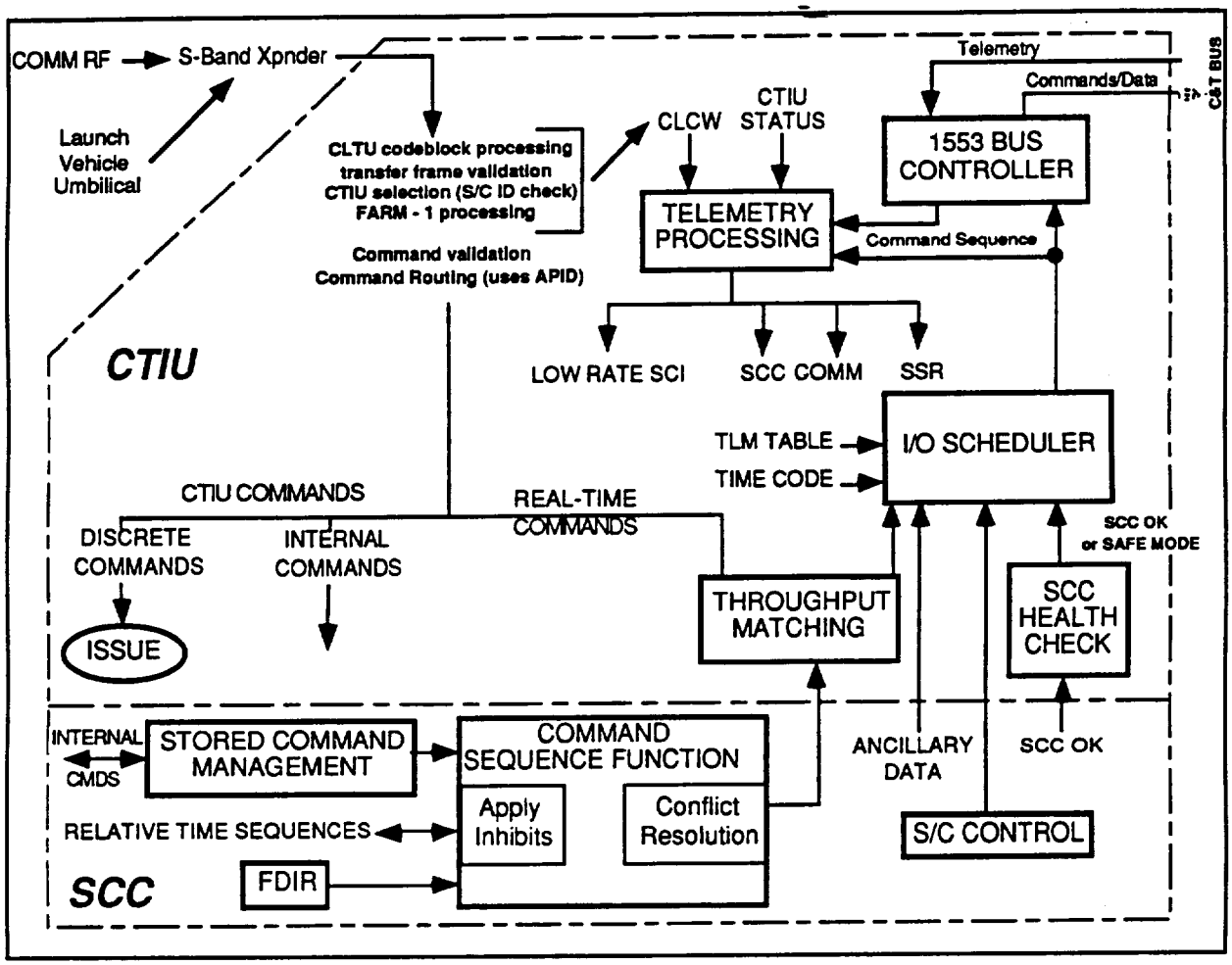

FIGURE 9 CTIU COMMAND PROCESSING FLOW

The CTIU receives Spacecraft subsystem and instrument telemetry via the C&T bus and the Bus Data Units (BDU). The CTIU formats the telemetry data for output to the Solid State Recorder (SSR) and/or the S-Band Transponder. Figure 10 shows the CTIU telemetry processing flow.

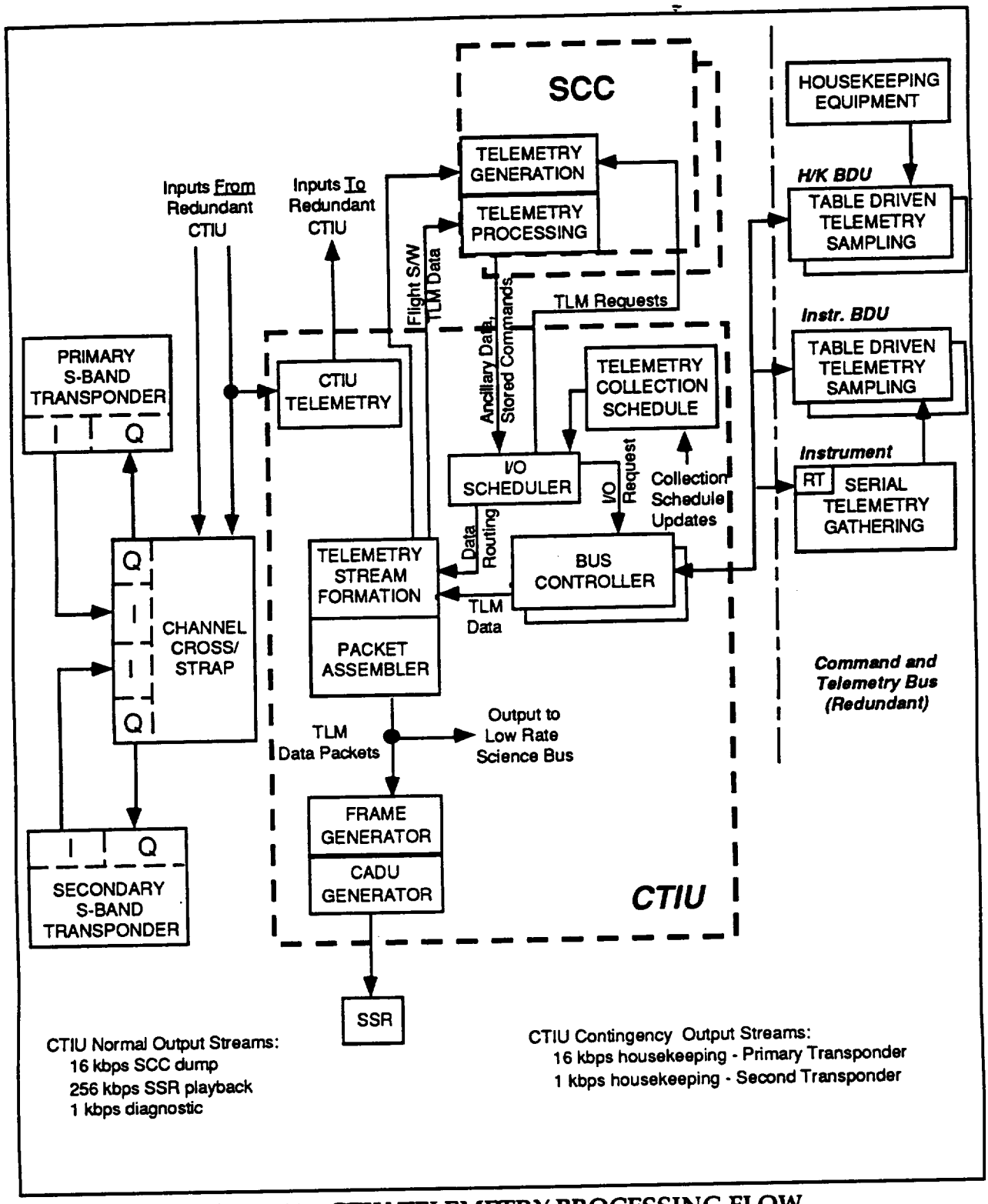

Figure 10 CTIU TELEMETRY PROCESSING FLOW

The active CTIU also provides the Spacecraft master clock and time services. The Master Oscillator (MO) provides the frequency reference signals to the S-Band transponder and CTIU with a frequency accuracy of 1 part in 10^8.

The CTIU propagates the master Spacecraft Clock using the MO frequency reference. The difference between the Spacecraft Clock and Universal Time Code (UTC) is the Clock error, which will grow due to the time-integrated effect of MO frequency errors. The Clock error must be periodically measured, and must be corrected when it approaches 30 milliseconds. The CTIU supports the accurate measurement of the Clock error via the ground based NASA User Spacecraft Clock Calibration System (USCCS). The USCCS is a distributed system using TDRSS White Sands Ground Terminal (WSGT), Network Control Center (NCC), EOS Data and Operations System (EDOS), EOC, and the on-board transponder to determine and correct the Spacecraft Clock error. USCCS software is required in the EOC to process the information and provide the on-board clock bias. The USCCS system currently guarantees calibration accuracy of +/-5 microseconds with respect to UTC. It is anticipated that EOC would request a clock calibration as often as once per day, and will update the Clock bias as necessary to maintain 10 microsecond accuracy.

The Spacecraft Clock may be set and adjusted either by ground command or from SCC-resident software. Both initialization and delta-time (fine adjustment) commands are supported. Clock initialization commands generally cause service interruption in the navigation system and will be used only for system initialization and failure recovery. Delta-time adjustment commands may be executed with a 1 microsecond accuracy and cause minimal disturbance to the system for short periods of time. Delta-time adjustments will be used for clock adjustments when necessary. Clock adjustment and bias update operations will be scheduled to provide minimum perturbation to instrument operations. The EOC FOT will provide coordination of all clock adjustments and bias updates and notification of all users of time-tagged Spacecraft data, as required.

The CTIU also provides two separate time and synchronization services :

a. The Standard Time (ST) service provides moderate accuracy synchronization and Time Of Day (TOD) information in support of Spacecraft housekeeping functions. In general, Spacecraft functions (except for navigation) do not require knowledge of Universal Time Code (UTC), but some functions such as stored command processing do require Time Of Day (TOD) knowledge.

b. The Precise Time (PT) service delivers high accuracy, high precision time data to the science instruments and the on-board navigation function, which have more stringent accuracy requirements. The instruments require an on-board time reference accurate to within 100 microseconds relative to UTC. The desired accuracy for navigation measurement data time tagging is +/- 10 microseconds.

4.1.4 Science Formatting Equipment

The Science Formatting Equipment (SFE) is part of the high-rate data handling system for the Spacecraft. The major function of the SFE is to internally route science data from the SSR, High Rate instrument and Low Rate Science Bus input ports to the appropriate SSR, KSA and DAS modulator output ports. Data routing in the SFE consists of processing the asynchronous packetized input data and transferring the data, in the proper format, to the KSA and/or DAS modulators or to the SSR output (record) port at data rates up to 150 Mbps.

The SFE is fully redundant, including the buses, the bus controllers, and the internally cross-strapped input and output ports. The SFE generates all internally used frequencies.

The SFE input interfaces are defined as follows:

a. The Low Rate Science Bus provides for up to 6 remote terminals including the instruments and the 2 CTIUs. The Low Rate Science Bus will carry telemetry data, ancillary data, and low rate science instrument (CERES and MOPITT) data with a maximum aggregate input data rate of 200 kbps. The SFE will control the Low Rate Science Bus via two Bus Controllers, only one of which will be active at any given time.

b. Each of the SFE High Rate serial input ports will accept variable size packets of science data at up to 50 Mbps from the high rate data Instruments.

c. The SFE will receive SSR playback data on two redundant ports, only one of which will be active at any time. The data rate for the active port will be selectable at 0, 105 or 150 Mbps.

d. The BDU interface provides control of the SFE configuration, operating mode and input/output rates through either SCC or ground generated commands

The SFE output interfaces are as follows:

a. The SFE will output independent data streams to each channel of the redundant KSA and DAS modulators. The KSA modulators each have a single channel, while the DAS modulators each have two independent channels.

b. The SSR record interface consists of unidirectional ports from the SFE to the SSR. Only the SSR Record interface port which is connected to the active SSR controller will be active. The SFE/SSR record data stream consists of Channel Access Data Units (CADU)s at a fixed recording rate of 150 Mbps.

c. The BDU interface provides for the collection of SFE housekeeping telemetry During normal operations the SFE will be configured to output specific data streams, accepting and routing instrument and Low Rate Science Bus data to the SSR and the modulators:

   1. The SSR record output will be configured to record all High Rate instrument and Low Rate Science Bus data.

   2. The KSA modulator output will be configured for SSR playback via TDRSS, requiring ground commands during each TDRSS contact to turn the SFE playback clock on and off.

   3. The Direct Access System (DAS) Direct Broadcast (DB) link will transmit real-time MODIS instrument data.

   4. The DAS Direct Downlink (DDL) will transmit ASTER real-time data.

   The FOT will monitor the SFE performance during real-time housekeeping telemetry data reception.

The SFE interfaces are shown in Figure 11.

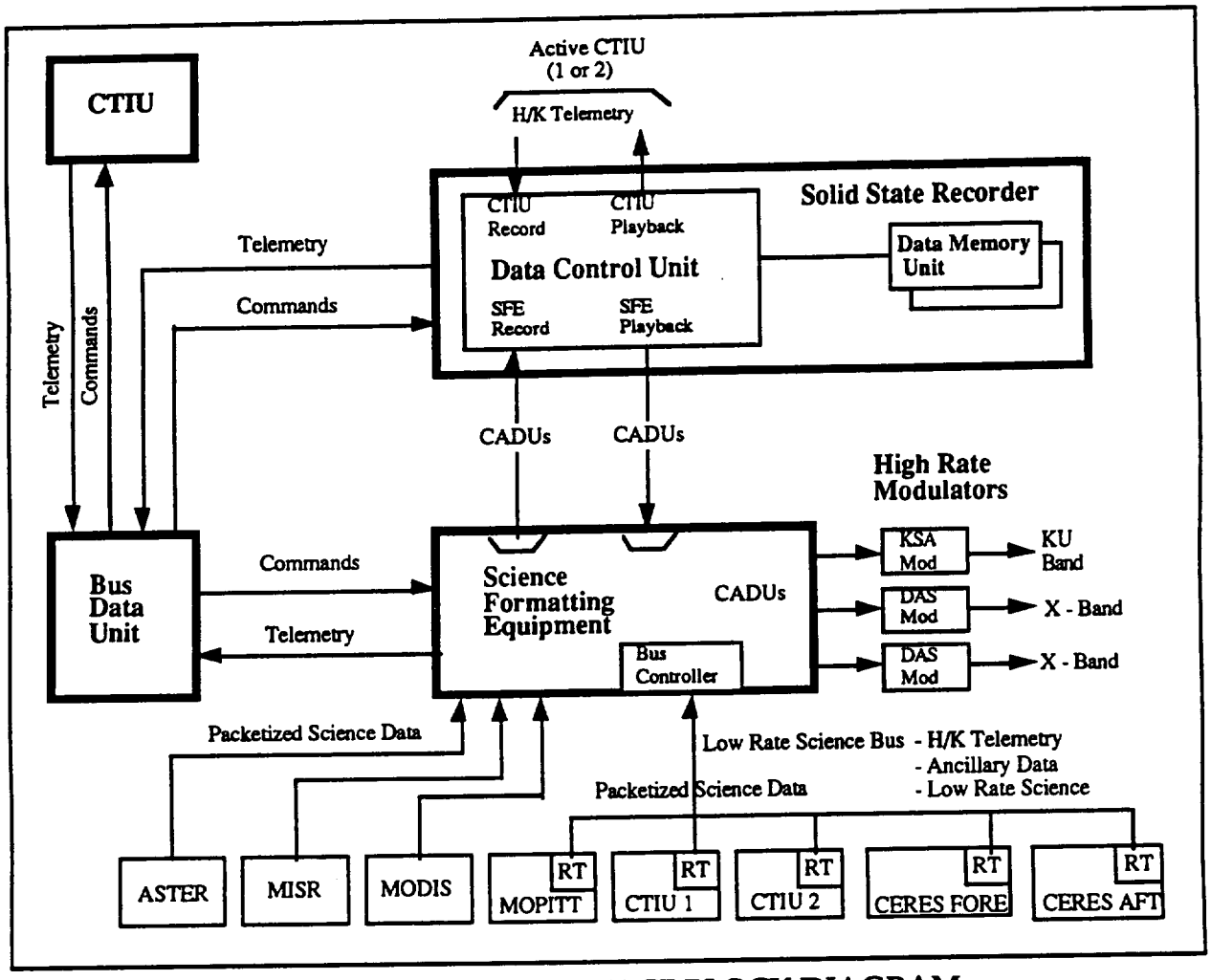

FIGURE 11 SFE INTERFACE BLOCK DIAGRAM

4.1.5 Solid State Recorder

The Solid State Recorder (SSR) is a high capacity data storage device consisting of two redundant Data Control Units (DCUs), and two identical Data Memory Units (DMUs). Figure 12 shows the SSR basic configuration. In operation, only one DCU is active at a given time. The DCU contains the record/playback processing, and command and telemetry processing. A part of the 2.4 Gbit DCU memory (357 Mbit) is allocated to housekeeping telemetry data storage. The total 140 Gbit memory capacity is provided by the two DMUs plus the local memory contained in the DCU. The SSR may be commanded into a Low Power Mode in order to provide the CTIU interfaces and the associated record/playback functions while minimizing the SSR power dissipation. In the Low Power Mode, only the active DMU and its local memory is powered and housekeeping telemetry record and playback via the CTIU is available. Low Power Mode is entered when the SSR is powered up and may be entered by command from the Science Mode.

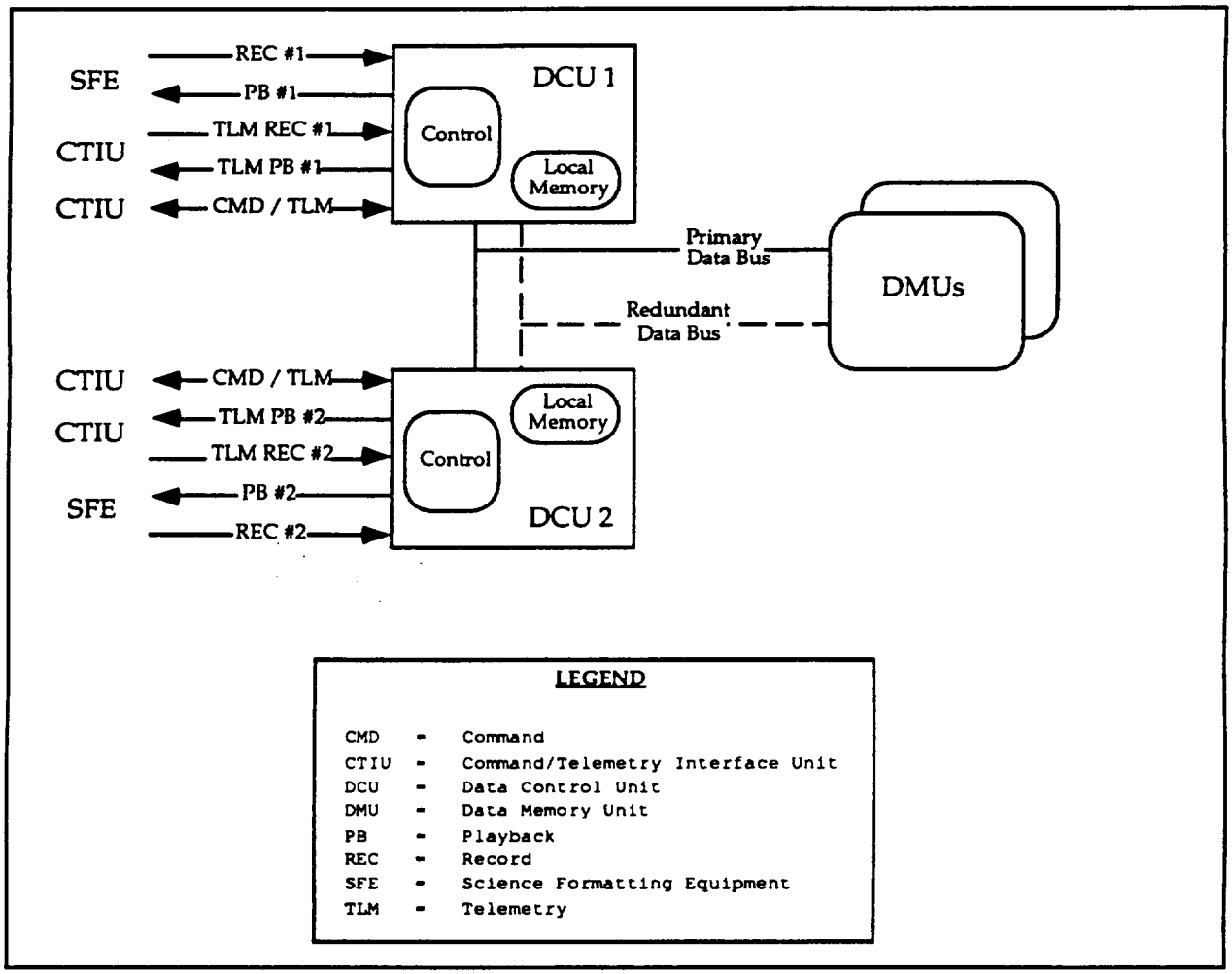

Figure 12 SSR Basic Configuration

The SSR is capable of simultaneously recording and playing back science data via interfaces with the Science Formatting Equipment (SFE). Concurrently the SSR is capable of recording or playing back housekeeping telemetry data via an interface with the CTIU. The SFE and CTIU interfaces operate independently of each other.

The SSR is capable of recording science data from the SFE at a data rate of 150 Mbps. The SSR will sort and record spacecraft science data in separate logical data buffers sorted according to the Virtual Channel Identifier (VCID) of the data source. Up to eight science data storage areas [circular first in first out (FIFO)] buffers may be provided, each accepting data from a single or multiple VCIDs. The four ASTER VCIDs may be directed to a single data buffer. Figure 13 illustrates the SSR science data buffer utilization. This capability will provide for selective playback of the science data. The proposed buffer sizes will accommodate at least one full orbit of data when instruments are operated in their predicted profiles. The current proposed buffer sizes are shown in Table II. Each SSR buffer may be commanded to allow the oldest data to be overwritten or to protect the data (overwrite inhibited).

Table II Proposed SSR Buffer Sizing

Data Type	Buffer Size	Remarks
Housekeeping	357 Mbits	Four Orbits of data
Low Rate Science	357 Mbits	105 minutes of data
MODIS	44.8 Gbits	60 mins day rate, 50 mins night rate
MISR	24.9 Gbits	67 mins of data. > 1 orbit nominal ops
ASTER	69.6 Gbits	12.9 mins at 90 Mbps.

The SSR is capable of playing back recorded science data at a maximum data rate of 150 Mbps. The SSR input and output data streams consist of integral numbers of 8192 bit blocks which are referred to as Channel Access Data Units (CADUs). The first requested CADU for each requested playback shall be preceded by the last 100 to 256 CADUs played back from this buffer during the previous playback. The SSR will not erase science data during playback, but the oldest data will be overwritten when a new recording session occurs directly over previously recorded data. The science data output stream from each buffer will be in the same time order in which it was recorded. The SSR is capable of playing back any ground-specified portion of the stored science data.

The SSR is capable of recording and playing back 16 Kbps Spacecraft housekeeping telemetry data via cross-strapped interfaces to the Spacecraft CTIUs. The housekeeping input and output data streams consist of housekeeping telemetry CADUs which are recorded in and played back from the 357 Mbit circular FIFO DCU buffer. The SSR can record or playback the housekeeping data concurrently with the science data playback, but cannot record and playback housekeeping data simultaneously. After four orbits the DCU buffer will be filled, and the SSR will overwrite the housekeeping data.

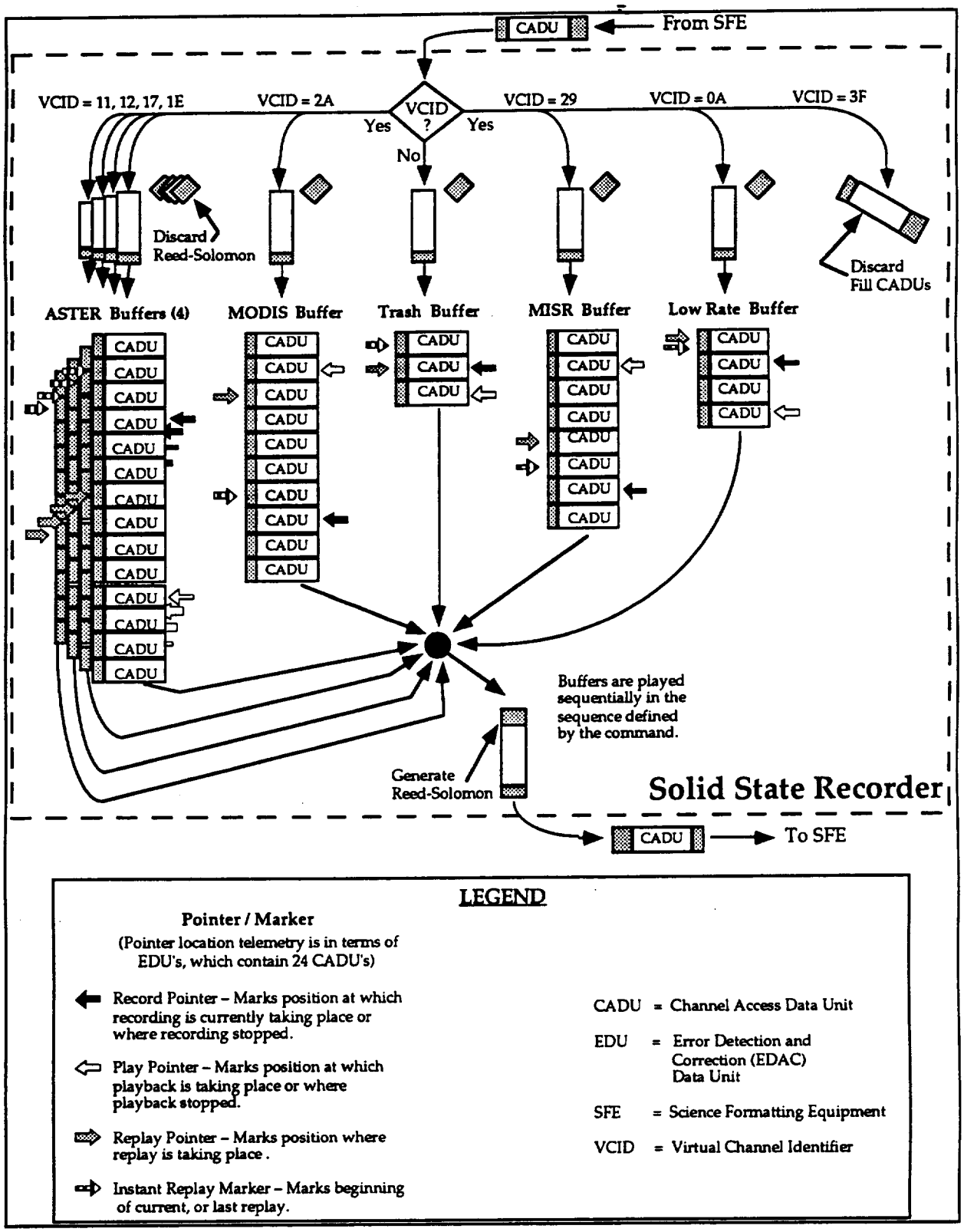

Figure 13 SSR Science Data Buffer Utilization

See Figure 14 for a typical operating scenario.

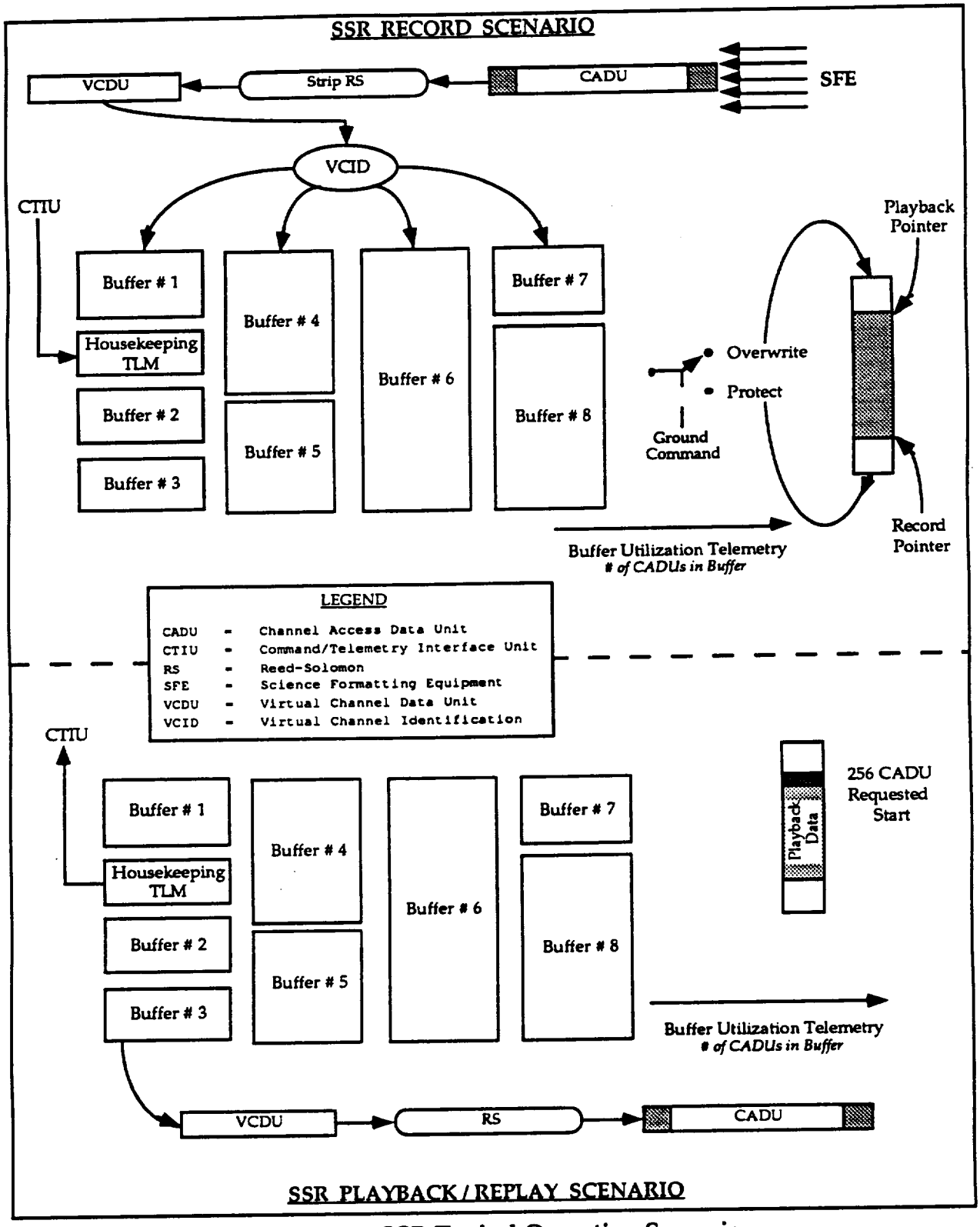

Figure 14 SSR Typical Operating Scenario

The SSR plays back stored housekeeping data at a ground-commanded rate of either 256 Kbps (via TDRSS) or 512 Kbps (via DSN/GN/WOTS). The output data stream consists of integral numbers of CADUs. The first requested CADU for each playback will be preceded by the last 100 to 256 CADUs played back from the buffer during the previous playback. The SSR will not erase telemetry data during playback, but the data will be overwritten when a new record segment occurs directly over previously recorded data regardless of the playback status of the previously recorded data. The telemetry data output stream will be in the same time order in which it was recorded.

The SSR telemetry will provide status information for each buffer which will be evaluated by the EOC to assure complete data retrieval. The status information will indicate:

a. The locations of the beginning of data that has not been dumped
b. The current location of the record pointer
c. The location of the dump pointer.

The EOC will track the instrument science and the housekeeping telemetry data times, the data position in the SSR memory, and the playback status of recorded data in order to ensure no loss of either science or housekeeping data.

Normal SSR operation will be to record all science data, with the SSR always in Record mode and the SSR data input being determined by the instrument operations. The high rate instruments and Low Rate Science Bus output will be recorded in separate buffers. The operating plan for retrieving science data from the SSR is to play back the data during two nominal 10 minute TDRSS contacts during each EOS-AM orbit. At the data rates available, a full SSR (all buffers full) would take approximately 18 minutes to dump completely. Since the peak data generation of the instrument set occurs during the daylight observations, and six to eight minutes of SSR playback will occur during each ten minute TDRSS contact, all data contained on the SSR may not be retrievable during a single 10 minute contact.

TDRSS contact spacing and location will be influenced by the Spacecraft/TDRS/Earth geometry and the TDRSS scheduling requirements, but equally spaced contacts (approximately 40 minutes apart) are the current plan.

SSR operations will be controlled by a combination of stored and real-time commands. Science instrument data start/stop operations will be initiated by stored commands generated by the EOC scheduling function, while memory configuration, mode change, playback and communication link configuration commands will be via real-time commands.

Nominal SSR operations (see Figure 15 for the SSR operation profile) will be as follows:

a. The housekeeping telemetry data will be continuously recorded in the DCU memory, overwriting the housekeeping buffer after approximately 3.5 orbits. The housekeeping buffer will be played back only in the event of a Spacecraft anomaly or to provide specific data for ground analysis.

b. The SSR will continuously record CERES, MOPITT, ancillary and telemetry data from the Low Rate Science Bus via the SFE into the Low Rate buffer. This data will continue to be recorded even while the SSR is being played back.

c. The SSR will record science data from the instruments via the SFE into their respective buffers. The ASTER data may be recorded into one buffer or may be sorted by VCID into four different buffers.Instrument data will continue to be recorded even if the SSR is being played back during the record period.

d. The SSR science data will be played back during each scheduled 10 minute TDRSS contact (twice per orbit). The science data buffers will be played back in sequence, oldest data first, such that sufficient space is available in each buffer to accommodate the science data scheduled to be recorded before the next TDRSS contact.

e. The ASTER and MISR buffers will be completely played back if possible.

f. The LOW Rate and MODIS buffers will nominally never be completely emptied since the instruments will be continuously producing science data. Playing back older science data while simultaneously recording new science data will be the normal operational configuration.

g. SSR playback start and stop will be controlled by ground command.

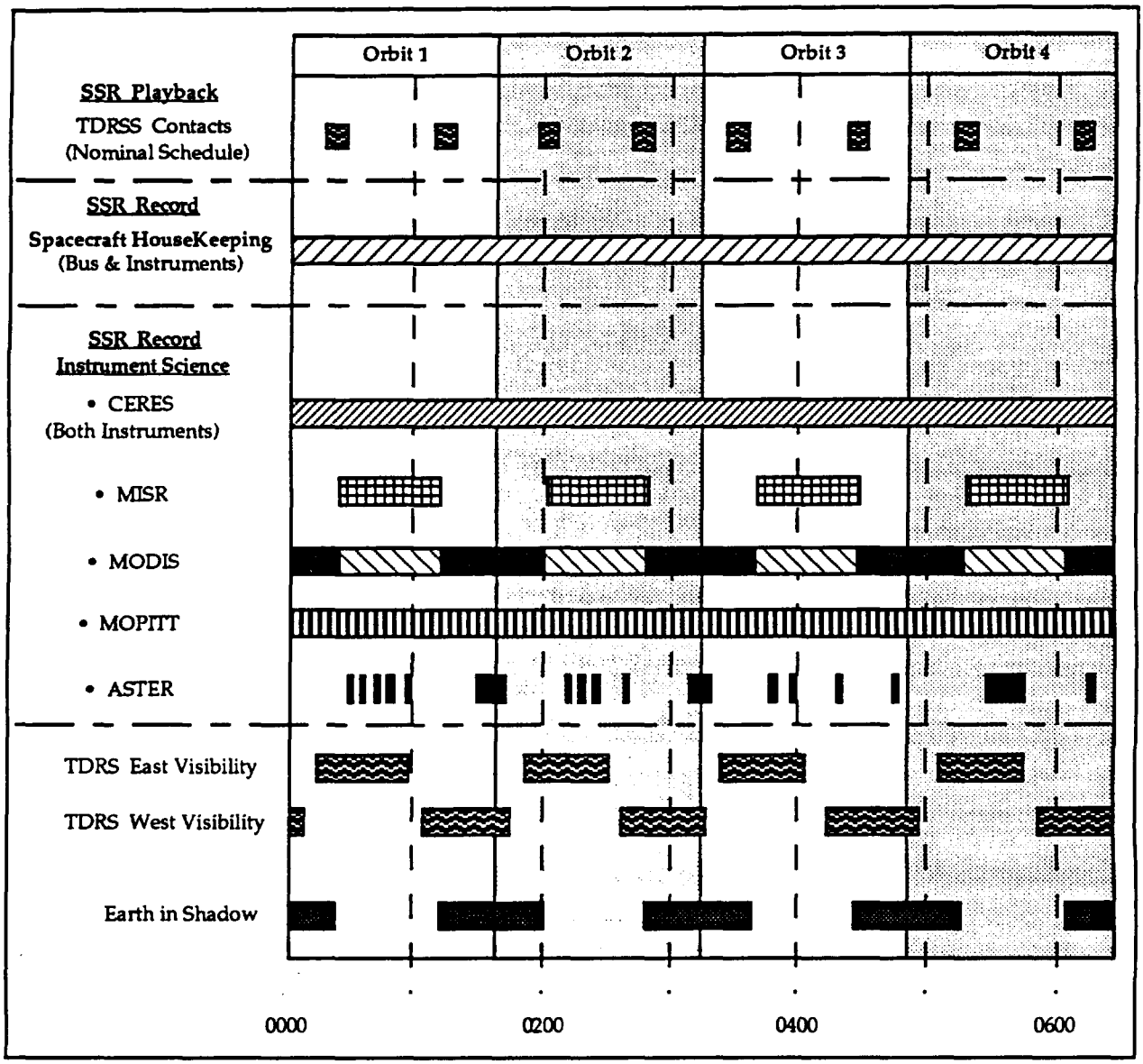

Figure 15 SSR Operation Profile

4.1.6 Bus Data Unit

The Bus Data Unit(s) (BDU) provides standard command and telemetry interfaces between the Spacecraft housekeeping components and instruments. The BDU is an internally redundant device.

The BDUs collect, reformat and transmit housekeeping and instrument telemetry data to the active CTIU via the C&T bus. The BDU provides analog/digital signal conversion and conditioning.

The BDUs also receive command data from the active CTIU via the C&T bus, processing and issuing the commands. BDUs may issue relay drive, logic pulse or serial commands.

4.1.7 Initial Spacecraft Operation

The Spacecraft command and telemetry systems are active during all Spacecraft mission phases, and are fully available to support initial activation and subsequent instrument operation of ASTER.

The Spacecraft operational orbit is acquired during the Spacecraft Operational Initialization Phase. A complete housekeeping and instrument equipment checkout is performed and a fully operational system state is established. The EOC activities are augmented by Spacecraft engineering support from the contractor's facility and ASTER Instrument Operations Team. The operation of ASTER is directed by ASTER ICC.

Figure 16 shows a typical time-line representation of the activities during the Operational Initialization Phase.

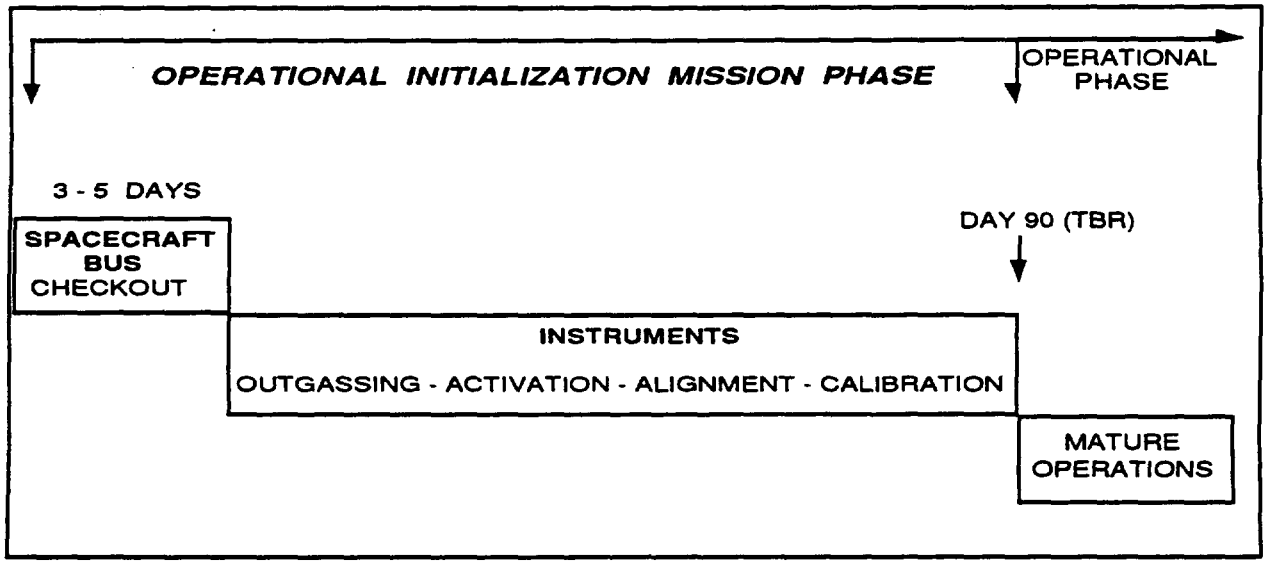

FIGURE 16 OPERATIONAL INITIALIZATION PHASE ACTIVITIES TIMELINE

4.1.8 Spacecraft Maneuver Operations

Throughout the EOS-AM mission, periodic orbit maintenance maneuvers are executed by the Spacecraft to maintain the operational (705 km) orbit requirements. The frequency of orbit adjusts is TBD. Each maneuver is planned and scheduled in advance of execution. Orbit maintenance maneuvers are not enabled without providing an opportunity for appropriate instrument reconfiguration, except in Spacecraft emergency situations. The Propulsion Subsystem provides impulse for orbit maintenance.

The Spacecraft is monitored by the Flight Dynamics Facility (FDF) through TDRSS ranging, and by the EOC, which uses TDRSS Onboard Navigation System (TONS) determinations. When required, orbital adjust calculations are performed to determine the direction and length of the burn, and the required start time. These calculations are used to generate stored commands. Upon completion of the burn, Spacecraft orbital parameters are monitored to determine the need for further correction. Figure 17 summarizes the steps described in paragraph 4.1.8

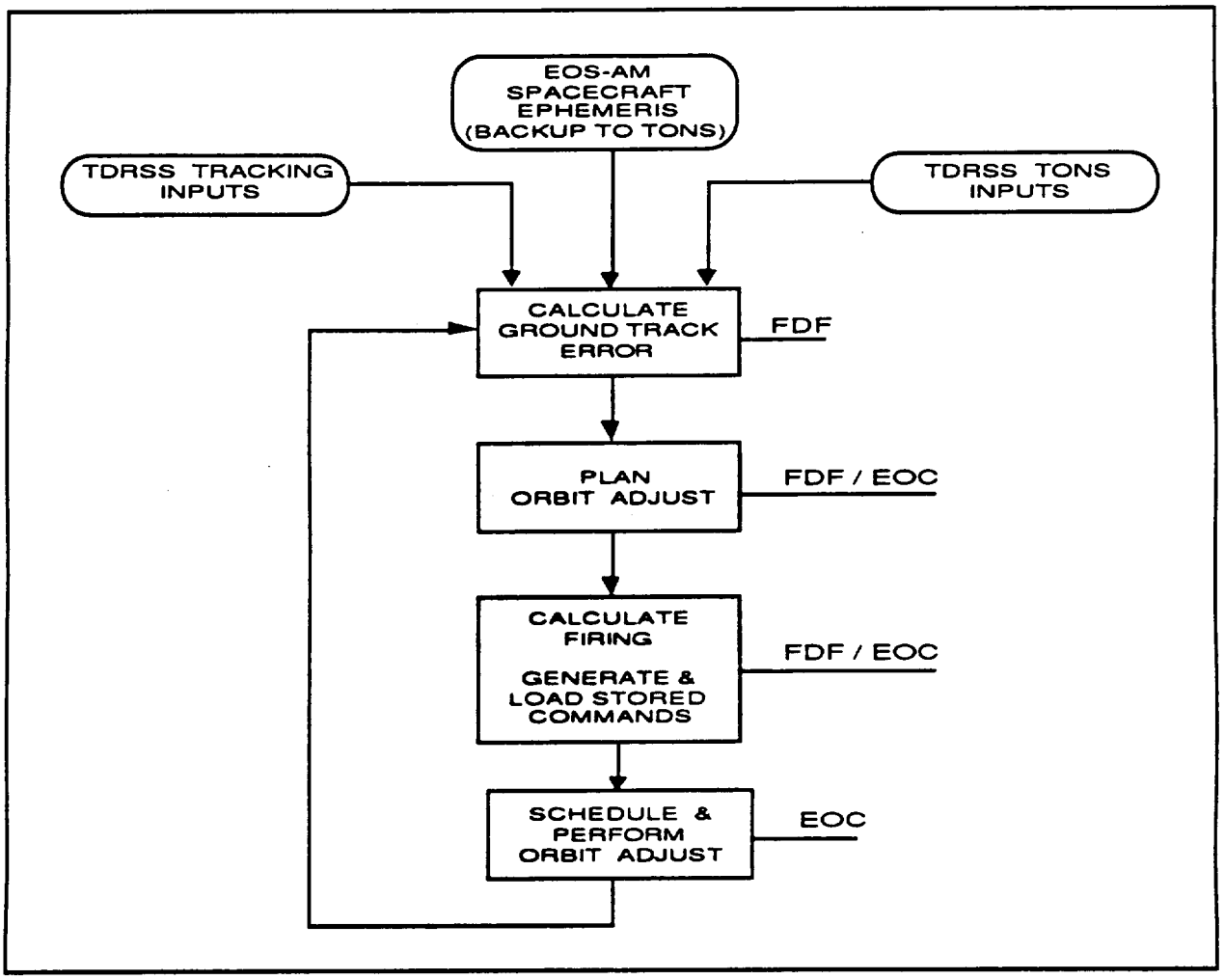

FIGURE 17 ORBIT MAINTENANCE SCENARIO

4.1.9 Autonomous Operations

The Spacecraft Fault Detection, Isolation and Recovery (FDIR) System protects the Spacecraft Bus and instruments in the event of survival-critical failures that occur in the absence of ground command and control. To accomplish this, the FDIR system autonomously switches the Spacecraft's configuration (equipment configuration and operating mode) in response to predefined survival-critical faults to isolate faults and prevent propagation. The FDIR system resides mostly in the SCC. This system provides autonomous action only if the fault detected is time critical to Spacecraft survival.

The major Spacecraft functions assessed by the on-board FDIR system requires a Flight Operations Team response in the event of function loss. The Flight Operations Team takes predefined actions in the event a FDIR event is detected.

The Spacecraft Safe Mode or Survival Mode is entered only after unsafe conditions or pending unsafe conditions are detected by the Flight Operations Team or the Spacecraft on-board FDIR system.

The Spacecraft may autonomously transfer into Safe Mode which may involve a degraded Spacecraft operation, and may also involve interruption of stored-command execution (only in the case of SCC or CTIU/C&T Bus loss).

Safe Mode or Survival Mode recovery occurs in predefined ground command / control steps only after detailed analysis and Spacecraft subsystems checkout and Operational Readiness verification.

4.1.10 Spacecraft Bus Operating Modes

The Spacecraft Bus operating modes are defined by the minimum functional and performance capabilities that are required to satisfy mission conditions and constraints.

Transition between a primary mode and a back-up mode is initiated by either Ground Command (stored or real-time) or on-board FDIR logic. The on-board Spacecraft Bus computer [SCC] autonomously initiates a transition from a primary mode (ie; Science Mode) to a back-up mode (ie; Survival Mode) following violation of preselected FDIR criteria. Exit from a back-up mode to a functionally more capable mode is by ground command only.

Figure 18 shows the Spacecraft operating modes available during each mission phase and their status (primary availability or back-up availability).

EOS-AM1 SPACECRAFT MISSION PHASES

SPACECRAFT SYSTEM MODES	Pre-Launch	Launch / Ascent	Orbit Acquisition Initialization	Orbit Acquisition	Operational Initialization	Operational	End of Mission
Ground Test Mode	P	B					
Launch/Ascent Mode		P	P				
Standby Mode			P	P	P	B	
Science Mode					P	P	
Delta-V Mode				P	P	P	
Survival Mode		B	B	B	B	B	P
Safe Mode		B	B	B	B	B	B

LEGEND
P = PRIMARY MODE
B = BACKUP MODE

FIGURE 18 SPACECRAFT OPERATING MODES AVAILABILITY

The Spacecraft Bus system operating modes are:

a. **Ground Test Mode.** -- The Ground Test Mode is a non-flight mode, used by the Launch Operations Team, in the Pre-Launch Phase following Spacecraft to Launch Vehicle integration. During the Ground Test Mode, the Spacecraft Bus undergoes comprehensive performance testing. Instrument science will not be tested during this mode but the integrity of instrument interfaces are verified. No deployments will be performed during the pre-launch tests.

   The Spacecraft is essentially in a check-out state receiving power from the Launch Vehicle T - minus zero umbilical, at the launch pad. The Spacecraft readiness for launch is established. The batteries are charged and equipment powered, as required, for low rate telemetry and commanding. Telemetry is provided to the Ground Support Equipment via the T - minus zero umbilical Spacecraft 1 kbps health and safety telemetry will be multiplexed with the Launch Vehicle telemetry and made available via the Launch Vehicle telemetry and antenna systems after Spacecraft disconnect from the T - minus zero umbilical. The software and data tables are loaded with the appropriate parameters for Orbit Acquisition Initialization and Orbit Acquisition Phase activities.

   The Ground Test Mode is entered by ground command. The Ground Test Mode is exited into the Launch/Ascent Mode for the Launch Phase upon the Spacecraft going to internal power.

b. **Launch/Ascent Mode** -- The Launch/Ascent Mode is a primary mode in both the Launch/Ascent and Orbit Acquisition Initialization Phases. The instruments are powered off with survival heaters enabled. Housekeeping equipment is powered as required for low-rate commanding and telemetry, with survival and operational heaters enabled.

The Flight Operations Team will monitor the Spacecraft telemetry received via the launch vehicle when it becomes available. No direct Flight Operations Team command/control involvement is necessary during the Launch and Ascent, assuming nominal Spacecraft conditions and activities.

Upon detection of separation from the launch vehicle, preprogrammed logic will be activated to perform major early mission activities, including:

- An attitude maneuver to obtain an Earth-oriented attitude
- Deployment of the solar array to support the bus load and begin battery recharge
- Establishment of an S–band command/telemetry link, primarily with TDRS via the omnis
- Deployment of the High Gain Antenna
- Enable the FDIR algorithms necessary for autonomous transition to Survival Mode or Safe Mode in the event of predefined failures. These algorithms will remain enabled throughout the subsequent mission phases.

Launch/Ascent preprogrammed activities will, as a backup, accept real-time ground commanded initiation, provided that a communication link with the ground has been established.

Nominally, exit from the Launch/Ascent Mode to Standby Mode will be ground commanded when the major early mission events (e.g. earth acquisition, energy balance, High Gain Antenna deployment) have been successfully completed. If an anomaly occurs after the Spacecraft has separated from the launch vehicle, the transition from the Launch/Ascent Mode to either the Survival Mode or Safe Mode may be commanded either by autonomous on-board logic or by ground command.

c. **Standby Mode** -- Standby Mode is used during Spacecraft subsystem checkout or as a back-up to the Science Mode. Although instrument science is not supported in this mode, instrument housekeeping functions can remain operational. Services provided during the Standby Mode include:

- Full power is provided. The Spacecraft Bus maintains a positive energy balance. The Spacecraft solar array tracks the sun.

- Thermal control is provided.

- Nominal S-Band Spacecraft Bus and instrument housekeeping (16 Kb) / health and safety (1 Kb) telemetry are provided.

- Commands are processed and distributed.

- Spacecraft housekeeping, health, and safety data storage and retrieval are operational.

- The SCC is operational.

- The Spacecraft Guidance and Navigation functions operate nominally, providing Earth-pointing (precision if transition is from Science Mode). The TONS system is operational with the Spacecraft ephemeris loaded as back-up.

d. **Science Mode** -- The Science Mode is the primary mode used during the Operational mission phase and during on-orbit instrument checkout. During Science Mode the Spacecraft Bus provides the full complement of resources. Services provided during the Science Mode include:

- Full power is provided. The spacecraft Bus maintains a positive energy balance. The solar array tracks the sun.

- S-Band Spacecraft Bus and instrument housekeeping / health and safety telemetry are provided.

- Science data transmission (real-time or playback) capability on the K-Band and Direct Access System are provided.

- Ancillary data and time-tagged navigational data functions are provided.

- Commands are processed and distributed.

- Spacecraft high rate and low rate data storage and retrieval are operational.

- The SCC is operational including High Gain Antenna pointing and control.

- The Spacecraft Guidance and Navigation functions operate nominally, providing precision Earth-pointing. The TONS system is operational with the Spacecraft ephemeris loaded as back-up.

e. **Delta-V Mode** -- The Delta-V Mode is a propulsive mode used to raise Spacecraft altitude from the injection orbit to mission operational altitude, circularize the mission orbit and to provide periodic correction to maintain the mission orbit. At a minimum, in the Delta-V Mode, the Spacecraft can be at survival power levels, and at a maximum, the Spacecraft can be at full power.

Best case: (Such as planned Delta-V during the Operational Phase)

- Full power is provided.
- The spacecraft Bus maintains a positive energy balance.
- The solar array tracks the sun with nominal rotation.
- Science data transmission (real-time or playback) capability on the K-Band and Direct Access System could be provided; however, fine pointing and jitter control are not supported.
- Ancillary data and time-tagged navigational data functions are provided.
- Spacecraft high rate data storage and retrieval could be operational.

Worst case: (Such as during the Orbit Acquisition Phase)

- Survival power (degraded capability).
- Commands are processed and distributed.
- S-Band Spacecraft Bus and instrument housekeeping / health and safety telemetry are provided.
- Spacecraft low rate data storage and retrieval are operational.
- The SCC is operational.
- The Spacecraft Guidance and Navigation functions operate providing Earth-pointing; however, fine pointing and jitter control are not supported. The TONS system is operational with the Spacecraft ephemeris loaded as back-up.

f. **Survival Mode** -- The Survival Mode is a minimal power or power critical mode in which only essential Spacecraft functions (i.e., low-rate commanding and telemetry, instrument survival heaters) are supported. Transition into

the Survival Mode causes non-essential housekeeping equipment to power-down.

Instruments are commanded to take action to protect themselves and establish a minimal power configuration. The Survival Mode is the primary mode for the Launch/Ascent, Orbit Acquisition Initialization, Orbit Acquisition, and End of Mission Phases. Services provided during the Survival Mode include:

- The solar array tracks the sun with nominal rotation.
- Commands are processed and distributed.
- S-Band Spacecraft Bus and instrument housekeeping / health and safety telemetry are provided.
- Spacecraft critical health and safety data storage and retrieval are operational.
- The SCC is operational. (Best case)
- The Spacecraft Guidance and Navigation functions operate nominally, providing Earth-pointing. The TONS system is operational with the Spacecraft ephemeris loaded as back-up.

g. **Safe Mode** -- The Safe Mode is a state in which the Spacecraft Bus is capable of operating partially or completely independent of the SCC. Specifically, the Spacecraft Bus operates in the Safe Mode as long as the Attitude Control Electronics (ACE) performs the attitude control functions.

Safe Mode can be entered via ground command by the Flight Operations Team. Safe Mode is entered autonomously under two circumstances. The first is the loss of SCC - I'm OK - signal and the second is due to GN&C FDIR action. Autonomous Spacecraft entrance into the Safe Mode due to GN&C FDIR occurs if the GN&C FDIR detects an attitude error beyond a given threshold and attitude control is switched to the ACE. Services provided during the Safe Mode include:

Best case:

- Full power is provided The spacecraft Bus maintains a positive energy balance. The solar array tracks the sun with nominal rotation.

- Commands are processed and distributed.
- S-Band Spacecraft Bus and instrument housekeeping / health and safety telemetry are provided.
- Science data transmission (real-time or playback) capability on the K-Band and Direct Access System is provided.
- Ancillary data and time-tagged navigational data functions are provided.
- Spacecraft low rate and high rate data storage and retrieval are operational.
- The SCC is operational.
- The Spacecraft Guidance and Navigation functions operate safely Earth pointing with degraded pointing accuracy. The TONS system is operational with the Spacecraft ephemeris loaded as back-up.
- Earth Pointing

Worst case:

- Power for survival equipment and instruments
- No command / telemetry until the FOT re-establishes these functions [Command and Telemetry Interface Unit (CTIU) failure scenario].
- SCC non-functional. No SCC services.
- Sun pointing
- Thruster based attitude control.

4.1.11 Spacecraft Bus - Instrument Operating Modes Relationships

The Spacecraft Bus operating modes and ASTER operating modes are directly interrelated. The Spacecraft Bus provides predefined services and resources for each of its operating modes. ASTER operates to predefined tasks for each of its operating modes.

Table III relates ASTER operating modes and the Spacecraft Bus operating modes.

TABLE III
SPACECRAFT BUS AND ASTER OPERATING MODES

SPACECRAFT SYSTEM MODE	ASTER INSTRUMENT MODE										
	All Off	Launch	Launch lock Off	Standby 1	Standby 2	Observations Full VNIR V/Stereo TIR SWIR & TIR	Pointing	Calibration	Safe	Survival	Others • Cool-Down • Prep 1 • Prep 2 • TIR Getter • TIR Down
Ground Test		X									
Launch/Ascent		X									
Standby				X							
Science			X	X	X	X	X	X			X
Delta–V				X					X	X	
Survival										X	
Safe									X	X	

LEGEND

X = Normal Configuration

See Appendix VII (Section 70) for Details.

4.2 Ground System

The EOS ground system provides the earth sciences community with a variety of data products obtained from the Earth Observing System spacecrafts. Data archiving, distribution and user interface capabilities are provided. The ground system also supports the command and control of the EOS-AM Spacecraft.

EOS-AM flight operations utilizes several NASA institutional support facilities along with dedicated EOS facilities. These include the following:

4.2.1 Space Network

The Space Network (SN) is the primary data transport system for relaying data between the EOS-AM Spacecraft and the ground, and provides communication resource scheduling support to EOSDIS. The SN elements together provide the communications path between the Spacecraft communications subsystem and the EOS Data and Operations System (EDOS). The SN has two parts:

a. **The Tracking and Data Relay Satellite System (TDRSS).** TDRSS comprises the Tracking and Data Relay Satellites [TDRS(s)], the White Sands Ground Terminal (WSGT), and the Second TDRS Ground Terminal (STGT), also located at White Sands.

b. **The Network Control Center (NCC) at the Goddard Space Flight Center (GSFC).** The NCC is the operations center for all SN activities. It provides operational management of all elements of the SN and is responsible for all scheduling activities for the TDRS(s) and ground terminals. The EOC interfaces with NCC for scheduling SN resources. The NCC implements operations, executes schedules, and performs link monitoring and fault isolation.

Figure 19 depicts a top level view of the Space Network scheduling process.

The nominal plan for TDRSS support calls for two 10 minutes contacts per EOS-AM orbit. The requirement for support is submitted with the specific timing of support services left to be scheduled by the NCC. A forecast schedule of TDRSS support intervals is released by the NCC approximately one-two weeks beforehand. Contingency/emergency support arrangements can be made with 10 minutes advance notice.

Figure 20 shows a timeline of Space Network and EOC scheduling activities during a normal forecast scheduling period and an active scheduling period.

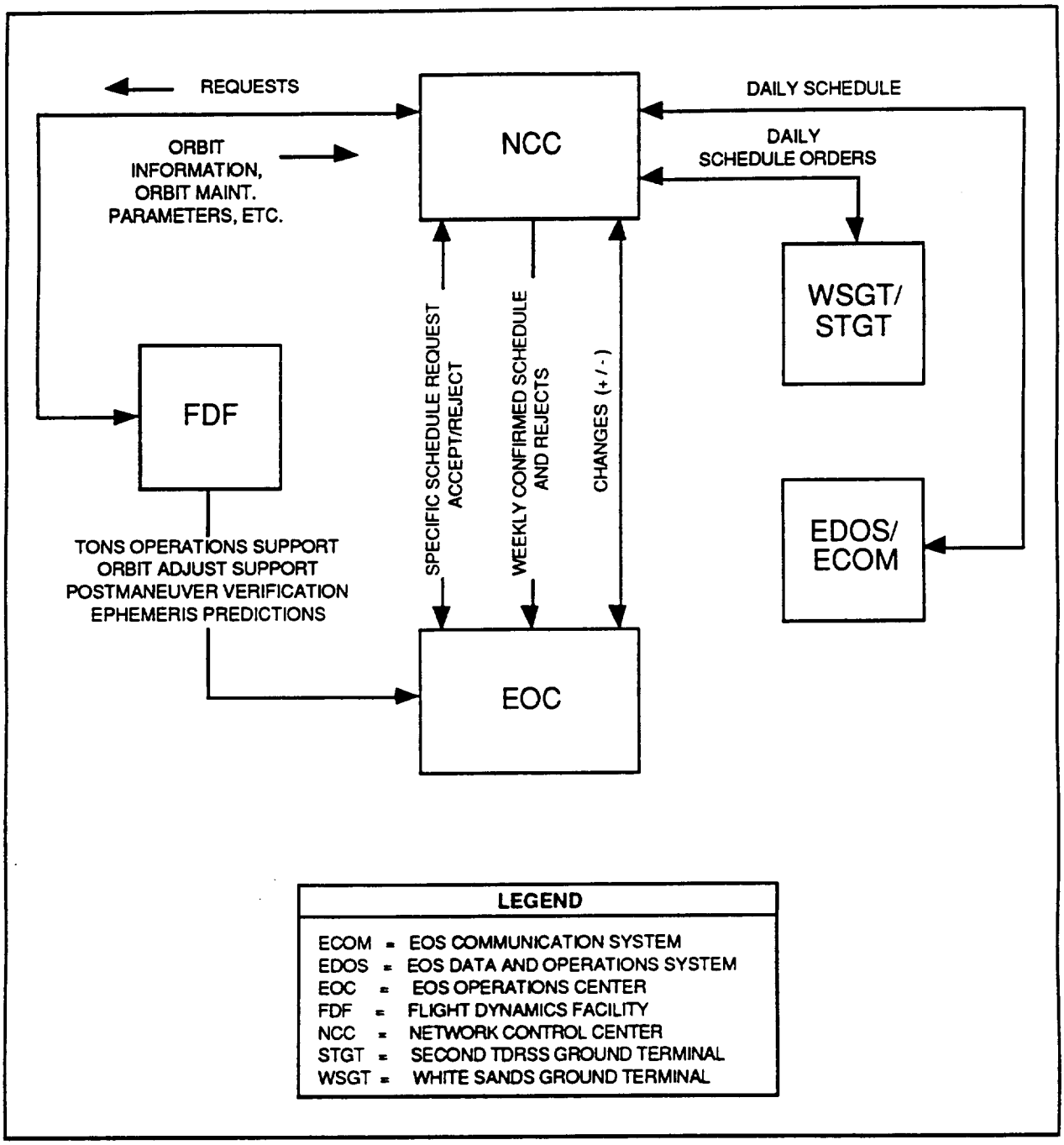

FIGURE 19 TOP LEVEL SPACE NETWORK SCHEDULING PROCESS

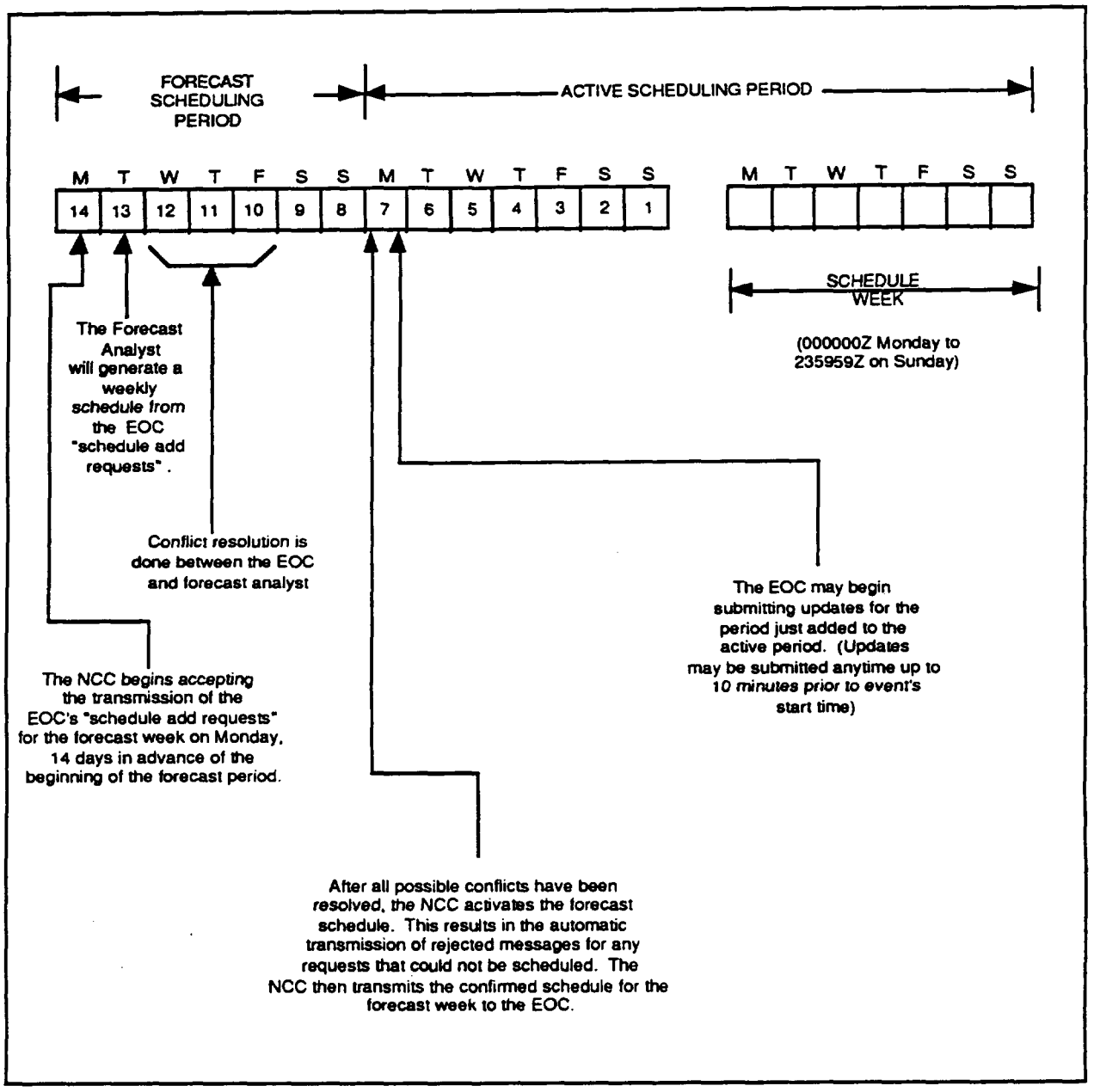

FIGURE 20 EOC / SPACE NETWORK SCHEDULING TIMELINE

4.2.2 Flight Dynamics Facility

The Flight Dynamics Facility (FDF) is an institutional facility located at GSFC that provides orbit, attitude, and navigation computational services in support of flight projects. Prelaunch services include mission design analysis, trajectory analysis, sensor analysis, and operations planning. Operational support services include orbit and attitude determination, anomaly resolution, orbit adjustment planning and maneuver support, sensor calibration, post mission velocity analysis, and generation of planning and scheduling data products.

The FDF provides operational support to the EOS-AM Spacecraft. The FDF interacts directly with the EOC to provide TONS operations support, orbit adjustment

support, and post maneuver verification of spacecraft parameters. In addition, FDF provides the EOC with TDRS and EOS-AM Spacecraft ephemeris loads and predictions for planning and scheduling support.

The FDF routinely provides predicted orbit information for use in flight operations and definitive data for scientific data processing (when requested). The FDF generates planning aid data to support both long and short term operational planning activities and for use in command generation processing. Performance monitoring data is extracted from planning aid data sets, or generated separately; this data is provided to the EOC for use in verifying proper Spacecraft operation during real-time contact intervals. The FDF operates seven days per week to generate predictive orbit data for use in daily command generation processing. The short-term planning aid data used in daily planning activities is generated/updated TBD, while long term planning aid generation is scheduled to support specific long term planning activities whenever they occur.

4.2.3 NASA Communication Network

Together with the EOS Communications Network (ECOM) (Section 4.2.6.2), NASA Communication Network (NASCOM) provides the set of circuits, switching, and terminal facilities for operational telecommunications support of the EOS project. Both networks provide a high level of security for the command, telemetry, and other information directly related to the spacecraft operations that they support. NASCOM provides the communications between the Earth Science Data Information System (ESDIS) and the NCC (and possibly other institutional systems), either directly or via ECOM gateways.

4.2.4 Science Support Networks

Other NASA networks that support EOS science communications include the Program Support Communications Network (PSCN) and the NASA Science Internet (NSI):

a. The PSCN provides programmatic and administrative data communication services between NASA Headquarters, NASA centers, and other users. The PSCN Control Center, located at Marshall Space Flight Center (MSFC), has overall responsibility for scheduling, software development, maintenance, and monitoring of the PSCN.

b. The NSI is a multi-discipline and multi-project network that is operated by the NSI Project Office at NASA's Ames Research Center (ARC). NSI provides

data access and interchange among a wide variety of NASA science disciplines. It provides direct user access to several disciplines supported by ESDIS and gateways to other networks that will be part of the ESDIS Science Network (ESN).

4.2.5 Alternate Space/Ground Links

In the event that the Spacecraft is unable to communicate through TDRSS, NASA ground stations link the Spacecraft with the EOC for housekeeping and health and safety data. The ground stations include the following:

a. Deep Space Network (DSN).
b. Ground Network (GN).
c. Wallops Orbital Tracking Station (WOTS).

4.2.6 Earth Observing System Data and Information System

The Earth Observing System Data and Information System (EOSDIS) ground system consists of EDOS, ECOM, and ECS.

4.2.6.1 EOS Data and Operations System

The EOS Data and Operations System (EDOS) is a component of the EOS Ground System which provides an interface between the White Sands Ground Terminals and other EOS Ground Systems like the EOC, ASTER Instrument Control Center (ICC), PGS and ADADS, and the DAACs. The interface between EDOS and the DSN, GN, WOTS, and Direct Playback stations is TBD.

EDOS processes data which conforms to the CCSDS recommendations.

For telecommand services, EDOS provides an asynchronous interface with the EOC, and ASTER ICC while providing a synchronous interface with the White Sands Ground Terminal. EDOS receives CCSDS Command Link Transmission Units (CLTUs) from the EOC and provides the CCSDS protocol for transmission of the data to the White Sands Ground Terminals.

For telemetry services, EDOS provides several data processing functions:

a) For data requiring real-time transmission (i.e., real-time housekeeping data to the EOC), EDOS extracts packets from the S-band downlink and transmits the packets to EOC and ASTER ICC with a minimum of delay at the rate received. In addition, EDOS provides a time tagging function which will allow for accurate spacecraft time determination.

b) EOS-AM data transmitted via the high-rate science link (i.e., the K-band link), undergoes level zero production data processing at EDOS. Playback data is forward ordered if necessary, and data sets are generated which contain time ordered packets (all with the same APID) with quality and accounting information appended. The size of the data sets generated is predetermined, so one data set may contain data from one or more TDRSS contacts. Overlap between TDRSS contacts is eliminated where it occurs.

   Level zero processed data sets are available for delivery to destinations within 24 hours of receipt of all the required data.

c) Up to 5% of the total data may receive quick-look processing at EDOS. Quick-look processing is a means of delivering science/engineering data to a destination within approximately one hour of its receipt at EDOS. Any data included in a quick-look processed data set is also included in a routine level zero production processed data set. Quick-look processed data sets are limited to data received during a single TDRSS contact. The data in a quick-look processed data set may include all of the data associated with the specified APID received during the TDRSS session or only those packets for the specified APID that have a special secondary header flag set (quick look flag).

d) Another EDOS processing option is rate buffering. This option is intended to capture downlink data at a high data rate and deliver that data to a destination at a different, lower data rate with minimal processing delays.

   Rate buffered data sets are files of packets for a single APID with limited quality and accounting information appended.

EDOS provides an interface to the EOC, ASTER ICC, and DAACs for realtime spacecraft monitoring, data accounting, fault isolation, and configuration management.

4.2.6.2 EOS Communication Network

The EOS Communication Network (ECOM) is a facility system that supplies supporting services to EOSDIS. ECOM provides the set of circuits, switching, and terminal facilities for operational telecommunications support specific to the EOS project. Together with NASCOM, ECOM provides a high level of security for the command, telemetry, and other information directly related to the Spacecraft operations. ECOM provides the data transport path from the EDOS elements to various other elements of EOSDIS, including the EOC and ASTER ICC. ECOM supports a variety of bandwidths and uses state-of-the art communications methods, including fiber optics and domestic communications satellites.

4.2.6.3 EOSDIS Core System

The EOSDIS Core System (ECS) has the following three segments:

a. The Flight Operations Segment.
b. The Science Data Processing Segment.
c. The Communication and System Management Segment.

4.2.6.3.1 Flight Operations Segment

The Flight Operations Segment (FOS) manages and controls the EOS-AM Spacecraft and its instruments.

The FOS comprises the following three basic elements:

a. **The EOS Operations Center**

The EOS Operations Center (EOC) facility serves as the focal point for EOS-AM Spacecraft real-time flight operations. The EOC will be located at GSFC. Figure 21 shows the EOC staffing structure and relationships with other EOS-AM Project related entities.

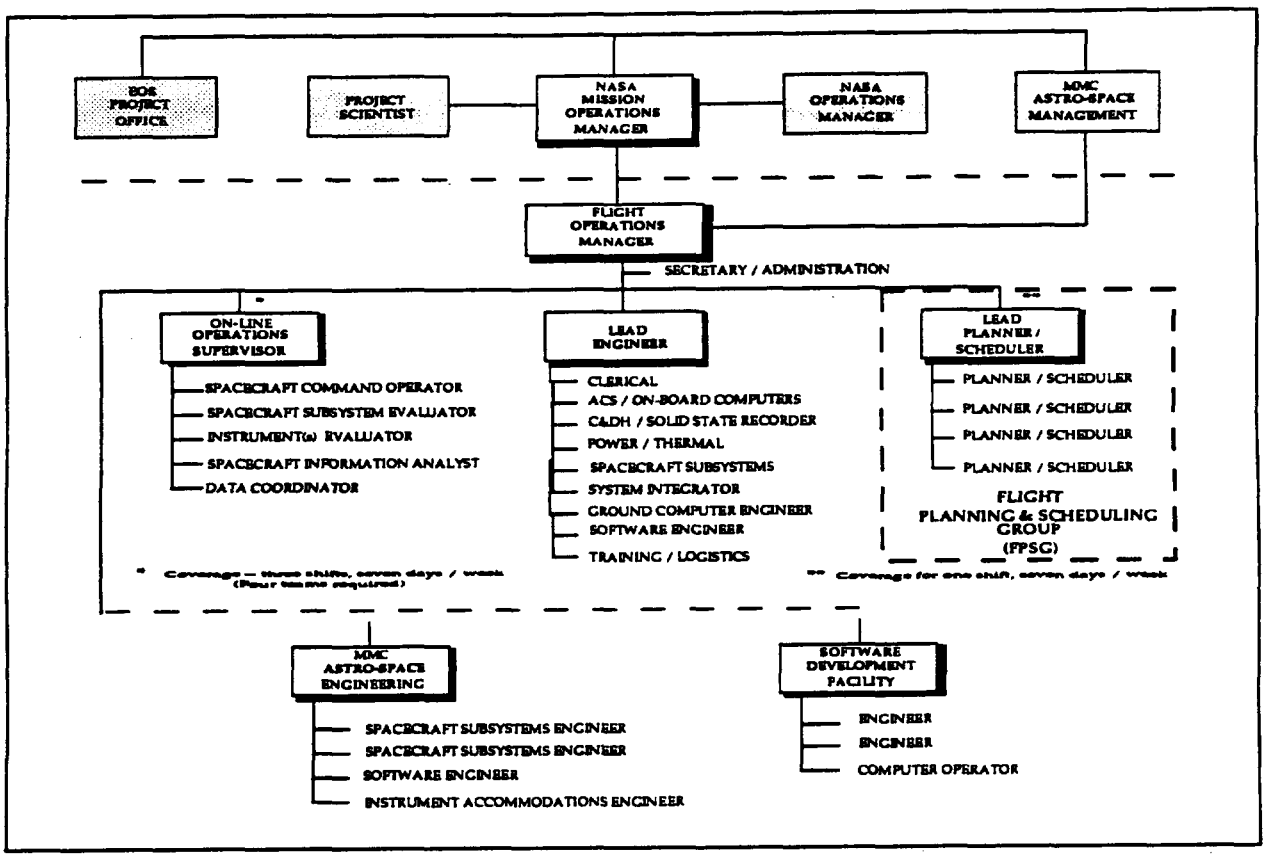

FIGURE 21 EOC STAFFING STRUCTURE

The flight operations elements responsible for the health and safety of the Spacecraft are located at the EOC. The FOT performs the detailed flight operations planning and scheduling, command, control, and real-time monitoring of the Spacecraft. The spacecraft engineering group, located at the EOC, is responsible for detailed Spacecraft performance analysis and produces periodic spacecraft subsystem performance reports.

Housekeeping, engineering, and instrument quick-look processed science data are also analyzed to support flight operations and to support Spacecraft and instrument engineering.

The FOT coordinates ASTER operations with the Spacecraft and other instruments. Working with the ASTER ICC/TL via the Instrument Support Terminal(s), the FOT plans and schedules the ASTER and Spacecraft operations.

The EOS-AM spacecraft contractor provides a spacecraft simulator, which is a hybrid of the Spacecraft Bus Command and Data Handling (C&DH) subsystem and special simulation software. This simulator supports ground tests and training. The simulator will be located at the EOC.

Specific EOC command and telemetry database requirements for the ASTER instrument are defined in Appendix II and Appendix III, respectively.

Specific requirements for EOC computer processing of ASTER telemetry data are defined in Appendix III.

Specific requirements for ASTER uplink transmissions are defined in Appendix II, while ASTER uplink verification requirements are included within Appendix III.

4.2.6.3.2 Science Data Processing Segment

The Science Data Processing Segment (SDPS) provides processing and distribution for science data and a data information system for EOSDIS. It consists of the following three kinds of elements:

a. The Distributed Active Archive Centers (DAACs) -- The DAACs will process data from the instruments to standard level 1-4 products, provide short- and long-term storage for EOS and selected non-EOS data, and distribute the data to users. Each is composed of a Product Generation System (PGS), a Data Archive and Distribution System (DADS), and a portion of the distributed Information Management System. Several DAACs are distributed around the United States.

b. The Information Management System (IMS) -- The IMS is a distributed data and information management service that includes a catalog system in support of user data selection and ordering. The IMS is distributed but will function as a single integrated information and data management service from the point of view of the user. The IMS therefore presents the same comprehensive view of the EOSDIS from any IMS access node.

c. The Science Computing Facilities (SCFs) -- SCFs are located at science investigator sites and are used to develop and maintain algorithms, produce data sets, validate data and data products, and analyze and synthesize EOS and other data to expand knowledge about the Earth system and its components.

The SDPS performs the EOSDIS functions of processing and archiving data from the EOS instruments and data from other earth science projects.

4.2.6.3.3 Communication and System Management Segment

The Communication and System Management Segment (CSMS) provides communications, networking, system-wide network management, and site/element operations management. This segment contains the following two elements:

a. The System Management Center (SMC) -- A system management service for EOSDIS ground system resources.

b. The EOSDIS Science Network (ESN) -- A communications network and services providing for the electronic distribution of data among the DAACs, SCFs, and other related science facilities.

The CSMS performs the EOSDIS functions of providing access to and distribution of EOS data products, networking capabilities, and the exchange of items such as data and algorithms.

4.2.7 Japanese Elements of the ASTER Ground System

This section provides an overview of the Japanese elements of the ASTER ground system called hereinafter ASTER Ground Data System (ASTER GDS). detailed description of the ASTER GDS elements, and the system operation concept.

4.2.7.1 ASTER Ground Data System Overview

ASTER GDS has been defined as a hierarchy of segments, subsystems, and components. Three ASTER GDS segments are defined to support three major operational areas: ASTER Operation Segment (AOS), Communication and System Management Segment (CSMS), and Science Data Processing Segment (SDPS). The segments are further divided into ASTER GDS functional elements to provide the support required by the operational segments. Figure 22 illustrates the ASTER GDS; its major elements are described briefly below.

The ASTER Operations Segment (AOS) manages ASTER instrument operations and controls the ASTER instrument through the EOC. The AOS elements are the Instrument Control Subsystem, including the Instrument Control Operation Subsystem and the Instrument Analysis Support Subsystem, and the Instrument Support Terminal (IST). The ICC is responsible for the operations of the ASTER instrument, it performs planning, scheduling, commanding, and monitoring. IST is defined as a facility that connects the ASTER Science Team Leader to ICC in support of instrument operation.

The Communications and System Management Segment (CSMS) provides system resource management, communications services, and a data information system for the entire ASTER Project. CSMS includes the Ground System Management Subsystem (GSMS), the ASTER Data Network (ADN) including the ASTER Japanese gateway. The GSMS provides system management services for the ASTER GDS elements; plus coordination of ground system operations within and between these elements. The ADN provides an internal network for communications among the ASTER GDS elements, a network interface to the science user network, network services at the application layer (TBR) and a network management facility.

The Science Data Processing Segment (SDPS) provides a set of processing and distribution elements for ASTER science data, a direct receiving element for ASTER raw data, and a software implementation system for the entire PGS. The SDPS elements include Product Generation Subsystem (PGS) consisting of Data Processing Subsystem (DPS), Data Analysis Subsystem (DAS) and other subsystems. Information Management Subsystem (IMS), Direct Receiving Subsystem (DRS), ASTER Data Archive and Distribution Subsystem (ADADS), and Software Implementation Support Subsystem (SISS).

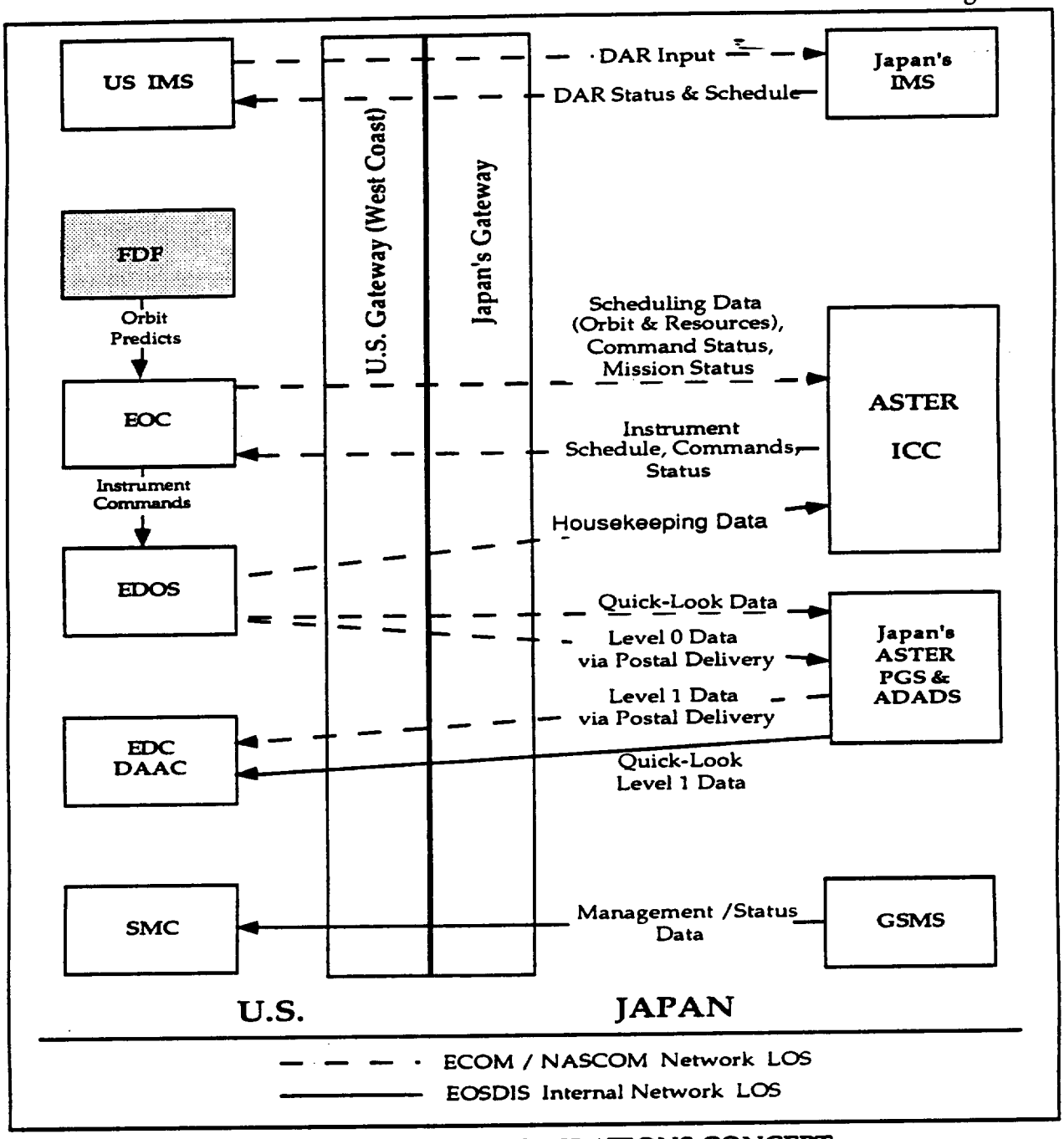

FIGURE 22 ASTER OPERATIONS CONCEPT

For ASTER, PGS and ADADS facilities process the data from Level 0 data up to standard higher data products, provide short- and long- term storage for ASTER project, and distribute the data to users. IMS provides a data and information management service including a catalog system in support of user data selection and ordering.

4.2.7.2 Japanese Elements of the ASTER Ground System

The specific ASTER GDS elements are illustrated, along with their interfaces, in Figure 22. Descriptions of these elements are provided below.

The ASTER Data Archive and Distribution Subsystem (ADADS) is responsible for archiving and distributing ASTER data. This includes Level 1 and higher level data products, ancillary and correlative data, metadata, command histories, algorithms, and documentation. Data will be distributed from ADADS to EDC DAAC, EOS scientists, other researchers and commercial users.

The ASTER Instrument Control Center (ICC) plans and schedules instrument operations, generates and validates command sequences, monitors the health and safety of the ASTER instrument, and provides Japan's IST and Japan's IMS with ASTER instrument and EOS-AM1 Spacecraft status information.

The Japan's Information Management Subsystem (IMS) is the user interface for ASTER GDS and EOSDIS. The IMS provides information about data archived in ASTER GDS and EOSDIS archives, on a 24- hour basis; accepts user orders for ASTER data; provides information about future data acquisition and processing schedules; accepts and forwards data acquisition and product requests; and maintains information on system status. management. and coordination. Users accessing the U.S. IMS from Japan's ASTER IMS will see the same comprehensive "Earth science" view of the overall EOSDIS database. The IMS will also perform the functions required for constructing user Data Acquisition Requests (DARs) for ASTER and other instruments, forwarding the ASTER DAR status and schedule, and the non-ASTER DARs to the U.S. IMS. The IMS will obtain DAR status and schedule information concerning with other instruments from the U.S, IMS, and will provide DAR status information to users.

The Japan's Instrument Support Terminal (IST) resides at the home institution (to be reviewed) of the ASTER Science Team Leader. The Japan's ASTER IST provides mechanisms for evaluating the agreement between the DAR schedule and ASTER science goals, for performing studies to determine the effect of changing guidelines on the ASTER schedule, and for communicating with U.S. members of the ASTER Science Team via the U.S. ASTER IST on the ASTER schedule. The Japan's IST has the capability to monitor the ASTER instrument and the EOS-AM1 Spacecraft status information.

The Ground System Management Subsystem (GSMS) performs system management services in coordination with other ASTER GDS segments and subsystems, yielding a "system-wide view" of ASTER GDS operations. GSMS services include schedule coordination, status monitoring, performance and coordination management, fault and security management, user authorization, and accounting. GSMS exchanges management and status information with U.S. SMC for the purpose of coordinating ground operations.

The Japan's ASTER PGS performs data processing functions. routine generation of Level 1 and standard higher products, scientific quick look products, metadata, and browse data sets.

5 FUNCTIONAL RESPONSIBILITY ALLOCATIONS

The allocations of responsibility for performing various operational functions in support of ASTER flight operations are understood to be as follows:

5.1 Planning and Scheduling

Planning and scheduling has the objective of producing a detailed schedule for the activities of the EOS-AM Spacecraft (Spacecraft Bus and AM Instrument Set). The Flight Planning and Scheduling Group (FPSG), a segment of the FOT, is responsible for producing the integrated Spacecraft detailed activity schedule.

The planning and scheduling process includes the following phases:

a. **A long-term mission planning phase.**
Long-term mission planning begins up to 5 years before the activities being planned. This phase includes the Investigator Working Group efforts that produce or update the Long-Term Science Plan (LTSP) and Long-Term Instrument Plans (LTIPs).

b. **An initial scheduling phase.**
Initial scheduling, whose primary objective is to secure the SN resources for flight operations for the target week, begins about 3 weeks before the target week.

c. **A final scheduling phase.**
Final scheduling produces a detailed activity schedule for the Spacecraft Bus and the instruments. This schedule forms a basis for commanding the Spacecraft. Targets of Opportunity or anomalies may interrupt the scheduled operations, requiring rapid rescheduling or the generation of commands for unscheduled activities.

All of the EOC planning and scheduling information is available to the ASTER ICC to assist it during all phases. This information includes the plans (e.g., LTSP, LTIPs, and long-term spacecraft operations plan), orbit information (e.g., scheduling aids from the FDF), the TDRSS schedule, the initial schedule, and the detailed activity schedule.

5.1.1 Long Term Planning

The science community develops long term plans that serve as an input into the operations planning and scheduling. The project scientist produces, with the Investigator Working Group (IWG) recommendations, a LTSP for the Spacecraft. The PIs/TLs produce LTIPs for their respective instruments.

The IWG recommends guidelines and overall science objectives to the Project Scientist, who defines policy. The IWG has representatives from each of the

instruments. The IWG meets regularly, at least every 6 months (usually every three months). The LTSP presents science objectives for the Spacecraft, establishes science mission priorities to be used in later scheduling, and recommends approaches for satisfying scientific objectives. The LTSP also defines special events and specifies requirements for coordination between instruments.

The ASTER TL has responsibility for the ASTER LTIP. The ASTER LTIP includes information on science priorities, guidelines for DAR evaluations, Target of Opportunity classifications, long term goals for ASTER data collection, and identification of calibration activities.

The FPSG has the responsibility for Spacecraft planning. Some of the Spacecraft Bus subsystem activities that the FPSG manages are directly related to science and to Spacecraft Bus subsystem operations; these include the power, command and data handling, and communications subsystems. Others support Spacecraft maintenance, including orbit maintenance. The FPSG formulates long-term spacecraft operations plans and keeps the IWG and the ASTER ICC informed of changes in Spacecraft operations, including predicted frequencies in which science operations are affected for maintenance.

The long term planning information in the EOC is available to the ASTER ICC to support its planning and scheduling. This information includes the LTSP, the LTIPs of all of the instruments, predicted orbit information, planned spacecraft events, such as orbit maneuvers, and the operations plans of other instruments.

5.1.2 Initial Scheduling

[Note: This section assumes that the solid state recorder capacity is a constraint on ASTER operations (140 GBits). If the capacity increases, the involvement of the ASTER ICC in the initial scheduling phase can be reduced.]

The ASTER ICC is responsible for scheduling the ASTER science operations based on Data Acquisition Requests (DARs) from authorized investigators. The DARs are submitted to the IMS or the Japanese equivalent and sent to the ASTER ICC. The ASTER ICC evaluates the DARs using guidelines and, if needed, assistance from the ASTER Science Team. The accepted DARs, the science priorities, the instrument constraints, and other information (such as percent of ground track over land and seasonal cloud cover predictions) are used to develop an initial ASTER activity schedule.

Initial scheduling by the FPSG in the EOC has the objectives of securing the required SN resources from the NCC. Each week, the ASTER ICC provides the FPSG with the initial schedule of ASTER activities, including a data rate profile, for the target week about 3 weeks before the target week. The FPSG identifies the SN resources required for Spacecraft Bus subsystem operations (e.g., TONS operations, orbit adjustment operations) and for the operation of the other instruments, based on their baseline activity profiles and activity deviation lists (if any). The FPSG estimates on-board Solid State Recorder usage and SN resource needs and develops a TDRSS schedule request. The FPSG sends it to the NCC, about 2 weeks before the target week. For about a week after the submission of this TDRSS schedule request, the FPSG can negotiate with the NCC for the best SN resource allocations. A week before the target week, the NCC provides the active TDRSS schedule to the FPSG.

On the basis of the TDRSS schedule, the Spacecraft Bus activities required and instrument activities, the FPSG is responsible for developing a preliminary Spacecraft activity schedule, which it makes available to all instruments. This preliminary spacecraft activity schedule includes an allocation of data storage capacity to ASTER based on the TDRSS schedule. In addition, the ASTER ICC has access to available scheduling information from the EOC. This global information includes the plans (e.g., LTSP, LTIPs, and long-term Spacecraft operations plan), orbit information (e.g., scheduling aids from the FDF), a TDRSS schedule for the target week, and the most current preliminary Spacecraft activity schedule.

5.1.3 Daily Planning and Scheduling

The FPSG is responsible for overall coordination of daily Spacecraft operations planning and scheduling activities. The ASTER ICC is responsible for scheduling the ASTER activities consistent with the spacecraft schedule.

Final scheduling has the objective of producing for the Spacecraft a detailed activity schedule on which commanding will be based. Final scheduling is based on the preliminary activity schedule and any new input that has been accepted since the preliminary activity schedule was developed.

The ASTER ICC may modify the initial ASTER activity schedule to accommodate changes due to DARs received since the initial schedule was developed, the success or failure of previously scheduled DARs, changes in the science priorities, and so on, as long as the new schedule of activities fits within the data storage capacity allocated by the FPSG during initial scheduling. The ASTER ICC, with the assistance of the ASTER Science Team, develops a final schedule for ASTER that is internally conflict free and includes science observations and calibration activities. The schedule includes information on whether the observation data should be flagged as quick look data and whether it is to be sent to a ground station using the direct downlink service. The ASTER ICC submits this final activity schedule to the FPSG for each day about three days ahead of the execution of the scheduled activities.

For the other instruments, the FPSG combines the activity deviation lists, if any, with the corresponding baseline activity profiles to produce instrument activity lists. The FPSG develops the Spacecraft subsystem activity list. The FPSG combines the spacecraft subsystem activity list, the ASTER instrument activity list from the ASTER ICC, and the instrument activity lists of the other instruments into a detailed activity schedule.

As in initial scheduling, the ASTER ICC can access scheduling information from the EOC.

Scheduling conflict resolution (e.g., jitter from ASTER telescope repointing) is TBD.

5.1.4 Planning Aids

Planning aids which pertain to long-term and daily flight planning activities are generated by the EOC and FDF, and are available to the ASTER ICC.

The planning aid access details are TBD.

5.2 Uplink Generation

The uplink generation process translates the Spacecraft detailed activity schedule, and other information to be stored onboard into Spacecraft command loads ready for uplink transmission. This process is performed using TBD procedures. The ASTER ICC is responsible for specifying the commands which are used to implement planned instrument operations. The FPSG is responsible for generating control sequences which are used to implement planned Spacecraft Bus operations, including those spacecraft system operations that directly associated with ASTER operations (e.g., commands to the Direct Access System to implement direct downlink operations). The ASTER ICC is responsible for ensuring that the ASTER commands in the command database at the EOC are current and correct.

The ASTER ICC is responsible for defining ASTER constraint checks, constraint violation resolution ground rules, and for performing these checks on ASTER sequences. Specific constraint check requirements for ASTER are defined in Appendix II. The ASTER ICC submits the commands in mnemonic form to the FPSG about 2 days ahead of their execution. The FPSG uses the ASTER ICC supplied data base information to convert the commands to bits to be uplinked. The FPSG uses information in the data base to derive an estimate of the resource used by the commands. This information is provided to the ASTER ICC as a consistency check on the commands. The ASTER ICC may also review the resulting command load.

The FPSG is responsible for coordinating the processing of spacecraft and instrument commands into uplink loads. Normally, commands for a day's operation are loaded once per day. In the event that the load of stored commands exceeds the onboard memory, the day's commands are split into two loads.

Spacecraft commanding (real-time uplink commands, real-time commands to the SCC, and stored SCC commands) has the purpose of directing the spacecraft and instruments to perform the activities as scheduled or as needed. This function has the following three major activities:

a. Normal commanding, which implements the Spacecraft Bus and instrument activities that have been specified in the spacecraft detailed activity schedule.

b. Implementation of late changes to the scheduled course of activities as necessitated by late changes to the Spacecraft detailed activity schedule.

c. Emergency/contingency commanding required for safe operations of the Spacecraft Bus and instruments.

Command associated activities also involve command data validation, command verification, onboard memory management, and command history maintenance.

Stored SCC commands generated for ASTER are typically composed of absolute time commands and Relative Time Command Sequence (RTCS) commands. An absolute time command has associated with it a well-defined execution time. A RTCS is a group of commands that can be initiated by an absolute time command, onboard fault management, or a real time command to perform a frequently performed function. The use of RTCS commands can reduce the amount of stored command memory required for normal operations.

The FOT is responsible for uplinking scheduled ASTER command loads. The FOT provides the ASTER ICC with confirmation that the loads has been successfully uplinked to the SCC stored command memory.

The FOT is responsible for generating, validating, deconflicting, and maintaining the command data for the Spacecraft Bus subsystems. The SCC software is the responsibility of the Spacecraft Bus contractor. The FDF provides the FPSG with required parameters for TONS operations and orbit adjustment operations. The FPSG incorporates the appropriate parameters into SCC-stored commands and SCC-stored Spacecraft tables.

5.3 Real-Time Operations

The Flight Operations Team is responsible for all aspects of real-time contact with the Spacecraft. The FOT, using EOC resources, is responsible for processing real-time telemetry data to:

a. Determine the status of various Spacecraft systems.

b. Monitor the health and safety of Spacecraft Bus subsystems and the non-ASTER EOS AM instruments.

c. Monitor ASTER's interaction with the rest of the spacecraft and provide limited health and safety functions for ASTER under certain circumstances.

d. Generate displays for use by the FOT.

The ASTER ICC is responsible for monitoring the health and safety and performance of ASTER. The ASTER ICC receives real time housekeeping data directly from EDOS and quick look data of recorded housekeeping data via Japan's PGS & ADADS from EDOS if necessary. Data quality and accounting information is provided with both data types. The ASTER ICC works with EDOS to coordinate the specification of the data delivery and to resolve and data communication problems. ASTER ICC processes ASTER housekeeping data and selected spacecraft housekeeping data that are relevant to the health and safety of ASTER.

The FOT is also responsible for transmitting all real-time commands, for transmitting the stored command loads, and for verifying all uplink transmissions. Normally, all ASTER operations are performed using stored commands. However, during initial instrument activation and anomalies, real time commanding is expected. Real time commanding requires coordination between the FOT and the ASTER ICC to ensure that the ASTER ICC can perform the health and safety functions for the instrument without compromising the FOT's responsibility for the spacecraft and other instruments. Real time commands from the ASTER ICC are sent as mnemonics, which the EOC converts to uplink bits using the ASTER ICC supplied data base. Some commands that are defined by the data base as critical require authorization by the FOT prior to uplink. The EOC provides the ASTER ICC with the verification that the commands were received by the spacecraft. Specific uplink verification requirements for ASTER are defined in Appendix III.

The FOT is responsible for implementing the daily Spacecraft operations schedule under normal circumstances, and for taking appropriate action to preserve Spacecraft health and safety. The FOT is capable of initiating a predefined ASTER safing command sequence in the event that it detects a problem with ASTER or the spacecraft. The FOT is also capable of safing ASTER in the event that electronic communications with the ASTER ICC are lost while ASTER is in an unsafe or indeterminate state. The FOT immediately notifies the ASTER ICC (if possible)

when it initiates the safing command sequence. The ASTER ICC is responsible for defining health and safety monitoring and reaction procedures for ASTER, and the Flight Operations Team is responsible for implementing these procedures. Specific ASTER health and safety monitoring and action requirements by the EOC are defined in Appendix III and Appendix IV, respectively.

The ASTER ICC is also responsible for advising the FOT of any changes in ASTER operating characteristics, capability, or in plans for ASTER utilization which should be factored into any aspect of real-time operations. The FOT is responsible for advising the ASTER ICC of any departure from planned operation of the Spacecraft Bus.

5.4 Performance Verification

Verification of operational performance is required for all Spacecraft Bus subsystems and ASTER in order to maintain an up-to-date knowledge of Spacecraft operating characteristics, capabilities, and limitations. Performance verification results are used in science data analysis/evaluation and as an input to ongoing science and operational planning activities. The ASTER ICC is responsible for verifying all aspects of ASTER instrument performance including the verification of command execution by ASTER. The FOT is responsible for verifying the performance of Spacecraft Bus subsystems throughout the Spacecraft mission. The SDF at the Spacecraft contractor's facility supports the FOT in verifying Spacecraft Bus flight software performance relating to on-board operation. The ASTER ICC is responsible for ASTER performance verification requirements. The FOT and ASTER ICC are both responsible for advising the EOS-AM Science Team of all/any performance verification results which are pertinent to the planning of future mission operations.

The FOT is responsible for maintaining a log of all uplink activities, which includes for each uplink activity the command data uplinked, the start and end times, and its receipt by the C&DH. The FOT, using EOC resources, also maintains information on whether stored command data are correctly stored in the SCC memory and information on whether the SCC-stored commands are dispatched successfully to the intended destination entities. For real-time commands, the FOT maintains information regarding command execution by the Spacecraft Bus subsystems.

Similarly, the ASTER ICC is responsible for maintaining information on whether the stored or real-time instrument commands are successfully executed by ASTER (Details are TBD).

Command histories are maintained by the FOT and ASTER ICC/operations staff.

5.5 Database Maintenance

The Spacecraft SCC contains software and database information which are subject to in-orbit maintenance. The EOC computer systems contain a database which supports command generation, telemetry processing operations. The ASTER ICC contains a data base which includes the definition of the subset of spacecraft parameters that it processes. The configuration of the flight software system and database are controlled with update procedures coordinated to maintain consistency between the EOS-AM Spacecraft and ground system and between various ground system facilities.

The FOT has overall responsibility for coordinating flight software and database maintenance activities to insure system-wide consistency. The Software Development Facility (SDF) has responsibility for the Spacecraft Bus flight software.

The FOT is responsible for defining and verifying modifications for the allocation of command storage memory within the SCC, and for implementing SCC flight software and database modifications.

The FOT is responsible for maintaining all Spacecraft Bus subsystem parameters within the EOC database and for maintaining the core definitions of all individual commands within the EOC systems. The FOT is also responsible for maintaining the definition of all downlink telemetry within the EOC database for which EOC processing of any type is required. The ASTER ICC is responsible for providing to the EOC the parameter values which define all ASTER commands and those telemetry parameters that are to be monitored in the EOC. The ASTER ICC is responsible for defining all other EOC database information updates which relate to ASTER (e.g., command sequences, resource usage, safing sequences, activity definitions, telemetry calibration data, limit-check threshold levels, derived function definitions).

The EOSDIS Core System contractor is responsible for implementing the EOC database modifications. The FOT is required to remain cognizant of database content and status within the EOC. The FOT interacts with the ASTER ICC to implement any database updates which are pertinent to ASTER. The ECS contractor provides the database manager software for the EOC database.

The FOT provides database information to the ASTER ICC on the spacecraft housekeeping parameters that are processed in the ASTER ICC. The information includes format, limits, and calibration curves.

5.6 Early Orbit Operations

The early orbit operations responsibility for performing various operational functions in support of ASTER flight operations are understood to be as follows:

5.6.1 Launch - Orbit Acquisition Mission Phases

The ASTER ICC is responsible for defining any command sequences and contingency procedures which should be available at the EOC during launch through the Orbit Acquisition mission phase operations in order to assure the health and safety of ASTER. Specific ASTER requirements for pre-activation attention are defined in Appendix IV.

The launch vehicle places the Spacecraft in the injection orbit; and the Spacecraft senses separation (Spacecraft from launch vehicle). Data is relayed from the Advanced Range Instrumented Aircraft (ARIA) to the EOS Operations Center. This information is limited to health and safety information. Figure 23 shows the Launch / Ascent phase timeline.

The FOT is responsible for the following activities:

a. Monitor Spacecraft Bus housekeeping telemetry (Launch / Ascent specific display sets).

b. Monitor and verify Spacecraft Bus operating mode.

c. Monitor and verify Spacecraft Bus resources.

d. Verify stored commands execution.

e. Spacecraft scheduling and planning.

TIMELINE TIME REFERENCE

500 km Perigee Injection Orbit

LAUNCH (MINUTES)

L-TBD	L-TBD	L	L+3	L+4	L+15

GO TO INTERNAL POWER (MINUTES)

G	G+TBD	G+5	G 8	G+9	G+20	G 20	G 21	G 22.5	G+37.5	G+39	G 47	G+69.5	G+82	G 82	G+118	G+TBD	G TBD	G TBD	G TBD	G+267

SEPARATION (MINUTES)

S	S	S+1	S+2.5	S+17.5	S+19	S+27	S+49.5	S+62	S+62	S+98	S+TBD	S+TBD	S+TBD	S+TBD	S+247

EVENT

- Go to Internal Power
- Disconnect T-0 Umbilical
- Ignite Stage 0 and Liftoff (L)
- Booster Engine Cutoff (BECO)
- Jettison Fairing
- Separate Launch Vehicle / Spacecraft - First Perigee
- Begin Rate Null (SCC Commands)
- Complete Rate Null
- Begin Solar Array Deployment
- Complete Solar Array Deployment
- Complete Earth Acquisition
- Enter first Eclipse
- Pass First Apogee
- Exit first Eclipse
- Solar Array begins to Track the Sun
- Pass second Perigee
- Activate HGA release mechanisms (SCC commands)
- HGA Deployment Complete
- HGA slew to Acquire sight to TDRSS (SCC Commands)
- S-Band link to TDRSS established through HGA
- First Delta-V Burn (third apogee earliest)

NOTE: This timeline was developed by the EOS System Engineering Group. Please note that it is preliminary and as definition of the Launch Vehicle System and sequence timing is developed, this timeline will be updated.

FIGURE 23 LAUNCH / ASCENT PHASE TIMELINE

During the Orbit Acquisition Initialization phase, a positive Spacecraft energy balance and an S-Band communications link are established. A stable earth-oriented attitude is attained and an onboard orbit estimate is obtained.

The FOT is prepared to take command and control of the Spacecraft and are responsible for the following activities:

a. Monitor Spacecraft Bus housekeeping telemetry (phase specific display sets).

b. Monitor and verify Spacecraft Bus operating mode.

c. Monitor and verify Spacecraft Bus resources.

d. Verify stored commands execution.

e. Verify Earth acquisition.

f. Verify Solar Array deployment and solar tracking.

g. Verify High Gain Antenna deployment.

h. Verify command and control capability.

i. Spacecraft scheduling and planning.

During the Orbit Acquisition phase, the Spacecraft performs a series of delta-V maneuvers (significant change in velocity vector). The FDF and FPSG are responsible for calculating burn parameters, planning the delta-V maneuvers, calculating the required firings, scheduling, and performing the maneuvers. Figure 24 shows a timeline of the planned maneuvers. Figure 25 shows an activity flow.

The FOT is responsible for the Spacecraft operation and the following activities:

a. Monitor Spacecraft Bus housekeeping telemetry.

b. Monitor and verify Spacecraft Bus operating mode.

c. Monitor and verify Spacecraft Bus resources.

d. Verify stored command execution.

e. Coordinate the FDF Delta-V data inputs to the EOC.

f. Verify on-board Solid State Recorder status.

g. Real-time command and control.

h. Spacecraft scheduling and planning.

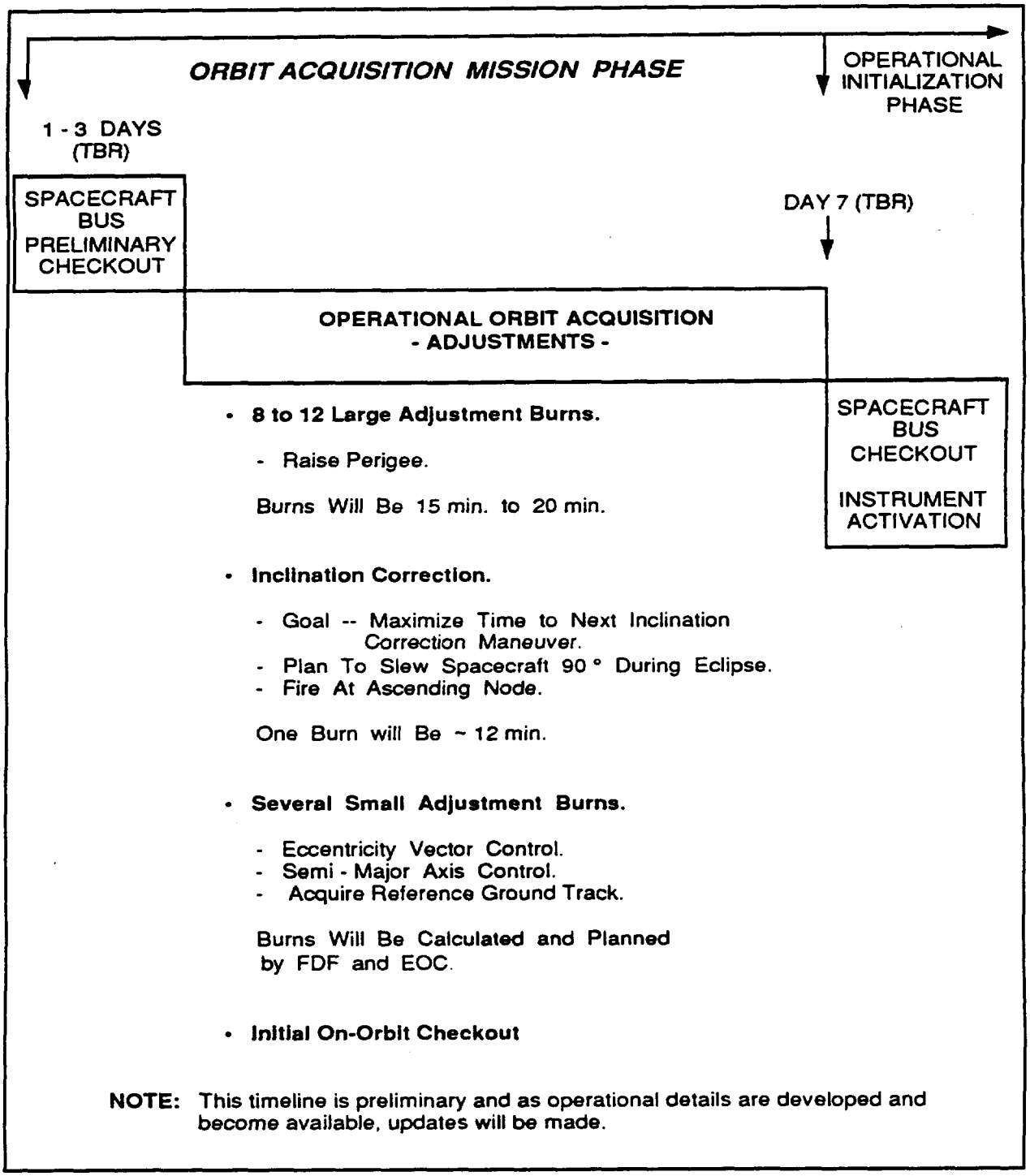

FIGURE 24 ORBIT ACQUISITION MISSION PHASE TIMELINE

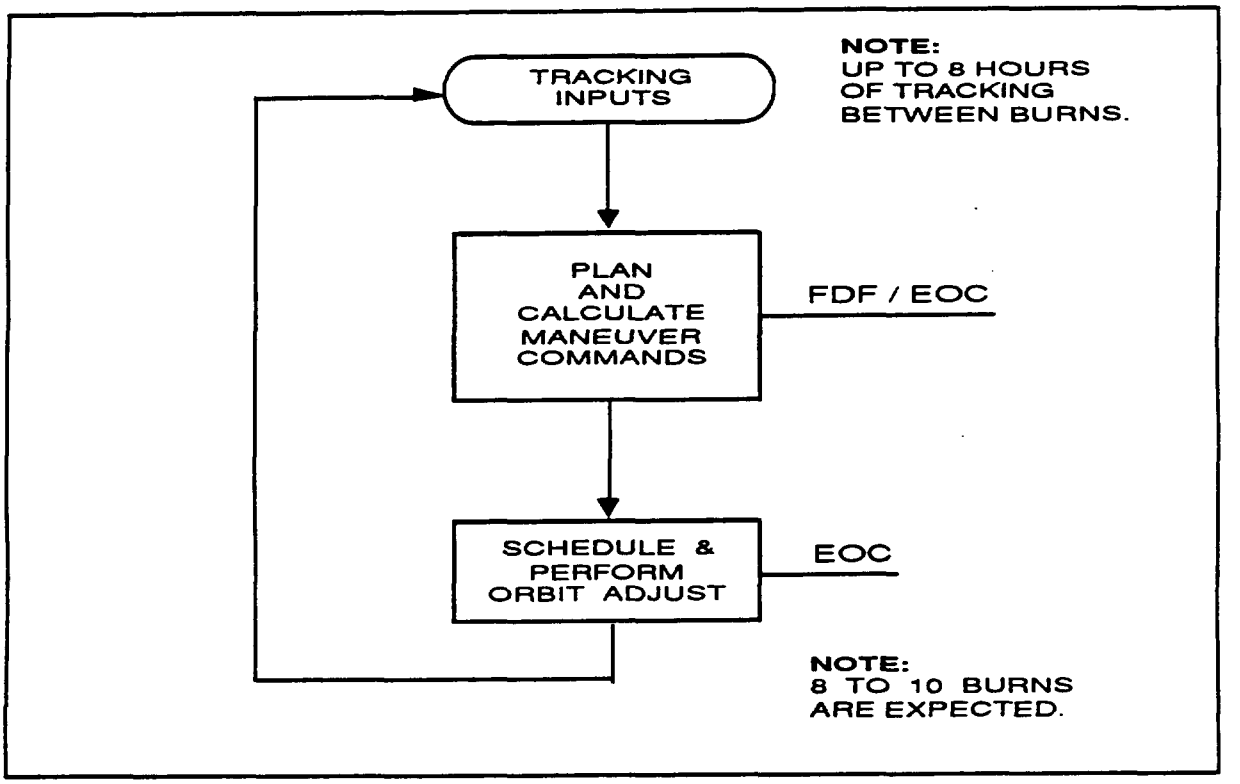

FIGURE 25 DELTA-V ACTIVITY FLOW

5.6.2 Activation

Spacecraft activation follows the launch through Orbit Acquisition phases, and leads into orbital mission operations. Most activation events occur over a period of several weeks during the Operational Initialization phase. The ASTER ICC is responsible for all ASTER activation plans, and is expected to provide the ASTER contribution to the initial Spacecraft activation plan. The FOT is responsible for the Spacecraft Bus activation plans and procedures.

An ASTER representative(s) is present in the EOC (TBR) during each ASTER activation event and coordinates the ASTER activation with the ASTER ICC. The FOT coordinates initial ASTER operations with other Spacecraft Bus and instrument activation events throughout this phase of operation. Specific requirements for FOT and ASTER ICC support are TBD. Activities during ASTER instrument activation are defined in Appendix VI.

The FOT is responsible for the activation and checkout of the Spacecraft subsystems and the following activities:

a. Monitor Spacecraft Bus housekeeping telemetry.

b. Monitor and verify Spacecraft Bus operating mode.

c. Provide limited monitoring of ASTER health and safety data.

d. Coordinate the ASTER operations with the ASTER ICC.

e. Monitor and verify Spacecraft Bus resources.

f. Spacecraft scheduling and planning.

g. Stored command table loads.

h. TDRS and EOS-AM Spacecraft ephemerides load.

i Verify stored commands execution.

j. Coordinate the FDF data inputs to the EOC for required Delta-V operations and TONS.

k. Verify SSR status and management initialization (normal operation).

l. Spacecraft and Ground Systems operational phase readiness verification and turn-over to the Spacecraft mature operations.

The ASTER ICC is responsible for monitoring the health and safety and performance of ASTER and for implementing the activation procedure, in coordination with the FOT in the EOC.

5.6.3 Transition to Orbital Operations

After the EOS-AM Spacecraft Bus and instruments are fully activated, Spacecraft operations transitions into the Operational mission phase. When this occurs, the normal daily flight operations planning and scheduling process begins along with normal ground system operations.

5.7 Spacecraft Maneuvers

Several types of maneuvers are executed by the Spacecraft at predefined points throughout the EOS-AM mission. A nominal long-term schedule of maneuver

events is available prior to launch, and is maintained current along with other long-term planning information. The EOS-AM Science Team is responsible for factoring the maneuver schedule into the long term science plan, and for establishing overall compatibility between this schedule and planned science operations. The FOT is responsible for maintaining maneuver schedule currency, and for notifying the EOS-AM Science Team (via the Project Scientist) of maneuver schedule changes.

The FOT has responsibility for all maneuver operations. The FOT and FDF are jointly responsible for the detailed planning of each Spacecraft maneuver and the FOT is responsible for maneuver execution. For orbit adjust maneuvers, the FDF is responsible for developing plans for corrective firings of the orbit adjust system and also is responsible for providing planning aid and operational data updates to reflect maneuver results. The FPSG coordinates with the FDF to schedule specific maneuver events consistent with long term science plan intent and is responsible for scheduling instrument operations to accommodate maneuver implementation. The ASTER ICC is responsible for defining all maneuver accommodation requirements (including special command sequences) for ASTER, for reviewing the maneuver operational plans, and for advising the FOT, as appropriate, of any concerns regarding these plans. Specific ASTER requirements for Spacecraft maneuver accommodation actions are defined in Appendix IV.

5.8 Special Observations

ASTER is capable of supporting Targets of Opportunities. These are DARs that request the observation of a transient phenomenon such as a volcano or an environmental disaster. The request is submitted to the ASTER ICC via the IMS (or the Japanese equivalent) in the form of a DAR. If the situation has been anticipated, guidelines and procedures for accepting and implementing the DAR are predefined, Otherwise, the ASTER ICC consults with the project scientist or the project scientists designee for approval. The project scientist or designee may consult with the FPSG to evaluate the potential impact of the TOO on the spacecraft bus operations or the operations of the other instrument. The ASTER ICC schedules the DAR within the previously defined onboard data storage capacity constraints. If the commands for the time of the TOO have not yet been specified by the ASTER ICC, then the TOO is included in the schedule before the commands are generated and the TOO requires no special action by the FPSG. The ASTER ICC provides the modified instrument activity list that incorporates the TOO to the FPSG. If the commands have been submitted, the ASTER ICC notifies the FPSG as soon as the TOO is approved. The ASTER ICC submits the commands to implement the TOO to the FPSG, which modifies the stored command loads (either to be loaded or that are already stored onboard the SCC) to implement the TOO. TOOs that are approved less than TBD hours prior to their execution will not be implemented unless the MOM/Project Operations Director or designee verifies that it can be accomplished safely.

Specific ASTER requirements for special observation actions are defined in Appendix IV.

5.9 Contingencies

In the event that a Spacecraft emergency situation develops, the FOT is responsible for taking whatever action is appropriate to preserve Spacecraft health and safety. The FOT requests emergency support from the NCC. If TDRSS cannot be used or is not available, the NCC works with the DSN/GN/WOTS for support. The FOT utilizes emergency support, as available, to establish a safe Spacecraft configuration. First priority is given to mission critical functions (i.e., communications, power, attitude control), and then to establishing a safe configuration for the EOS-AM instruments and other Spacecraft Bus subsystems.

The ASTER ICC is responsible for defining the safe/survival configuration(s) for ASTER, and the command sequences necessary to establish that configuration. Specific ASTER requirements for contingency actions are defined in Appendix IV.

If the Spacecraft enters Safe Mode or Survival Mode, the FOT is responsible for verifying/establishing a safe configuration for each instrument and Spacecraft Bus subsystem. The FOT notifies the ASTER ICC that the Safe Mode or Survival Mode has interrupted normal operation. The ASTER ICC is responsible for advising the FOT of any need for further priority attention to ASTER. The ASTER ICC is also responsible for defining any reactivation procedure to be followed in restoring normal instrument operation. The FOT is responsible for implementing the spacecraft bus Safe Mode or Survival Mode reaction and recovery operations. These actions include:

a. Initiate the appropriate contingency procedure.

b. Recover and analyze stored housekeeping / health and safety data from the on-board Solid State Recorder (if possible).

c. Notify the ASTER ICC to coordinate actions that may have occurred which relate to instrument operation.

d. Notify cognizant engineering and management personnel.

e. Request appropriate institutional support.

f. Analyze associated telemetry data available for problem isolation.

g. Initiate a corrective action plan if applicable.

h. Continue to monitor real-time telemetry if available, and log all events.

The ASTER ICC is responsible for the recovery and reactivation of ASTER after a spacecraft bus anomaly.

The ASTER ICC monitors the instrument status. If an anomaly is discovered, the ASTER ICC notifies the FOT. The FOT requests any additional institutional support (e.g., additional TDRSS contacts) and coordinates any spacecraft bus operations in support of the ASTER anomaly investigation or recovery procedures (such as inhibiting stored commands to ASTER). The ASTER ICC may specify real time commands for transmission to the instrument. The FOT monitors the real time commanding, as described in section 5.3.

The FOT monitors a subset of ASTER housekeeping data. The FOT notifies the ASTER ICC in the event an instrument health or safety incident is discovered by the Flight Operations Team. The FOT follows predefined instructions as prescribed by the ASTER ICC/operations staff. The FOT has available and maintains a set of "safing" commands provided by the ICC/TL operations staff. The ASTER ICC is responsible for evaluating the incident and advising the FOT of instrument status and plans for resuming operations.

The ASTER ICC is responsible for re-establishing the continuity of planned science operations, as defined in the Spacecraft activity schedule, once the Spacecraft has been returned to a normal operating configuration.

The ASTER ICC is responsible for defining all health and safety telemetry parameters and FOT monitoring criteria for ASTER, and the procedures to be followed by the FOT should a ASTER health and safety incident occur. The FOT is responsible for executing predefined monitoring and response procedures, consulting with the ASTER ICC regarding instrument status, and further response actions which might be appropriate. The FOT advises the ICC/TL of ASTER status regarding operational planning activities which are currently underway and the FOT is responsible for adjusting ongoing plans for ASTER operation to accommodate the situation at hand (in coordination with the ASTER ICC). The ASTER ICC is responsible for defining command sequence, EOC procedure and any other modifications necessary to reflect changes in ASTER operational capability or status whenever necessary throughout the EOS-AM mission.

6 INTERFACE EXCHANGE ITEMS

The ASTER ICC exchanges information electronically with the EOC and the Flight Operations Team. The ASTER ICC is connected to the EOC via the EOSDIS and ASTER GDS computer networks. These networks are available around the clock, supporting the exchange of information whenever it is required. The formats and forms (TBD) for this information exchange are the responsibilities of NASA-GSFC and JAROS/ERSDAC.

6.1 Planning and Scheduling

The ASTER ICC may access any planning and scheduling products in the EOC. This includes the long term plans, planning aids, the list of activities for the instruments, the list of deviations for the instrument(s), the TDRSS schedule for the Spacecraft, and the schedules for the other instruments and the Spacecraft Bus subsystems.

The initial list of instrument activities is submitted by the ASTER ICC at least 2 weeks in advance. The FPSG uses this information along with the requirements of the other instruments and the spacecraft to request TDRSS contacts. The FPSG provides the ASTER ICC with the schedule of TDRSS contacts and identifies any ASTER activities that can not be accommodated within the TDRSS schedule.

The ASTER ICC submits the final list of activities at least 4 days prior to the activities. This list may be different from the initial list as long as it can be accommodated within the scheduled TDRSS contacts.

The ASTER ICC notifies the FPSG of targets of opportunities that affect the activities for which commands have already been generated. The ASTER ICC identifies the new activities, any previously scheduled activities that must be changed or deleted, and the commands needed to implement the new or modified activities.

The ASTER ICC can submit and review the schedule of deviations from the planned activities. This schedule includes activities such as special calibrations and special operations. These deviations are provided to the FPSG TBD in advance. Note that changes to the planned activities due to an instrument or Spacecraft problem are handled as exceptions to the plans and schedules. The schedule of activities and commands associated with recovering from an anomaly is typically developed over shorter time frames than those for normal operations.

Quick look data, either housekeeping, instrument engineering, or science data, is identified during the scheduling process and the secondary header flag in the packet is set or the EDOS delivery orders for the delivery of the data from a TDRSS session is modified. The ASTER ICC submits requests for quick look data at least several days in advance to the Flight Planning and Scheduling Group (TBD) using the TBD.

6.2 Command Generation

Command generation includes real-time commands and SCC stored commands.

The ASTER ICC provides instrument tables (TBD) to the EOC for uplink, using the TBD. Non-urgent information for uplink is provided at least two days in advance. The TBD is also used to send the EOC the command mnemonics required to implement any normal or non-routine activity, such as the commands to recover from an anomalous situation. The ASTER ICC/EOC procedures and protocols insure that the transfer of information to be uplinked is authorized, complete, and consistent.

The ASTER ICC is capable of using the TBD to review and/or approve the command loads generated by the FOT in the EOC from the planned activity schedule and the requested deviations from normal operations. Planning, scheduling, and/or command products that must be approved by the ASTER ICC for routine and anomalous operations are TBD.

6.3 Real Time Operations

The ASTER ICC monitors instrument and spacecraft housekeeping data as received from EDOS.

The ASTER ICC may monitor the commanding process via the TBD. Status information is available on which commands have been generated, which have been successfully uplinked, and which have been issued to the instrument. The verification that the commands have been successfully uplinked is the responsibility of the EOC. The verification of the contents of the stored commands in the SCC is the responsibility of the EOC. The verification that the instrument successfully executed the commands is the responsibility of the ASTER ICC. Exceptions are to TBD by the ECS contractor and the ASTER ICC.

6.4 Analysis

In addition to housekeeping data, the ASTER TL is able to use the TBD to access the EOC operations history log through the ASTER ICC. This log contains a complete log of all significant activities in the EOC, including the schedule, command and command verification information, alarms and limit violations, and selected operator actions. About 7 days of operations history data is kept in the EOC; older logs are available from the GSFC DAAC. The TBD provides the tools to extract data from the operations history by time and type.

6.5. Operations Database

The ASTER ICC supplies the EOC with an operations data base prior to launch that contains the instrument telemetry formats, command formats, procedures, limits, constraints, and associated information including housekeeping data conversion tables. The ASTER ICC may view this data base using the TBD and may submit requests for changes to the data base. The data base is under configuration control. The ECS contractor is responsible for configuration control and the details are TBD.

The EOC supplies the ASTER ICC with an operations data base that contains the spacecraft housekeeping telemetry formats, limits, and associated information.

Urgent requests can be handled more expeditiously (details are TBD).

6.6 Other Interface Exchange Items

The TBD provides an electronic mail capability to support the general communication between the ASTER ICC, other instrument teams, and the FOT personnel in the EOC.

The TBD provides a file transfer capability for the exchange of bulk data.

The ASTER ICC uses the TBD to provide the EOC with periodic operations reports on the status of ASTER. Integrated reports on the Spacecraft and instruments developed by the EOC are available to the ASTER ICC via the TBD.

7 JOINT OPERATING PROCEDURES

The interface procedures which are followed in conducting ASTER flight operations are understood to be as follows:

7.1 ICC/EOC FOT Interface

The ASTER ICC and the Flight Operations Team (see Figure 26) interface routinely regarding mission planning, uplink generation, and performance verification matters and interface as required regarding real-time operations. The FOT and ASTER ICC interface as appropriate regarding ASTER instrument accommodations of Spacecraft maneuvers and contingency operations. The FPSG serves as the primary point of contact for the ASTER ICC regarding all EOC operations, and regarding all flight operations plans, planning aids, command generation inputs and outputs, and performance reports which are pertinent to ASTER.

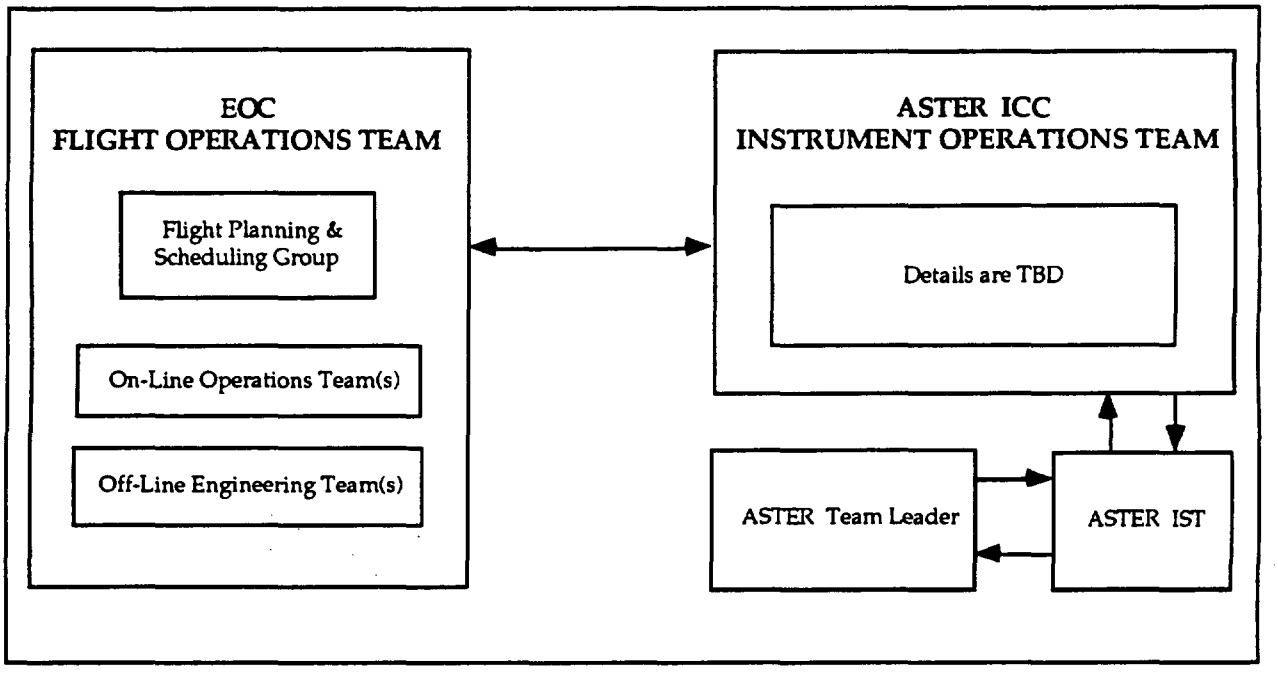

FIGURE 26 ASTER ICC / EOC FOT INTERFACE

7.1.1 Daily Operations Planning

Under normal circumstances, the ASTER activity schedule is used to develop the initial Spacecraft activity schedule TBD days before the corresponding operational period begins. The ASTER ICC provides an updated activity schedule, in the event planned ASTER activities need to be altered. The FPSG staff coordinates all operations planning inputs, and keeps the ASTER ICC advised of the timetable for accessing plans to be reviewed, and for providing inputs and/or comments regarding these plans.

7.1.2 Command Generation

The commands to implement ASTER operations are submitted by the ASTER ICC as mnemonics to the EOC. The FPSG or the FOT oversees the subsequent command generation and transmission.

7.1.3 Special Operations

The FPSG notifies the ASTER ICC whenever a Spacecraft maneuver operation is being planned, or whenever a special operation (TBR) or contingency operation which affects ASTER occurs. The ASTER ICC defines ASTER requirements for accommodating the special operation and/or for resuming normal operation when the special operation has concluded. Where real-time operation is a factor, the FOT represents the ASTER ICC in coordinating implementation of appropriate real-time procedures. If a special operation disrupts planned operations (e.g., contingency situation), the FOT advises the ASTER ICC of the disruption, and they will jointly define the procedure for restoring operational plan continuity. The ASTER ICC will notify the FOT or FPSG if a TOO impacts already generated commands and will coordinate the change to the load to ensure safe operations.

7.1.4 EOC Database

The FPSG manages the availability of operations plans, planning aids, and command generation processing inputs and outputs, and coordinates with the ASTER ICC regarding access to this information. The ASTER ICC generates all additions, deletions, and modifications to the EOC database for ASTER, and notifies the FPSG of each submission. The FPSG coordinates the database approval and update procedure required to incorporate each change, and notifies the ASTER ICC when the change has been incorporated. The ASTER ICC reviews the modified database, and notifies the FPSG of any discrepancy which requires corrective action. The format to be used is TBD and is the responsibility of the ECS contractor.

7.2 ICC/EOC Command Management Function Interface

The ASTER ICC interfaces with the EOC through the TBD interface defined in TBD. The basic interface for information exchange is via TBD. The ASTER ICC has access to EOC resident information. (details are TBD).

The ASTER ICC interfaces procedurally with the EOC as follows:

7.2.1 Operations Plans

In support of flight planning activities, the ASTER ICC can access EOC information via the TBD. Any comments or proposed deviations to operational plans may be flagged (TBR) for the FPSG attention.

7.2.2 Planning Aids

Short term planning aid data initially appears within the EOC TBD weeks beforehand, and will be updated at TBD intervals. Long term planning aids are updated as requested by the EOS-AM Science Team (normally for each long term science plan update). Special planning aid data files may be assembled to contain only data of interest to the ASTER ICC and transferred to the ASTER ICC. Planning aid data is updated within the EOC according to a (TBD) regular schedule.

7.2.3 Command Generation

ASTER provides the commands (as mnemonics) to implement all ASTER operations except for safing operations initiated by the FOT in the EOC.

7.2.4 Performance Feedback

Observed performance of ASTER is documented in feedback reports which are transmitted in text form using the electronic mail capabilities of the EOC and ICC interface. Routine and special reports are generated by the ASTER ICC at his TBD, and are transferred to the EOC for posting. Performance reports are filed and archived by the FPSG.

7.3 ICC/FOT Interface

The ASTER ICC and the on-line operations team interface to the extent that real-time operations are significant to the ASTER ICC, and as required to exchange instrument/Spacecraft Bus performance information or to supplement the routine interface between the ASTER ICC and the FPSG.

The ASTER ICC interfaces procedurally with the FOT as follows:

7.3.1 Real Time Operations

For real-time operations, the EOC FOT (TBD) is the point of contact for the ASTER ICC (TBR). In the event of an instrument anomaly, the ASTER ICC (TBD) coordinates with the EOC FOT (TBD) for any actions required. The ASTER ICC (TBD) contacts the EOC FOT as soon as possible to review the situation and to define any follow-up activities required.

7.3.2 Special Operations

The normal interface for handling maneuver accommodation, contingency adjustments, and departures from planned operations involves the ASTER ICC and the FPSG. The EOC on-line operations team may, however, become involved in these matters in lieu of the FPSG staff during non-working hours, especially under time-critical circumstances. In such a case, the EOC on-line operations team handles immediate concerns, with the FPSG staff handling longer-term and follow-through aspects.

7.3.3 Initial Operations

During initial ASTER activation, the ASTER personnel supported by the ASTER ICC will assist the FOT on the requested base. Flight planning and scheduling personnel of the EOC FOT interface with the ASTER ICC to perform the ASTER planning and scheduling functions.

7.3.4 Performance Verification

The ASTER ICC and FOT may exchange performance information regarding ASTER and/or Spacecraft operation in order to fully evaluate observed performance and capability. A Spacecraft engineer from the FOT serves as the point of contact for Spacecraft performance verification inquiries.

7.4 ICC/TL Access to Telemetry

The following guidelines define access to telemetry data for the ASTER ICC/TL:

a. Telemetry data is recorded continuously throughout the EOS-AM mission by the on-board SSR. Data retrieval is obtained TBD per orbit.

b. Telemetry data is acquired in real-time for approximately 20 minutes of each orbit.

c. The EOC on-line operations team and ASTER ICC monitors all real-time contact intervals and the telemetry data acquired is processed in real-time. The EOC computer performs status determination, event detection and limit-check processing, and generates displays containing telemetry data and processing results. The ICC computer details are TBD.

d. The ASTER ICC will receive TBD telemetry data on a TBD schedule from EDOS.

8 IMPLEMENTATION AGREEMENTS

The following paragraphs describe the plans for implementing the data input to the operational system to support ASTER flight operations.

8.1 Flight Operations Database

The basic flight operations database is provided by the Spacecraft contractor and Instrument contractors. Database conversion, to the EOC system, is the responsibility of the EOSDIS Core System contractor. This database, containing commands, telemetry, and limits, is used for in-orbit flight operations.

8.1.1 Commands

Instrument commands are placed in the EOC database. The database contains command capabilities identified by the ASTER ICC/TL, with support from the FOT and Spacecraft subsystem engineers. All flight operational commanding required is tested and demonstrated during Spacecraft Integration and Test. The EOC command categories are TBD.

8.1.2 Instrument Telemetry

The ASTER ICC/TL, with support from the FOT and Spacecraft subsystem engineers, identifies telemetry point definitions required for flight operations; and the Spacecraft contractor ensure that telemetry points have been defined and tested/demonstrated during Spacecraft Integration and Test.

8.1.3 Instrument Limits

The ASTER ICC/TL, with support from FOT and Spacecraft subsystem engineers, ensures that the Spacecraft integration and test limit definitions are correct for on-orbit flight operations. If not, new limits are defined and the ECS contractor coordinates (Project approval and entry) the change to the EOC database.

The ASTER ICC/TL with support from the FOT and Spacecraft subsystem engineers identifies the specific reactions to be taken during all out-of-limit conditions (i.e. Red, Yellow, and Delta limits). The FOT documents all out-of-limit reactions in the TBD Plan.

8.1.4 Database Approval

The ASTER ICC and Spacecraft subsystem engineers access the database via TBD to review their appropriate section(s). Changes to the database are submitted via TBD. The ICC and Spacecraft subsystem engineer checks the database to ensure that the data is functionally and syntactically correct. After all of the database information for ASTER has been approved, the ASTER ICC/TL (TBD) signs off on his portion of the EOC database.

8.2 Operational Displays

Operational displays are TBD and are the responsibility of the EOSDIS Core contractor. A core set of displays common to the ASTER ICC and EOC may be developed. Details are TBD.

The mechanism for defining pages and transferring Spacecraft integration and test pages to the EOC is TBD.

8.3 Operations Procedures

The ASTER ICC, with support from the FOT and Spacecraft subsystem engineers, establishes what operational procedures are needed for on-orbit flight operations. The ASTER ICC should keep in mind that I & T building blocks may have to be assembled into contiguous functional activities that are of reasonable duration harmonious with the in-orbit operational contacts. The FOT will review all ASTER ICC completed operational procedures for compatibility with flight operations such as procedure duration, logical break points, etc.

8.3.1 EOC Definition

The FOT furnishes to the ASTER ICC a description of the EOC operations procedures. In addition, the FOT is available to answer questions regarding EOC operations during operations procedure development.

8.3.2 I&T Procedures to EOC Operations Procedures Conversion

The conversion of procedures to the EOC is the responsibility of the EOSDIS Core System contractor and is TBD.

8.3.3 I&T Databases to EOC Operations Databases Conversion

The conversion of databases to the EOC is the responsibility of the EOSDIS Core System contractor and is TBD.

8.3.4 Flight Unique Procedures

The ASTER ICC/TL, with support from the FOT and Spacecraft subsystem engineers, identifies any ASTER instrument unique flight operations procedures. These procedures are created by the ASTER ICC.

8.3.5 Procedure Submittal

The ASTER generated operations procedures are submitted to the FOT by one of the following methods: TBD

Procedure entry, after approval, into the operational system is the responsibility of the EOSDIS Core System contractor and is TBD.

8.3.6 Approved EOC Procedures

Once the procedures have been reviewed and approved, they cannot be changed without the NASA Mission Operations Manager's approval.

8.3.7 Procedure Verification

The FOT reviews all operations procedures to verify the accuracy of the directives and also the logic to the extent possible. The ASTER ICC with support from the FOT and Spacecraft subsystem engineers identifies operations procedures that require execution for verification. Prior to launch, the FOT conducts a scheduled verification of operations procedures that will include EOC execution and transmission to the Spacecraft/instrument. Procedure verification details are the responsibility of the EOSDIS contractor and are TBD.

8.4 Narrative Procedures

The ASTER ICC, with support from the FOT and Spacecraft subsystem engineers, defines any standard and contingency operating procedures needed for in-orbit flight operations.

8.4.1 Standard Operating Procedures

The standard operating procedures define the day-to-day operations of the EOS-AM Spacecraft at the EOC.

These procedures are baselined and procedure changes require the NASA Mission Operations Manager's approval.

These procedures are defined by the EOSDIS contractor and are TBD.

8.4.2 Contingency Operating Procedures

The contingency operating procedures define the actions required by the FOT during potential and credible anticipated non-nominal situations. Examples of this category of procedures for ASTER are:

a. Instrument requirements during Spacecraft safe mode and survival mode.

b. A procedure to be followed in the event of an ASTER ALERT condition.

These procedures are defined by the EOSDIS contractor in coordination with the ASTER ICC and are TBD.

APPENDIX I

10 SPACECRAFT CONTROLS COMPUTER INSTRUMENT REQUIREMENTS

Specific requirements for interaction between the Spacecraft on-board computer and ASTER are understood to be as follows:

10.1 Stored Command Requirements

ASTER stored command requirements are as follows:

10.1.1 Absolute Time Commands

ASTER requirements for absolute time command utilization are as follows:

a. The maximum number of absolute time commands per day is 1050 commands (TBR).

b. ASTER requires a time tag resolution of 128 msec (TBR).

c. TBD

10.1.2 Relative Time Command Sequences

ASTER requirements for Relative Time Command Sequences (RTCS) command utilization are as follows:

a. command list currently defined by ASTER is shown in Table 10.1-1.

b. ASTER requires a time delay resolution of 128 msec (TBR).

10.2 Telemetry Monitor Requirements

Telemetry Monitor (TMON) application to ASTER is TBD.

ASTER will submit these preliminary requirements by December 1993.

TABLE IV (JAROS TABLE 10.1-1)

TABLE 10.1-1 Relative Time Command Sequence List [TENTATIVE] (1 of 2)[Added by JAROS]

No.	Time Delay	Command Item	Type	Subsystem
Relative Time CommandSequence 1 [Start of PREPARATION2]				
1	0 msec	SWIR DETECTOR HEATER ON	CT[SM]	CSP→SWIR
2	128 msec	SWIR HEATER CONTROL 1 (TBD)	CT[SM]	CSP→SWIR
3	256 msec	SWIR HEATER CONTROL 2 (TBD)	CT[SM]	CSP→SWIR
4	300032 msec	TIR OPERATIONAL POWER ON	CT[P]	CSP→TIR
5	300160 msec	TIR SCANNER POWER ON	CT[P]	CSP→TIR
6	300288 msec	TIR MODE SETTING [for calibration]	CT[SM]	CSP→TIR
7	480000 msec	SWIR SIGNAL PROCESSING 1 (Analog) POWER ON	CT[SM]	CSP→SWIR
8	480128 msec	SWIR SIGNAL PROCESSING 2 (Analog) POWER ON	CT[SM]	CSP→SWIR
9	480256 msec	SWIR SIGNAL PROCESSING 3 (Analog) POWER ON	CT[SM]	CSP→SWIR
Relative Time Command Sequence 2 [End of PREPARATION2]				
1	0 msec	SWIR DETECTOR HEATER OFF	CT[SM]	CSP→SWIR
2	128msec	SWIR DETECTOR DRIVER POWER ON	CT[SM]	CSP→SWIR
3	256 msec	SWIR HEATER CONTROL 3 (TBD)	CT[SM]	CSP→SWIR
4	384 msec	SWIR HEATER CONTROL 4 (TBD)	CT[SM]	CSP→SWIR
5	512 msec	SWIR HEATER CONTROL 5 (TBD)	CT[SM]	CSP→SWIR
6	640 msec	SWIR HEATER CONTROL 6 (TBD)	CT[SM]	CSP→SWIR
7	120064 msec	TIR DATA PROCESSING ON	RD	CSP
8	150144 msec	TIR DATA PROCESSING OFF	RD	CSP
9	150272 msec	TIR CLOCK ON (TBD)	CT	CSP
Relative Time Command Sequence 3 [TIR SHORT-TERM CAL. before Observation]				
1	0 msec	TIR CLOCK OFF	CT	CSP
2	128 msec	TIR DATA PROCESSING ON	RD	CSP
3	30208 msec	TIR DATA PROCESSING OFF	RD	CSP
4	30336 msec	TIR CLOCK ON	CT	CSP
Relative Time Command Sequence 4 [Start of V/S/T OBS.]				
1	0 msec	SWIR SIGNAL PROCESSING 4 (Digital) POWER ON	CT[SM]	CSP→SWIR
2	128 msec	TIR CLOCK OFF (TBR)	CT	CSP
3	256 msec	TIR DATA PROCESSING ON	RD	CSP
4	384 msec	SWIR DATA PROCESSING ON	RD	CSP
5	512 msec	VNIR 1 DATA PROCESSING ON	RD	CSP
6	640 msec	VNIR 2 DATA PROCESSING ON	RD	CSP

Remarks) · Type : Command Type
RD : Relay Drive Command
CT : Command and Telemetry Bus Command
[P] : Pulse Command (ASTER Internal Command)
[SM] : Serial Magnitude Command (ASTER Internal Command)
· The time delay shows the relative time from start of each relative time command sequence.

TABLE IV (continued) [JAROS TABLE 10.1-1]

TABLE 10.1-1 Relative Time Command Sequence List [TENTATIVE] (2 of 2)[Added by JAROS]

No.	Time Delay	Command Item	Type	Subsystem
Relative Time Command Sequence 5 [End of V/S/T OBS.]				
1	0 msec	VNIR 1 DATA PROCESSING OFF	RD	CSP
2	128 msec	VNIR 2 DATA PROCESSING OFF	RD	CSP
3	256 msec	SWIR DATA PROCESSING OFF	RD	CSP
4	384 msec	TIR DATA PROCESSING OFF	RD	CSP
5	512 msec	TIR CLOCK ON (TBD)	CT	CSP
6	640 msec	TIR MODE SETTING [for scan stop and calibration]	CT[SM]	CSP→TIR
7	768 msec	SWIR SIGNAL PROCESSING 4 (Digital) POWER OFF	CT[SM]	CSP→SWIR
8	896 msec	VNIR STANDBY	CT[SM]	CSP→VNIR
Relative Time Command Sequence 6 [Start of S/T OBS.]				
1	0 msec	SWIR SIGNAL PROCESSING 4 (Digital) POWER ON	CT[SM]	CSP→SWIR
2	128 msec	TIR CLOCK OFF (TBR)	CT	CSP
3	256 msec	TIR DATA PROCESSING ON	RD	CSP
4	384 msec	SWIR DATA PROCESSING ON	RD	CSP
Relative Time Command Sequence 7 [End of S/T OBS.]				
1	0 msec	SWIR DATA PROCESSING OFF	RD	CSP
2	128 msec	TIR DATA PROCESSING OFF	RD	CSP
3	256 msec	TIR CLOCK ON (TBD)	CT	CSP
4	384 msec	TIR MODE SETTING [for scan stop and calibration]	CT[SM]	CSP→TIR
5	512 msec	SWIR SIGNAL PROCESSING 4 (Digital) POWER OFF	CT[SM]	CSP→SWIR
Relative Time Command Sequence 8 [Start of VNIR OBS.]				
1	0 msec	VNIR 1 DATA PROCESSING ON	RD	CSP
2	128 msec	VNIR 2 DATA PROCESSING ON	RD	CSP
Relative Time Command Sequence 9 [End of VNIR OBS.]				
1	0 msec	VNIR 1 DATA PROCESSING OFF	RD	CSP
2	128 msec	VNIR 2 DATA PROCESSING OFF	RD	CSP
3	256 msec	VNIR STANDBY	CT[SM]	CSP→VNIR
Relative Time Command Sequence 10 [Start of TIR OBS.]				
1	0 msec	TIR CLOCK OFF (TBD)	CT	CSP
2	128 msec	TIR DATA PROCESSING ON	RD	CSP
Relative Time Command Sequence 11 [End of TIR OBS.]				
1	0 msec	TIR DATA PROCESSING OFF	RD	CSP
2	128 msec	TIR CLOCK ON (TBD)	CT	CSP
3	256 msec	TIR MODE SETTING [for scan stop and calibration]	CT[SM]	CSP→TIR

Remarks) · Type : Command Type
RD : Relay Drive Command
CT : Command and Telemetry Bus Command
[P] : Pulse Command (ASTER Internal Command)
[SM] : Serial Magnitude Command (ASTER Internal Command)
· The time delay shows the relative time from start of each relative time command sequence.

APPENDIX II

20 INSTRUMENT COMMAND PROCESSING REQUIREMENT

Specific command processing requirements for ASTER are understood to be as follows:

ASTER will submit these preliminary requirements by January 1994, except for paragraph 20.3.1.

20.1 Activity Planning Requirements

Activity planning for ASTER is as follows:

20.1.1 Activity Definition

TBD

20.1.2 Event Definition

TBD

20.1.3 Activity Scheduling

There are critical timing requirements for ASTER commands or activities. Details are TBD.

20.2 Constraint Check Requirements

TBD

20.2.1 Command Level

TBD

20.2.2 Activity Level

TBD

20.2.3 Schedule Conflicts

The timing of ASTER commands may be TBD to resolve schedule conflicts.

20.3 Real-Time Command Requirements

TBD

20.3.1 Utilization Plans

The plans for real-time command utilization are as follows:

a. Launch-lock Off operation
b. Start of Cool-Down Mode
c. Exit from Survival Mode
d. TBD

20.3.2 Command Generation Capabilities

TBD

20.3.3 Transmission Requirements

Unique requirements for transmitting real-time ASTER commands are TBD.

20.4 Microprocessor Load Handling Requirements

Does not apply to ASTER.

20.4.1 Uplink Message Structures

Does not apply to ASTER

20.4.2 Transmission Requirements

Does not apply to ASTER.

20.5 Command Database Requirements

TBD

20.5.1 Command Definition

TBD

20.5.2 Unique Command Structures

None have been identified for ASTER.

20.5.3 Activity Definitions (EOC Command Management)

TBD

20.5.4 Stored Command Sequences (EOC Command Management)

TBD

20.5.5 Real-Time Command Sequences (EOC)

TBD

20.5.6 Utilization Constraints

TBD

APPENDIX III

30 TELEMETRY PROCESSING REQUIREMENTS

Specific requirements for the processing of real-time ASTER telemetry data are understood to be as follows:

ASTER will submit these preliminary requirements by January 1994.

30.1 Decommutation Requirements

All telemetry required by the EOC to support instrument early orbit operation and activation are assumed to be defined in the I&T databases to be transferred to the EOC.

ASTER will submit these preliminary requirements by January 1994.

30.1.1 Engineering Telemetry Format

ASTER telemetry formats are TBD.

30.1.2 Science Telemetry Format

ASTER telemetry formats are TBD.

30.2 Derived Function Generation Requirements

TBD

30.3 Status Determination Requirements

TBD

30.3.1 Mode Definition

TBS

30.3.2 Event/Mode-Change Detection

TBD

30.4 Uplink Verification Requirements

TBD

30.4.1 Command Verification

TBD

30.4.2 Microprocessor Load Verification

Does not apply to ASTER

30.5 Health and Safety Monitoring Requirements

ASTER health and safety are monitored by the ASTER ICC and EOC. The ASTER ICC identifies critical instrument health and safety parameters along with their limits.

30.5.1 Limit Check Requirements

TBD

30.5.2 Alarm Requirements

Alarms are required when yellow or red limits are reached. Other conditions are (TBD).

30.6 Display Generation Requirements

TBD

30.6.1 Parameter Calibration

TBD

30.6.2 CRT Page Display

TBD

30.6.3 Strip-Chart Recorder Displays

TBD

30.6.4 Hardcopy Outputs

TBD

30.7 EOC Telemetry Database Requirements

TBD

30.7.1 Telemetry Function Definition

TBD

30.7.2 Derived Function Definition

TBD

30.7.3 Mode/Event Definition

TBD

30.7.4 Limit Check Thresholds

TBD

30.7.5 Alarm Generation Criteria

TBD

30.7.6 Command Verification Criteria

TBD

30.7.7 Display Definition

TBD

30.7.8 Calibration Parameters

TBD

APPENDIX IV

40 OPERATIONAL ACTION REQUIREMENTS

Specific ASTER requirements for operational action under specified conditions are understood to be as follows:

40.1 Contingency Action Requirements

TBD

40.1.1 Emergency Power-Down

The emergency power down sequences for ASTER are TBD.

Preliminary emergency power down sequences requirements for ASTER will be submitted by September 1993.

40.1.2 Limits/Alarm Reaction

Out-of-limits conditions are reported to the ASTER ICC. Out of limit conditions are (TBD).

ASTER will submit these preliminary out of limit conditions by January 1994.

40.1.3 Spacecraft Safe Mode (SCC running)

TBD.

ASTER will submit these requirements by January 1994.

40.1.4 SCC Halted

TBD

ASTER will submit these requirements by January 1994.

40.1.5 Other On-Board Processors Halted

TBD

ASTER will submit these requirements by January 1994.

40.1.6 Uplink Transmission Failure

Does not apply to ASTER.

40.2 Preactivation Requirements

TBD

ASTER will submit these requirements by January 1994.

40.3 Spacecraft Maneuver Accommodation

ASTER should not observe if the pointing or jitter stability allocations are not satisfied during Spacecraft maneuvers. The plans for ASTER operation during Spacecraft maneuvers are as follows:

a. Best case – ASTER operates in STANDBY1 Mode
b. Worst Case – ASTER operates in Survival Mode

40.3.1 Orbit Adjust

TBD

40.4 Alignment/Calibration Requirements

Radiometric Calibration and Geometric alignment requirements are as follows:

40.4.1 Radiometric Calibration

The three radiometers (VNIR, SWIR and TIR) will be calibrated every 16 days, using standard lamps and blackbody. Three or four (TBD) periods will be needed to accomplish one complete set of calibration for the three radiometers.

In addition to the above, radiometric calibration with simultaneous ground measurement will be performed every three months (TBD).

40.4.2 Geometric Alignment Requirement

Geometric calibration using Ground Control Point (GCP) for geolocation will be performed every (TBD).

40.5 Special Observation Requirements

TBD

APPENDIX V

50 PLANNING AID REQUIREMENTS

ASTER will submit these preliminary requirements by September 1994.

A standard set of orbital parameters and selected orbital events is generated by the FDF and transferred to the EOC (and TBD) where the ASTER ICC can access the data for planning purposes and for use in the generation of any additional unique planning aids required. The accuracy of the data is TBD (the best possible).

The following are example summaries of the long term and short term data to be provided. The actual data to be selected for ASTER use is TBD. Details associated with these TBD parameters are defined in TBD.

50.1 Parameter Definition

TBD

50.1.1 Long Term

The long term aids to be used by ASTER are TBD.

The following is an example summary of long term aids:

EOS-AM Orbital Characteristics

a. Brouwer mean orbital elements
b. Solar beta angle
c. Direction of S/C flight
d. Local mean Sun time
e. S/C ascending node
f. Length of TBD day and night
g. Length of S/C day and night

Ephemeris:

a. Solar
b. Lunar
c. Planetary

Star Catalog

a. Ascending Node Prediction
b. Longitudinal spacing and precession rate.

Solar Eclipse predictions.

50.1.2 Short Term

The short term aids to be used by ASTER is TBD.

The following is an example summary of short term aids:

a. Spacecraft ephemeris
b. Brouwer mean orbital elements.
c. Predicted Orbit Adjust time
d. Solar Eclipse predicts.

Orbital Events
a. Ascending and descending node
b. Spacecraft nadir sunrise and sunset terminator crossing
c. Terminators (both) for TBD degree line of sight at TBD altitude
d. South Atlantic Anomaly entrance and exit.
e. Sunset and Sunrise at TBD altitude.
f. Yaw and elevation angle to sun TBD-seconds before sunset
g. Yaw angle to sun at sunrise for TBD altitude.
h. Grazing sunrise begin/sunset end event
i. Grazing sunrise end event

Solar Beta Angle.

50.2 Parameter Specifications

The ASTER unique specifications for planning aid parameter are TBD

50.2.1 Information Accuracy

TBD.

50.2.2 Data Precision

TBD.

50.2.3 Data Frequency

TBD.

50.3 Information Handling Requirements

The ASTER ICC/TL accesses planning and scheduling tools via the TBD. Details are TBD.

50.3.1 Format

Standard ICC/EOC interface file format is TBD.

50.3.2 Packaging

Standard (i.e., time-annotated date file) is TBD.

50.4 Access Timeline Requirements

ASTER accesses planning and scheduling aid data on a TBD basis.

50.4.1 Lead Time

TBD (i.e., long term parameters consistent with long-term science planning schedule; short-term parameters TBD days/hours beforehand).

50.4.2 Retention

TBD (i.e., long term parameter projections throughout mission, short-term parameters until current).

APPENDIX VI

60 SPECIAL ACTIVATION REQUIREMENT

ASTER will submit these preliminary requirements by September 1994.

Specific requirements for activation of ASTER are understood to be as follows:

60.1 Commanding Requirements

Commands required for activation and normal operations are predefined in the database (I&T and EOC).

60.1.1 Special Command Sequences

At least TBD command sequences are required for the initial activation checkout steps planned for ASTER.

60.1.2 Special Command Constraints

The EOC TBD mode transmission are used for all ASTER commands not defined in the database.

60.1.3 Real-time Command Generation

There are TBD special real-time command generation requirements for ASTER activation. All normal real-time command generation capabilities (defined in 20.4) are required.

60.1.4 Special Command Transmission Requirements

TBD.

60.2 Telemetry Processing Requirements

TBD

60.2.1 Special Telemetry Formats

There are no special telemetry formats identified for ASTER.

60.2.2 Special Processing Functions

TBD

60.2.3 Special Processing Parameters

TBD

60.2.4 Special Displays

ASTER science functions are an ASTER ICC responsibility.

60.2.5 Strip Chart Recorder

TBD

60.3 Remote Support Coordination Requirements

TBD

60.3.1 Quick-look Playback Handling

Access to quick-look data is provided via the TBD.

60.3.2 Voice Communications

Voice communications are required between ASTER activation position within the EOC, the ASTER ICC, and remote terminal facility (TBD) throughout ASTER activation.

60.4 Facility Requirements

The ASTER ICC/TL requires access to TBD standard instrument activation position within the EOC, and standard office-type working space and services for a TBD activation staff.

APPENDIX VII

70 ASTER OPERATION MODES

ASTER Operation Modes are as follows:

70.1 ASTER Operation Modes TABLE V (JAROS TABLE 70.1-1)

TABLE 70.1-1 ASTER OPERATING MODES (1 of 2) [Added by JAROS]

ASTER OPERATING MODE		SUBSYSTEM OPERATING MODE					DATA RATE (Mbps)
		VNIR	SWIR	TIR	CSP	MPS	
OBS	FULL	OBS	OBS	OBS	V/S/T OBS	28V/120V ON	89.200 peak
	VNIR	OBS	STANDBY 1	STANDBY	VNIR OBS	28V/120V ON	62.038 peak
	V/STEREO	OBS	STANDBY 1	STANDBY	VDEM OBS	28V/120V ON	31.019 peak
	TIR	STANDBY	STANDBY 1	OBS	TIR OBS	28V/120V ON	4.109 peak
	SWIR/TIR	STANDBY	OBS	OBS	S/T OBS	28V/120V ON	27.162 peak
VNIR-CAL	PRE-CAL	PRE-CAL	STANDBY 1	STANDBY	STANDBY	28V/120V ON	0
	OPT-CAL	OPT-CAL	STANDBY 1	STANDBY	VNIR-CAL	28V/120V ON	62.038 peak
	DARK-CAL	DARK-CAL	STANDBY 1	STANDBY	VNIR-CAL	28V/120V ON	62.038 peak
	EL-CAL	ELE-CAL	STANDBY 1	STANDBY	VNIR-CAL	28V/120V ON	62.038 peak
SWIR-CAL	PRE-CAL	STANDBY	PRE-CAL	STANDBY	STANDBY	28V/120V ON	0
	OPT-CAL	STANDBY	OPT-CAL	STANDBY	SWIR-CAL	28V/120V ON	23.053 peak
	DARK-CAL	STANDBY	DARK-CAL	STANDBY	SWIR-CAL	28V/120V ON	23.053 peak
V/S-CAL	PRE-CAL	PRE-CAL	PRE-CAL	STANDBY	STANDBY	28V/120V ON	0
	OPT-CAL	OPT-CAL	OPT-CAL	STANDBY	V/S-CAL	28V/120V ON	85.091 peak
	DARK-CAL	DARK-CAL	DARK-CAL	STANDBY	V/S-CAL	28V/120V ON	85.091 peak
TIR-LONG TERM CAL	PRE-CAL	STANDBY	STANBY 1	PRE-CAL	STANDBY	28V/120V ON	0
	OPT-CAL	STANDBY	STANDBY 1	OPT-CAL	TIR-CAL	28V/120V ON	4.109 peak
	EL-CAL	STANDBY	STANDBY 1	ELE-CAL	TIR-CAL	28V/120V ON	4.109 peak
TIR SHORT TERM CAL	CAL-1	STANDBY	STANDBY 1	SHORT-TERM CAL	TIR-CAL	28V/120V ON	4.109 peak
	CAL-2	STANDBY	PREP	SHORT-TERM CAL	TIR-CAL	28V/120V ON	4.109 peak
POINTING	VNIR	POINTING	STANDBY 1	STANDBY	STANDBY	28V/120V ON	0
	SWIR	STANDBY	POINTING	STANDBY	STANDBY	28V/120V ON	0
	TIR-POINTING 1	STANDBY	STANDBY 1	POINTIN	TIR PREP (TIR CLOCK)	28V/120V ON	0
	TIR-POINTING 2	STANDBY	PREP	POINTING	TIR PREP (TIR CLOCK)	28V/120V ON	0
STANDBY	STANDBY 1	STANDBY	STANDBY 1	STANDBY	STANDBY	28V/120V ON	0
	STANDBY 2	STANDBY	STANDBY 2	STANDBY	STANDBY	28V/120V ON	0

TABLE V (continued) [JAROS TABLE 70.1-1]

TABLE 70.1-1 ASTER OPERATING MODES (2 of 2) [Added by JAROS]

ASTER OPERATING MODE			SUBSYSTEM OPERATING MODE					DATA RATE (Mbps)
			VNIR	SWIR	TIR	CSP	MPS	
ALL OFF			ALL OFF	ALL OFF	ALL OFF	ALL OFF	ALL OFF	0
LAUNCH			LAUNCH	LAUNCH	LAUNCH	SURVIVAL	SURVIVAL (TBD)	0
LAUNCH-LOCK OFF			LAUNCH-LOCK OFF	TBD	LAUNCH-LOCK OFF	STANDBY (TBD)	28V/120V ON (TBD)	0
SAFE			STANDBY (TBD)	STANDBY 1 (TBD)	STANDBY (TBD)	STANDBY (TBD)	28V/120V ON (TBD)	0
SURVIVAL			SURVIVAL	SURVIVAL	SURVIVAL	SURVIVAL	SURVIVAL	0
OTHER MODES	COOL-DOWN		STANDBY	STANDBY 1 (COOL-DOWN)	STANDBY (COOLDOWN)	STANDBY	28V/120V ON	0
	PREP 1	TIR PREP 1	STANDBY	STANDBY 1	SHORT-TERM CAL (PREP)	STANDBY	28V/120V ON	0
		TIR SHORT TERM CAL 1	STANDBY	STANDBY 1	SHORT-TERM CAL	TIR CAL	28V/120V ON	4.109 peak
	PREP 2	STANDBY 2	STANDBY	STANDBY 2	STANDBY	STANDBY	28V/120V ON	0
		TIR PREP 2	STANDBY	STANDBY 2	SHORT-TERM CAL (PREP)	STANDBY	28V/120V ON	0
		S/T PREP	STANDBY	PREP	SHORT-TERM CAL (PREP)	STANDBY	28V/120V ON	0
		TIR SHORT TERM CAL 2	STANDBY	PREP	SHORT-TERM CAL	TIR CAL	28V/120V ON	0
		TIR POINTING 2	STANDBY	PREP	POINTING	TIR PREP (TIR CLOCK)	28V/120V ON	0
	TIR GETTER	TIR GETTER OFF	STANDBY (TBD)	STANDBY 1 (TBD)	GETTER OFF	STANDBY	28V/120V ON	0
		TIR GETTER ON	STANDBY (TBD)	STANDBY 1 (TBD)	GETTER ON	STANDBY	28V/120V ON	0
	TIR COOL-DOWN		STANDBY (TBD)	STANDBY 1 (TBD)	STANDBY (COOL-DOWN)	STANDBY	28V/120V ON	0

Remarks)

CAL;	CALIBRATION
PREP;	PREPARATION
V;	VNIR
S;	SWIR
T;	TIR
V/S;	VNIR and SWIR
V/S/T;	VNIR, SWIR and TIR
EL;	ELECTRIC
OPT;	OPTICAL,
OBS;	OBSERVATION

(This page intentionally left blank)

(This page intentionally left blank)

APPENDIX VIII

80 ABBREVIATIONS

ACE	Attitude Control Electronics
ADAC	Attitude Determination and Control
ADADS	ASTER Data Archive and Distribution Subsystem
ADN	ASTER Data Network
AOS	ASTER Operation Segment
APID	Application Process Identifier
ARC	Ames Research Center
ARIA	Advanced Range Instrumented Aircraft
ASTER	Advanced Spaceborne Thermal Emission and Reflection
ATC	Absolute Time Command
BDD	Baseline Description Document
BDU	Bus Data Unit
C&DH	Command & Data Handling
CADU	Channel Access Data Unit
CCSDS	Consultative Committee For Space Data Systems
CERES	Clouds and Earth's Radiant Energy System
CLTU	Command Link Transmission Unit
CMD	Command
COMM	Communications Subsystem
CSMS	Communication and System Management Segment
CSP	Common Signal Processor
CTIU	Command and Telemetry Interface Unit
C&T	Command and Telemetry
DAA	Data Acquisition Assembly
DAAC	Distributed Active Archive Center
DADS	Data Archive and Distribution System
DAR	Data Acquisition Request
DAS	Direct Access System
DB	Direct Broadcast
DCU	Data Control Unit
DDL	Direct Downlink
DDS	Direct Downlink System
DMU	Data Memory Unit
DP	Direct Playback
DPS	Data Processing Subsystem
DSN	Deep Space Network

ECS	EOSDIS Core System
ECOM	EOS Communication Network
ECS	EOSDIS Core System
EDOS	EOS Data and Operations System
EDU	Error Detection and Correction Data Unit
EOC	EOS Operations Center
EOS	Earth Observing System
EOS-AM	Earth Observing System - 10:30 descending node orbit
EOSDIS	EOS Data and Information System
EPS	Electrical Power System
ESDIS	Earth Science Data and Information System
ESN	ESDIS Science Network
FDF	Flight Dynamics Facility
FDIR	Failure Detection, Isolation and Recovery
FIFO	First In First Out
FOS	Flight Operations Segment
FOT	Flight Operations Team
FOV	Field of View
FPSG	Flight Planning and Scheduling Group
GDS	Ground Data System
GIIS	General Instrument Interface Specification
GN	Ground Network
GN&CS	Guidance, Navigation and Control Subsystem
GSMS	Ground System Management System
GSFC	Goddard Space Flight Center
HGA	High Gain Antenna
I & T	Integration and Test
ICC	Instrument Control Center
ICD	Interface Control Document
IFOU	Instrument Flight Operations Understanding
IMC	Information Management Center
IMS	Information Management System
IST	Instrument Support Terminal
IWG	Investigator Working Group
JAROS	Japan Resources Observation System Organization
JPL	Jet Propulsion Laboratory
Kbps	Kilobits per Second
KSA	Ku-Band Single Access

LTIP	Long Term Instrument Plan
LTSP	Long Term Science Plan
Mbps	Megabits per Second
MITI	Ministry of International Trade and Industry
MISR	Multi-angle Imaging Spectro Radiometer
MO&DSD	Mission Operations and Data Systems Directorate
MODIS	Moderate Resolution Imaging Spectrometer
MOM	Mission Operations Manager
MOPITT	Measurements of Pollution in the Troposphere
MPS	Master Power Supply
MSFC	Marshall Space Flight Center
NASA	National Aeronautics and Space Administration
NASCOM	NASA Communications Network
NCC	Network Control Center
NIR	Near Infrared
NOAA	National Oceanic and Atmospheric Administration
NSI	NASA Science Internet
P/B	Playback
PGS	Product Generation System
PI	Principal Investigator
PSCN	Program Support Communications Network
RT	Remote Sensing
R/T	Real-Time
RAM	Random Access Memory
ROM	Read only Memory
RS	Reed-Solomon
RTCS	Relative Time Command Sequence
SAR	Schedule Add Request (TDRSS)
SCC	Spacecraft Controls Computer
SCF	Science Computing Facility
SCT	Stored Command Table
SDF	Software Development Facility
SDPS	Science Data Processing Segment
SFE	Science Formatting Equipment
SISS	Software Implementation Support Subsystem
SMA	S-Band Multiple Access
SMC	System Management Center
SN	Space Network
SSA	S-Band Single Access

SSR	Solid State Recorder
STGT	Second TDRSS Ground Terminal
SWIR	Short Wave Infrared
TBD	To Be Determined
TBR	To Be Reviewed
TBS	To Be Supplied
TDRS	Tracking and Data Relay Satellite
TDRSS	Tracking and Data Relay Satellite System
TIR	Thermal Infrared Radiometer
TL	Team Leader
TLM	Telemetry
TM	Team Member
TMON	Telemetry Monitor
TONS	TDRSS Onboard Navigation System
TOO	Target of Opportunity
UTC	Universal Time Code
VCID	Virtual Channel Identifier
VCDU	Virtual Channel Data Unit
VNIR	Visible and Near Infrared
WOTS	Wallops Orbital Tracking Station
WSGT	White Sands Ground Terminal

Interface Control Drawing
Advanced Spaceborne Thermal Emission and Reflection Radiometer (ASTER) for EOS–AM Spacecraft
(UID–102)

Next Assembly	Used on
20008500G1	EOS–AM

st Application
)S–AM

Revisions		Rev 001	
Ltr	Description	Date	Approved
001	Draft	8/30/93	

Revision Record Continued on Sheet _____

Contract No.	NAS5–32500
Written	J. Cymerman
Date	
Approved	
Date	
Approved	
Date	

MARTIN MARIETTA
POST OFFICE BOX 800
PRINCETON, NEW JERSEY 08543–0800
TELEPHONE (609) 490–3400

Interface Control Drawing,
Earth Observing System AM Spacecraft to Advanced Spaceborne Thermal Emission and Reflection Radiometer

Size	Code Ident No.	
A	49671	20008810

Sheet 1 of 3

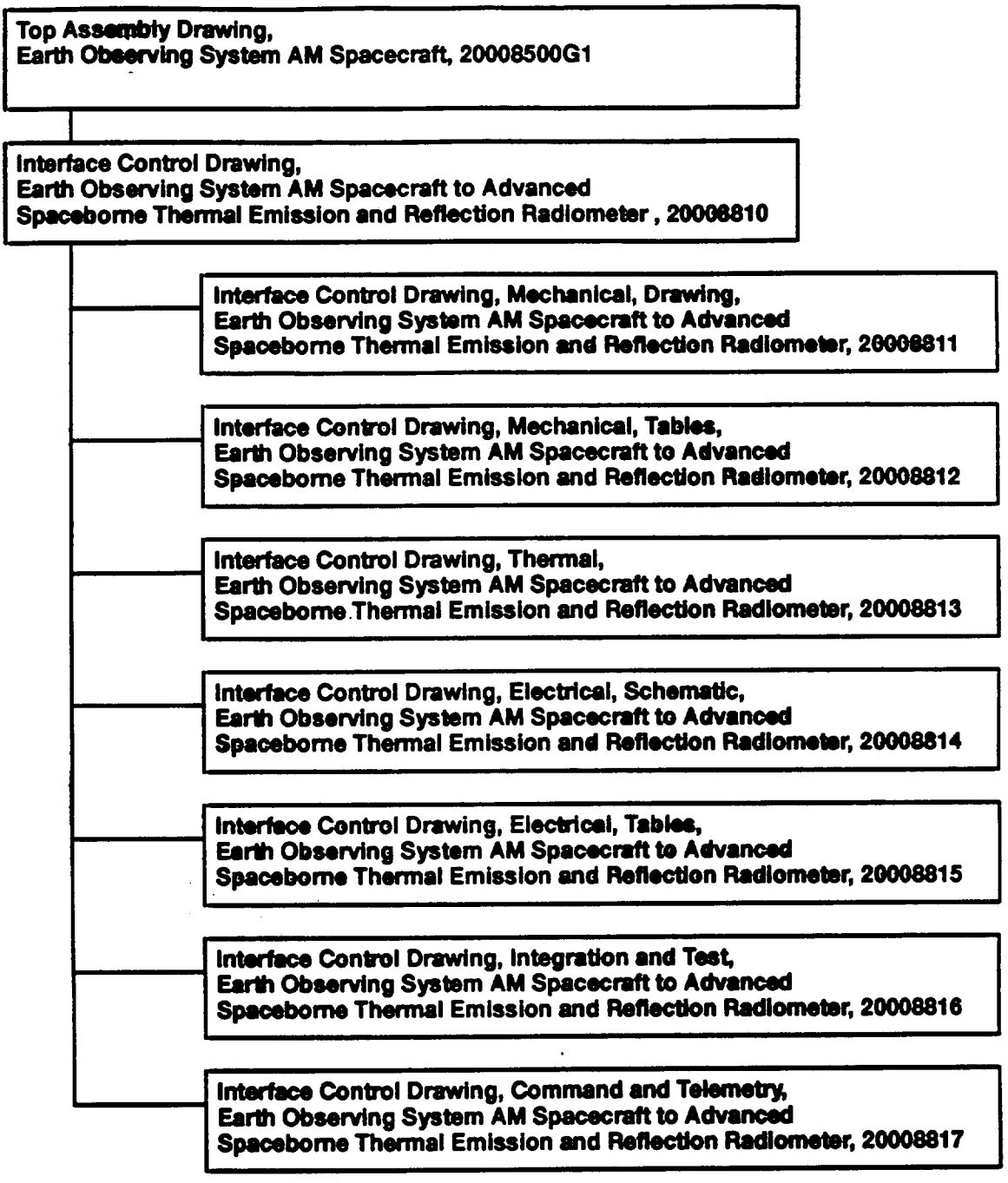

Figure 1. Drawing Tree

Table I. ICD Revision Status

20008811 MICD Drawing		20008812 MICD Tables		20008813 TICD		20008814 EICD Schematic		20008815 EICD Tables		20008816 I&T ICD		20008817 C&T ICD	
Issue	Date	Issue	Date	Issue	Date	Issue	Date	Issue	Date	Issue	Date	Issue	Date
Draft 001	08/26/93	Draft 001	08/06/03										

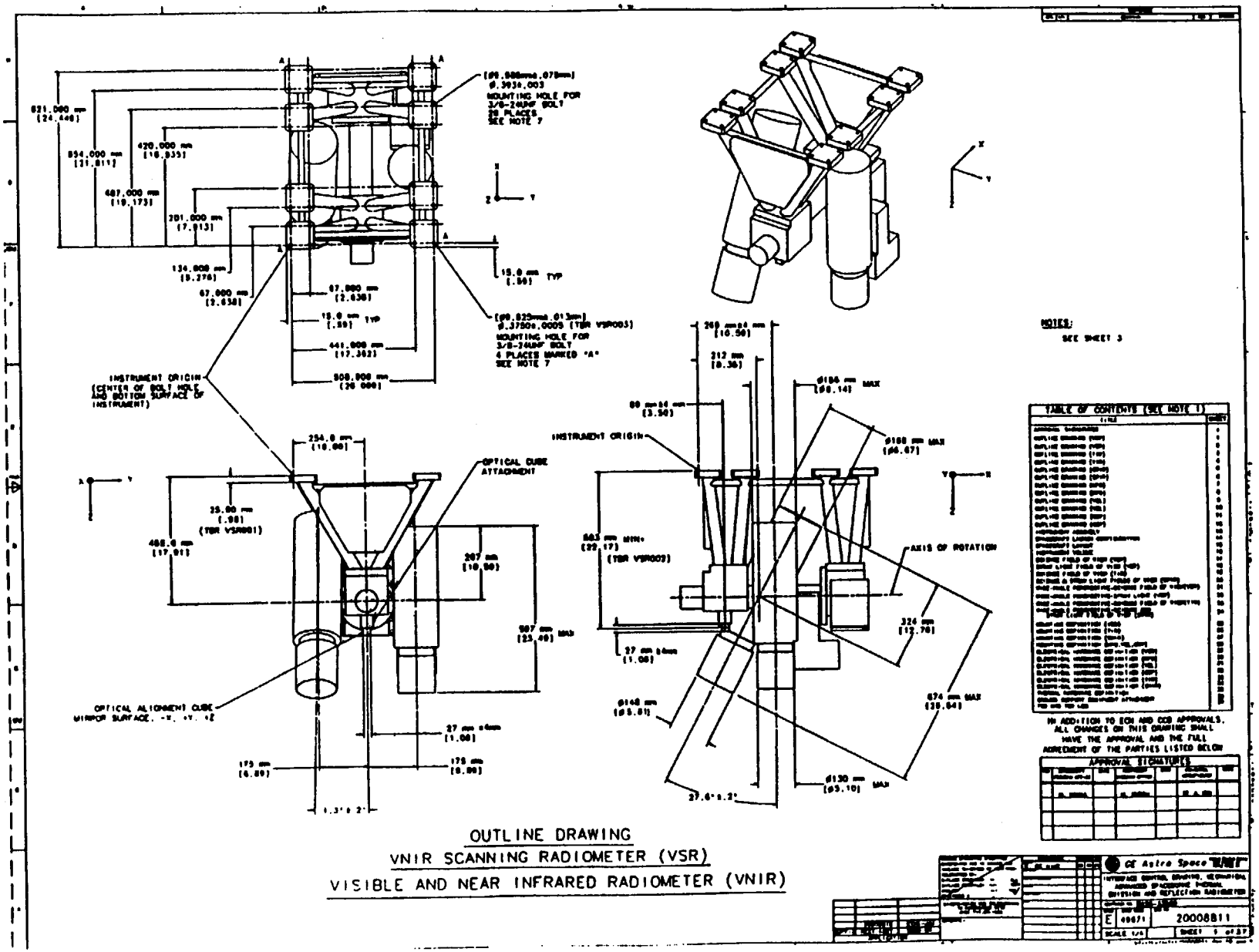

OUTLINE DRAWING

VNIR SCANNING RADIOMETER (VSR)

VISIBLE AND NEAR INFRARED RADIOMETER (VNIR)

20008811
30 August 1993

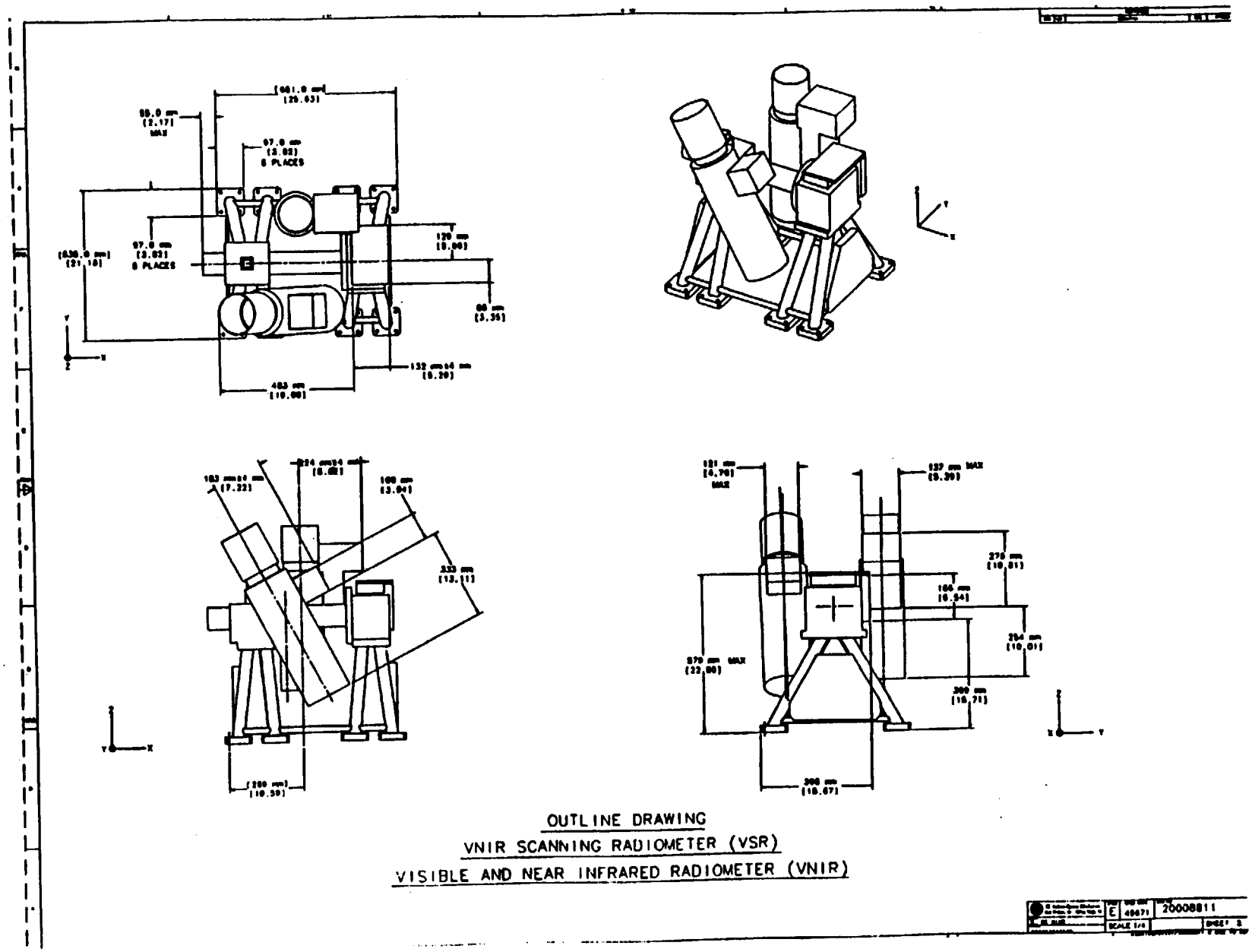

OUTLINE DRAWING

VNIR SCANNING RADIOMETER (VSR)

VISIBLE AND NEAR INFRARED RADIOMETER (VNIR)

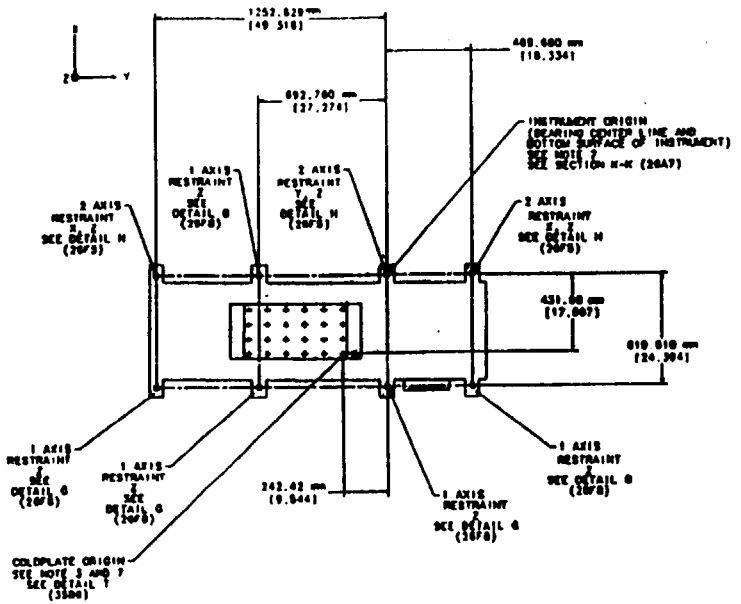

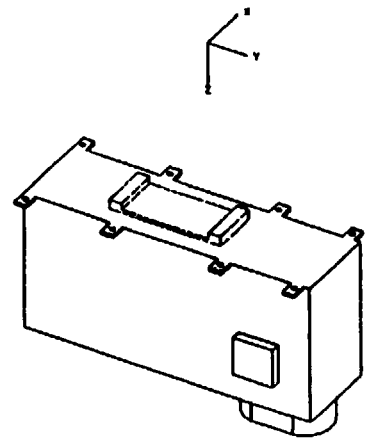

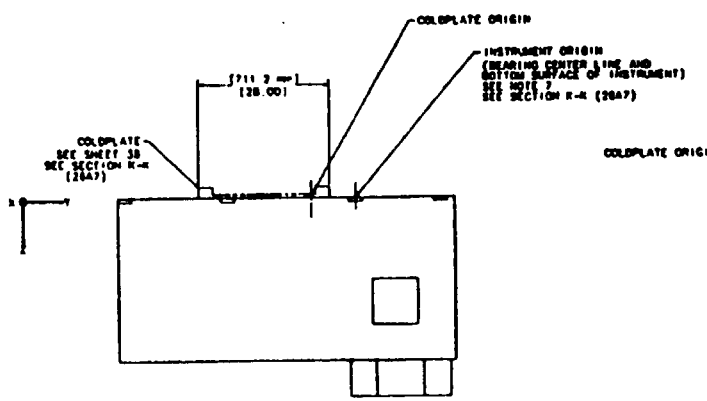

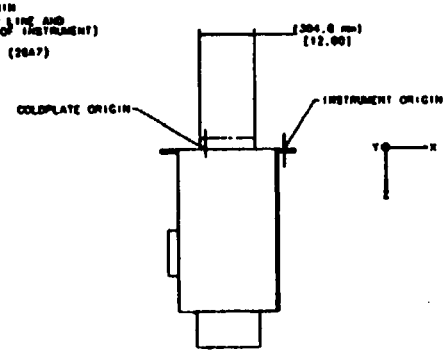

NOTES:

1. THE ASTER MECHANICAL INTERFACE INFORMATION IS CONTAINED IN TWO DOCUMENTS: THIS DRAWING AND 20008812, MICD TABLES.

2. THE ASTER INSTRUMENT IS COMPOSED OF THE FOLLOWING COMPONENTS:
   TIR- THERMAL INFRARED RADIOMETER
   SWIR- SHORT WAVE INFRARED RADIOMETER
   VNIR- VISIBLE AND NEAR INFRARED RADIOMETER
   COMPOSED OF TWO ASSEMBLIES:
   -VSR- VNIR SCANNING RADIOMETER
   -VEL- VNIR ELECTRONICS
   CSP- COMMON SIGNAL PROCESSOR
   UPS- MASTER POWER SUPPLY

3. THE SPACECRAFT COORDINATES ARE SHOWN. THE INSTRUMENT COORDINATE AXES ARE PARALLEL TO THE SPACECRAFT AXES, EXCEPT FOR THE TIR INSTRUMENT AND COLDPLATE, WHICH IS ROTATED ABOUT THE Z AXIS BY .30 ±.10 DEGREES (SEE SHEET 4).

4. UNLESS OTHERWISE SPECIFIED, THERMAL BLANKET ENVELOPE IS NOT TO EXCEED 12.7mm (0.50).

5. UNLESS OTHERWISE SPECIFIED, ALL DIMENSIONS ARE WITHOUT THERMAL BLANKET.

6. INDICATED DIMENSIONS INCLUDE ALLOWANCE FOR THERMAL BLANKET.

7. ALL COMPONENT INTERFACES SHALL BE DRILLED USING COORDINATED TOOLING.

8. UNLESS OTHERWISE SPECIFIED, BASIC DIMENSIONS ARE METRIC WITH TOLERANCES AS SHOWN BELOW:
   X PLACE ±1 mm
   X.X PLACE ±1 mm
   X.XX PLACES ±.50 mm
   X.XXX PLACES ±.250 mm
   ANGLES ±.5°
   FINISH 16/ MICROMETERS

   MAX DEFINES MAXIMUM ENVELOPE FOR CLEARANCE WITH OTHER EQUIPMENT.

   MIN USED TO DEFINE MAXIMUM ENVELOPE IN CONJUNCTION WITH OTHER DIMENSIONS.

   MAX+ SAME AS MAX. ALSO CONSIDERS ±2 mm ACCEPTABLE; CHOICE IS AT DISCRETION OF ASTER.

   MIN+ SAME AS MIN. ALSO CONSIDERS ±2 mm ACCEPTABLE; CHOICE IS AT DISCRETION OF ASTER.

9. UNITED STATES CUSTOMARY SYSTEM (USCS) UNITS ARE USED AS PRIMARY DIMENSIONS FOR LOCATING COMPONENTS ON THE EOS-AM SPACECRAFT AND DEFINING THE COLDPLATE ENVELOPE AND ITS MOUNTING INTERFACE. THE TOLERANCES, UNLESS OTHERWISE SPECIFIED, APPLICABLE TO USCS UNITS ARE SHOWN BELOW:
   X.X PLACE ±.06 INCH
   X.XX PLACES ±.01 INCH
   X.XXX PLACES ±.005 INCH
   ANGLES ±.5°
   FINISH 16/ MICROINCHES

NOTES CONTINUED ON SHEET 4

OUTLINE DRAWING

THERMAL INFRARED RADIOMETER (TIR)

	E	49671	20008811
SCALE 1/8			SHEET 3

20008811
30 August 1993

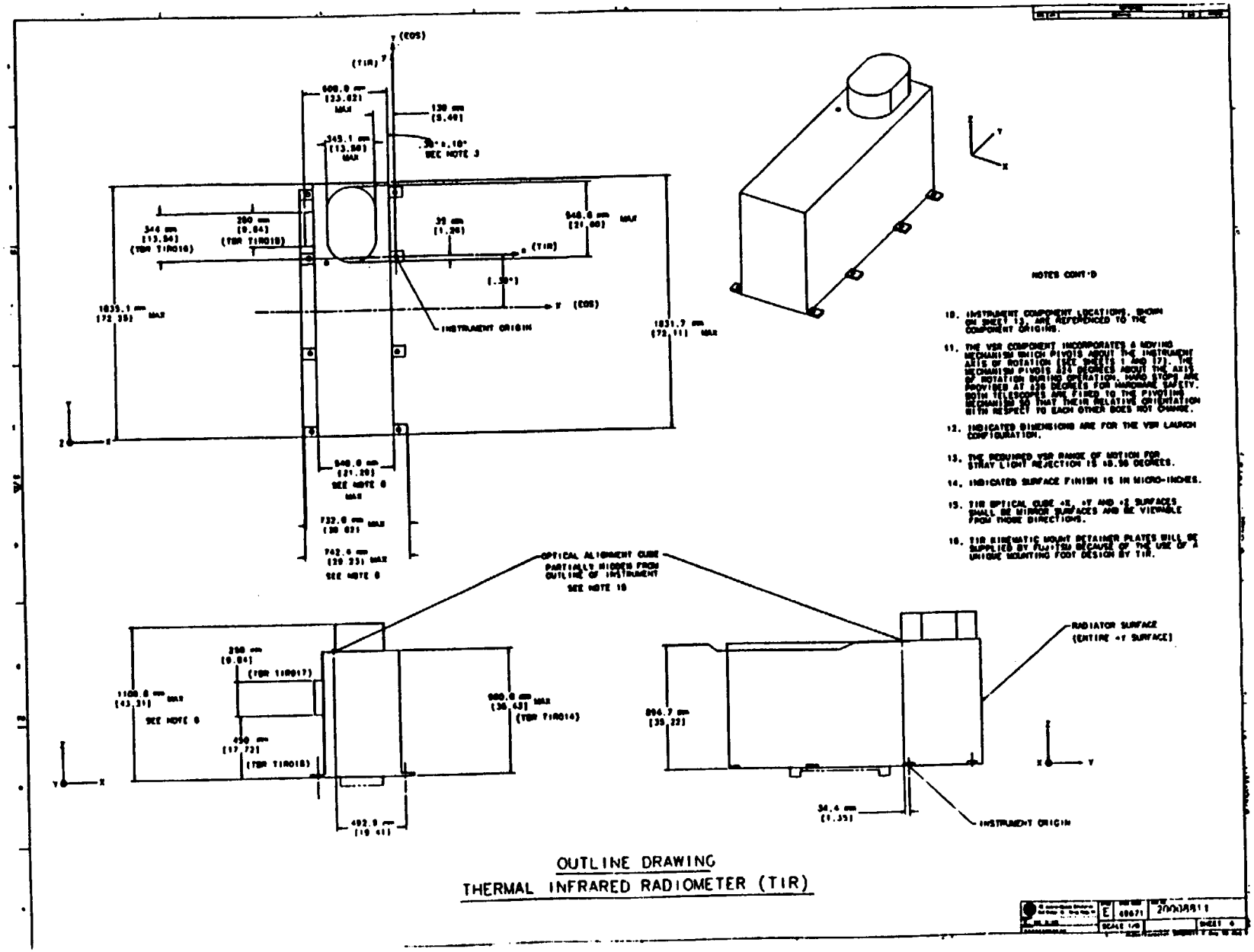
(COS)
(TIR)
600.0 mm [23.62] MAX
130 mm [5.40]
345.1 mm [13.58] MAX
SEE NOTE 3
344 mm [13.54] (TBR TIR016)
200 mm [0.84] (TBR TIR015)
35 mm [1.38]
548.0 mm [21.60] MAX
(TIR)
INSTRUMENT ORIGIN
1835.1 mm [72.35] MAX
1831.7 mm [72.11] MAX
(COS)
548.0 mm [21.20] SEE NOTE 6 MAX
732.0 mm [28.83] MAX
742.0 mm [29.23] MAX
SEE NOTE 6
NOTES CONT'D
10. INSTRUMENT COMPONENT LOCATIONS, SHOWN ON SHEET 13, ARE REFERENCED TO THE COMPONENT ORIGINS.
11. THE VSR COMPONENT INCORPORATES A MOVING MECHANISM WHICH PIVOTS ABOUT THE INSTRUMENT AXIS OF ROTATION (SEE SHEETS 1 AND 17). THE MECHANISM PIVOTS 270 DEGREES ABOUT THE AXIS OF ROTATION DURING OPERATION. HARD STOPS ARE PROVIDED AT 330 DEGREES FOR HARDWARE SAFETY. BOTH TELESCOPES ARE FIXED TO THE PIVOTING MECHANISM SO THAT THEIR RELATIVE ORIENTATION WITH RESPECT TO EACH OTHER DOES NOT CHANGE.
12. INDICATED DIMENSIONS ARE FOR THE VSR LAUNCH CONFIGURATION.
13. THE REQUIRED VSR RANGE OF MOTION FOR STRAY LIGHT REJECTION IS ±0.50 DEGREES.
14. INDICATED SURFACE FINISH IS IN MICRO-INCHES.
15. TIR OPTICAL CUBE +X, +Y AND +Z SURFACES SHALL BE MIRROR SURFACES AND BE VIEWABLE FROM THOSE DIRECTIONS.
16. TIR KINEMATIC MOUNT RETAINER PLATES WILL BE SUPPLIED BY FUJITSU BECAUSE OF THE USE OF A UNIQUE MOUNTING FOOT DESIGN BY TIR.
OPTICAL ALIGNMENT CUBE PARTIALLY HIDDEN FROM OUTLINE OF INSTRUMENT SEE NOTE 15
RADIATOR SURFACE (ENTIRE +Y SURFACE)
200 mm [0.84] (TBR TIR017)
1100.0 mm [43.31] MAX
SEE NOTE 6
450 mm [17.72] (TBR TIR018)
900.0 mm [35.43] MAX (TBR TIR014)
894.7 mm [35.23]
492.9 mm [19.41]
34.4 mm [1.35]
INSTRUMENT ORIGIN
OUTLINE DRAWING
THERMAL INFRARED RADIOMETER (TIR)
E
20008811
SCALE 1/8
SHEET 4

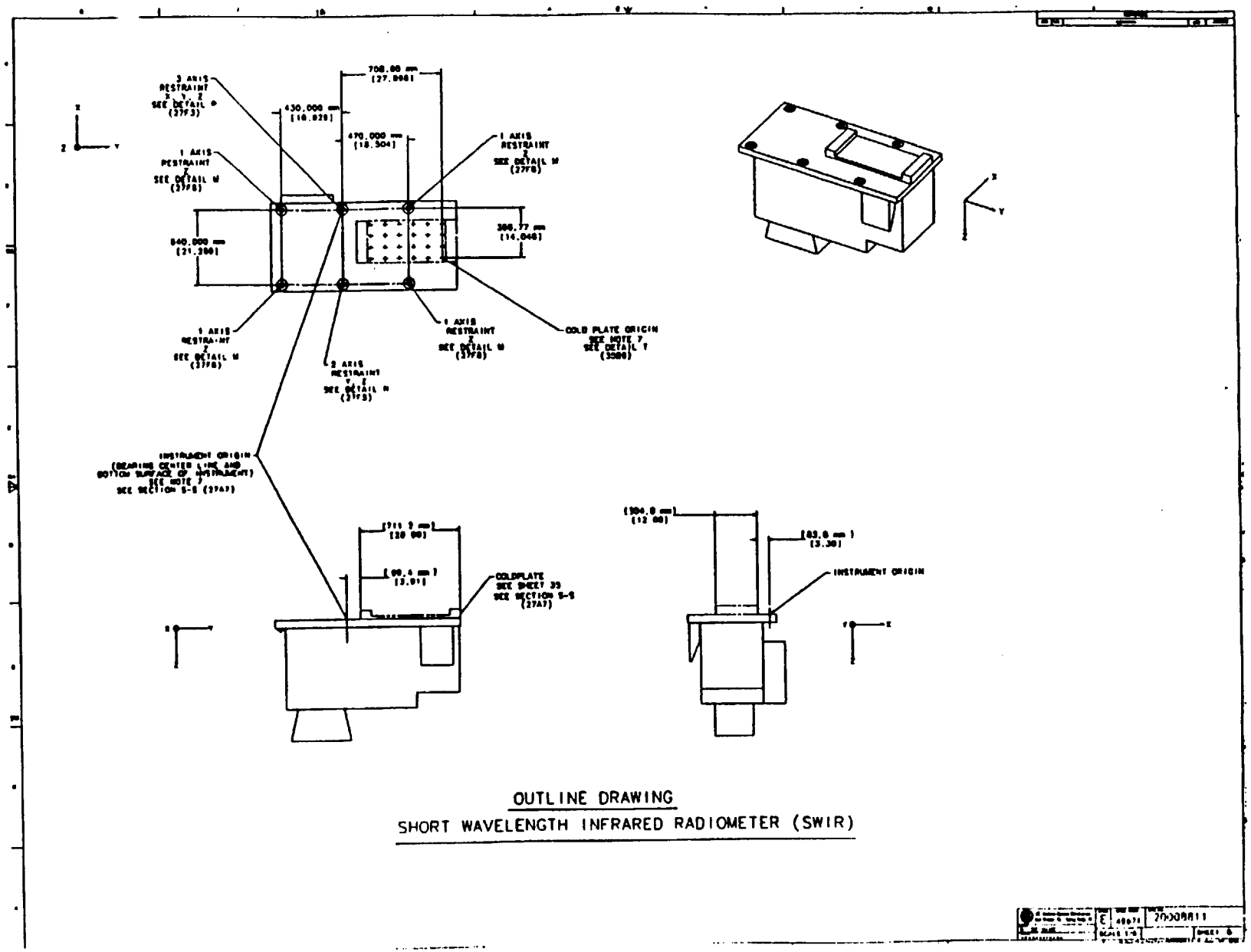

OUTLINE DRAWING

SHORT WAVELENGTH INFRARED RADIOMETER (SWIR)

20008811
30 August 1993

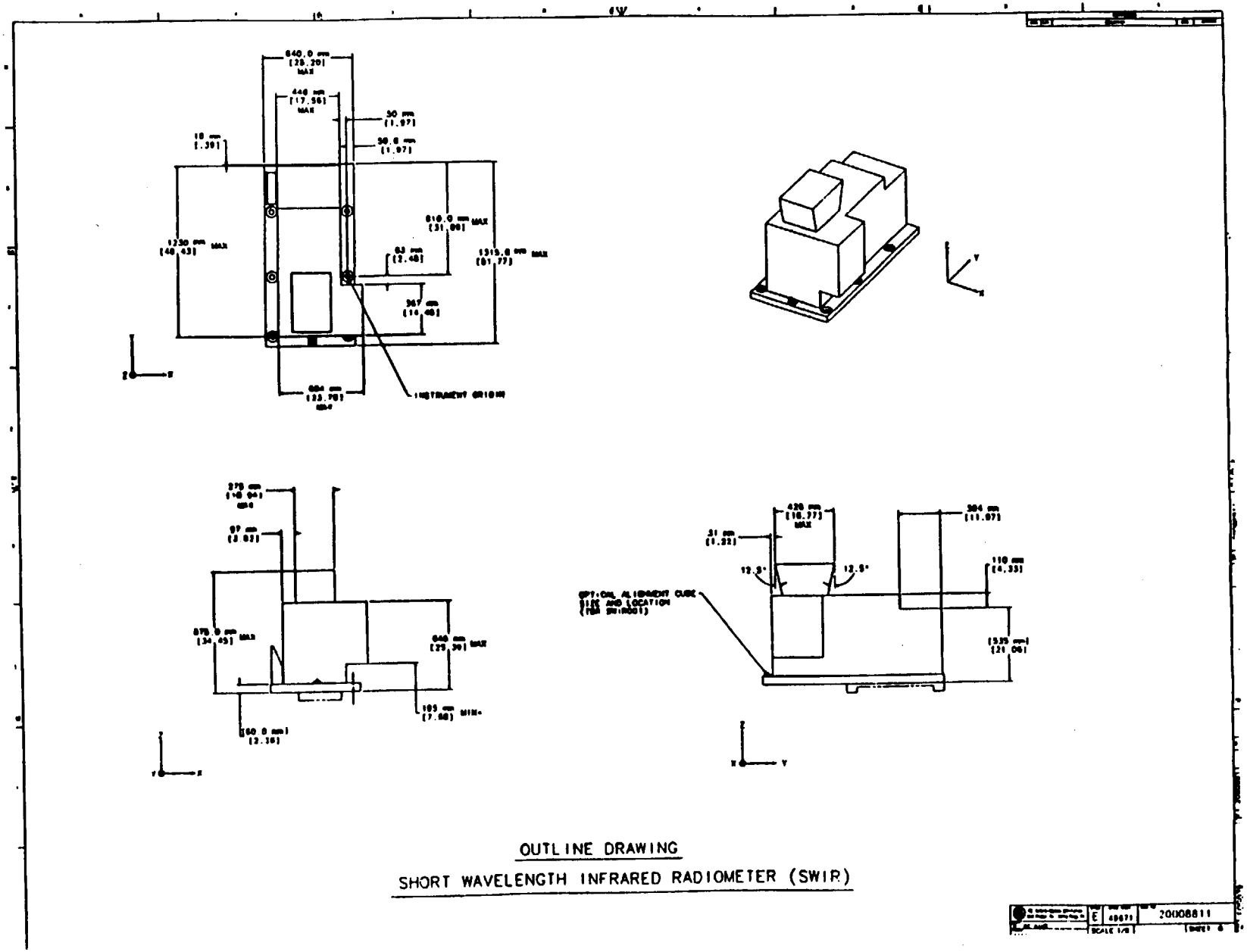

OUTLINE DRAWING

SHORT WAVELENGTH INFRARED RADIOMETER (SWIR)

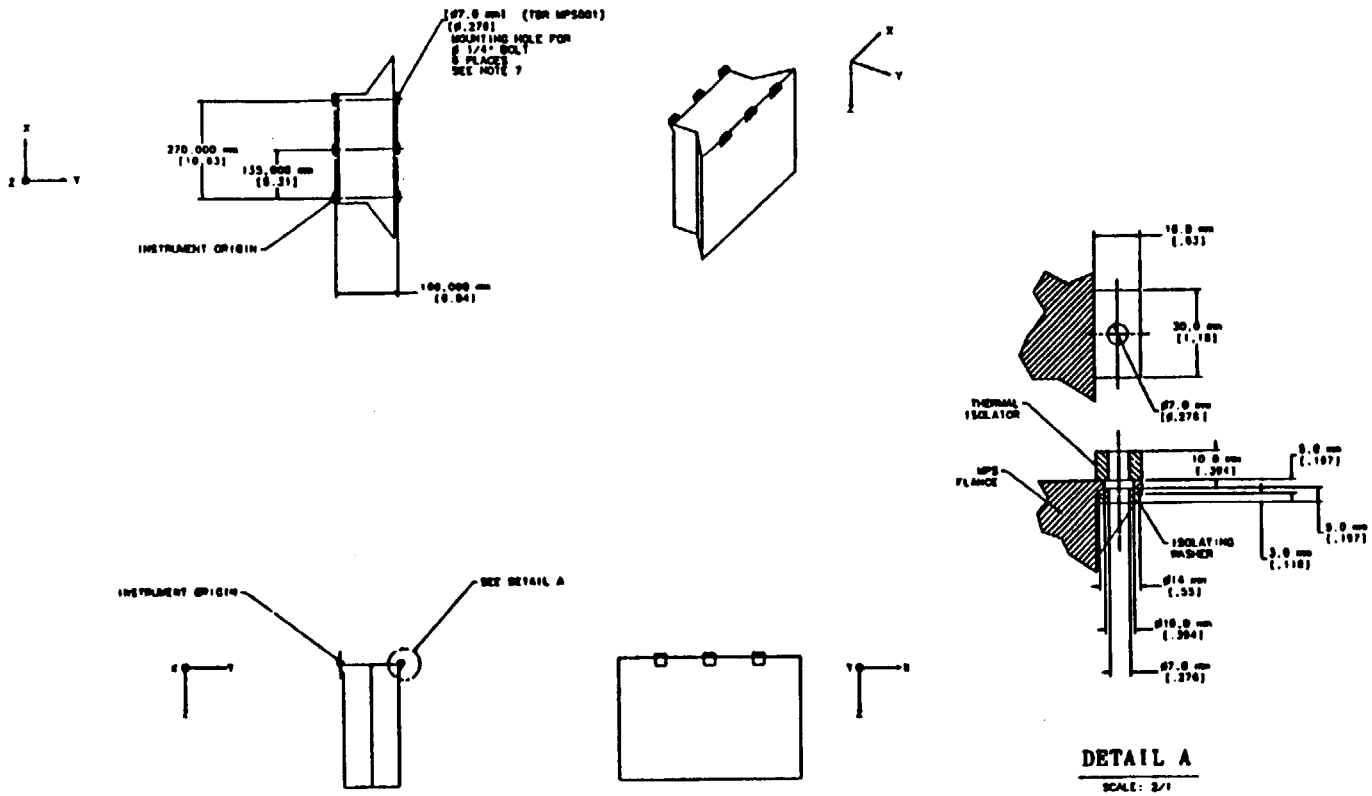

OUTLINE DRAWING

MASTER POWER SUPPLY (MPS)

20008811

30 August 1993

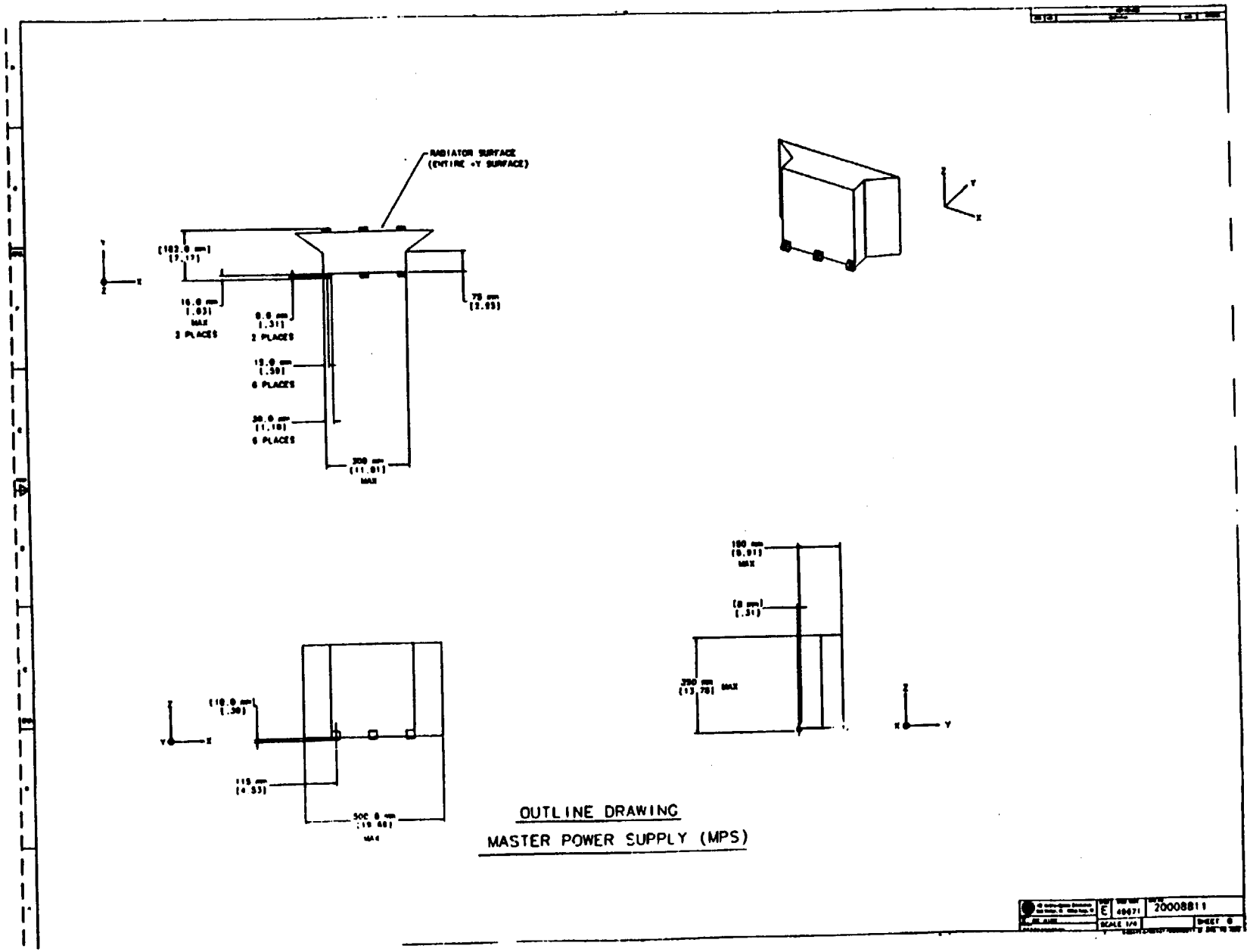
RADIATOR SURFACE
(ENTIRE +Y SURFACE)
2 PLACES
2 PLACES
6 PLACES
6 PLACES
OUTLINE DRAWING
MASTER POWER SUPPLY (MPS)
20008811

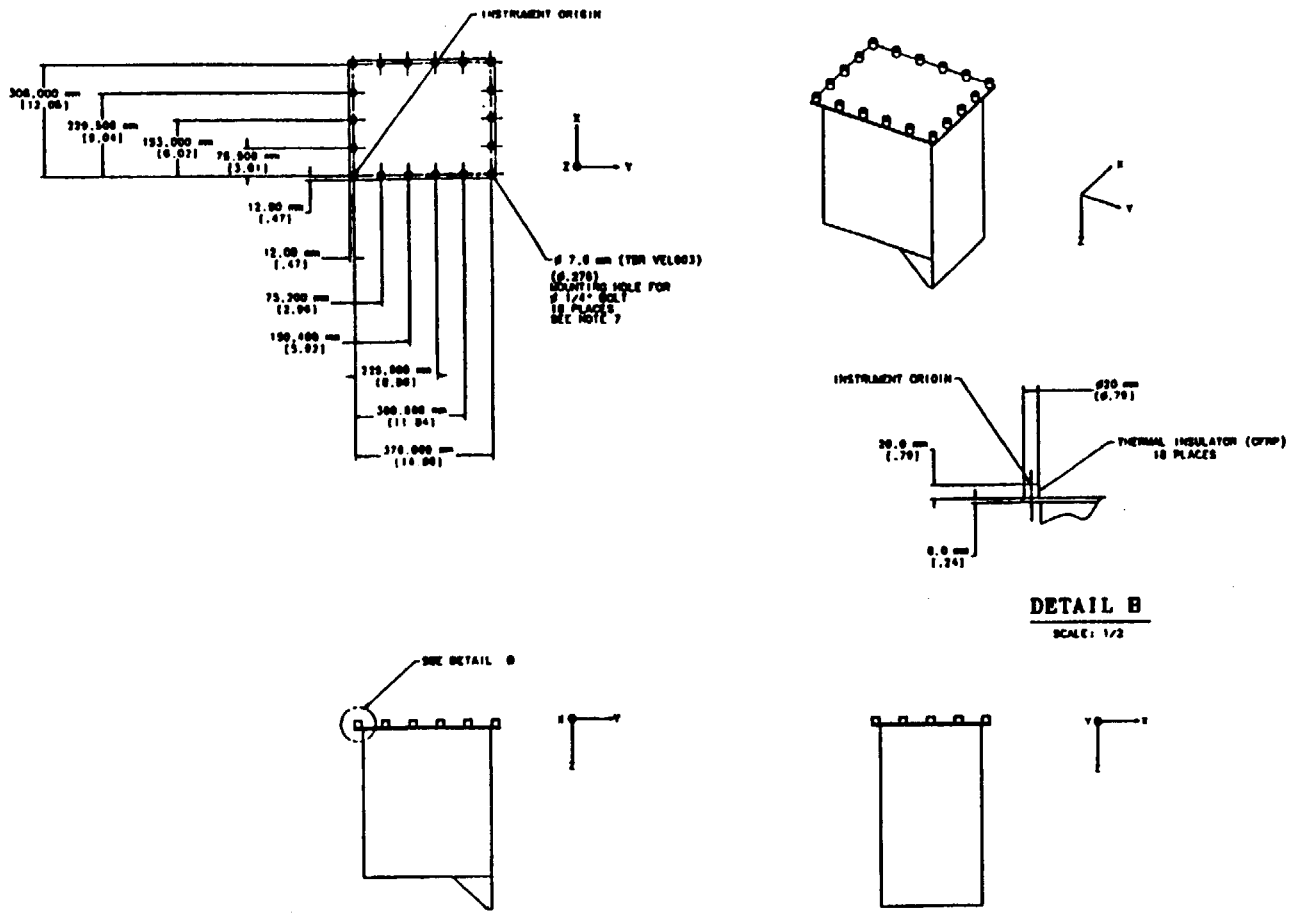

OUTLINE DRAWING

VNIR ELECTRONICS (VEL)

E | 496711 | 20008811

SCALE 1/2

20008811
30 August 1993

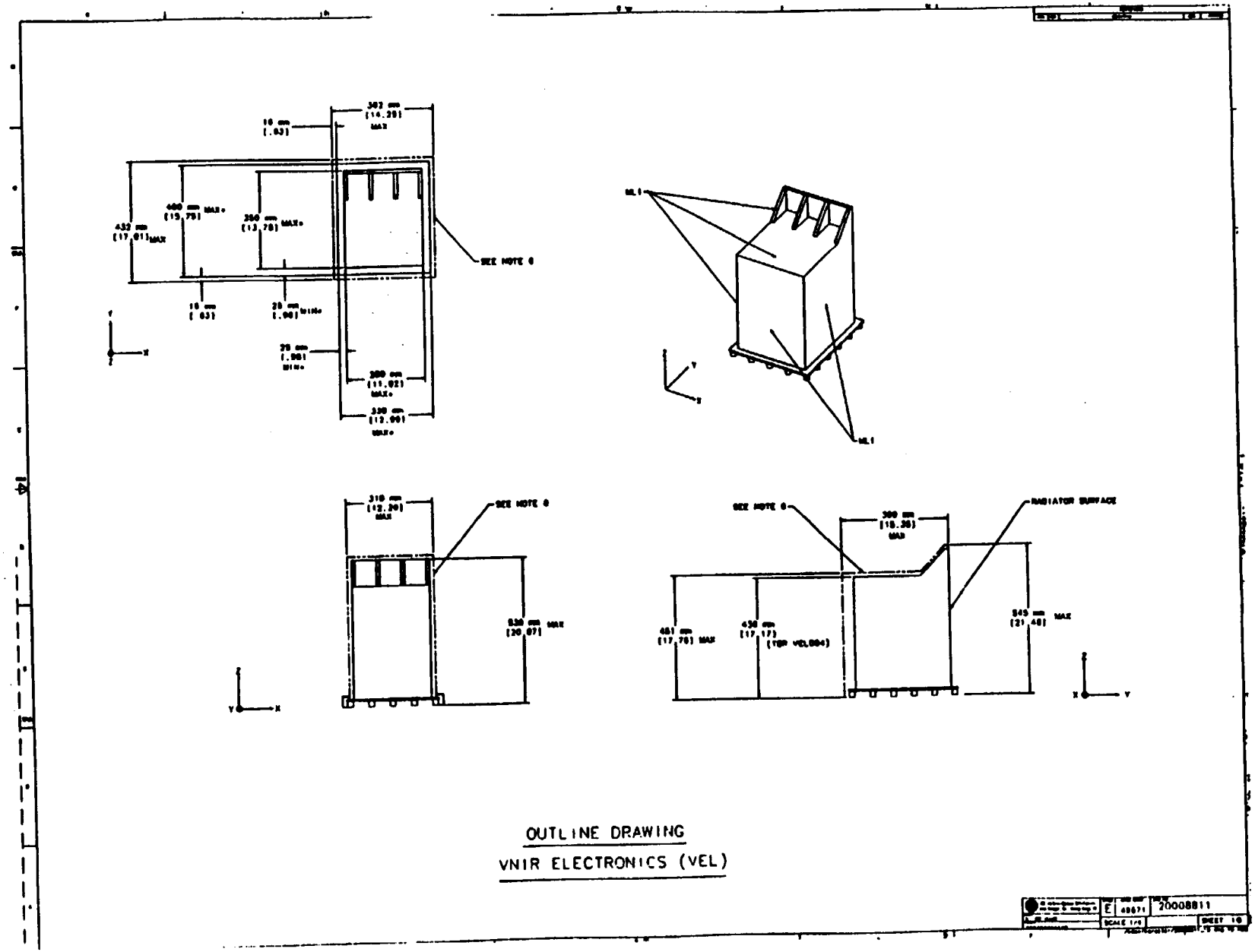

OUTLINE DRAWING

VNIR ELECTRONICS (VEL)

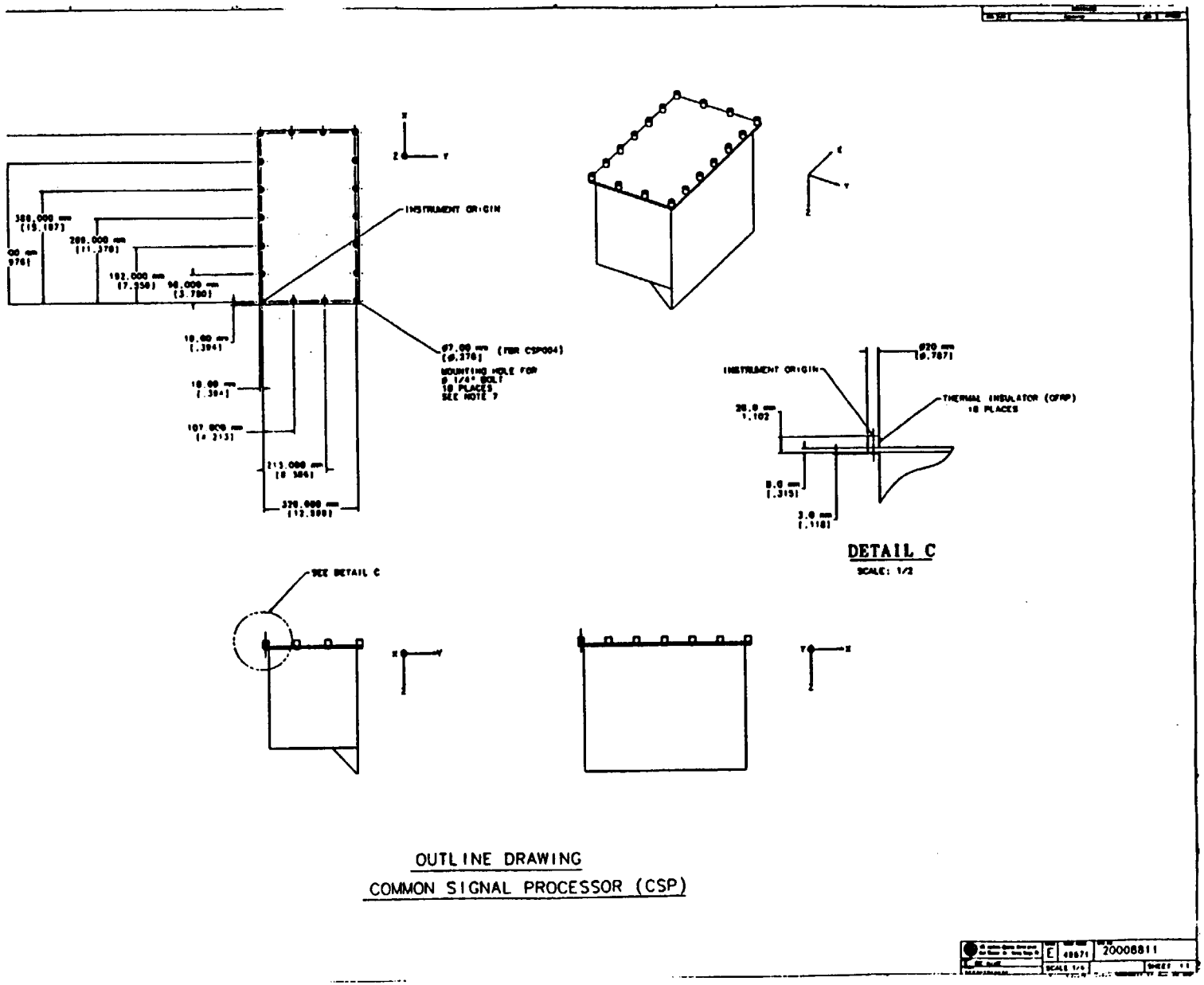

OUTLINE DRAWING
COMMON SIGNAL PROCESSOR (CSP)

20008811
30 August 1993

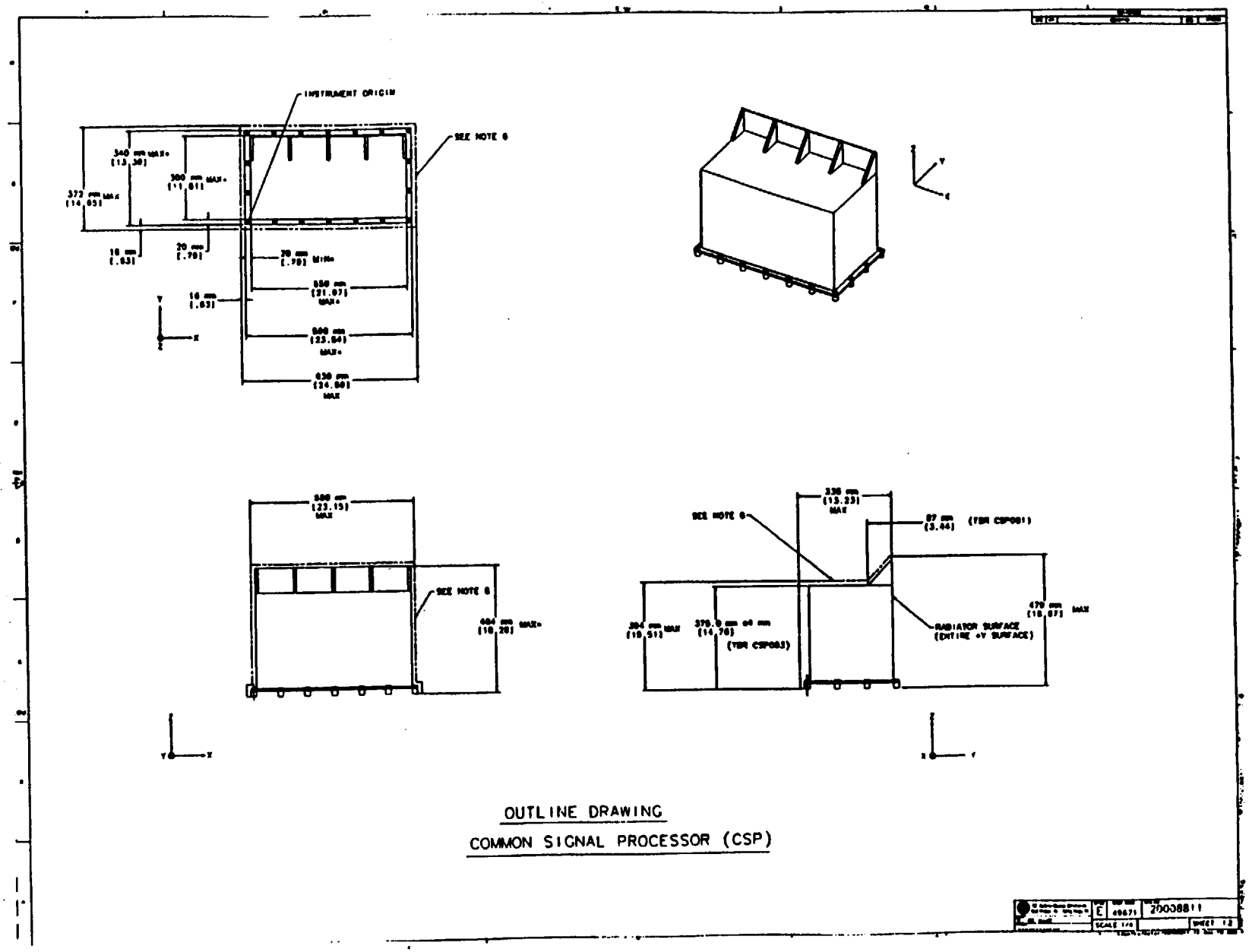

OUTLINE DRAWING

COMMON SIGNAL PROCESSOR (CSP)

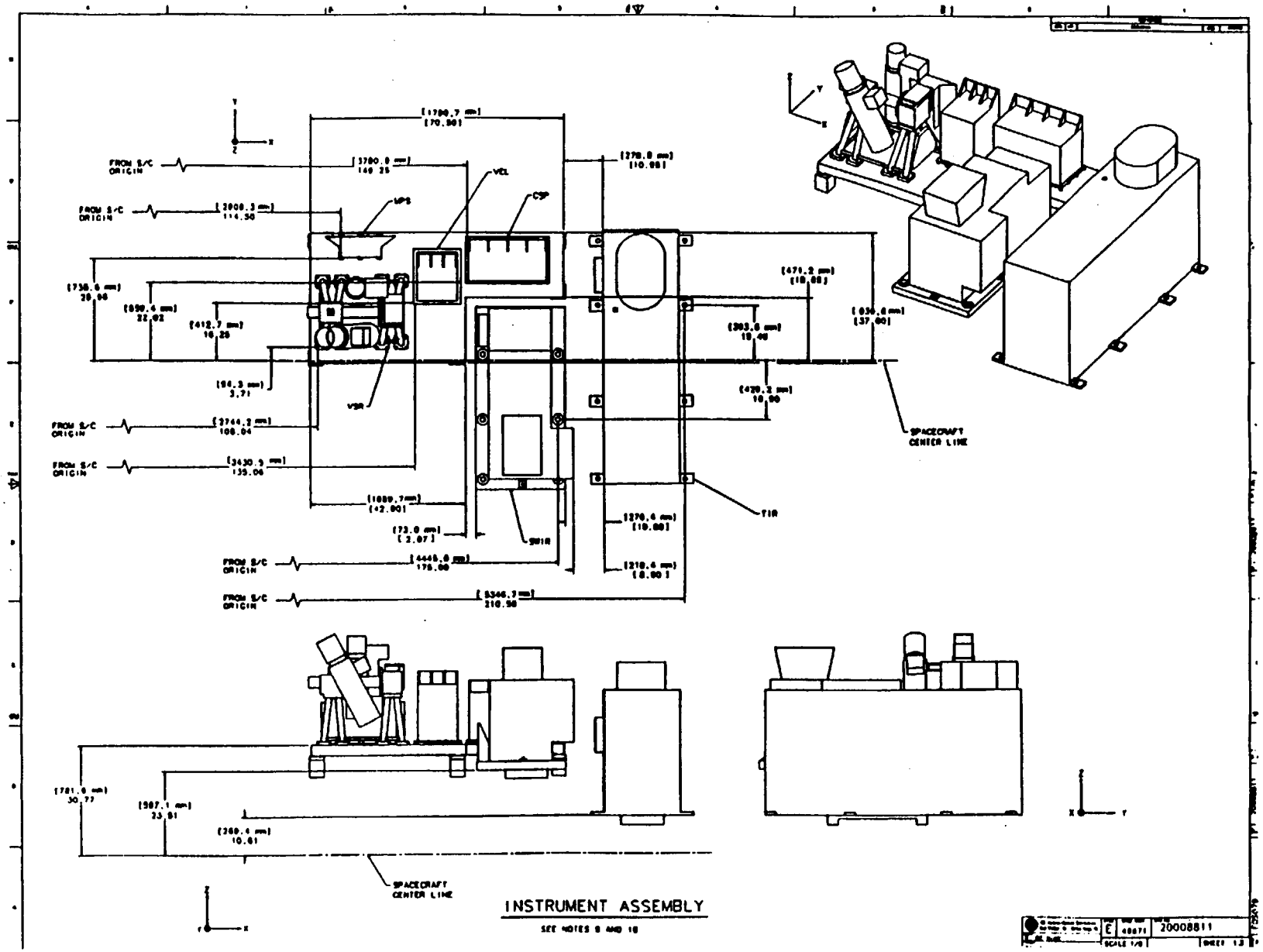

20008811
30 August 1993

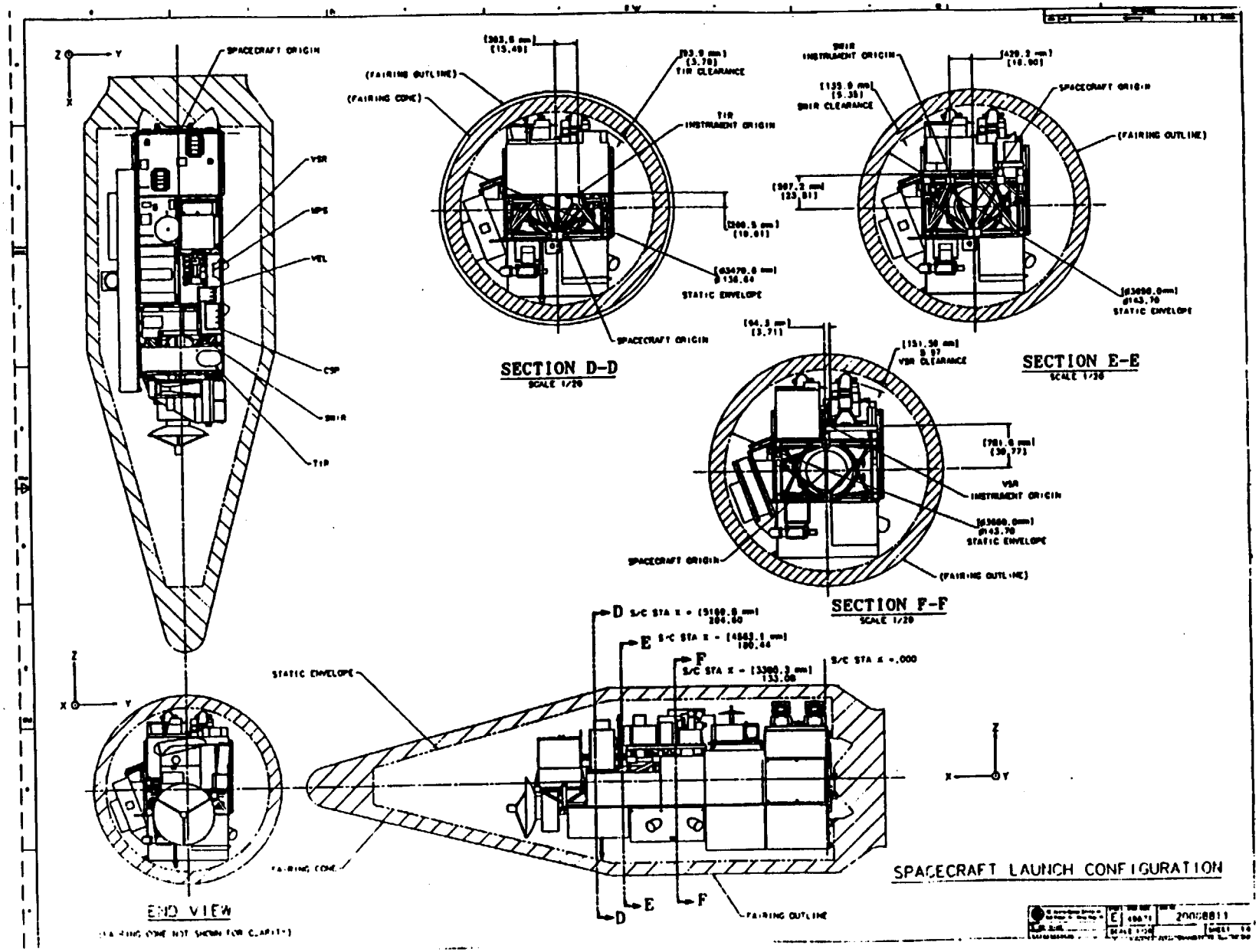
SPACECRAFT ORIGIN
VSR
MPS
VEL
CSP
SWIR
TIR
(FAIRING OUTLINE)
(FAIRING CONE)
TIR CLEARANCE
TIR INSTRUMENT ORIGIN
STATIC ENVELOPE
SPACECRAFT ORIGIN
SECTION D-D
SCALE 1/20
SWIR INSTRUMENT ORIGIN
SWIR CLEARANCE
SPACECRAFT ORIGIN
(FAIRING OUTLINE)
STATIC ENVELOPE
SECTION E-E
VSR CLEARANCE
VSR INSTRUMENT ORIGIN
STATIC ENVELOPE
SPACECRAFT ORIGIN
(FAIRING OUTLINE)
SECTION F-F
SCALE 1/20
STATIC ENVELOPE
FAIRING CONE
END VIEW
D
E
F
S/C STA X = .000
FAIRING OUTLINE
SPACECRAFT LAUNCH CONFIGURATION
20008811

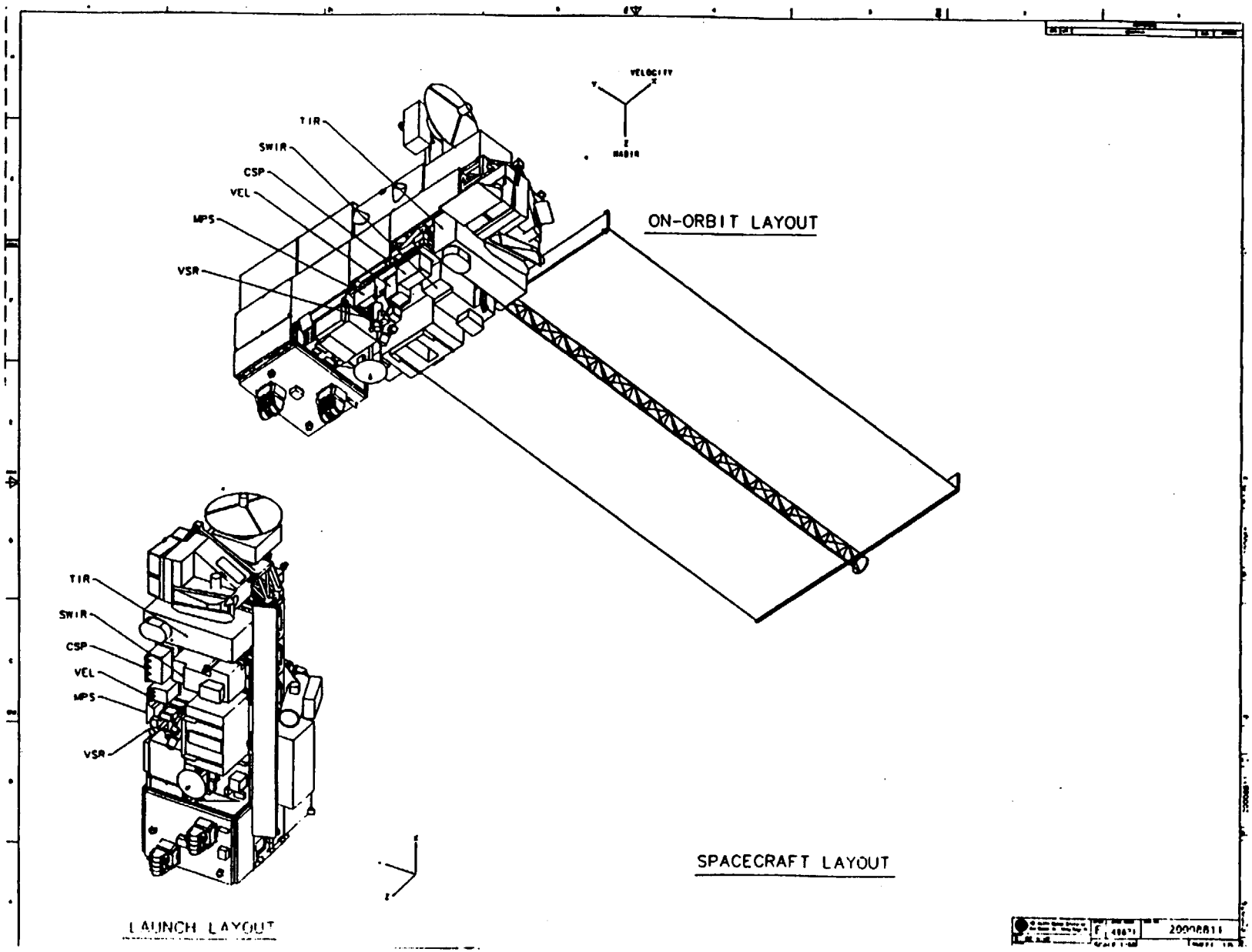

20008811
30 August 1993

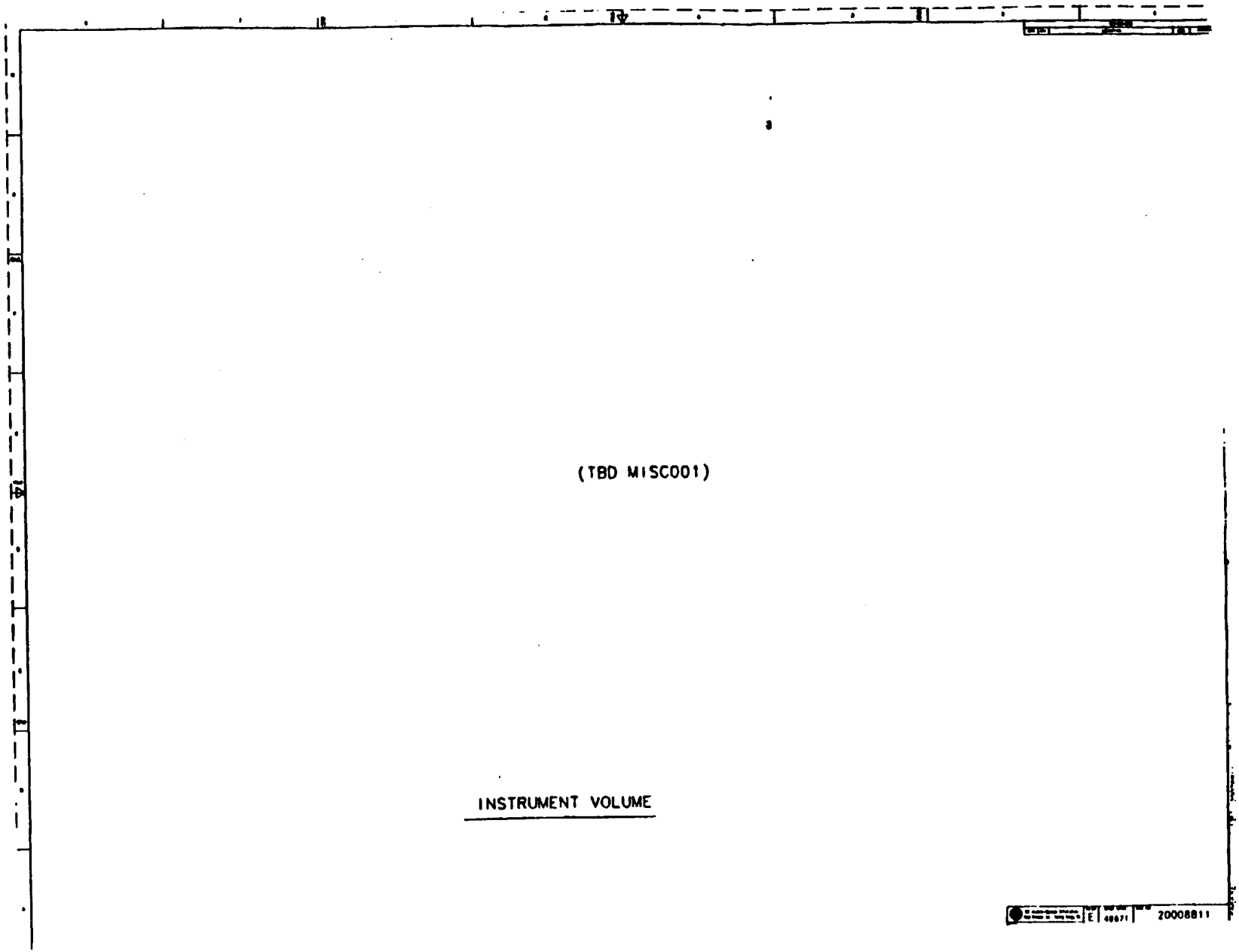
(TBD MISC001)
INSTRUMENT VOLUME
20008811

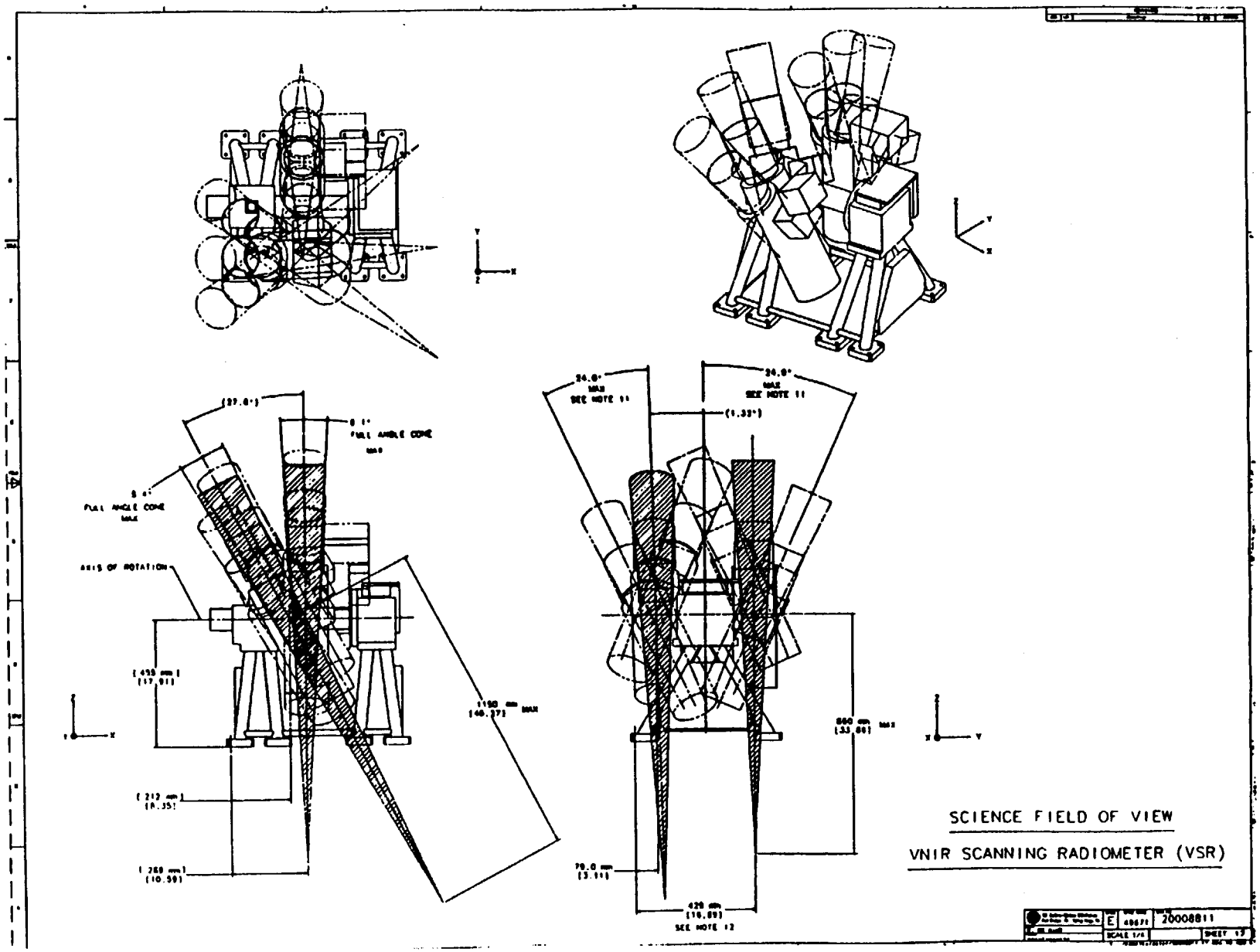

20008811
30 August 1993

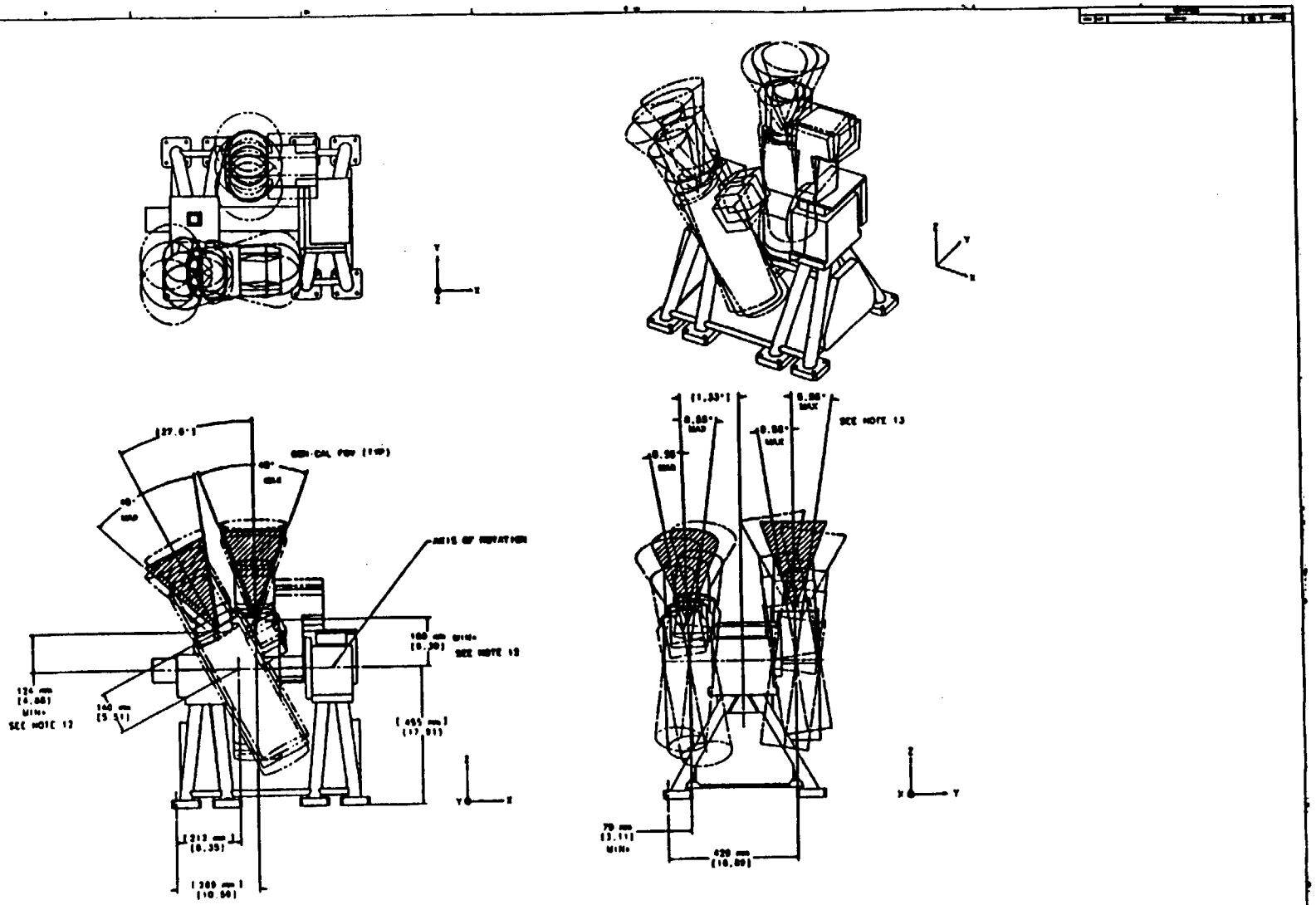

STRAYLIGHT FIELD OF VIEW

VNIR SCANNING RADIOMETER (VSR)

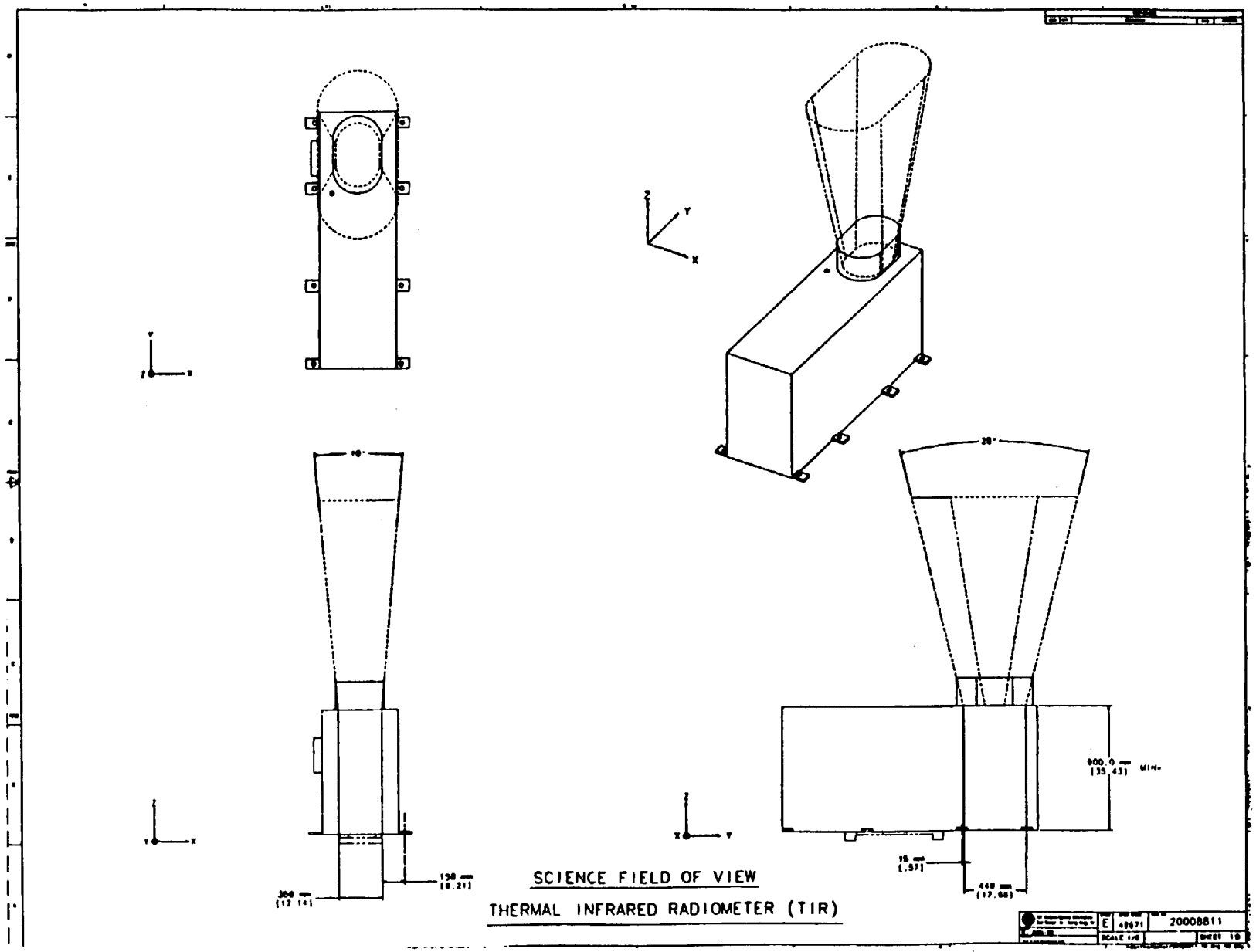

20008811
30 August 1993

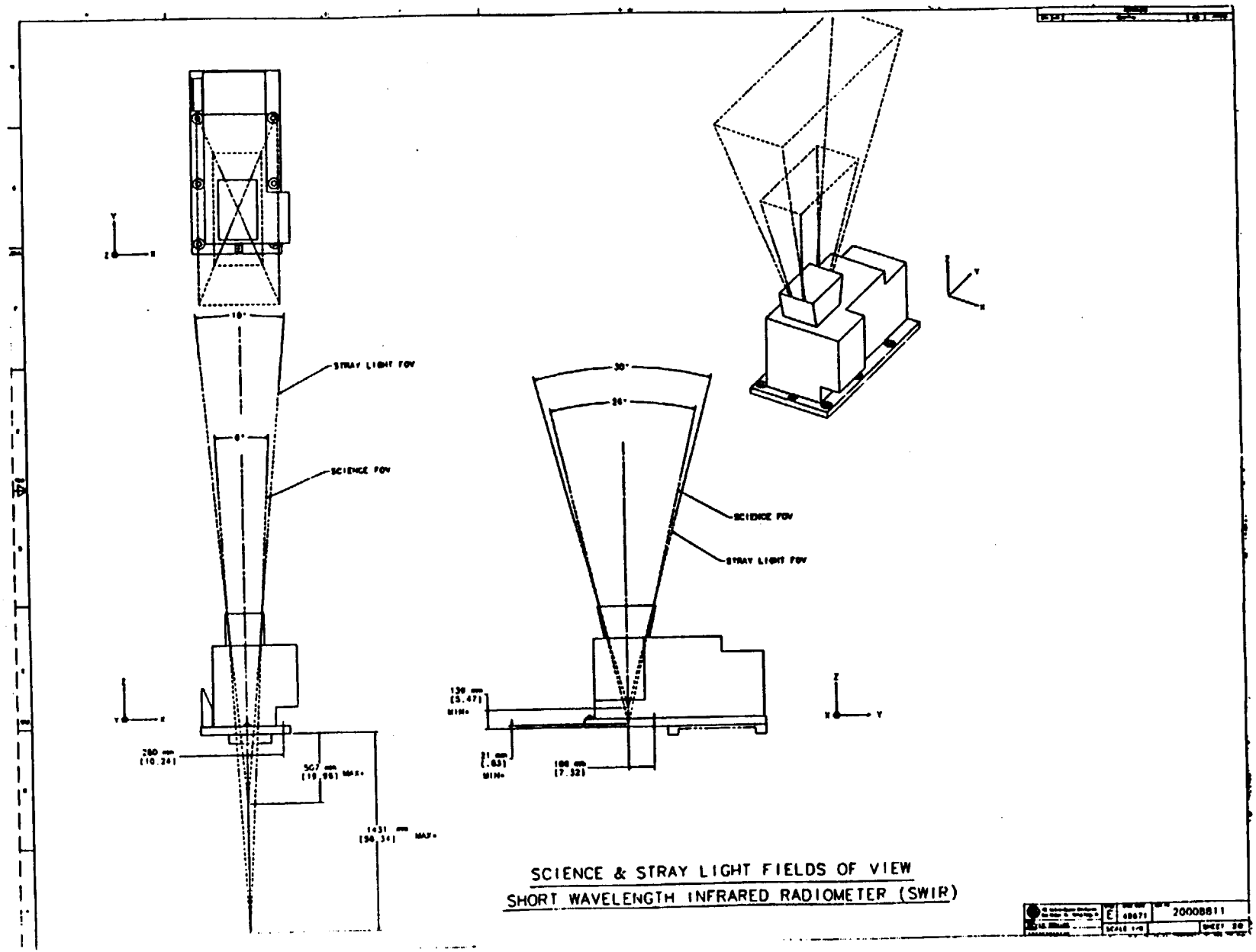
STRAY LIGHT FOV
SCIENCE FOV
10°
8°
30°
26°
SCIENCE FOV
STRAY LIGHT FOV
260 mm
[10.24]
567 mm
[19.95] MAX.
1431 mm
[56.31] MAX.
139 mm
[5.47]
MIN.
21 mm
[.83]
MIN.
186 mm
[7.32]
SCIENCE & STRAY LIGHT FIELDS OF VIEW
SHORT WAVELENGTH INFRARED RADIOMETER (SWIR)
20008811

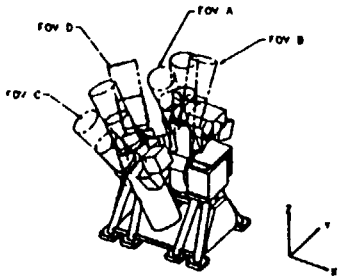

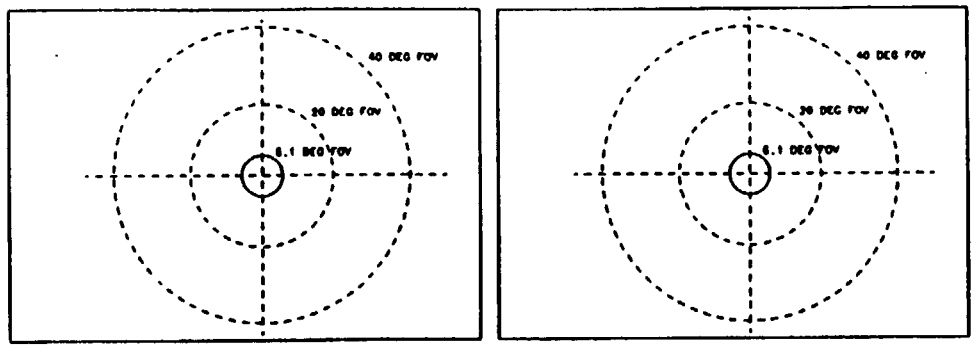

FOV A

6.1° TELESCOPE AT +24° POSITION

FOV B

6.1° TELESCOPE AT -24° POSITION

WIDE-ANGLE PERSPECTIVE - SCIENCE FIELD OF VIEW
NADIR POINTING TELESCOPE
VNIR SCANNING RADIOMETER (VSR)

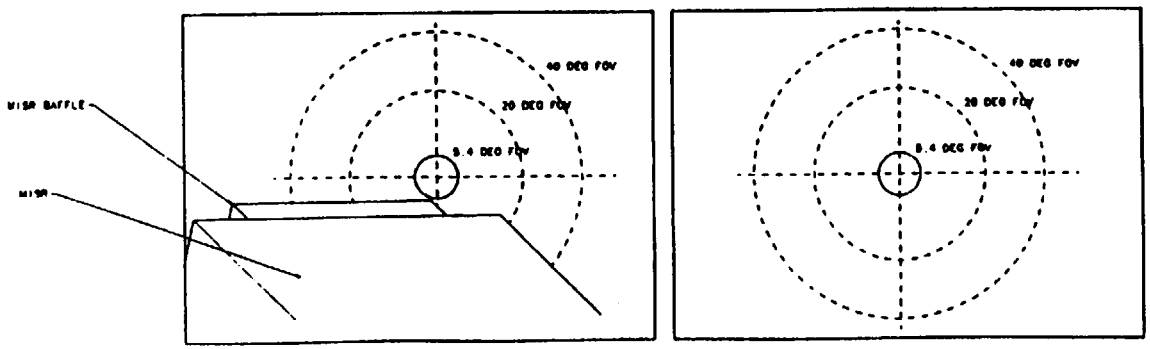

FOV C

5.4° TELESCOPE AT +24° POSITION

FOV D

5.4° TELESCOPE AT -24° POSITION

WIDE-ANGLE PERSPECTIVE - SCIENCE FIELD OF VIEW
BACKWARD POINTING TELESCOPE
VNIR SCANNING RADIOMETER (VSR)

E 48671 | 20008811 | SCALE -/- | SHEET 21

20008811
30 August 1993

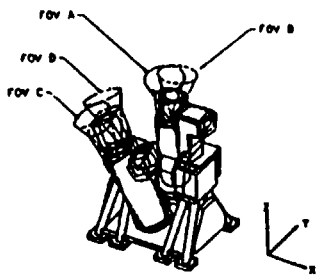

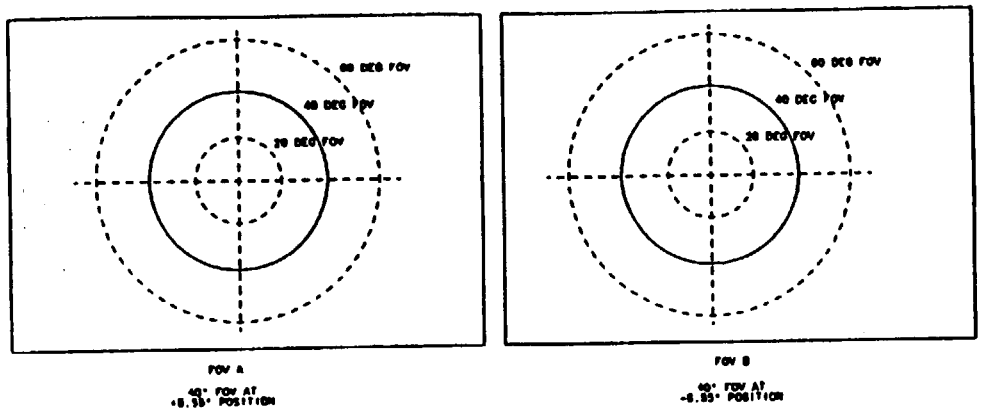

WIDE-ANGLE PERSPECTIVE - STRAYLIGHT FIELD OF VIEW
NADIR POINTING TELESCOPE
VNIR SCANNING RADIOMETER (VSR)

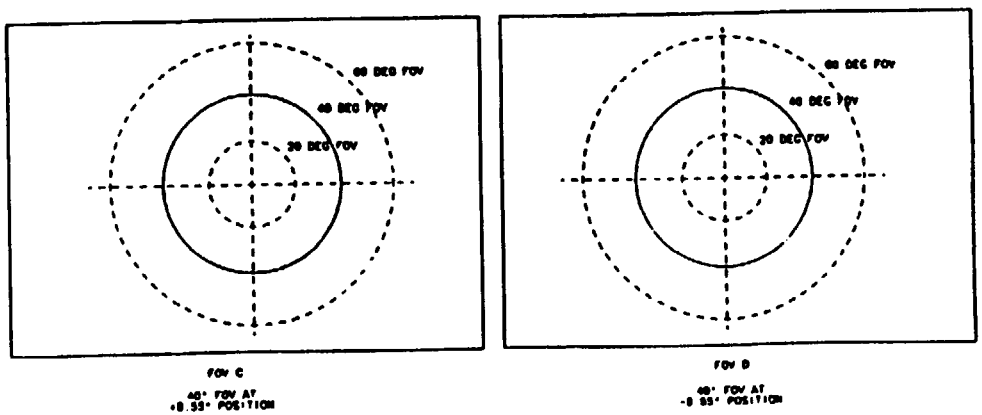

WIDE-ANGLE PERSPECTIVE - STRAYLIGHT FIELD OF VIEW
BACKWARD POINTING TELESCOPE
VNIR SCANNING RADIOMETER (VSR)

E 40671 20008811
SCALE
SHEET 22

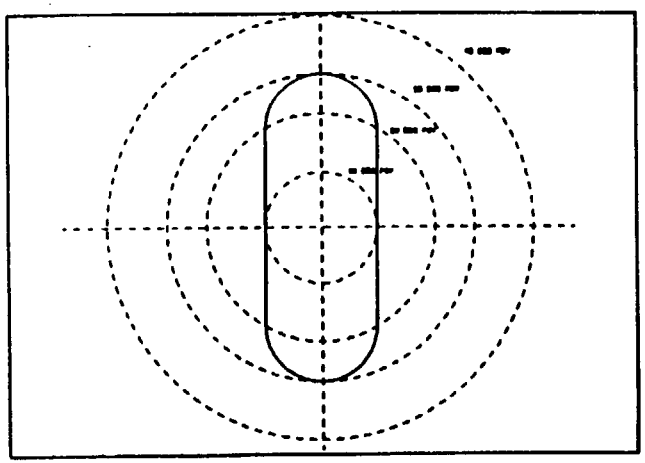

WIDE-ANGLE PERSPECTIVE - SCIENCE FIELD OF VIEW

THERMAL INFRARED RADIOMETER (TIR)

20008811

20008811
30 August 1993

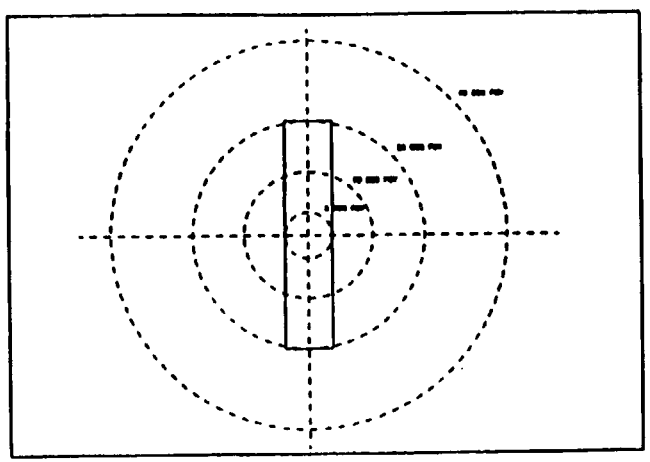

SCIENCE FIELD OF VIEW

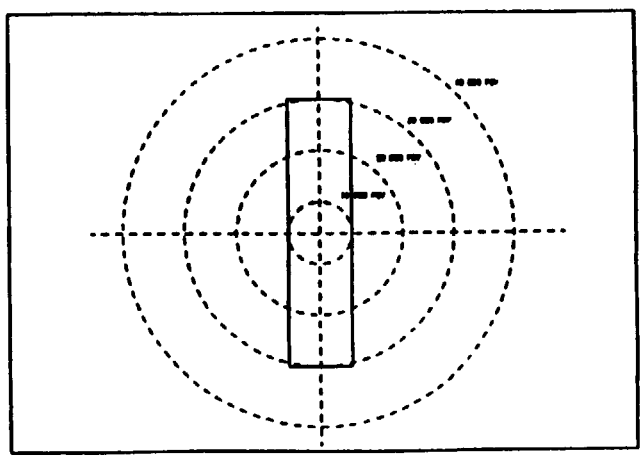

STRAYLIGHT FIELD OF VIEW

WIDE-ANGLE PERSPECTIVE

SHORT WAVELENGTH INFRARED RADIOMETER (SWIR)

VSR MOUNTING HARDWARE (TBD VSR003)			
PART NO.	DESCRIPTION	QTY	RESPONSIBLE
TBD	BOLT (ø .375 IN)	32	MARTIN MARIETTA
TBD	WASHER	32	MARTIN MARIETTA

FOOT DESIGN DETAILS
(TBD VSR004)

MOUNTING DEFINITION

VNIR SCANNING RADIOMETER (VSR)

E 49671 20008811

SCALE

SHEET 25

20008811
30 August 1993

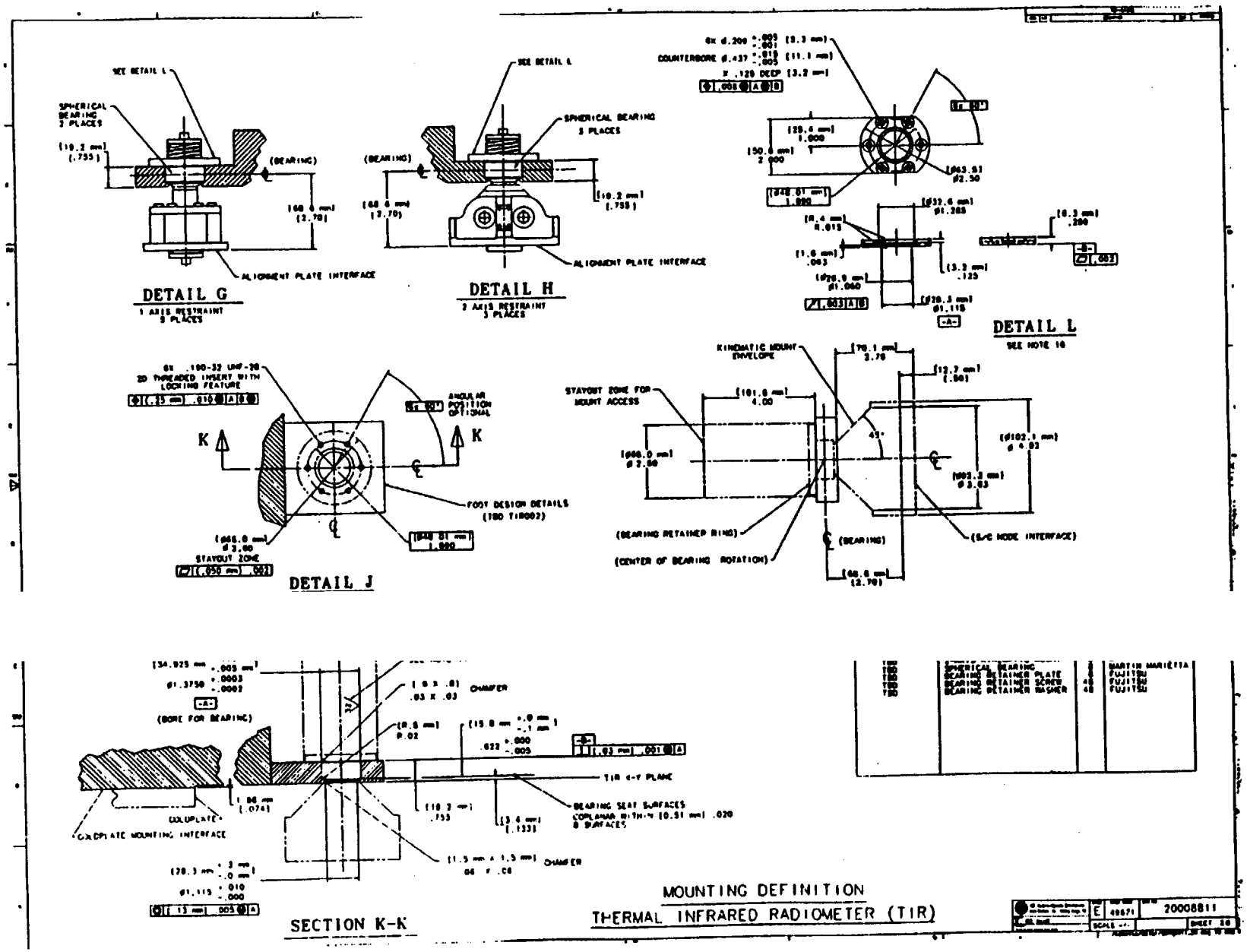
DETAIL G
1 AXIS RESTRAINT
3 PLACES
DETAIL H
2 AXIS RESTRAINT
3 PLACES
DETAIL L
SEE NOTE 10
DETAIL J
SECTION K-K
MOUNTING DEFINITION
THERMAL INFRARED RADIOMETER (TIR)
20008811

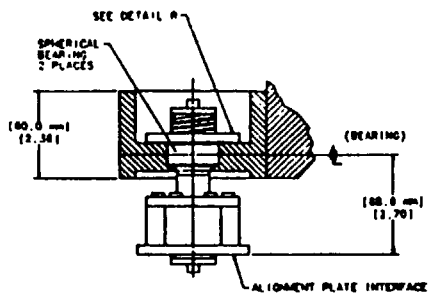

DETAIL M

1 AXIS RESTRAINT
4 PLACES

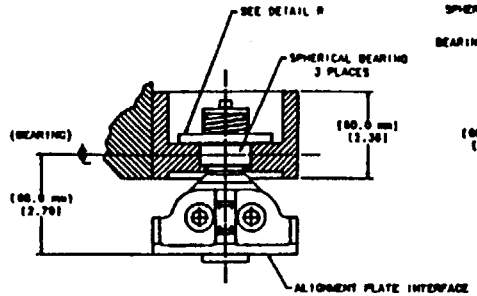

DETAIL N

2 AXIS RESTRAINT
1 PLACE

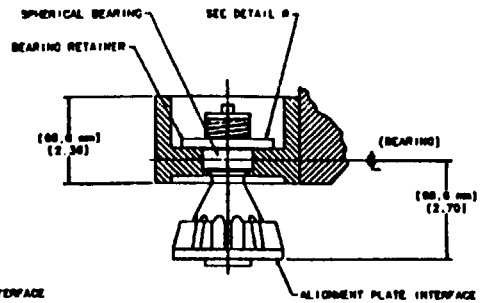

DETAIL P

3 AXIS RESTRAINT
1 PLACE

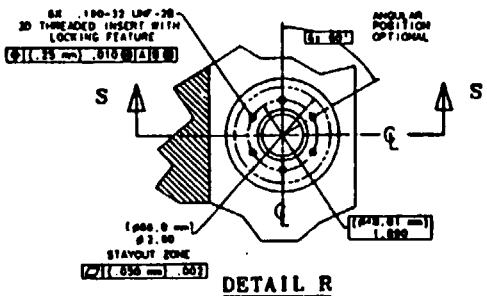

DETAIL R

BEARING RETAINER BOLT HOLE PATTERN
1, 2, AND 3 AXIS RESTRAINTS
(BEARING RETAINER NOT SHOWN FOR CLARITY)

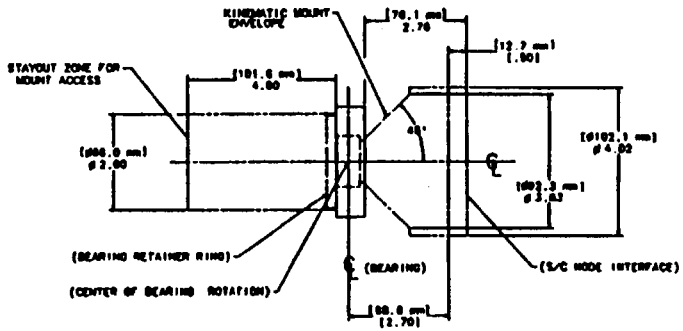

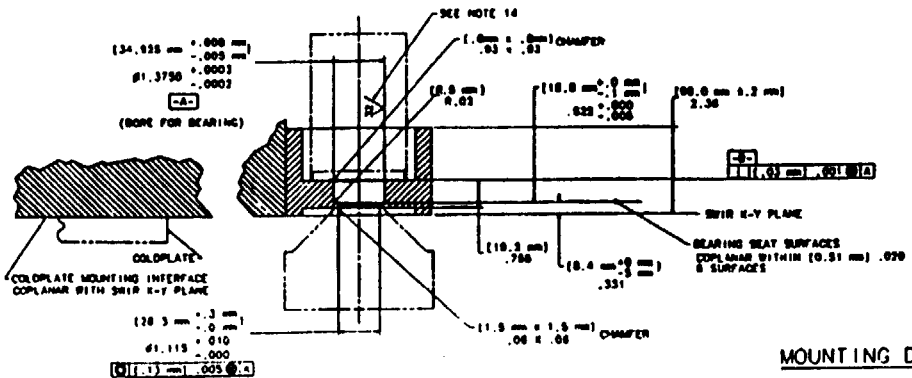

SECTION S-S

SWIR MOUNTING HARDWARE (TBD SWIR001)			
PART NO.	DESCRIPTION	QTY	RESPONSIBLE
TBD	1-AXIS KINEMATIC MOUNT	4	MARTIN MARIETTA
TBD	2-AXIS KINEMATIC MOUNT	1	MARTIN MARIETTA
TBD	3-AXIS KINEMATIC MOUNT	1	MARTIN MARIETTA
TBD	SPHERICAL BEARING	6	MARTIN MARIETTA
TBD	BEARING RETAINER PLATE	1	MARTIN MARIETTA
TBD	BEARING RETAINER SCREW	36	MARTIN MARIETTA
TBD	BEARING RETAINER WASHER	36	MARTIN MARIETTA

MOUNTING DEFINITION

SHORT WAVE INFRARED RADIOMETER (SWIR)

E 40671 20008811 SCALE -/- SHEET 37

20008811
30 August 1993

MPS MOUNTING HARDWARE (TBD MPS002)			
PART NO.	DESCRIPTION	QTY	RESPONSIBLE
TBD	BOLT (Ø.250 IN)	8	MARTIN MARIETTA
TBD	WASHER	8	MARTIN MARIETTA
TBD	THERMAL INSULATOR	TBD	MEC
TBD	ISOLATOR WASHER	TBD	MEC

MASTER POWER SUPPLY (MPS)

VEL MOUNTING HARDWARE (TBD VEL001)			
PART NO.	DESCRIPTION	QTY	RESPONSIBLE
TBD	BOLT (Ø.250 IN)	10	MARTIN MARIETTA
TBD	WASHER	10	MARTIN MARIETTA
TBD	THERMAL INSULATOR	TBD	MEC

VNIR ELECTRONICS (VEL)

CSP MOUNTING HARDWARE (TBD CSP002)			
PART NO.	DESCRIPTION	QTY	RESPONSIBLE
TBD	BOLT (Ø.250 IN)	10	MARTIN MARIETTA
TBD	WASHER	10	MARTIN MARIETTA
TBD	THERMAL INSULATOR	TBD	MEC

COMMON SIGNAL PROCESSOR (CSP)

MOUNTING DEFINITION

E 40671 | 20008811 | SCALE --- | SHEET 36

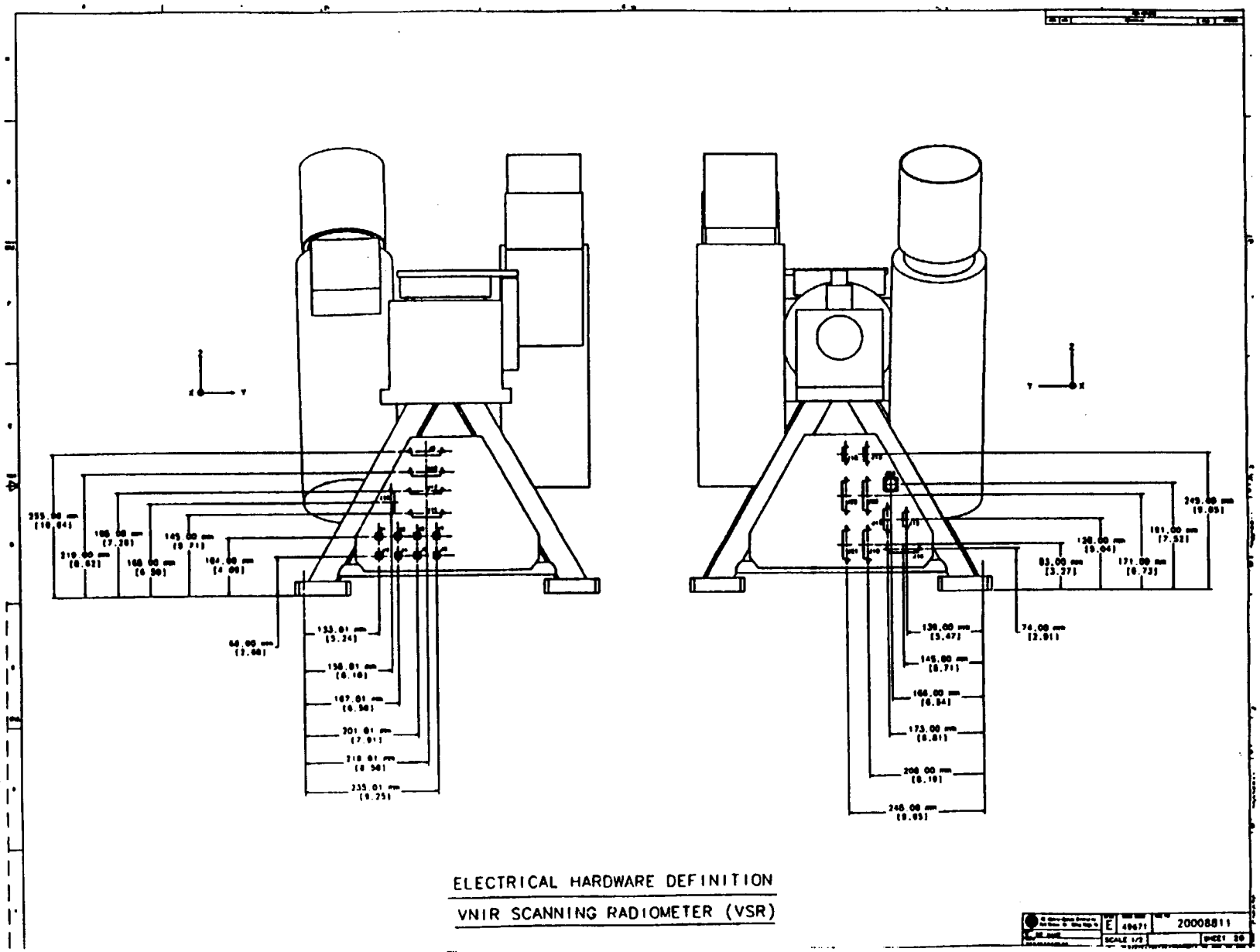

20008811
30 August 1993

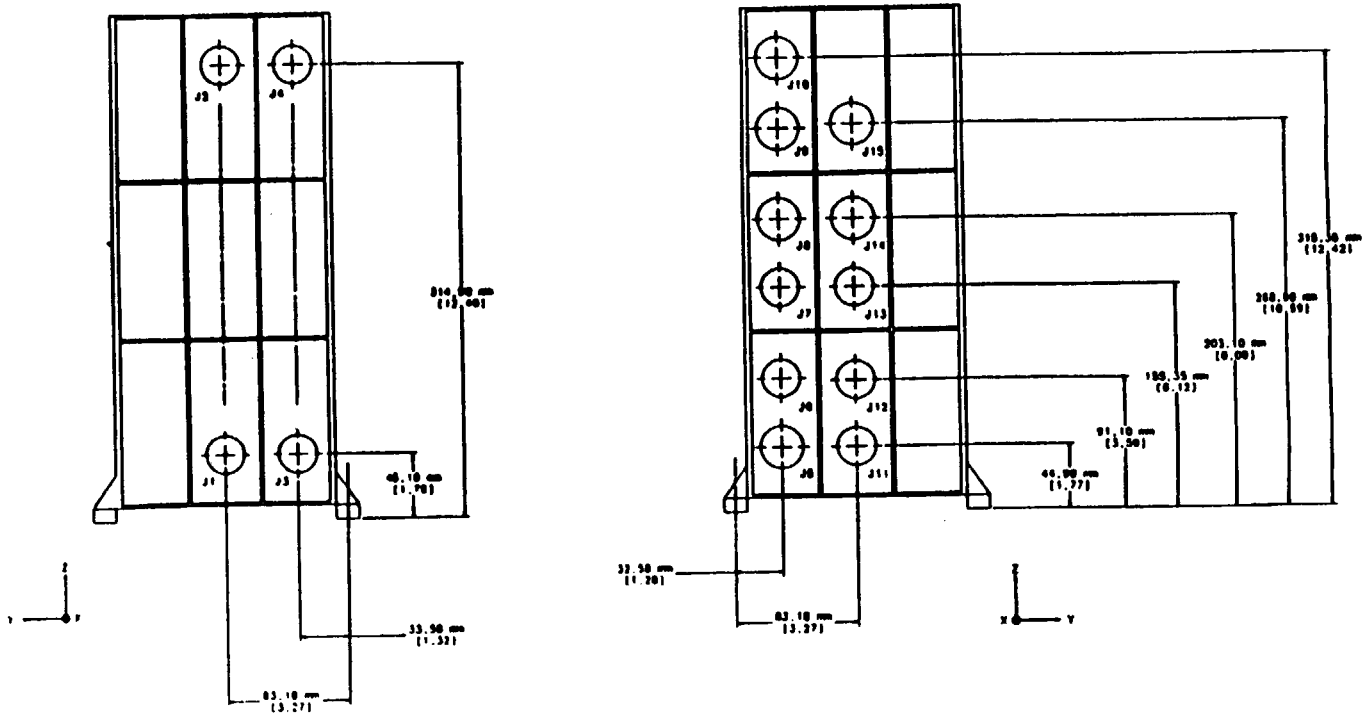

ELECTRICAL HARDWARE DEFINITION

MASTER POWER SUPPLY (MPS)

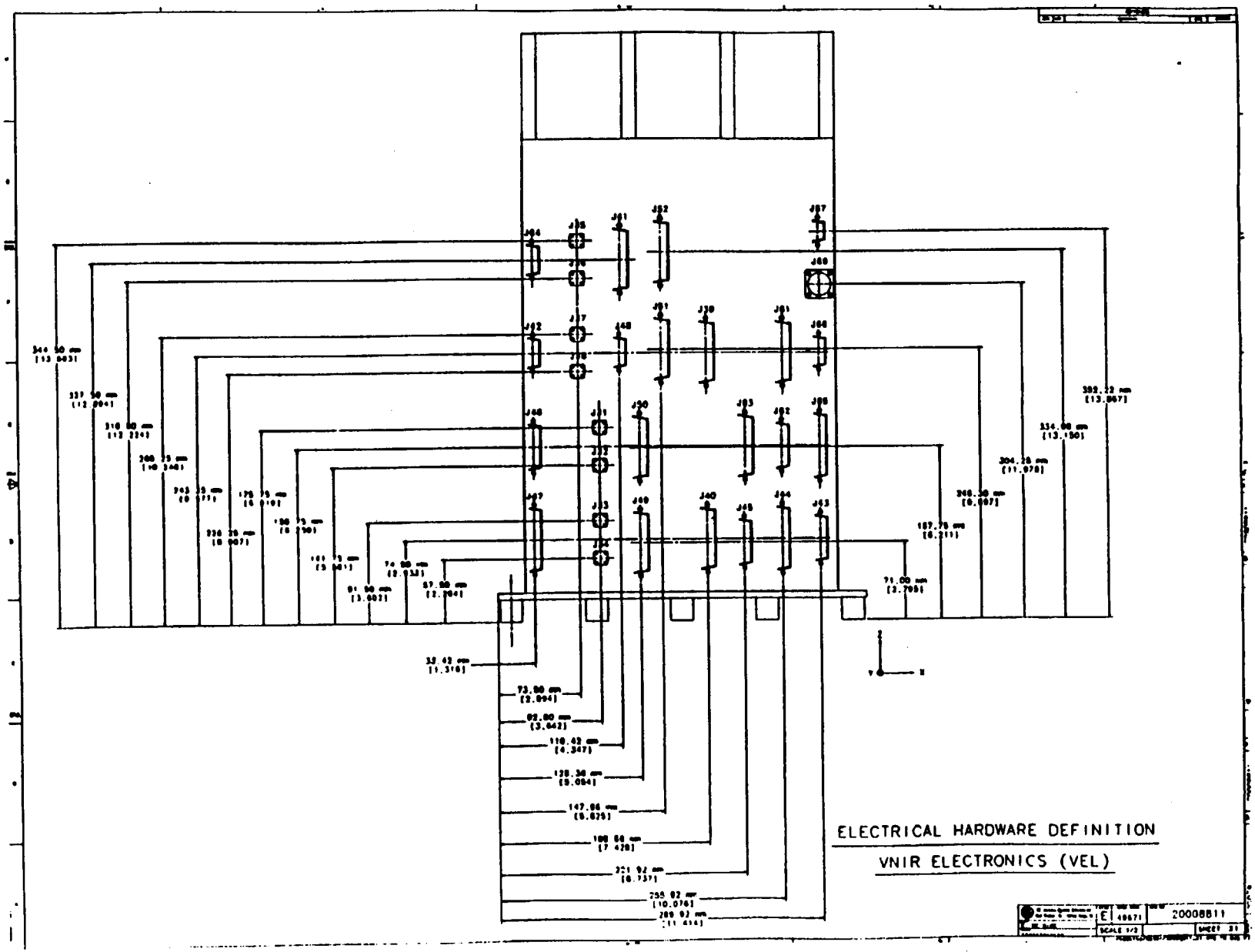

20008811
30 August 1993

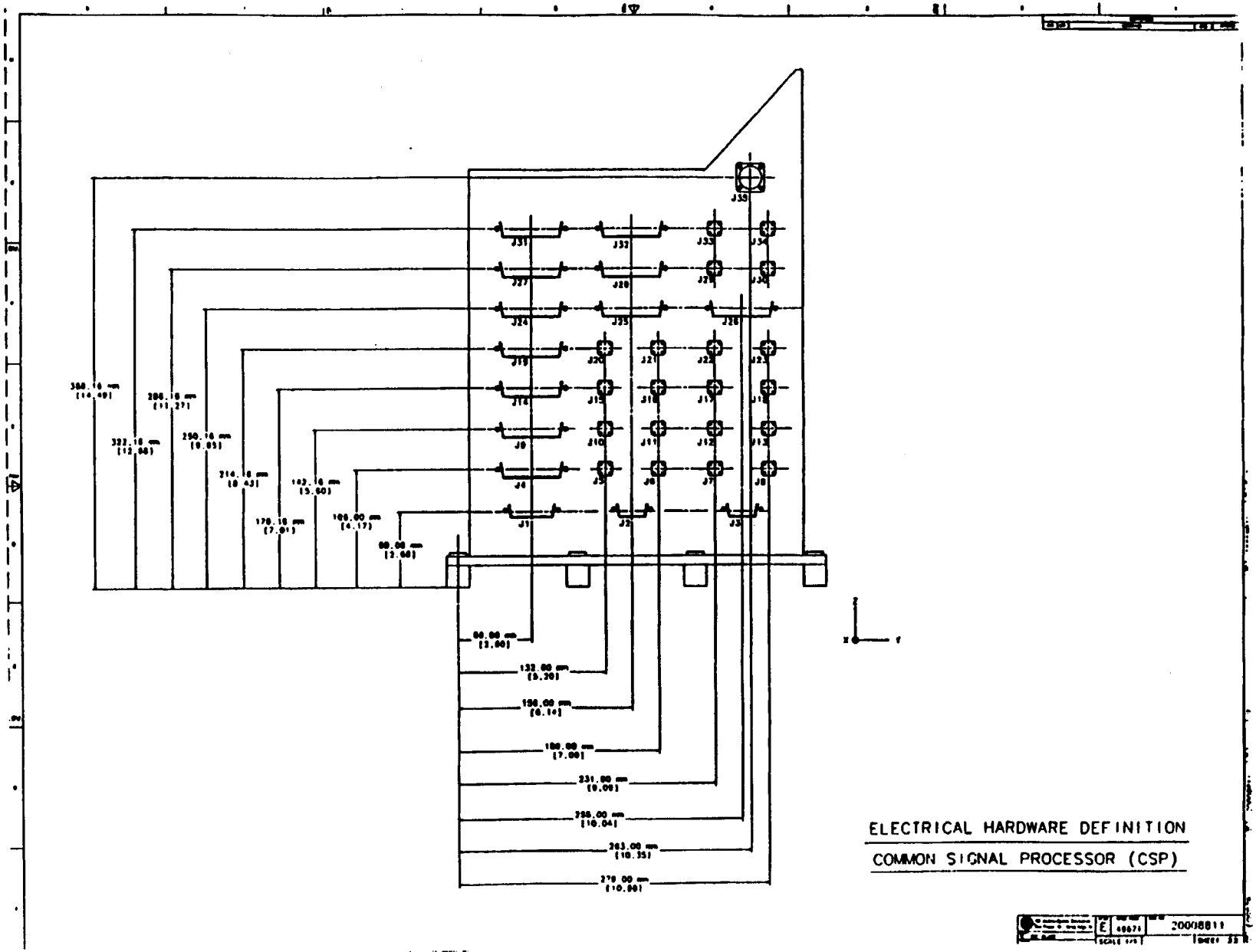
ELECTRICAL HARDWARE DEFINITION
COMMON SIGNAL PROCESSOR (CSP)
20008811

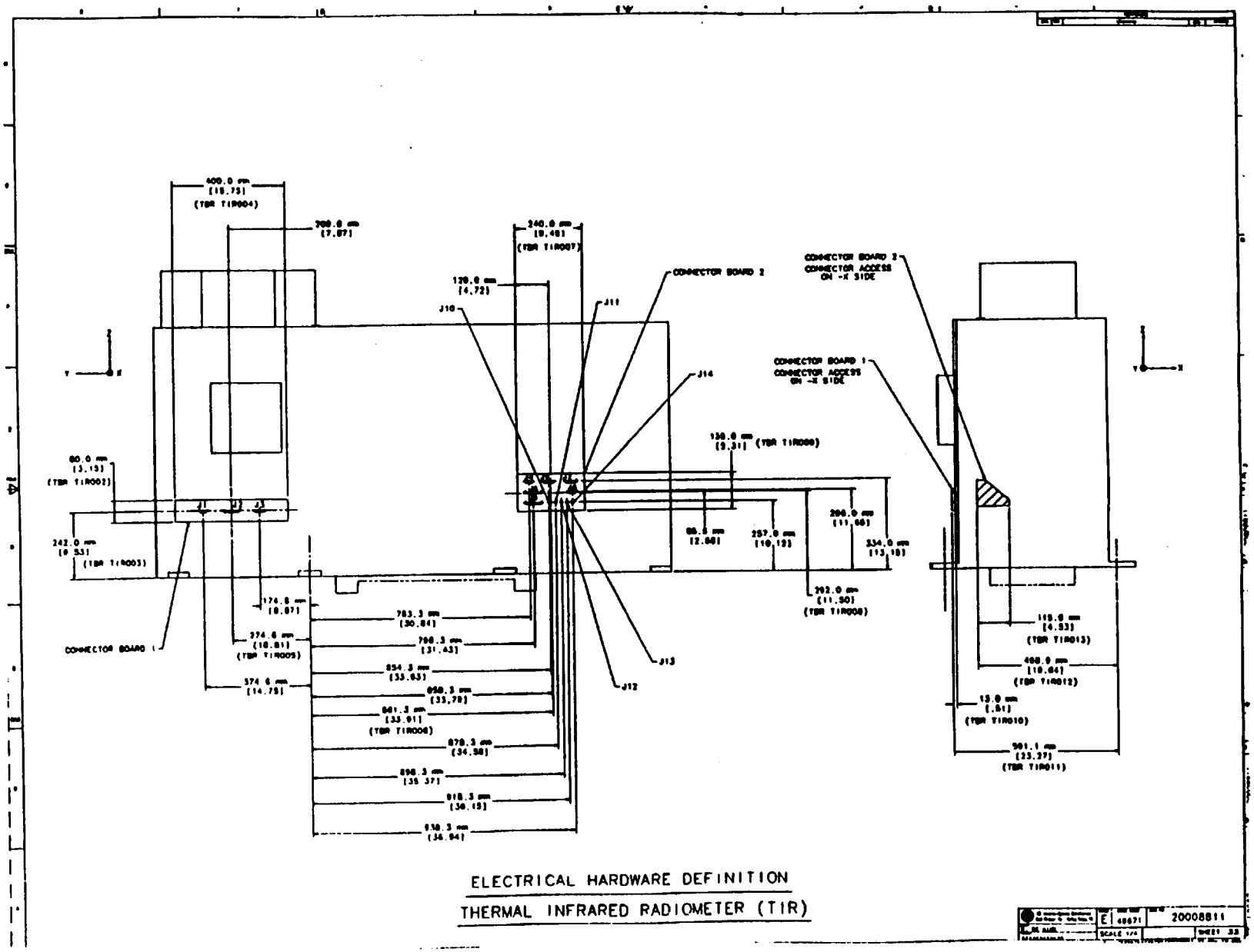

ELECTRICAL HARDWARE DEFINITION

THERMAL INFRARED RADIOMETER (TIR)

20008811

SCALE 1/4

SHEET 33

20008811
30 August 1993

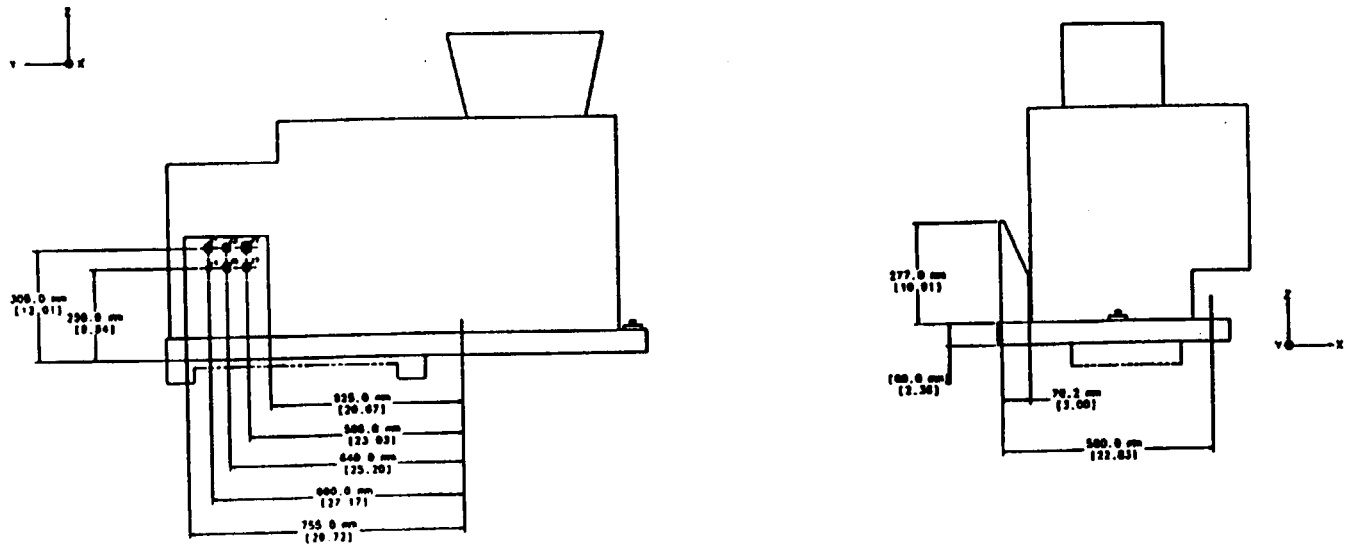

ELECTRICAL HARDWARE DEFINITION

SHORT WAVELENGTH INFRARED RADIOMETER (SWIR)

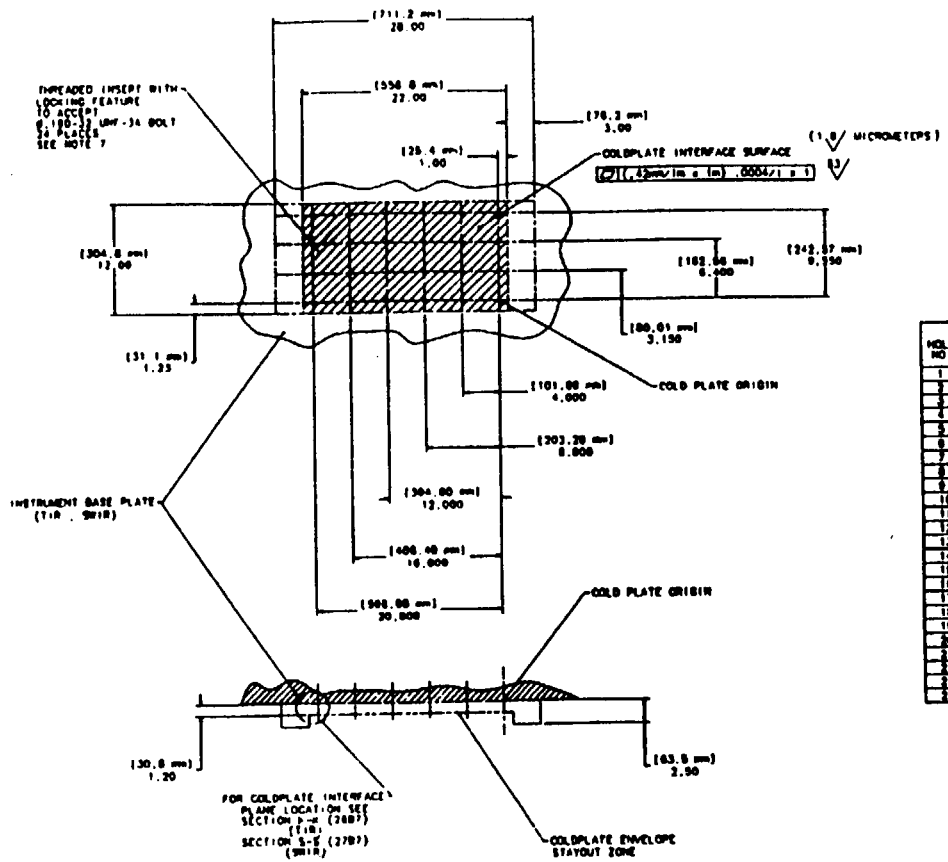

DETAIL T

SCALE: 1/4

COLDPLATE MOUNTING INTERFACE

SEE NOTES 7 AND 9

TIR

HOLE NO.	DISTANCE FROM TIR ORIGIN X-DIM	Y-DIM
1	7.437	8.488
2	7.434	13.488
3	7.410	17.488
4	7.387	21.488
5	7.344	25.488
6	7.341	29.488
7	10.507	9.507
8	10.504	13.507
9	10.540	17.507
10	10.537	21.506
11	10.514	25.506
12	10.481	29.506
13	13.637	8.526
14	13.633	13.526
15	13.610	17.526
16	13.587	21.525
17	13.564	25.525
18	13.561	29.525
19	17.007	9.544
20	16.983	13.544
21	16.940	17.544
22	16.937	21.544
23	16.914	25.544
24	16.890	29.543

SWIR

HOLE NO.	DISTANCE FROM SWIR ORIGIN X-DIM	Y-DIM
1	4.486	27.000
2	4.486	23.000
3	4.486	19.000
4	4.486	15.000
5	4.486	11.000
6	4.486	7.000
7	7.646	27.000
8	7.646	23.000
9	7.646	19.000
10	7.646	15.000
11	7.646	11.000
12	7.646	7.000
13	10.806	27.000
14	10.806	23.000
15	10.806	19.000
16	10.806	15.000
17	10.806	11.000
18	10.806	7.000
19	14.046	27.000
20	14.046	23.000
21	14.046	19.000
22	14.046	15.000
23	14.046	11.000
24	14.046	7.000

LOCATION OF COLDPLATE ATTACHMENT HOLES (REFERENCE)

DIMENSIONS ARE IN EOS COORDINATE SYSTEM

THERMAL HARDWARE DEFINITION

E 43671 20008811

SCALE 1/4 SHEET 35

20008811
30 August 1993

(TBD MISC002)

GROUND SUPPORT EQUIPMENT ATTACHMENT

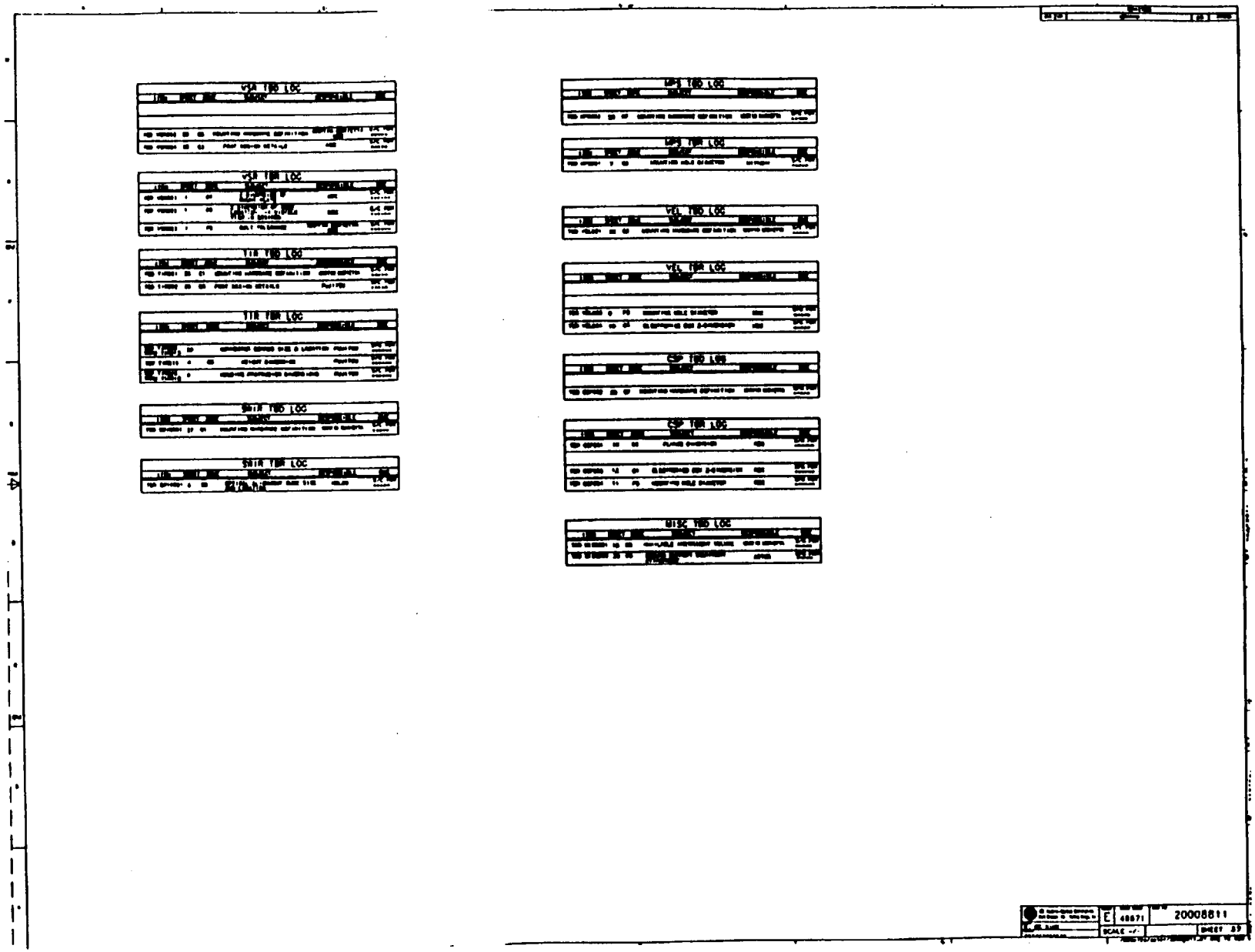

20008811
30 August 1993

Next Assembly	Used on	Revisions		Rev 001	
20008810	EOS AM	Ltr	Description	Date	Approv
First Application EOS AM		001	initial version for sign-off	8/06/93	

Revision Record Continued on Sheet _____

	Contract No. NAS5-32500	MARTIN MARIETTA — POST OFFICE BOX 800 PRINCETON, NEW JERSEY 08543- TELEPHONE (609) 490-3400
	Written J. Cymerman Date	**Interface Control Drawing, Mechanical, Tables, Earth Observing System AM Spacecraft to Advanced Spaceborne Thermal Emission and Reflectio Radiometer.**
	Approved F. Komro Date	
	Approved Date	Size A — Code Ident No. 49671 — 20008812
	Issued G. Rauscher Date	Sheet 1 of 54

PURPOSE

The Mechanical Interface Control Drawing (MICD) Tables, 20008812, when executed, in conjunction with the MICD Drawing, 20008811, represents an agreement of the detailed implementation of the mechanical interface between the Earth Observing System (EOS) AM Spacecraft and the Advanced Spaceborne Thermal Emission and Reflection Radiometer (ASTER). ASTER is composed of the following Instrument components: the Visible and Near Infrared Radiometer (VNIR) (which is composed of two components, the VNIR Scanning Radiometer (VSR), and the VNIR Electronics (VEL), the Short Wavelength Infrared Radiometer, (SWIR), the Thermal Infrared Radiometer (TIR), the Master Power Supply (MPS), and the Common Signal Processor (CSP). These two drawings, together with the Electrical Interface Control Drawing (EICD) schematics 20008814, EICD tables 20008815, Integration and Test Interface Control drawing (I&T ICD), 20008816, Thermal Interface Control Drawing (TICD), 20008813 and the Command and Data Handling (C&DH) ICD, 20008817, describe the details of the interfaces between the EOS AM Spacecraft and ASTER. The top–level Instrument Interface Control Drawing (ICD), 20008810, provides the instrument ICD tree and revision status for all sub–tier instrument ICDs.

SCOPE

The MICD Tables in conjunction with the MICD Drawings contain information necessary to develop the spacecraft configuration, for structural and mechanical studies, and during I&T for verification of installation and alignment. The MICD Tables describe the instrument mass properties; mechanisms; finite element model (FEM); flight and launch accountability kit items; and alignment data. The MICD Drawing contains the instrument component outline drawings; science and calibration fields of view; mounting, electrical, and thermal hardware definition; and instrument ground support equipment attachment.

Approval Signatures

ALL CHANGES ON THIS DRAWING SHALL HAVE THE APPROVAL AND THE FULL AGREEMENT OF THE PARTIES LISTED BELOW.

REV	Spacecraft Program Office	Date	Instrument Project Office	Date
	(signature on file) M. Kavka	8/25/93	M. Kudoh	

Size	Code Ident No.	
A	49671	20008812
		Sheet 2

Table of Contents

Section	Title	Sheet
	PURPOSE	2
	SCOPE	2
	Approval Signatures	2
	MICD TABLES	8

List of Figures

Figure No.	Title	Sheet
1a	VNIR– VSR Coordinate System	10
1b	VNIR – VEL Coordinate System	11
1c	SWIR Coordinate System	12
1d	TIR Coordinate System	13
1e	CSP Coordinate System	14
1f	MPS Coordinate System	15
2a	VNIR – VSR Pointing Axis Definition	24
2b	VNIR – VSR Mechanism Movement Definition	25
3a–1	VNIR – VSR Disturbance Profiles	32
3b–1	SWIR Stirling Cooler Residual Force Profile (Along the Axis)	33
3b–2	SWIR Stirling Cooler Residual Torque Profile (About the Axis)	34
3c–1	SWIR Pointing Mirror Residual Torque Profile	35
3c–1a	SWIR Pointing Mirror Local Coordinate System	36
3c–2	SWIR Pointing Mirror Angular Momentum Profile	37
3d–1	TIR Mirror Scanning Pattern and Angular Momentum Profile	38
3d–2	TIR Mirror Residual Torque Scanning Profile	39
3d–3	TIR Mirror Residual Force Scanning Profile	40
3e–1	TIR Chopper Residual Force Profile	41
3f–1	TIR Stirling Cooler Residual Force Profile (Along the Axis)	42
3f–2	TIR Stirling Cooler Residual Torque Profile (About the Axis)	43

List of Tables

Table No	Title	Sheet
Ia	VNIR – VSR Origin Reference Coordinates	10
Ib	VNIR – VEL Origin Reference Coordinates	11
Ic	SWIR Origin Reference Coordinates	12
Id	TIR Origin Reference Coordinates	13
Ie	CSP Origin Reference Coordinates	14
If	MPS Origin Reference Coordinates	15
IIa	Mass Properties – VNIR (VSR) – Launch and On–Orbit Configuration (Values at 0 and +/– 8.5° Pointing)	16
IIb	Mass Properties – VNIR (VSR) – On–Orbit Configuration (Values at +/– 24° Pointing)	17
IIc	Mass Properties– VNIR (VEL) – Launch and On–Orbit Configuration	18
IId	Mass Properties – SWIR – Launch and On–Orbit Configuration	19
IIe	Mass Properties – TIR – Launch and On–Orbit Configuration	20
IIf	Mass Properties – CSP – Launch and On–Orbit Configuration	21
IIg	Mass Properties – MPS – Launch and On–Orbit Configuration	22
IIIa	Mechanism Characteristics–VNIR (VSR Telescope Assembly)	23
IIIb	Mechanism Characteristics–SWIR Stirling Cooler Compressor & Displacer	26
IIIc	Mechanism Characteristics–SWIR Pointing Mirror Mechanism	27
IIId	Mechanism Characteristics –TIR Scan Mirror Mechanism	28
IIIe	Mechanism Characteristics–TIR Stirling Cooler Compressor	29
IIIf	Mechanism Characteristics–TIR Stirling Cooler Displacer	30
IIIg	Mechanism Characteristics–TIR Chopper Mechanism	31
IVa	VNIR (VSR) Finite Element Model	44
IVb	VNIR (VEL) Finite Element Model	45
IVc	TIR Finite Element Model	46
IVd	SWIR Finite Element Model	47
IVe	CSP Finite Element Model	48
IVf	MPS Finite Element Model	48
V	ASTER Flight Items	49
VI	Launch Accountability Kit	50
VIIa	VNIR – VSR Alignment Data	51
VIIb	TIR Alignment Data	52
VIIc	SWIR Alignment Data	53
VIII	Reference Documents	54

TBD LOG

ITEM	SECTION	PAGE	SUBJECT	RESPONSIBLE	DUE
TBD 001	Fig. 1a–1f	10–15	Launch vehicle coordinate system	MMC	Launch Vehicle announcement + 26 weeks
TBD 002	Table Ia–1f	10–15	Launch vehicle coordinates of ASTER components	MMC	Launch Vehicle announcement + 26 weeks
TBD 003	Table IIc	18	VEL Mass Prop. Prod of Inertia	JAROS	S/C PDR
TBD 004	Table IId	19	SWIR Mass Prop. Mom. & Prod of Inertia	JAROS	S/C PDR
TBD 005	Table IIe	20	TIR Mass Prop. Prod. of Inertia	JAROS	S/C PDR
TBD 006	Table IIf	21	CSP Mass Prop. Prod. of Inertia	JAROS	S/C PDR
TBD 007	Table IIg	22	MPS Mass Prop. Prod. of Inertia.	JAROS	S/C PDR
TBD 008	Table IIIb	26	SWIR Mechanism Characteristics Stirling Cooler Mechanism Upper Frequency	JAROS	S/C PDR
TBD 009	Table IIIc	27	SWIR Mechanism Characteristics Pointing Mirror	JAROS	S/C PDR
TBD 010	Table V	49	Deliverable flight items	JAROS	ASTER CDR +4 weeks
TBD 011	Table VI	50	Launch Accountability Kit Part number of kit items	JAROS	ASTER CDR +4 weeks
TBD 012	Table VIIa	51	VSR alignment data and drill templates	JAROS/MMC	6/95
TBD 013	Table VIIb	52	TIR alignment data and drill templates	JAROS/MMC	6/95
TBD 014	Table VIIc	53	SWIR alignment data and drill templates	JAROS/MMC	6/95

*Where the majority of the table information is TBD, the entire table has been identified as TBD in the table title. Table information will be filled in as it becomes available.

TBR LOG

ITEM	SECTION	PAGE	SUBJECT	RESP.	DUE
TBR 001	Table IIa & IIb	16/17	VSR/VEL Mass Properties All Values	JAROS	S/C PDR
TBR 002	Table IIe	20	TIR Mass Properties All Values	JAROS	S/C PDR
TBR 003	Table IIf	21	CSP Mass Properties All Values	JARO	S/C PDR
TBR 004	Table IIg	22	MPS Mass Properties All Values	JAROS	S/C PDR
TBR 005	Table IIIa	23	VSR Mechanism Characteristics Mass, & Center of Mass	JAROS	S/C PDR
TBR 006	Table IIIb	26	SWIR Mechanism Characteristics SWIR Stirling Cooler, Values & Operations	JAROS	S/C PDR
TBR 007	Table IIIc	27	SWIR Mechanism Characteristics SWIR Pointing Mirror, Values & Operations	JAROS	S/C PDR
TBR 008	Table IIId	28	TIR Mechanism Characteristics TIR Scan Mirror Operation , Values & Operations	JAROS	S/C PDR
TBR 009	Table IIIe	29	TIR Mechanism Characteristics TIR Stirling Cooler Compressor	JAROS	S/C PDR
TBR 010	Table IIIf	30	TIR Mechanism Characteristics TIR Stirling Cooler Dispacer	JAROS	S/C PDR
TBR 011	Table IIIg	30	TIR Mechanism Characteristics TIR Chopper, Values & Operations	JAROS	S/C PDR
TBR 012	Figure 3c–2	36	SWIR Pointing Mirror Ang. Momentum Profile may not be consistant with figure 3c–1	JAROS	S/C PDR

*Where the majority of the table information is TBR, the entire table has been identified as TBR in the table title. Table information will be filled in as it becomes available.

MICD TABLES

1. The relationship among the instrument, spacecraft, and launch vehicle coordinate systems is shown pictorially in Figures 1a through 1f.

2. The conversion among coordinate systems at the instrument origin is shown in Tables Ia through If.

3. The ASTER mass properties are shown in Tables IIa Through IIf.

4. The ASTER Mechanisms are listed below. Mechanism characteristics are provided in Tables IIIa through IIIf. Torque, linear force versus time, and angular momentum profiles are provided in the corresponding figures identified by the same lower alpha character:
   a) VNIR (VSR Telescope Assembly)
   b) SWIR Stirling Cooler Compressor and Displacer
   c) SWIR Pointing Mirror Mechanism
   d) TIR Scan Mirror Mechanism
   e) TIR Chopper Mechanism
   f) TIR Stirling Cooler Compressor and Displacer

5. The finite element model which will be used by both the Instrument and Spacecraft Providers is identified in Table IV.

6. The instrument and associated spacecraft flight items are listed in Table V.

7. The contents of the launch accountability kit are identified in Table VI for both flight and non–flight items.

   The launch accountability kit contains each item not installed prior to shipment to the launch site and which must be installed before flight. Space is allocated for each item which must be removed before flight. Thus the launch accountability kit provides the means to verify that all items which must be installed before flight have been installed and all items which must be removed before flight have been removed.

8. The alignment offset among the instrument boresight, all alignment cubes, and the instrument and drill templates mounting planes and hole patterns are shown in Table VIIa through VIIc.

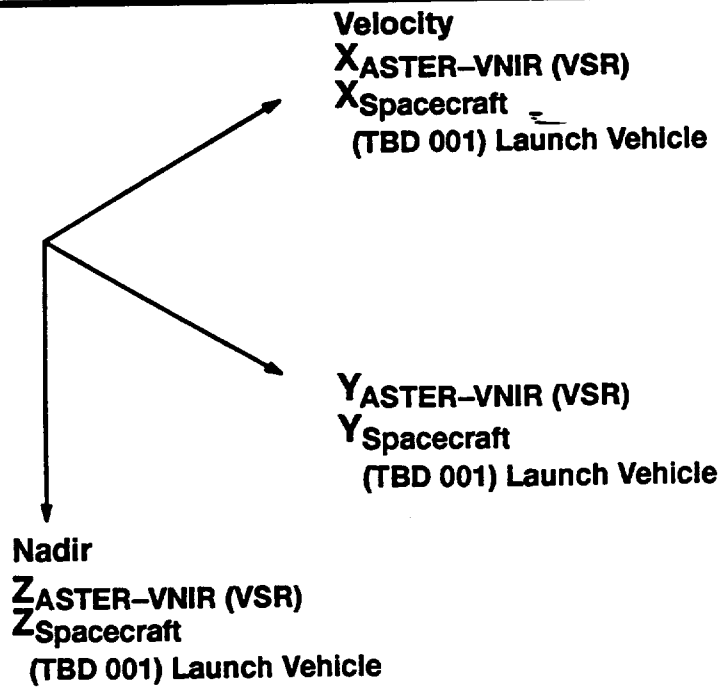

Figure 1a. VNIR– VSR Coordinate System

Table Ia. VNIR – VSR Origin Reference Coordinates

Local Coordinate System	Coordinates		
Instrument	X_{VSR}= 0.00	Y_{VSR}= 0.00	Z_{VSR}= 0.00
Spacecraft (S/C)	$X_{S/C}$= 108.04	$Y_{S/C}$= 3.71	$Z_{S/C}$= 30.77
Launch Vehicle (LV)	X_{LV}= (TBD 002)	Y_{LV}= (TBD 002)	Y_{LV}= (TBD 002)

Notes:

1. See 20008811 for location of instrument origin.

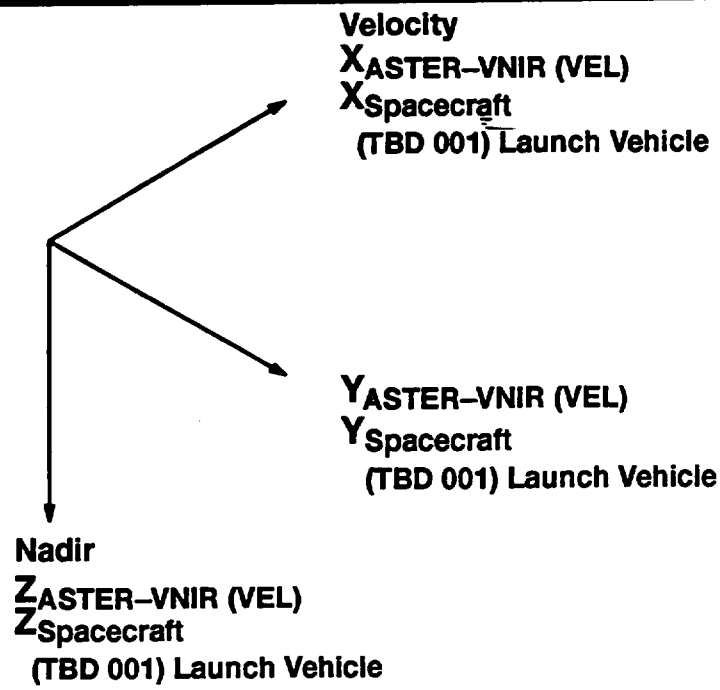

Figure 1b. VNIR – VEL Coordinate System

Table Ib. VNIR – VEL Origin Reference Coordinates

Local Coordinate System	Coordinates		
Instrument	X_{VEL}= 0.00	Y_{VEL}= 0.00	Z_{VEL}= 0.00
Spacecraft (S/C)	$X_{S/C}$ = 135.06	$Y_{S/C}$ = 16.25	$Z_{S/C}$ = 30.77
Launch Vehicle (LV)	X_{LV} = (TBD 002)	Y_{LV} = (TBD 002)	Z_{LV} = (TBD 002)

Notes:

1. See 20008811 for location of instrument origin.

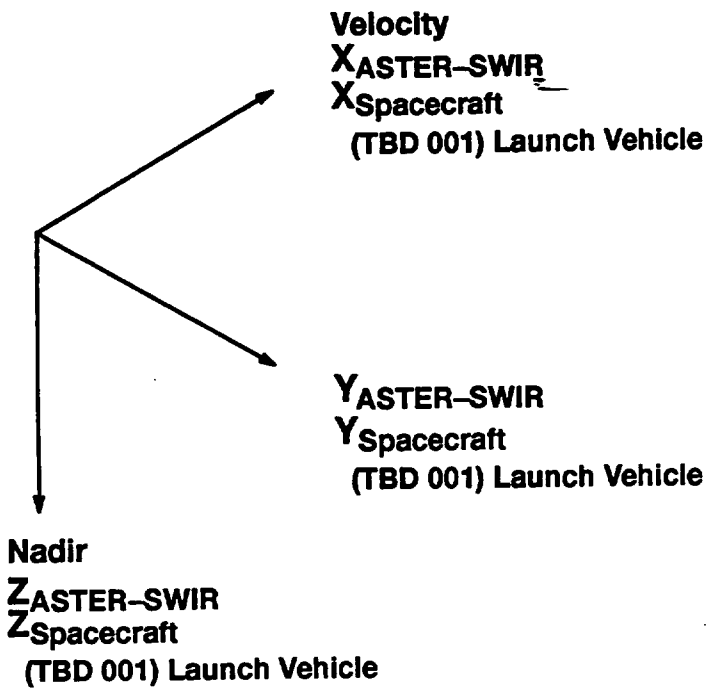

Figure 1c. SWIR Coordinate System

Table Ic. SWIR Origin Reference Coordinates

Local Coordinate System	Coordinates		
Instrument	X_{SWIR}= 0.00	Y_{SWIR}= 0.00	Z_{SWIR}= 0.00
Spacecraft (S/C)	$X_{S/C}$= 175.00	$Y_{S/C}$= –16.90	$Z_{S/C}$= 23.51
Launch Vehicle (LV)	X_{LV}= (TBD 002)	Y_{LV}= (TBD 002)	Z_{LV}= (TBD 002)

Notes:

1. See 20008811 for location of instrument origin.

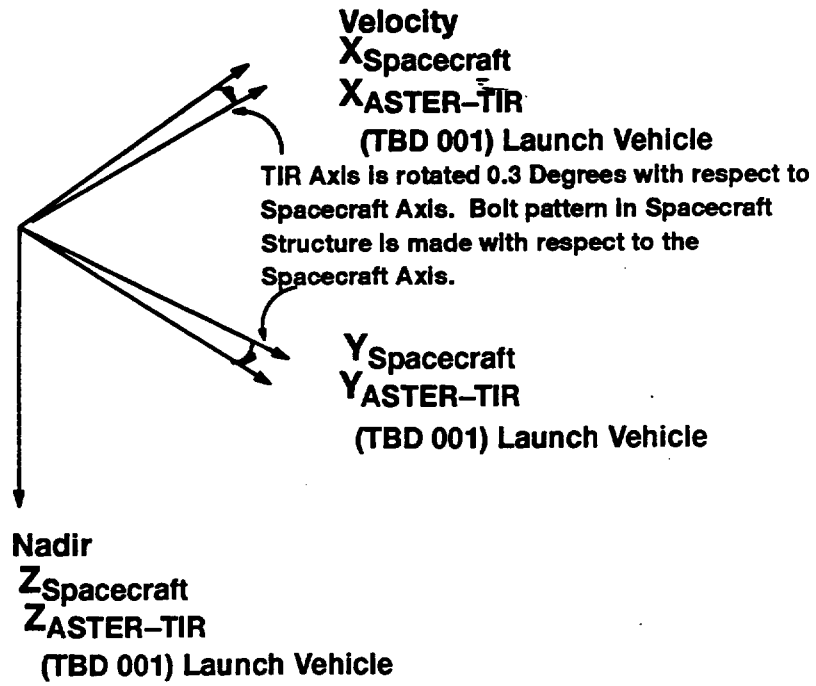

Figure 1d. TIR Coordinate System

Table Id. TIR Origin Reference Coordinates

Local Coordinate System	Coordinates		
Instrument	X_{TIR}= 0.00	Y_{TIR}= 0.00	Z_{TIR}= 0.00
Spacecraft (S/C)	$X_{S/C}$= 210.50	$Y_{S/C}$= 15.49	$Z_{S/C}$= 10.61
Launch Vehicle (LV)	X_{LV}= (TBD 002)	Y_{LV}= (TBD 002)	Z_{LV}= (TBD 002)

Notes:

1. See 20008811 for location of instrument origin.

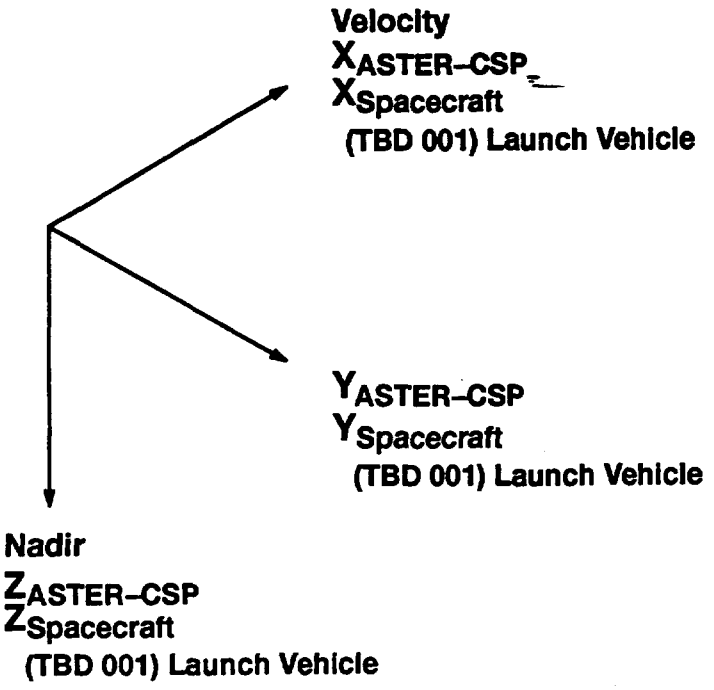

Figure 1e. CSP Coordinate System

Table Ie. CSP Origin Reference Coordinates

Local Coordinate System	Coordinates		
Instrument	X_{CSP}= 0.00	Y_{CSP}= 0.00	Z_{CSP}= 0.00
Spacecraft (S/C)	$X_{S/C}$= 149.25	$Y_{S/C}$= 22.02	$Z_{S/C}$= 30.77
Launch Vehicle (LV)	X_{LV}= (TBD 002)	Y_{LV}= (TBD 002)	Z_{LV}= (TBD 002)

Notes:

1. See 20008811 for location of instrument origin.

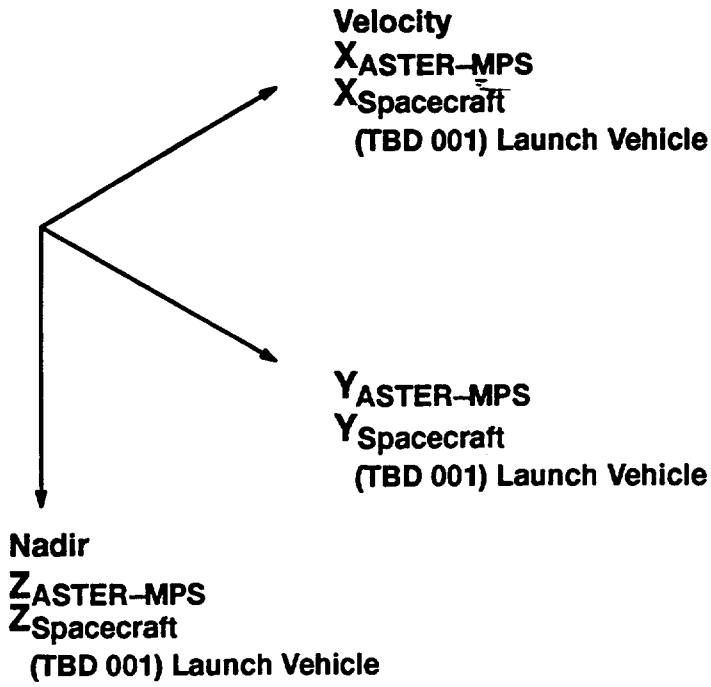

Figure 1f. MPS Coordinate System

Table If. MPS Origin Reference Coordinates

Local Coordinate System	Coordinates		
Instrument	X_{MPS}= 0.00	Y_{MPS}= 0.00	Z_{MPS}= 0.00
Spacecraft (S/C)	$X_{S/C}$= 114.50	$Y_{S/C}$= 28.96	$Z_{S/C}$= 30.77
Launch Vehicle (LV)	X_{LV}= (TBD 002)	Y_{LV}= (TBD 002)	Z_{LV}= (TBD 002)

Notes:

1. See 20008811 for location of instrument origin.

Table IIa. Mass Properties – VNIR (VSR) – Launch (0° Pointing)
All values given are (TBR 001)

Mass (kg) (See Note 1)	(%) (E)stimated (C)alculated (M)easured	Estimated Center of Mass (mm) (See Notes2,3&4)
47.7	100 E	x = +283.2 y = +256.9 z = +407.8

Estimated Inertia Matrix (kg–m^2) ± 10% (See Note 3 & 4)		
I_{XX} = 1.8	I_{XY} = 1.6E–2	I_{XZ} = 1.2E–2
I_{YX} = 1.6E–2	I_{YY} = 2.0	I_{YZ} = –2.3E–2
I_{ZX} = 1.2E–2	I_{ZY} = –2.3E–2	I_{ZZ} = 1.9

Notes:

1. The mass listed for all of the ASTER components were obtained from the ASTER PDR.
2. Mass, center of mass, products of inertia and moments of inertia at end of life are the same as at beginning of life.
3. Center of mass is specified with respect to instrument component local origin(see 20008811).
4. Instrument moments and products of inertia are specified about axes parallel to the instrument axes and passing through the instrument center of mass.

* Where the majority of table is TBR the entire table is designated as TBR.

Table IIb. Mass Properties – VNIR (VSR) – On–Orbit Configuration (Values at +/– 24 ° Pointing)

(TBR 001)*

Mass (kg) (See Note 1)	(%) (E)stimated (C)alculated (M)easured	Estimated Center of Mass (mm) (See Notes 2,3)
47.7	100 (E)	x = 283.2 y = 256.9 z = 407.8

Estimated Inertia Matrix (kg–m^2) ± 10% (See Notes 3 & 4)		
I_{XX} = 1.8	I_{XY} = 1.6E–2	I_{XZ} = 1.2E–2
I_{YX} = 1.6E–2	I_{YY} = 2.0	I_{YZ} = –2.3E–2
I_{ZX} = 1.2E–2	I_{ZY} = –2.3E–2	I_{ZZ} = 1.9

Notes:

* Where the majority of table is TBR the entire table is designated as TBR.

Table IIc. Mass Properties– VNIR (VEL) – Launch and On–Orbit Configuration

Mass (kg) (See Note 1)	(%) (E)stimated (C)alculated (M)easured	Estimated Center of Mass (mm) (See Notes 2,3&4)
26.3	100 (E)	x = 155.0 y = 233.0 z =209.0

(TBD 003)*

Estimated Inertia Matrix (kg–m^2) ± 10% (See Notes 3&4)		
I_{XX} = 0.63	I_{XY} =	I_{XZ} =
I_{YX} =	I_{YY} = 0.52	I_{YZ} =
I_{ZX} =	I_{ZY} =	I_{ZZ} = 0.56

Notes:

* Where the majority of table is TBD the entire table is designated as TBD.

Table IId. Mass Properties – SWIR – Launch and On–Orbit Configuration

Mass (kg) (See Note 1)	(%) (E)stimated (C)alculated (M)easured	Estimated Center of Mass (mm) (See Notes 2,3&4)
117.6	100 (E)	x = 325.0 y = 660.0 z = 260.0

(TBD 004)*

Estimated Inertia Matrix (kg–m^2) ± 10% (See Notes 3&4)		
I_{XX} =	I_{XY} =	I_{XZ} =
I_{YX} =	I_{YY} =	I_{YZ} =
I_{ZX} =	I_{ZY} =	I_{ZZ} =

Notes:

* Where the majority of the table is TBD the entire table is designated as TBD.

Table IIe. Mass Properties – TIR – Launch and On–Orbit Configuration

All values given are (TBR 002)

Mass (kg) (See Note 1)	(%) (E)stimated (C)alculated (M)easured	Estimated Center of Mass (mm) (See Notes 2,3&4)
149.9	100 (E)	x = –329 +/– 30 y = –230 +/– 60 z = 234 +/– 40

(TBD005)*

Estimated Inertia Matrix (kg–m^2) ± 10% (See Notes 3 & 4)		
I_{XX} = 41.0	I_{XY} =	I_{XZ} =
I_{YX} =	I_{YY} = 11.9	I_{YZ} =
I_{ZX} =	I_{ZY} =	I_{ZZ} = 37.5+/–4

Notes:

* Where the majority of table is TBD the entire table is designated as TBD.

Table IIf. Mass Properties – CSP – Launch and On–Orbit Configuration

All values given are (TBR 003)

Mass (kg) (See Note 1)	(%) (E)stimated (C)alculated (M)easured	Estimated Center of Mass (mm) (See Notes 2,3&4)
48	100 (E)	x = 299.0 y = 175.0 z = 201

(TBD006)*

Estimated Inertia Matrix (kg–m^2) ± 10% (See Notes 3&4)		
I_{XX} = 1.2	I_{XY} =	I_{XZ} =
I_{YX} =	I_{YY} = 1.0	I_{YZ} =
I_{ZX} =	I_{ZY} =	I_{ZZ} = 1.1

Notes:

* Where the majority of table is TBD the entire table is designated as TBD.

Table IIg. Mass Properties – MPS – Launch and On–Orbit Configuration

All Values Given are (TBR 004)

Mass (kg) (See Note 1)	(%) (E)stimated (C)alculated (M)easured	Estimated Center of Mass (mm) (See Notes 2,3&4)
12.8	100 (E)	x = +142 y = + 102 z = +175

(TBD007)*

Estimated Inertia Matrix (kg–m^2) ± 10% (See Notes 3 & 4)		
I_{XX} = 0.079	I_{XY} =	I_{XZ} =
I_{YX} =	I_{YY} = 0.88	I_{YZ} =
I_{ZX} =	I_{ZY} =	I_{ZZ} = 0.072

Notes:

* Where the majority of table is TBD the entire table is designated as TBD.

Table IIIa. Mechanism Characteristics–VNIR (VSR Telescope Assembly)

Location	see figure
Operation	Position of telescopes change during pointing. Repointing occurs once/day normally with an excursion of +/–8.55 degrees with occasional excursions to +/–24.0 degrees. See the ASTER MICD drawings and figures 2a–1 and 2a–2 for further description of telescope motion.
Mass being moved (kg) (M)easured, (C)alculated, (E)stimated	21.8 Kg **(TBR 005)** (E)
Axis of Rotation Definition	an axis parallel to the instrument X axis offset from the instrument origin by a distance of 455 mm in the +Z direction. See figure 2a–1 for definition.
Center of mass about point of rotation (mm) (with respect to instrument origin) (M)easured, (C)alculated, (E)stimated	X= 278.5 Y= 254.0 **(TBR 005)** (E) Z= 455.0
Inertia (kg–m^2)	1.1 About Pointing Axis
Torque (N–m) Residual	+/– 20 (Max)
Cycle duration (sec)	60 (Max)
Bipolar step time (sec) – (Period)	see figure 3a–1
Maximum impulse (N–m–sec)	see figure 3a–1
For continuously rotating parts **Dynamic Imbalance (kg–mm2)** **Static Imbalance (kg–mm)** **Residual Momentum (N–m–sec)**	N/A
Step frequency (sec)	see figure 3a–1
Amplitude (N–m–sec)	see figure 3a–1
Finite element model node number	325648
Mechanism profiles	figure 3a–1

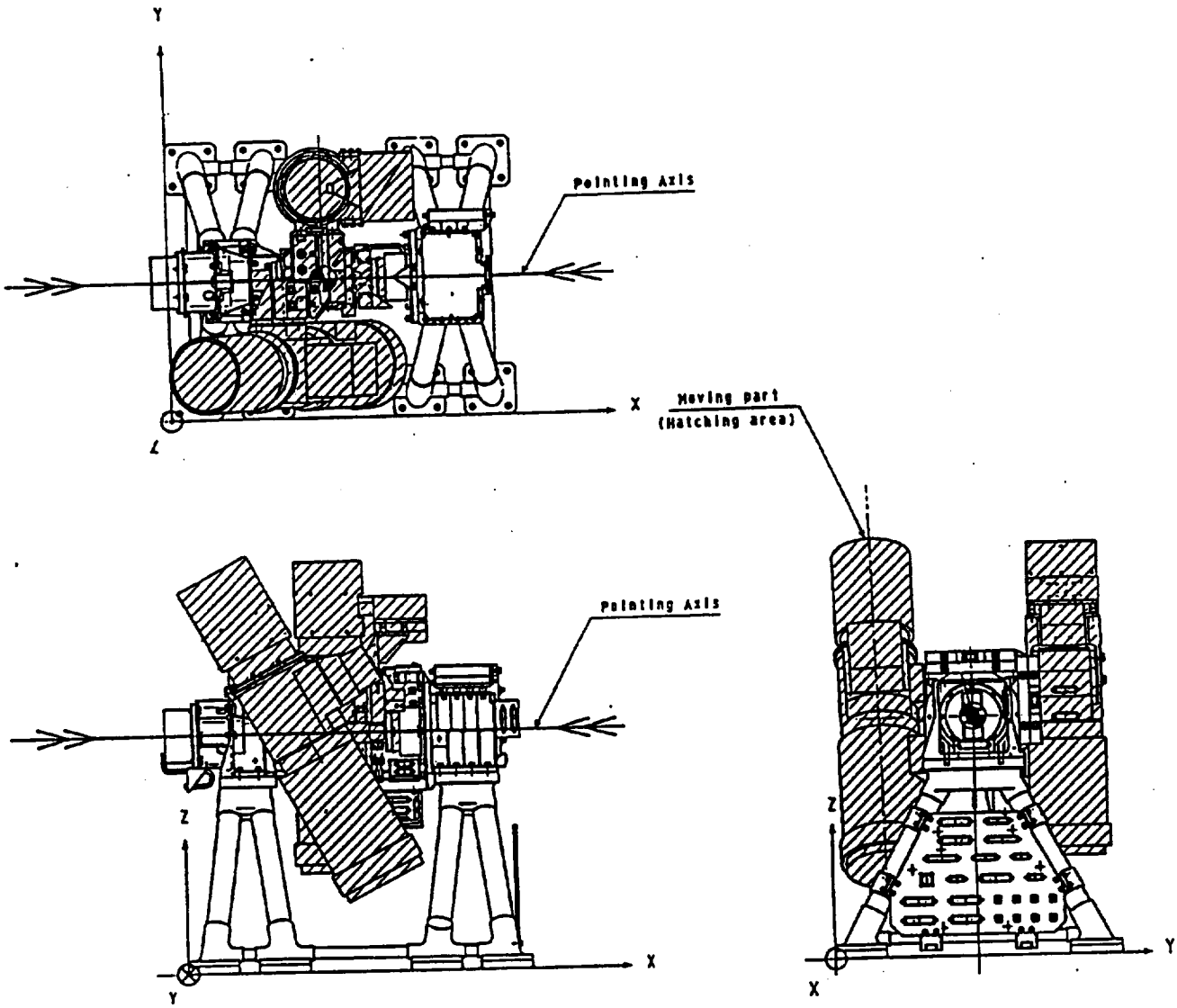

Figure 2a–1. VNIR – VSR Pointing Axis Definition

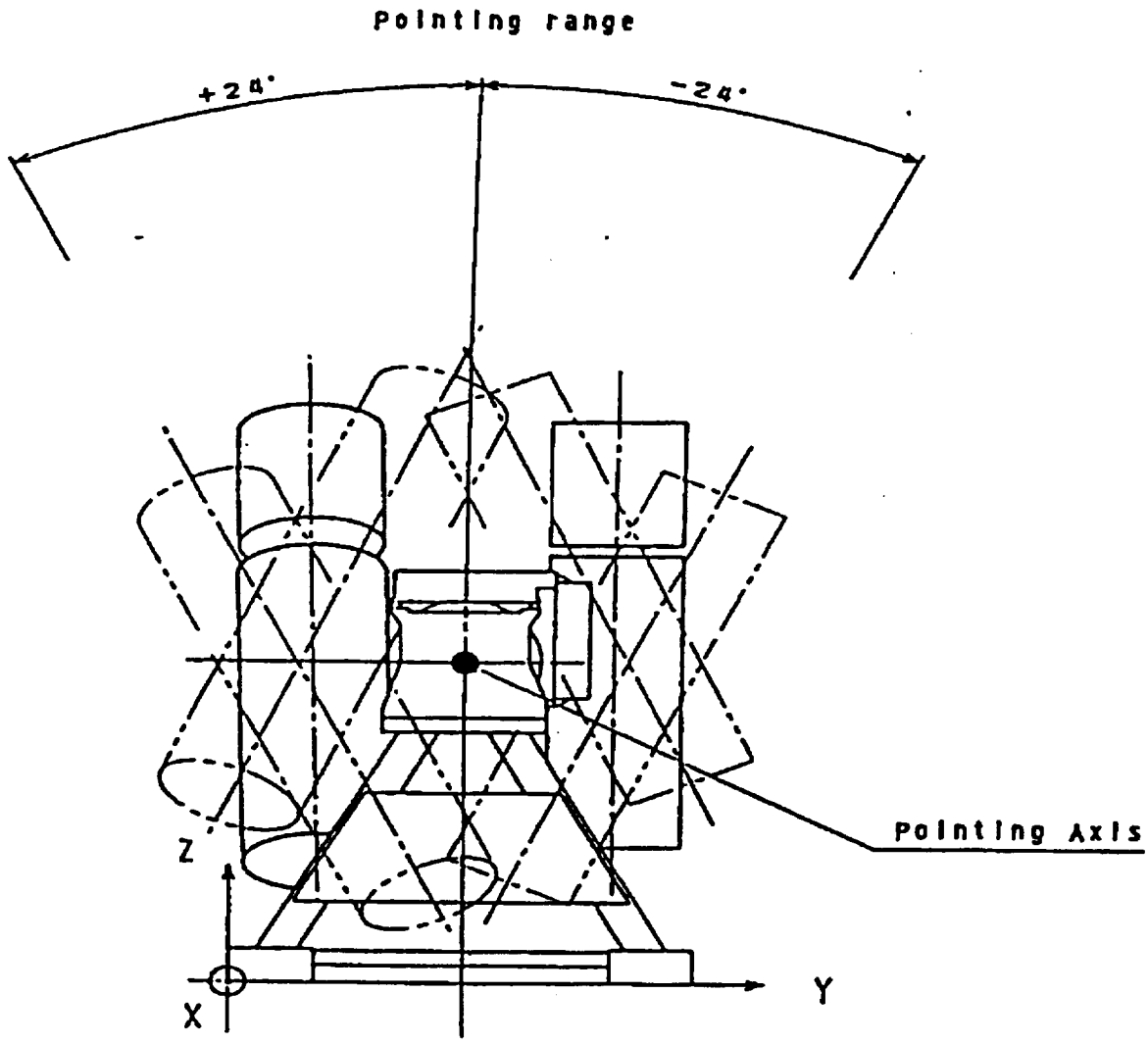

Figure 2a–2. VNIR – VSR Mechanism Movement

Table IIIb. Mechanism Characteristics–SWIR Stirling Cooler Compressor & Displacer (TBR 006)

Location	
Operation	Compressor and displacer operate continuously. The compressor piston moves along a line of action which is parallel to the instrument X axis while the displacer moves along a line of action which is parallel to the insturment Y axis. Cool down mode occurs only in early flight just before science mode, or after an anomaly before returning to science mode. Steady state mode is on at all times during science mode.
Frequency (Hz) [Vibration Frequency]	45
COMPRESSOR & DISPLACER Force Characteristics	See Force profiles in Figure 3b–1
COMPRESSOR & DISPLACER Torque Characteristics	See Torque profiles in Figure 3b–2
Finite element model node number (compressor)	329503
Finite element model node number (displacer)	329691
Upper harmonic frequency profiles	**(TBD 008)**

Notes:
1. Longitudinal axis (parallel to piston translation axis)
2. Lateral axis (Perpedicular to piston translation axis)
3. All forces & torques are 0 – to – peak values.

Table IIIc. Mechanism Characteristics–SWIR Pointing Mirror Mechanism (TBD 009)

Location	
Operation	Active during repointing operations & Calibration (Normally night time)
Mass being moved (kg) (M)easured, (C)alculated, (E)stimated	
Axis of Rotation Definition	
Center of mass about point of rotation (mm) (with respect to instrument origin) (M)easured, (C)alculated, (E)stimated	X= Y= Z=
Inertia (kg–m^2)	
Torque (N–m)	see figure 3c–1
Cycle duration (sec)	60 **(TBR 007)** Pointing for science & observation. 300 **(TBR 007)** Max (one way) for Cal.
On time pulse width (sec)	0.005
Maximum impulse (N–m–sec)	
Step frequency (sec)	
Amplitude	
Finite element model node number	329526
Mechanism profiles	figure 3c–1

Table IIId. Mechanism Characteristics –TIR Scan Mirror Mechanism (TBR 008)

Location						
Operation			Active for all Science Modes. Mirror mechanism moves mirror to scan image. Repointing occurs before and after each observation			
—	**Observation Mode**				**Pointing Mode & Optical Calibration Mode**	
—	**Mirror**		**Reaction Mass**		**Mirror + Reaction Mass + Frame**	
Mass Being Moved (Kg)	2.5	E	2.06	E	7.47	E
Center of Mass about point of rotation (With respect to Inst. Origin) (mm)	X = –312.1 Y = 251.4 Z = 593.3	E	X = –312.1 Y = 323.2 Z = 521.5	E	X = –312.1 Y = 251.4 Z = 599.3	E
Inertia (kg–m^2) (See note 3)	0.022	E	0.022	E	0.084	E
Torque (N–m) (Residual Uncompensated)	**less than 0.01 N–m(0–P)**				*** constant torque ; less than .009 N–m–s**	E
Cycle Duration (Sec) Maximum	0.13194				**N/A**	
Frequency (Hz) Sinusoidal	7.5792				**N/A**	
Finite element model node number	**326990**				**326990**	

Notes:
1) M : Measured, C : Calculated, E : Estimated
2) Residual torque profiles for pointing angle change for observation & calibration
3) Inertia is about axis of rotation

Table IIIe. Mechanism Characteristics– TIR Stirling Cooler Compressor (TBR 009)

Location	
Operation	Continuous
Mass being moved (kg) (M)easured, (C)alculated, (E)stimated	two moving parts: each .022kg
Axis of Rotation Definition	linear motion along (TBD) axis
Center of mass about point of rotation (mm) (with respect to instrument origin) (M)easured, (C)alculated, (E)stimated	X= 312.1 (E) Y= 489.1 (E) Z= 109.3 (E)
Inertia (kg–m^2)	Ixx= 0.0067 Iyy= 0.044 Izz= 0.0488
Torque (N–m)	less than 0.01 N–m
Cycle duration (sec)	0.024
On time pulse width (sec)	N/A
Maximum impulse (N–m–sec)	TBD
Step frequency (sec)	N/A
Amplitude	N/A
Finite element model node number	326992
Mechanism profiles	see
Upper harmonic frequency profiles	**SEE BELOW ***

FREQUENCY	COMPRESSOR FORCE (N)		COMPRESSOR TORQUE (N–m)		
	Longitudinal	Lateral	Roll	Pitch	Yaw
42	0.107	1.160	1.82E–4	2.17E–3	9.28E–4
84	0.610	0.127	1.04E–3	2.37E–4	1.02E–4
126	0.530	0.093	9.01E–4	1.74E–4	7.44E–5

* The above compressor force and torque table is measured data from the TIR pre–EM unit which is similar to the EM sterling cooler. The above table information is to be used in the EOS spacecraft jitter study.

Table IIIf. Mechanism Characteristics–TIR Stirling Cooler Displacer (TBR 010)

Location	
Operation	Continuous
Mass being moved (kg) (M)easured, (C)alculated, (E)stimated	two moving parts: 1) 0.18 kg (E) 2) 0.46 kg (E)
Axis of Rotation Definition	Linear motion along (TBD) axis
Center of mass about point of rotation (mm) (with respect to instrument origin) (M)easured, (C)alculated, (E)stimated	X= 312.1 (E) Y= 514.9 (E) Z= 327.1 (E)
Inertia (kg–m^2)	TBD
Torque (N–m)	less than 0.01 N–m (0–P)
Cycle duration (sec)	0.024
On time pulse width (sec)	N/A
Maximum impulse (N–m–sec)	N/A
Step frequency (sec)	N/A
Amplitude	N/A
Finite element model node number	326993
Mechanism profiles	see
Upper harmonic frequency profiles	**SEE BELOW ***

FREQUENCY	DISPLACER FORCE (N)		DISPLACER TORQUE (N–m)		
	Longitudinal	Lateral	Roll	Pitch	Yaw
42	0.025	0.024	2.5E–6	5.52E–5	5.52E–5
84	0.710	0.050	7.1E–5	1.15E–4	1.15E–4
126	0.183	0.0056	1.83E–5	1.29E–5	1.29E–5

* The above displacer force and torque table is measured data from the TIR pre–EM unit which is similar to the EM sterling cooler. The above table information is to be used in the EOS spacecraft jitter study.

Table IIIg. Mechanism Characteristics–TIR Chopper Mechanism

(TBR 011)	
Location	
Operation	Active for all Science and Calibration modes.
Mass being moved (kg) (M)easured, (C)alculated, (E)stimated	0.121
Axis of Rotation	An axis parallel to the instrument X axis
Center of mass about point of rotation (mm) (with respect to instrument origin) (M)easured, (C)alculated, (E)stimated	X= –463 (E) Y= 124 (E) Z= 413 (E)
Inertia (Kg–m^2)	0.00847 (E)
Torque (N–m)	0.015
Force (N)	See Figure 3e–1
Cycle duration (sec)	0.13194
Bipolar step time (sec)	NA
Maximum impulse (N–m–sec)	NA
frequency (Hz) Sinsusoidal	7.5792 (E)
Amplitude (N)	0.2 (E)
Finite element model node number	326944
Mechanism profiles	Figure 3e–1

Notes:
1) Inertia is about axis of rotation

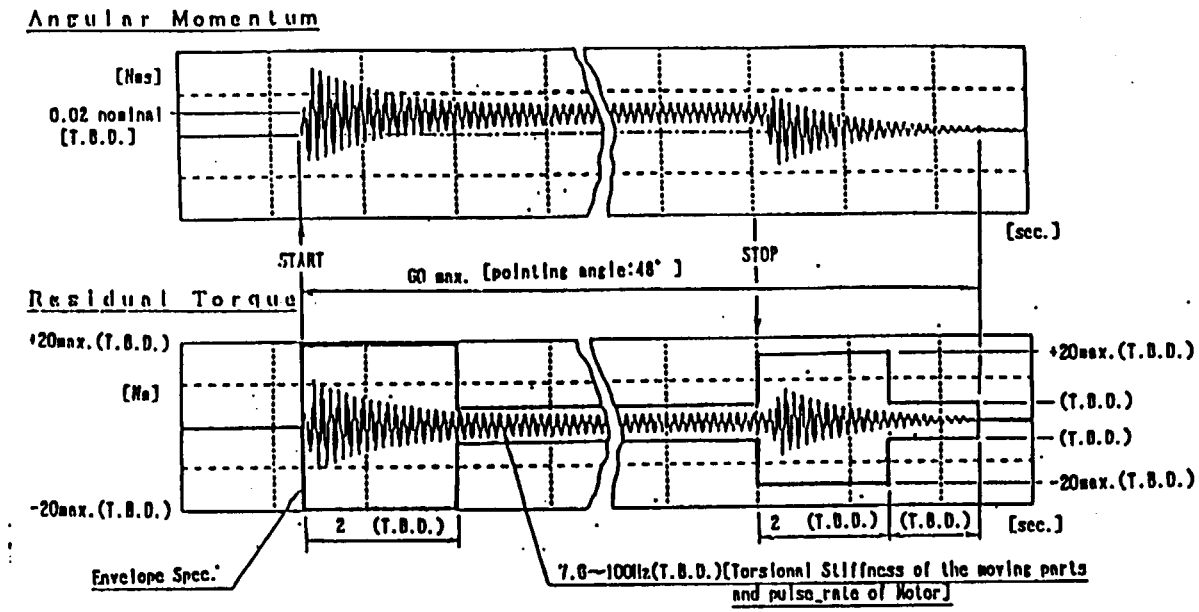

Figure 3a–1. VNIR – VSR Disturbance Profiles

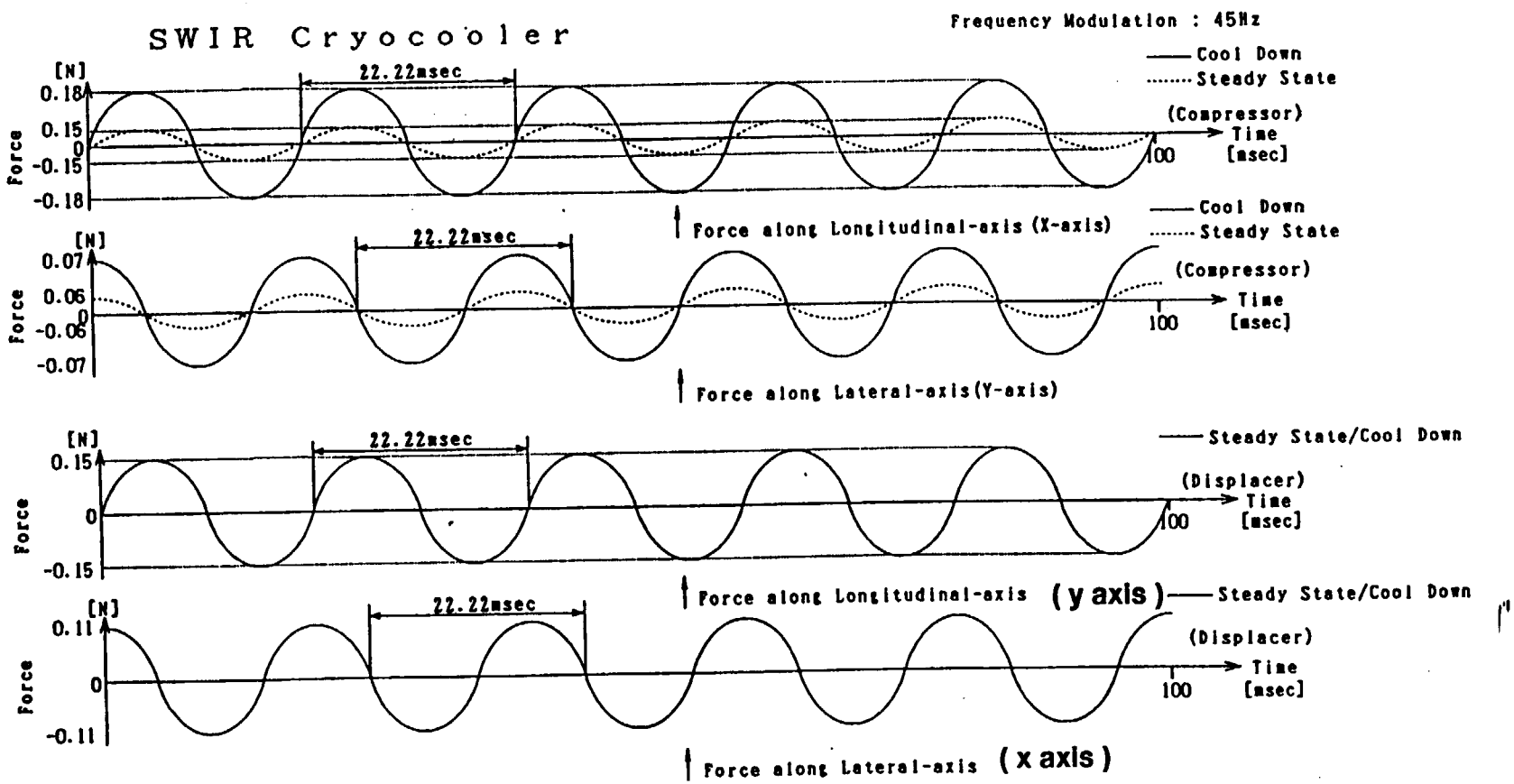

Figure 3b–1. SWIR Stirling Cooler Residual Force Profile (Along the Axis)

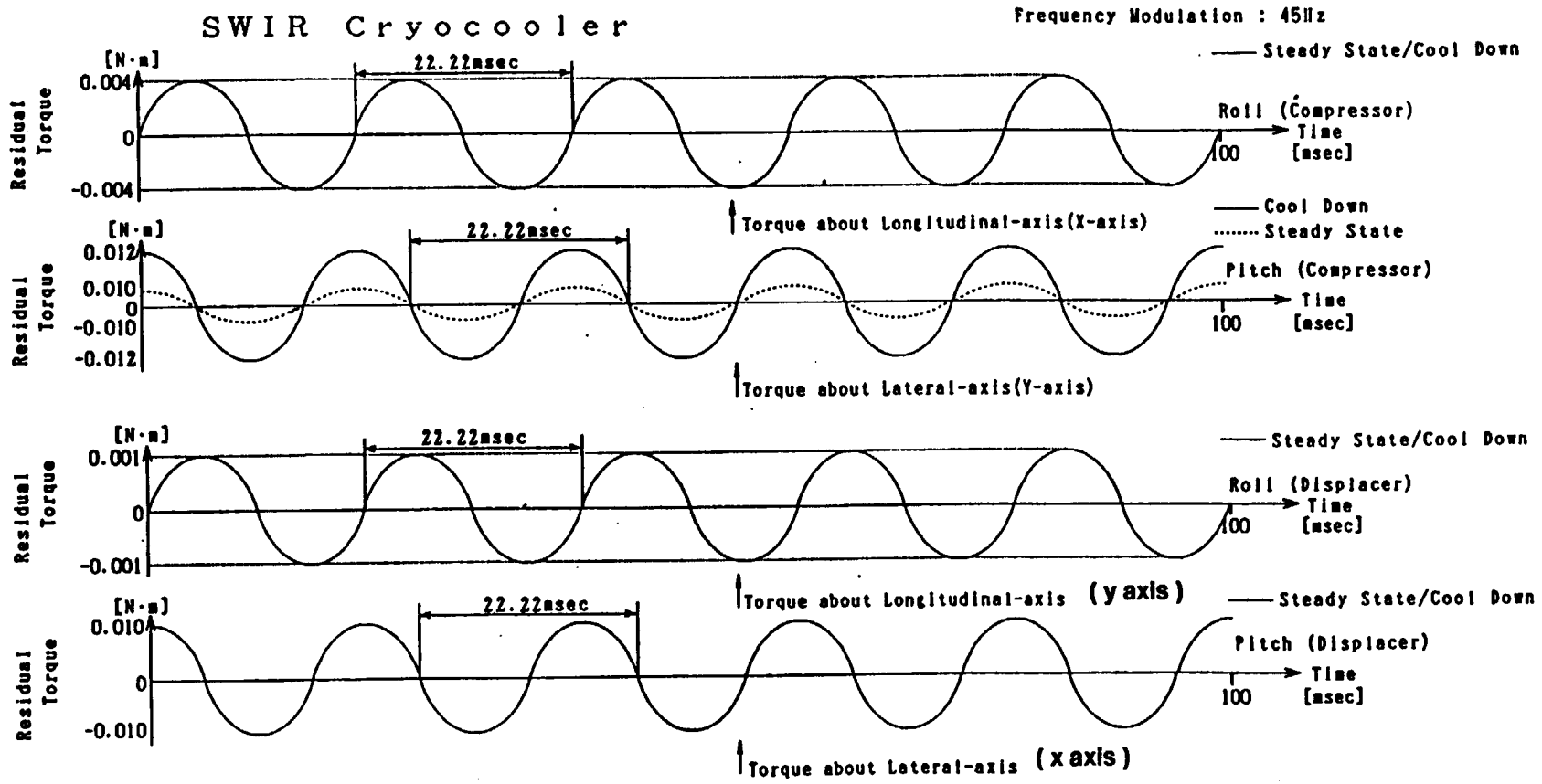

Figure 3b–2. SWIR Stirling Cooler Residual Torque Profile (About the Axis – Steady State)

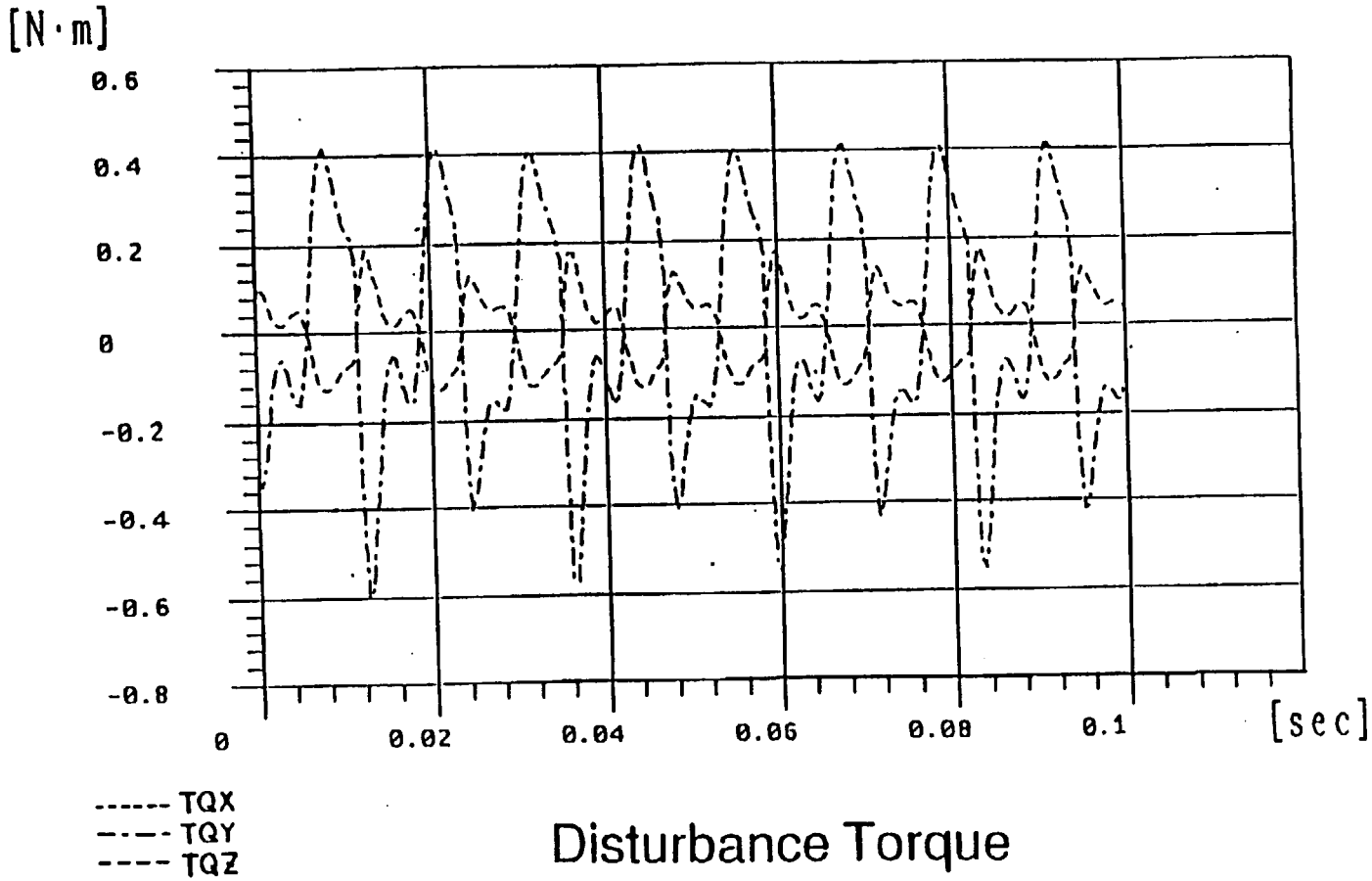

Figure 3c–1. SWIR Pointing Mirror Residual Torque Profile

Size A
Code Ident No. 49671
20008812
Sheet 35

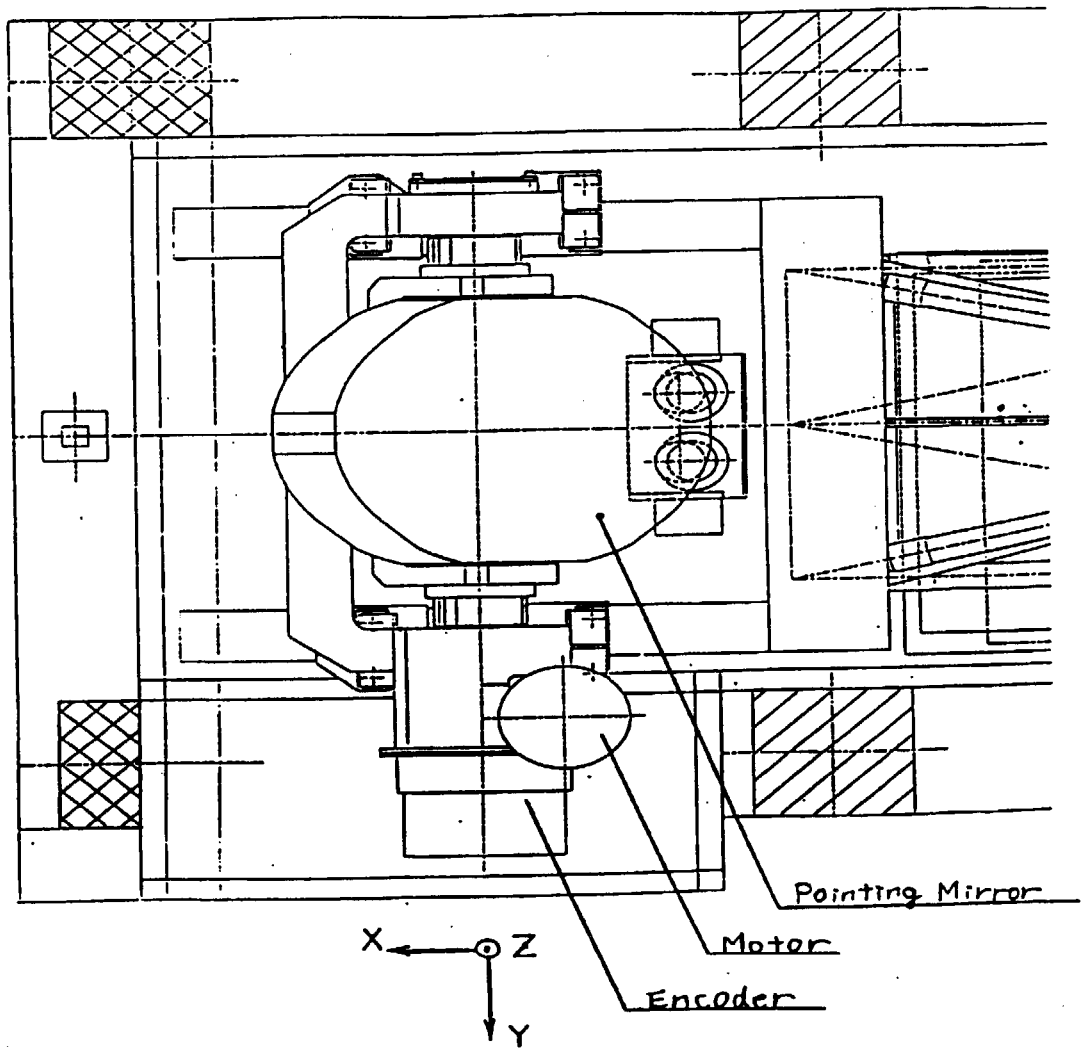

Figure 3c–1a. SWIR Pointing Mirror Local Coordinate System

Size A
Code Ident No. 49671
20008812
Sheet 36

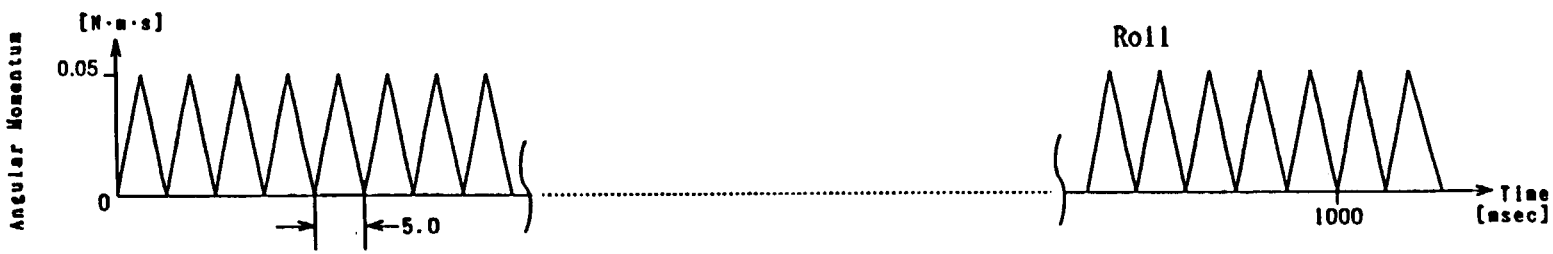

Figure 3c–2. SWIR Pointing Mirror Angular Momentum Profile
(TBR 012)

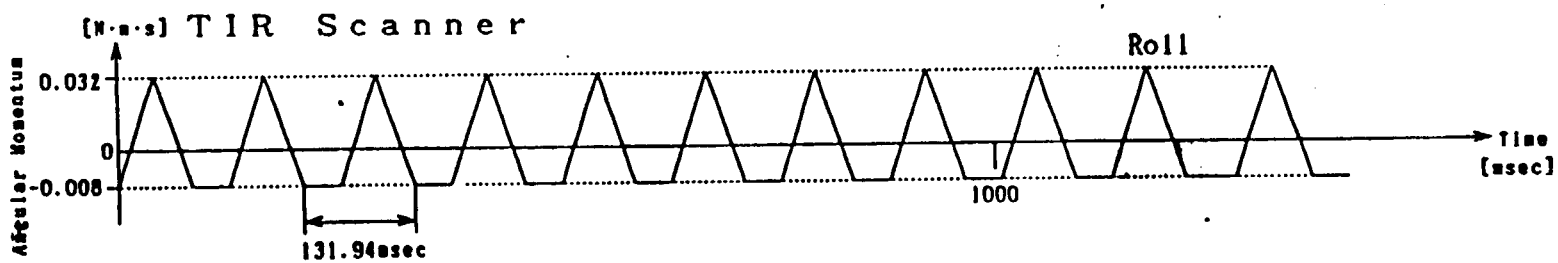

Figure 3d–1. TIR Mirror Scanning Pattern and Angular Momentum Profile

Size A
Code Ident No. 49671
20008812
Sheet 38

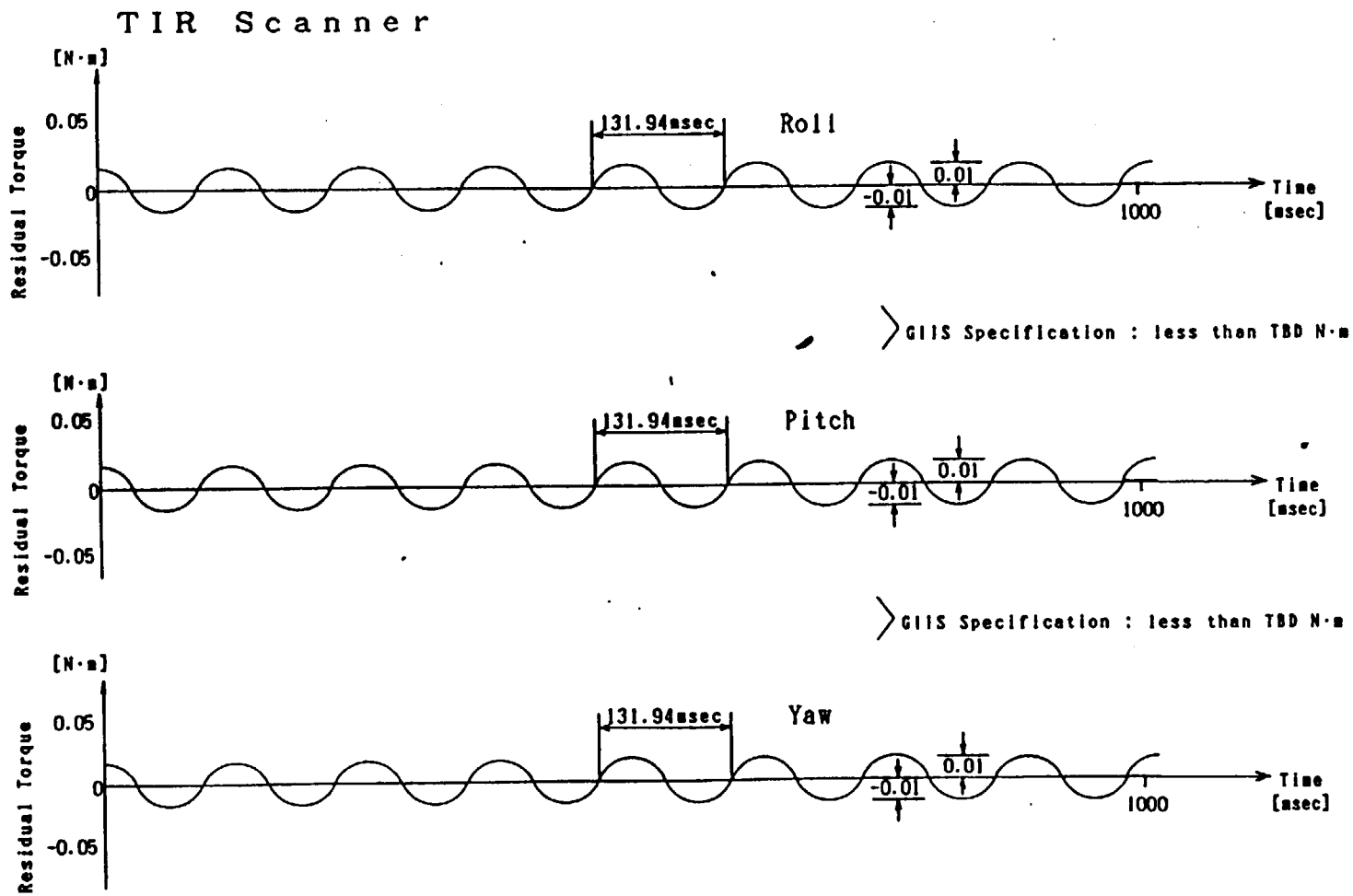

Figure 3d–2. TIR Mirror Residual Torque Scanning Profile

Size A
Code Ident No. 49671
20008812
Sheet 39

TIR Scanner

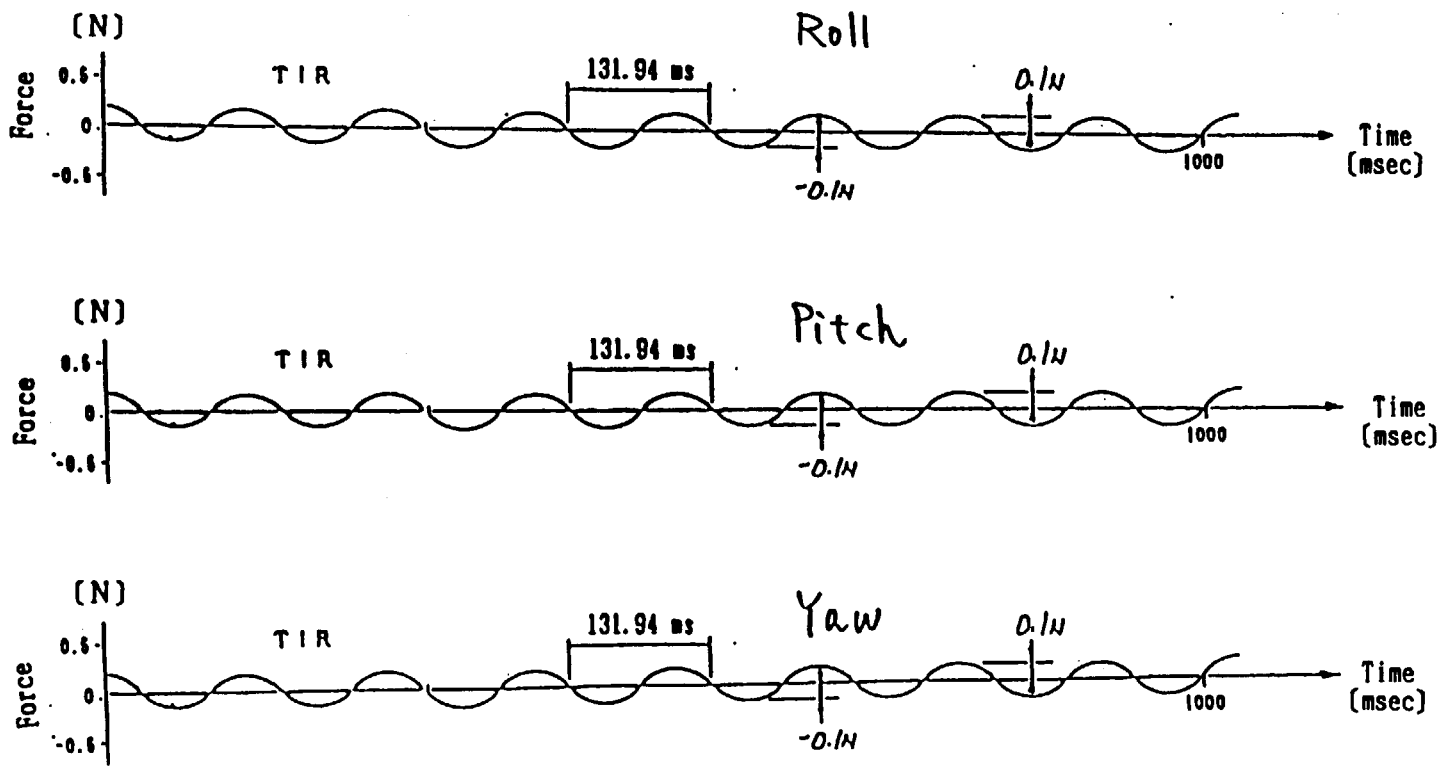

Figure 3e–2. TIR Mirror Residual Force Scanning Profile

Size A
Code Ident No. 49671
20008812
Sheet 40

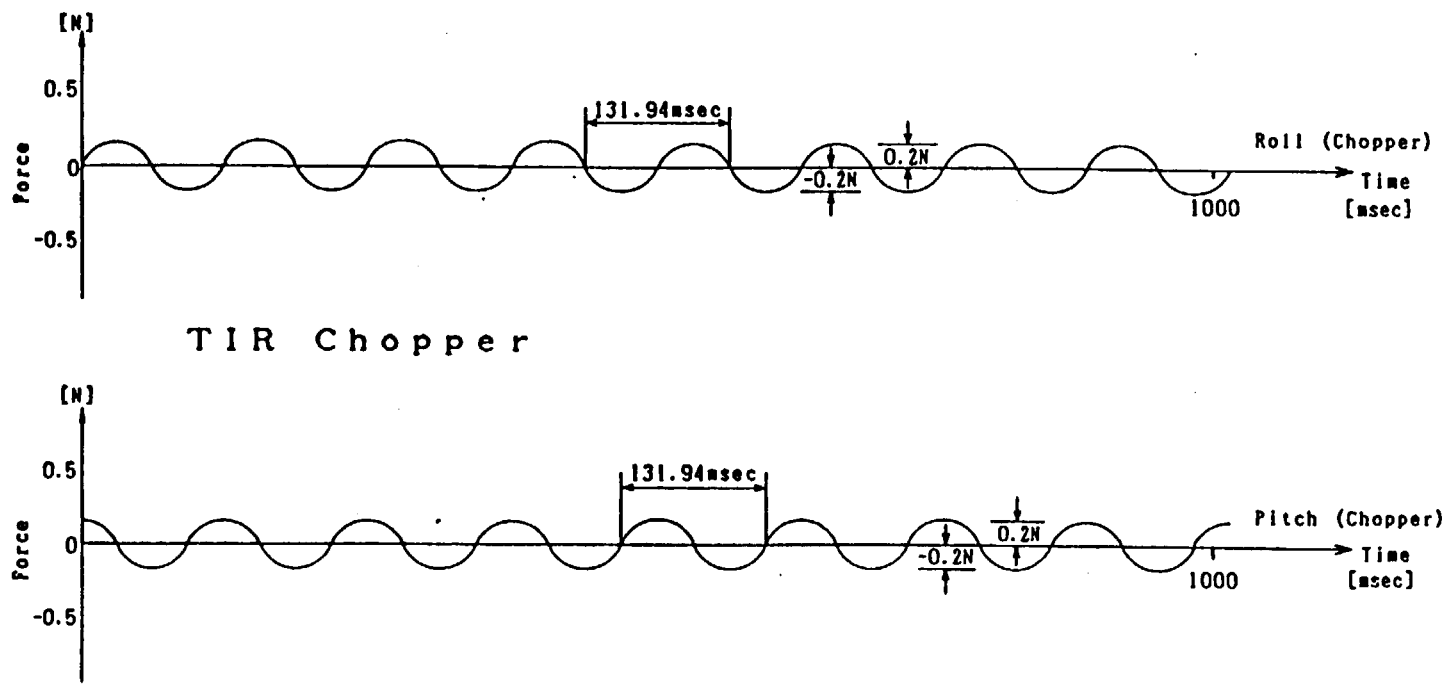

Figure 3e–1. TIR Chopper Residual Force Profile

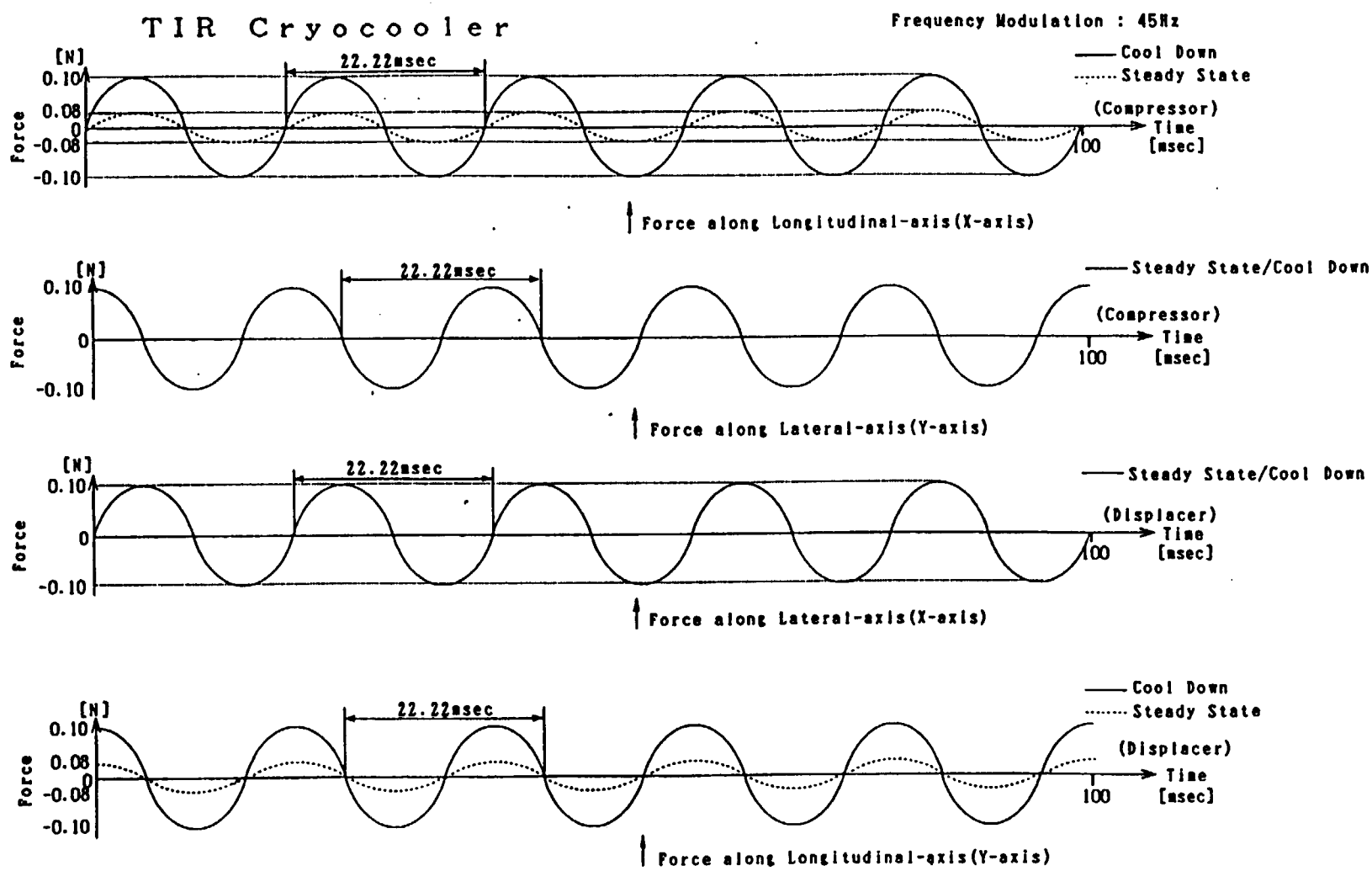

Figure 3f–1. TIR Stirling Cooler Residual Force Profile (along the Axis)

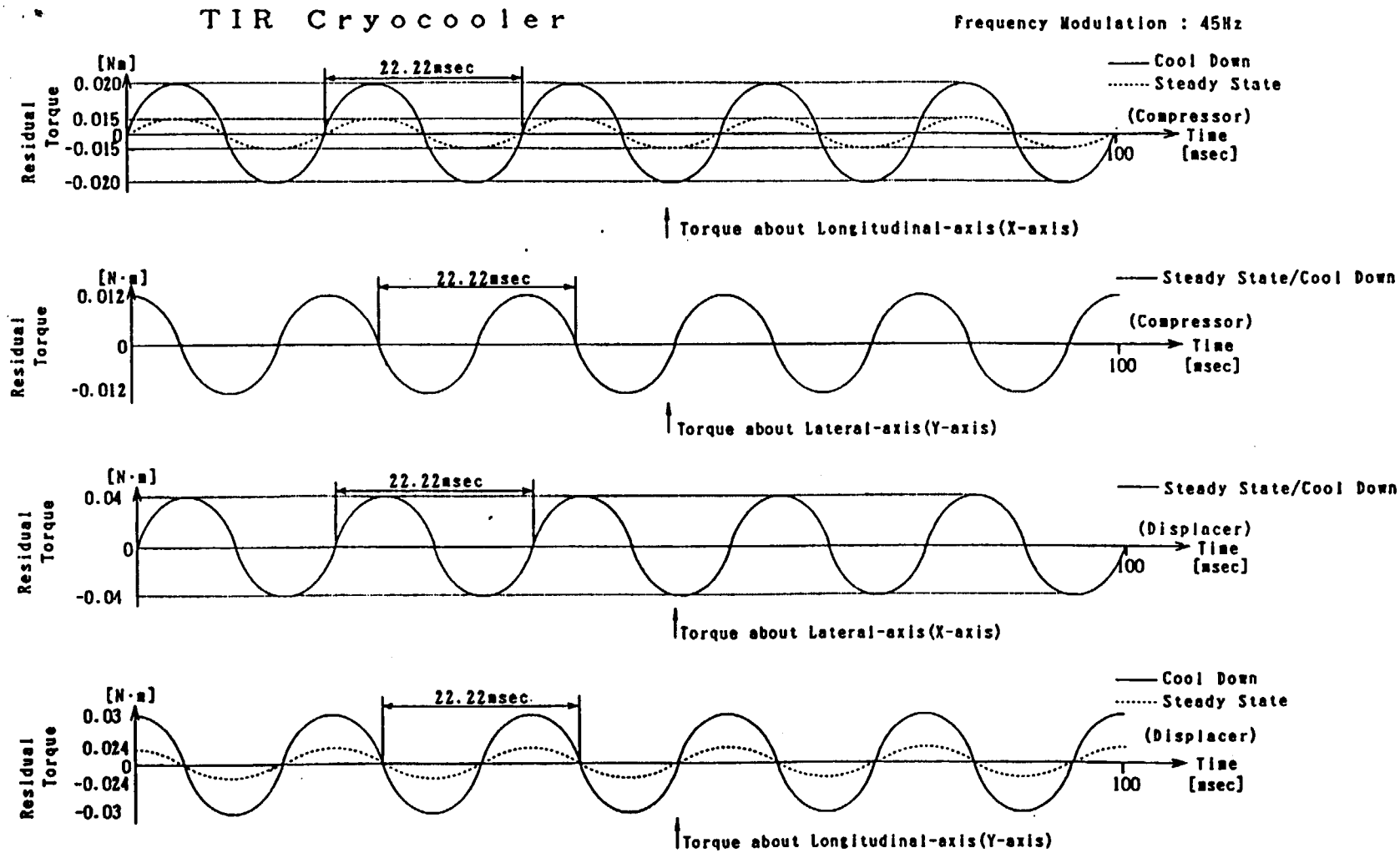

Figure 3f–2. TIR Stirling Cooler Residual Torque Profile (About the Axis)

Table IVa. VNIR (VSR) Finite Element Model

	Revision			
	00	01	02	03
Date–Conv.	3/01/1993			
File name	VSREFBDA.DAT			
Grid/Element/ Property ID Range	325000 – 326499			
Coordinate ID Range *	402			
Frequency (Hz) (First Mode)	69.8			

Note:
The following node numbers and their decriptions are listed below for the purpose of identifying instrument boresight and related information.

Node Number	Description
325647	Nadir Looking Telescope
325641	Backward Looking Telescope

* – the ASTER System coordinate ID range is 401 to 450; the specific range shown in the above table is only for the subject component.

Table IVa. VNIR (VSR) Finite Element Model

	Revision			
	00	01	02	03
Date–Conv.	3/01/1993			
File name	VSREFBDA.DAT			
Grid/Element/ Property ID Range	325000 – 326499			
Coordinate ID Range *	402			
Frequency (Hz) (First Mode)	69.8			

Note:
The following node numbers and their decriptions are listed below for the purpose of identifying instrument boresight and related information.

Node Number	Description
325647	Nadir Looking Telescope
325641	Backward Looking Telescope

* – the ASTER System coordinate ID range is 401 to 450; the specific range shown in the above table is only for the subject component.

Table IVb. VNIR (VEL) Finite Element Model

	Revision			
	01			
Date	3/1/93			
File name	VELEFBD.DAT			
Grid/Element/ Property ID Range	329300–329389			
Coordinate ID Range *	441			
Frequency (Hz) (First Mode)	5815			

* – the ASTER System coordinate ID range is 401 to 450; the specific range shown in the above table is only for the subject component.

Table IVc. TIR Finite Element Model

	Revision			
	01			
Date	3/01/93			
File name	TIREFBDA.DAT			
Grid/Element/ Property ID Range	326850–327999			
Coordinate ID Range *	424, 425, 426			
Frequency (Hz) (First Mode)	52.6			

Note:
The following node numbers and their decriptions are listed below for the purpose of identifying instrument boresight and related information.

Node Number	Description
326906	Lens Assembly
326989	Primary Mirror
326990	Scan Mirror
326993	Displacer

* – the ASTER System coordinate ID range is 401 to 450; the specific range shown in the above table is only for the subject component.

Table IVd. SWIR Finite Element Model

	Revision			
	01			
Date	3/01/93			
File name	SWIRE2FBD.DAT			
Grid/Element/ Property ID Range	326500–326820 & 329390–332999			
Coordinate ID Range *	413			
Frequency (Hz) (First Mode)	64.1			

Note:
The following node numbers and their decriptions are listed below for the purpose of identifying instrument boresight and related information.

Node Number	Description
330903	SWIR Aperture
330902	Pointing Mirror
329772	Focal Plane
330000	Optical Assembly Lens Element
330001	Optical Assembly Lens Element
330002	Optical Assembly Lens Element
330003	Optical Assembly Lens Element
330004	Optical Assembly Lens Element

* – the ASTER System coordinate ID range is 401 to 450; the specific range shown in the above table is only for the subject component.

Table IVe. CSP Finite Element Model

	Revision			
	01			
Date	3/01/93			
File name	CSPEFBD.DAT			
Grid/Element/ Property ID Range	329000–329299			
Coordinate ID Range *	438			
Frequency (Hz) (First Mode)	3432			

Table IVf. MPS Finite Element Model

	Revision			
	01			
Date	3/01/93			
File name	MPSEFBD3.DAT			
Grid/Element/ Property ID Range	328800–329899			
Coordinate ID Range *	435, 436			
Frequency (Hz) (First Mode)	226			

* – the ASTER System coordinate ID range is 401 to 450; the specific range shown in the above table is only for the subject component.

Table V. ASTER Flight Items
(TBD 010)

Item	Part No.	Supplier	Qty

Size	Code Ident No.	
A	49671	20008812
		Sheet 49

Table VI. Launch Accountability Kit
(TBD 011)

Item	Drawing #	Flight	Non–Flight
TIR APERTURE COVER		N/A	1
TIR RADIATOR COVER		N/A	2
VNIR–VSR APERTURE COVER		N/A	2
VNIR – VSR RADIATOR COVER		N/A	3
VSR ALIGNMENT CUBE COVER		N/A	1
VNIR–VEL RADIATOR COVER		N/A	1
SWIR APERTURE COVER		N/A	1
SWIR RADIATOR COVER		N/A	1
CSP RADIATOR COVER		N/A	1
MPS RADIATOR COVER		N/A	1

Table VIIa. VNIR – VSR Alignment Data
(TBD 012)

From	TO	Alignment Offset (arc–second) (See note 1)		
		θX	θY	θZ
Instrument Boresight	Instrument Mounting Plane and Hole Pattern	Requirement 225 Actual TBD – ASTER	Requirement 225 Actual TBD – ASTER	Requirement 225 Actual TBD – ASTER
Instrument Boresight	Instrument Alignment Cube	TBD – ASTER	TBD – ASTER	TBD – ASTER
Instrument Alignment Cube	Drill Template Alignment Cube	TBD – ASTER	TBD – ASTER	TBD – ASTER
Drill Template Alignment Cube	Spacecraft Master Reference Cube	TBD – MMC	TBD – MMC	TBD – MMC
Instrument Alignment Cube (see note 2)	Spacecraft Master Reference Cube	TBD – MMC	TBD – MMC	TBD – MMC
Spacecraft Master Reference Cube	Spacecraft Earth Frame of Reference	TBD – MMC	TBD – MMC	TBD – MMC
Instrument Boresight	Spacecraft Earth Frame of Reference	Requirement 360 Actual	Requirement 360 Actual	Requirement 360 Actual

Notes:

1) Entries are offsets between the nominal instrument and spacecraft axes as defined in Figure 1a.

2) The IAC to MRC measurement at MMC should be a confirmation of the two previous measurements.

Table VIIb. TIR Alignment Data
(TBD 013)

From	TO	Alignment Offset (arc–second) (See note 1)		
		θX	θY	θZ
Instrument Boresight	Instrument Mounting Plane and Hole Pattern	Requirement 225 Actual TBD – ASTER	Requirement 225 Actual TBD – ASTER	Requirement 520 Actual TBD – ASTER
Instrument Boresight	Instrument Alignment Cube	TBD – ASTER	TBD – ASTER	TBD – ASTER
Instrument Alignment Cube	Drill Template Alignment Cube	TBD – ASTER	TBD – ASTER	TBD – ASTER
Drill Template Alignment Cube	Spacecraft Master Reference Cube	TBD – MMC	TBD – MMC	TBD – MMC
Instrument Alignment Cube (see note 2)	Spacecraft Master Reference Cube	TBD – MMC	TBD – MMC	TBD – MMC
Spacecraft Master Reference Cube	Spacecraft Earth Frame of Reference	TBD – MMC	TBD – MMC	TBD – MMC
Instrument Boresight	Spacecraft Earth Frame of Reference	Requirement 360 Actual	Requirement 360 Actual	Requirement 1080 Actual

Notes:

1) Entries are offsets between the nominal instrument and spacecraft axes as defined in Figure 1d.

2) The IAC to MRC measurement at MMC should be a confirmation of the two previous measurements.

Table VIIc. SWIR Alignment Data
(TBD 014)

From	TO	Alignment Offset (arc–second) (See note 1)		
		θX	θY	θZ
Instrument Boresight	Instrument Mounting Plane and Hole Pattern	Requirement 225 Actual TBD – ASTER	Requirement 225 Actual TBD – ASTER	Requirement 520 Actual TBD – ASTER
Instrument Boresight	Instrument Alignment Cube	TBD – ASTER	TBD – ASTER	TBD – ASTER
Instrument Alignment Cube	Drill Template Alignment Cube	TBD – ASTER	TBD – ASTER	TBD – ASTER
Drill Template Alignment Cube	Spacecraft Master Reference Cube	TBD – MMC	TBD – MMC	TBD – MMC
Instrument Alignment Cube (see note 2)	Spacecraft Master Reference Cube	TBD – MMC	TBD – MMC	TBD – MMC
Spacecraft Master Reference Cube	Spacecraft Earth Frame of Reference	TBD – MMC	TBD – MMC	TBD – MMC
Instrument Boresight	Spacecraft Earth Frame of Reference	Requirement 360 Actual	Requirement 360 Actual	Requirement 1080 Actual

Notes:

1) Entries are offsets between the nominal instrument and spacecraft axes as defined in Figure 1c.

2) The IAC to MRC measurement at MMC should be a confirmation of the two previous measurements.

Table VIII. Reference Documents*

Document Number	Date	Document Title	Source

* Table information will be filled in as required.

20043113
CAGE No. 49671
26 August 1993

(PRELIMINARY)

EOS-AM Spacecraft

CLOUDS AND EARTH's RADIANT ENERGY SYSTEM (CERES)

INSTRUMENT FLIGHT OPERATIONS UNDERSTANDING

Prepared Under:
Contract No. NAS5-32500
NASA Goddard Space Flight Center
Greenbelt, Maryland 20771

Prepared by:
Martin Marietta
Astro-Space
P. O. Box 800
Princeton, New Jersey 08543-0800

REVISION LOG

This log identifies those portions of this document which have been revised since original issue.

Revision	Paragraph Number(s) Affected	Rev. Date	Approval
Draft	All	12 February 1993	N/A
Preliminary	All	26 August 1993	N/A

TABLE OF CONTENTS

SECTION/ PARAGRAPH	TITLE	PAGE
1	INTRODUCTION	1
1.1	Purpose	1
1.2	Scope	1
2	DOCUMENTATION	2
2.1	Applicable Documents	2
2.2	Information Documents	2
3	INSTRUMENT DEFINITION	3
3.1	Basic Description	3
3.2	Instrument Operations	9
3.2.1	Operating Modes, States and Configurations	9
3.2.2	Microprocessor Operation	16
3.2.3	Instrument Commands	17
3.2.4	Instrument Telemetry	18
3.2.4.1	Science Data	18
3.2.4.2	Engineering Data	18
3.2.4.3	Housekeeping Data	18
3.2.5	Bus Data Unit	18
3.2.6	Operating Constraints	19
3.2.6.1	Categories of Constraint/Restraints	19
3.2.6.2	CERES Operating Constraints	19
3.2.7	Instrument Activation	20
4	OPERATIONAL SYSTEM DEFINITION	21
4.1	Spacecraft Bus	21
4.1.1	Command and Telemetry Systems	23
4.1.2	Spacecraft Controls Computer	25
4.1.2.1	Spacecraft Controls Computer Description	25
4.1.2.2	Spacecraft Controls Computer Operation	28
4.1.3	Command and Telemetry Interface Unit	32
4.1.4	Science Formatting Equipment	36
4.1.5	Solid State Recorder	39
4.1.6	Bus Data Unit	46
4.1.7	Initial Spacecraft Operation	46
4.1.8	Spacecraft Maneuver Operations	47
4.1.9	Autonomous Operations	48
4.1.10	Spacecraft Bus Operating Modes	48
4.1.11	Spacecraft Bus - Instrument Operating Modes Relationships	54

TABLE OF CONTENTS (continued)

SECTION/ PARAGRAPH	TITLE	PAGE
4.2	Ground System	56
4.2.1	Space Network	56
4.2.2	FDF	58
4.2.3	NASCOM	59
4.2.4	Science Support Networks	59
4.2.5	Alternate Space/Ground Links	60
4.2.6	EOSDIS	60
4.2.6.1	EDOS	60
4.2.6.2	ECOM	61
4.2.6.3	ECS	61
4.2.6.3.1	FOS	62
4.2.6.3.2	SDPS	64
4.2.6.3.3	CSMS	65
5	FUNCTIONAL RESPONSIBILITY ALLOCATIONS	66
5.1	Planning and Scheduling	66
5.1.1	Long Term Planning	67
5.1.2	Initial Scheduling	67
5.1.3	Daily Planning and Scheduling	68
5.1.4	Planning Aids	69
5.2	Uplink Generation	69
5.3	Real-Time Operations	70
5.4	Performance Verification	71
5.5	Database and Software Maintenance	71
5.6	Early Orbit Operations	72
5.6.1	Launch - Orbit Acquisition Mission Phases	73
5.6.2	Activation	77
5.6.3	Transition to Orbital Operations	78
5.7	Spacecraft Maneuvers	79
5.8	Special Observations	79
5.9	Contingencies	79
6	INTERFACE EXCHANGE ITEMS	82
6.1	Planning and Scheduling	82
6.2	Command Generation	83
6.3	Real Time Operations	83
6.4	Analysis	83
6.5	Operations Database	84
6.6	Other Interface Exchange Items	84

TABLE OF CONTENTS (continued)

SECTION/ PARAGRAPH	TITLE	PAGE
7	JOINT OPERATING PROCEDURES	85
7.1	PI/EOC FOT Interface	85
7.1.1	Daily Operations Planning	85
7.1.2	Command Generation	86
7.1.3	Special Operations	86
7.1.4	EOC Database	86
7.1.5	Microprocessor Load Verification	86
7.2	PI/EOC Command Management Interface	87
7.2.1	Operations Plans	87
7.2.2	Planning Aids	87
7.2.3	Command Generation	87
7.2.4	Performance Feedback	87
7.3	PI/FOT Interface	88
7.3.1	Real Time Operations	88
7.3.2	Special Operations	88
7.3.3	Initial Operations	88
7.3.4	Performance Verification	88
7.4	PI/DAAC Interface	89
7.5	PI/ Access to Telemetry	89
8	IMPLEMENTATION AGREEMENTS	90
8.1	Flight Operations Database	90
8.1.1	Commands	90
8.1.2	Instrument Telemetry	90
8.1.3	Instrument Limits	90
8.1.4	Database Approval	91
8.2	Operational Displays	91
8.3	Operations Procedures	91
8.3.1	EOC Definition	91
8.3.2	I&T Procedures to EOC Operations Procedures Conversion	91
8.3.3	I&T Databases to EOC Operations Databases Conversion	92
8.3.4	Flight Unique Procedures	92
8.3.5	Procedure Submittal	92
8.3.6	Approved EOC Procedures	92
8.3.7	Procedure Verification	92
8.4	Narrative Procedures	92
8.4.1	Standard Operating Procedures	93
8.4.2	Contingency Operating Procedures	93

TABLE OF CONTENTS (continued)

SECTION/ PARAGRAPH | TITLE | PAGE

APPENDIX I

10 SPACECRAFT CONTROLS COMPUTER INSTRUMENT REQUIREMENTS 94
10.1 Stored Command Requirements 94
10.1.1 Absolute Time Commands 94
10.1.2 Relative Time Command Sequences 94
10.2 Telemetry Monitor Requirements 94

APPENDIX II

20 INSTRUMENT COMMAND PROCESSING REQUIREMENT .....
20.1 Activity Planning Requirements 95
20.1.1 Activity Definition 95
20.1.2 Event Definition 95
20.1.3 Activity Scheduling 95
20.2 Constraint Check Requirements 95
20.2.1 Command Level 95
20.2.2 Activity Level 95
20.2.3 Schedule Conflicts 96
20.3 Real-Time Command Requirements 96
20.3.1 Utilization Plans 96
20.3.2 Command Generation Capabilities 96
20.3.3 Transmission Requirements 96

TABLE OF CONTENTS (continued)

SECTION/ PARAGRAPH	TITLE	PAGE
20.4	Microprocessor Load Handling Requirements	96
20.4.1	Uplink Message Structures	96
20.4.2	Transmission Requirements	96
20.5	Command Database Requirements	96
20.5.1	Command Definition	97
20.5.2	Unique Command Structures	97
20.5.3	Activity Definitions (EOC Command Management)	97
20.5.4	Stored Command Sequences (EOC Command Management)	97
20.5.5	Real-Time Command Sequences (EOC)	97
20.5.6	Microprocessor Loads	97
20.5.7	Utilization Constraints	97

APPENDIX III

30	TELEMETRY PROCESSING REQUIREMENTS	98
30.1	Decommutation Requirements	98
30.1.1	Engineering Telemetry Format	98
30.1.2	Science Telemetry Format (20 Mbps)	98
30.2	Derived Function Generation Requirements	98
30.3	Status Determination Requirements	98
30.3.1	Mode Definition	98
30.3.2	Event/Mode-Change Detection	98
30.4	Uplink Verification Requirements	99
30.4.1	Command Verification	99
30.4.2	Microprocessor Load Verification	99
30.5	Health and Safety Monitoring Requirements	99
30.5.1	Limit-Check Requirements	99
30.5.2	Alarm Requirements	99
30.6	Display Generation Requirements	99
30.6.1	Parameter Calibration	99
30.6.2	CRT Page Display	100
30.6.3	Strip-Chart Recorder Displays	100
30.6.4	Hardcopy Outputs	100

TABLE OF CONTENTS (continued)

SECTION/ PARAGRAPH	TITLE	PAGE
30.7	EOC Telemetry Database Requirements	100
30.7.1	Telemetry Function Definition	100
30.7.2	Derived Function Definition	100
30.7.3	Mode/Event Definition	100
30.7.4	Limit Check Thresholds	100
30.7.5	Alarm Generation Criteria	100
30.7.6	Command Verification Criteria	101
30.7.7	Display Definition	101
30.7.8	Calibration Parameters	101

APPENDIX IV

40	INSTRUMENT OPERATIONAL ACTION REQUIREMENTS	
40.1	Contingency Action Requirements	102
40.1.1	Emergency Power-Down	102
40.1.2	Limits/Alarm Reaction	102
40.1.3	Spacecraft Safe hold (SCC running)	102
40.1.4	SCC Halted	102
40.1.5	Other On-board Computers Halted	102
40.1.6	Uplink Transmission Failure	102
40.2	Preactivation Requirements	102
40.3	Spacecraft Maneuver Accommodation	103
40.3.1	Orbit Adjust	103
40.4	Alignment/Calibration Requirements	103
40.5	Special Observation Requirements	103

APPENDIX V

50	PLANNING AID REQUIREMENTS	104
50.1	Parameter Definition	104
50.1.1	Long Term	104
50.1.2	Short Term	105
50.2	Parameter Specifications	105
50.2.1	Information Accuracy	105
50.2.2	Data Precision	105
50.2.3	Data Frequency	106
50.3	Information Handling Requirements	106
50.3.1	Format	106
50.3.2	Packaging	106

TABLE OF CONTENTS (continued)

SECTION/ PARAGRAPH	TITLE	PAGE
50.4	Access Timeline Requirements	106
50.4.1	Lead Time	106
50.4.2	Retention	106

APPENDIX VI

60	SPECIAL ACTIVATION REQUIREMENT	107
60.1	Commanding Requirements	107
60.1.1	Special Command Sequences	107
60.1.2	Special Command Constraints	107
60.1.3	Real-time Command Generation	107
60.1.4	Special Command Transmission Requirements	107
60.2	Telemetry Processing Requirements	107
60.2.1	Special Telemetry Formats	107
60.2.2	Special Processing Functions	108
60.2.3	Special Processing Parameters	108
60.2.4	Special Displays	108
60.2.5	Strip Chart Recorder	108
60.3	Remote Support Coordination Requirements	108
60.3.1	Quick-look Playback Handling	108
60.3.2	Voice Communications	108
60.4	Facility Requirements	108

APPENDIX VII

70	ABBREVIATIONS	109

LIST OF FIGURES

FIGURE	TITLE	PAGE
1	CERES Elevation Scan Positions and Limitations	4
2	Typical Cross-Track Scan Profile (Fixed Azimuth Mode)	5
3	Biaxial Scan Profile (Biaxial Mode)	6
4	Science Data Packet Format	7
5	CERES Nominal Operational Timeline	10
6	EOS-AM Spacecraft Mission Phases	22
7	Uplink Paths	23
8	Downlink Paths	24
9	Absolute Time Stored Command Structure	28
10	Absolute Time Stored Command Operation	29
11	Relative Time Command Sequence Structure	30
12	Relative Time Command Sequence Operation	31
13	CTIU Command Processing Flow	33
14	CTIU Telemetry Processing Flow	34
15	SFE Interface Block Diagram	38
16	SSR Basic Configuration	39
17	SSR Science Data Buffer Utilization	41
18	SSR Typical Operating Scenario	42
19	SSR Operation Profile	45
20	Typical Operational Initialization Phase Activities Timeline	46

LIST OF FIGURES (continued)

FIGURE	TITLE	PAGE
21	Orbit Maintenance Scenario	47
22	Spacecraft Operating Modes Availability	49
23	Top Level Space Network Scheduling Process	57
24	EOC / Space Network Scheduling Timeline	58
25	EOC Staffing Structure	62
26	CERES IST User Perspective	64
27	Launch / Ascent Phase Timeline	74
28	Orbit Acquisition Mission Phase Timeline	76
29	DELTA-V Activity Flow	77
30	PI Facility / EOC FOT Interface	85

LIST OF TABLES

TABLE	TITLE	PAGE
I	CERES Operating Modes	11
II	Proposed SSR Buffer Sizing	40
III	Spacecraft Bus and CERES Operating Modes	55

TO BE DETERMINED (TBD) LIST

TBD	SEC. / PAGE	DESCRIPTION	RESPONSIBLE	DUE

This list will be added with the final update.

TO BE REVIEWED (TBR) LIST

TBR	SEC. / PAGE	DESCRIPTION	RESPONSIBLE	DUE

This list will be added with the final update.

TO BE SUPPLIED (TBS) LIST

TBS	SEC. / PAGE	DESCRIPTION	RESPONSIBLE	DUE

This list will be added with the final update.

(This page intentionally left blank.)

1 INTRODUCTION

This Instrument Flight Operations Understanding (IFOU) is a statement of the EOS-AM community's understanding regarding the Clouds and the Earth's Radiant Energy System (CERES) flight operations plans and requirements. The EOS-AM CERES consists of two identically designed instruments. Each instrument will operate independently.

This Instrument Flight Operations Understanding will be updated periodically as requirements evolve and are further defined. Inputs are welcomed from the Instrument Team, Flight Operations Team, EOS Ground Systems, NASA Institutional Facilities, and the EOS-AM Project entities.

1.1 Purpose

This IFOU will be used by the Flight Operations Team (FOT) and EOS Operations Center (EOC) support personnel in defining prelaunch preparation efforts and in verifying operational readiness prior to launch. Requirements for specific types of operational support will be defined and implemented consistent with this IFOU. This IFOU will be used to ensure that instrument needs are properly reflected in other documentation.

1.2 Scope

This document describes the EOS-AM Spacecraft CERES operations on-orbit and instrument flight operations support. Interactivity with ground systems control and interconnectivity to the EOS ground systems segment are described. Institutional interfaces between Spacecraft, applicable ground systems and the end-user are included. The flight operations scheduling, planning, and operations philosophy are included. Aspects of the Earth Observing System Data and Information System (EOSDIS), as well as the external systems / facilities with which the Spacecraft flight operations elements interface, are only addressed as required to clarify these concepts. The focus is from the Flight Operations Team's perspective

The understandings stated herein are explicitly subordinate to interfaces between the CERES instruments and the EOS-AM Spacecraft, as defined in the most recent issue of the documents listed in Section 2.

This document does not take precedence over any of the requirements, specifications, documents or interfaces associated with the Spacecraft or affiliated ground systems.

2 DOCUMENTATION

2.1 Applicable Documents

The concept and content of this document are consistent with the documents listed below:

(GSFC) - 421-10-01 30 Oct. 1992	Requirements Document for the EOS-AM Spacecraft
(GSFC) - 420-03-02 08 Dec. 1992	General Instrument Interface Specification
20005396 (SEP-101) 15 May 1992	EOS-AM Spacecraft Contract End Item Specification
(GSFC) - 421-12-12-02 Date: TBD	Unique Instrument Interface Document for CERES
(GSFC) - 420-05-02 13 Nov. 1992	Performance Assurance Requirements for the EOS-AM Observatories
20008820 Date: TBD	CERES Interface Control Document (ICD)

2.2 Information Documents

The following documents amplify or clarify the information presented in this document.

20008529 (OPD-110) 18 May 1992	EOS-AM Spacecraft Operations Requirements
EOS-DN-SE&I-010 15 May 1992	EOS Baseline Description Document (BDD)
EOS-DN-SE&I-031 23 Apr. 1992	Command and Telemetry Requirements Analysis
EOS-DN-C&DH-032 15 Dec. 1991	Command and Telemetry Concept Definition
GSFC-510-30CD/0191 26 Oct. 1992	Earth Observing System Data and Information System (EOSDIS) Flight Operations Segment (FOS) Operations Concept (Revision 3)
20008502 (UID-101) 04 Sept. 1992	General Instrument Interface Handbook

3. INSTRUMENT DEFINITION

The understandings regarding the CERES instruments are as follows:

3.1 Basic Description

CERES consists of two identically designed, broadband, scanning radiometers. The two instruments are designated as CERES FORE and CERES AFT, corresponding to their location on the Spacecraft. One instrument operates in the fixed-azimuth mode in which it scans the Earth's surface back and forth from limb to limb to provide complete spatial coverage. The other operates in a biaxial mode in which the elevation scan plane is rotated about the azimuth axis in - 90° from the nominal cross-track reference to the satellite path. This biaxial operating mode provides angular sampling for improved angular model distribution development and error reductions in determining Top-of-the-Atmosphere radiant fluxes. Both instruments are capable of operating in either mode, but only one instrument at a time will be operated in the biaxial mode.

Figure 1 depicts the CERES instrument elevation scan positions and limitations. Figure 2 shows a typical cross track scan profile (Fixed Azimuth Mode) and Figure 3 shows a typical biaxial scan profile (Biaxial Mode).

CERES utilizes three broadband thermistor bolometers with spectral separation provided by optical filters. Each of the instruments has three detector channels as follows:

a. Shortwave channel (0.3 to 5.0 μm) measuring reflected sunlight

b. Long wave channel (8 to 12 μm) measuring Earth-emitted radiation predominately in the atmospheric window

c. Total channel (0.3 to 50 μm)

The three detectors are coaligned and view an approximately 20 km^2 area of the Earth surface. A 6.6 second elevation scan cycle begins with the detectors looking at cold space on one side of the Earth. The instrument scans in elevation across the Earth limb to cold space on the other side and back again. In the biaxial scan mode, an instrument adds an azimuthal scan from +90° to -90° (at a rate of 4° to 6° per second) with respect to the nominal cross-track azimuth position while continuing the 6.6 second elevation scan cycle. This produces a "star burst" like pattern of the detector footprint on the Earth's surface.

The three detectors are sampled at a 100 Hz rate, and samples are digitized to 12 bits per sample or 3600 bits per second for the 3 sensor assemblies on an instrument. Azimuth and elevation angles are sampled at the same rate and digitized to 16 bits.

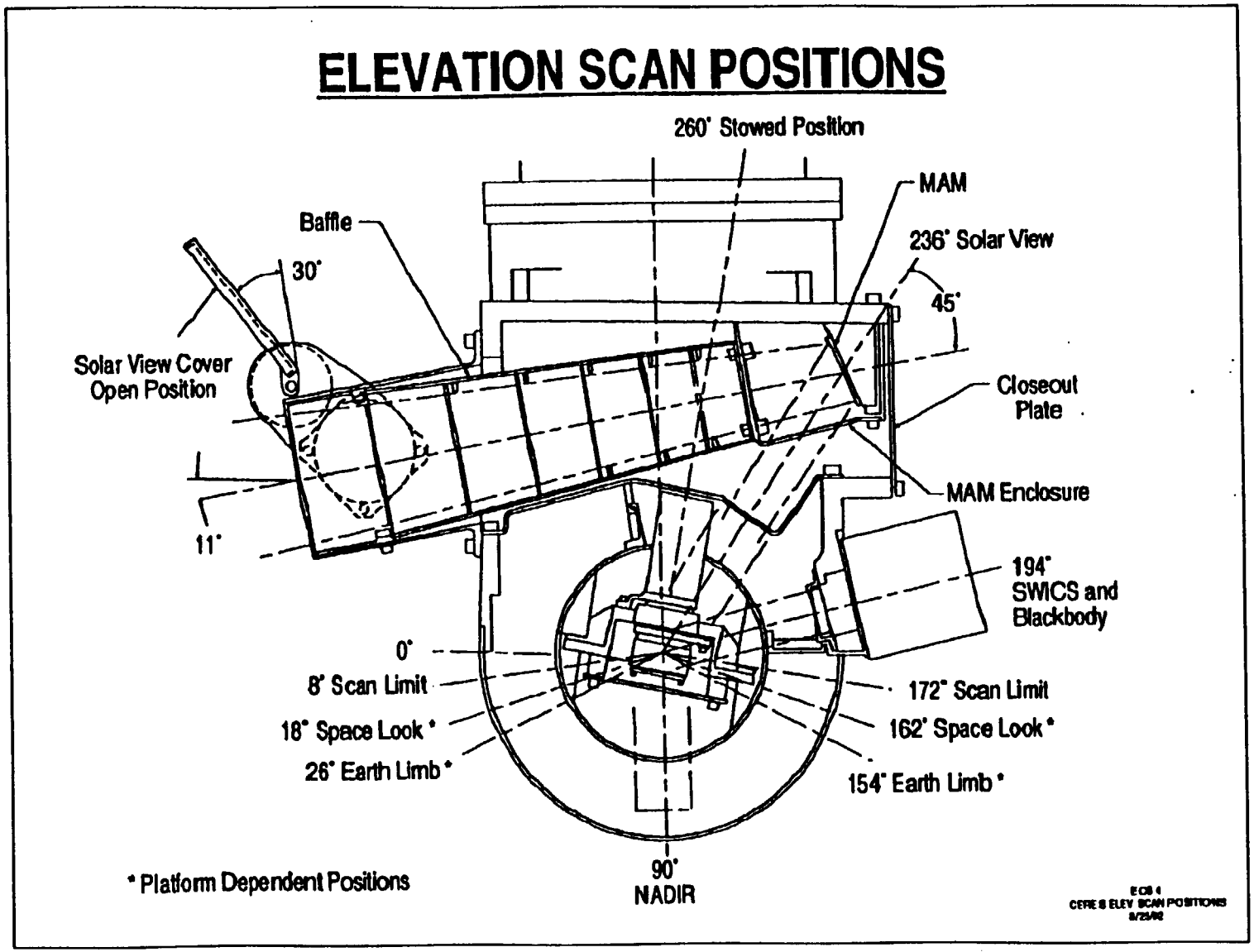

FIGURE 1 CERES ELEVATION SCAN POSITIONS AND LIMITATIONS

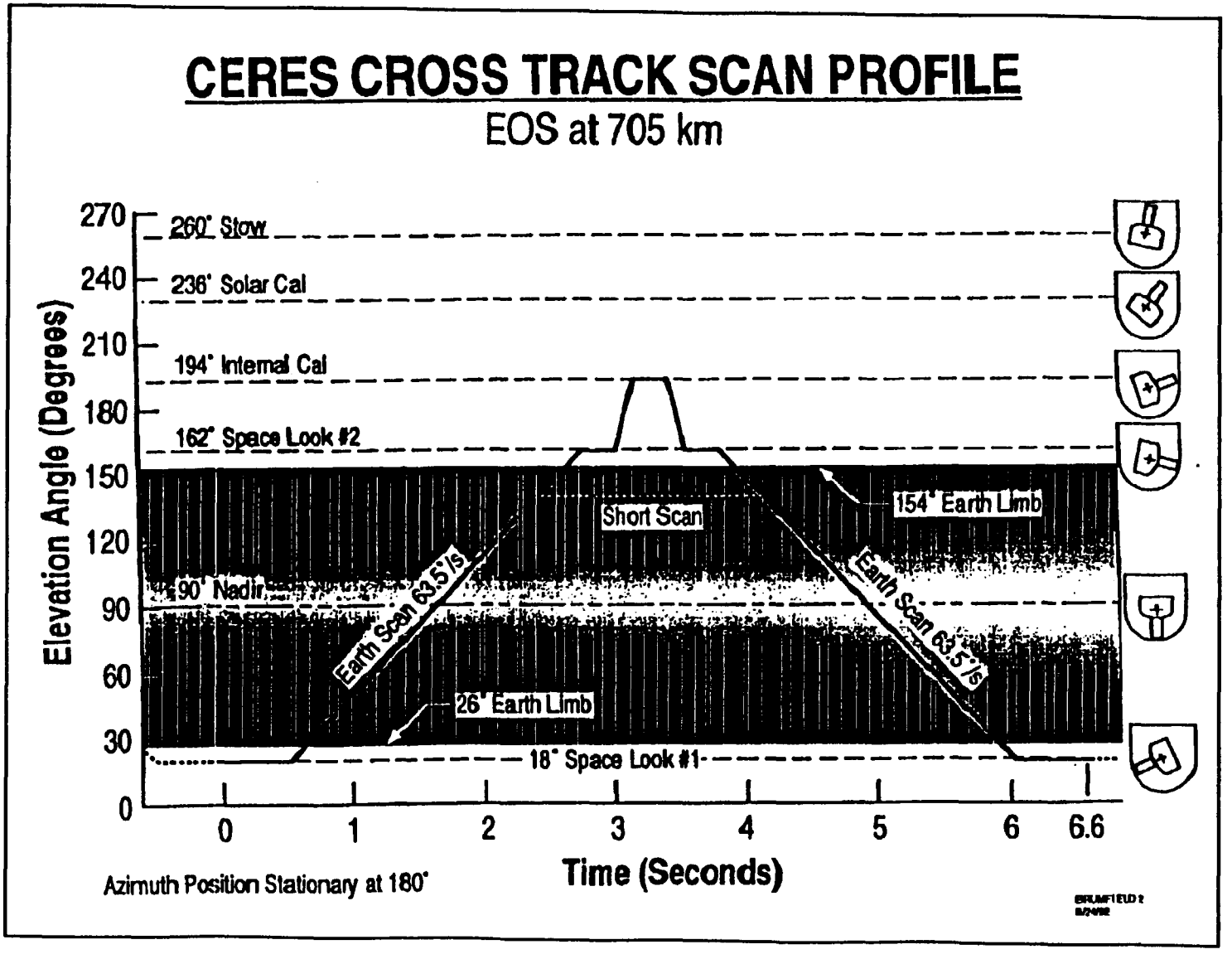

FIGURE 2 TYPICAL CROSS TRACK SCAN PROFILE (FIXED AZIMUTH MODE)

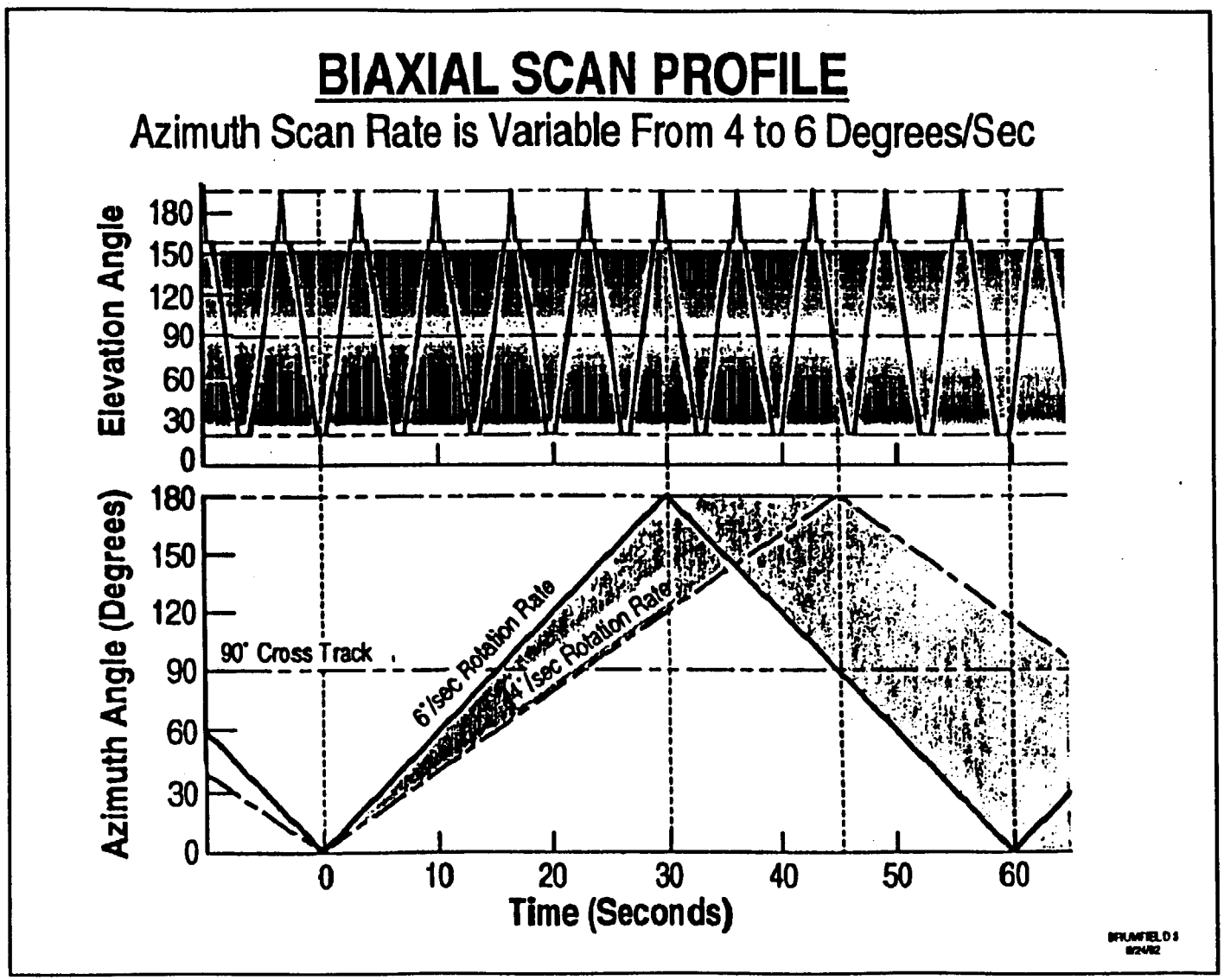

FIGURE 3 BIAXIAL SCAN PROFILE (BIAXIAL MODE)

Each CERES instrument will insert ancillary data into the science data packets it passes to the spacecraft. Total data rate for each instrument, including other instrument engineering data, will be approximately 8 kbps without packetization overhead or ancillary data. The combined data rate for both CERES instruments is approximately 18 kbps (9 kbps each), including ancillary data and packetization overhead (~ 60 Kbit packets assuming CCSDS packetization standards).

Each instrument uses relay drivers controlled by discrete commands from the spacecraft to turn instrument power on or off. There are no provisions for commands via the 1553 bus to turn the instrument on or off; it must be done by the spacecraft.

The science data stream includes science data, engineering data, and housekeeping data in packets that are nominally 56 Kb in length and transferred at approximately 9 kbps. Approximately 90 to 110 parameters are monitored. Preliminary packet structure depicted in Figure 4. Each instrument will have its individual set of APIDs. Details of packet transfer are defined in the Command and Data Handling (C&DH) Interface Control Document (ICD).

48 bits	Packet Header					
64 bits	Time Data					
8 bits	Quick-Look Flag					
<2,288 bits	Digital and Status Data					
52,800 bits	Elevation Position 16 bits	Azimuth Position 16 bits	Total Channel 12 bits	Longwave Channel 12 bits	Shortwave Channel 12 bits	Engineering Data 12 bits
512 bits	Ancillary Data					

Main data organized as 660 records, 10 bytes in length

FIGURE 4 SCIENCE DATA PACKET FORMAT

Each CERES instrument monitors approximately 90 to 110 parameters and outputs a housekeeping data rate of approximately 300 bits per second. This data is not packetized. Details of the Housekeeping data transfer are defined in the C&DH ICD.

Each CERES instrument incorporates two dedicated microprocessors: an Instrument Control Processor to control the instrument scanning operations and manage the interfaces to the spacecraft; and Data Acquisition Processor to manage the detector

sampling, digitizing, and data formatting and handling operations. Instrument operations are performed by execution of programs stored in instrument memory, requiring only control commands issued from the spacecraft to change modes, initiate calibration sequences, change configurations, perform diagnostics, or input times of orbital events such as sunrise or sunset.

a. Instrument Control Processor (ICP) – Details of the Instrument Control Processor functions are TBS. It is expected that the following functions will nominally be included in the ICP:

- Synchronize to 100 Hz sample clock
- Acquire Analog-to-Digital Converter
- Acquire Azimuth Position
- Azimuth Control
- Azimuth Brake Control
- Spacecraft Bus Safe Mode Monitor
- Process Control Control Commands from Spacecraft
- Acquire Data Acquisition Assembly Data (DAA)
- Send DAA Commands
- Packetize Instrument Data
- Reset Watchdog Timer
- Acquire Spacecraft Bus Time

b. Data Acquisition Processor (DAP) – Details of the Data Acquisition Processor functions are TBS. It is expected that the following functions will nominally be included in the DAP:

- Synchronize to 100 Hz sample clock
- Acquire Analog-to-Digital Converter Data
- Acquire Elevation Position
- Elevation Scan Control
- Perform Solar Avoidance
- Acquire Coarse Solar Angle
- Bridge Balance Control
- Temperature Control
- Shortwave Internal Calibration Source Control
- Cover Control
- Transfer DAA Data
- Process DAA Commands
- Reset Watchdog Timer

3.2 Instrument Operations

Each CERES instrument operates virtually continuously from the time that the spacecraft sends the discrete command to relay drivers to turn on instrument power. The Instrument Control Processor and Data Acquisition Processor boot up automatically, go through a series of self tests and internal configurations, and transition to a Safe Mode where the instrument will remain until a control command is issued from the ground. Each instrument will output the approximately 9 Kbps science data stream and approximately 0.3 Kbps housekeeping data stream continuously until power is turned off by spacecraft discrete command.

When an instrument reaches the Safe Mode after initialization, a control command will be issued from the ground to the spacecraft, and thence via the 1553 bus to the instrument to put it in the Standby Mode. From the Standby Mode, a control command from the spacecraft will put an instrument in the Fixed-Azimuth Operating Mode. This instrument will nominally continue in this mode indefinitely, except for periodic internal calibration sequences and Solar Calibration Modes that are initiated by control commands from the spacecraft. The second CERES instrument will be commanded to the Biaxial Operating Mode, and continue indefinitely in the mode, except for periodic internal calibration sequences and Solar Calibration Modes. In addition, this biaxially operating instrument must be commanded into a solar avoidance short scan profile twice per orbit at the time of a sunrise or sunset event.

Commands and solar event times necessary to implement CERES instrument operations must be loaded on a daily basis. CERES instruments operate essentially autonomously, requiring only a relatively small number of control commands from the spacecraft. Most commands will be time tagged for specific times, or relative to particular spacecraft/orbital events. There may by need for a very infrequent load of program code to microprocessor RAM, but this can be done during the nominal forward link contacts. All commands and solar event data will be loaded by the EOC during spacecraft contact periods, and according to preplanned orbital operations. In the event that a daily update of solar event data cannot be uplinked, the Biaxially scanning instrument will automatically default to a short scan profile to protect the sensors from exposure to direct solar energy. Figure 5 depicts a nominal CERES operational timeline over an approximate 24 hour period.

3.2.1 Operating Modes, States and Configurations

CERES instrument operating modes, along with data rates, are identified and summarized in Table I. Operational "modes" characterize the instrument and its capabilities at given times. Within a given mode, a CERES instrument may operate in different "configurations". For example, an instrument may operate in the "cross-track configuration" within the Fixed-Azimuth Mode. In addition, within a given mode or configuration, there may be different "states" of some categories of subsystems or components. For example, the Elevation Gimbal Assembly may be

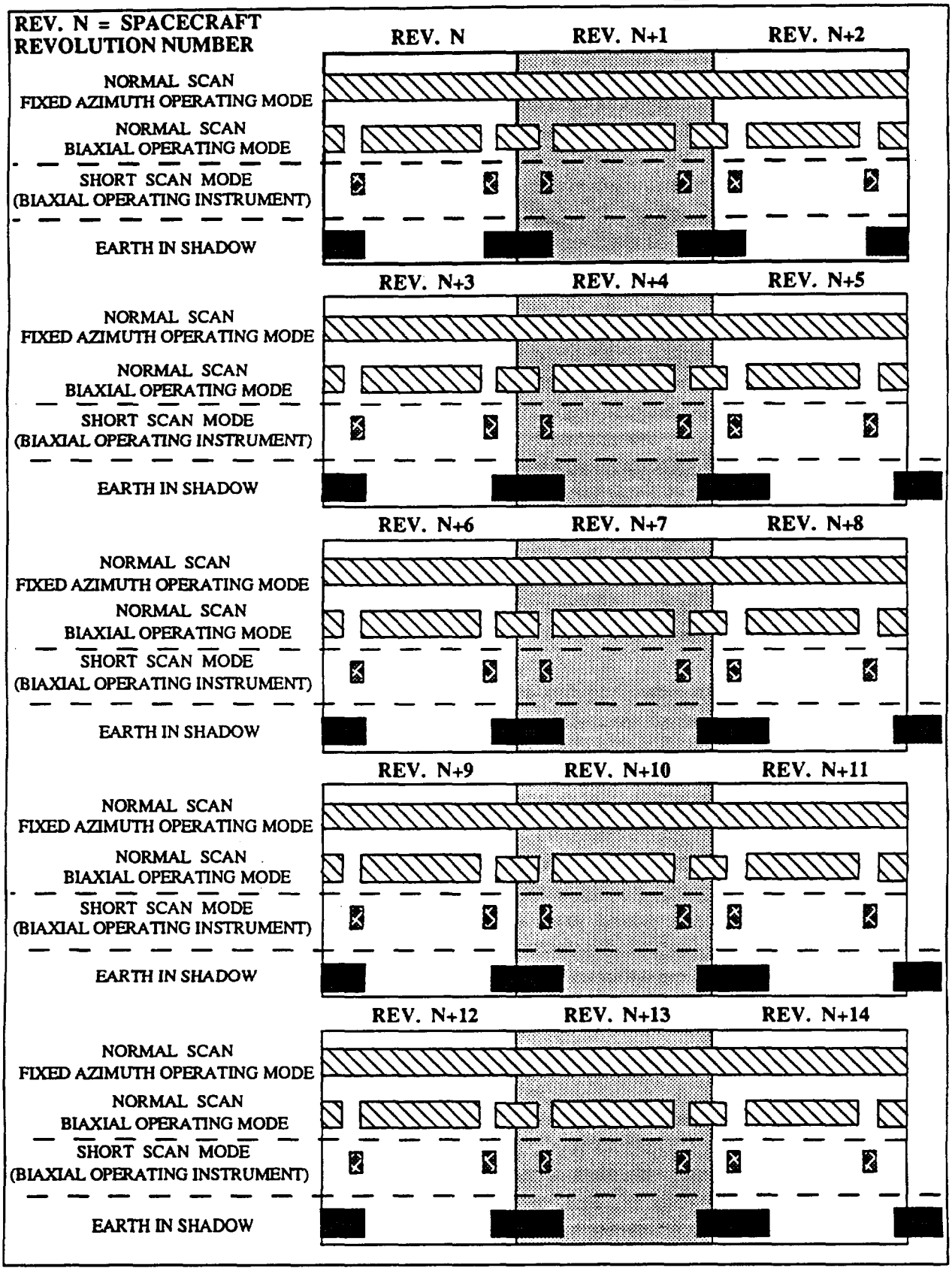

FIGURE 5 CERES NOMINAL OPERATIONAL TIMELINE

operated in the normal "Earth scan profile" state or the "short Earth scan profile" state; or the Shortwave Internal Calibration Sources can be in an "on" or "off" state when the instrument is in the Internal Calibration configuration of either the Fixed-Azimuth Operating Mode or the Biaxial Operating Mode. While some state change commands and some configuration command sequences will be stored in instrument RAM, almost all control commands required to change modes or initiate configuration command sequences will be stored in the Spacecraft Controls Computer (SCC) for time-tagged execution. There may be some small number of real time control commands issued from the EOC.

TABLE I CERES OPERATING MODES

OPERATING MODE (EACH INSTRUMENT)	DATA RATE		COMMENTS
	SCIENCE	HOUSE-KEEPING	
Fixed Azimuth Operating Mode	9 kbps	1 kbps	Scans back and forth across the Earth, pauses to view space on either side.
Biaxial Operating Mode	9 kbps	1 kbps	Adds an azimuth oscillation while simultaneously scanning in elevation.
Solar Calibration Mode	9 kbps	1 kbps	Expected to occur ~ once per 2 weeks.
Launch Mode	0	0	Power off
Survival (off) Mode	0	0	Operational power off. Survival power on.
Initialization Mode	9 kbps	1 kbps	Operational power on. Data buses active. (Goes to Safe Mode automatically)
Standby Mode	9 kbps	1 kbps	Telemetry active. Commands accepted. Operationally ready.
Safe Mode	9 kpbs	1 kpbs	Telemetry active. Requires real-time ground command to transition to Standby Mode or Diagnostic Mode
Diagnostic Mode	9 kpbs	1 kpbs	Memory loads or dumps accepted. Scan tables loads accepted. Internal command seq, loads accepted. Special diagnostic loads/actions accepted. (TBD) Goes toSafe Mode by command.

The following are brief descriptions of CERES instrument modes, and configurations:

a. **Fixed Azimuth Operating Mode** – In this mode, the azimuth gimbal is held fixed at a constant azimuth angle while the elevation gimbal starts from an 18° space look angle on one side of the Earth and scans across the Earth surface to space on the other side. After a brief pause to look at internal calibration sources, the instrument scans back across Earth to the 18° space cycle again. This basic scan cycle repeats every 6.6 seconds on a continuing basis except for periodic internal calibration and solar calibration sequences.

   Cross-Track Configuration – One of the configurations within the Fixed Azimuth Operating Mode is defined with the Azimuth Gimbal Assembly fixed at an angle which aligns the track of the field of view (FOV) footprint on the Earth's surface at approximately 90° with respect to the track of the sub satellite point on the Earth's surface while the Elevation Gimbal Assembly continues to operate in the basic scan profile described above. Hence the term "Cross-Track" Configuration.

   Internal Calibration – At approximately one to two week intervals, each CERES instrument will perform an internal calibration sequence. This is an instrument internally stored sequence that is performed during both the above described Fixed-Azimuth Operating Mode or the following described Biaxial Operating Mode. The instrument does not transition to a separate operating mode, but rather performs the Internal Calibration Sequence within the two normal modes mentioned. It does however, require a Spacecraft issued control command to initiate the internally stored sequence. During its normal scan modes, the instrument detectors view a blackbody calibration source and the Shortwave internal Calibration Source (SWICS). During the calibration sequence, the temperature of the blackbody source and the SWICS stored sequence.

b. **Biaxial Operating Mode** – In this mode, the Elevation Gimbal Assembly continues to perform the nominal elevation scan profile described above, while the Azimuth Gimbal Assembly scans through an azimuth angle profile (Hence the term "Biaxial"). The nominal (stored) profile starts from 0° (which is aligned with the +Y instrument axis) and scans through a 180° azimuth angle and back again. This azimuth scan rate can be varied from 4° per second to 6° per second by uplink command from the EOC, but the nominal (default) rate is 6°. The limits of the azimuth scan profile can also be changed by commands uplinked from the EOC.

   Short Earth Scan Profile – When a CERES instrument is operating in the Biaxial Mode, the sensors are likely to look directly at the sun when the sun is near the Earth limb, as will happen at every orbital sunrise and sunset. To

prevent the sensors looking at the full sun, the instrument can be placed in a "Short Earth Scan Profile" in which the elevation gimbal scan is stopped short of reaching the Earth limb during that range of azimuth gimbal angles that would cause the sensors to look directly at the sun if the nominal elevation scan motion were continued. Normally, solar event times and angles will be uplinked on a daily basis from the EOC, and the biaxially operating instrument will be commanded into the "short Earth Scan Profile" state using stored commands based on the solar event data. As a backup, solar presence sensors on each side of the instrument will sense the sun's presence before it enters the FOV of the sensors and triggers an internally stored command that will change the instrument to the "Short Earth Scan Profile" state automatically. In the event that solar event data cannot be uplinked at the planned daily spacecraft uplink contact, the biaxially operating instrument will default to the "Short Earth Scan Profile" state when it reaches the end of the last uplinked solar event table. Note that it is not necessary for an instrument operating in the nominal "Cross-Track" Configuration to be placed in the "Short Earth Scan Profile" state because a sunrise or sunset event does not occur at that azimuth angular position.

c. **Solar Calibration Mode** – Each CERES instrument will be commanded to this mode at approximately two week intervals by Spacecraft issued command. The instrument will perform an internally stored sequence of commands to position the detectors to an internal position so that they will see solar energy that has entered via a path through the Mirror Attenuator Mosaic (MAM). The MAM reduces the intensity to a level that will not damage the detectors, but will fall within their responsitivity range. The azimuth drive assembly will position the instrument so that the sun will move through the MAM field of view at either sunrise or sunset without having to track the sun. This solar calibration mode will require that updated solar position data be sent to the instrument from the EOC prior to being commanded to this mode. Output data rates will remain the same as for a scanning mode, but specific content of the data content will be changed to reflect the different mode of operation. The instrument can be commanded into the Solar Calibration Mode from the Fixed Azimuth Operation Mode, the Biaxial Operation Mode, or the Standby Mode. At the end of the stored sequences that are performed during the Solar Calibration Mode, the instrument automatically transitions to the Standby Mode without having to send a Spacecraft command. This protects the instrument against possibly scanning the full solar intensity in the event a command could not be issued to put it back into one of the normal scanning modes before another sunrise or sunset event.

d. **Launch Mode** – Both CERES instruments will be in a Launch Mode for Spacecraft launch and orbital insertion, and will have the following attributes while in this mode:

- All power off
- Azimuth Gimbal Assembly in detent position with brake caged
- Elevation Gimbal Assembly in stowed position
- Covers closed
- Survival heaters off
- Will transition to Survival Mode automatically when survival Spacecraft bus is turned on

e. **Survival Mode** – CERES instruments will be in the Survival Mode anytime Spacecraft Power is turned off and Spacecraft survival power is on. The instruments will have the following attributes when in the Survival Mode:

- Operational Power off; survival power on
- Covers will be open or closed (depending on the mode the instrument was in prior to transition to Survival Mode)
- Elevation Gimbal Assembly in stowed position
- Azimuth Gimbal Assembly in either the detent position with brake caged, or arbitrary position with brake applied (depends on mode from which the instrument entered the Survival Mode)
- Instrument will automatically transition to the Initialization Mode when the Spacecraft turns instrument operating power on

NOTE: *The CERES instruments will initiate an internal stow sequence and enter the Survival Mode at anytime the instrument receives any of the predefined indicators from the Spacecraft that the Spacecraft is about to enter either Spacecraft Survival Mode or Spacecraft Safe Mode.*

f. **Initialization Mode** – When the Spacecraft turns CERES instrument power on, the instrument automatically transitions to an Initialization Mode and runs an internally stored initialization and checkout sequence. The instruments have the following attributes when going through the Initialization Mode:

- Operational power is on
- Data buses are active
- Internally stored diagnostic and setup sequences run automatically
- Elevation drive in stowed position
- Azimuth Gimbal assembly in whatever state was present when instrument was in Survival Mode
- Automatically transitions to Safe Mode when checkout and initialization sequences are completed

g. **Safe Mode** – When the instrument is first powered up by Spacecraft discrete command, checkout and initialization sequences are run, the instrument automatically transitions to a Safe Mode. It will remain in this Safe Mode

until a real-time ground command is received to command it to either the Standby Mode or the Diagnostic Mode. An instrument can also enter Safe Mode from any of the normal operating modes in response to a Spacecraft issued command, an internal command generated in response to an anomaly, or loss of the discrete "Im OK" signal from the Spacecraft Controls Computer. CERES will transition from the Safe Mode back to Survival Mode when the Spacecraft turns instrument power off via a Spacecraft discrete command. In the event of an unannounced loss of the main instrument power buses, the CERES instruments will transition to the Survival Mode directly without going through the Safe Mode, but there is no assurance that the instrument will be in a configuration that will prevent possible damage to detectors from accidental exposure to full intensity solar radiation. When the Spacecraft must make an emergency, but announced, shutdown of instrument power buses, CERES can transition to Safe Mode in less that 5 seconds so that power can be removed and transition made to Survival Mode that assures protection of the instrument against detector damage from full-intensity, direct, solar energy. CERES will have the following attributes when in the Safe Mode:

- Science and Housekeeping data outputs continue at normal rates
- Elevation Gimbal in stow position
- Azimuth Gimbal Assembly will be caged if entering Safe Mode for the first time after initial post-launch power up, or stopped with brake applied when entering Safe Mode from another operating mode.
- Azimuth angle will be at the launch position when entering Safe Mode after first power up, or random depending on the operating mode from which the instrument entered Safe Mode.
- Can be commanded to Standby Mode or to Diagnostic Mode only by real-time ground command.
- Can transition to Survival Mode by Spacecraft discrete command to turn off instrument main power.
- Covers will be open or closed depending on transition to Safe Mode.

NOTE: ***Present plans call for covers to be left in open position once they have been opened during the post-launch initialization and set up period. CERES covers will not be closed unless an anomaly occurs which makes it prudent to add additional protection for the instrument. At the present time, Spacecraft transitions to Delta-V Mode, Safe Mode and Survival Mode are not considered such an anomaly.***

h. **Standby Mode** – CERES instruments can transition to Standby Mode from Safe Mode only by real-time ground command. Transition from normal scanning modes is achieved via Spacecraft issued command. Transition from the Solar Calibration Mode is automatically initiated at completion of the stored sequences performed during the calibration activity. CERES must be in Standby Mode when covers are opened for the first time. The following attributes are included while instruments are in Standby Mode:

- Science and housekeeping data streams are active at the nominal rates
- Instrument operationally ready for most control commands
- Covers are nominally open (after being opened for the first time)
- Azimuth Gimbal position is arbitrary, but stationary
- Elevation Gimbal in stow position
- Transitions to Fixed-Azimuth Operating Mode, Biaxial Operating Mode, Solar Calibration Mode, or Safe Mode by ground command

i. **Diagnostic Mode** – CERES instruments can only enter Diagnostic Mode from Safe Mode, and only in response to a Spacecraft or Ground command. An instrument must be in this mode to run certain diagnostic or troubleshooting sequences to support anomaly evaluations. Memory dumps or software up-loads to CPU RAM must be done with the instrument in this mode. The following attributes are included when CERES is in the Diagnostic Mode:

- Science and housekeeping data rates continue at nominal rates, but specific content of science packets may be changed
- Memory dump or RAM load commands are accepted
- Scan table loads are accepted
- Special diagnostic loads or actions are accepted
- Elevation Gimbal may be stowed or operated for diagnostics
- Azimuth Gimbal may be stopped or operated for diagnostics
- Brake may be applied or off
- Transitions to Safe Mode by command

3.2.2 Microprocessor Operation

Each CERES instrument uses two microprocessors in its operation. An Instrument Control Processor (ICP) controls the instrument scanning operations and manages the interfaces to the Spacecraft. A Data Acquisition Processor (DAP) manages detector sampling, digitizing of data, data formatting, and data handling operations. (More processor description is provided in section 3.1.) Both microprocessors must operate in a continuous and interactive manner. A watchdog timer is used as an operational check between the two; if for any reason one processor fails to respond to the watchdog timeout, the other processor will command the instrument to the Safe Mode to secure the instrument until troubleshooting can be done.

Flight operations software is stored in CPU accessible ROM, including all internal sequences required to perform all instrument operations. During flight operations, the microprocessors may require occasional dumping to verify proper operations or to troubleshoot an anomaly. When a CERES instrument is powered up by the Spacecraft, part of the checkout and initialization process is to load instrument operational software from ROM to RAM. There is a core operating system for each processor that must boot up and load in RAM in order for the instrument to operate. If an anomaly occurs within software that does the nominal

operations, data acquisition, housekeeping, and spacecraft interface functions, the instrument is designed to allow upload of this software directly to RAM while the instrument is in the Diagnostic Mode. The instrument would continue to use that RAM resident software until it is powered off by the spacecraft, or another software upload is done. If the instrument is powered off by the spacecraft and then back on, it will boot up and initialize using the ROM resident software. Any software patches that have been made prior to the power down/power up will have to be uploaded again.

Flight software will be burned into ROM chips and and installed in the instrument prior to delivery to Martin Marietta for Spacecraft level integration and test (I&T). If changes to stored sequences are required to facilitate I&T procedures or tests, these changes will be loaded into RAM in the same manner that changes would be loaded during orbital operations. It is the intention of the CERES developer that CERES instruments be launched with all flight software sequences stored in instrument internal ROM, so that no software loads will be required during the launch operations or the initial orbital configuration process.

Microprocessor uploads will he done via the Spacecraft Command and Data Handling subsystem and the 1553 bus. Upload procedures and information is TBS.

Microprocessor dumps will be done via the usual packetized, 1553 science data stream. Dump procedures and information is TBS.

3.2.3 Instrument Commands

CERES instruments operate primarily from internally stored sequences. Most Spacecraft issued commands are control commands that initiate internally stored sequences that will change and/or implement instrument operational modes, set up specific configurations or states, perform internal calibration sequences, and perform certain instrument diagnostics. Most SCC commands to CERES instruments will be uploaded on a daily basis and stored in the SCC to be issued as time-tagged commands. The CERES instruments do not have the capability to store commands internally for later execution. The CERES instruments execute all commands from the SCC as soon as they are issued.

Commands to place the biaxially scanning instrument into Short Earth Scan Profile at the time of sunrise and sunset events are normally issued as time-tagged (or scheduled), stored commands. However, these commands also require uplink of times and angular positions of sunrise and sunset events on a daily basis. There is built in internal checks for the currency of this data. In addition, as a backup safety feature, solar presence sensors, one on either side of each instrument, will detect the sun's presence and trigger an internally stored sequence that will implement the Short Earth Scan Profile.

Real time commanding is not planned as a routine operation. However, instrument critical, contingency, or emergency operations may require occasional real time commanding. Troubleshooting anomalies would probably be initiated via a real time command. As presently designed, it is planned that CERES could be commanded out of the Safe Mode only by real time command from the ground.

3.2.4 Instrument Telemetry

Specific CERES instrument telemetry processing requirements are defined in Appendix III.

3.2.4.1 Science Data

Specific CERES instrument science data processing requirements are defined in Appendix III.

3.2.4.2 Engineering Data

Specific CERES instrument engineering data processing requirements are defined in Appendix III.

3.2.4.3 Housekeeping Data

CERES instrument housekeeping data will be used by the Flight Operations Team for the following applications:

a. Monitor health, safety, and performance of the instruments
b. Verify execution of critical commands
c. Observe responses to commands or input data

Specific CERES instrument housekeeping data processing requirements are defined in Appendix III.

3.2.5 Bus Data Unit

CERES instruments will not have a dedicated BDU, but will have discrete interface points from a shared BDU as follows:

TYPE	CERES FORE	CERES AFT
Relay Drives	9	9
Bi-Level	4	4
Passive Analog	8	8

3.2.6 Operating Constraints

A constraint is a limitation on the operation of the Spacecraft Bus and instruments in order to protect or prevent compromise of mission goals.

3.2.6.1 Categories of Constraint/Restraints

Constraints have been defined into the following six categories based upon the implications of violating those constraints:

a. **Mission Critical (MC)** - Those constraints which prevent permanent loss of a system, subsystem, or a component which would cause the termination of the mission. The damage to the hardware can be due to anything from a one time event to improper usage over an extended period of time.

b. **Hardware Critical (HC)** - Those constraints which prevent permanent loss of Spacecraft hardware from which recovery to full Spacecraft operational state *can not* be made. The damage to the hardware can be due to anything from a one time event to improper usage over an extended period of time. (e.g. Loss of either CERES instrument would fall into this category.)

c. **Configuration Critical (CC)** - Those constraints which prevent the loss of Spacecraft hardware from which recovery to full Spacecraft operational state *can be* made by switching to redundant hardware.

d. **Data Critical (DC)** - Those constraints which prevent permanent loss or corruption of a particular set of data, either command or telemetry.

e. **Temporary Data Loss (TL)** - Loss or corruption of data, either command or telemetry, that can be regained.

f. **Operational Restriction (OR)** - Guidelines for procedures when a number of possible operational options exist or information relevant to the proper operation of the Spacecraft.

3.2.6.2 CERES Operating Constraints

a. Initial activation of CERES instruments shall be performed during real-time contacts with the Spacecraft.

b. CERES instrument contamination covers shall not be opened until TBD days after spacecraft orbit insertion.

c. Instrument survival power shall be turned on within TBD (hours or days) after Spacecraft orbit insertion.

d. The Spacecraft shall provide each CERES instrument a 5 second advance warning of control power down of main instrument power buses.

e. Only a real-time ground command will be used to command a CERES instrument out of the Safe Mode.

f. Only one CERES instrument will be commanded to the Biaxial Operating Mode at a time; however either instrument can be the biaxially scanning instrument since both are deigned with identical capabilities.

3.2.7 Instrument Activation

Both CERES instruments will be powered off during launch. Survival power will be turned on by the Spacecraft within TBD (hours or days) of Spacecraft orbit activation. Each CERES instrument, CERES FORE and CERES AFT, will have its own unique command designators and completely independent telemetry outputs.

The CERES instruments, CERES FORE and CERES AFT, will be powered up and checked out independently during the Spacecraft Operational Initialization Mission Phase. When powered up by Spacecraft discrete command, each CERES instrument will go through an automatic, internally stored, checkout and initialization procedure. When this internal initialization procedure is complete, the instrument will automatically transition to the Safe Mode where it will hold until a real time ground command is received to command it to either the Diagnostic Mode or the Standby Mode. Under nominal conditions, the instrument will be commanded to the Standby Mode where it can be configured for cover opening.

Procedure for cover check-out and opening is TBS.

Once an instruments covers have been opened and temperatures allowed to stabilize, the instrument can be configured and commanded to a normal operating mode, where it will operate continuously until commanded to a different mode. Detailed procedures and commands for the initial operational modes are TBS.

4 OPERATIONAL SYSTEM DEFINITION

The understandings regarding operation of the EOS-AM Spacecraft and ground system, as each relates to instrument operation, are as follows:

4.1 Spacecraft Bus

The EOS-AM Spacecraft Bus provides the platform for science instrument observations, and provides the environment and services necessary to sustain instrument operability.

The EOS-AM Spacecraft mission can be described by seven mission phases. Each mission phase represents a predefined period during which a set of interrelated operations and activities are performed. The primary activities associated with these mission phases are:

a. Prelaunch -- Launch readiness of the Spacecraft, launch vehicle, and associated ground elements is established and verified.

b. Launch / Ascent -- The launch vehicle places the Spacecraft in the injection orbit and the Spacecraft senses separation from the launch vehicle.

c. Orbit Acquisition Initialization -- A positive Spacecraft energy balance and a S-Band communications link is established. A stable earth-oriented attitude is attained.

d. Orbit Acquisition -- The Spacecraft performs the maneuvers necessary to achieve operational orbit. These maneuvers are designed by the cognizant operations elements and initiated by ground command under Flight Operations Team control.

e. Operational Initialization -- The Spacecraft operational orbit is acquired. A complete housekeeping and instrument equipment checkout is performed by the Flight Operations Team with technical direction from the Spacecraft Bus contractor and the instrument PIs or delegates. A fully operational Spacecraft state is established.

f. Operational -- The Flight Operations Team is responsible for conducting Spacecraft operations. Proper Spacecraft orbit is maintained and full resources to the instruments are provided during the science mode.

g. End of Mission -- Upon decision to end the Spacecraft mission, the Spacecraft is placed in a dormant state and permitted to experience a normal orbit decay to re-entry into the Earth's atmosphere.

Figure 6 depicts a top-level flow of the EOS-AM Spacecraft mission phases.

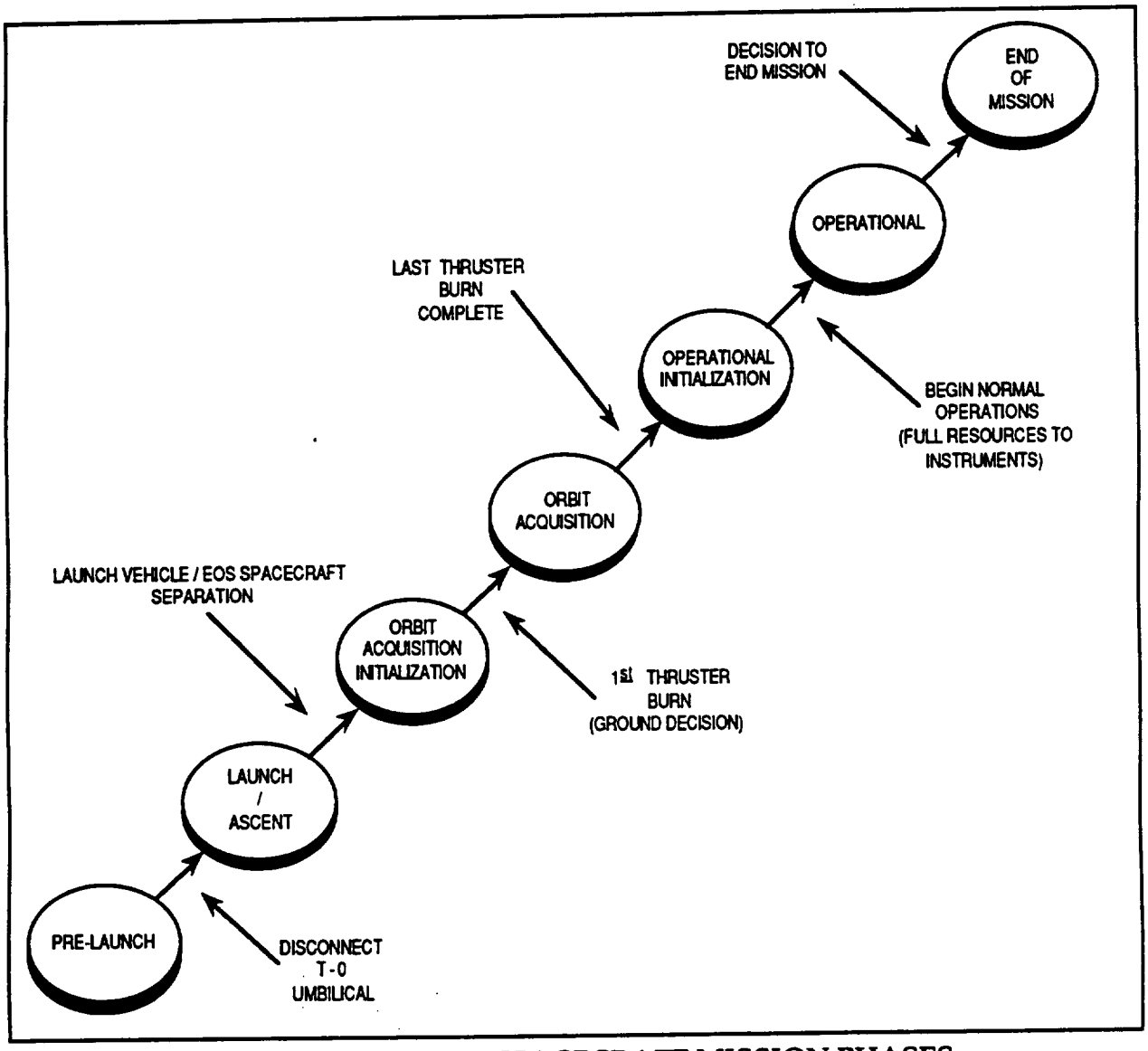

FIGURE 6 EOS-AM SPACECRAFT MISSION PHASES

4.1.1 Command and Telemetry Systems

The Spacecraft Bus command system provides the primary means of controlling the Spacecraft and instrument operations while in orbit. The Spacecraft Bus telemetry system provides the means for monitoring Spacecraft status, health and safety, and for acquiring/storing and retrieving EOS-AM science data. Command and telemetry systems hardware also generates and distributes timing signals, and produces the relative time code which appears within the telemetry format.

During normal operations, 150 Mbps science playback data (when commanded) and 16 kbps real-time housekeeping telemetry data is transmitted throughout each Spacecraft/TDRSS contact. 10 kbps command capability is available to handle uplink transmissions. The other Spacecraft Bus command and telemetry link capabilities are shown in Figure 7 (Uplink Paths) and Figure 8 (Downlink Paths). Commands may be preloaded into the SCC and issued by the stored command capability at designated times. Repetitive sequences of commands may be stored within the SCC and activated by an initiate command to reduce command transmission and storage volume.

SERVICE	SPACECRAFT ANTENNA	DATA RATE	REMARKS
SSA	HIGH GAIN	10 Kbps	NORMAL COMMAND OPERATIONS HIGH-RATE COMMANDS
SMA	HIGH GAIN	1 Kbps	LOW-RATE COMMANDS
SSA	OMNI	125 Bps	CONTINGENCY VERY LOW-RATE COMMANDS
DSN/GN/WOTS	OMNI	2 Kbps	EMERGENCY

LEGEND

SSA = S-BAND SINGLE ACCESS
SMA = S-BAND MULTIPLE ACCESS

DSN = DEEP SPACE NETWORK
GN = GROUND NETWORK
WOTS = WALLOPS ORBITAL TRACKING STATION

FIGURE 7 UPLINK PATHS

SERVICE	TYPE	DATA RATES I	Q	ANTENNA	CONTENT	USE
KSA	Play Back or Real Time	75 Mbps	75 Mbps	High Gain	Science Data	Science Mission Processing
SSA	Play Back		256 Kbps	High Gain	Health & Safety Housekeeping Data SCC Dump Data	As required for Anomaly follow up
	Real Time	16 Kbps	16 Kbps			Routine Operation
			1 Kbps	OMNI	Critical Health & Safety SCC Dump Data	Operation without High Gain Antenna
			1 Kbps			
SMA	Real Time		16 Kbps	High Gain	Housekeeping Data Diagnostic	Operation without SSA
DSN GN WOTS	Real Time	16 Kbps	16 Kbps	OMNI	Housekeeping Data Diagnostic	Operation without TDRSS
	Play Back		512 Kbps			Emergency Operations
DB	Real Time	12.5 Mbps	12.5 Mbps	Direct Access System	Real-Time Science Data	MODIS Real-Time Data
DB/DDL		12.5 Mbps	105 Mbps			MODIS (I), ASTER (Q) Real-Time Data
DP	Play Back	75 Mbps	75 Mbps	Direct Access System	Playback Science Data	Instrument Playback Data
DB	Real Time	12.5 Mbps		Direct Access System	Real-Time Science Data	MODIS Real-Time Data
DP	Play Back		105 Mbps		Playback Science Data	Instrument Playback Data

LEGEND

DB = Direct Broadcast
DDL = Direct Downlink
DP = Direct Playback
DSN = Deep Space Network
GN = Ground Network
WOTS = Wallops Orbital Tracking Station

KSA = K-band single access
SSA = S-band single access
SMA = S-band multiple access
TDRSS = Tracking and Data Relay Satellite System

FIGURE 8 DOWNLINK PATHS

The Direct Access System (DAS) provides for direct-to-user downlink of science data via the X-band transmission system which is independent of the High Gain Antenna (HGA). A summary of Spacecraft downlink services, including the DAS, is shown in Figure 8 (Downlink Paths).

Normal operation will be to configure the DAS for continuous operation in the Direct Broadcast (DB) mode, providing uninterrupted output of real-time MODIS science data along the orbital path. When scheduled by the EOC, the DAS Direct Broadcast/Direct Downlink (DB/DDL) mode will provide direct-to-user ASTER science data on the X-Band Q channel, in addition to the MODIS data on the X-Band I channel.

The DAS Direct Playback (DP) mode is considered an emergency mode and will be used only in the event the Solid State Recorder (SSR) science data cannot be played back through the HGA.

The EOC scheduling function will coordinate DAS operations with the user ground stations. The Spacecraft DAS services will be managed via the SCC stored command and Relative Time Command Sequence (RTCS) capability.

4.1.2 Spacecraft Controls Computer

The Spacecraft Controls Computer (SCC) provides the hardware, software and firmware support for control of on-board operational processes.

Specific requirements for interaction between SCC functions and instrument operation are defined in Appendix I.

4.1.2.1 Spacecraft Controls Computer Description

There are redundant SCCs, each of which hosts the firmware to provide SCC initialization functions. Both SCCs can be simultaneously powered and host the full software load but only one SCC can be active at any time. Once loaded, the active SCC software provides a real-time Operating System and supports the execution of application software for the Spacecraft subsystems and instruments. The SCC provides a number of application software services to maintain Spacecraft and instrument operability.

a. The SCC Operating System/Executive is a standardized operating system which supports the execution of the SCC applications software and manages the SCC resources (I/O, scheduling, memory management, timing).

b. The Command, Telemetry and Control (CT&C) application interfaces with all SCC-resident software and provides the following services:

1. Validation and distribution of ground commands for SCC applications software execution.

2. Performs system level Fault Detection, Isolation and Recovery (FDIR). The FDIR software resides in the SCC applications programs and in the Telemetry Monitor (TMON).

3. Storage and processing of Absolute Time Commands (ATC) and Relative Time Command Sequences (RTCS).

4. Sequencing control of SCC-issued subsystem and instrument commands (Absolute-time stored commands, Relative-time stored commands, closed-loop control commands and FDIR commands).

5. Performs Spacecraft Time management, and provides for generation and distribution of the SCC Time of Day (TOD) information to the instruments.

6. Collects SCC telemetry for inclusion in the downlinked telemetry stream.

7. Collects, formats and distributes Ancillary data to the instruments via the Command & Telemetry Bus.

c. The Attitude Determination and Control (ADAC) application software provides software to acquire and maintain Spacecraft attitude within the accuracy limits necessary for instrument operation. The ADAC application provides control of the Solar Array Drive and High Gain Antenna via closed-loop control and FDIR commands.

d. The Navigation (NAV) software performs Spacecraft orbit determination and control. NAV provides position and vector information to the ADAC. NAV also provides telemetry data, Doppler compensation information, closed-loop control and FDIR commands.

e. The Thermal Monitor and Control Software (TMCS) provides autonomous control of the active Spacecraft thermal control elements [Heater Controller Electronics (HCEs) and Capillary Pump Heat Transport System (CPHTS)] to maintain the Spacecraft bus and instrument temperatures within allowable operational limits. The TMCS provides telemetry data, closed-loop control and FDIR commands.

f. The Power Monitor and Control Software (PMCS) provides autonomous control of the Electrical Power System (EPS), including battery charge control and automatic load shedding. The PMCS provides telemetry data, closed-loop control commands and FDIR commands.

The Telemetry Monitor (TMON) will be used to monitor critical Spacecraft bus and instrument telemetry. TMON provides the on-board capability to monitor spacecraft housekeeping data and SCC memory and to initiate autonomous action when predefined anomalous conditions occur. TMON has the capability to mask out telemetry information, perform logical operations on the telemetry information and compare the results to predefined values. If specific anomalous conditions occur, TMON will trigger predetermined actions which may be 1) no action, 2) issue a spacecraft command, or 3) issue a command to activate a Relative Time Command Sequence (RTCS). When a TMON action is triggered, a message will be inserted in the spacecraft activity log which will specifically define the action taken. TMON is table-driven via the telemetry monitor tables, which are ground-controllable. Each TMON function may be individually enabled or disabled by ground command. Each TMON function may also be inhibited from issuing its predetermined commands, while still being allowed to perform its comparison check and notify the activity log if an anomalous condition is detected.

The Fault Detection, Isolation and Recovery (FDIR) system is designed to autonomously reconfigure the Spacecraft in response to predefined survival-critical hardware or software failures. The intent of the FDIR is to minimize autonomous switching, while protecting the Spacecraft Bus and instruments and providing those services required for survival. Anomalies which are not time critical will be resolved by ground intervention rather than FDIR action. Most of the FDIR software resides in the SCC application software programs. FDIR utilizes the TMON software to perform simple, table-driven FDIR functions.

The FDIR system monitors the state of various Spacecraft hardware and software functions, determines fault occurrence and generates fault recovery commands to the Spacecraft. When necessary, the FDIR controls the Spacecraft entry into Safe Mode and Survival Mode. Since the SCC may not be functional during these

modes, some FDIR functions are distributed in hardware throughout the Spacecraft. If the SCC is non-functional, stored command and RTCS operation will also be interrupted. Safe Mode and Survival Mode recovery will be accomplished only by ground command.

4.1.2.2 Spacecraft Controls Computer Operation

During normal flight operations a SCC stored command table memory load will be performed once per day with the list of Absolute Time Commands (ATC) and associated time tags necessary to perform Spacecraft operations for the next 24 hours. Figure 9 shows the stored command structure.

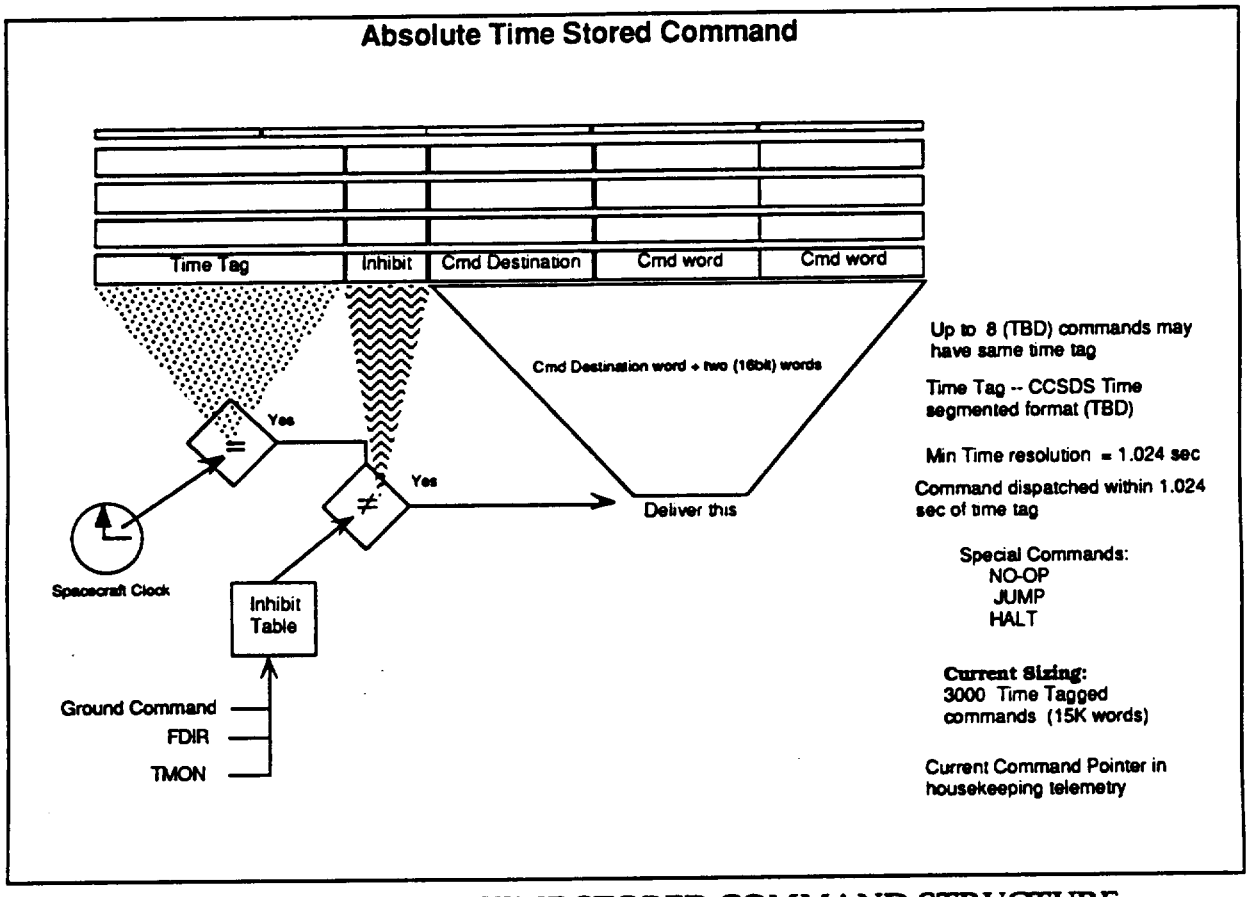

FIGURE 9 ABSOLUTE TIME STORED COMMAND STRUCTURE

The SCC will distribute each stored command to the appropriate spacecraft or instrument subsystem when the time tag matches the Spacecraft time. The command time tag resolution is 1.024 seconds. The SCC has the capability to accept, store and distribute up to 3000 stored commands. Each stored command has an associated inhibit identifier by which the SCC identifies the functional group to which the command belongs. All commands in a functional command group (as determined by the SCC inhibit table) may be inhibited from execution by either ground command or FDIR/TMON generated command. Figure 10 depicts stored command operation. Stored command loads will be planned to occur at least 6 hours prior to the end of the last stored command load, so there may be up to 30 hours of Spacecraft commands in the stored command table at that time. Specific stored-command requirements for instrument operation are defined in Appendix I.

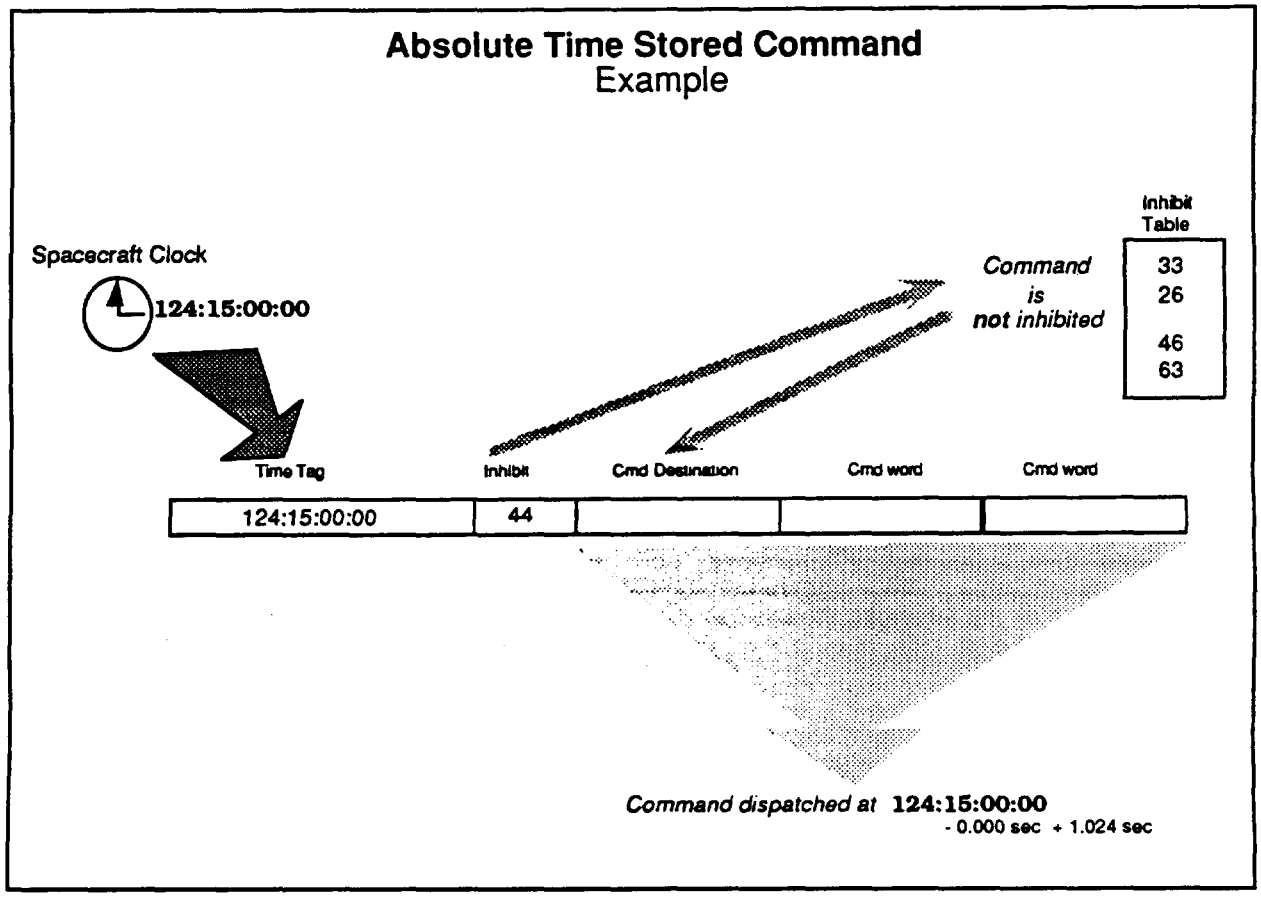

FIGURE 10 ABSOLUTE TIME STORED COMMAND OPERATION

During flight operations, groups of commands known as Relative Time Command Sequences (RTCSs) will be used to provide at least 128 SCC-resident predefined command sequences. Each RTCS has an associated RTCS sequence number, an inhibit ID, and up to 16 Relative Time Commands with associated relative time tags. Figure 11 illustrates the RTCS structure. RTCSs may be executed by ground command, stored command, SCC (FDIR/TMON) generated command or by another Relative Time Command. The relative time tag associated with each command defines the time delay relative to the previously dispatched command. Relative time tags have a resolution of 1.024 seconds. Each RTCS will have an associated inhibit identifier by which the RTCS may be inhibited from execution by ground command or FDIR/TMON generated command. No inhibit identifier will be provided for individual commands within the RTCS. Multiple RTCSs may be active at the same time.

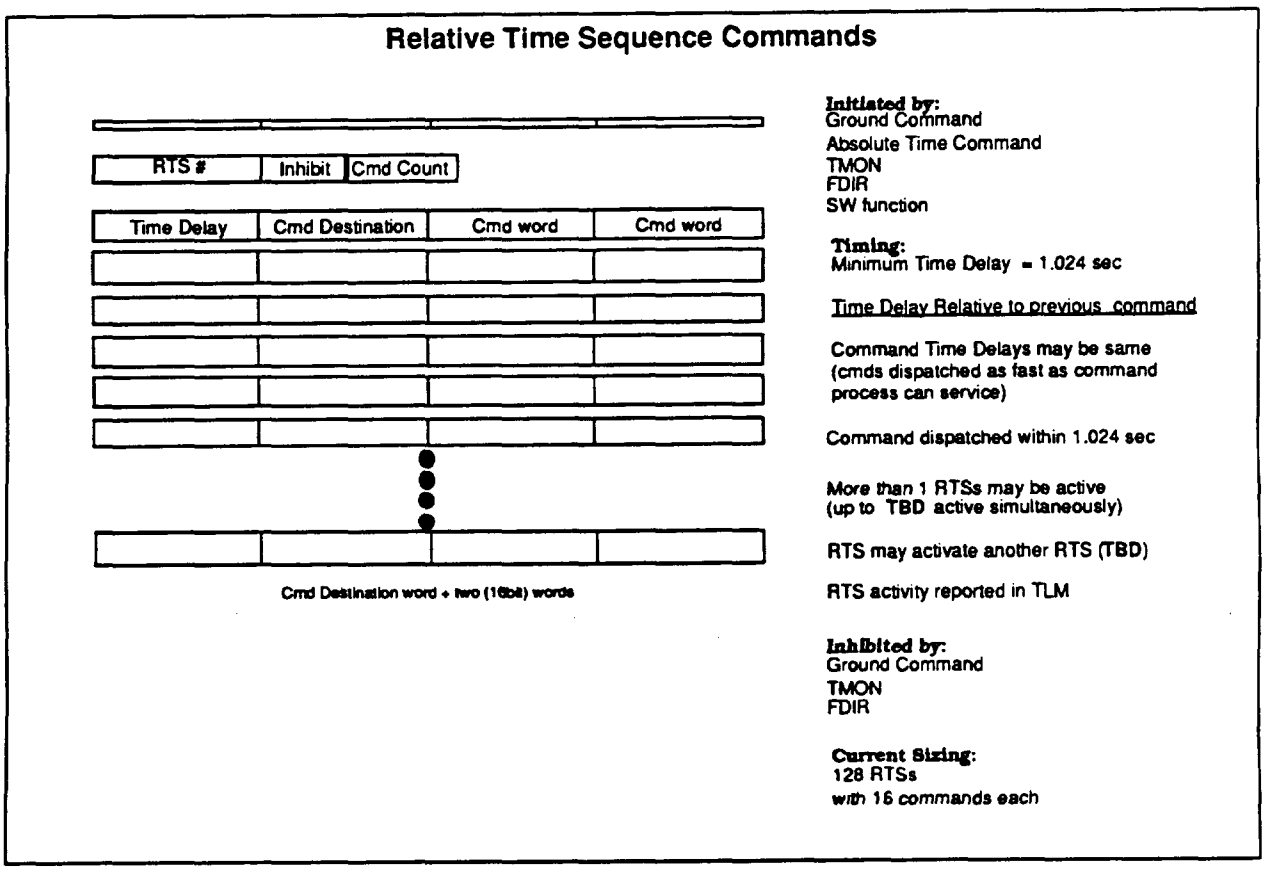

FIGURE 11 RELATIVE TIME COMMAND SEQUENCE STRUCTURE

RTCSs will be loaded into the SCC via ground command and will remain in the SCC memory until removed or over written by ground command. They do not require reloading on a regular basis. RTCSs will be used to perform repetitive functions on-board the Spacecraft (thus reducing the number of stored commands required), and as a command resource for the TMON/FDIR software.

Specialized RTCSs may be loaded, particularly during the Launch through Operational Initialization Mission Phases, for such time-critical operations as solar array release and deployment in order to minimize the need for ground control. These RTCSs will be deleted and/or replaced for normal operations.

Figure 12 depicts RTCS operation.

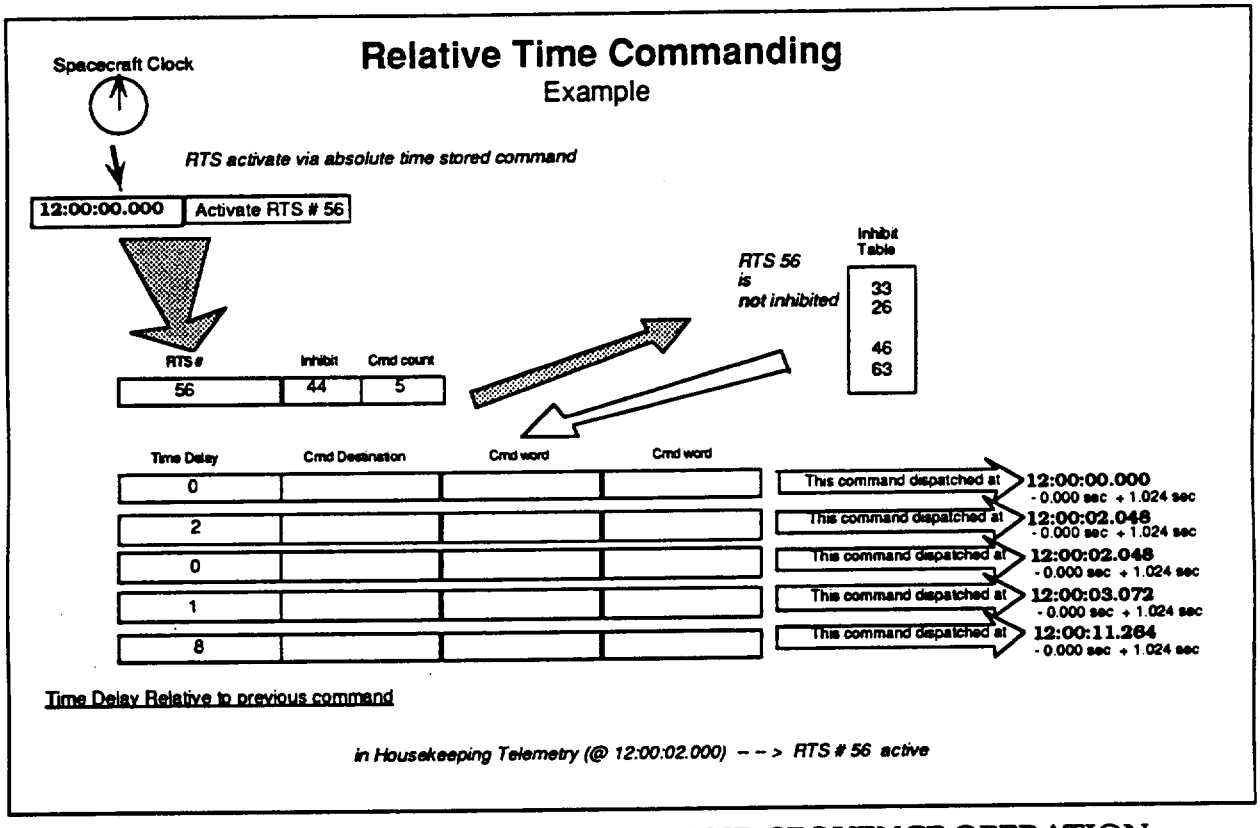

FIGURE 12 RELATIVE TIME COMMAND SEQUENCE OPERATION

4.1.3 Command and Telemetry Interface Unit

The Command and Telemetry Interface Unit (CTIU) is a central component for command and telemetry processing. The CTIU provides the processing and routing of command and telemetry data between the ground system, the Spacecraft Controls Computer and the Spacecraft instruments and housekeeping systems. The CTIU provides the following spacecraft services:

a. Uplink command decoding, processing, and distribution within the spacecraft.

b. Collection and formatting of spacecraft housekeeping and ancillary data in preparation for mass storage or immediate downlink.

c. Spacecraft command, telemetry and closed-loop interfaces to the Spacecraft Controls Computer (SCC).

d. Maintenance and distribution of Spacecraft Time and reference frequencies within the spacecraft including the coordination of Spacecraft Time with ground timing and ranging systems.

There are two redundant CTIUs, only one of which is active at any time and which acts as the Command and Telemetry (C&T) bus controller. The other CTIU is a 'hot standby' and acts as a Remote Terminal (RT). Both CTIUs are always powered when the Spacecraft is powered. Both the active and standby CTIUs can receive and execute uplinked CTIU-specific commands.

The active CTIU receives commands and command data from the ground via the S-Band Transponder, in addition to FDIR commands , closed-loop commands, and Absolute-time and Relative- time stored commands from the Spacecraft Controls Computer. CTIU-specific commands are executed immediately, while SCC-specific commands and command data (SCC table, software or stored command loads) are transferred to the SCC via the CTIU-to-SCC serial interface. The CTIU processes and distributes all other command data (Spacecraft or instrument commands and microprocessor loads) to the appropriate subsystem or instrument via the C&T bus. Since the SCC may be inoperative when the Spacecraft is in safe mode, only the CTIU processes real-time ground commands. Figure 13 illustrates the CTIU command processing flow.

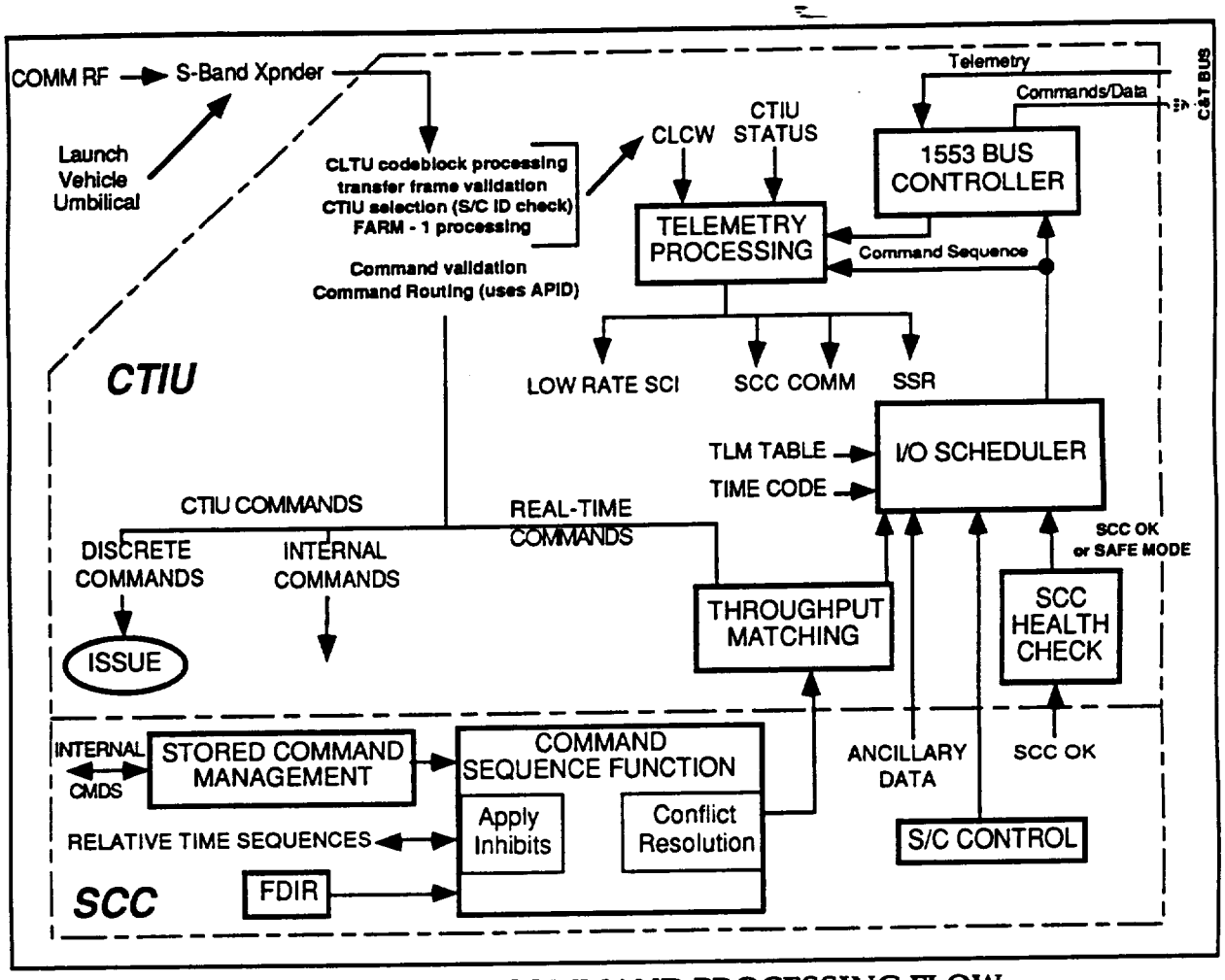

FIGURE 13 CTIU COMMAND PROCESSING FLOW

The CTIU receives Spacecraft subsystem and instrument telemetry via the C&T bus and the Bus Data Units (BDU). The CTIU formats the telemetry data for output to the Solid State Recorder (SSR) and/or the S-Band Transponder. Figure 14 shows the CTIU telemetry processing flow.

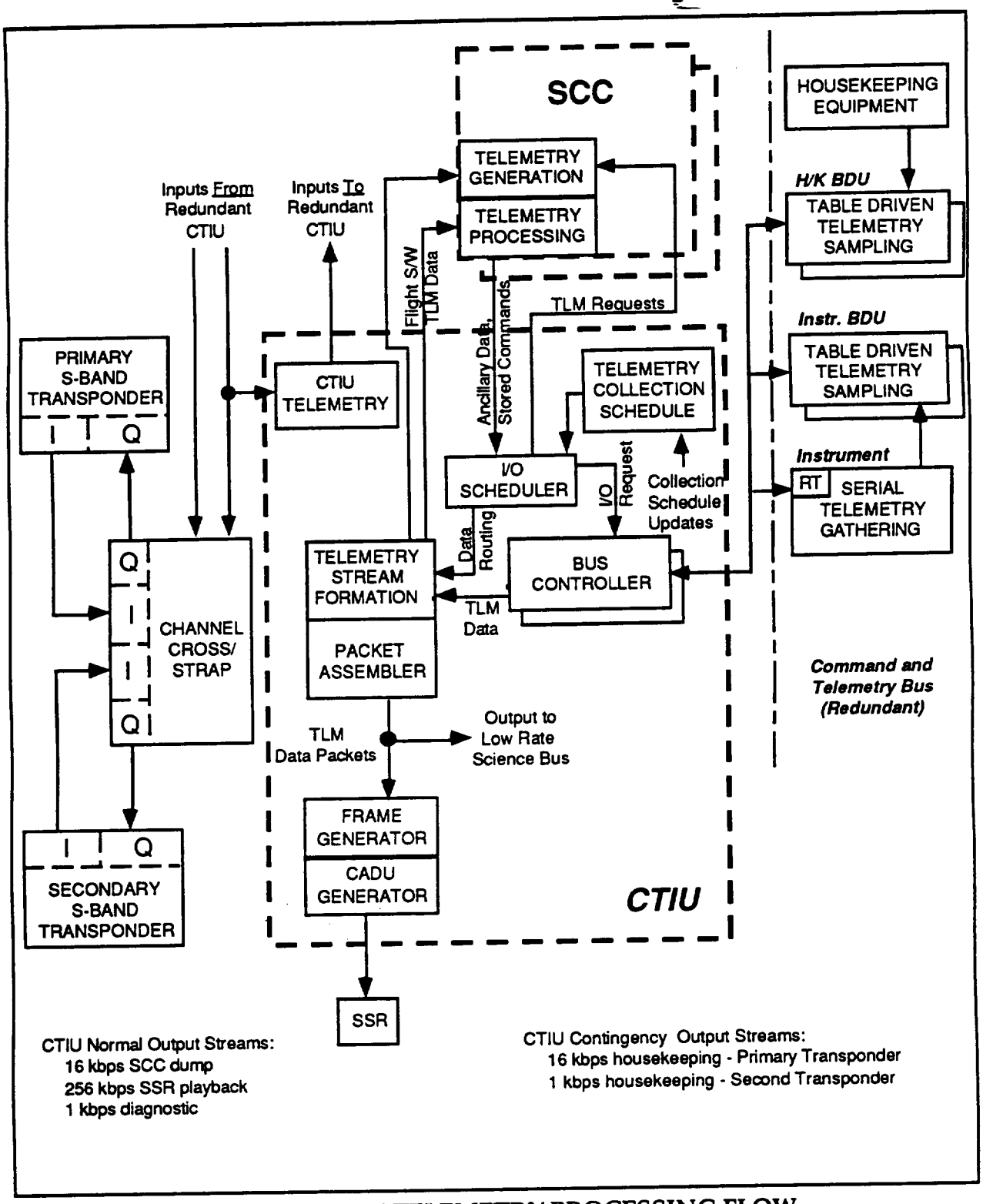

Figure 14 CTIU TELEMETRY PROCESSING FLOW

The active CTIU also provides the Spacecraft master clock and time services. The Master Oscillator (MO) provides the frequency reference signals to the S-Band transponder and CTIU with a frequency accuracy of 1 part in 10^8.

The CTIU propagates the master Spacecraft Clock using the MO frequency reference. The difference between the Spacecraft Clock and Universal Time Code (UTC) is the Clock error, which will grow due to the time-integrated effect of MO frequency errors. The Clock error must be periodically measured, and must be corrected when it approaches 30 milliseconds. The CTIU supports the accurate measurement of the Clock error via the ground based NASA User Spacecraft Clock Calibration System (USCCS). The USCCS is a distributed system using TDRSS White Sands Ground Terminal (WSGT), Network Control Center (NCC), EOS Data and Operations System (EDOS), EOC, and the on-board transponder to determine and correct the Spacecraft Clock error. USCCS software is required in the EOC to process the information and provide the on-board clock bias. The USCCS system currently guarantees calibration accuracy of +/-5 microseconds with respect to UTC. It is anticipated that EOC would request a clock calibration as often as once per day, and will update the Clock bias as necessary to maintain 10 microsecond accuracy.

The Spacecraft Clock may be set and adjusted either by ground command or from SCC-resident software. Both initialization and delta-time (fine adjustment) commands are supported. Clock initialization commands generally cause service interruption in the navigation system and will be used only for system initialization and failure recovery. Delta-time adjustment commands may be executed with a 1 microsecond accuracy and cause minimal disturbance to the system for short periods of time. Delta-time adjustments will be used for clock adjustments when necessary. Clock adjustment and bias update operations will be scheduled to provide minimum perturbation to instrument operations. The EOC FOT will provide coordination of all clock adjustments and bias updates and notification of all users of time-tagged Spacecraft data, as required.

The CTIU also provides two separate time and synchronization services :

a. The Standard Time (ST) service provides moderate accuracy synchronization and Time Of Day (TOD) information in support of Spacecraft housekeeping functions. In general, Spacecraft functions (except for navigation) do not require knowledge of Coordinated Universal Time Code (UTC), but some functions such as stored command processing do require Time Of Day (TOD) knowledge.

b. The Precise Time (PT) service delivers high accuracy, high precision time data to the science instruments and the on-board navigation function, which have more stringent accuracy requirements. The instruments require an on-board time reference accurate to within 100 microseconds relative to UTC. The desired accuracy for navigation measurement data time tagging is +/- 10 microseconds.

4.1.4 Science Formatting Equipment

The Science Formatting Equipment (SFE) is part of the high-rate data handling system for the Spacecraft. The major function of the SFE is to internally route science data from the SSR, High Rate instrument and Low Rate Science Bus input ports to the appropriate SSR, KSA and DAS modulator output ports. Data routing in the SFE consists of processing the asynchronous packetized input data and transferring the data, in the proper format, to the KSA and/or DAS modulators or to the SSR output (record) port at data rates up to 150 Mbps.

The SFE is fully redundant, including the buses, the bus controllers, and the internally cross-strapped input and output ports. The SFE generates all internally used frequencies.

The SFE input interfaces are defined as follows:

a. The Low Rate Science Bus provides for up to 6 remote terminals including the instruments and the 2 CTIUs. The Low Rate Science Bus will carry telemetry data, ancillary data, and low rate science instrument (CERES and MOPITT) data with a maximum aggregate input data rate of 200 kbps. The SFE will control the Low Rate Science Bus via two Bus Controllers, only one of which will be active at any given time.

b. Each of the SFE High Rate serial input ports will accept variable size packets of science data at up to 50 Mbps from the high rate data Instruments.

c. The SFE will receive SSR playback data on two redundant ports, only one of which will be active at any time. The data rate for the active port will be selectable at 0, 105 or 150 Mbps.

d. The BDU interface provides control of the SFE configuration, operating mode and input/output rates through either SCC or ground generated commands

The SFE output interfaces are as follows:

a. The SFE will output independent data streams to each channel of the redundant KSA and DAS modulators. The KSA modulators each have a single channel, while the DAS modulators each have two independent channels.

b. The SSR record interface consists of unidirectional ports from the SFE to the SSR. Only the SSR Record interface port which is connected to the active SSR controller will be active. The SFE/SSR record data stream consists of Channel Access Data Units (CADUs) at a fixed recording rate of 150 Mbps.

c. The BDU interface provides for the collection of SFE housekeeping telemetry During normal operations the SFE will be configured to output specific data streams, accepting and routing instrument and Low Rate Science Bus data to the SSR and the modulators:

    1. The SSR record output will be configured to record all High Rate instrument and Low Rate Science Bus data.

    2. The KSA modulator output will be configured for SSR playback via TDRSS, requiring ground commands during each TDRSS contact to turn the SFE playback clock on and off.

    3. The Direct Access System (DAS) Direct Broadcast (DB) link will transmit real-time MODIS instrument data.

    4. The DAS Direct Downlink (DDL) will transmit ASTER real-time data.

    The FOT will monitor the SFE performance during real-time housekeeping telemetry data reception.

The SFE interfaces are shown in Figure 15.

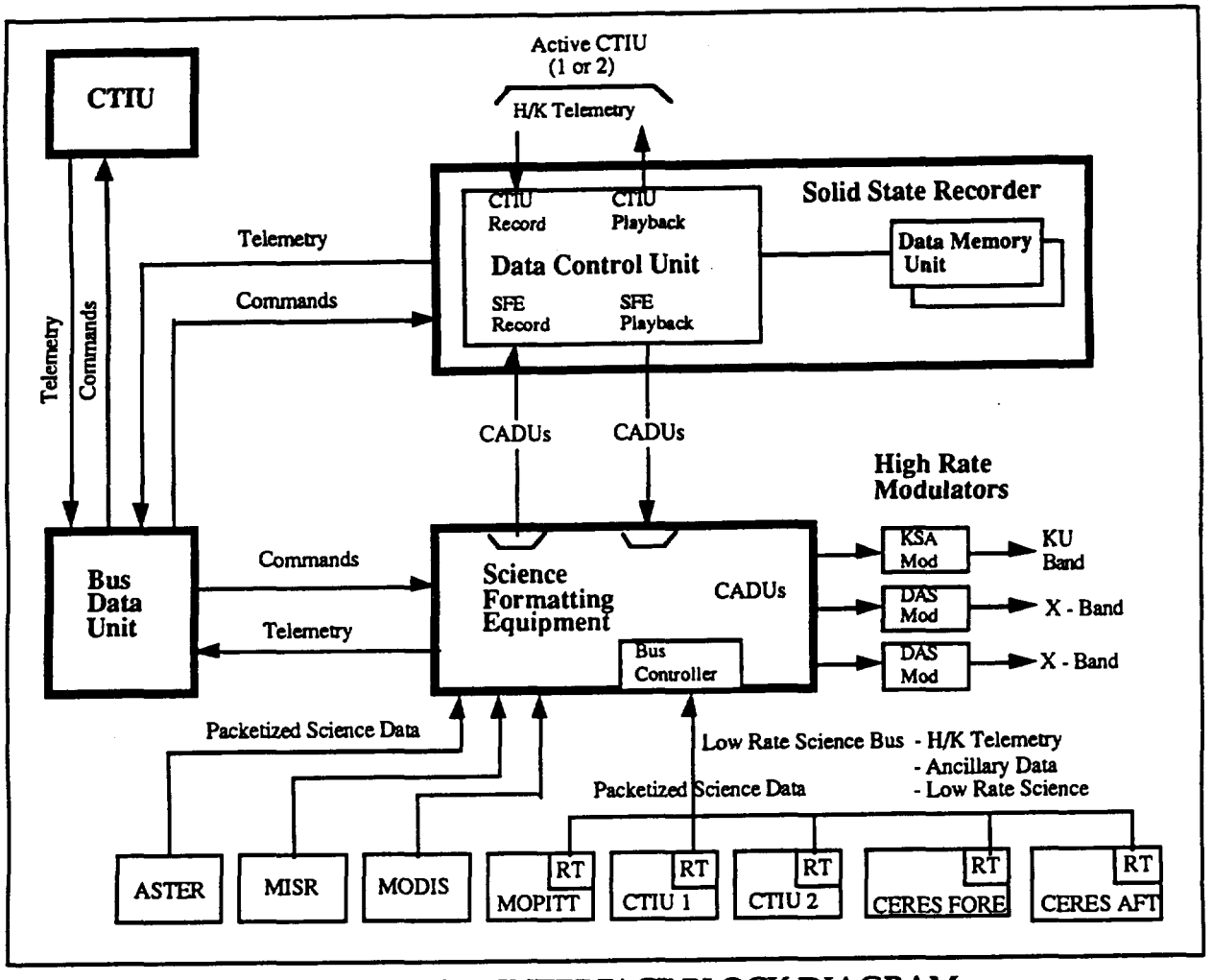

FIGURE 15 SFE INTERFACE BLOCK DIAGRAM

4.1.5 Solid State Recorder

The Solid State Recorder (SSR) is a high capacity data storage device consisting of two redundant Data Control Units (DCUs), and two identical Data Memory Units (DMUs). Figure 16 shows the SSR basic configuration. In operation, only one DCU is active at a given time. The DCU contains the record/playback processing, and command and telemetry processing. A part of the 2.4 Gbit DCU memory (357 Mbit) is allocated to housekeeping telemetry data storage. The total 140 Gbit memory capacity is provided by the two DMUs plus the local memory contained in the DCU. The SSR may be commanded into a Low Power Mode in order to provide the CTIU interfaces and the associated record/playback functions while minimizing the SSR power dissipation. In the Low Power Mode, only the active DMU and its local memory is powered and housekeeping telemetry record and playback via the CTIU is available. Low Power Mode is entered when the SSR is powered up and may be entered by command from the Science Mode.

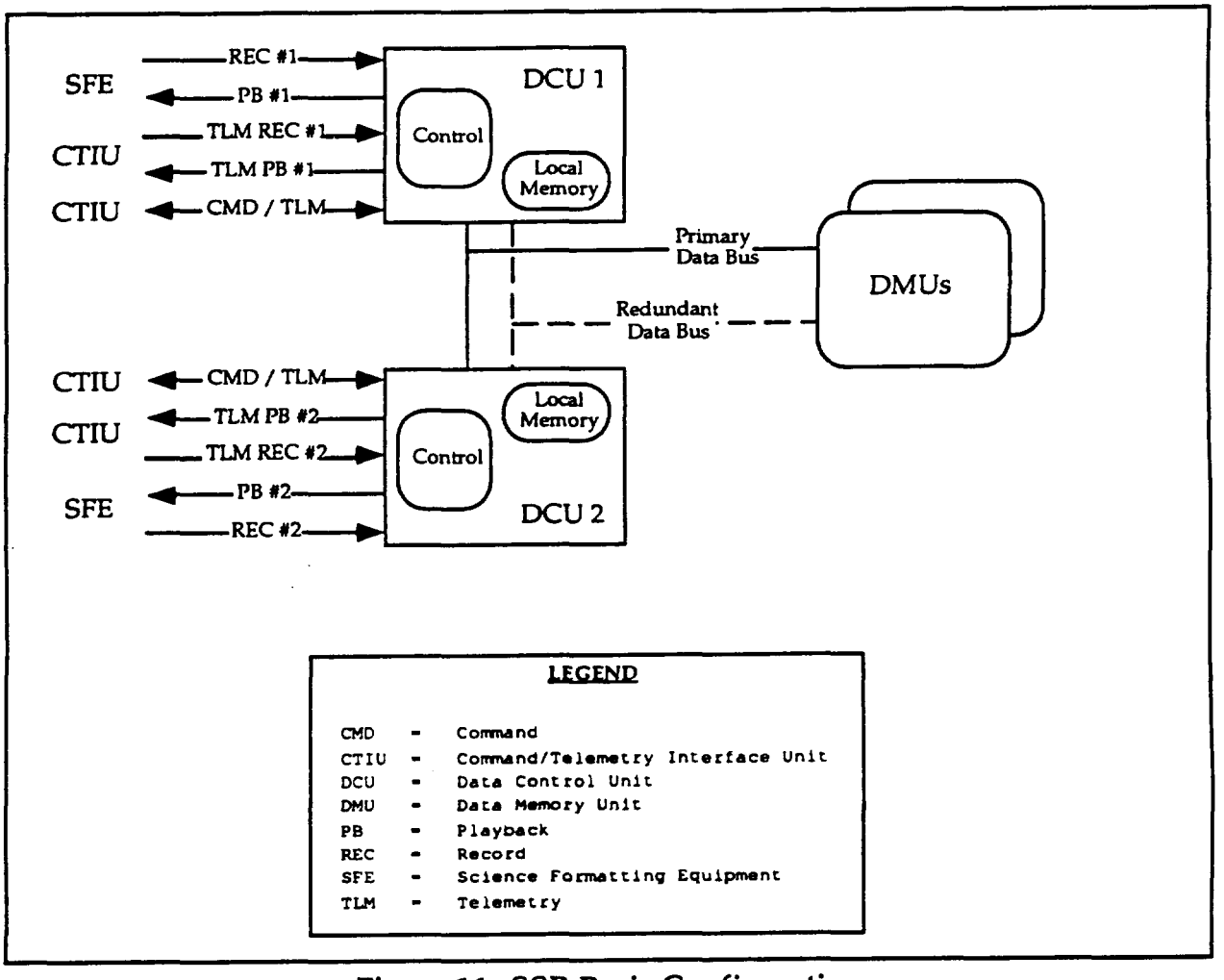

Figure 16 SSR Basic Configuration

The SSR is capable of simultaneously recording and playing back science data via interfaces with the Science Formatting Equipment (SFE). Concurrently the SSR is capable of recording or playing back housekeeping telemetry data via an interface with the CTIU. The SFE and CTIU interfaces operate independently of each other.

The SSR is capable of recording science data from the SFE at a data rate of 150 Mbps. The SSR will sort and record spacecraft science data in separate logical data buffers sorted according to the Virtual Channel Identifier (VCID) of the data source. Up to eight science data storage areas [circular first in first out (FIFO)] buffers may be provided, each accepting data from a single or multiple VCIDs. The four ASTER VCIDs may be directed to a single data buffer. Figure 17 illustrates the SSR science data buffer utilization. This capability will provide for selective playback of the science data. The proposed buffer sizes will accommodate at least one full orbit of data when instruments are operated in their predicted profiles. The current proposed buffer sizes are shown in Table II. Each SSR buffer may be commanded to allow the oldest data to be overwritten or to protect the data (overwrite inhibited).

Table II Proposed SSR Buffer Sizing

Data Type	Buffer Size	Remarks
Housekeeping	357 Mbits	Four Orbits of data
Low Rate Science	357 Mbits	105 minutes of data
MODIS	44.8 Gbits	60 mins day rate, 50 mins night rate
MISR	24.9 Gbits	67 mins of data. > 1 orbit nominal ops
ASTER	69.6 Gbits	12.9 mins at 90 Mbps.

The SSR is capable of playing back recorded science data at a maximum data rate of 150 Mbps. The SSR input and output data streams consist of integral numbers of 8192 bit blocks which are referred to as Channel Access Data Units (CADUs). The first requested CADU for each requested playback shall be preceded by the last 100 to 256 CADUs played back from this buffer during the previous playback. The SSR will not erase science data during playback, but the oldest data will be overwritten when a new recording session occurs directly over previously recorded data. The science data output stream from each buffer will be in the same time order in which it was recorded. The SSR is capable of playing back any ground-specified portion of the stored science data.

The SSR is capable of recording and playing back 16 Kbps Spacecraft housekeeping telemetry data via cross-strapped interfaces to the Spacecraft CTIUs. The housekeeping input and output data streams consist of housekeeping telemetry CADUs which are recorded in and played back from the 357 Mbit circular FIFO DCU buffer. The SSR can record or playback the housekeeping data concurrently with the science data playback, but cannot record and playback housekeeping data simultaneously. After four orbits the DCU buffer will be filled, and the SSR will overwrite the housekeeping data.

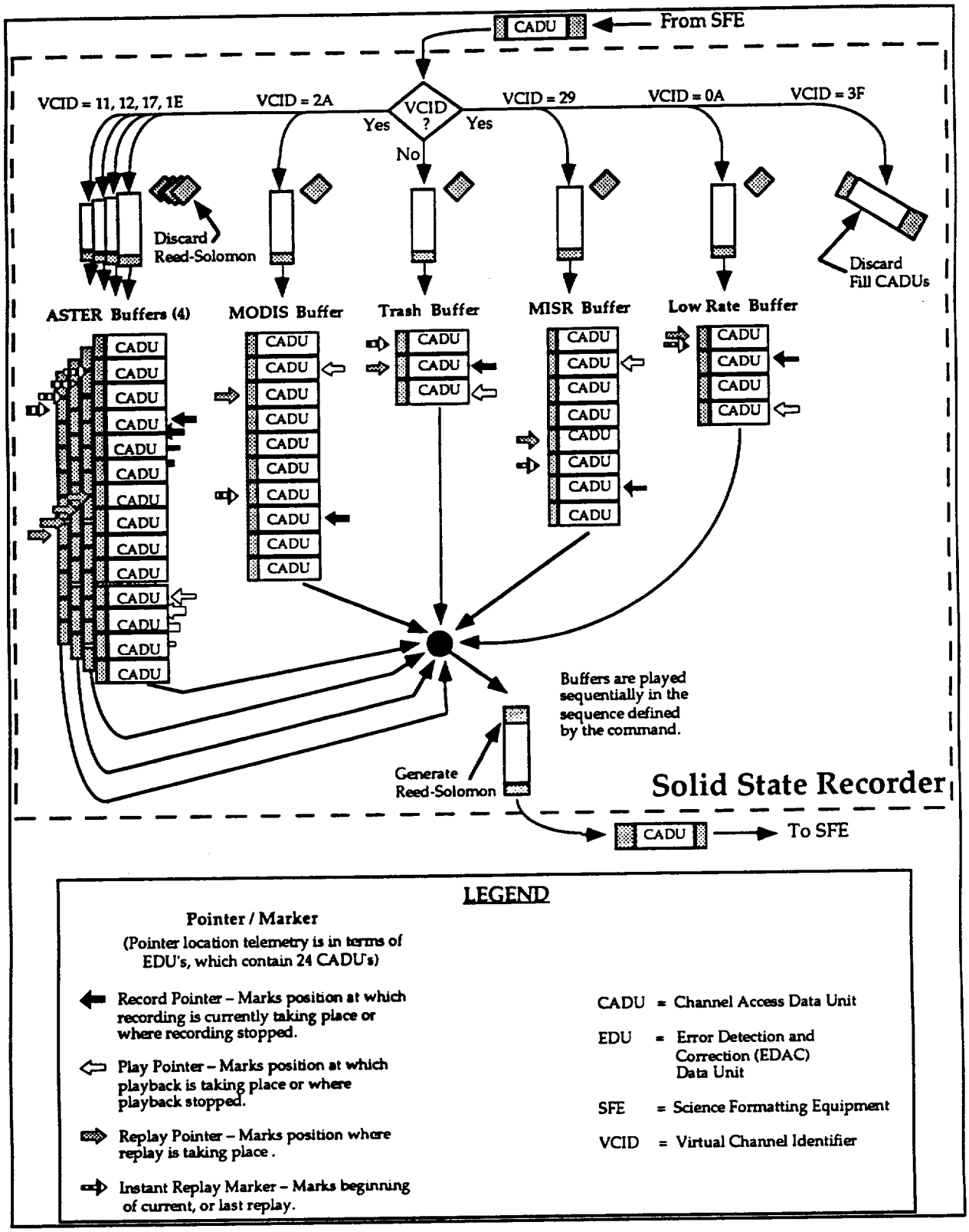

Figure 17 SSR Science Data Buffer Utilization

See Figure 18 for a typical operating scenario.

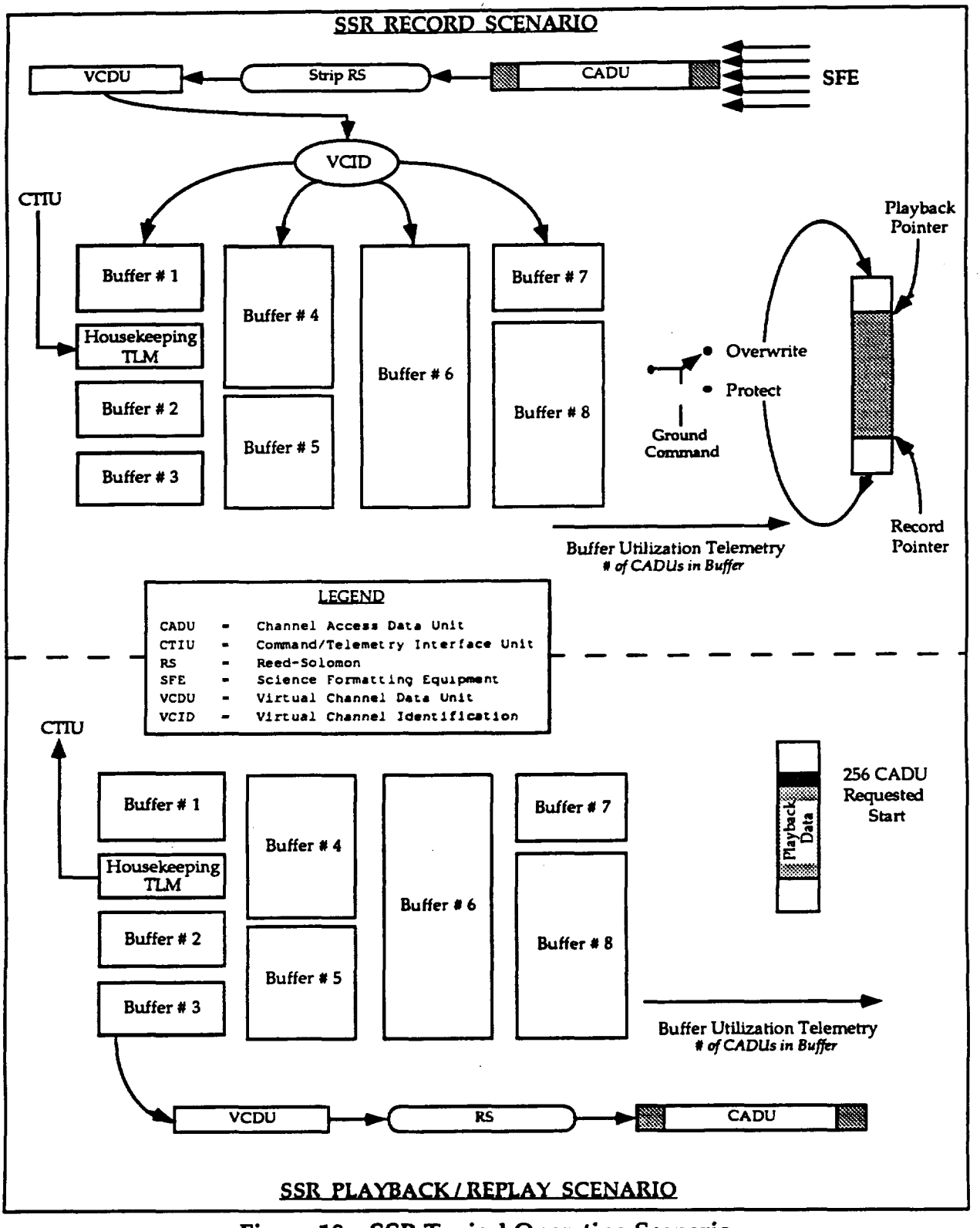

Figure 18 SSR Typical Operating Scenario

The SSR plays back stored housekeeping data at a ground-commanded rate of either 256 Kbps (via TDRSS) or 512 Kbps (via DSN/GN/WOTS). The output data stream consists of integral numbers of CADUs. The first requested CADU for each playback will be preceded by the last 100 to 256 CADUs played back from the buffer during the previous playback. The SSR will not erase telemetry data during playback, but the data will be overwritten when a new record segment occurs directly over previously recorded data regardless of the playback status of the previously recorded data. The telemetry data output stream will be in the same time order in which it was recorded.

The SSR telemetry will provide status information for each buffer which will be evaluated by the EOC to assure complete data retrieval. The status information will indicate:

a. The locations of the beginning of data that has not been dumped
b. The current location of the record pointer
c. The location of the dump pointer.

The EOC will track the instrument science and the housekeeping telemetry data times, the data position in the SSR memory, and the playback status of recorded data in order to ensure no loss of either science or housekeeping data.

Normal SSR operation will be to record all science data, with the SSR always in Record mode and the SSR data input being determined by the instrument operations. The high rate instruments and Low Rate Science Bus output will be recorded in separate buffers. The operating plan for retrieving science data from the SSR is to play back the data during two nominal 10 minute TDRSS contacts during each EOS-AM orbit. At the data rates available, a full SSR (all buffers full) would take approximately 18 minutes to dump completely. Since the peak data generation of the instrument set occurs during the daylight observations, and six to eight minutes of SSR playback will occur during each ten minute TDRSS contact, all data contained on the SSR may not be retrievable during a single 10 minute contact.

TDRSS contact spacing and location will be influenced by the Spacecraft/TDRS/Earth geometry and the TDRSS scheduling requirements, but equally spaced contacts (approximately 40 minutes apart) are the current plan.

SSR operations will be controlled by a combination of stored and real-time commands. Science instrument data start/stop operations will be initiated by stored commands generated by the EOC scheduling function, while memory configuration, mode change, playback and communication link configuration commands will be via real-time commands.

Nominal SSR operations (see Figure 19 for the SSR operation profile) will be as follows:

a. The housekeeping telemetry data will be continuously recorded in the DCU memory, overwriting the housekeeping buffer after approximately 3.5 orbits. The housekeeping buffer will be played back only in the event of a Spacecraft anomaly or to provide specific data for ground analysis.

b. The SSR will continuously record CERES, MOPITT, ancillary and telemetry data from the Low Rate Science Bus via the SFE into the Low Rate buffer. This data will continue to be recorded even while the SSR is being played back.

c. The SSR will record science data from the instruments via the SFE into their respective buffers. The ASTER data may be recorded into one buffer or may be sorted by VCID into four different buffers.Instrument data will continue to be recorded even if the SSR is being played back during the record period.

d. The SSR science data will be played back during each scheduled 10 minute TDRSS contact (twice per orbit). The science data buffers will be played back in sequence, oldest data first, such that sufficient space is available in each buffer to accommodate the science data scheduled to be recorded before the next TDRSS contact.

e. The ASTER and MISR buffers will be completely played back if possible.

f. The LOW Rate and MODIS buffers will nominally never be completely emptied since the instruments will be continuously producing science data. Playing back older science data while simultaneously recording new science data will be the normal operational configuration.

g. SSR playback start and stop will be controlled by ground command.

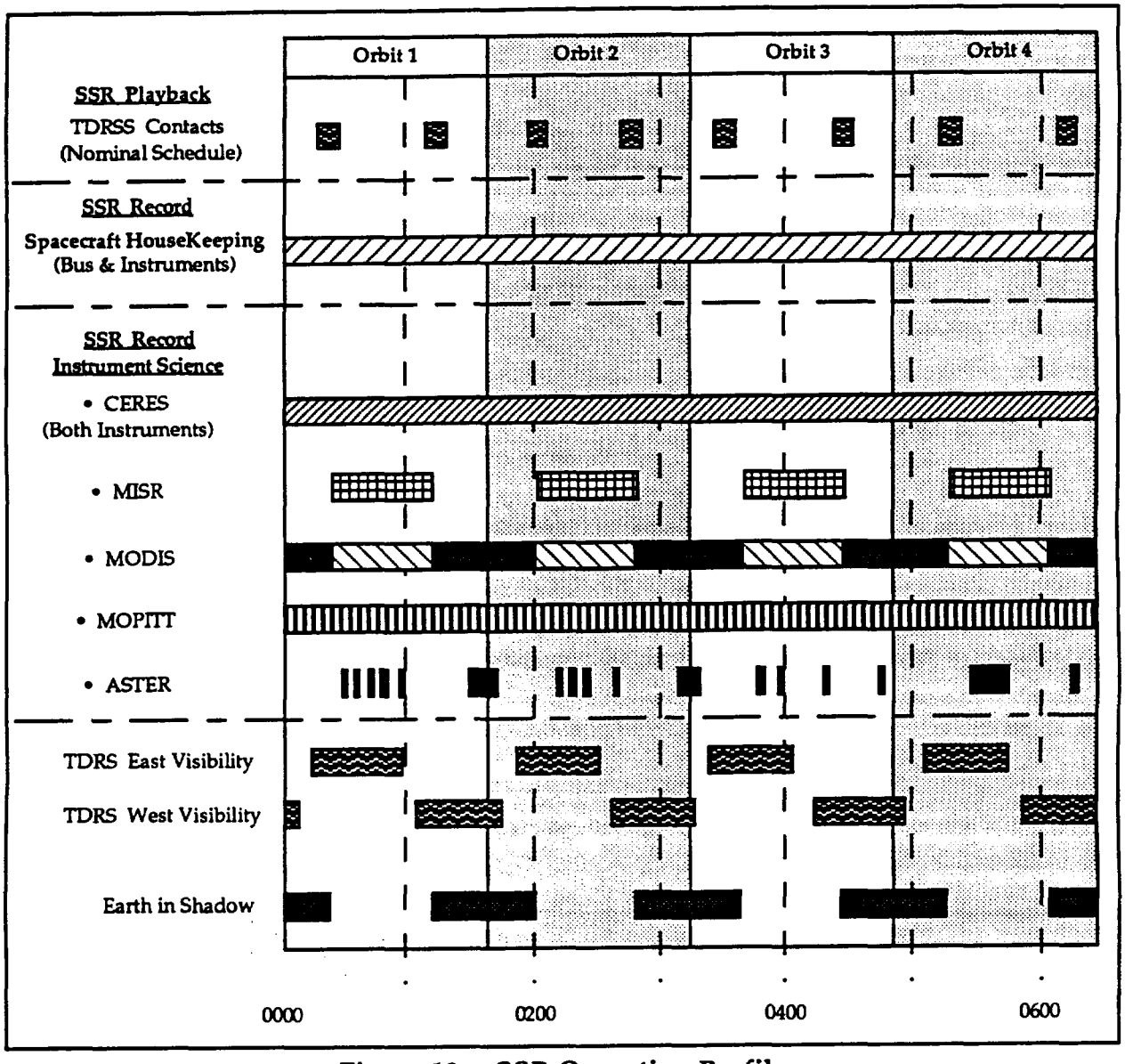

Figure 19 SSR Operation Profile

4.1.6 Bus Data Unit

Bus Data Unit(s) (BDU) provide standard command and telemetry interfaces between the Spacecraft housekeeping components and instruments. The BDU is an internally redundant device.

The BDUs collect, reformat and transmit housekeeping and instrument telemetry data to the active CTIU via the C&T bus. The BDU provides analog/digital signal conversion and conditioning.

The BDUs also receive command data from the active CTIU via the C&T bus, processing and issuing the commands. BDUs may issue relay drive, logic pulse or serial commands.

4.1.7 Initial Spacecraft Operation

The Spacecraft command and telemetry systems are active during all Spacecraft mission phases, and are fully available to support initial activation and subsequent operation of CERES.

The Spacecraft operational orbit is acquired during the Spacecraft Operational Initialization Phase. A complete housekeeping and instrument equipment checkout is performed and a fully operational system state is established. The EOC activities are augmented by Spacecraft engineering support from the contractor's facility and Instrument Team representatives.

Figure 20 shows a typical time-line representation of the activities during the Operational Initialization Phase.

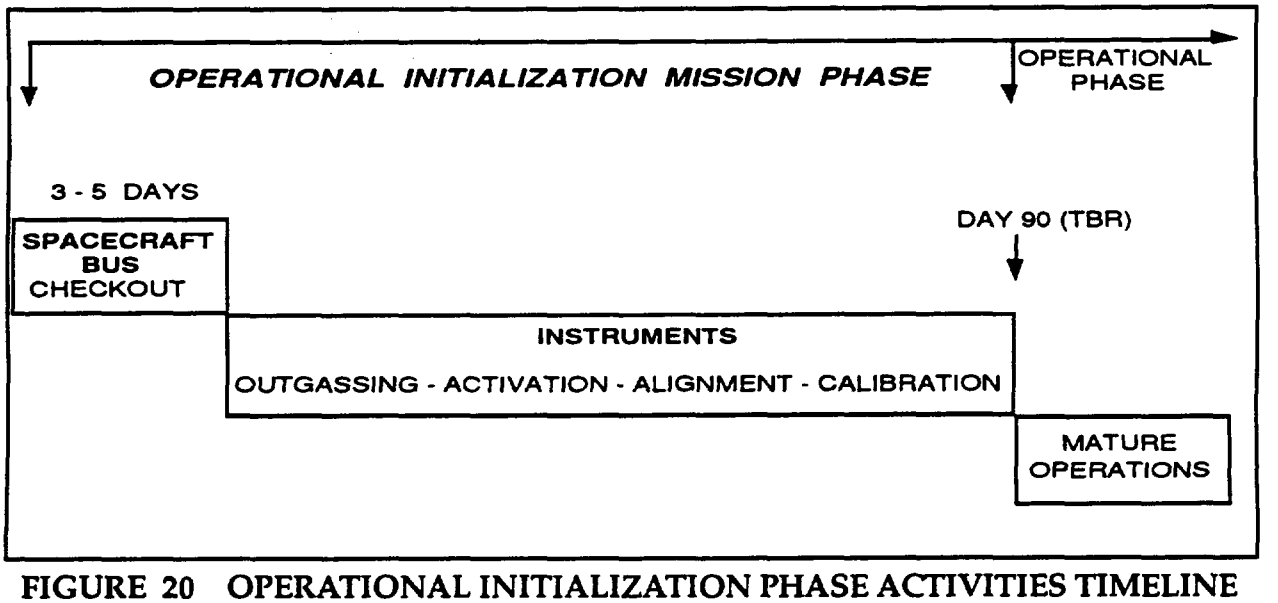

FIGURE 20 OPERATIONAL INITIALIZATION PHASE ACTIVITIES TIMELINE

4.1.8 Spacecraft Maneuver Operations

Throughout the EOS-AM mission, periodic orbit maintenance maneuvers are executed by the Spacecraft to maintain the operational (705 km) orbit requirements. The frequency of orbit adjusts is TBD. Each maneuver is planned and scheduled in advance of execution. Orbit maintenance maneuvers are not enabled without providing an opportunity for appropriate instrument reconfiguration, except in Spacecraft emergency situations. The Propulsion Subsystem provides impulse for orbit maintenance.

The Spacecraft is monitored by the Flight Dynamics Facility (FDF) through TDRSS ranging, and by the EOC, which uses TDRSS Onboard Navigation System (TONS) determinations. When required, orbital adjust calculations are performed to determine the direction and length of the burn, and the required start time. These calculations are used to generate stored commands. Upon completion of the burn, Spacecraft orbital parameters are monitored to determine the need for further correction. Figure 21 summarizes the steps described in paragraph 4.1.8

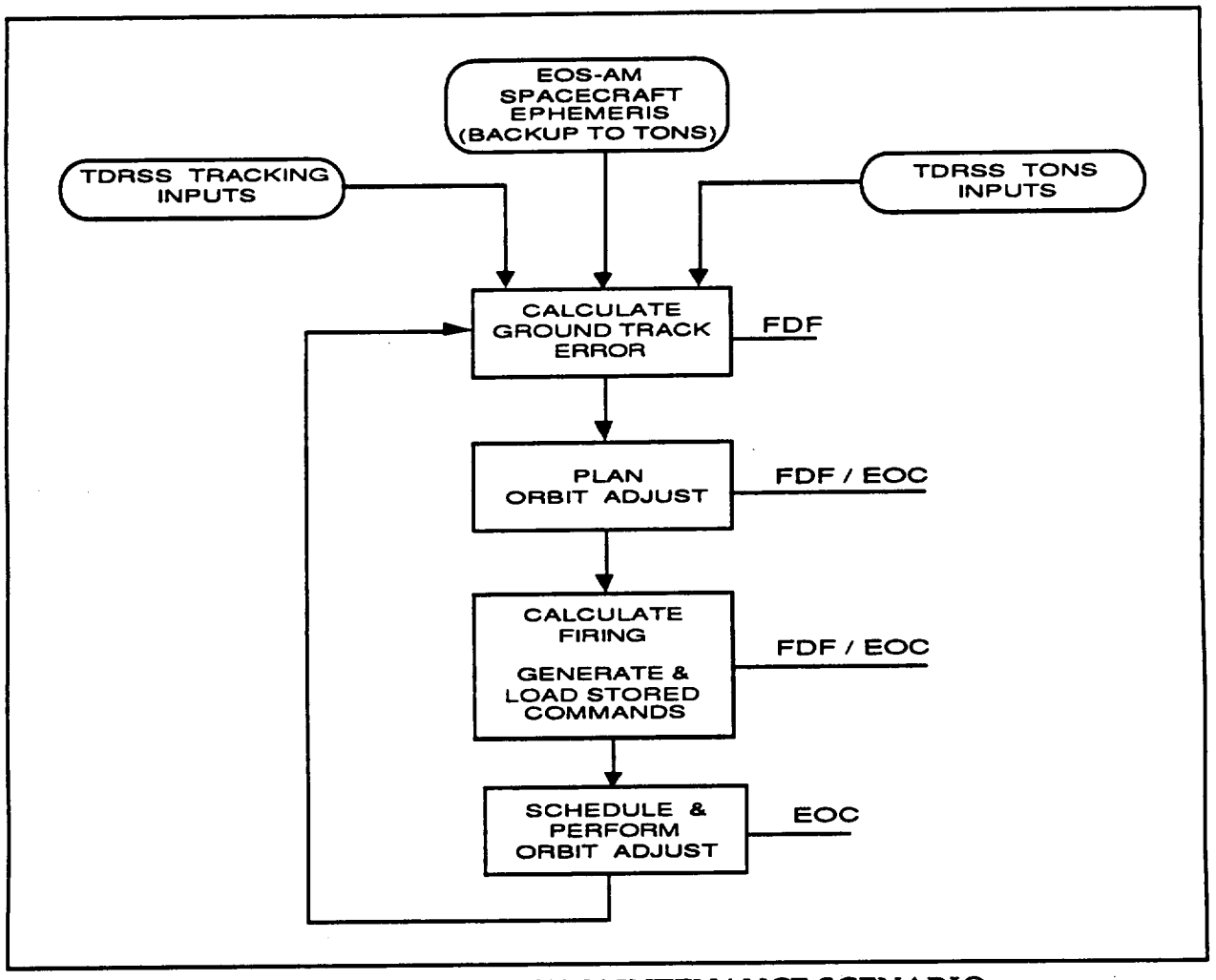

FIGURE 21 ORBIT MAINTENANCE SCENARIO

4.1.9 Autonomous Operations

The Spacecraft Fault Detection, Isolation and Recovery (FDIR) System protects the Spacecraft Bus and instruments in the event of survival-critical failures that occur in the absence of ground command and control. To accomplish this, the FDIR system autonomously switches the Spacecraft's configuration (equipment configuration and operating mode) in response to predefined survival-critical faults to isolate faults and prevent propagation. The FDIR system resides mostly in the SCC. This system provides autonomous action only if the fault detected is time critical to Spacecraft survival.

The major Spacecraft functions assessed by the on-board FDIR system requires a Flight Operations Team response in the event of function loss. The Flight Operations Team takes predefined actions in the event a FDIR event is detected.

The Spacecraft Safe Mode or Survival Mode is entered only after unsafe conditions or pending unsafe conditions are detected by the Flight Operations Team or the Spacecraft on-board FDIR system.

The Spacecraft may autonomously transfer into Safe Mode which may involve a degraded Spacecraft operation, and may also involve interruption of stored-command execution (only in the case of SCC or CTIU/C&T Bus loss).

Safe Mode or Survival Mode recovery occurs in predefined ground command / control steps only after detailed analysis and Spacecraft subsystems checkout and Operational Readiness verification.

4.1.10 Spacecraft Bus Operating Modes

The Spacecraft Bus operating modes are defined by the minimum functional and performance capabilities that are required to satisfy mission conditions and constraints.

Transition between a primary mode and a back-up mode is initiated by either Ground Command (stored or real-time) or on-board FDIR logic. The on-board Spacecraft Bus computer [SCC] autonomously initiates a transition from a primary mode (ie; Science Mode) to a back-up mode (ie; Survival Mode) following violation of preselected FDIR criteria. Exit from a back-up mode to a functionally more capable mode is by ground command only.

Figure 22 shows the Spacecraft operating modes available during each mission phase and their status (primary availability or back-up availability).

SPACECRAFT SYSTEM MODES	EOS-AM1 SPACECRAFT MISSION PHASES						
	Pre-Launch	Launch / Ascent	Orbit Acquisition Initialization	Orbit Acquisition	Operational Initialization	Operational	End of Mission
Ground Test Mode	P	B					
Launch/Ascent Mode		P	P				
Standby Mode			P	P	P	B	
Science Mode					P	P	
Delta-V Mode				P	P	P	
Survival Mode		B	B	B	B	B	P
Safe Mode		B	B	B	B	B	B

LEGEND
P = PRIMARY MODE
B = BACKUP MODE

FIGURE 22 SPACECRAFT OPERATING MODES AVAILABILITY

The Spacecraft Bus system operating modes are:

a. **Ground Test Mode.** -- The Ground Test Mode is a non-flight mode, used by the Launch Operations Team, in the Pre-Launch Phase following Spacecraft to Launch Vehicle integration. During the Ground Test Mode, the Spacecraft Bus undergoes comprehensive performance testing. Instrument science will not be tested during this mode but the integrity of instrument interfaces are verified. No deployments will be performed during the pre-launch tests.

   The Spacecraft is essentially in a check-out state receiving power from the Launch Vehicle T - minus zero umbilical, at the launch pad. The Spacecraft readiness for launch is established. The batteries are charged and equipment powered, as required, for low rate telemetry and commanding. Telemetry is provided to the Ground Support Equipment via the T - minus zero umbilical Spacecraft 1 kbps health and safety telemetry will be multiplexed with the Launch Vehicle telemetry and made available via the Launch Vehicle telemetry and antenna systems after Spacecraft disconnect from the T - minus zero umbilical. The software and data tables are loaded with the appropriate parameters for Orbit Acquisition Initialization and Orbit Acquisition Phase activities.

   The Ground Test Mode is entered by ground command. The Ground Test Mode is exited into the Launch/Ascent Mode for the Launch Phase upon the Spacecraft going to internal power.

b. **Launch/Ascent Mode** -- The Launch/Ascent Mode is a primary mode in both the Launch/Ascent and Orbit Acquisition Initialization Phases. The instruments are powered off with survival heaters enabled. Housekeeping equipment is powered as required for low-rate commanding and telemetry, with survival and operational heaters enabled.

The Flight Operations Team will monitor the Spacecraft telemetry received via the launch vehicle when it becomes available. No direct Flight Operations Team command/control involvement is necessary during the Launch and Ascent, assuming nominal Spacecraft conditions and activities.

Upon detection of separation from the launch vehicle, preprogrammed logic will be activated to perform major early mission activities, including:

- An attitude maneuver to obtain an Earth-oriented attitude
- Deployment of the solar array to support the bus load and begin battery recharge
- Establishment of an S-band command/telemetry link, primarily with TDRS via the omnis
- Deployment of the High Gain Antenna
- Enable the FDIR algorithms necessary for autonomous transition to Survival Mode or Safe Mode in the event of predefined failures. These algorithms will remain enabled throughout the subsequent mission phases.

Launch/Ascent preprogrammed activities will, as a backup, accept real-time ground commanded initiation, provided that a communication link with the ground has been established.

Nominally, exit from the Launch/Ascent Mode to Standby Mode will be ground commanded when the major early mission events (e.g. earth acquisition, energy balance, High Gain Antenna deployment) have been successfully completed. If an anomaly occurs after the Spacecraft has separated from the launch vehicle, the transition from the Launch/Ascent Mode to either the Survival Mode or Safe Mode may be commanded either by autonomous on-board logic or by ground command.

c. **Standby Mode** -- Standby Mode is used during Spacecraft subsystem checkout or as a back-up to the Science Mode. Although instrument science is not supported in this mode, instrument housekeeping functions can remain operational. Services provided during the Standby Mode include:

- Full power is provided. The Spacecraft Bus maintains a positive energy balance. The Spacecraft solar array tracks the sun.
- Thermal control is provided.
- Nominal S-Band Spacecraft Bus and instrument housekeeping (16 Kb) / health and safety (1 Kb) telemetry are provided.
- Commands are processed and distributed.
- Spacecraft housekeeping, health, and safety data storage and retrieval are operational.
- The SCC is operational.
- The Spacecraft Guidance and Navigation functions operate nominally, providing Earth-pointing (precision if transition is from Science Mode). The TONS system is operational with the Spacecraft ephemeris loaded as back-up.

d. **Science Mode** -- The Science Mode is the primary mode used during the Operational mission phase and during on-orbit instrument checkout. During Science Mode the Spacecraft Bus provides the full complement of resources. Services provided during the Science Mode include:

- Full power is provided. The spacecraft Bus maintains a positive energy balance. The solar array tracks the sun.
- S-Band Spacecraft Bus and instrument housekeeping / health and safety telemetry are provided.
- Science data transmission (real-time or playback) capability on the K-Band and Direct Access System are provided.
- Ancillary data and time-tagged navigational data functions are provided.
- Commands are processed and distributed.
- Spacecraft high rate and low rate data storage and retrieval are operational.
- The SCC is operational including High Gain Antenna pointing and control.

- The Spacecraft Guidance and Navigation functions operate nominally, providing precision Earth-pointing. The TONS system is operational with the Spacecraft ephemeris loaded as back-up.

e. **Delta-V Mode** -- The Delta-V Mode is a propulsive mode used to raise Spacecraft altitude from the injection orbit to mission operational altitude, circularize the mission orbit and to provide periodic correction to maintain the mission orbit. At a minimum, in the Delta-V Mode, the Spacecraft can be at survival power levels, and at a maximum, the Spacecraft can be at full power.

Best case: (such as planned Delta-V during Operational Phase)

- Full power is provided.
- The spacecraft Bus maintains a positive energy balance.
- The solar array tracks the sun with nominal rotation.
- Science data transmission (real-time or playback) capability on the K-Band and Direct Access System could be provided; however, fine pointing and jitter control are not supported.
- Ancillary data and time-tagged navigational data functions are provided.
- Spacecraft high rate data storage and retrieval could be operational.

Worst case: (such as during Orbit Acquisition Phase)

- Survival power (degraded capability).
- Commands are processed and distributed.
- S-Band Spacecraft Bus and instrument housekeeping / health and safety telemetry are provided.
- Spacecraft low rate data storage and retrieval are operational.
- The SCC is operational.
- The Spacecraft Guidance and Navigation functions operate providing Earth-pointing; however, fine pointing and jitter control are not supported. The TONS system is operational with the Spacecraft ephemeris loaded as back-up.

f. **Survival Mode** -- The Survival Mode is a minimal power or power critical mode in which only essential Spacecraft functions (i.e., low-rate commanding and telemetry, instrument survival heaters) are supported. Transition into the Survival Mode causes non-essential housekeeping equipment to power-down.

Instruments are commanded to take action to protect themselves and establish a minimal power configuration. The Survival Mode is the primary mode for the Launch/Ascent, Orbit Acquisition Initialization, Orbit Acquisition, and End of Mission Phases. Services provided during the Survival Mode include:

- The solar array tracks the sun.
- Commands are processed and distributed.
- S-Band Spacecraft Bus and instrument housekeeping / health and safety telemetry are provided.
- Spacecraft critical health and safety data storage and retrieval are operational.
- The SCC is operational. (Best case)
- The Spacecraft Guidance and Navigation functions operate nominally, providing Earth-pointing (Best case); or Sun-pointing, worst case. The TONS system is operational with the Spacecraft ephemeris loaded as back-up.

g. **Safe Mode** -- The Safe Mode is a state in which the Spacecraft Bus is capable of operating partially or completely independent of the SCC. Specifically, the Spacecraft Bus operates in the Safe Mode as long as the Attitude Control Electronics (ACE) performs the attitude control functions.

Safe Mode can be entered via ground command by the Flight Operations Team. Safe Mode is entered autonomously under two circumstances. The first is the loss of SCC - I'm OK - signal and the second is due to GN&C FDIR action. Autonomous Spacecraft entrance into the Safe Mode due to GN&C FDIR occurs if the GN&C FDIR detects an attitude error beyond a given threshold and attitude control is switched to the ACE. Services provided during the Safe Mode include:

Best case:

- Full power is provided The spacecraft Bus maintains a positive energy balance. The solar array tracks the sun with nominal rotation.

- Commands are processed and distributed.
- S-Band Spacecraft Bus and instrument housekeeping / health and safety telemetry are provided.
- Science data transmission (real-time or playback) capability on the K-Band and Direct Access System is provided.
- Ancillary data and time-tagged navigational data functions are provided.
- Spacecraft low rate and high rate data storage and retrieval are operational.
- The SCC is operational.
- The Spacecraft Guidance and Navigation functions operate safely Earth-pointing with degraded pointing accuracy. The TONS system is operational with the Spacecraft ephemeris loaded as back-up.
- Earth Pointing

Worst case:

- Power for survival equipment and instruments
- No command / telemetry until the FOT re-establishes these functions [Command and Telemetry Interface Unit (CTIU) failure scenario].
- SCC non-functional. No SCC services.
- Sun pointing
- Thruster based attitude control

4.1.11 Spacecraft Bus - Instrument Operating Modes Relationships

The Spacecraft Bus operating modes and CERES operating modes are directly interrelated. The Spacecraft Bus provides predefined services and resources for each of its operating modes. CERES operates to predefined tasks for each of its operating modes.

Table III relates CERES operating modes and the Spacecraft Bus operating modes.

TABLE III
SPACECRAFT BUS AND CERES OPERATING MODES

SPACECRAFT SYSTEM MODE	CERES INSTRUMENTOPERATING MODE (CERES FORE or CERES AFT)								
	Launch	Standby	Initial-ization	Sun Cal.	Fixed Azimuth	Biaxial	Diagnostic	Safe	Survival
Ground Test	X								
Launch/Ascent	X								
Standby		X							
Science		X	X	X	X	X	X		
Delta-V		X							
Survival									X
Safe								X	

LEGEND

X = Normal Configuration

4.2 Ground System

The EOS ground system will provide the earth sciences community with a variety of data products obtained from the Earth Observing System spacecrafts. Data archiving, distribution and user interface capabilities will be provided. The ground system will also support the command and control of the EOS-AM Spacecraft.

EOS-AM flight operations will utilize several NASA institutional support facilities along with dedicated EOS facilities. These include the following:

4.2.1 Space Network (SN)

The SN will be the primary data transport system for relaying data between the EOS-AM Spacecraft and the ground, and will provide communication resource scheduling support to the Earth Observing System Data and Information System (EOSDIS). The SN elements will together provide the communications path between the Spacecraft communications subsystem and the EOS Data and Operations System (EDOS). The SN has two parts:

a. **The Tracking and Data Relay Satellite System (TDRSS).** TDRSS comprises the Tracking and Data Relay Satellites (TDRS(s)), the White Sands Ground Terminal (WSGT), and the Second TDRS Ground Terminal (STGT), also located at White Sands.

b. **The Network Control Center (NCC) at the Goddard Space Flight Center (GSFC).** The NCC is the operations center for all SN activities. It provides operational management of all elements of the SN and is responsible for all scheduling activities for the TDRS(s) and ground terminals. The EOS Operations Center (EOC) will interface with NCC for scheduling SN resources. The NCC implements operations, executes schedules, and performs link monitoring and fault isolation.

Figure 23 depicts a top level view of the Space Network scheduling process.

The nominal plan for TDRSS support calls for two contacts 10 minutes in length, per EOS-AM orbit. The requirement for support will be submitted with the specific timing of support services left to be scheduled by the Network Control Center (NCC). A forecast schedule of TDRSS support intervals is released by the NCC approximately one-two weeks beforehand. Specific requests for additional TDRSS support may result in schedule updates up to two days beforehand, and contingency/emergency support arrangements can be made with 10 minutes advance notice.

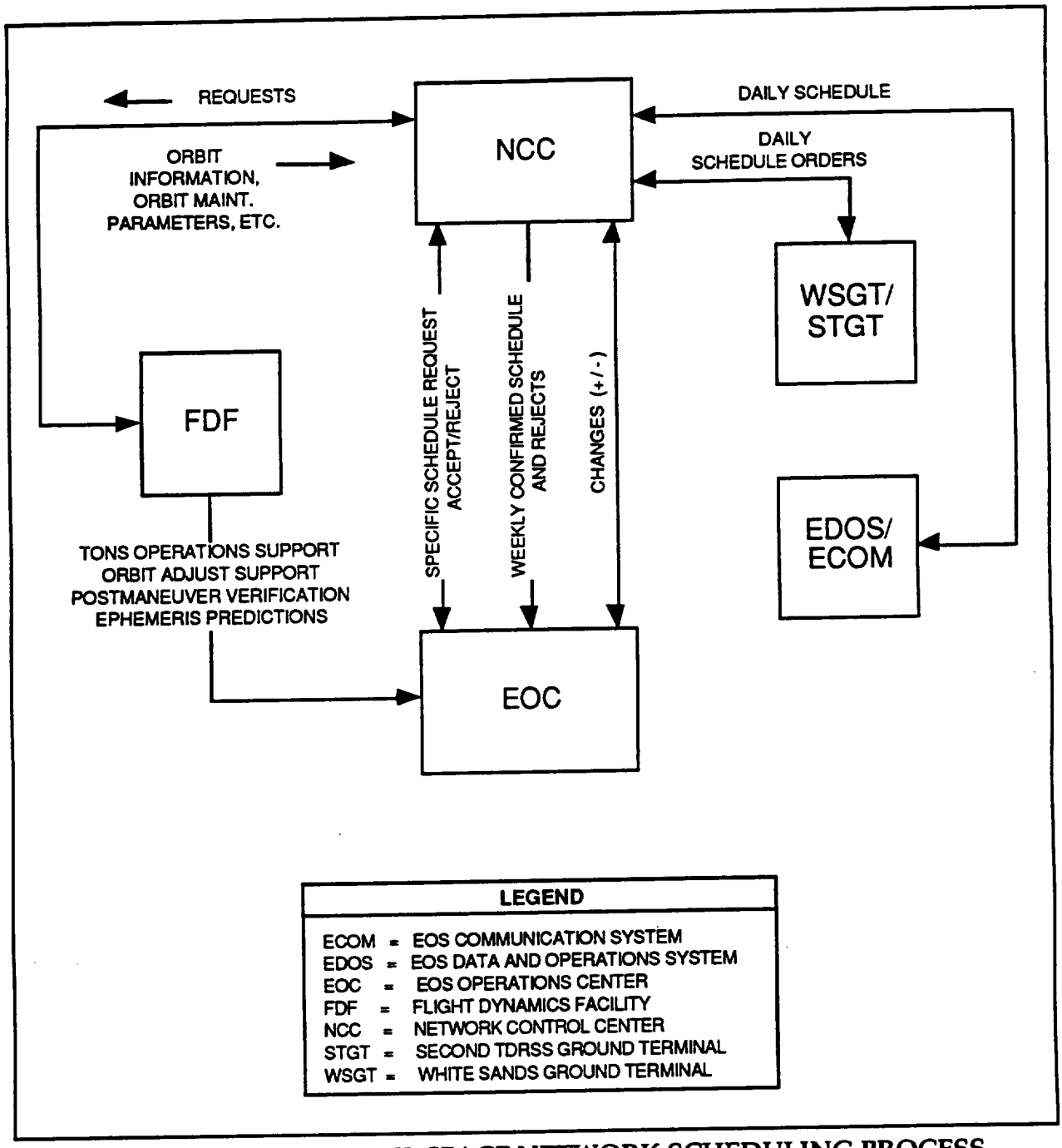

FIGURE 23 TOP LEVEL SPACE NETWORK SCHEDULING PROCESS

Figure 24 shows a timeline of Space Network and EOC scheduling activities during a normal forecast scheduling period and an active scheduling period.

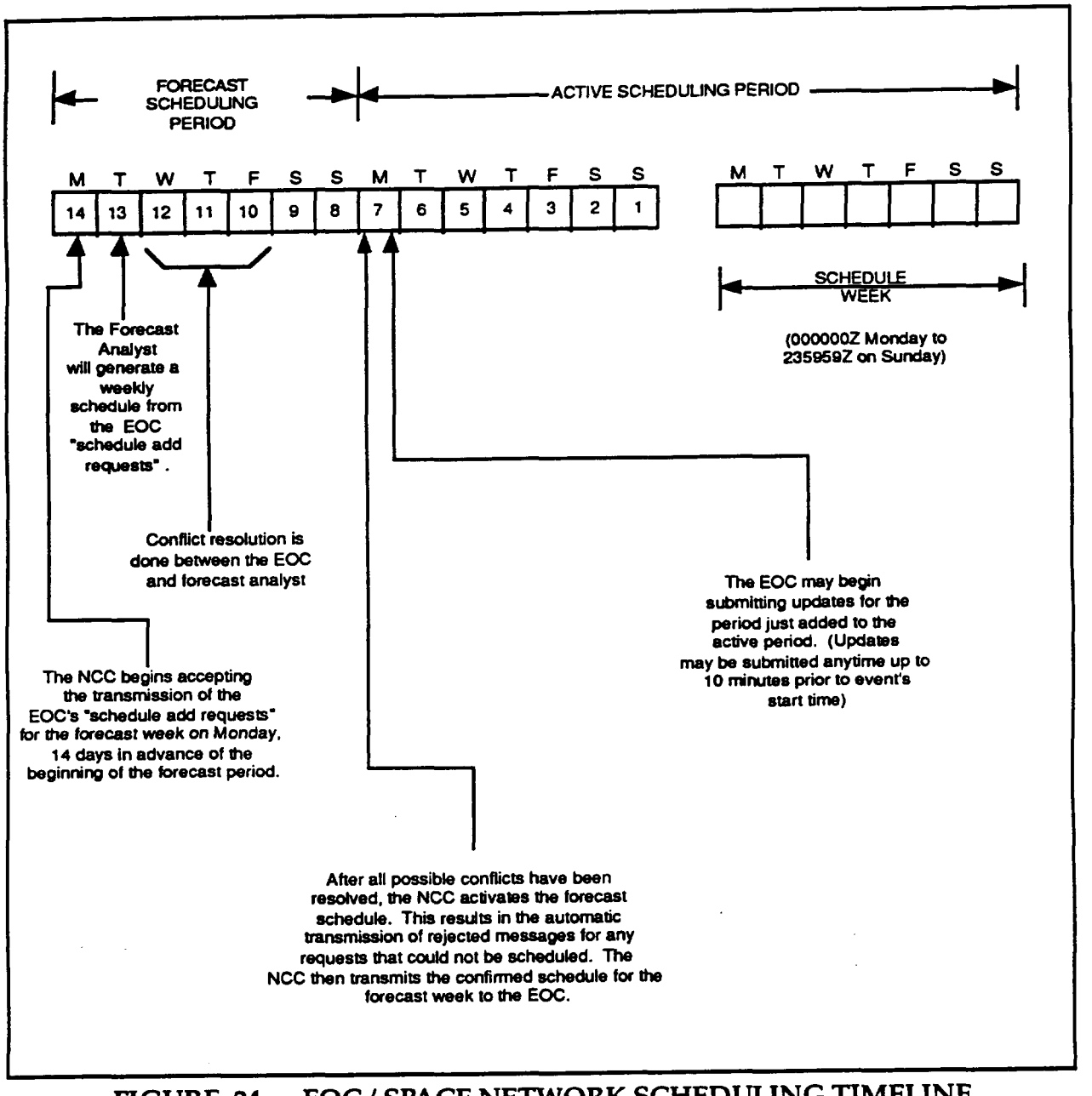

FIGURE 24 EOC / SPACE NETWORK SCHEDULING TIMELINE

4.2.2 Flight Dynamics Facility (FDF)

FDF is an institutional facility located at GSFC that provides orbit, attitude, and navigation computational services in support of flight projects. Prelaunch services include mission design analysis, trajectory analysis, sensor analysis, and operations planning. Operational support services include orbit and attitude determination, anomaly resolution, orbit adjustment planning and maneuver support, sensor calibration, post mission velocity analysis, and generation of planning and scheduling data products.

The FDF will provide operational support to the EOS-AM Spacecraft. The FDF will interact directly with the EOS Operations Center (EOC) to provide TDRSS Onboard Navigation System (TONS) operations support, orbit adjustment support, and post maneuver verification of spacecraft parameters. In addition, FDF provides the EOC with TDRS and EOS-AM Spacecraft ephemeris loads and predictions for planning and scheduling support.

The FDF will routinely provide predicted orbit information for use in flight operations and definitive data for scientific data processing (when requested). The FDF will generate planning aid data to support both long and short term operational planning activities, and for use in command generation processing. Performance monitoring data will be extracted from planning aid data sets, or generated separately; this data is provided to the EOC for use in verifying proper Spacecraft operation during real-time contact intervals. The FDF will operate seven days per week to generate predictive orbit data for use in daily command generation processing. The short-term planning aid data used in daily planning activities will be generated/updated TBD, while long term planning aid generation will be scheduled to support specific long term planning activities whenever they occur.

4.2.3 NASA Communication Network (NASCOM)

Together with the EOS Communications Network (ECOM) (Section 4.2.6.2), NASCOM provides the set of circuits, switching, and terminal facilities for operational telecommunications support of the EOS project. Both networks provide a high level of security for the command, telemetry, and other information directly related to the spacecraft operations that they support. NASCOM will provide the communications between the Earth Science Data Information System (ESDIS) and the NCC (and possibly other institutional systems), either directly or via ECOM gateways.

4.2.4 Science Support Networks

Other NASA networks that support EOS science communications include the Program Support Communications Network (PSCN) and the NASA Science Internet (NSI):

a. The PSCN provides programmatic and administrative data communication services between NASA Headquarters, NASA centers, and other users. The PSCN Control Center, located at Marshall Space Flight Center (MSFC), has overall responsibility for scheduling, software development, maintenance, and monitoring of the PSCN.

b. The NSI is a multi-discipline and multi-project network that is operated by the NSI Project Office at NASA's Ames Research Center (ARC). NSI provides data access and interchange among a wide variety of NASA science

disciplines. It will provide direct user access to several disciplines supported by ESDIS and gateways to other networks that will be part of the ESDIS Science Network (ESN).

4.2.5 Alternate Space/Ground Links

In the event that the Spacecraft is unable to communicate through TDRSS, NASA ground stations will link the Spacecraft with the EOC for housekeeping and health and safety data. The ground stations include the following:

a. Deep Space Network (DSN).
b. Ground Network (GN).
c. Wallops Orbital Tracking Station (WOTS).

4.2.6 Earth Observing System Data and Information System (EOSDIS)

The EOSDIS ground system consists of EDOS, ECOM, and ECS.

4.2.6.1 EOS Data and Operations System (EDOS)

EDOS is a component of the EOS Ground System which provides an interface between the White Sands Ground Terminals and other EOS Ground Systems like the EOC, ASTER Instrument Control Center (ICC), and the DAACs. The interface between EDOS and the DSN, and GN, and Direct Playback stations is TBD.

EDOS processes data which conforms to the CCSDS recommendations.

For telecommand services, EDOS provides an asynchronous interface with the EOC, while providing a synchronous interface with the White Sands Ground Terminal. EDOS receives CCSDS Command Link Transmission Units (CLTUs) from the EOC and provides the CCSDS protocol for transmission of the data to the White Sands Ground Terminals.

For telemetry services, EDOS provides several data processing functions:

a) For data requiring real-time transmission (i.e., real-time housekeeping data to the EOC), EDOS will extract packets from the S-band downlink and transmit the packets with a minimum of delay at the rate received. In addition, EDOS will provide a time tagging function which will allow for accurate spacecraft time determination.

b) EOS-AM data transmitted via the high-rate science link (i.e., the K-band link), will receive level zero production data processing at EDOS. Playback

data will be forward ordered if necessary, and data sets will be generate which contain time ordered packets (all with the same APID) with quality and accounting information appended. The size of the data sets generated will be predetermined, so one data set may contain data from one or more TDRSS contacts. Overlap between TDRSS contacts is eliminated where it occurs.

Level zero processed data sets will be available for delivery to destinations within 21 hours of receipt of all the required data.

c) Up to 5% of the total data generated by the spacecraft may receive quick-look processing at EDOS. Quick-look processing is a means of delivering science/engineering data to a destination within approximately one hour of its receipt at EDOS. Any data included in a quick-look processed data set will also be included in a routine level zero production processed data set. Quick-look processed data sets are limited to data received during a single TDRSS contact. The data in a quick-look processed data set may include all of the data associated with the specified APID received during the TDRSS session or only those packets for the specified APID that have a special secondary header flag set (quick look flag).

d) Another EDOS processing option is rate buffering. This option is intended to capture downlink data at a high data rate and deliver that data to a destination at a different, lower data rate with minimal processing delays. Rate buffered data sets are files of packets for a single APID with limited quality and accounting information appended.

EDOS will provide an interface to the EOC, ICC, and DAACs for realtime spacecraft monitoring, data accounting, fault isolation, and configuration management.

4.2.6.2 EOS Communication Network (ECOM)

ECOM is a facility system that supplies supporting services to EOSDIS. ECOM provides the set of circuits, switching, and terminal facilities for operational telecommunications support specific to the EOS project. Together with NASCOM, ECOM provides a high level of security for the command, telemetry, and other information directly related to the Spacecraft operations. ECOM will provide the data transport path from the EDOS elements to various other elements of EOSDIS, including the EOC and ASTER ICC. ECOM supports a variety of bandwidths and uses state-of-the art communications methods, including fiber optics and domestic communications satellites.

4.2.6.3 EOSDIS Core System (ECS)

ECS has the following three segments:

a. The Flight Operations Segment.
b. The Science Data Processing Segment.
c. The Communication and System Management Segment.

4.2.6.3.1 Flight Operations Segment (FOS)

The FOS manages and controls the EOS-AM Spacecraft and its instruments.

The FOS comprises the following three basic elements:

a. The EOS Operations Center (EOC)

The EOC facility serves as the focal point for EOS-AM Spacecraft real-time flight operations. The EOC will be located at GSFC. Figure 25 shows the EOC staffing structure and relationships with other EOS-AM Project related entities.

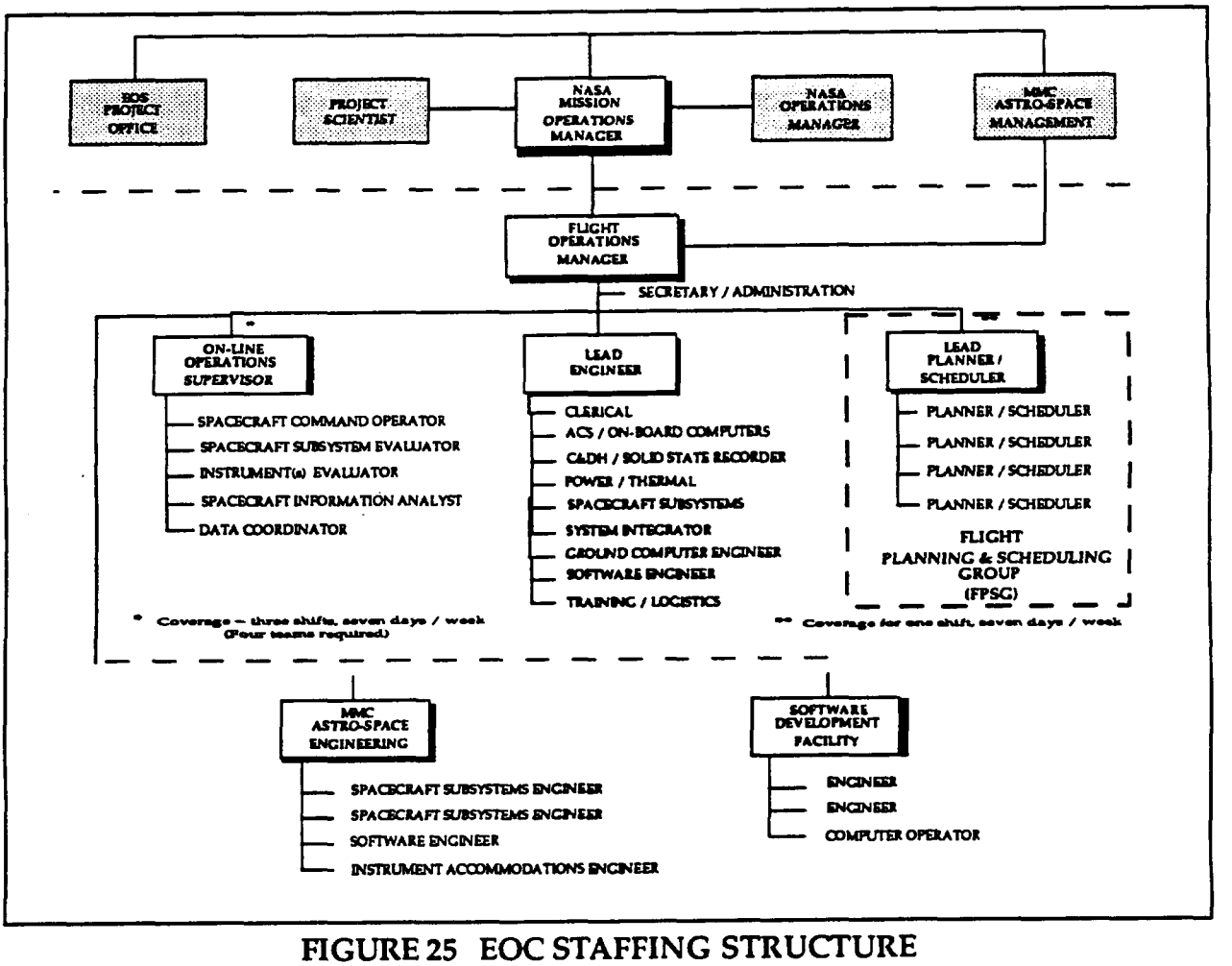

FIGURE 25 EOC STAFFING STRUCTURE

The flight operations elements responsible for the health and safety of the Spacecraft are located at the EOC. The Flight Operations Team (FOT) performs the detailed flight operations planning and scheduling, command, control, and real-time monitoring of the Spacecraft. The spacecraft sustaining engineering group, located at the EOC, is responsible for detailed Spacecraft performance analysis and produces periodic spacecraft subsystem performance reports. Housekeeping, engineering, and instrument quick-look processed science data are also analyzed to support flight operations and to support Spacecraft and instrument engineering.

The FOT will coordinate CERES operations with the Spacecraft and other instruments. Working with the CERES PI via the Instrument Support Terminal(s), the FOT plans and schedules the CERES and Spacecraft operations.

The EOS-AM spacecraft contractor provides a spacecraft simulator, which is a hybrid of the Spacecraft Bus Command and Data Handling (C&DH) subsystem and special simulation software. This simulator supports ground tests, training, and flight software maintenance and will be located at the EOC.

Specific EOC command and telemetry database requirements for the CERES instrument are defined in Appendix II and Appendix III, respectively.

Specific requirements for EOC computer processing of CERES telemetry data are defined in Appendix III.

Specific requirements for CERES uplink transmissions are defined in Appendix II, while CERES uplink verification requirements are included within Appendix III.

b. The Instrument Control Center (ICC)

There is no ICC for CERES.

c. Instrument Support Terminal (IST)

An IST is a software toolkit hosted on the CERES Principal Investigator (PI) workstation. The CERES IST workstation provides access to EOC based information and functions. It also provides for the exchange of data between the EOC and other instrument support systems at PI/TL or instrument team locations.

One or more ISTs (TBD) may be available to enable the CERES PI to participate in the planning, scheduling, commanding, and monitoring of the CERES instruments. The procedures for these interfaces are TBD and will be furnished by the ECS contractor.Figure 26 shows the CERES IST user perspective.

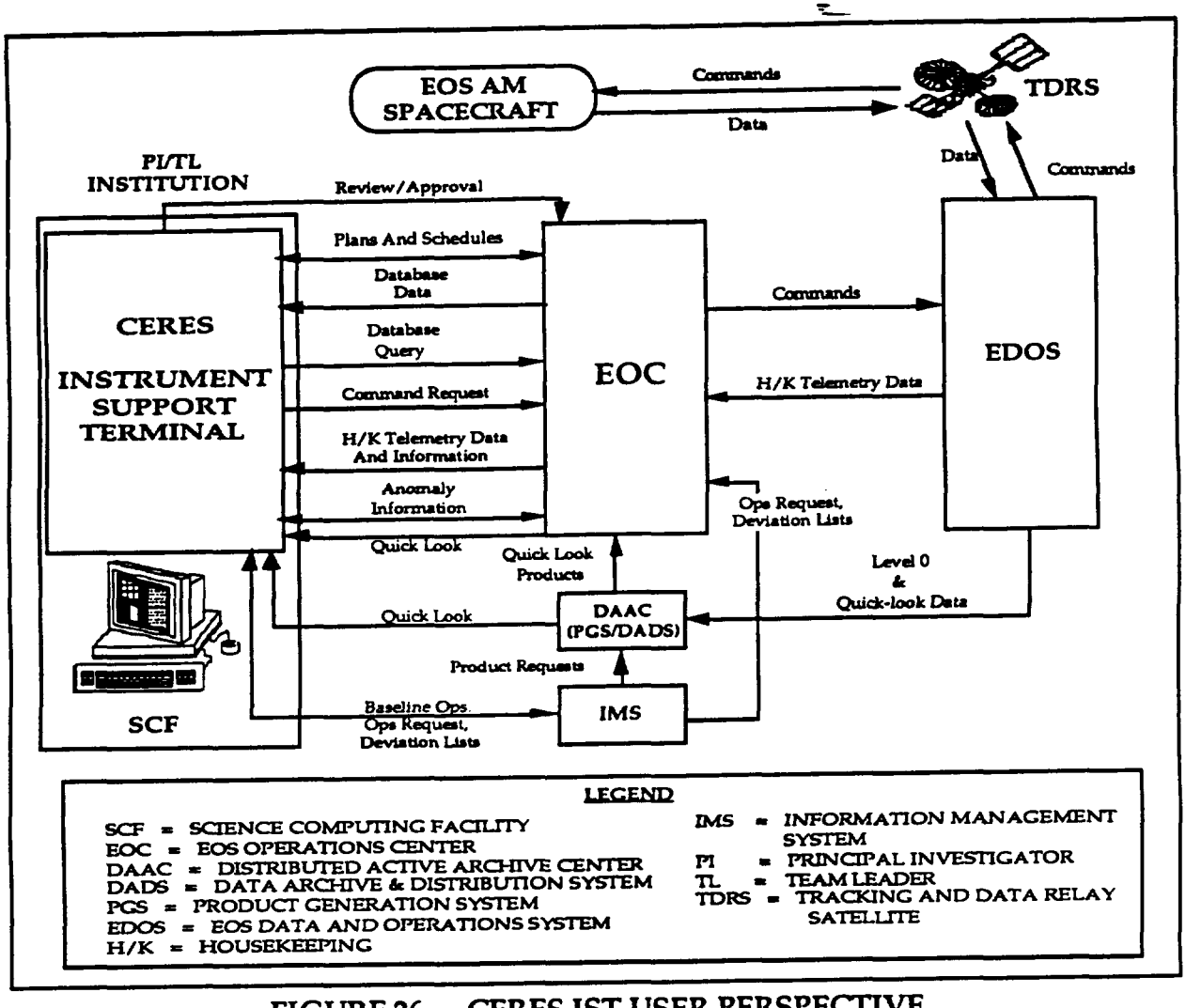

FIGURE 26 CERES IST USER PERSPECTIVE

The CERES IST will provide for the exchange of data with the EOC. Other instrument support systems at the CERES PI location (e.g., for transfer of instrument microprocessor loads and dumps) will also utilize the IST. Different authorized individuals may use the IST to perform different functions in support of the CERES instruments operations (e.g., some IST users may support planning and scheduling; others, anomaly resolution).

During the ECS development phase, the PI and the Earth Science Data

Information System (ESDIS) project will negotiate the allocation of instrument operations functions to the CERES IST.

The ISTs will run on a wide range of computer platforms that conform to industry standards. The CERES PI is responsible for ensuring that the hardware that hosts the IST meets these standards and for integrating the toolkit with the hardware and other PI applications.

4.2.6.3.2 Science Data Processing Segment (SDPS)

The SDPS provides processing and distribution for science data and a data information system for EOSDIS. It consists of the following three kinds of elements:

a. The Distributed Active Archive Centers (DAACs) -- The DAACs will process data from the instruments to standard level 1-4 products, provide short- and long-term storage for EOS and selected non-EOS data, and distribute the data to users. Each is composed of a Product Generation System (PGS), a Data Archive and Distribution System (DADS), and a portion of the distributed Information Management System. Several DAACs will be distributed around the United States.

b. The Information Management System (IMS) -- The IMS is a distributed data and information management service that includes a catalog system in support of user data selection and ordering. The IMS will be distributed but will function as a single integrated information and data management service from the point of view of the user. The IMS must therefore present the same comprehensive view of the EOSDIS from any IMS access node.

c. The Science Computing Facilities (SCFs) -- SCFs are located at science investigator sites and will be used to develop and maintain algorithms, produce data sets, validate data and data products, and analyze and synthesize EOS and other data to expand knowledge about the Earth system and its components.

The SDPS performs the EOSDIS functions of processing and archiving data from the EOS instruments and data from other earth science projects.

4.2.6.3.3 Communication and System Management Segment (CSMS)

The CSMS provides communications, networking, system-wide network management, and site/element operations management. This segment contains the following two elements:

a. The System Management Center (SMC) -- A system management service for EOSDIS ground system resources.

b. The EOSDIS Science Network (ESN) -- A communications network and services providing for the electronic distribution of data among the DAACs, SCFs, and other related science facilities.

The CSMS performs the EOSDIS functions of providing access to and distribution of EOS data products, networking capabilities, and the exchange of items such as data and algorithms.

5 FUNCTIONAL RESPONSIBILITY ALLOCATIONS

The allocations of responsibility for performing various operational functions in support of CERES flight operations are understood to be as follows:

5.1 Planning and Scheduling

Planning and scheduling has the objective of producing a detailed schedule for the activities of the EOS-AM Spacecraft (Spacecraft Bus and AM Instrument Set). The Flight Planning and Scheduling Group (FPSG), a segment of the Flight Operations Team (FOT), is responsible for producing the integrated Spacecraft detailed activity schedule.

The planning and scheduling process includes the following three steps:

a. **A long-term mission planning phase.**
Long-term mission planning for the Spacecraft begins up to 5 years before the activities being planned and produces or updates the Long-Term Science Plan (LTSP) and Long-Term Instrument Plans (LTIPs).

b. **An initial scheduling phase.**
Initial scheduling, whose primary objective is to secure the SN resources for flight operations for the target week, begins about 3 weeks before the target week and uses baseline activity profiles, activity lists and/or activity deviation lists.

c. **A final scheduling phase.**
Final scheduling, which begins after the instrument and Spacecraft subsystem activity lists are generated, produces a detailed activity schedule for the Spacecraft Bus and the instruments. This schedule forms a basis for commanding the Spacecraft.

The science community and the FOT will integrate science and Spacecraft information in the planning and scheduling process.

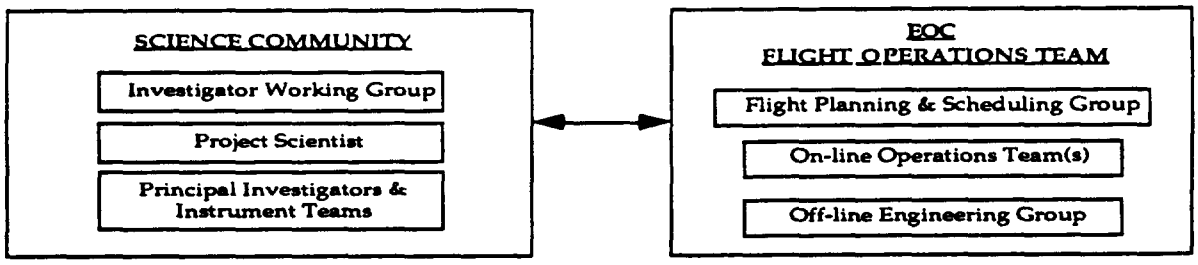

5.1.1 Long Term Planning

The project scientist produces, with the Investigator Working Group (IWG) recommendations, a long term science plan (LTSP) for the Spacecraft. The PIs/TLs produce long term instrument plans (LTIPs) for their respective instruments. The FOT uses these long-term plans to develop a long-term Spacecraft operations plan.

The IWG defines policy, guidelines, and overall science objectives for the Spacecraft. The IWG has representatives from each of the instruments. The IWG meets regularly, at least every 6 months (usually every three months). The LTSP presents science objectives for the Spacecraft establishes science mission priorities to be used in later scheduling, and recommends approaches for satisfying scientific objectives. The LTSP also defines special events and specifies requirements for coordination between instruments.

The CERES PI has responsibility for the CERES LTIP. The CERES LTIP also contains planned routine background operations for ongoing observations or operations that are related to routine calibration and maintenance activities.

The FPSG has the responsibility for Spacecraft planning. Some of the Spacecraft Bus subsystem activities that the FPSG manages are directly related to science and to Spacecraft Bus subsystem operations; these include the power, command and data handling, and communications subsystems. Others support Spacecraft maintenance, including battery management and orbit maintenance. The FPSG formulates long-term spacecraft operations plans and keeps the WIG and the CERES PI informed of changes in Spacecraft operations, including predicted frequencies in which science operations are affected for maintenance.

5.1.2 Initial Scheduling

Initial scheduling has the objectives of securing the required SN resources from the NCC. The FPSG identifies the SN resources required for Spacecraft Bus subsystem operations (e.g., TONS operations, orbit adjustment operations). Based on the baseline activity profiles, instrument activity lists, and activity deviation lists (if any) for the instruments, and the SN resource needs for the Spacecraft Bus subsystems, the EOC estimates on-board Solid State Recorder usage and SN resource needs and develops a TDRSS schedule request. The FPSG sends the schedule request to the NCC and negotiates with the NCC as necessary to secure the best possible SN resource allocations.

On the basis of the TDRSS schedule, the Spacecraft Bus activities required and instrument activities, the FPSG develops a preliminary Spacecraft activity schedule, which it makes available to all instruments. The CERES PI will have access to available scheduling information via the IST. This global information includes the

plans (e.g., LTSP, LTIPs, and long-term Spacecraft operations plan), orbit information (e.g., scheduling aids from the FDF), a TDRSS schedule for the target week, and the most current preliminary Spacecraft activity schedule.

The CERES PI expresses changes of scheduling needs with operations requests, which contain activity deviation lists, and provides them to the FPSG. The CERES PI will acknowledge the "no change to operating instructions" by the use of TBD provided to the FPSG on a TBD schedule.

The Spacecraft Bus subsystems will undergo initial scheduling. From the long-term Spacecraft operations plan, the FPSG identifies the activities that the subsystems must perform during the target week. Based on these activities, the FPSG generates an initial activity profile. The FPSG uses the activity profile to identify the Spacecraft Bus subsystems' SN resource needs.

After validation of the activity profile, the FPSG generates a TDRSS schedule request and sends it to the NCC, about 2 weeks before the target week. For about a week after the submission of this TDRSS schedule request, the FPSG can negotiate with the NCC for the best SN resource allocations. A week before the target week, the NCC provides the active TDRSS schedule to the FPSG. Based on the TDRSS schedule and other resource profiles, the FPSG builds a preliminary Spacecraft activity schedule for the target week.

5.1.3 Daily Planning and Scheduling

The FPSG is responsible for overall coordination of daily Spacecraft operations planning and scheduling activities. The CERES PI is responsible for reviewing the daily Spacecraft operations plan.

Final scheduling has the objective of producing for the Spacecraft a detailed activity schedule on which commanding will be based. Final scheduling is based on the preliminary activity schedule and any new input that has been accepted since the preliminary activity schedule was developed.

The FPSG combines the activity deviation lists, if any, with the corresponding baseline activity profiles to produce instrument activity lists. The FPSG develops the Spacecraft subsystem activity lists. Based on the instrument and Spacecraft subsystem activity lists the FPSG, using EOC resources, generates a detailed activity schedule for the Spacecraft. The FPSG can normally perform final scheduling without any input from the CERES IST.

As in initial scheduling, the CERES PI can access scheduling information using the IST.

Scheduling conflict resolution is TBD.

5.1.4 Planning Aids

Planning aids which pertain to long-term and daily flight planning activities will be generated by the EOSDIS and FDF, and will be available to the CERES PI.

The planning aid access details are TBD and are the responsibility of the EOSDIS Core Systems contractor.

5.2 Uplink Generation

The uplink generation process translates the Spacecraft detailed activity schedule, instrument microprocessor loads, and other information to be stored into Spacecraft command loads ready for uplink transmission. This process will be performed using TBD procedures. The CERES PI is responsible for generating all CERES control sequences which are used to implement planned instrument operations. The FPSG is responsible for generating control sequences which are used to implement planned Spacecraft Bus operations. The CERES PI is responsible for ensuring that the CERES commands in the command database are current and correct.

The CERES PI is responsible for defining CERES constraint checks, constraint violation resolution ground rules, and for performing checks on CERES microprocessor load sequences. Specific constraint check requirements for the CERES instrument are defined in Appendix II.

The FPSG is responsible for coordinating the processing of Spacecraft and instrument operating schedules into uplink loads. The primary point of contact between the CERES PI and the Flight Operations Team is TBD.

Spacecraft commanding (real-time uplink commands, realtime microprocessor loads to the instruments, real-time commands to the SCC, and stored SCC commands) has the purpose of directing the spacecraft and instruments to perform the activities as scheduled or as needed. This function has the following three major activities:

a. Normal commanding, which implements the Spacecraft Bus and instrument activities that have been specified in the Spacecraft detailed activity schedule.

b. Implementation of late changes to the scheduled course of activities as necessitated by late changes to the Spacecraft detailed activity schedule.

c. Emergency/contingency commanding required for safe operations of the Spacecraft Bus and instruments.

Command associated activities also involve command data validation, command verification, onboard memory management, and command history maintenance.

Stored SCC commands generated for CERES are typically composed of absolute time commands. An absolute time command has associated with it a well-defined execution time.

The assignment of command related responsibilities for CERES to the PI and the FOT are TBD. The FOT will uplink commands for CERES as specified by TBD approved plans and activities.

The FOT is responsible for uplinking scheduled CERES command loads. The PI may also request the FOT to initiate real-time commands. The FOT is responsible for generating, validating, and maintaining the command data for the Spacecraft Bus subsystems. The SCC software is the responsibility of the Spacecraft Bus contractor. The FDF provides the FPSG with required parameters for TONS operations and orbit adjustment operations. The FPSG incorporates the appropriate parameters into SCC-stored commands and SCC-stored Spacecraft tables.

5.3 Real-Time Operations

The Flight Operations Team is responsible for all aspects of real-time contact with the Spacecraft. The ECS contractor, using EOC resources, is responsible for processing real-time telemetry data to:

a. Determine the status of various Spacecraft systems.
b. Monitor the health and safety of Spacecraft Bus subsystems and each EOS AM instrument.
c. Generate displays for use by the FOT.

The EOSDIS Core System contractor is responsible for IST display generation. The method and implementation is TBD.

The FOT is also responsible for generating and transmitting all real-time commands, for transmitting the stored command loads, and for verifying all uplink transmissions. Specific uplink verification requirements for the CERES instrument are defined in Appendix III.

The FOT is responsible for implementing the daily Spacecraft operations schedule under normal circumstances, and for taking appropriate action to preserve Spacecraft health and safety. The CERES PI is responsible for defining health and safety monitoring and reaction procedures for the CERES instrument, and the Flight Operations Team is responsible for implementing these procedures. Specific CERES health and safety monitoring and action requirements are defined in Appendix III and Appendix IV, respectively.

The CERES PI is also responsible for advising the FOT of any changes in CERES operating characteristics, capability, or in plans for CERES utilization which should be factored into any aspect of real-time operations. The FOT is responsible for advising the CERES PI (directly, or indirectly via the FPSG) of any departure from planned operation of the CERES instrument.

5.4 Performance Verification

Verification of operational performance is required for all Spacecraft Bus subsystems and the CERES instruments in order to maintain an up-to-date knowledge of Spacecraft operating characteristics, capabilities, and limitations. Performance

verification results will be used in science data analysis/evaluation and as an input to ongoing science and operational planning activities. The CERES PI is responsible for verifying all aspects of CERES instrument performance, and the FOT is responsible for verifying the performance of Spacecraft Bus subsystems throughout the Spacecraft mission. The Software Development Facility (SDF), at the Spacecraft contractor's facility, will support the FOT in verifying Spacecraft Bus flight software performance relating to on-board operation. The CERES PI is responsible for CERES performance verification requirements. The FOT and CERES PI are both responsible for advising the EOS-AM Science Team all/any performance verification results which are pertinent to the planning of future mission operations.

The FOT is responsible for maintaining a log of all uplink activities, which includes for each uplink activity the command data uplinked, the start and end times, and its receipt by the C&DH. The FOT, using EOC resources, also maintains information on whether stored command data are correctly stored in the SCC memory and information on whether the SCC-stored commands are dispatched successfully to the intended destination entities. For real-time commands, the FOT maintains information regarding command execution by the Spacecraft Bus subsystems. The FOT will verify CERES microprocessor loads via checksum or TBD method.

Similarly, the CERES PI is responsible for maintaining information on whether the stored or real-time instrument commands are successfully executed by the CERES instruments (Details are TBD). The CERES PI is also responsible for maintaining information on whether the instrument microprocessor loads are correctly loaded and executed (Details are TBD).

Command histories will be maintained by the FOT and CERES PI.

5.5 Database and Software Maintenance

The Spacecraft SCC and CERES instrument microprocessors will contain software

and database information which are subject to in-orbit maintenance. The EOC computer systems will contain a database which supports command generation, telemetry processing operations, and all ground system elements will contain software subject to maintenance. The configuration of each software system and database will be controlled with update procedures coordinated to maintain consistency between the EOS-AM Spacecraft and ground system and between various ground system facilities.

The ECS contractor will have overall responsibility for coordinating software and database maintenance activities to insure system-wide consistency. The Software Development Facility (SDF) will have responsibility for the Spacecraft Bus flight software.

The ECS contractor is responsible for defining and verifying variable-parameter modifications for the allocation of command storage memory within the SCC, and for implementing SCC flight software and database modifications. The CERES PI is responsible for maintaining all CERES instrument microprocessor software and database contents for CERES.

The ECS contractor is responsible for maintaining all Spacecraft Bus subsystem parameters within each ground system database and for maintaining the core definitions of all individual commands within the EOC systems. The ECS contractor is also responsible for maintaining the core definition of all downlink telemetry functions within the EOC database for which EOC processing of any type is required. The CERES PI is responsible for providing to the EOC the parameter values which define all CERES commands and telemetry functions (e.g., serial magnitude commands having specific bit patterns or variable sub-fields; telemetry functions contained within an instrument-controlled format structure). The CERES PI is responsible for defining all other ground system database information updates which relate to the CERES instrument (i.e., command sequences, constraints, verification procedures; activity definitions; telemetry calibration data, limit-check threshold levels, derived function definitions, display formats).

The ESDIS Project is responsible for the maintenance of Code 500-supplied ground system software, and the EOSDIS Core System contractor for implementing the associated database modifications. The FOT is required to remain cognizant of database content and status within the EOC. The ECS contractor will interact with the CERES PI to implement any database updates which are pertinent to the CERES instruments. The ECS contractor will provide the database manager software for the EOC database.

5.6 Early Orbit Operations

The early orbit operations responsibility for performing various operational functions in support of CERES flight operations are understood to be as follows:

5.6.1 Launch - Orbit Acquisition Mission Phases

The CERES PI is responsible for defining any command sequences, EOC displays, and contingency procedures which should be available during launch through the Orbit Acquisition mission phase operations in order to assure the health and safety of the CERES instruments. Specific CERES requirements for pre-activation attention are defined in Appendix IV.

The launch vehicle places the Spacecraft in the injection orbit; and the Spacecraft will sense separation (Spacecraft from launch vehicle). Data will be relayed from the Advanced Range Instrumented Aircraft (ARIA) to the EOS Operations Center. Figure 27 shows the Launch / Ascent phase timeline.

The Flight Operations Team will be responsible for the following activities:

a. Monitor Spacecraft Bus housekeeping telemetry (Launch / Ascent specific display sets).

b. Monitor and verify Spacecraft Bus operating mode.

c. Monitor and verify Spacecraft Bus resources.

d. Verify stored commands execution.

e. Spacecraft scheduling and planning.

During the Orbit Acquisition Initialization phase, a positive Spacecraft energy balance and an S-Band communications link is established. A stable earth-oriented attitude is attained and an onboard orbit estimate is obtained.

The Flight Operations Team will be prepared to take command and control of the Spacecraft and are responsible for the following activities:

a. Monitor Spacecraft Bus housekeeping telemetry (phase specific display sets).

b. Monitor and verify Spacecraft Bus operating mode.

c. Monitor and verify Spacecraft Bus resources.

d. Verify stored commands execution.

e. Verify Earth acquisition.

f. Verify Solar Array deployment and solar tracking.

g. Verify High Gain Antenna deployment.

h. Verify command and control capability.

TIMELINE TIME REFERENCE

500 km Perigee Injection Orbit

LAUNCH (MINUTES)

L-TBD	L-TBD	L	L+3	L+4	L+15

GO TO INTERNAL POWER (MINUTES)

G	G+TBD	G+5	G+8	G+9	G+20	G+20	G+21	G+22.5	G+37.5	G+39	G+47	G+69.5	G+82	G+82	G+118	G+TBD	G+TBD	G+TBD	G+TBD	G+267

SEPARATION (MINUTES)

S	S	S+1	S+2.5	S+17.5	S+19	S+27	S+49.5	S+62	S+62	S+98	S+TBD	S+TBD	S+TBD	S+TBD	S+247

EVENT

- Go to Internal Power
- Disconnect T-0 Umbilical
- Ignite Stage 0 and Liftoff (L)
- Booster Engine Cutoff (BECO)
- Jettison Fairing
- Separate Launch Vehicle / Spacecraft - First Perigee
- Begin Rate Null (SCC Commands)
- Complete Rate Null
- Begin Solar Array Deployment
- Complete Solar Array Deployment
- Complete Earth Acquisition
- Enter first Eclipse
- Pass First Apogee
- Exit first Eclipse
- Solar Array begins to Track the Sun
- Pass second Perigee
- Activate HGA release mechanisms (SCC commands)
- HGA Deployment Complete
- HGA slew to Acquire sight to TDRSS (SCC Commands)
- S-Band link to TDRSS established through HGA
- First Delta-V Burn (third apogee earliest)

NOTE: This timeline was developed by the EOS System Engineering Group. Please note that it is preliminary and as definition of the Launch Vehicle System and sequence timing is developed, this timeline will be updated.

FIGURE 27 LAUNCH / ASCENT PHASE TIMELINE

During the Orbit Acquisition phase, the Spacecraft will perform a series of delta-V maneuvers (significant change in velocity vector). The FDF and FPSG will be responsible for calculating burn parameters, planning the delta-V maneuvers, calculating the required firings, scheduling, and performing the maneuvers. Figure 28 shows a timeline of the planned maneuvers. Figure 29 shows an activity flow.

The Flight Operations Team is responsible for the Spacecraft operation and the following activities:

a. Monitor Spacecraft Bus housekeeping telemetry.

b. Monitor and verify Spacecraft Bus operating mode.

c. Monitor and verify Spacecraft Bus resources.

d. Verify stored commands execution.

e. Coordinate the Flight Dynamics Facility Delta-V data inputs to the EOC.

f. Verify on-board High Rate Spacecraft Recorder status.

g. Real-time command and control.

h. Spacecraft scheduling and planning.

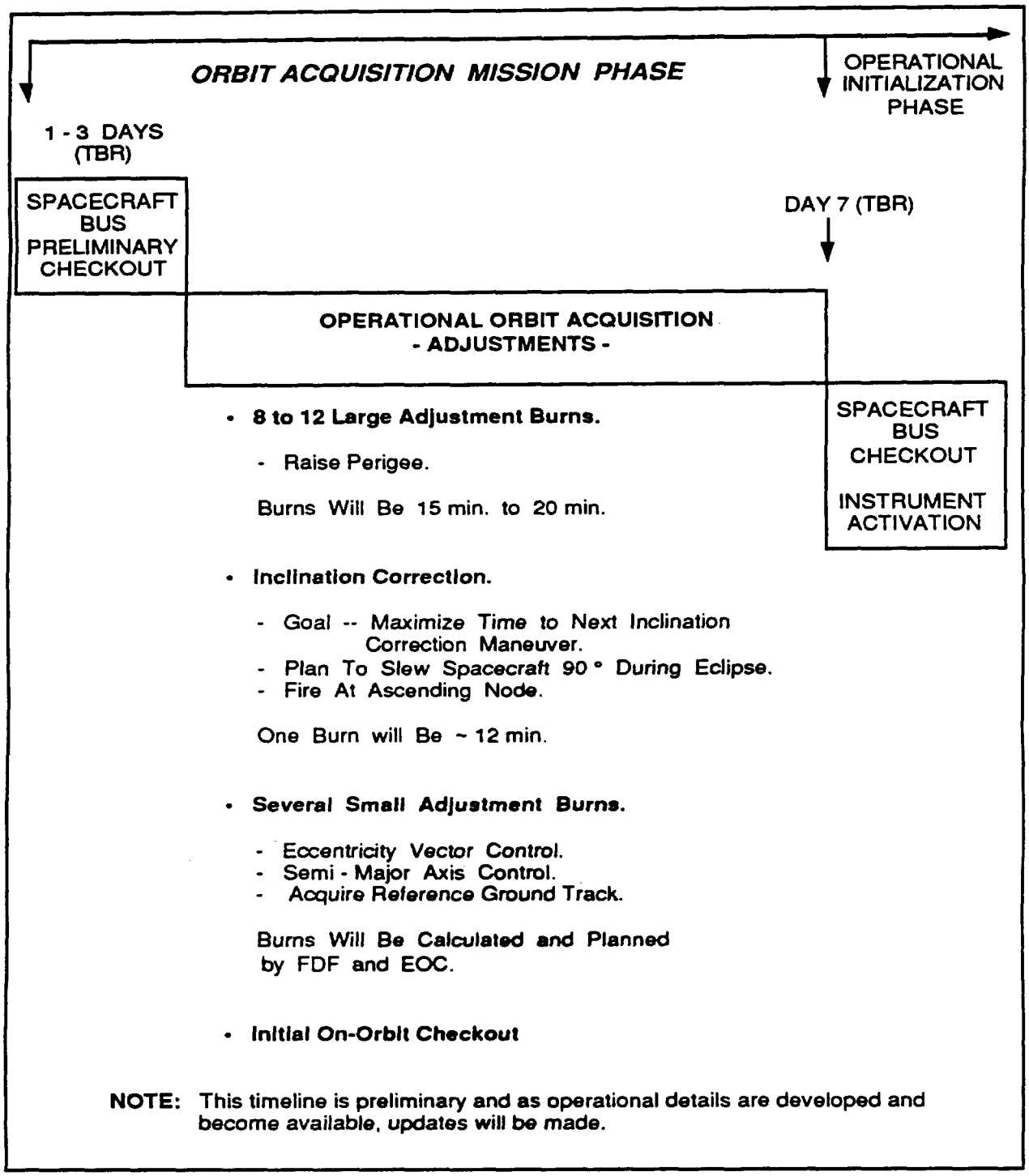

FIGURE 28 ORBIT ACQUISITION MISSION PHASE TIMELINE

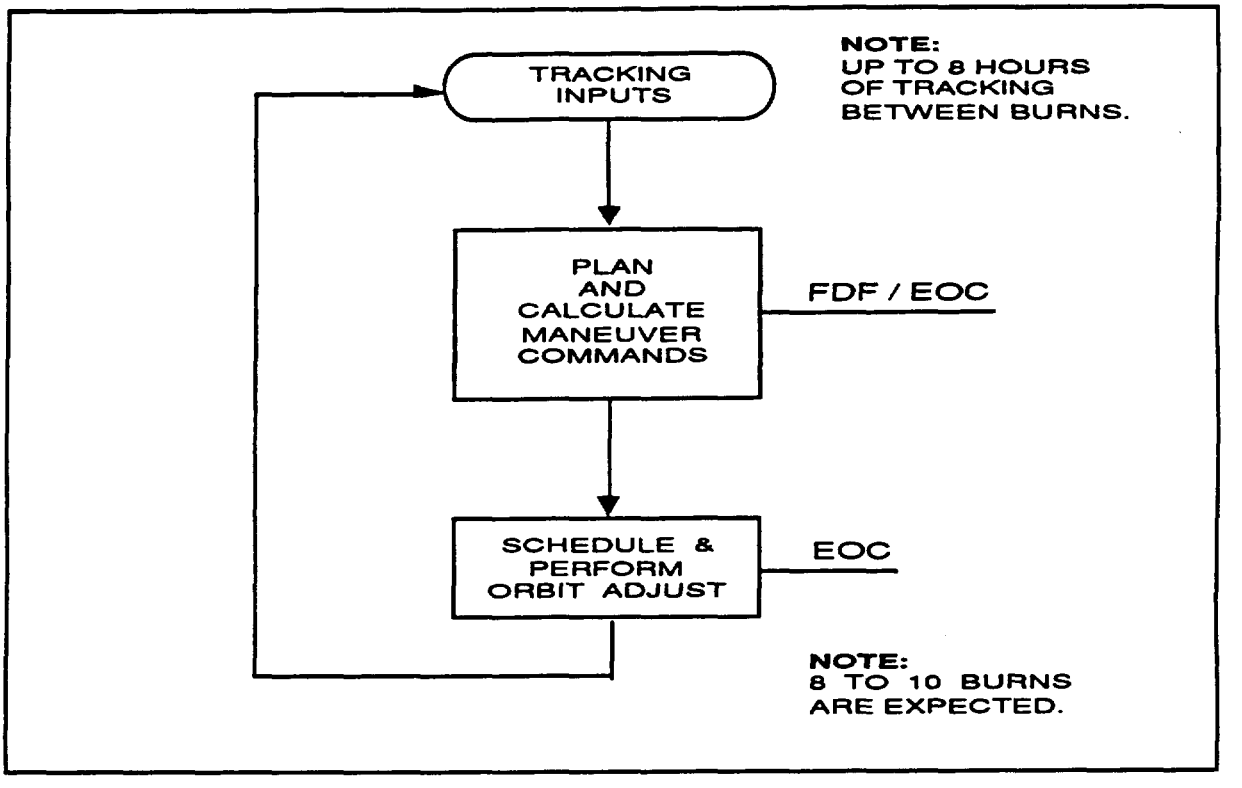

FIGURE 29 DELTA-V ACTIVITY FLOW

5.6.2 Activation

Spacecraft activation follows the launch through Orbit Acquisition phases, and leads into orbital mission operations. Most activation events will occur over a period of several weeks during the Operational Initialization phase. The CERES PI will be responsible for all CERES activation plans, and is expected to provide the CERES contribution to the initial Spacecraft activation plan. The FOT will be responsible for the Spacecraft Bus activation plans and procedures.

The CERES PI or designated representative(s) will be present in the EOC during each CERES activation event and will have direct responsibility for CERES activation procedures within the EOC. The FOT will support the CERES PI or designated representative(s) in implementing instrument activation procedures, and will coordinate initial CERES operations with other Spacecraft Bus and instrument activation events throughout this phase of operation. Specific requirements for FOT and CERES PI support are TBD. Activities during CERES instrument activation are defined in Appendix VI.

The Flight Operations Team will be responsible for the activation and checkout of the Spacecraft subsystems and the following activities:

a. Monitor Spacecraft Bus housekeeping telemetry.

b. Monitor and verify Spacecraft Bus operating mode.

c. Monitor and verify CERES instruments health and safety data.

d. Coordinate the CERES operations with the Instrument Team.

e. Monitor and verify Spacecraft Bus resources.

f. Spacecraft scheduling and planning.

g. Stored command table loads.

h. TDRS and EOS-AM Spacecraft ephemerides load.

i. Instrument microprocessor loads (if required TBS).

j. Memory dump verification (if required TBS).

k. Verify stored commands execution.

l. Coordinate the Flight Dynamics Facility data inputs to the EOC for required Delta-V operations and TDRSS On-board Navigation System (TONS).

m. Verify SSR status and management initialization (normal operation).

n. Spacecraft and Ground Systems operational phase readiness verification and turn-over to the Spacecraft mature operations.

5.6.3 Transition to Orbital Operations

After the EOS-AM Spacecraft Bus and instruments are fully activated, Spacecraft operations will transition into the Operational mission phase. When this occurs, the normal daily flight operations planning and scheduling process will begin along with normal ground system operations.

The FPSG will use the CERES baseline activity profile (provided before launch by the CERES PI), unless an operations request containing an activity deviation list is received from the CERES PI, to generate CERES instrument activity lists.

5.7 Spacecraft Maneuvers

Several types of maneuvers will be executed by the Spacecraft at predefined points throughout the EOS-AM mission. A nominal long-term schedule of maneuver events will be available prior to launch, and will be maintained current along with other long-term planning information. The EOS-AM Science Team will be responsible for factoring the maneuver schedule into the long term science plan, and for establishing overall compatibility between this schedule and planned science operations. The FOT will be responsible for maintaining maneuver schedule currency, and for notifying the EOS-AM Science Team (via the Project Scientist) of maneuver schedule changes.

The FOT has responsibility for all maneuver operations. The FOT and FDF are jointly responsible for the detailed planning of each Spacecraft maneuver and the FOT is responsible for maneuver execution. For orbit adjust maneuvers, the FDF is responsible for developing plans for corrective firings of the orbit adjust system and also is responsible for providing planning aid and operational data updates to reflect maneuver results. The FPSG will coordinate with the FDF to schedule specific maneuver events consistent with long term science plan intent and is responsible for scheduling instrument operations to accommodate maneuver implementation. The CERES PI is responsible for defining all maneuver accommodation requirements (including special command sequences, EOC displays, etc.) for the CERES instrument, for reviewing the maneuver operational plans, and for advising the FOT, as appropriate, of any concerns regarding these plans. Specific CERES requirements for Spacecraft maneuver accommodation actions are defined in Appendix IV.

5.8 Special Observations

The FOT is responsible for coordinating with the CERES PI regarding any special observation activities, such as TBD, which may affect the CERES instruments.

Specific CERES requirements for special observation actions are defined in Appendix IV.

5.9 Contingencies

In the event that a Spacecraft emergency situation develops, the FOT will be responsible for taking whatever action is appropriate to preserve Spacecraft health and safety. The GSFC Mission Operations and Data Systems Directorate is responsible for providing DSN/GN/WOTS resources if TDRSS service cannot be utilized (the FOT will request these resources, if necessary). The FOT will utilize emergency support, as available, to establish a safe Spacecraft configuration. First priority will be given to mission critical functions (i.e., communications, power, attitude control), and then to establishing a safe configuration for the EOS-AM instruments and other Spacecraft Bus subsystems.

The CERES PI is responsible for defining the safe/survival configuration(s) for the CERES instruments, and the command sequences necessary to establish that configuration. Specific CERES requirements for contingency actions are defined in Appendix IV.

If the Spacecraft enters Safe Mode or Survival Mode, the FOT is responsible for verifying/establishing a safe configuration for each instrument and Spacecraft Bus subsystem. The FOT will notify the CERES PI that the Safe Mode or Survival Mode has interrupted normal operation, and of resulting CERES instrument status. The CERES PI is responsible for advising the FOT of any need for further priority attention to the CERES instruments. The CERES PI is also responsible for defining any reactivation procedure to be followed in restoring normal instrument operation. The FOT will be responsible for implementing all Safe Mode or Survival Mode reaction and recovery operations. These actions will include:

a. Initiate the appropriate contingency procedure.

b. Recover and analyze stored housekeeping / health and safety data from the on-board data storage device (if possible).

c. Notify the CERES PI to coordinate actions that may have or will occur which relate to instrument operation.

d. Notify cognizant engineering and management personnel.

e. Request appropriate institutional support.

f. Analyze associated telemetry data available for problem isolation.

g. Initiate a corrective action plan if applicable.

h. Continue to monitor real-time telemetry if available, and log all events.

The FOT will notify the CERES PI in the event an instrument health or safety incident is discovered by the Flight Operations Team. The FOT will follow predefined instructions as prescribed by the CERES PI. The FOT will have available and maintain a set of "safing" commands provided by the PI. The CERES PI will be responsible for evaluating the incident and advising the FOT of instrument status and plans for resuming operations.

The FOT will be responsible for re-establishing the continuity of planned science operations, as defined in the Spacecraft activity schedule, once the Spacecraft has been returned to a normal operating configuration.

The CERES PI is responsible for defining all health and safety telemetry parameters and EOC monitoring criteria for the CERES instruments, and the procedures to be

followed by the FOT should a CERES health and safety incident occur. The FOT will be responsible for executing predefined monitoring and response procedures, consulting with the CERES PI regarding instrument status, and further response actions which might be appropriate. The FOT will advise the PI of CERES status regarding operational planning activities which are currently underway and the FOT is responsible for adjusting ongoing plans for CERES operation to accommodate the situation at hand (in coordination with the CERES PI). The CERES PI is responsible for defining command sequence, EOC procedure and any other modifications necessary to reflect changes in CERES operational capability or status whenever necessary throughout the EOS-AM mission.

6 INTERFACE EXCHANGE ITEMS

The CERES PI exchanges information electronically with the EOC and the Flight Operations Team by using the IST. The IST is connected to the EOC via the EOSDIS computer networks. These networks are available around the clock, supporting the exchange of information whenever it is required. The formats and forms for this information exchange is the responsibility of the ECS contractor and is TBD.

6.1 Planning and Scheduling

The CERES PI may access any planning and scheduling products in the EOC. This includes the long term plans, planning aids, the list of routine activities for the instrument, the list of deviations for the instrument, the TDRSS schedule for the Spacecraft, and the schedules for the other instruments and the Spacecraft Bus subsystems.

The planning aids consist of information derived from predicted orbit information and are identified in appendix 5.

The planning aids can display the information graphically or the information can be listed in tabular form. Details are TBD.

The list of routine instrument activities can be reviewed by the CERES PI using the IST. This list is the activities that the CERES instruments normally perform over its cycle (e.g., per orbit, per 16 day orbit cycle). It is initially defined prior to launch and should be changed infrequently. Modifications should be discussed with the Flight Planning and Scheduling Group (FPSG); modifications that impact the science data collected need to be coordinated with the IWG and the project scientist. Modifications to the instrument activity list are submitted via the IST to the FPSG for inclusion in the planning and scheduling database after the proper approval.

The CERES PI can submit and review the schedule of deviations from the normal activities. This schedule includes activities such as special calibrations and microprocessor loads. These deviations should be provided to the FPSG a week (TBR) in advance. Note that changes to the routine activities due to an instrument or Spacecraft problem are handled as exceptions to the plans and schedules. The schedule of activities and commands associated with recovering from an anomaly will typically be developed over shorter time frames than those for normal operations.

Quick look data, either housekeeping, instrument engineering, or science data, must be identified during the scheduling process so that the secondary header flag in the packet is set or the EDOS delivery orders for the delivery of the data from a TDRSS session can be modified. The CERES PI will submit requests for quick look data at least several days in advance to the flight planning and scheduling group using the IST.

6.2 Command Generation

Command generation includes real-time commands, SCC stored commands, and commands/loads for the CERES microprocessors.

The CERES PI provides the instrument microprocessor software and tables to the EOC for uplink, using the IST. Non-urgent information for uplink must be provided at least two days in advance. The IST is also used to send the EOC the command mnemonics required to implement any non-routine activity, such as the commands to recover from an anomalous situation. The IST/EOC procedures and protocols will insure that the transfer of information to be uplinked is authorized, complete, and consistent.

The CERES PI will be capable of using the IST to review and/or approve the command loads generated by the FOT in the EOC from the routine activity list and the requested deviations from normal operations. Planning, scheduling, and/or command products that must be approved by the CERES PI for routine and anomalous operations are TBD.

6.3 Real Time Operations

Using the IST, the CERES PI may monitor the instrument and Spacecraft housekeeping data as it is received in the EOC. The data may be displayed using any previously defined format that is in the operations data base. Formats for plots, alphanumeric information, and graphic formats will be available.

The CERES PI may monitor the commanding process via the IST. Status information will be available on which commands have been generated, which have been successfully uplinked, and which have been issued to the instrument. The verification that the instrument successfully executed the commands is the responsibility of the CERES PI. Exceptions are to TBD by the ECS contractor and the CERES PI.

6.4 Analysis

The CERES PI may use the IST to perform analysis on instrument and spacecraft data. The housekeeping data can be plotted versus time or versus other housekeeping parameters. Standard capabilities will include trend analysis, and minimum/maximum/mean statistics.

The following IST functions are provided for instrument engineering, quick look science data and other science analysis: TBD.

The analysis of health and safety data will be limited to that received by the EOC, and will include all real time housekeeping data and at least one orbit per day of a

complete orbits worth of housekeeping data from the onboard SSR. If the CERES PI needs housekeeping data from, a specific time of day, this must be requested in advance.

In addition to housekeeping data the CERES PI will be able to use the IST to access the EOC operations history log. This log contains a complete log of all significant activities in the EOC, including the schedule, command and command verification information, alarms and limit violations, and selected operator actions. About 7 days of operations history data will be kept in the EOC; older logs will be available from the GSFC DAAC. The IST will provide the tools to extract data from the operations history by time and type.

6.5. Operations Database

The CERES PI supplies the EOC with an operations data base prior to launch that contains the instrument telemetry formats, command formats, procedures, limits, constraints, and so on. The CERES PI may view this data base using the IST and may submit requests for changes to the data base. The data base will be under configuration control. The ECS contractor will be responsible for configuration control and the details are TBD.

Urgent requests can be handled more expeditiously (details are TBD).

6.6 Other Interface Exchange Items

The IST will provide an electronic mail capability to support the general communication between the CERES PI, other instrument teams, and the FOT personnel in the EOC.

The IST provides a file transfer capability for the exchange of bulk data such as microprocessor loads and dumps.

The CERES PI uses the IST to provide the EOC with periodic operations reports on the status of the CERES instruments. Integrated reports on the Spacecraft and instruments developed by the EOC will be available to the CERES PI via the IST.

7 JOINT OPERATING PROCEDURES

The interface procedures which will be followed in conducting CERES flight operations are understood to be as follows:

7.1 PI/EOC FOT Interface

The CERES PI and the Flight Operations Team (see Figure 30) will interface routinely regarding mission planning, uplink generation, and performance verification matters and will interface as required regarding real-time operations. The FOT and CERES PI will interface as appropriate regarding CERES instrument accommodations of Spacecraft maneuvers and contingency operations. The FPSG serves as the primary point of contact for the CERES PI regarding all EOC operations, and regarding all flight operations plans, planning aids, command generation inputs and outputs, and performance reports which are pertinent to the CERES instrument.

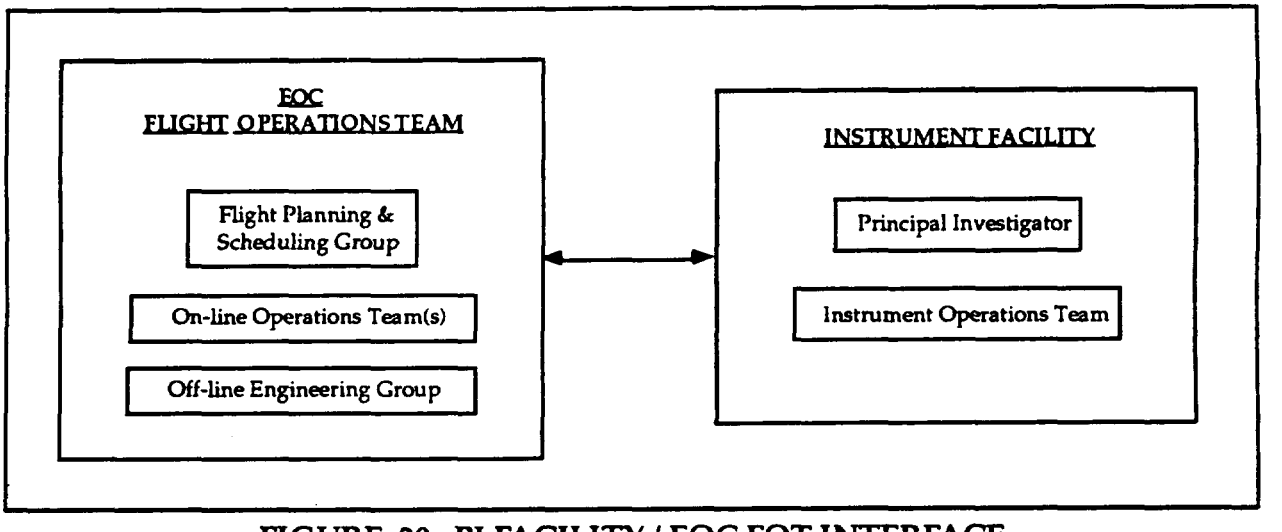

FIGURE 30 PI FACILITY / EOC FOT INTERFACE

7.1.1 Daily Operations Planning

Under normal circumstances, the CERES baseline activity profile will be used to develop the initial activity list 4-7 days before the corresponding operational period begins. The CERES PI will provide exceptions, activity deviation lists, in the event normal CERES baseline activities needs to be altered. The FPSG staff will coordinate all operations planning inputs, and will keep the CERES PI advised of the timetable for accessing plans to be reviewed, and for providing inputs and/or comments regarding these plans.

7.1.2 Command Generation

Command generation is performed by the FPSG using EOC resources. The FPSG serves as the point of contact for all review comments related to command generation processing.

7.1.3 Special Operations

The FPSG will notify the CERES PI whenever a Spacecraft maneuver operation is being planned, or whenever a special operation (TBR) or contingency operation which affects the CERES instruments occurs. The CERES PI will define CERES requirements for accommodating the special operation and/or for resuming normal operation when the special operation has concluded. Where real-time operation is a factor, the FOT will represent the CERES PI in coordinating implementation of appropriate real-time procedures. If a special operation disrupts planned operations (e.g., contingency situation), the FOT will advise the CERES PI of the disruption, and they will jointly define the procedure for restoring operational plan continuity.

7.1.4 EOC Database

The FPSG will manage the availability of operations plans, planning aids, and command generation processing inputs and outputs, and will coordinate with the CERES PI regarding access to this information. The CERES PI will generate all additions, deletions, and modifications to the EOC database for the CERES instrument, and will notify the FPSG of each submission. The FPSG will coordinate the database approval and update procedure required to incorporate each change, and will notify the CERES PI when the change has been incorporated. The CERES PI may then review the modified database, and will notify the FPSG of any discrepancy which requires corrective action. The format to be used is TBD and is the responsibility of the ECS contractor.

7.1.5 Microprocessor Load Verification

The FOT will transmit the CERES microprocessor loads and verify the loads via checksum (TBR). If verification beyond a checksum is required or a checksum capability is not provided, the CERES PI will verify that each microprocessor load transmitted to the instrument(s) is properly received and installed within microprocessor memory. When verification is prerequisite to instrument scheduling, the CERES PI will notify the FPSG staff of load verification. When real-time telemetry indications of microprocessor load acceptance are available, load verification feedback may be provided by the Flight Operations Team at the discretion of the CERES PI.

7.2 PI/EOC Command Management Function Interface

The CERES PI will interface with the EOC through the IST interface defined in TBD. The basic interface for information exchange will be via file transfer. The CERES PI has access to EOC resident information and processing capabilities (details are TBD).

The CERES PI will interface procedurally with the EOC as follows:

7.2.1 Operations Plans

In support of flight planning activities, the CERES PI can access EOC information via the IST. Any comments or proposed deviations to operational plans may be flagged (TBR) for the FPSG attention.

7.2.2 Planning Aids

Short term planning aid data will initially appear within the EOC TBD weeks beforehand, and will be updated at TBD intervals. Long term planning aids will be updated as requested by the EOS-AM Science Team (normally for each long term science plan update). Special planning aid data files may be assembled to contain only data of interest to the CERES PI and transferred to the CERES IST. Planning aid data will be updated within the EOC according to a (TBD) regular schedule.

7.2.3 Command Generation

Routine Spacecraft command generation processing will begin TBD hours before the operational period, and must be completed no later than TBD hours beforehand. The CERES PI will not interact directly with EOC Spacecraft command generation processing.

7.2.4 Performance Feedback

Observed performance of the CERES instrument will be documented in feedback reports which are transmitted in text form using the electronic mail capabilities of the EOC and IST interface. Routine and special reports are generated by the CERES PI at his IST, and are transferred to the EOC for posting. Performance reports will be filed and archived by the FPSG.

7.3 PI/FOT Interface

The CERES PI and the on-line operations team will interface to the extent that real-time operations are significant to the CERES PI, and as required to exchange instrument/Spacecraft Bus performance information or to supplement the routine interface between the CERES Principal Investigator and the FPSG.

The CERES PI will interface procedurally with the FOT as follows:

7.3.1 Real Time Operations

For real-time operations, the on-line operations team (TBD) is the point of contact for the CERES PI (TBR). In the event of an instrument anomaly, the CERES instrument operations team (TBD) will coordinate with the on-line operations team (TBD) for any actions required. The CERES instrument operations team (TBD) will contact the CERES PI as soon as possible to review the situation and to define any follow-up activities required.

7.3.2 Special Operations

The normal interface for handling maneuver accommodation, contingency adjustments, and departures from planned operations involves the CERES PI and the FPSG. The on-line operations team may, however, become involved in these matters in lieu of the FPSG staff during non-working hours, especially under time-critical circumstances. In such a case, the on-line operations team will handle immediate concerns, with the FPSG staff handling longer-term and follow-through aspects.

7.3.4 Initial Operations

During initial CERES activation, the CERES PI or delegate at the GSFC EOC will work directly with the FOT. Flight planning and scheduling personnel will interface with the CERES PI to perform the CERES planning and scheduling functions.

7.3.5 Performance Verification

The CERES PI and FOT may exchange performance information regarding instrument and/or Spacecraft operation in order to fully evaluate observed performance and capability. A Spacecraft engineer from the FOT will serve as the point of contact for Spacecraft performance verification inquiries.

7.4 PI/DAAC Interface

The CERES PI will interface with the DAAC via DAAC toolkits (that are co-operable with the IST toolkit). DAAC toolkit details are TBD. The data processing interface between IST(s) and the DAAC will also be utilized for flight operations functions.

Details are TBD.

7.5 PI Access to Telemetry

The following guidelines define access to telemetry data for the CERES PI:

a. Telemetry data will be recorded continuously throughout the EOS-AM

   mission by the on-board High Rate Spacecraft Recorder. Data retrieval will be obtained TBD per orbit.

b. Telemetry data will be acquired in real-time for approximately 20 minutes of each orbit.

c. The on-line operations team will monitor all real-time contact intervals and the telemetry data acquired will be processed in real-time. The EOC computer will perform defined status determination, event detection and limit-check processing, and will generate displays containing telemetry data and processing results.

8 IMPLEMENTATION AGREEMENTS

The following paragraphs describe the plans for implementing the data input to the operational system to support CERES flight operations.

8.1 Flight Operations Database

The basic flight operations database will be provided by the Spacecraft contractor. Database conversion, to the EOC system, will be the responsibility of the EOSDIS Core System contractor. This database, containing commands, telemetry, and limits, will be used for in-orbit flight operations.

8.1.1 Commands

Instrument commands will be placed in the EOC database. The database will contain command capabilities identified by the CERES PI, with support from the FOT and Spacecraft subsystem engineers. All flight operational commanding required will be tested and demonstrated during Spacecraft Integration and Test. The EOC command categories are TBD.

8.1.2 Instrument Telemetry

The CERES PI, with support from the FOT and Spacecraft subsystem engineers, will identify telemetry point definitions required for flight operations and ensure their telemetry points have been defined and tested/demonstrated during Spacecraft Integration and Test.

8.1.3 Instrument Limits

The CERES PI, with support from FOT and Spacecraft subsystem engineers, will ensure that the Spacecraft integration and test limit definitions are correct for in-orbit flight operations. If not, new limits will have to be defined and the ECS contractor will coordinate (Project approval and entry) the change to the EOC database.

The CERES PI with support from the FOT and Spacecraft subsystem engineers will identify the specific reactions to be taken during all out-of-limit conditions (i.e. Red, Yellow, and Delta limits). The FOT will document all out-of-limit reactions in the TBD Plan.

8.1.4 Database Approval

The CERES PI and Spacecraft subsystem engineers will access the database via IST to review their appropriate section(s). Changes to the database will be submitted via IST mail. The PI and Spacecraft subsystem engineer will check the database to ensure that the data is functionally and syntactically correct. After all of the database information for their subsystem has been approved, the CERES PI will sign off on his portion of the EOC database.

8.2 Operational Displays

The CERES PI, with support from the FOT and Spacecraft subsystem engineer, will identify which displays are needed for in-orbit flight operations. Any displays deemed necessary will be defined by the CERES PI and once approved, will be entered or converted by the EOSDIS Core System contractor. The CERES PI with support from the Spacecraft subsystem engineers, will assist the FOT with any conversion problems (i.e. mnemonics, values, etc.). The mechanism for defining pages and transferring Spacecraft integration and test pages to the EOC is TBD.

8.3 Operations Procedures

The CERES PI, with support from the FOT and Spacecraft subsystem engineers, will establish what operational procedures are needed for in-orbit flight operations. The CERES PI should keep in mind that I & T building blocks may have to be assembled into contiguous functional activities that are of reasonable duration harmonious with the in-orbit operational contacts. The FOT will review all completed operational procedures for compatibility with flight operations such as procedure duration, logical break points, etc.

8.3.1 EOC Definition

The FOT will furnish to the CERES PI a description of the EOC operations procedures. In addition, the FOT will be available to answer questions regarding EOC operations during operations procedure development.

8.3.2 I&T Procedures to EOC Operations Procedures Conversion

The conversion of procedures to the EOC will be the responsibility of the EOSDIS Core System contractor and is TBD.

8.3.3 I&T Databases to EOC Operations Databases Conversion

The conversion of databases to the EOC will be the responsibility of the EOSDIS Core System contractor and is TBD.

8.3.4 Flight Unique Procedures

The CERES PI, with support from the FOT and Spacecraft subsystem engineers, will identify any CERES instrument unique flight operations procedures. These procedures will be created by the CERES PI with support from the Spacecraft subsystem engineers and submitted to the FOT.

8.3.5 Procedure Submittal

The CERES generated operations procedures will be submitted to the FOT by one of the following methods: TBD

Procedure entry, after approval, into the operational system will be the responsibility of the EOSDIS Core System contractor and is TBD.

8.3.6 Approved EOC Procedures

Once the procedures have been reviewed and approved, they cannot be changed without the NASA Mission Operations Manager's (MOM) approval.

8.3.7 Procedure Verification

The FOT will review all operations procedures to verify the accuracy of the directives and also the logic to the extent possible. The CERES PI with support from the FOT and Spacecraft subsystem engineers will identify operations procedures that require execution for verification. Prior to launch, the FOT will conduct a scheduled verification of operations procedures that will include EOC execution and transmission to the Spacecraft/instrument. Procedure verification details will be the responsibility of the EOSDIS contractor and are TBD.

8.4 Narrative Procedures

The CERES PI, with support from the FOT and Spacecraft subsystem engineers, will define any standard and contingency operating procedures needed for in-orbit flight operations. These procedures will be defined by the EOSDIS contractor and are TBD.

8.4.1 Standard Operating Procedures

The standard operating procedures will define the day-to-day operations of the EOS-AM Spacecraft at the EOC.

These procedures will be baselined and procedure changes will require the NASA Mission Operations Manager's approval.

These procedures will be defined by the EOSDIS contractor and are TBD.

8.4.2 Contingency Operating Procedures

The contingency operating procedures will define the actions required by the FOT during potential and credible anticipated non-nominal situations. Examples of this category of procedures for the CERES instruments are:

a. Instrument requirements during Spacecraft safe mode and survival mode.
b. A procedure to be followed in the event of a CERES ALERT condition.

These procedures will be defined by the EOSDIS contractor and are TBD.

APPENDIX I

10 SPACECRAFT CONTROLS COMPUTER INSTRUMENT REQUIREMENTS

Specific requirements for interaction between the Spacecraft on-board computer and the CERES instrument are understood to be as follows:

10.1 Stored Command Requirements

CERES stored command requirements are as follows:

10.1.1 Absolute Time Commands

CERES requirements for Absolute Time Command utilization are TBD.

10.1.2 Relative Time Command Sequences (RTCS)

CERES requirements for RTCS command utilization are TBD.

10.2 Telemetry Monitor (TMON) Requirements

TMON application to CERES is TBD.

APPENDIX II

20 INSTRUMENT COMMAND PROCESSING REQUIREMENT

Specific command processing requirements for the CERES instrument are understood to be as follows:

20.1 Activity Planning Requirements

Activity planning for CERES is as follows:

20.1.1 Activity Definition

TBD

20.1.2 Event Definition

TBD

20.1.3 Activity Scheduling

There are critical timing requirements for CERES commands or activities. Details are TBD.

20.2 Constraint Check Requirements

TBD

20.2.1 Command Level

TBD

20.2.2 Activity Level

TBD

20.2.3 Schedule Conflicts

The timing of CERES commands may be TBD to resolve schedule conflicts.

20.3 Real-Time Command Requirements

TBD

20.3.1 Utilization Plans

TBD

20.3.2 Command Generation Capabilities

TBD

20.3.3 Transmission Requirements

There are no unique requirements for transmitting real-time CERES commands.

20.4 Microprocessor Load Handling Requirements

TBD

20.4.1 Uplink Message Structures

TBD

20.4.2 Transmission Requirements

Each microprocessor load is created as a unit, and should be transmitted in complete form. If retransmission is necessary, the complete load should be retransmitted.

20.5 Command Database Requirements

TBD

20.5.1 Command Definition

TBD

20.5.2 Unique Command Structures

None have been identified for CERES.

20.5.3 Activity Definitions (EOC Command Management)

TBD

20.5.4 Stored Command Sequences (EOC Command Management)

TBD

20.5.5 Real-Time Command Sequences (EOC)

TBD

20.5.6 Utilization Constraints

TBD

APPENDIX III

30 TELEMETRY PROCESSING REQUIREMENTS

Specific requirements for the processing of real-time CERES telemetry data are understood to be as follows:

30.1 Decommutation Requirements

All telemetry required by the EOC to support instrument early orbit operation and activation are assumed to be defined in the I&T databases to be transferred to the EOC.

30.1.1 Engineering Telemetry Format

CERES telemetry formats are TBS.

30.1.2 Science Telemetry Format (20 kbps)

CERES telemetry formats are TBS.

30.2 Derived Function Generation Requirements

TBD

30.3 Status Determination Requirements

TBD

30.3.1 Mode Definition

TBS

30.3.2 Event/Mode-Change Detection

TBD

30.4 Uplink Verification Requirements

TBD

30.4.1 Command Verification

TBD

30.4.2 Microprocessor Load Verification

CERES microprocessor load transmissions will be verified by the FOT with a check sum or TBD method.

The CERES PI will verify microprocessor loading in the instrument.

30.5 Health and Safety Monitoring Requirements

CERES health and safety will be monitored in the FOT. The CERES PI will identify critical instrument health and safety parameters along with their limits. The CERES PI may monitor the CERES instruments health and safety at a his facility if desired.

30.5.1 Limit Check Requirements

TBD

30.5.2 Alarm Requirements

Alarms are required when yellow or red limits are reached. Other conditions are (TBD).

30.6 Display Generation Requirements

TBD

30.6.1 Parameter Calibration

TBD

30.6.2 CRT Page Display

TBD

30.6.3 Strip-Chart Recorder Displays

TBD

30.6.4 Hardcopy Outputs

TBD

30.7 EOC Telemetry Database Requirements

TBD

30.7.1 Telemetry Function Definition

TBD

30.7.2 Derived Function Definition

TBD

30.7.3 Mode/Event Definition

TBD

30.7.4 Limit Check Thresholds

TBD

30.7.5 Alarm Generation Criteria

TBD

30.7.6 Command Verification Criteria

TBD

30.7.7 Display Definition

TBD

30.7.8 Calibration Parameters

TBD

30.7 EOC Telemetry Database Requirements

TBD

30.7.1 Telemetry Function Definition

TBD

30.7.2 Derived Function Definition

TBD

30.7.3 Mode/Event Definition

TBD

30.7.4 Limit Check Thresholds

TBD

30.7.5 Alarm Generation Criteria

TBD

APPENDIX IV

40 OPERATIONAL ACTION REQUIREMENTS

Specific CERES requirements for operational action under specified conditions are understood to be as follows:

40.1 Contingency Action Requirements

TBD

40.1.1 Emergency Power-Down

The emergency power down sequences for CERES are TBD.

40.1.2 Limits/Alarm Reaction

TBD. Out-of-limits conditions will be reported to the CERES Principal Investigator. Out of limit conditions are (TBD).

40.1.3 Spacecraft Safe Mode (SCC running)

TBD.

40.1.4 SCC Halted

TBD

40.1.5 Other On-Board Processors Halted

TBD

40.1.6 Uplink Transmission Failure

TBD

40.2 Preactivation Requirements

TBD

40.3 Spacecraft Maneuver Accommodation

The plan for CERES operation during Spacecraft maneuvers is TBD.

40.3.1 Orbit Adjust

TBD

40.4 Alignment/Calibration Requirements

TBD

40.5 Special Observation Requirements

TBD

APPENDIX V

50 PLANNING AID REQUIREMENTS

A standard set of orbital parameters and selected orbital events will be generated by the FDF and transferred to the EOC (and TBD) where the CERES Principal Investigator can access the data for planning purposes and for use in the generation of any additional unique planning aids required. The accuracy of the data shall be the best possible.

The following are example summaries of the long term and short term data to be provided. The actual data to be selected for CERES use is TBD. Details associated with these TBD parameters are defined in TBD.

50.1 Parameter Definition

TBD

50.1.1 Long Term

The long term aids to be used by CERES is TBD.

The following is an example summary of long term aids:

EOS-AM Orbital Characteristics

a. Brouwer mean orbital elements
b. Solar beta angle
c. Direction of S/C flight
d. Local mean Sun time
e. S/C ascending node
f. Length of TBD day and night
g. Length of S/C day and night

Ephemeris:

a. Solar
b. Lunar
c. Planetary

Star Catalog

a. Ascending Node Prediction
b. Longitudinal spacing and precession rate.

Solar Eclipse predictions.

50.1.2 Short Term

The short term aids to be used by CERES is TBD.

The following is an example summary of short term aids:

a. Spacecraft ephemeris
b. Brouwer mean orbital elements.
c. Predicted Orbit Adjust time
d. Solar Eclipse predicts.

Orbital Events
a. Ascending and descending node
b. Spacecraft nadir sunrise and sunset terminator crossing
c. Terminators (both) for TBD degree line of sight at TBD altitude
d. South Atlantic Anomaly entrance and exit.
e. Sunset and Sunrise at TBD altitude.
f. Yaw and elevation angle to sun TBD-seconds before sunset
g. Yaw angle to sun at sunrise for TBD altitude.
h. Grazing sunrise begin/sunset end event
i. Grazing sunrise end event

Solar Beta Angle.

50.2 Parameter Specifications

The CERES unique specifications for planning aid parameter are TBD

50.2.1 Information Accuracy

Nominal.

50.2.2 Data Precision

Nominal.

50.2.3 Data Frequency

Nominal.

50.3 Information Handling Requirements

The CERES PI will access planning and scheduling tools via his IST. Details are TBD.

50.3.1 Format

Standard IST/EOC interface file format, per TBD.

50.3.2 Packaging

Standard (i.e., time-annotated date file).

50.4 Access Timeline Requirements

CERES plans to access planning and scheduling aid data on a TBD basis.

50.4.1 Lead Time

Nominal (i.e., long term parameters consistent with long-term science planning schedule; short-term parameters TBD days/hours beforehand).

50.4.2 Retention

Nominal (i.e., long term parameter projections throughout mission, short-term parameters until current).

APPENDIX VI

60 SPECIAL ACTIVATION REQUIREMENT

Specific requirements for activation of the CERES instrument are understood to be as follows:

60.1 Commanding Requirements

Predefined in the database (I&T and EOC) commands required for activation and normal operations.

60.1.1 Special Command Sequences

At least TBD command sequences will be required for the initial activation checkout steps planned for the CERES instruments.

60.1.2 Special Command Constraints

The EOC TBD mode transmission shall be used for all CERES commands not defined in the database.

60.1.3 Real-time Command Generation

There are TBD special real-time command generation requirements for CERES activation. All normal real-time command generation capabilities (defined in 20.4) are required.

60.1.4 Special Command Transmission Requirements

TBD.

60.2 Telemetry Processing Requirements

TBD

60.2.1 Special Telemetry Formats

There is are no special telemetry formats identified for CERES.

60.2.2 Special Processing Functions

TBD

60.2.3 Special Processing Parameters

TBD

60.2.4 Special Displays

CERES science functions are to be displayed in TBD.

60.2.5 Strip Chart Recorder

TBD

60.3 Remote Support Coordination Requirements

TBD

60.3.1 Quick-look Playback Handling

Access to quick-look data will be provided via the TBD.

60.3.2 Voice Communications

Voice communications will be required between the CERES instruments activation position within the EOC and the CERES remote terminal facility throughout CERES activation.

60.4 Facility Requirements

The CERES PI requires access to TBD standard instrument activation position within the EOC, and standard office-type working space and services for a TBD activation staff.

APPENDIX VII

70 ABBREVIATIONS

ACE	Attitude Control Electronics
ADAC	Attitude Determination and Control
APID	Application Process Identifier
ARC	Ames Research Center
ARIA	Advanced Range Instrumented Aircraft
ASTER	Advanced Spaceborne Thermal Emission and Reflection
ATC	Absolute Time Command
BDD	Baseline Description Document
BDU	Bus Data Unit
C&DH	Command & Data Handling
CADU	Channel Access Data Unit
CCSDS	Consultative Committee For Space Data Systems
CERES	Clouds and Earth's Radiant Energy System
CLTU	Command Link Transmission Unit
CMD	Command
COMM	Communications Subsystem
CSMS	Communication and System Management Segment
CTIU	Command and Telemetry Interface Unit
C&T	Command and Telemetry
DAA	Data Acquisition Assembly
DAAC	Distributed Active Archive Center
DADS	Data Archive and Distribution System
DAP	Data Acquisition Processor
DAR	Data Acquisition Request
DAS	Direct Access System
DB	Direct Broadcast
DCU	Data Control Unit
DDL	Direct Downlink
DMU	Data Memory Unit
DP	Direct Playback
DSN	Deep Space Network
ECOM	EOS Communication Network
ECS	EOSDIS Core System
EDOS	EOS Data and Operations System
EDU	Error Detection and Correction Data Unit
EOC	EOS Operations Center
EOS	Earth Observing System

EOS-AM	Earth Observing System - 10:30 descending node orbit
EOSDIS	EOS Data and Information System
EPS	Electrical Power System
ESDIS	Earth Science Data and Information System
ESN	ESDIS Science Network
FDF	Flight Dynamics Facility
FDIR	Failure Detection, Isolation and Recovery
FIFO	First In First Out
FOS	Flight Operations Segment
FOT	Flight Operations Team
FOV	Field of View
FPSG	Flight Planning and Scheduling Group
GIIS	General Instrument Interface Specification
GN	Ground Network
GN&CS	Guidance, Navigation and Control Subsystem
GSFC	Goddard Space Flight Center
HGA	High Gain Antenna
I & T	Integration and Test
ICC	Instrument Control Center
ICD	Interface Control Document
ICP	Instrument Control Processor
IFOU	Instrument Flight Operations Understanding
IMS	Information Management System
IR	Infrared
IST	Instrument Support Terminal
IWG	Investigator Working Group
JPL	Jet Propulsion Laboratory
Kbps	Kilobits per Second
KSA	Ku-Band Single Access
LTIP	Long Term Instrument Plan
LTSP	Long Term Science Plan
MAM	Mirror Attenuator Mosaic
Mbps	Megabits per Second
MISR	Multi-angle Imaging Spectro Radiometer
MO&DSD	Mission Operations and Data Systems Directorate
MODIS	Moderate Resolution Imaging Spectrometer
MOM	Mission Operations Manager
MOPITT	Measurements of Pollution in the Troposphere

MSFC	Marshall Space Flight Center
NASA	National Aeronautics and Space Administration
NASCOM	NASA Communications Network
NCC	Network Control Center
NIR	Near Infrared
NSI	NASA Science Internet
P/B	Playback
PGS	Product Generation System
PI	Principal Investigator
PSCN	Program Support Communications Network
R/T	Real-Time
RAM	Random Access Memory
ROM	Read only Memory
RS	Reed-Solomon
RTCS	Relative Time Command Sequence
SAR	Schedule Add Request (TDRSS)
SCC	Spacecraft Controls Computer
SCF	Science Computing Facility
SDF	Software Development Facility
SDPS	Science Data Processing Segment
SCT	Stored Command Table
SFE	Science Formatting Equipment
SMA	S-Band Multiple Access
SMC	System Management Center
SN	Space Network
SSA	S-Band Single Access
SSR	Solid State Recorder
STGT	Second TDRSS Ground Terminal
SWICS	Short Wave Internal Calibration Source
SWIR	Short Wave Infrared
TBD	To Be Determined
TBR	To Be Reviewed
TBS	To Be Supplied
TDRS	Tracking and Data Relay Satellite
TDRSS	Tracking and Data Relay Satellite System
TL	Team Leader
TLM	Telemetry
TMON	Telemetry Monitor
TOD	Time-of-Day
TONS	TDRSS Onboard Navigation System

USCCS ..... User Spacecraft Clock Calibration System
UTC ..... Universal Time Code

VCID ..... Virtual Channel Identifier
VCDU ..... Virtual Channel Data Unit
VNIR ..... Visible and Near Infrared

WOTS ..... Wallops Orbital Tracking Station
WSGT ..... White Sands Ground Terminal

Next Assembly	Used on
20008500G1	EOS–AM

First Application
EOS–AM

Revisions		Rev A	
Ltr	Description	Date	Approved
Initial Issue		3/31/93	CM/GSR
A	Revised per ECN EOS0062	8/23/93	CM/GSR

Revision Record Continued on Sheet _____

Contract No.	NAS5–32500
Written	N. Benko
Date	1/15/93
Approved	N. Koepp–Baker
Date	3/29/93
Approved	
Date	
Issued	G. Rauscher
Date	4/2/93

MARTIN MARIETTA

POST OFFICE BOX 800
PRINCETON, NEW JERSEY 08543–0800
TELEPHONE (609) 490–3400

Interface Control Drawing,
Earth Observing System AM Spacecraft to
Clouds and the Earth's Radiant Energy System

Size	Code Ident No.	
A	49671	20008820

Top Assembly Drawing,
Earth Observing System–AM Spacecraft,
20008500G1

Interface Control Drawing,
Earth Observing System–AM Spacecraft to
Clouds and the Earth's Radiant Energy System, 20008820

- Interface Control Drawing, Mechanical, Drawing,
  Earth Observing System–AM Spacecraft to
  Clouds and the Earth's Radiant Energy System, 20008821
- Interface Control Drawing, Mechanical, Tables,
  Earth Observing System–AM Spacecraft to
  Clouds and the Earth's Radiant Energy System, 20008822
- Interface Control Drawing, Thermal
  Earth Observing System–AM Spacecraft to
  Clouds and the Earth's Radiant Energy System, 20008823
- Interface Control Drawing, Electrical, Schematic,
  Earth Observing System–AM Spacecraft to
  Clouds and the Earth's Radiant Energy System, 20008824
- Interface Control Drawing, Electrical, Tables,
  Earth Observing System–AM Spacecraft to
  Clouds and the Earth's Radiant Energy System, 20008825
- Interface Control Drawing, Integration and Test
  Earth Observing System–AM Spacecraft to
  Clouds and the Earth's Radiant Energy System, 20008826
- Interface Control Drawing, Command and Telemetry
  Earth Observing System–AM Spacecraft to
  Clouds and the Earth's Radiant Energy System, 20008827

Figure 1. Drawing Tree

Table I. ICD Revision Status

20008821 MICD Drawing		20008822 MICD Tables		20008823 TICD		20008824 EICD Schematic		20008825 EICD Tables		20008826 I&T ICD		20008827 C&DH ICD	
Issue	Date	Issue	Date	Issue	Date	Issue	Date	Issue	Date	Issue	Date	Issue	Date
Initial	06/08/93	Initial	01/15/93	Initial	06/03/93								

Size A | Code Ident No. 49671 | 20008820 | Sheet 3

ASD–EW 20513–89

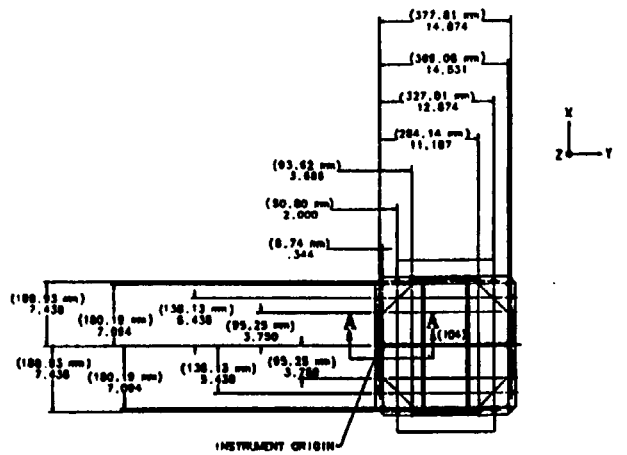

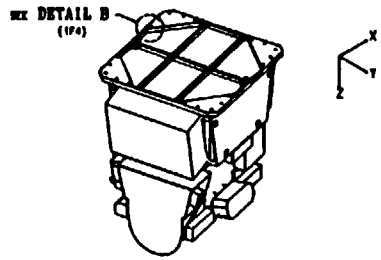

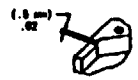

DETAIL B (1H4)
NOT TO SCALE
TYP 8 PLACES

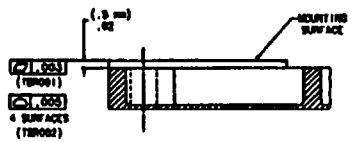

SECTION A-A (1F6)
NOT TO SCALE

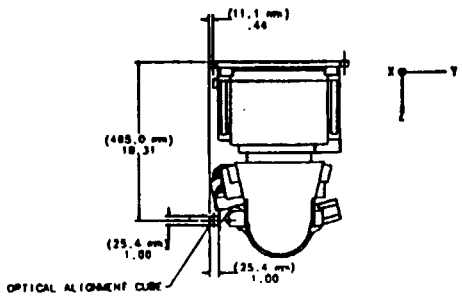

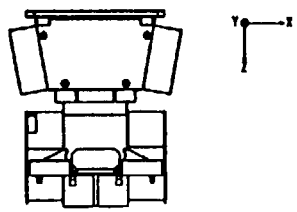

OUTLINE DRAWING - LAUNCH CONFIGURATION

NOTES

1. THE CERES MECHANICAL INTERFACE INFORMATION IS CONTAINED IN TWO DRAWINGS, THIS DRAWING AND 20008822, MICD TABLES.
2. THE SPACECRAFT COORDINATE AXES ARE SHOWN. THE INSTRUMENT COORDINATE AXES ARE PARALLEL TO THE SPACECRAFT AXES. THE RELATIONSHIP BETWEEN THE INSTRUMENT AND SPACECRAFT COORDINATE AXES IS SHOWN IN 20008822, MICD TABLES, FIGURE 1 AND TABLE 1.
3. LOCATION OF MOUNTING HOLES WILL BE CONTROLLED BY COORDINATED TOOLING AND HELD TO DIMENSIONS SHOWN.
4. THERMAL BLANKET (MULTI-LAYER INSULATION) (NOT SHOWN) ENVELOPE NOT TO EXCEED 0.50 IN. (12.7 mm) GREATER THAN THE STRUCTURE DIMENSIONS SHOWN.
5. SHEET 4 SHOWS CERES, ITS ACCOMODATION EQUIPMENT, AND PART OF THE SPACECRAFT STRUCTURE. OTHER INSTRUMENTS, EQUIPMENT, AND STRUCTURE ARE NOT SHOWN FOR SIMPLICITY.
6. THE INSTRUMENT ORIGIN IS AT THE CENTER OF THE MOUNTING HOLE DEFINED BY THE LOCATION OF THE MORE HIGHLY TOLERANCED SHEAR PIN. (-Y SIDE) THE INSTRUMENT X-Y PLANE IS DEFINED BY THE OUTER SURFACE OF THE FOUR CORNER MOUNTING PADS.
7. SHEET 5 SHOWS THE ENTIRE SPACECRAFT IN THE ATLAS IIAS FAIRING WITH 36 INCH EXTENSION. (SHOWN OPEN FOR CLARITY)
8. SHTS 1, 2, 3, 9, 10, 13, 14, AND 16 OF THIS DRAWING SHOW ONE OF TWO IDENTICAL UNITS, CERES-FORE AND CERES-AFT.

TABLE OF CONTENTS (SEE NOTE 1)

TITLE	SHEET
[illegible]	1
[illegible]	2
[illegible]	3
[illegible]	4
[illegible]	5
[illegible]	6
[illegible]	7
[illegible]	8
[illegible]	9
[illegible]	10
[illegible]	11
[illegible]	12
[illegible]	13
[illegible]	14
[illegible]	15
[illegible]	16
[illegible]	17

IN ADDITION TO DOI AND DOD APPROVALS, ALL CHANGES ON THIS DRAWING SHALL HAVE THE APPROVAL AND THE FULL AGREEMENT OF THE PARTIES LISTED BELOW

APPROVAL SIGNATURES

[illegible]		[illegible]		[illegible]		[illegible]		[illegible]	

GE Astro Space

ATLAS IIAS (SHEET 1)

E 49671 20008821

SCALE 1/4 SHEET 1 of 17

20008821
30 August 1993

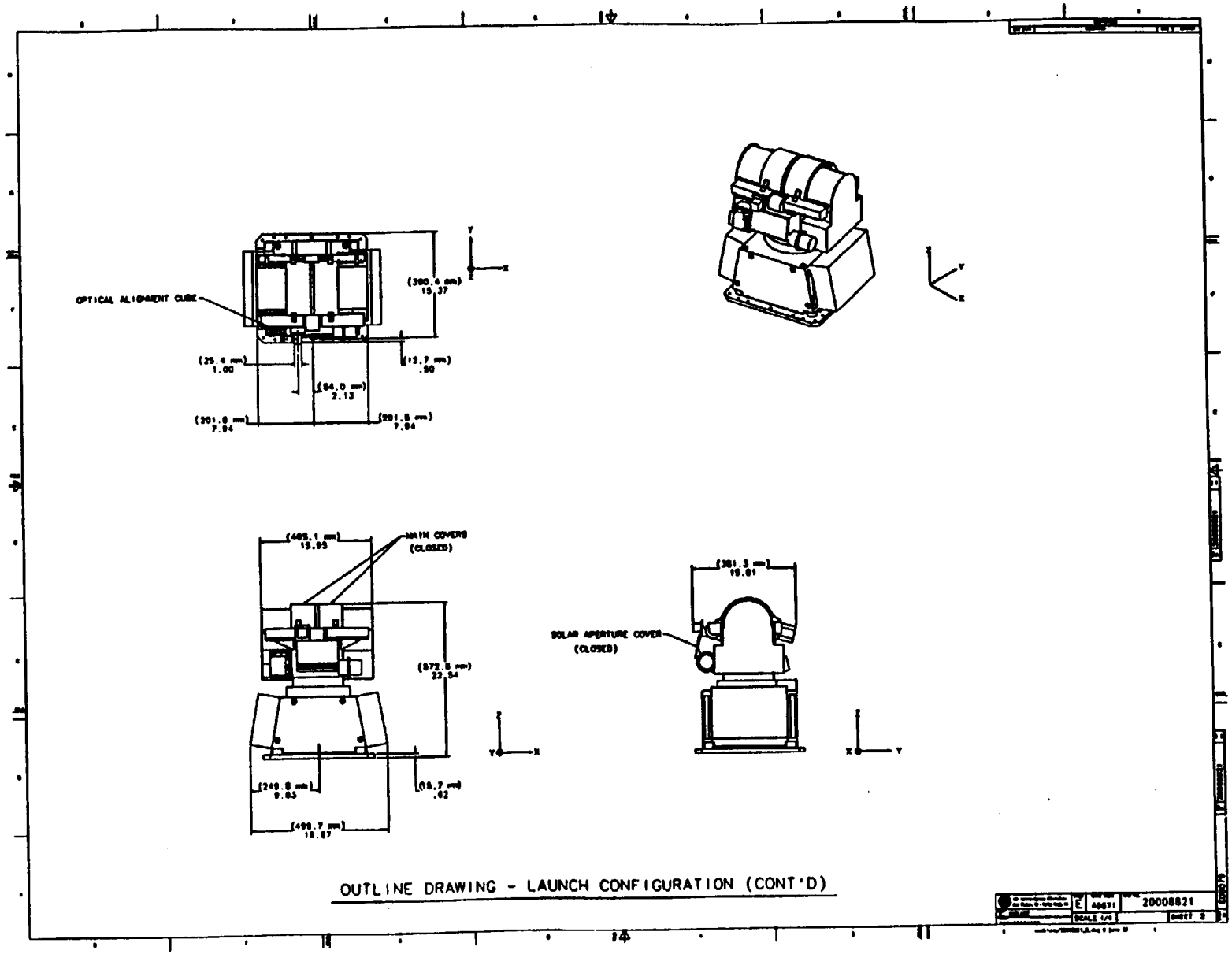

OUTLINE DRAWING - LAUNCH CONFIGURATION (CONT'D)

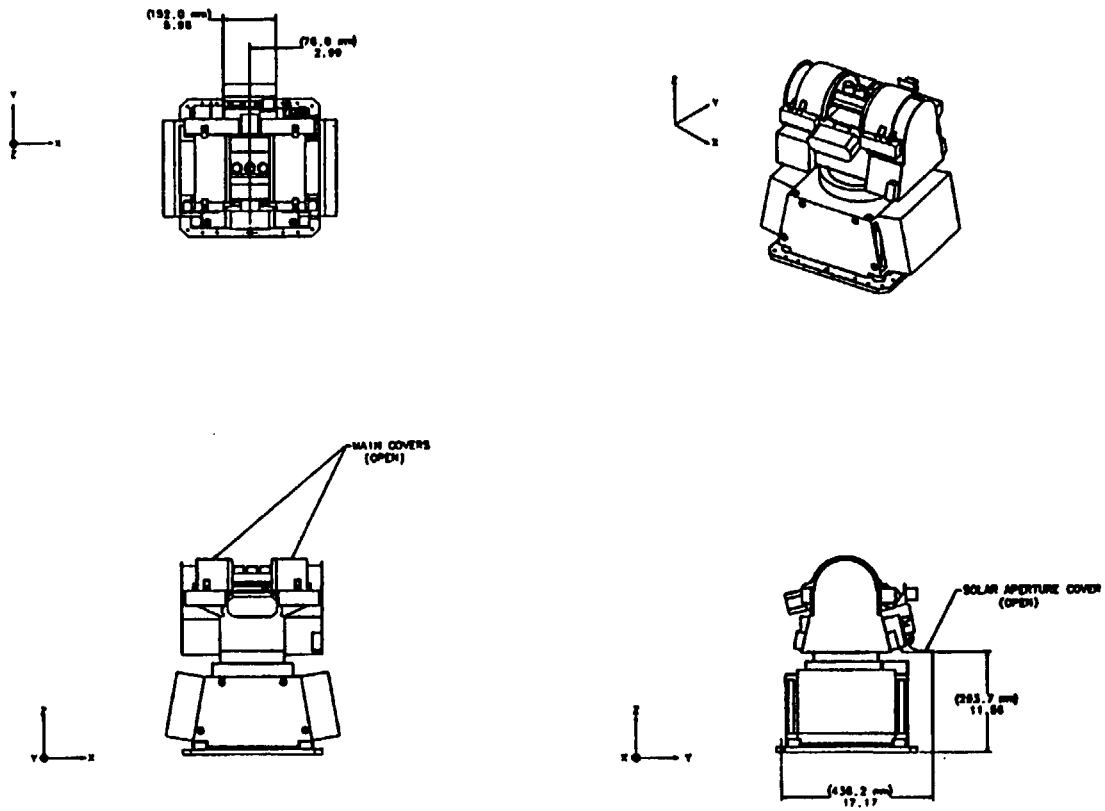

OUTLINE DRAWING - ON ORBIT CONFIGURATION

E 40871 20008821

SCALE 1/4 SHEET 3

20008821
30 August 1993

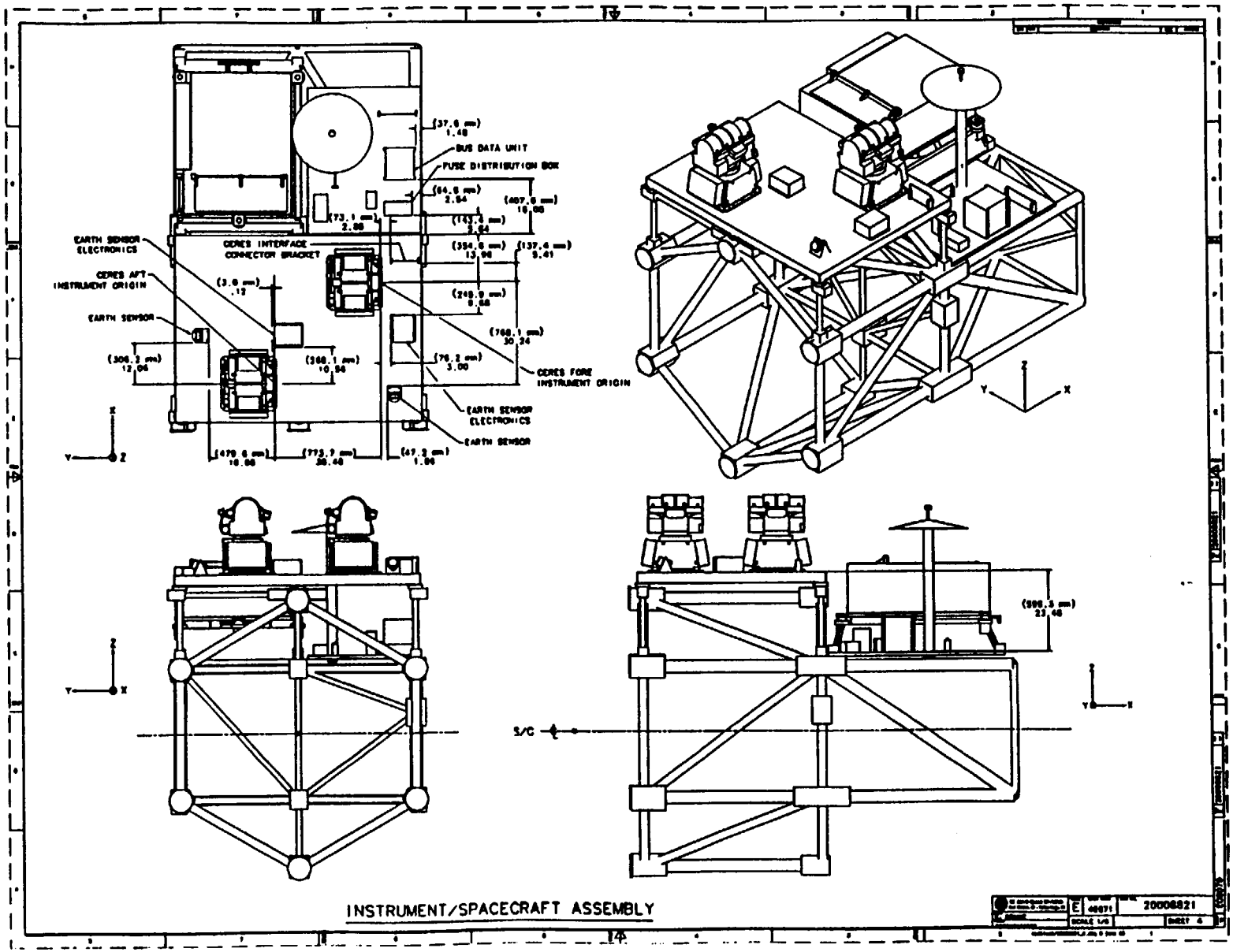

INSTRUMENT/SPACECRAFT ASSEMBLY

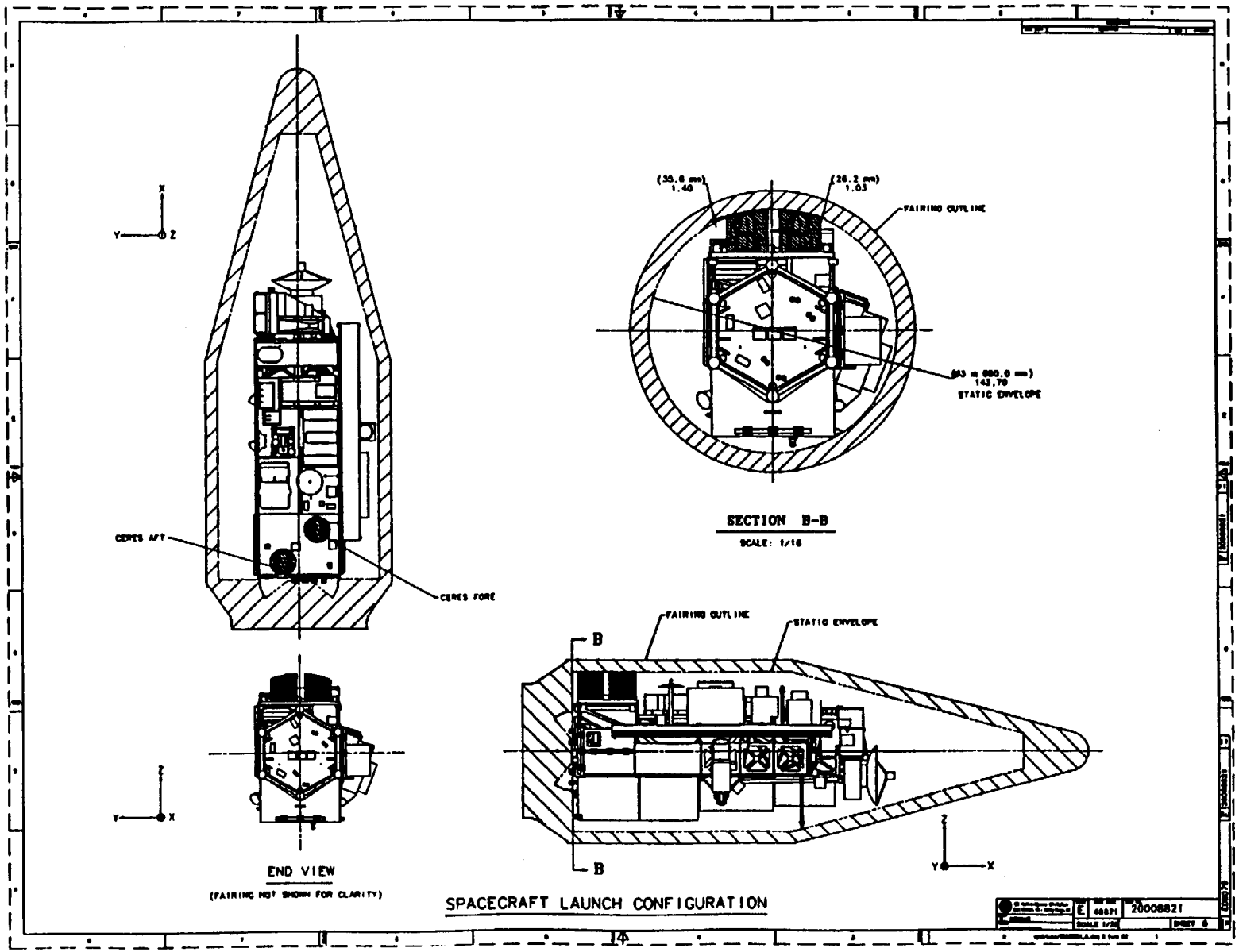

20008821
30 August 1993

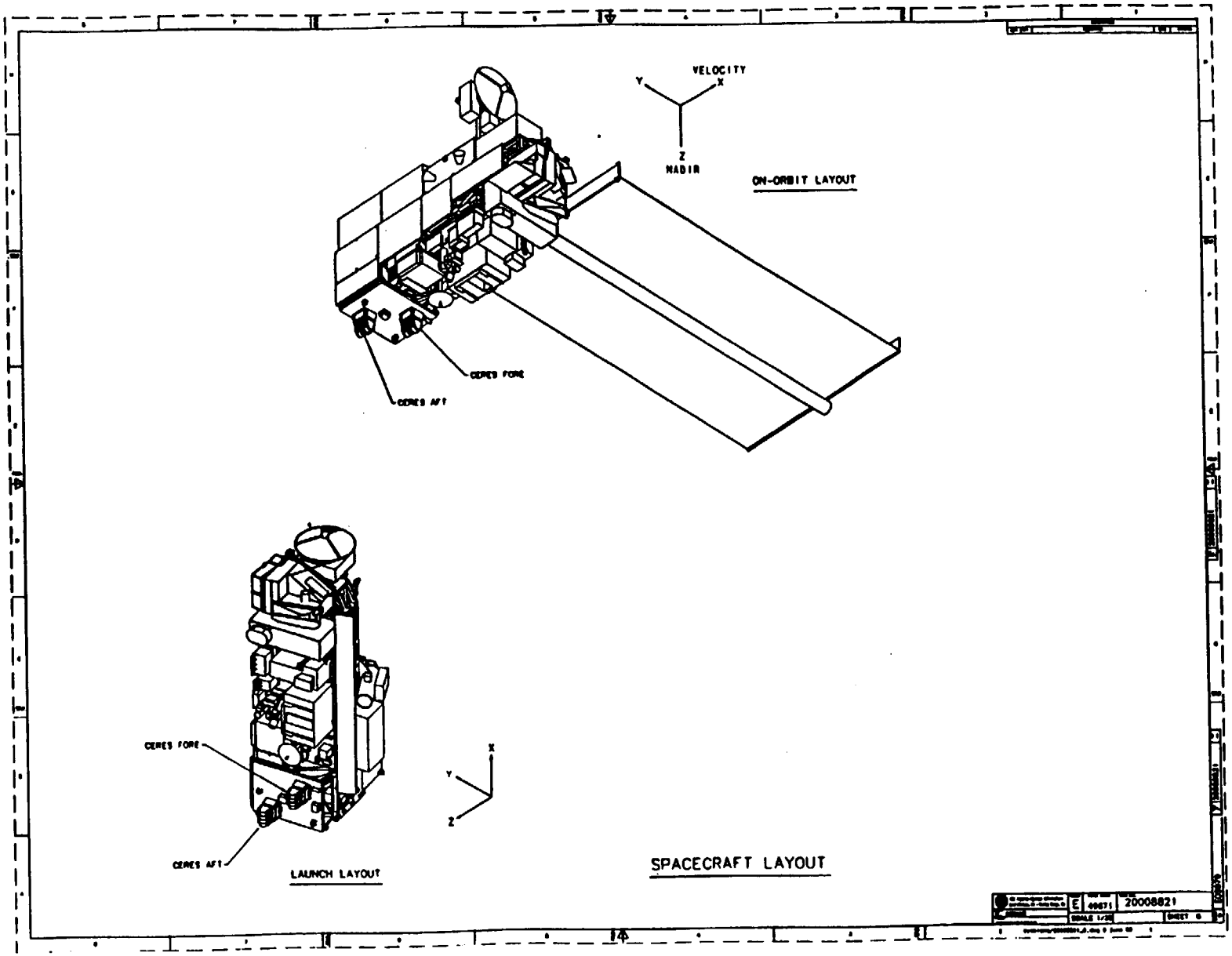
VELOCITY
Y
X
Z
NADIR
ON-ORBIT LAYOUT
CERES FORE
CERES AFT
CERES FORE
CERES AFT
LAUNCH LAYOUT
X
Y
Z
SPACECRAFT LAYOUT
E
49671
20008821
SHEET 6

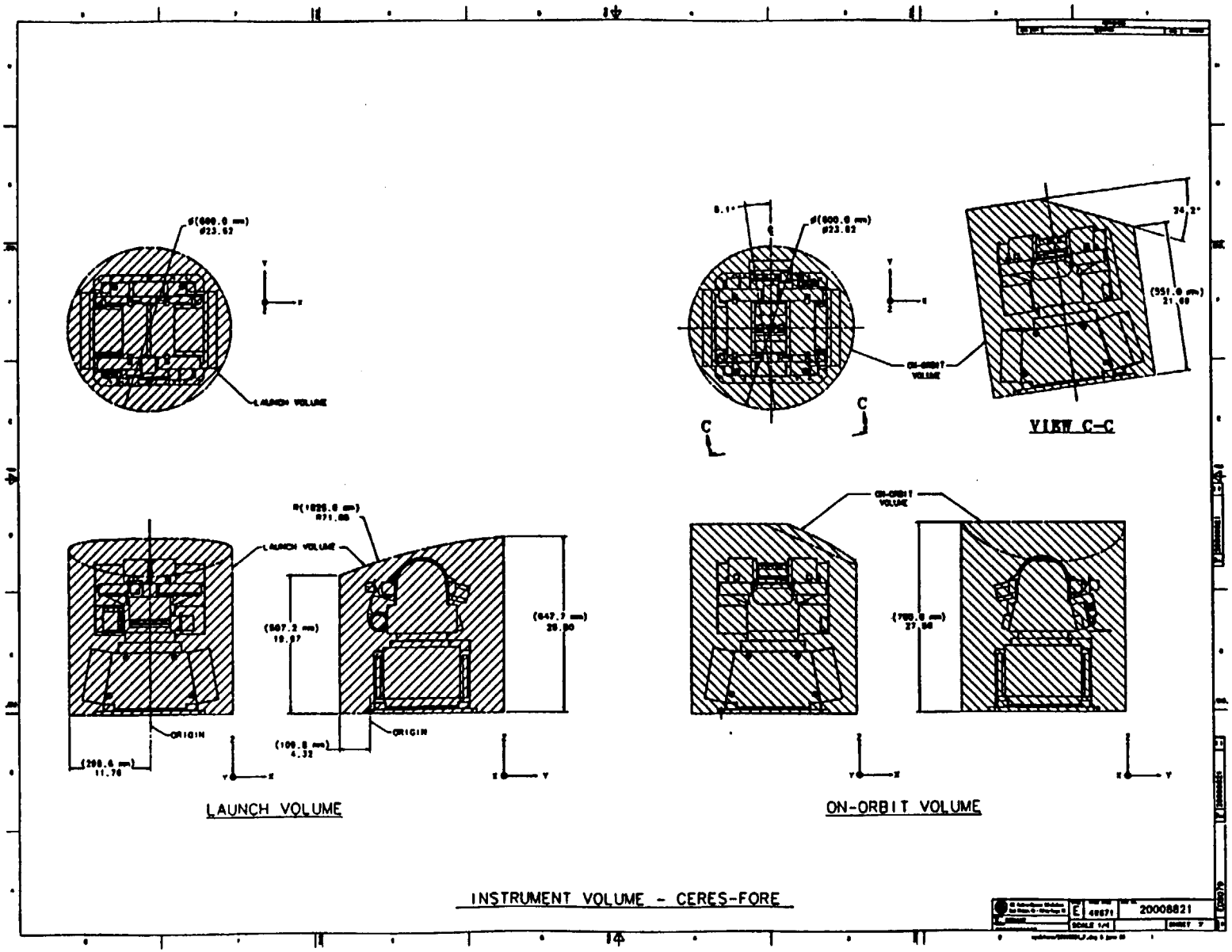

20008821
30 August 1993

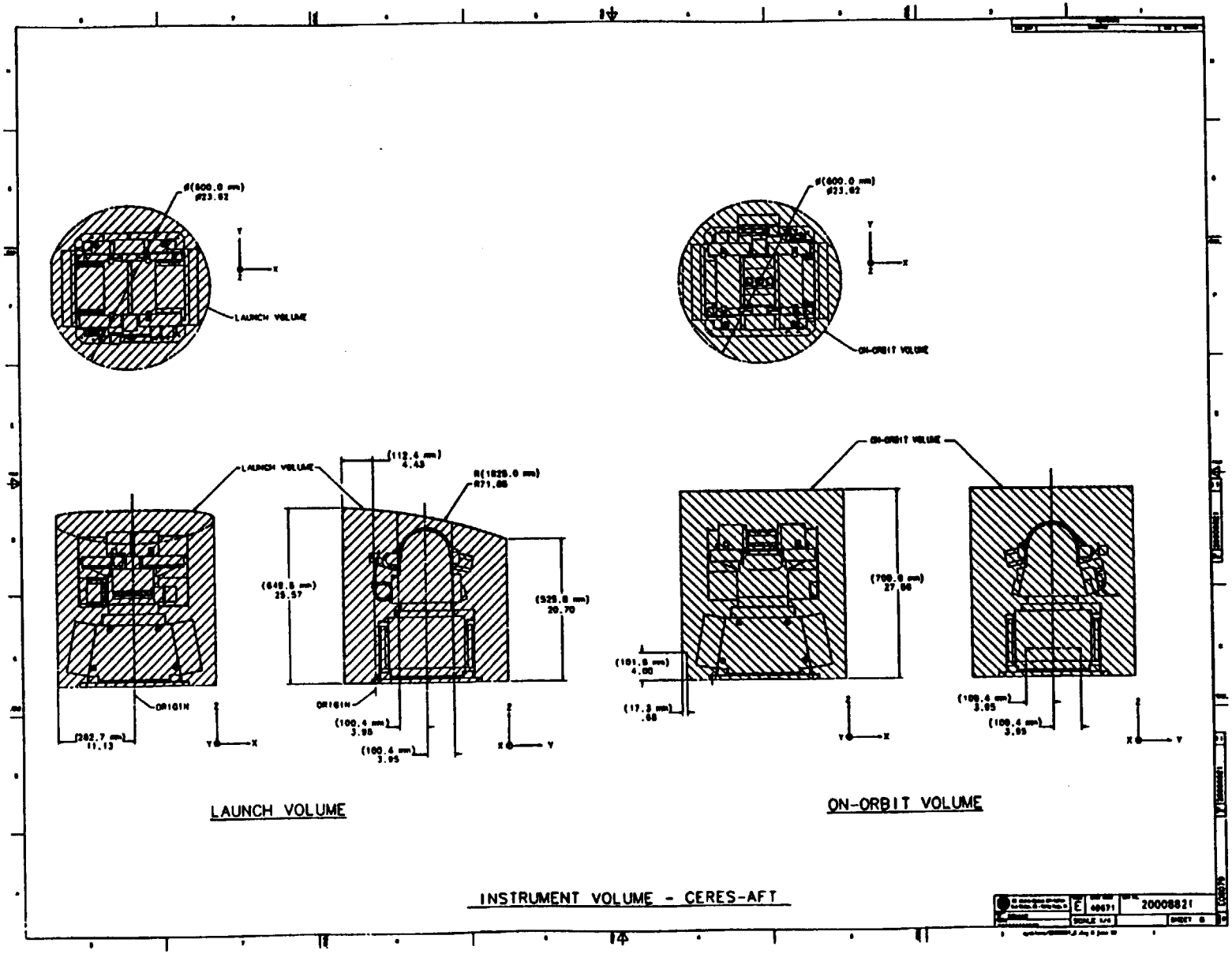
ø(600.0 mm)
ø23.62
LAUNCH VOLUME
ø(600.0 mm)
ø23.62
ON-ORBIT VOLUME
LAUNCH VOLUME
(112.4 mm)
4.43
R(1828.0 mm)
R71.88
(648.5 mm)
25.57
(525.8 mm)
20.70
ORIGIN
(262.7 mm)
11.13
ORIGIN
(100.4 mm)
3.95
(100.4 mm)
3.95
ON-ORBIT VOLUME
(700.9 mm)
27.58
(101.6 mm)
4.00
(17.3 mm)
.68
(100.4 mm)
3.95
(100.4 mm)
3.95
LAUNCH VOLUME
ON-ORBIT VOLUME
INSTRUMENT VOLUME - CERES-AFT
20008821

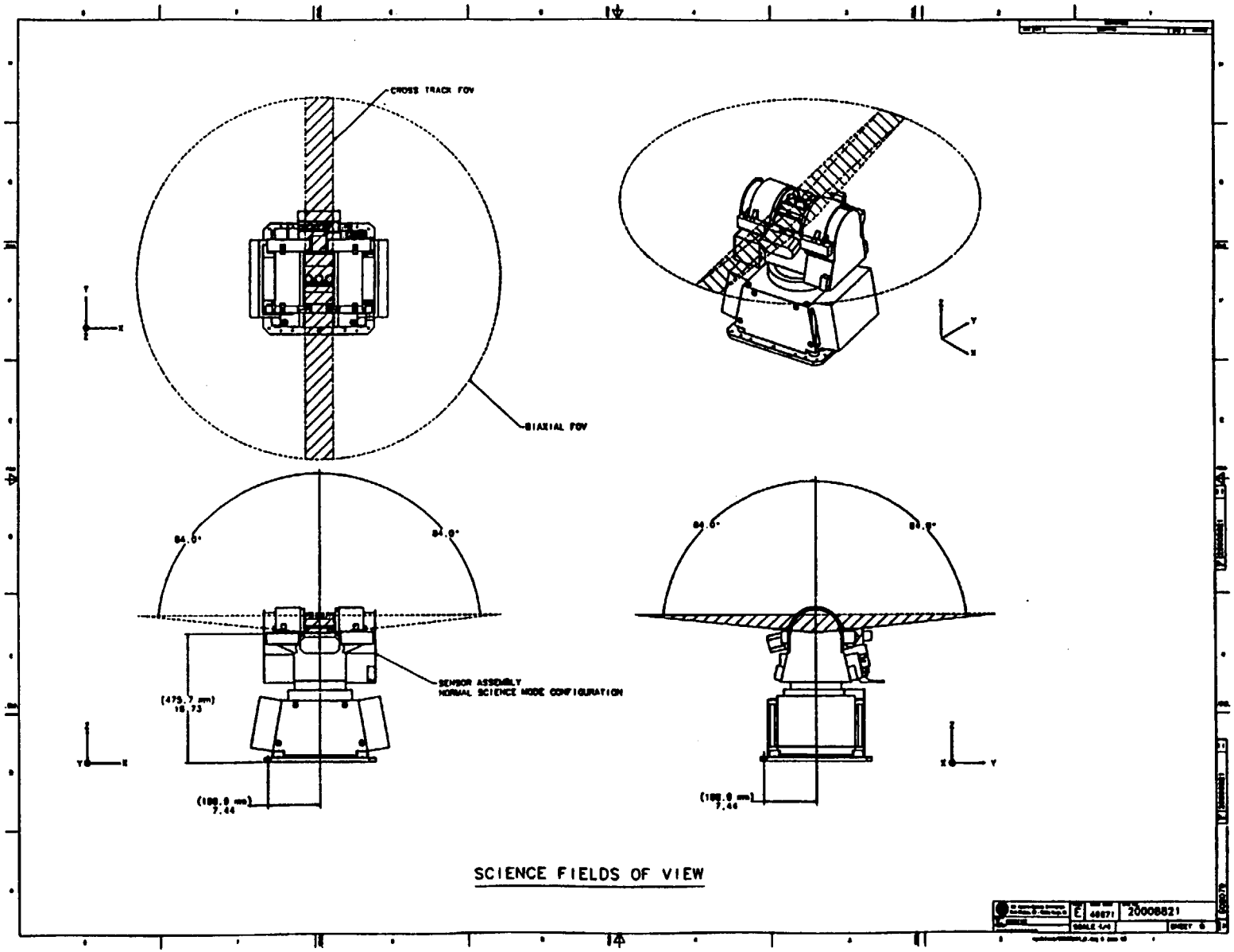
CROSS TRACK FOV
BIAXIAL FOV
84.0°
84.0°
SENSOR ASSEMBLY
NORMAL SCIENCE MODE CONFIGURATION
(475.7 mm)
18.73
(189.0 mm)
7.44
84.0°
84.0°
(189.0 mm)
7.44
SCIENCE FIELDS OF VIEW
E
46871
20008821
SCALE 1/4
SHEET 6

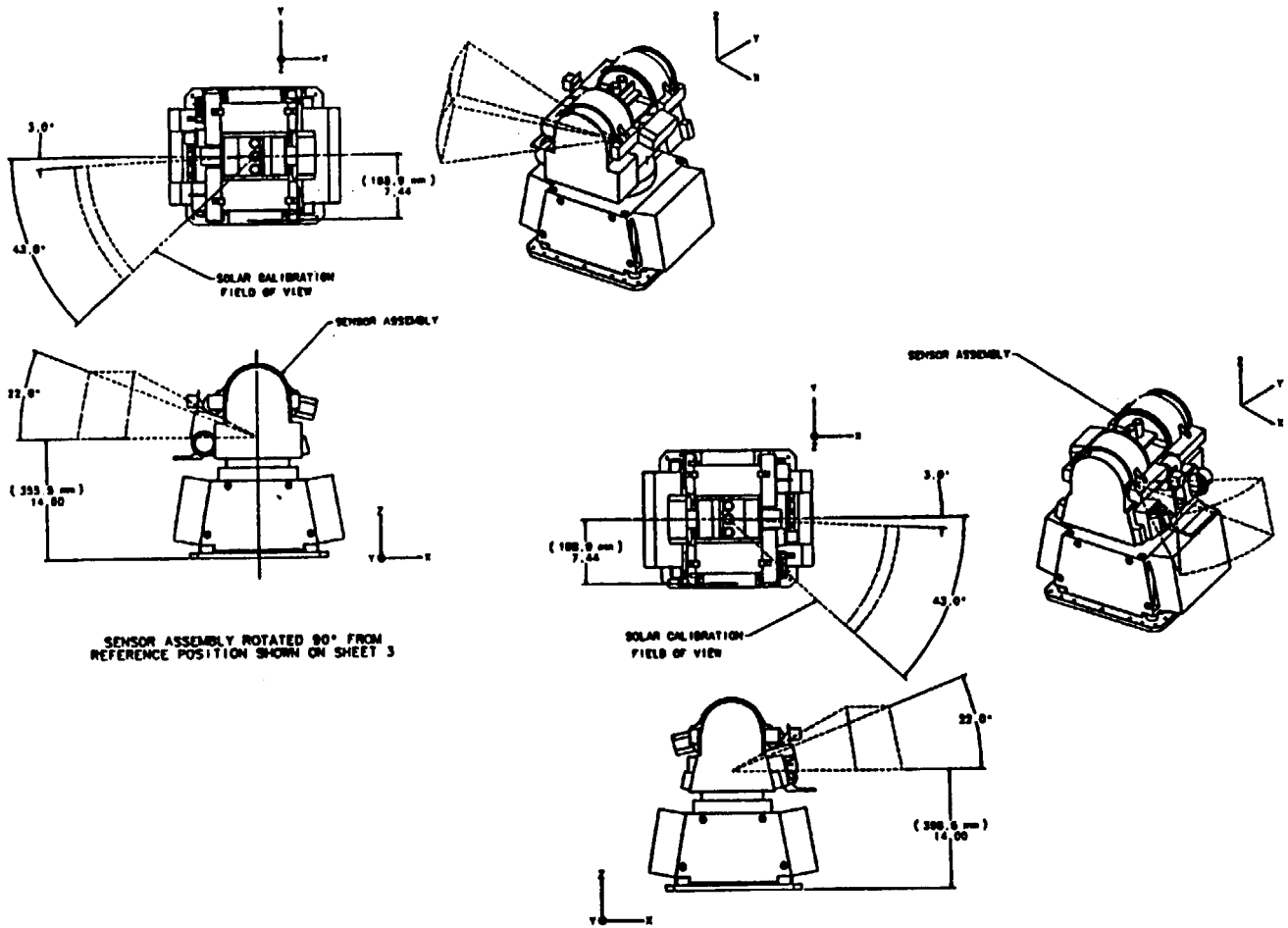

CALIBRATION FIELDS OF VIEW

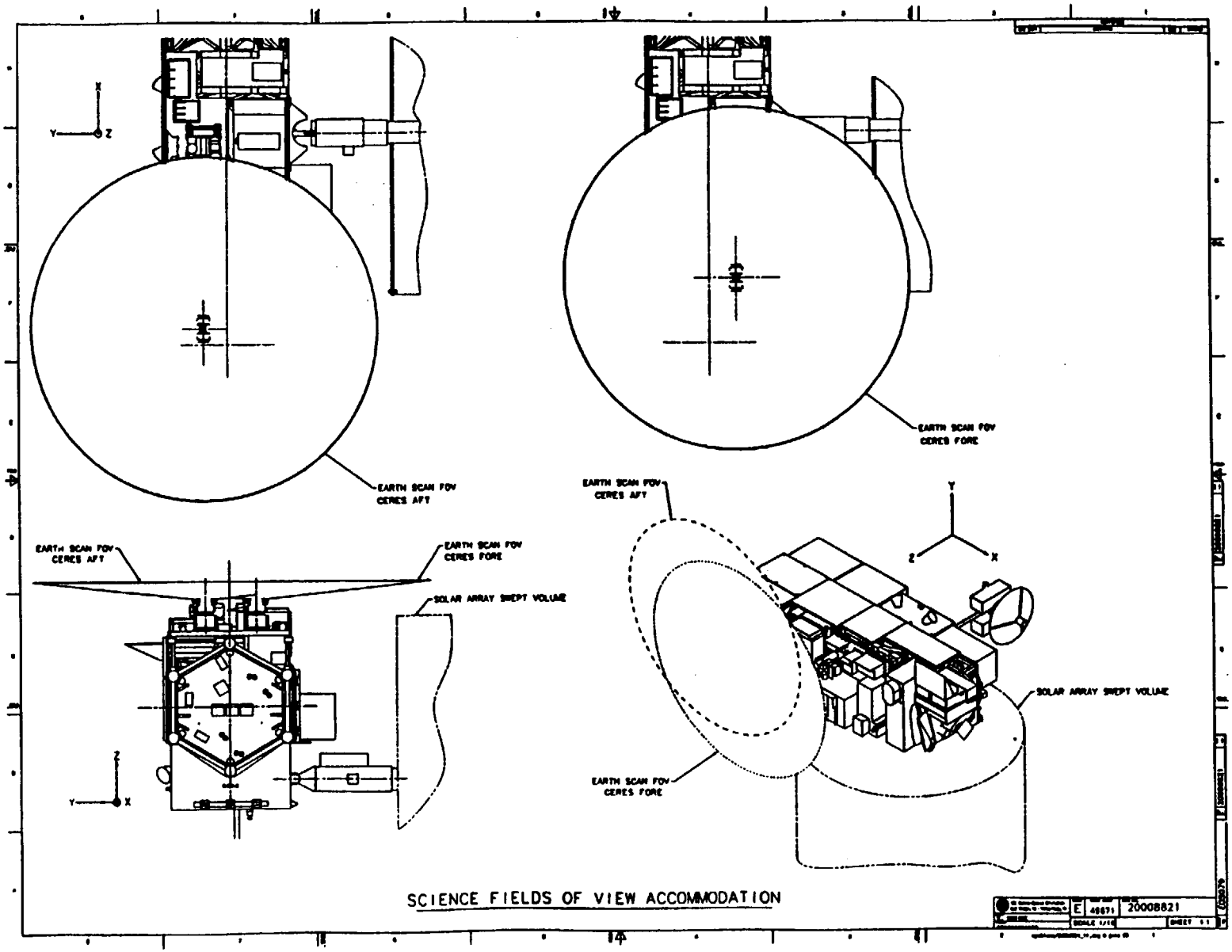

20008821
30 August 1993

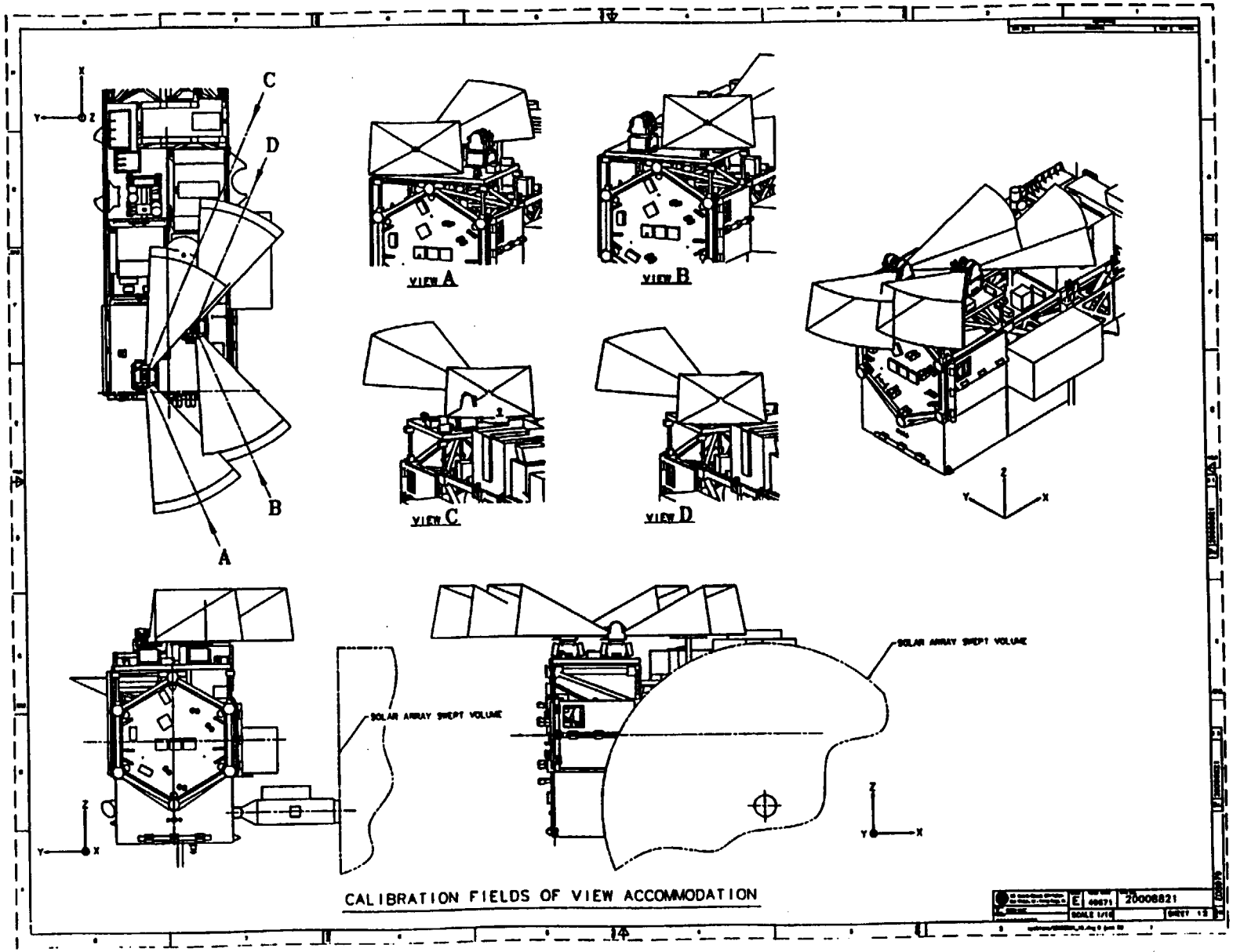
C
D
B
A
VIEW A
VIEW B
VIEW C
VIEW D
SOLAR ARRAY SWEPT VOLUME
SOLAR ARRAY SWEPT VOLUME
CALIBRATION FIELDS OF VIEW ACCOMMODATION
20008821

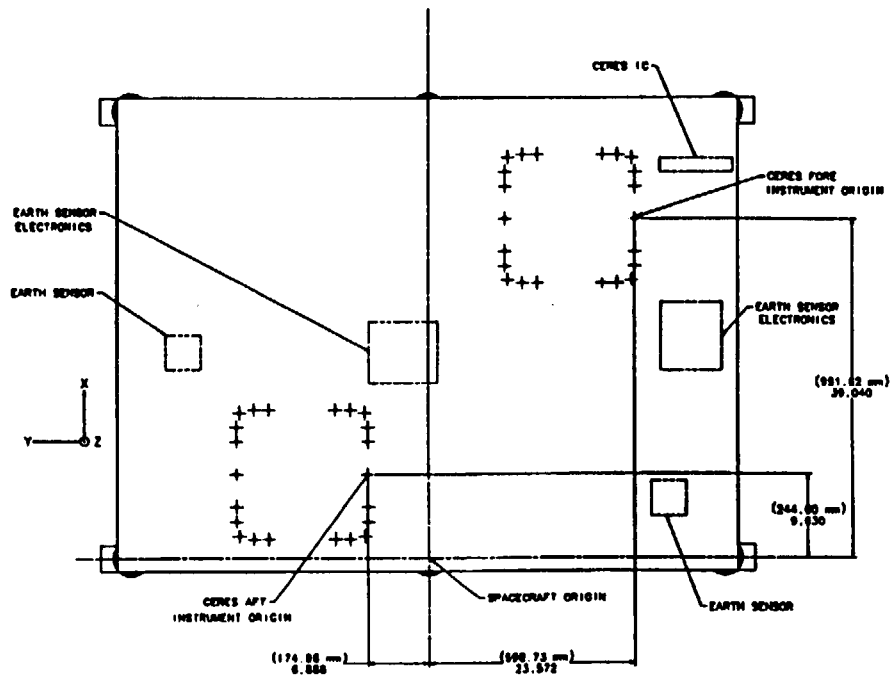

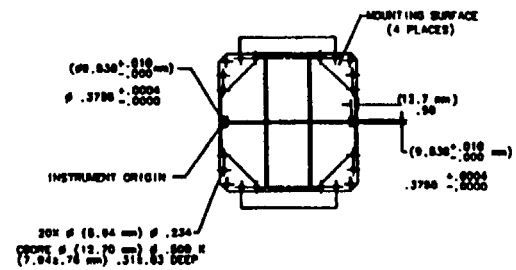

MOUNTING HARDWARE DEFINITION

PART #	DESCRIPTION	QUANTITY	RESPONSIBLE
TBD001	#10-32 UNF FASTENER	40	MARTIN MARIETTA
TBD002	#10 WASHER	40	MARTIN MARIETTA
TBD003	SHEAR PIN	4	MARTIN MARIETTA

FASTENER DETAILS
(TBD004)

MOUNTING DEFINITION

C 49871 20008821 SCALE 1/4 SHEET 13

20008821
30 August 1993

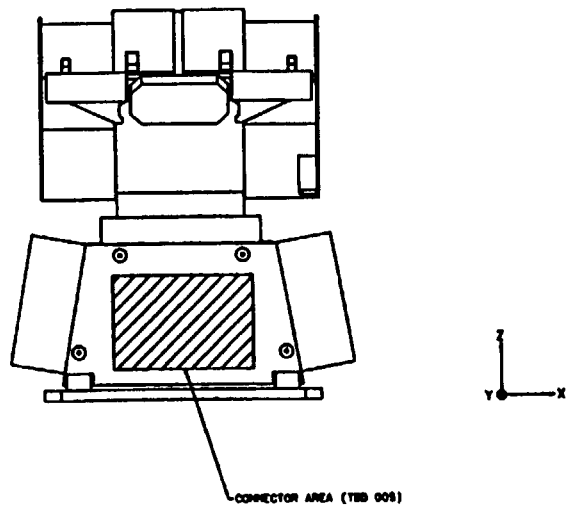

ELECTRICAL HARDWARE DEFINITION

THIS SHEET WILL DESCRIBE THE CERES THERMAL BLANKETS (TBD 006) AND THE CLOSEOUT BLANKETS BETWEEN THE CERES AND SPACECRAFT THERMAL BLANKETS (TBD 007). EXTERIOR HEATER LOCATIONS WILL BE IDENTIFIED (TBD 008).

THERMAL HARDWARE DEFINITION

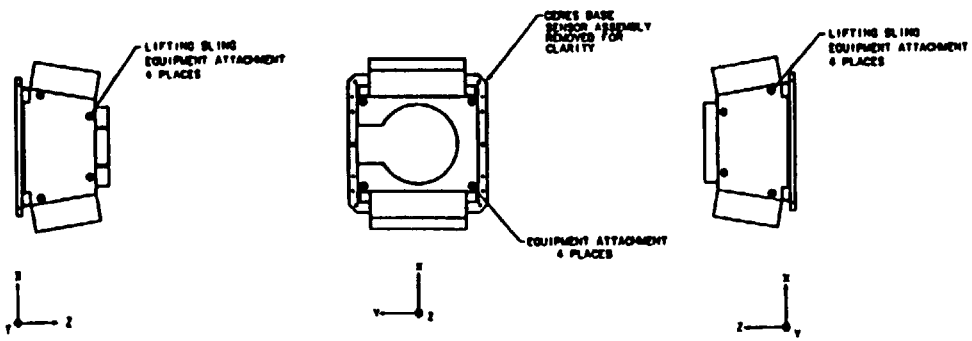

(TBD 008)
HOLE DIAMETER AND LOCATION

(TBD 010)
FIXTURE ENVELOPE

GROUND SUPPORT EQUIPMENT ATTACHMENT

TBD LOG

ITEM	SHEET	ZONE	SUBJECT	RESPONSIBLE	DUE
TBD 001	13	B7	FASTENER PART NO.	R. RENZULLI (MARTIN MARIETTA)	STRUCT. & MECH. CDR -2 MONTHS
TBD 002	13	B7	WASHER PART NO.	R. RENZULLI (MARTIN MARIETTA)	STRUCT. & MECH. CDR -2 MONTHS
TBD 003	13	B7	SHEAR PIN PART NO.	R. RENZULLI (MARTIN MARIETTA)	STRUCT. & MECH. CDR -2 MONTHS
TBD 004	13	B3	FASTENER DETAILS	R. RENZULLI (MARTIN MARIETTA)	STRUCT. & MECH. CDR -2 MONTHS
TBD 005	14	D5	CONNECTOR AREA	G. UYEHO (TRW)	CERES CDR +6 MOS.
TBD 006	15	E9	INSTRUMENT BLANKETS	G. UYEHO (TRW)	CERES CDR
TBD 007	15	E5	CLOSEOUT BLANKETS	D. CHALMERS (MARTIN MARIETTA)	S/C PDR -1 MO.
TBD 008	15	E5	THERMAL HARDWARE DEFINITION	G. UYEHO (TRW)	CERES CDR
TBD 009	16	D6	HOLE DIAMETER AND LOCATION	G. UYEHO (TRW)	CERES CDR
TBD 010	16	D9	FIXTURE ENVELOPE	G. UYEHO (TRW)	CERES CDR

TBR LOG

ITEM	SHEET	ZONE	SUBJECT	RESPONSIBLE	DUE
TBR 001	1	D4	FLATNESS	G. UYEHO (TRW)	CERES CDR
TBR 002	1	D4	PLANARITY	G. UYEHO (TRW)	CERES CDR

E 46671 20008821

SCALE N/A SHEET 17

20008821
30 August 1993

Next Assembly	Used on
20008820	EOS–AM

First Application
EOS–AM

Revisions		Rev	
Ltr	Description	Date	Approved
Initial Issue		3/31/93	CM/GSR

Revision Record Continued on Sheet _____

Contract No.	NAS5–32500
Written	N. Benko
Date	1/15/93
Approved	N. Koepp-Baker
Date	3/29/93
Approved	
Date	
Issued	G. Rauscher
Date	4/2/93

GE Astro Space

General Electric Company
East Windsor, N.J.
Valley Forge, Pa

Interface Control Drawing, Mechanical, Tables, Earth Observing System AM Spacecraft to Clouds and the Earth's Radiant Energy System

Size	Code Ident No.	
A	49671	20008822

PURPOSE

The Mechanical Interface Control Drawing (MICD) Tables, 20008822, when executed, in conjunctior tl the MICD Drawing, 20008821, represents an agreement of the detailed implementation of the mechanica interface between the Earth Observing System (EOS) AM Spacecraft and the Clouds and the Earth's Radiant Energy System (CERES). These two drawings, together with Thermal Interface Control Drawin (TICD), 20008823, the Electrical Interface Control Drawing (EICD) Schematic, 20008824, EICD Tables 20008825, Integration and Test Interface Control Drawing (I&T ICD), 20008826, and Command and Da Handling Interface Control Drawing (C&DH ICD), 20008827, describe the details of the interfaces betwee the EOS–AM Spacecraft and CERES. The top–level instrument Interface Control Drawing (ICD) 20008820, provides the instrument ICD tree and revision status for all sub–tier instrument ICDs.

SCOPE

The MICD Tables in conjunction with the MICD Drawings contain information necessary to develop th spacecraft configuration, for structural and mechanical studies, and during I&T for verification c installation and alignment. The MICD Tables describe the instrument mass properties, mechanisms, finit element model (FEM), flight and launch accountability kit items, and alignment data. The MICD Drawin contains the instrument component outline drawings; science and calibration fields of view; mountin electrical, and thermal hardware definition; and instrument ground support equipment attachment.

Approval Signatures

IN ADDITION TO ECN AND CCB APPROVALS,
ALL CHANGES ON THIS DRAWING SHALL HAVE THE APPROVAL AND THE FULL AGREEMEN OF THE PARTIES LISTED BELOW.

REV	Spacecraft Program Office	Date	Instrument Program Office	Date	Instrument Provider	Date	Principal Investi gator	Date
	(signature on file) J. Balch	2/4/93	(signature on file) J. Cooper	3/11/93	(signature on file) S. Carman	3/11/93	signature on file) B. Bark–strom	3/12/9

Size	Code Ident No.	
A	49671	20008822
		Sheet 2

Table of Contents

Section	Title	Sheet
	PURPOSE	2
	SCOPE	2
	Approval Signatures	2
	MICD TABLES	9

List of Figures

Figure No.	Title	Sheet
1	Coordinate System	10
2a	Mechanism Profiles – Main Aperture Cover	18
2b	Mechanism Profiles – Solar Calibration Aperture Cover	19
2c–1	Mechanism Profiles – Azimuth Gimbal – Biaixal Mode	20
2c–2	Mechanism Profiles – Azimuth Gimbal – Solar Calibration Mode	21
2d–1	Mechanism Profiles – Elevation Gimbal – Biaxial and Cross–Track Modes	22
2d–2	Mechanism Profiles – Elevation Gimbal – Solar Calibration Mode	23
2d–3	Mechanism Profiles – Elevation Gimbal – Short Scan (Solar Avoidance) Mode	24
2e–1	Mechanism Profiles – Azimuth Caging Brake Mechanism – Biaxial to Cross–Track Mode	25
2e–2	Mechanism Profiles – Azimuth Caging Brake Mechanism – Biaxial to Solar Calibration Mode	26

List of Tables

Table No.	Title	Sheet
I	Reference Coordinate Systems	10
IIa	Mass Properties – Launch/Stowed Configuration	11
IIb	Mass Properties – On–Orbit Configuration	12
IIIa	Mechanism Characteristics – Main Aperture Cover	13
IIIb	Mechanism Characteristics – Solar Calibration Aperture Cover	14
IIIc	Mechanism Characteristics – Azimuth Gimbal	15
IIId	Mechanism Characteristics – Elevation Gimbal	16
IIIe	Mechanism Characteristics – Azimuth Caging Brake Mechanism	17
IV	Finite Element Model	27
V	CERES Flight Items	28
VI	Launch Accountability Kit	29
VII	Alignment Data	30
VIII	Reference Documents	31

TBD LOG

ITEM	SECTION	PAGE	SUBJECT	RESPONSIBLE	DUE
TBD 001	Figure 1	10	Launch vehicle selection (3 places)	N. Benko (GE)	Launch vehicle announcement + 26 weeks
TBD 002	Table I	10	Launch vehicle coordinates of CERES–Fore (3 places)	N. Benko (GE)	Launch vehicle announcement +26 weeks
TBD 003	Table I	10	Launch vehicle coordinates of CERES–Aft (3 places)	N. Benko (GE)	Launch vehicle announcement +26 weeks
TBD 004	Table IIa Table IIb Table V	11 12 28	CERES Fore and Aft Serial Numbers (10 places)	G. Uyeno (TRW)	CERES Delivery – 32 wks
TBD 005	Table IIa Table IIb	11 12	Inertia matrix resolution (2 places)	G. Uyeno (TRW)	CERES CDR – 16 wks
TBR 006	Table IIIa	13	Main Aperture Cover Inertia	G. Uyeno (TRW)	CERES CDR – 16 wks
TBD 007	Table IIIa	13	Main aperture cover maximum impulse and amplitude (2 places)	L. Brumfield (LaRC)	CERES CDR – 26 wks
TBD 008	Table IIIa	13	Main aperture cover FEM node number	N. Benko (GE)	FEM Delivery + 4 wks
TBD 009	Table IIIb	14	Solar calibration aperture cover torque, maximum impulse and amplitude (3 places)	L. Brumfield (LaRC)	CERES CDR – 26 wks
TBD 010	Table IIIb	14	Solar calibration aperture cover FEM node number	N. Benko (GE)	FEM Delivery + 4 wks
TBD 011	Table IIIc	15	Azimuth gimbal torque, maximum impulse and amplitude (3 places)	L. Brumfield (LaRC)	CERES CDR – 26 wks
TBD 012	Table IIIc	15	Azimuth gimbal dynamic imbalance, static imbalance, and residual momentum	G. Uyeno (TRW)	CERES CDR – 16 wks
TBD 013	Table IIId	16	Elevation gimbal torque, maximum impulse and amplitude (3 places)	L. Brumfield (LaRC)	CERES CDR – 26 wks
TBD 014	Table IIIe	17	Azimuth caging brake maximum impulse and amplitude (2 places)	L. Brumfield (LaRC)	CERES CDR – 26 wks
TBD 015	Table IIIe	17	Azimuth caging brake FEM node number	N. Benko (GE)	FEM Delivery + 4 wks
TBD 016	Figure 2a	18	Main aperture cover disturbance profiles	L. Brumfield (LaRC)	CERES CDR – 26 wks

TBD LOG (cont'd)

ITEM	SECTION	PAGE	SUBJECT	RESPONSIBLE	DUE
TBD 017	Figure 2b	19	Solar calibration aperture cover disturbance profiles	L. Brumfield (LaRC)	CERES CDR – 26 wks
TBD 018	Figure 2c–2	21	Azimuth gimbal disturbance profiles – solar calibration mode	L. Brumfield (LaRC)	CERES CDR – 26 wks
TBD 019	Figure 2e–1	25	Azimuth caging brake disturbance profiles – biaxial to cross–track mode	L. Brumfield (LaRC)	CERES CDR – 26 wks
TBD 020	Figure 2e–2	26	Azimuth caging brake disturbance profiles – biaxial to solar calibration mode	L. Brumfield (LaRC)	CERES CDR – 26 wks
TBD 021	Table V	28	CERES flight items*	G. Uyeno (TRW)	CERES Delivery – 32 wks
TBD 022	Table VI	29	Launch Accountability Kit	G. Uyeno (TRW)	CERES Delivery – 32 wks
TBD 023	Table VII	30	Boresight to cube; cube to cube; cube to MR cube alignment offsets (9 places)	G. Uyeno (TRW)	CERES Delivery
TBD 024	Table VII	30	Cube to mounting plane and drill template alignment cube to template mounting plane alignment offsets (6 places)	G. Uyeno (TRW)	6–30–95

* Where the majority of the table information is TBD, the entire table has been identified as TBD in the table title. Table information will be filled in as it becomes available.

TBR LOG

ITEM	SECTION	PAGE	SUBJECT	RESPONSIBLE	DUE
TBR 001	Table IIb	12	On–orbit configuration mass properties	G. Uyeno (TRW)	CERES CDR – 16 wks
TBR 002	Table IIIb	14	Solar Calibration Aperture Cover Inertia	G. Uyeno (TRW)	CERES CDR – 16 wks
TBR 003	Table IIIc	15	Azimuth Gimbal Inertia	G. Uyeno (TRW)	CERES CDR – 16 wks
TBR 004	Table IIId	16	Elevation Gimbal Inertia	G. Uyeno (TRW)	CERES CDR – 16 wks
TBR 005	Table IIIe	17	Azimuth Caging Brake Inertia	G. Uyeno (TRW)	CERES CDR – 16 wks
TBD 006	Figure 2c–1	20	Azimuth gimbal disturbance profiles – Biaxial Mode	L. Brumfield (LaRC)	CERES CDR – 26 wks
TBD 007	Figure 2d–1	22	Elevation gimbal disturbance profiles – Biaxial and Cross–Track Modes	L. Brumfield (LaRC)	CERES CDR – 26 wks
TBD 008	Figure 2d–2	23	Elevation gimbal disturbance profiles – Solar Calibration Mode	L. Brumfield (LaRC)	CERES CDR – 26 wks
TBD 009	Figure 2d–3	24	Elevation gimbal disturbance profiles – Short Scan (Solar Avoidance) Mode	L. Brumfield (LaRC)	CERES CDR – 26 wks

MICD TABLES

1. The relationship among the instrument, spacecraft, and launch vehicle coordinate systems is shown pictorially in Figure 1.

2. The conversion among coordinate systems at the instrument origin is shown in Table I.

3. Launch and on–orbit configuration mass properties are shown in Tables IIa and IIb.

4. The CERES mechanisms are listed below. Mechanism characteristics are provided in Table III. Corresponding torque, linear force versus time, and angular momentum profiles are provided in Figure 2 identified by the same lower case alpha character.
   a. Main Aperture Cover
   b. Solar Calibration Aperture Cover
   c. Azimuth Gimbal
   d. Elevation Gimbal
   e. Azimuth Caging Brake Mechanism

5. The finite element model which will be used by both the Instrument and Spacecraft Providers is identified in Table IV.

6. The instrument and associated spacecraft flight items are listed in Table V.

7. The contents of the launch accountability kit are identified in Table VI for both flight and non–flight items.

   The launch accountability kit contains each item not installed prior to shipment to the launch site and which must be installed before flight. Space is allocated for each item which must be removed before flight. Thus the launch accountability kit provides the means to verify that all items which must be installed before flight have been installed and all items which must be removed before flight have been removed.

8. The alignment offset among the instrument boresight, all alignment cubes, and the instrument and drill template mounting plane and hole pattern is shown in Table VII.

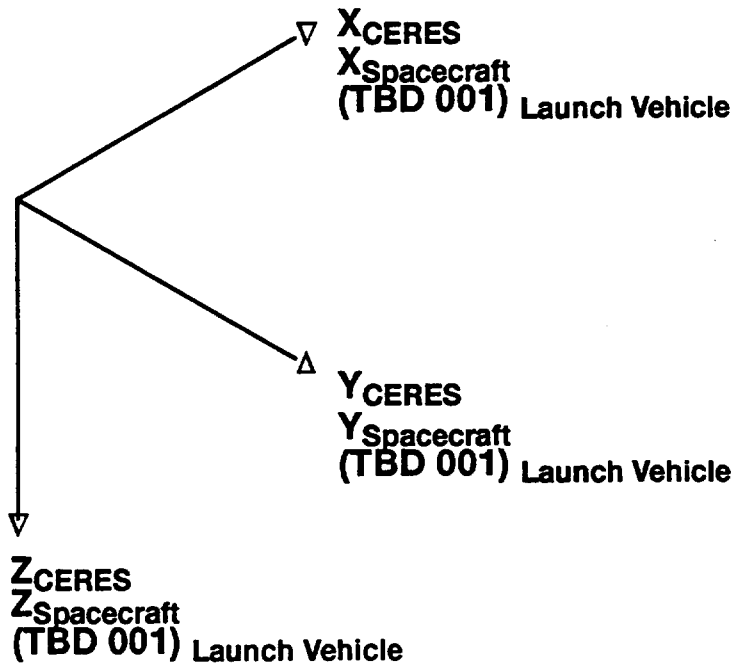

Figure 1. Coordinate System

Table I. Reference Coordinate Systems

Local Coordinate System	Coordinates (mm)		
CERES–Fore (see Note 1.)	$X_I =$ 0.00	$Y_I =$ 0.00	$Z_I =$ 0.00
Spacecraft	$X_{S/C} =$ 991.6	$Y_{S/C} =$ –598.4	$Z_{S/C} =$ 1174.1
Launch Vehicle	$X_{Launch\ Vehicle} =$ (TBD 002)	$Y_{Launch\ Vehicle} =$ (TBD 002)	$Z_{Launch\ Vehicle} =$ (TBD 002)
CERES–Aft (see Note 1.)	$X_I =$ 0.00	$Y_I =$ 0.00	$Z_I =$ 0.00
Spacecraft	$X_{S/C} =$ 244.6	$Y_{S/C} =$ 175.0	$Z_{S/C} =$ 1174.1
Launch Vehicle	$X_{Launch\ Vehicle} =$ (TBD 003)	$Y_{Launch\ Vehicle} =$ (TBD 003)	$Z_{Launch\ Vehicle} =$ (TBD 003)

Notes:

1. See 20008821, Sheet 1 for location of instrument origin.

Table IIa. Mass Properties – Launch/Stowed Configuration (See Note 2.)

	Mass (kg) (See Note 3.)	(%) (E)stimated (C)alculated (M)easured	Estimated Center of Mass (mm) (See Notes 3. & 4.)
CERES–Fore Serial No. (TBD 004)	37.53	46 E 54 C M	X = –3 Y = 195 Z = 280
CERES–Aft Serial No. (TBD 004)	37.53	46 E 54 C M	X = –3 Y = 195 Z = 280

	Estimated Inertia Matrix (kg–m^2) ± (TBD 005)% (See Notes 3. & 5.)		
CERES–Fore Serial No. (TBD 004)	I_{XX} = 1.35 I_{YX} = –0.01 I_{ZX} = –0.01	I_{XY} = –0.01 I_{YY} = 1.55 I_{ZY} = –0.02	I_{XZ} = –0.01 I_{YZ} = –0.02 I_{ZZ} = 0.85
CERES–Aft Serial No. (TBD 004)	I_{XX} = 1.35 I_{YX} = –0.01 I_{ZX} = –0.01	I_{XY} = –0.01 I_{YY} = 1.55 I_{ZY} = –0.02	I_{XZ} = –0.01 I_{YZ} = –0.02 I_{ZZ} = 0.85

Notes:

2. Launch/stowed configuration mass properties as of November 19, 1992.
3. Mass, center of mass, moments of inertia, and products of inertia in stowed configuration at end of life are the same as in launch/stowed configuration at beginning of life.
4. Center of mass is specified with respect to instrument origin. (See 20008821, Sheet 1)
5. Instrument moments and products of inertia are specified about axes parallel to the instrument axes and passing through the instrument center of mass.

Table IIb. Mass Properties – On–Orbit Configuration (See Notes 6. & 8.) (TBR 001)

	Mass (kg) (See Note 6.)	(%) (E)stimated (C)alculated (M)easured	Estimated Center of Mass (mm) (See Notes 4. & 7.)
CERES–Fore Serial No. (TBD 004)	37.53	46 E 54 C M	X = –3 Y = 195 Z = 280
CERES–Aft Serial No. (TBD 004)	37.53	46 E 54 C M	X = –3 Y = 195 Z = 280

	Estimated Inertia Matrix (kg–m^2) ± (TBD 005)% (See Notes 5. & 7.)		
CERES–Fore Serial No. (TBD 004)	I_{XX} = 1.35 I_{YX} = –0.01 I_{ZX} = –0.01	I_{XY} = –0.01 I_{YY} = 1.55 I_{ZY} = –0.02	I_{XZ} = –0.01 I_{YZ} = –0.02 I_{ZZ} = 0.85
CERES–Aft Serial No. (TBD 004)	I_{XX} = 1.35 I_{YX} = –0.01 I_{ZX} = –0.01	I_{XY} = –0.01 I_{YY} = 1.55 I_{ZY} = –0.02	I_{XZ} = –0.01 I_{YZ} = –0.02 I_{ZZ} = 0.85

Notes:

6. On–orbit (all covers open) configuration mass properties as of November 19, 1992.
7. Mass, center of mass, moments of inertia, and products of inertia in on–orbit configuration at end of life are the same as in on–orbit configuration at beginning of life.
8. On–orbit configuration consists of nominal cross–track mode with Main Aperture Cover open, Solar Aperture Cover open, and Azimuth brake applied.

Table IIIa. Mechanism Characteristics – Main Aperture Cover

Location	See 20008821 Sheet 2
Operation	Open position for all science and calibration modes; closed position for launch/early orbit; re–closed on orbit for protection against high contamination conditions. Actuated by stepper motor with 60:1 reduction driving leadscrew to produce translational cover motion.
Mass being moved (kg) (M)easured, (C)alculated, (E)stimated	0.2966 ± 0.05 kg (C)
Inertia (kg–m^2)	(See Note 9.) **(TBD 006)**
Cycle duration (sec)	3360 sec (See Note 10.)
Maximum impulse (N–m–sec)	**(TBD 007)**
Step frequency (sec)	100 steps/sec
Amplitude	**(TBD 007)**
Finite element model node number	**(TBD 008)**
Mechanism profiles	See Figure 2a

Notes:

9. Two halves of cover move simultaneously in opposite directions.
10. Cycle duration defined as time required to open cover from closed position or close cover from open position.

Table IIIb. Mechanism Characteristics – Solar Calibration Aperture Cover

Location	See 20008821 Sheet 2
Operation	Open position for all science and calibration modes; closed position for launch/early orbit; re–closed on orbit for protection against high contamination conditions. Actuated by stepper motor with 80:1 reduction driving cover pivot shaft.
Mass being moved (kg) (M)easured, (C)alculated, (E)stimated	0.089 ± 0.05 kg (C)
Axis of rotation	X axis (See Note 11.)
Center of mass about point of rotation (with respect to instrument origin) (mm) (M)easured, (C)alculated, (E)stimated	X= 0.0 (C) Y= 13.88 (C) Z= 377.63 (C)(See Note 12.)
Inertia (kg–m^2)	3.034 x 10^{-4} **(TBR 002)**
Torque (N–m)	**(TBD 009)**
Cycle duration (sec)	45 sec (See Note 13.)
Maximum impulse (N–m–sec)	**(TBD 009)**
Step frequency (sec)	100 steps/sec
Amplitude	**(TBD 009)**
Finite element model node number	**(TBD 010)**
Mechanism profiles	See Figure 2b

Notes:

11. The solar calibration aperture cover rotation axis is always parallel to the Instrument/Spacecraft mounting surface. It is parallel to the X axis during normal cross–track scan.
12. Reported at closed position.
13. Cycle duration defined as time required to open cover from closed position or close cover from open position.

Table IIIc. Mechanism Characteristics – Azimuth Gimbal

Location	Between pedestal assembly and optical sensor head.
Operation	Caged for launch, safe mode and survival; stationary for solar calibration and cross–track mode; continuous for biaxial mode. Brief operations when achieving cross–track and solar calibration orientation.
Mass being moved (kg) (M)easured, (C)alculated, (E)stimated	17.654 ± 0.05 kg (C)
Axis of rotation	Z axis
Center of mass about point of rotation (with respect to instrument origin) (mm) (M)easured, (C)alculated, (E)stimated	X= –6.94 (C) Y= 195.47 (C) Z= 421.87 (C)
Inertia (kg–m^2)	2.71 x 10^{-1} **(TBR 003)**
Torque (N–m)	**(TBD 011)**
Cycle duration (sec)	30–45 sec (See Note 14.)
Maximum impulse (N–m–sec)	**(TBD 011)**
For continuously rotating parts **Dynamic Imbalance (kg–mm^2)** **Static Imbalance (kg–mm)** **Residual Momentum (N–m–sec)**	**(TBD 012)**
Step frequency (sec)	Steady–state rate in range of 4–6 deg/sec including endpoints. Rate is ground commandable in 0.1 deg/sec increments.
Amplitude	**(TBD 011)**
Finite element model node number	CERES–Fore – 350415 CERES–Aft – 351415
Mechanism profiles	See Figure 2c–1 and 2c–2

Notes:

14. Cycle duration defined as time required for azimuth gimbal to rotate 180 degrees, from one endpoint to the opposite endpoint of the scan range.

Table IIId. Mechanism Characteristics – Elevation Gimbal

Location	Between pedestal assembly and optical sensor head.
Operation	Caged for launch, safe mode, and survival. Continuous operation for all other modes.
Mass being moved (kg) (M)easured, (C)alculated, (E)stimated	1.554 ± 0.05 kg (C)
Axis of rotation	X axis (See Note 15.)
Center of mass about point of rotation (with respect to instrument origin) (mm) (M)easured, (C)alculated, (E)stimated	X= 19.52 (C) Y= 188.22 (C) Z= 475.99 (C) (See Note 16.)
Inertia (kg–m^2)	1.53 x 10^{-3} **(TBR 004)**
Torque (N–m)	**(TBD 013)**
Cycle duration (sec)	6.6 sec (See Note 17.)
Maximum impulse (N–m–sec)	**(TBD 013)**
Step frequency (sec)	63.5047 deg/sec (Slew 255.496 deg/sec)
Amplitude	**(TBD 013)**
Finite element model node number	CERES–Fore – 350420 CERES–Aft – 351420
Mechanism profiles	See Figure 2d–1, 2d–2, and 2d–3

Notes:

15. The elevation gimbal rotation axis is always parallel to the Instrument/Spacecraft mounting surface. It is parallel to the X axis during normal cross–track scan.
16. In nominal cross–track mode.
17. Cycle duration defined as time interval between a positional point and return to the same positional point on a scan position vs. time profile.

Table IIIe. Mechanism Characteristics – Azimuth Caging Brake

Location	Between pedestal assembly and optical sensor head.
Operation	The azimuth brake/caging pawl assembly is rotated by a stepper motor actuator with 80:1 reduction to engage or release either the brake or the caging pawl. The assembly is in the caged position for launch and early on orbit. It is rotated to the free position for any type of azimuth motion and rotated to the brake position for any inflight operation requiring stationary azimuth operation such as cross–track scan or solar calibration. Actuator detent torque holds the brake/pawl assembly in any of the three positions without actuator power.
Mass being moved (kg) (M)easured, (C)alculated, (E)stimated	0.590 ± 0.05 kg (C)
Axis of rotation	Z axis
Center of mass about point of rotation (with respect to instrument origin) (mm) (M)easured, (C)alculated, (E)stimated	X= 0.0 (C) Y= 327.76 (C) Z= 242.69 (C)
Inertia (kg–m^2)	2.43 x 10^{-4} **(TBR 005)**
Cycle duration (sec)	1.6 sec (See Note 18.)
Maximum impulse (N–m–sec)	**(TBD 014)**
Step frequency (sec)	100 steps/sec
Amplitude	**(TBD 014)**
Finite element model node number	**(TBD 015)**
Mechanism profiles	See Figure 2e–1 and 2e–2

Notes:

18. Cycle duration defined as the time required to rotate the brake/caging pawl assembly from one position to an adjacent position in the three–position range.

(TBD 016)

Figure 2a. Mechanism Profiles – Main Aperture Cover

Size	Code Ident No.	
A	49671	20008822
		Sheet 18

(TBD 017)

Figure 2b. Mechanism Profiles – Solar Calibration Aperture Cover

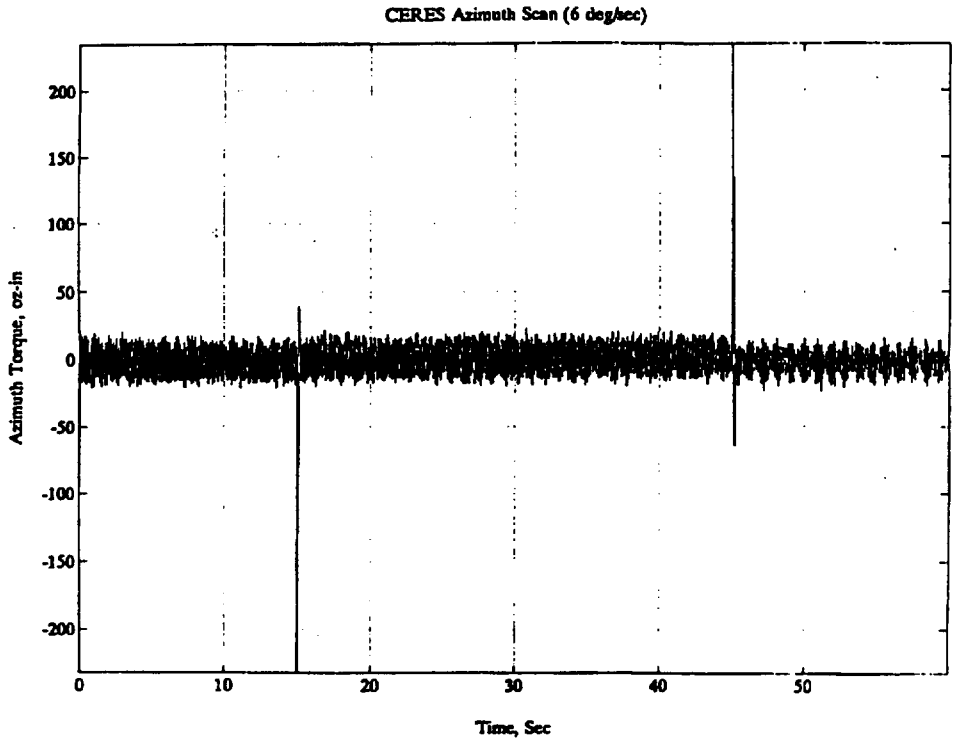

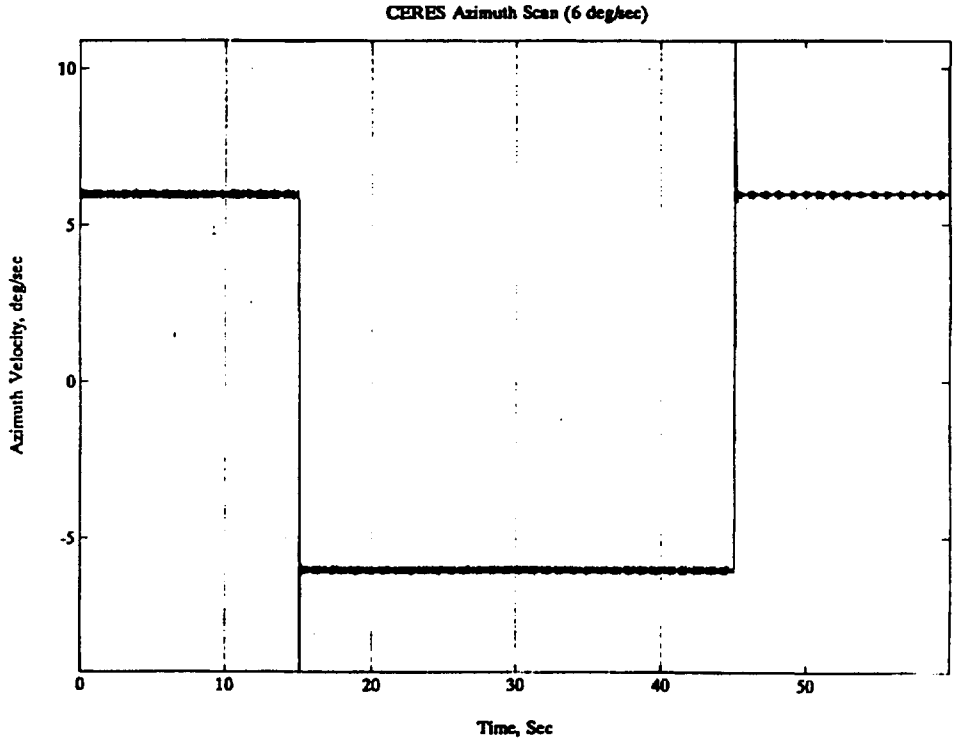

Figure 2c–1. Mechanism Profiles – Azimuth Gimbal – Biaxial Mode (TBR 006)

(TBD 018)

Figure 2c–2. Mechanism Profiles – Azimuth Gimbal – Solar Calibration Mode

Size	Code Ident No.	
A	49671	20008822
		Sheet 21

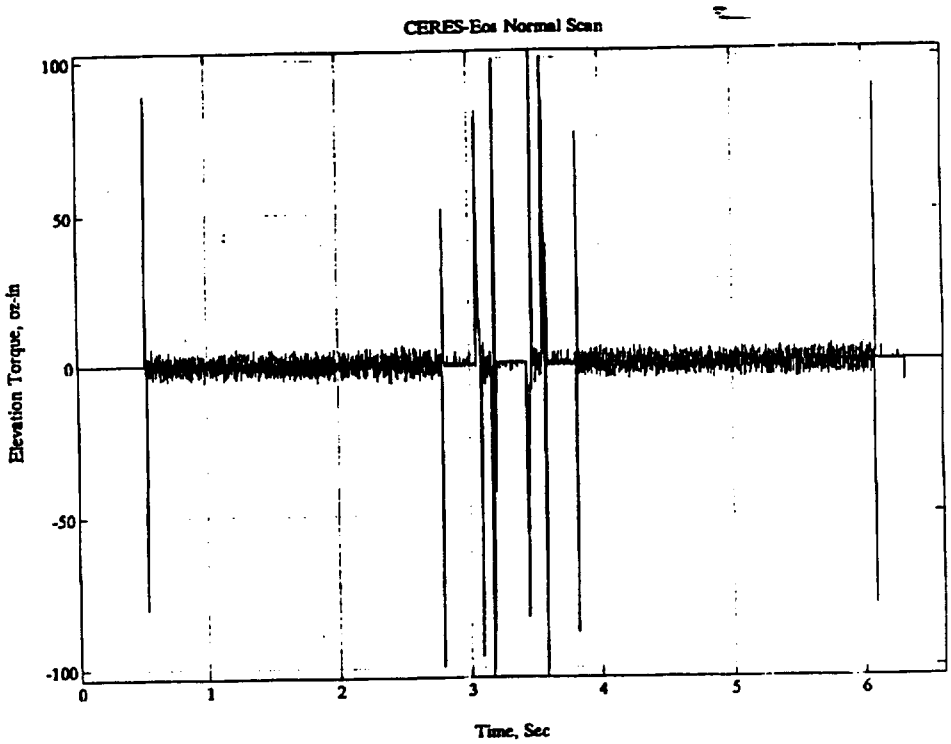

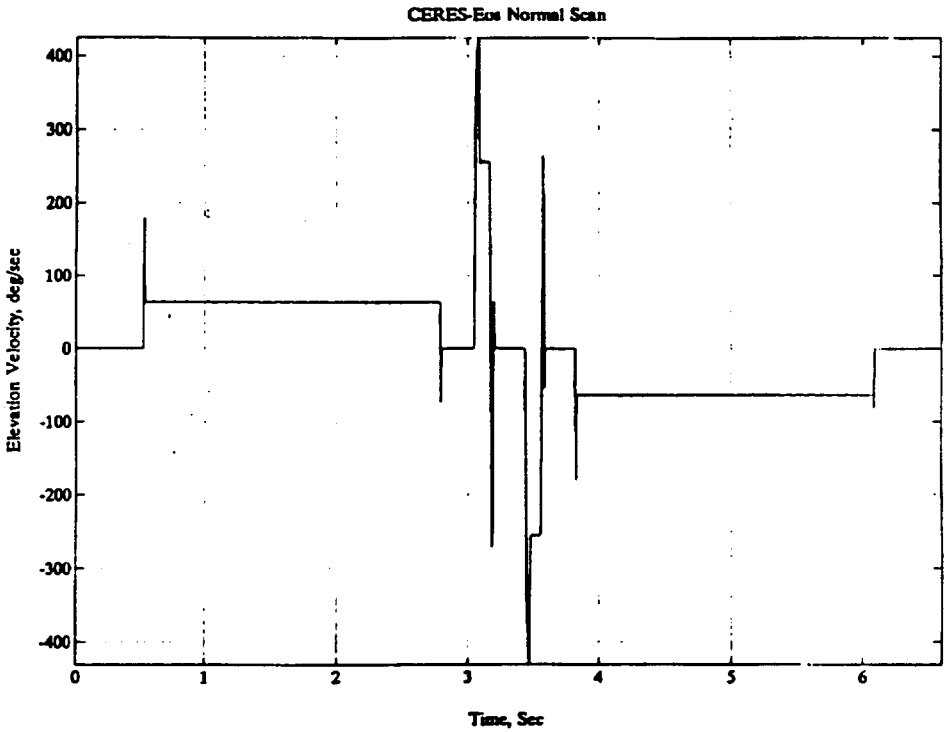

Figure 2d–1. Mechanism Profiles – Elevation Gimbal – Biaxial and Cross–Track Mode (TBR 007)

Size	Code Ident No.	
A	49671	20008822
		Sheet 22

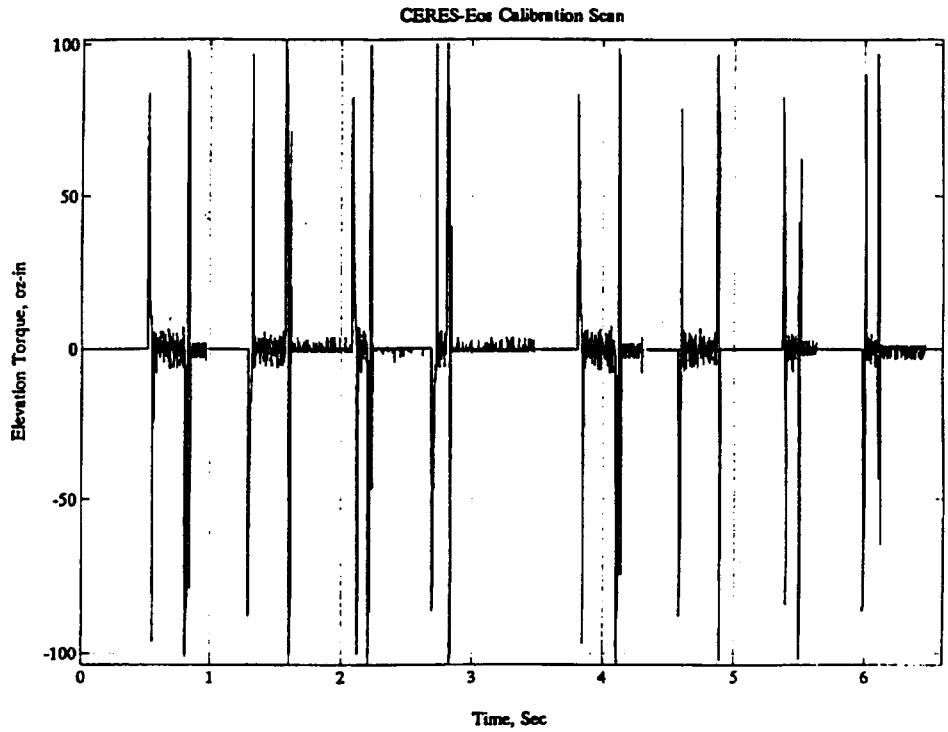

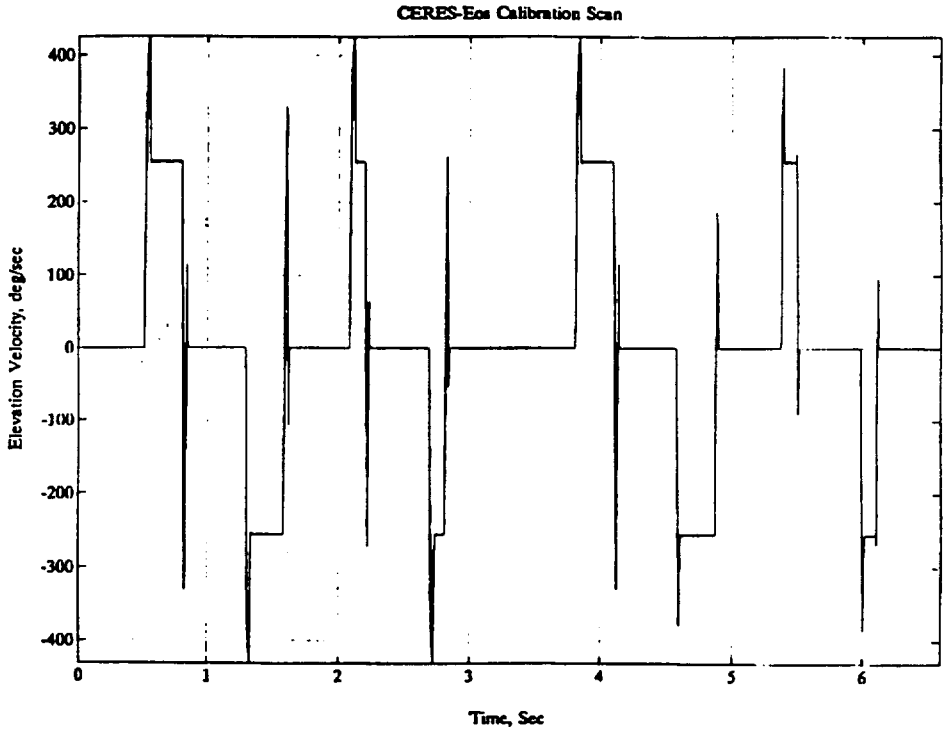

Figure 2d–2. Mechanism Profiles – Elevation Gimbal – Solar Calibration Mode (TBR 008)

Size	Code Ident No.	
A	49671	20008822
		Sheet 23

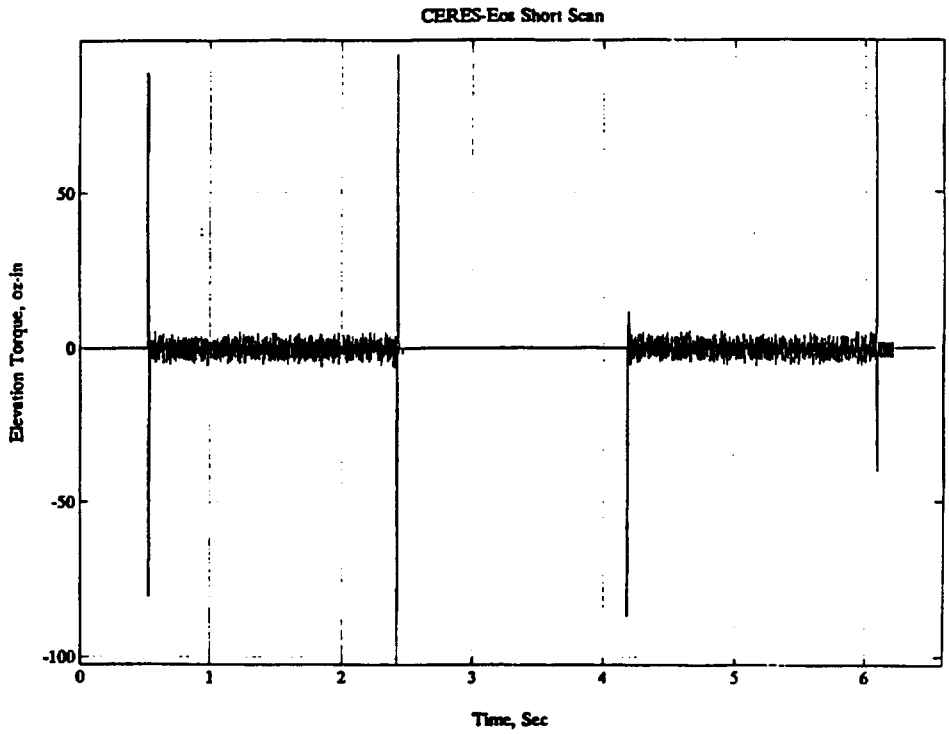

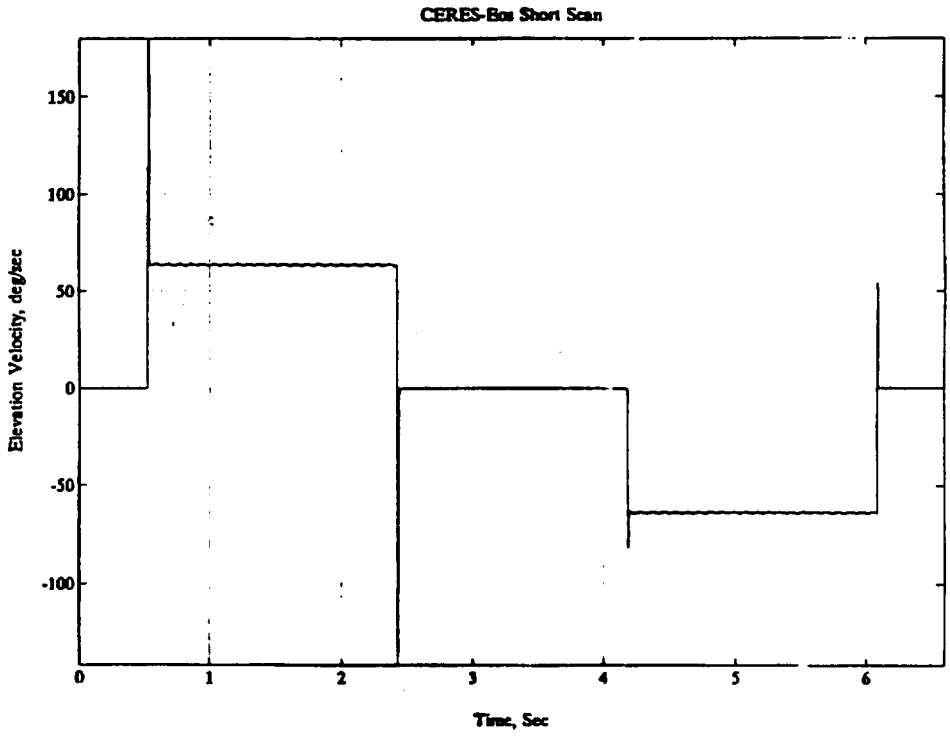

Figure 2d–3. Mechanism Profiles – Elevation Gimbal – Short Scan (Solar Avoidance) Mode (TBR 009)

Size	Code Ident No.	
A	49671	20008822
		Sheet 24

(TBD 019)

Figure 2e–1. Mechanism Profiles – Azimuth Caging Brake – Biaxial/Cross–Track Mode

Size	Code Ident No.	
A	49671	20008822
		Sheet 25

(TBD 020)

Figure 2e–2. Mechanism Profiles – Azimuth Caging Brake – Biaxial/Solar Calibration Mode

Table IV. Finite Element Model

	Revision			
	Preliminary	1st Revision		
Date	2/28/92			
File name	CERES_USFBDA.DAT			
Grid/Element/ Property ID Range	350,001 to 354,999			
Coordinate ID Range	676 to 699			
First Mode Frequency (Hz)	114.18 Hz			

Table V. CERES Flight Items* (TBD 021)

Item	Part No.	Supplier	Qty
CERES – Fore	(TBD 004)	TRW	1
CERES – Aft	(TBD 004)	TRW	1

* Where the majority of the table information is TBD, the entire table has been identified as TBD in the table title. Table information will be filled in as it becomes available.

Table VI. Launch Accountability Kit (TBD 022)

Item	Drawing #	Flight	Non–Flight

Table VII. Alignment Data

From	TO	Alignment Offset (arc–second) (see Note 19.)		
		θ_X	θ_Y	θ_Z
Instrument Boresight	Instrument Alignment Cube	(TBD 023)	(TBD 023)	(TBD 023)
Instrument Alignment Cube	Instrument Interface Cube	(TBD 023)	(TBD 023)	(TBD 023)
Instrument Interface Cube	Spacecraft Master Reference Cube	(TBD 023)	(TBD 023)	(TBD 023)
Instrument Alignment Cube	Instrument Mounting Plane & Hole Pattern	(TBD 024)	(TBD 024)	(TBD 024)
Drill Template Alignment Cube	Drill Template Mounting Plane & Hole Pattern	(TBD 024)	(TBD 024)	(TBD 024)

Notes:

19. Entries are offsets between the nominal instrument and spacecraft axes as defined in Figure 1.

Table VIII. Reference Documents*

Document Number	Date	Document Title	Source

* Table information will be filled in as required.

(This page intentionally left blank.)

Next Assembly	Used on
20008820	EOS–AM

First Application
EOS–AM

Revisions		Rev	
Ltr	Description	Date	Approve
Initial Issue		8/2/93	CM/GSF

Revision Record Continued on Sheet _____

Contract No. NAS5–32500	MARTIN MARIETTA	Martin Marietta Astro Space East Windsor, NJ Valley Forge, PA
Written N. Benko N. Benko Date 6/3/93	Interface Control Drawing, Thermal, Earth Observing System AM Spacecraft to Clouds and the Earth's Radiant Energy System	
Approved F. Komro Date 8-3-93		
Approved Date	Size A	Code Ident No. 49671 — 20008823
Issued G. Rauscher Date 8/3/93		Sheet 1 of 34

PURPOSE

The Thermal Interface Control Drawing (TICD), 20008823, when executed, represents an agreement of the detailed implementation of the thermal interface between the Earth Observing System (EOS) AM Spacecraft and the Clouds and the Earth's Radiant Energy System (CERES). This drawing, together with the Mechanical Interface Control Drawing (MICD) Drawing, 20008821; MICD Tables, 20008822; Electrical Interface Control Drawing (EICD) Schematic, 20008824; EICD Tables, 20008825; Integration and Test Interface Control Drawing (I&T ICD), 20008826; and Command and Telemetry Interface Control Drawing (C&T ICD), 20008827; describe the details of the interfaces between the EOS–AM Spacecraft and CERES. The top–level instrument Interface Control Drawing (ICD), 20008820, provides the instrument ICD tree and revision status for all sub–tier instrument ICDs.

SCOPE

The TICD contains information on surface properties, thermal model analysis cases, power dissipation, thermal control, and temperature limits for use in instrument and spacecraft thermal design and validation of the spacecraft accommodation of the instrument thermal environment.

Approval Signatures

IN ADDITION TO ECN AND CCB APPROVALS, ALL CHANGES ON THIS DRAWING SHALL HAVE THE APPROVAL AND THE FULL AGREEMENT OF THE PARTIES LISTED BELOW.

REV	Spacecraft Program Office	Date	Instrument Program Office	Date	Instrument Provider	Date	Principal Investi–gator	Date
	(signature on file) M. Kavka	6/21/93	(signature on file) J. Cooper	7/20/93	(signature on file) S. Carman	7/20/93	(signature on file) B. Bark–strom	7/20/9

Size	Code Ident No.	
A	49671	20008823
		Sheet 2

Table of Contents

Section	Title	Sheet
	PURPOSE	2
	SCOPE	2
	Approval Signatures	2
1	THERMAL DESCRIPTION	8
1.1	CERES Thermal Design Description	8
1.2	Thermal Interface Description	8
2	REDUCED THERMAL MODELS	20
2.1	Reduced Thermal Model Analysis Cases	20
2.1.1	Analysis Case 1 – End of Life Science Mode	20
2.1.2	Analysis Case 2 – Beginning of Life Science/Standby Mode	20
2.1.3	Analysis Case 3 – Beginning of Life Survival Mode	21
2.1.4	Analysis Case 4 – Orbit Acquisition and Initialization	21
2.1.5	Analysis Case 5 – End of Life Sun–Pointing Safe Mode	21
2.1.6	Analysis Case 6 – Beginning of Life Sun–Pointing Safe Mode	22
2.1.7	Analysis Case 7 – Orbital Acquisition and Initialization Sun–Pointing Safe Mode	22
2.2	Power Dissipation	22
3	THERMAL CONTROL	28

List of Figures

Figure No.	Title	Sheet
1	Thermal Design Features	9
2a	Optical Head Radiator Thermal Fields of View	10
2b	Pedestal Radiator Thermal Fields of View	11
2c	Optics Spindle Thermal Fields of View	12
3a	Thermal Fields of View Accommodation	13
3b	Thermal Fields of View Accommodation	14
4	Surface Designations	15
5	Heater and Sensor Locations	31

List of Tables

Table No.	Title	Sheet
Ia	Surface Properties – CERES–Fore	16
Ib	Surface Properties – CERES–Aft	18
II	Reduced Thermal Models	23
IIIa	Test Case Temperature Predictions – CERES–Fore	24
IIIb	Test Case Temperature Predictions – CERES–Aft	25
IVa	Power Dissipation – CERES–Fore	26
IVb	Power Dissipation – CERES–Aft	27
Va	Temperature Control – CERES–Fore	29
Vb	Temperature Control – CERES–Aft	30
VIa	Temperature Limits – CERES–Fore	32
VIb	Temperature Limits – CERES–Aft	33
VII	Reference Documents	34

TBD LOG

ITEM	SECTION	PAGE	SUBJECT	RESPONSIBLE	DUE
TBD 001	Table Ia Table1b	16 18	Calculated Surface Areas – CERES–Fore and CERES–Aft	B. Killough (LaRC)	S/C PDR – 6wks
TBD 002	Table IVa Table IVb	26 27	Detailed Model Electrical Dissipation and Heater Power – CERES–Fore and CERES–Aft	B. Killough (LaRC)	CERES CDR – 10 wks
TBD 003	Table Va Table Vb	29 30	Temperature Control Device Location – CERES–Fore and CERES–Aft	B. Killough (LaRC)	CERES CDR + 6 wks
TBD 004	Table Va Table Vb	29 30	Temperature Control Device Rated Power and Specified Voltage – CERES–Fore and Aft	B. Killough (LaRC)	CERES CDR +6wks
TBD 005	Figure 5	31	Heater and Sensor Locations	B. Killough (LaRC)	CERES CDR +6 wks
TBD 006	Table VIa Table VIb	32 33	Temperature Limits – CERES–Fore and CERES–Aft	B. Killough (LaRC)	CERES CDR +6 wks

TBR LOG

ITEM	SECTION	PAGE	SUBJECT	RESPONSIBLE	DUE
TBR 001	Section 2	20	View factors and radiator predicts assuming Earth Sensors on the plate	A. Trehan (MMC)	S/C PDR

1 THERMAL DESCRIPTION

1.1 CERES Thermal Design Description

CERES is comprised of two identical instruments mounted to a plate on Bay 1 of the Spacecraft. The primary method of heat rejection and thermal control of CERES is via silver Teflon radiators on the +X, –X, and +Y sides of the pedestal; on the +X and –X sides (in caged position) of the optical head; and on the +Z side of the optical head. The remainder of the surfaces are blanketed with aluminized Teflon multi–layer insulation (MLI). Thermal control within CERES is provided via heaters which maintain the internal temperature within limits. Temperature sensors monitor both internal and external temperatures.

The physical thermal design features are shown in Figure 1; thermal Fields of View (FOV) which went into making up the instrument geometric model are shown in Figures 2a, 2b, and 2c; resulting thermal FoV accommodation is shown in Figure 3a and 3b; the Thermal Radiation Analyzer System (TRASYS) model surfaces are shown in Figure 4; and thermo–optical properties of the TRASYS model surfaces are listed in Table I.

1.2 Thermal Interface Description

The CERES instrument utilizes four titanium isolator mounts to thermally isolate the instrument from the EOS–AM Spacecraft. The thermal isolators are placed between the instrument baseplate and the instrument mounting plate, which connects to the Spacecraft mounting plate. These isolators are designed to maintain conductive heat transfer to the limit of 15.5 watts per square meter across the interface. Based on a CERES footprint of 0.1625 square meters, this equates to a maximum conductive heat transfer of 2.52 watts during normal Spacecraft operation. MLI blanketing between the CERES baseplate and the mounting plate keeps radiative heat transfer to a minimum.

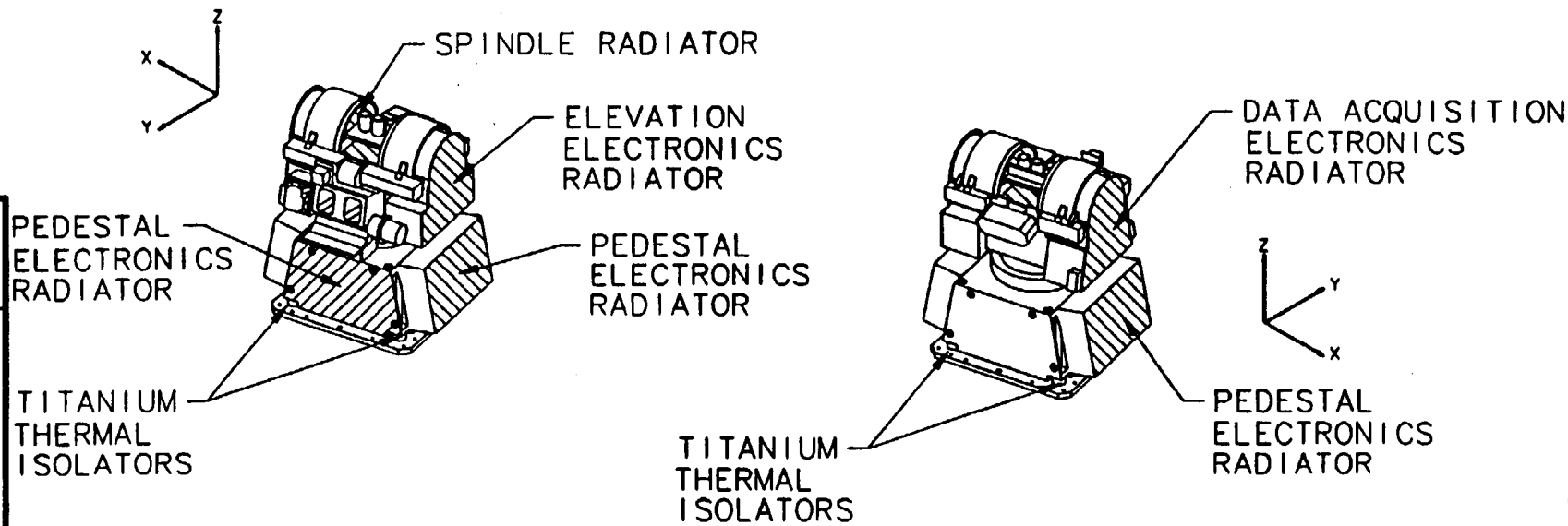

Notes:

1. All unmarked surfaces are Multi–Layer Insulation (MLI).

Figure 1. Thermal Design Features

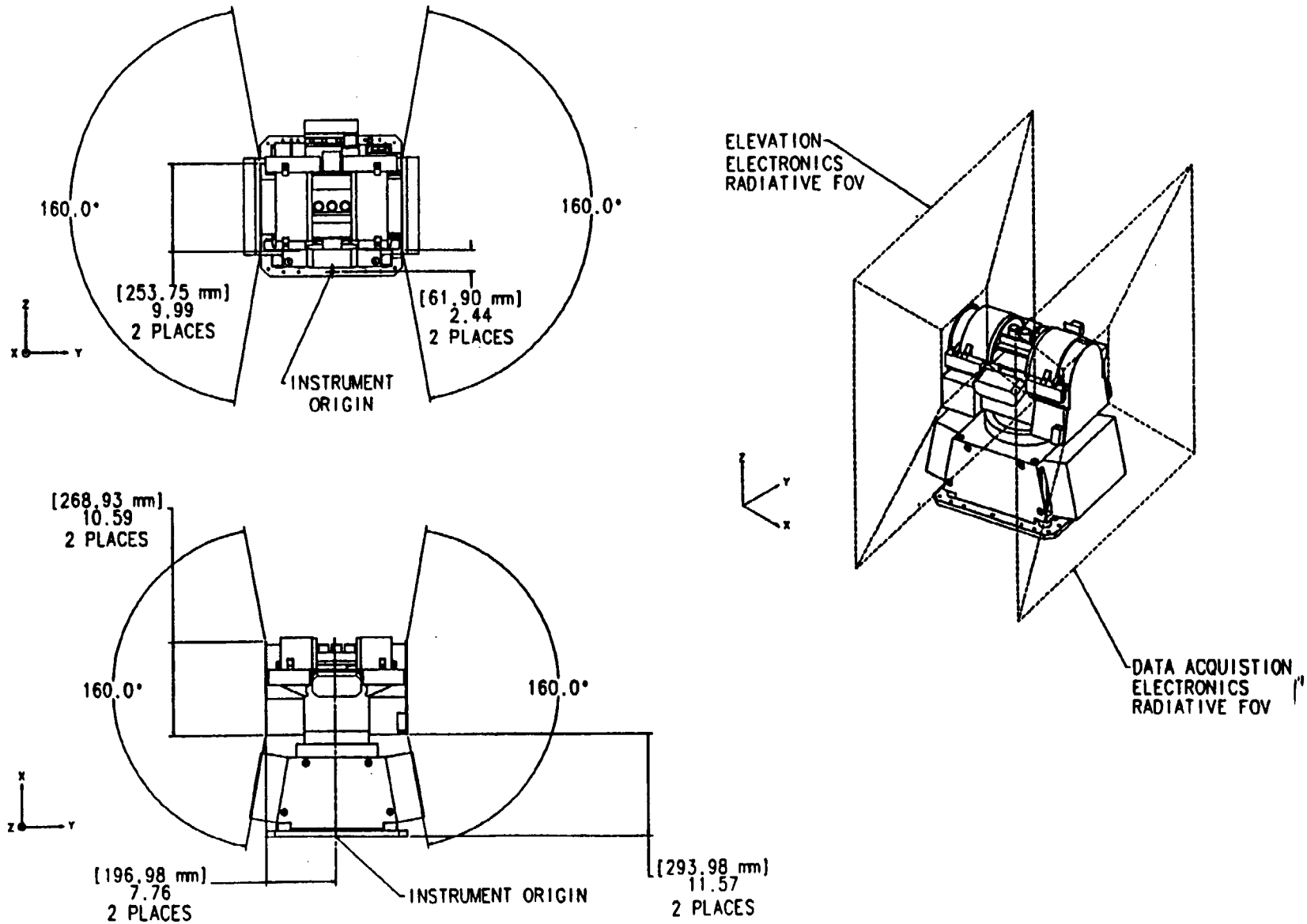

Figure 2a. Optical Head Radiator Thermal Fields of View

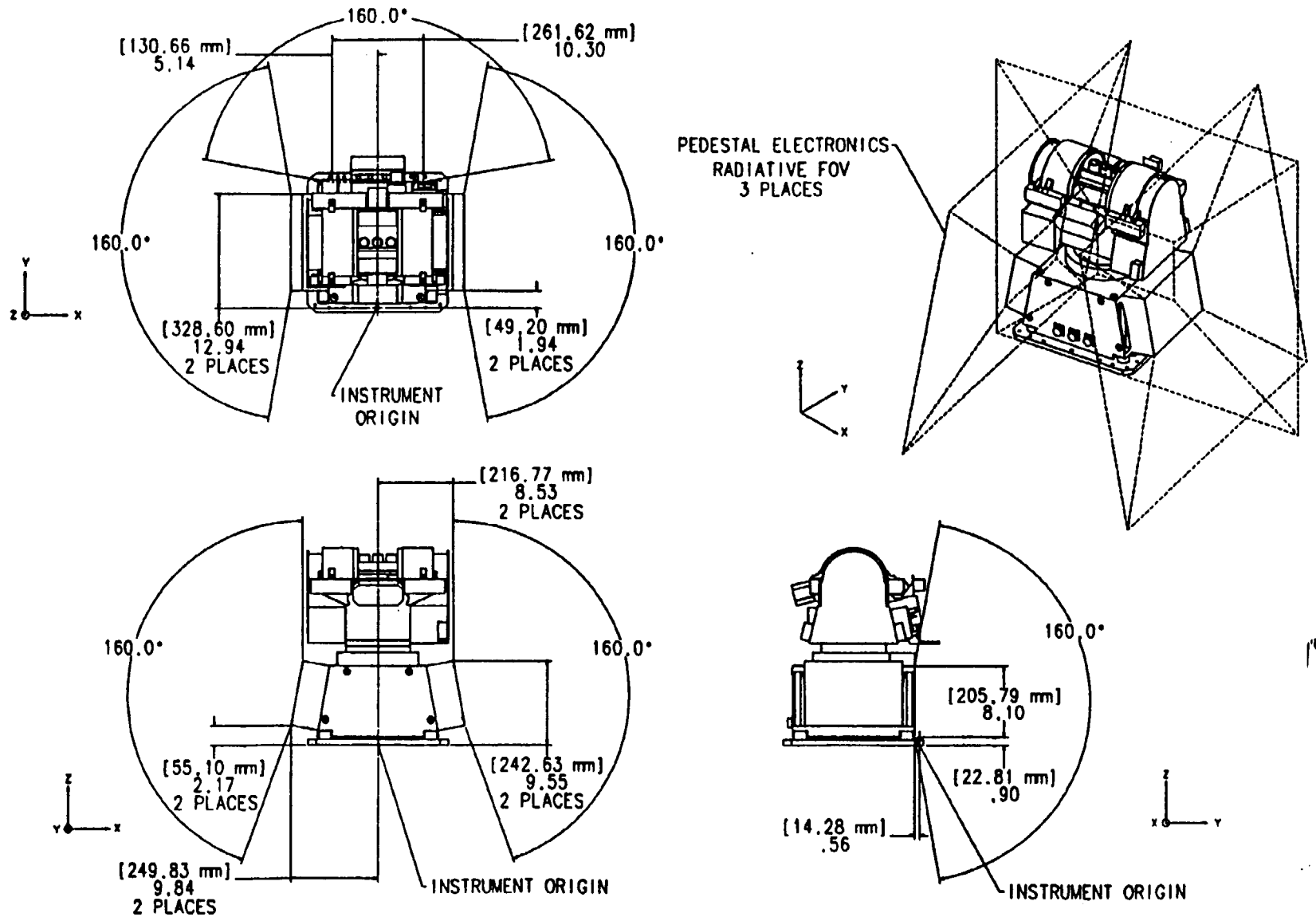

Figure 2b. Pedestal Radiator Thermal Fields of View

Size A
Code Ident No. 49671
20008823
Sheet 11

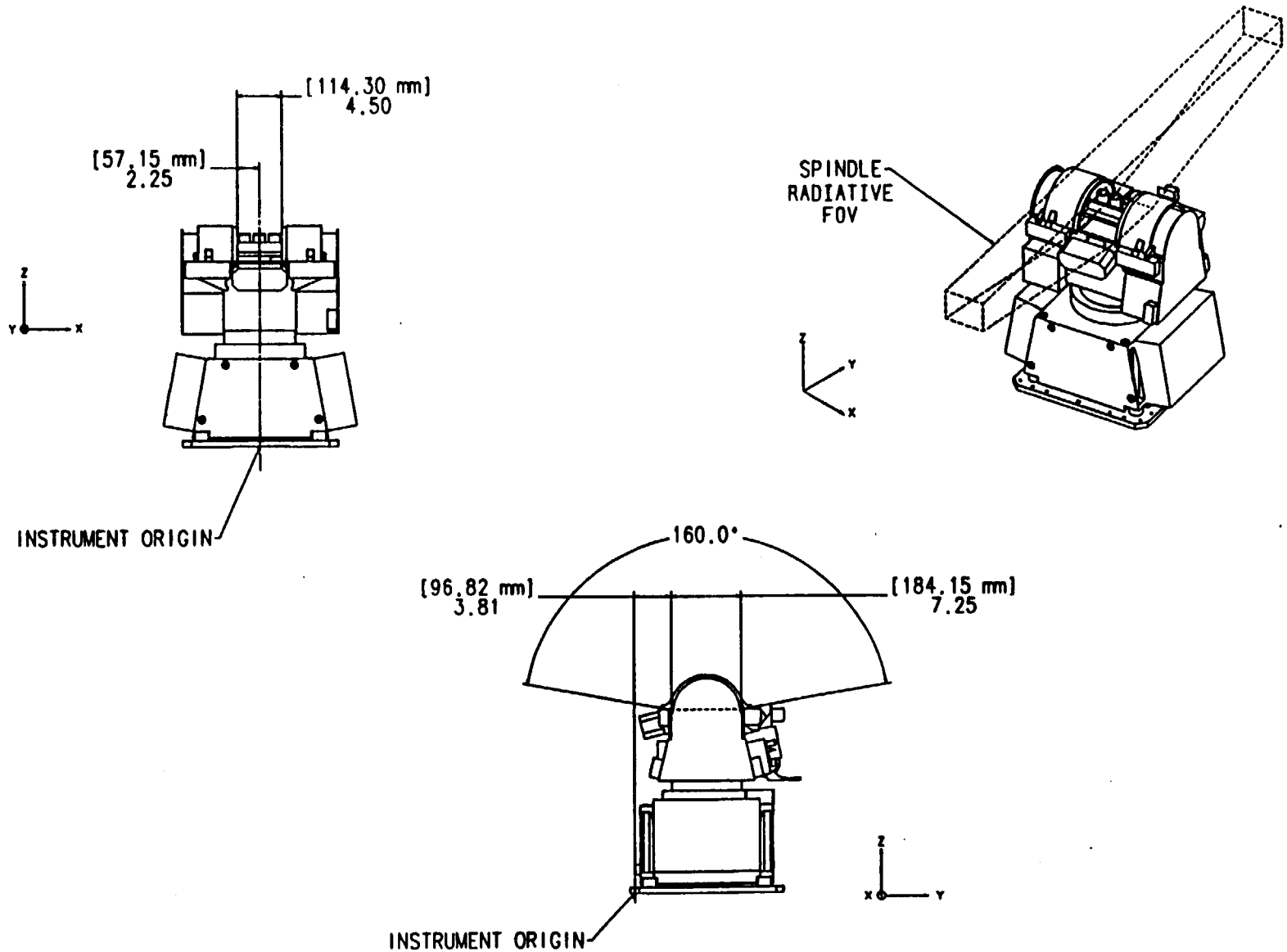

Figure 2c. Optics Spindle Thermal Field of View

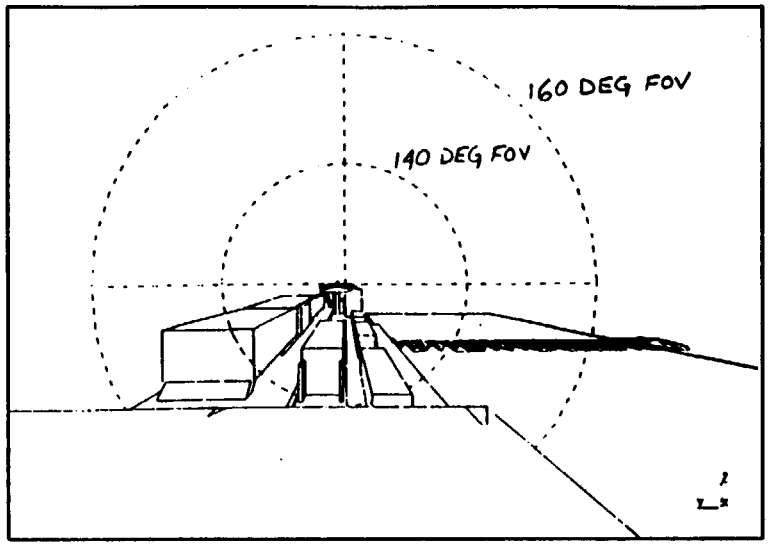

CERES–Fore – Data Acquisition Electronics Radiator

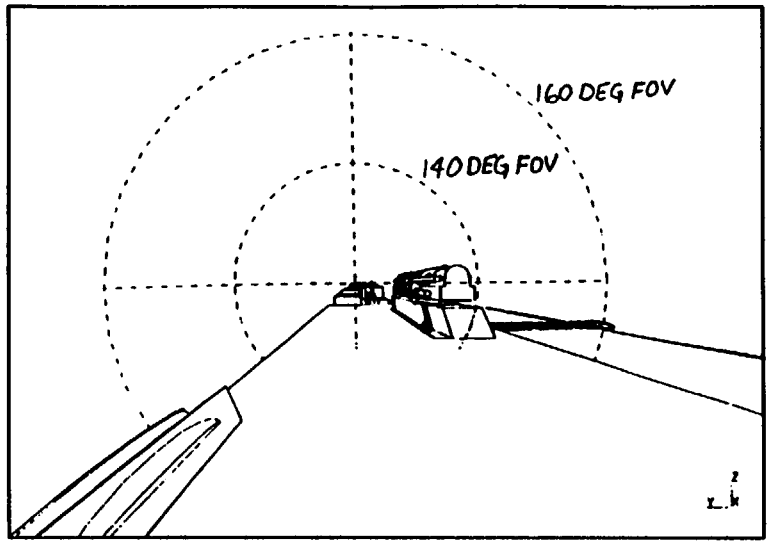

CERES–Aft – Data Acquisition Electronics Radiator

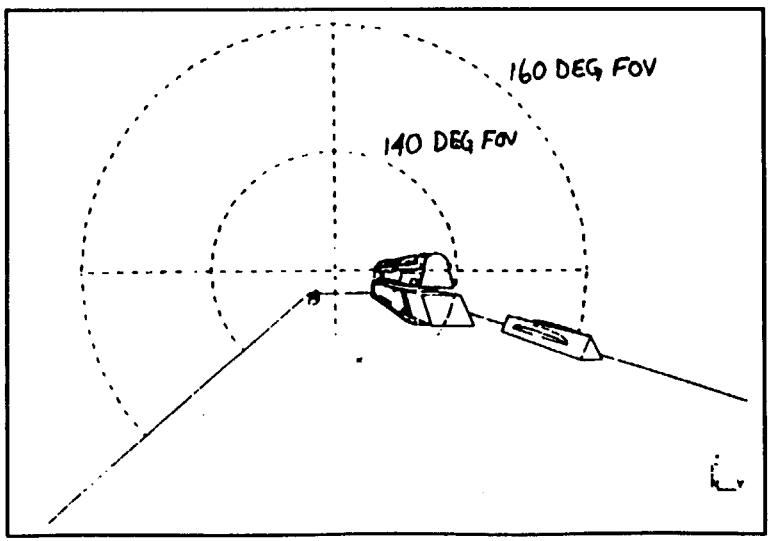

CERES–Fore – Elevation Electronics Radiator

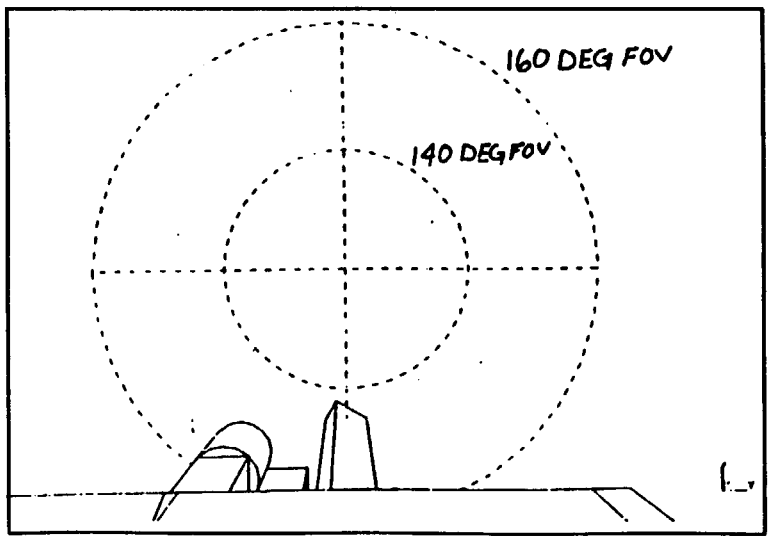

CERES–Aft – Elevation Electronics Radiator

Figure 3a. Thermal Fields of View Accommodation

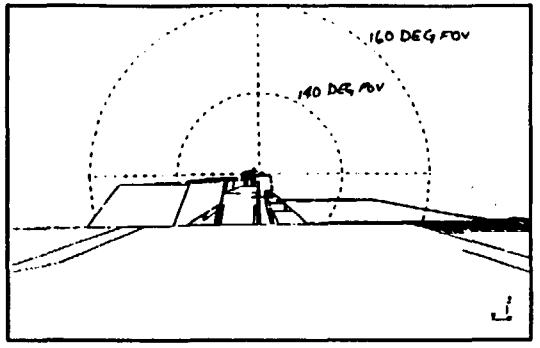

CERES–Fore
+X Pedestal Electronics Radiator

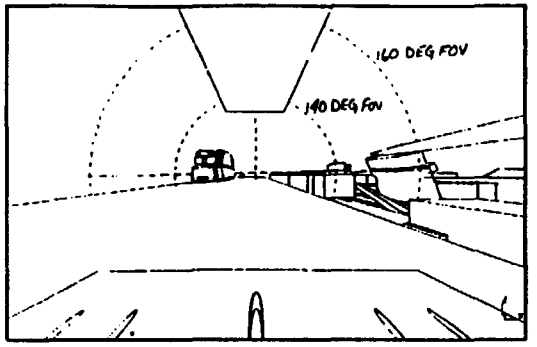

CERES–Fore
+Y Pedestal Electronics Radiator

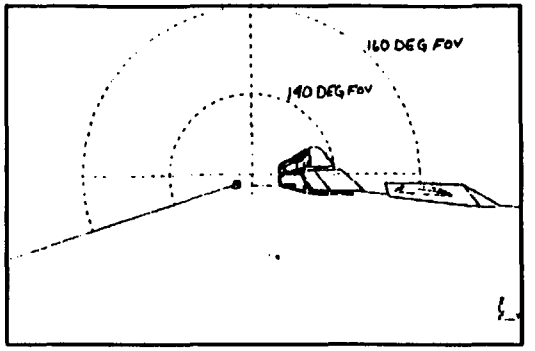

CERES–Fore
–X Pedestal Electronics Radiator

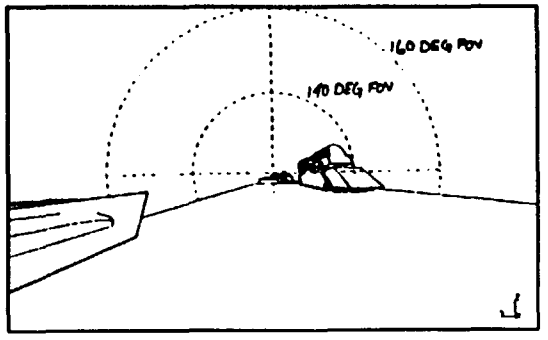

CERES–Aft
+X Pedestal Electronics Radiator

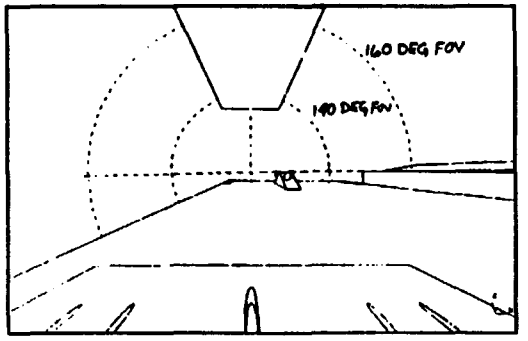

CERES–Aft
+Y Pedestal Electronics Radiator

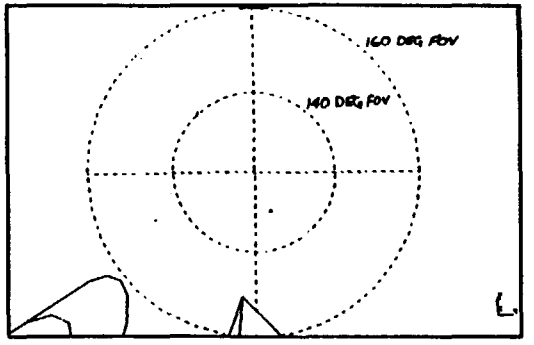

CERES–Aft
–X Pedestal Electronics Radiator

Figure 3b. Thermal Fields of View Accommodation

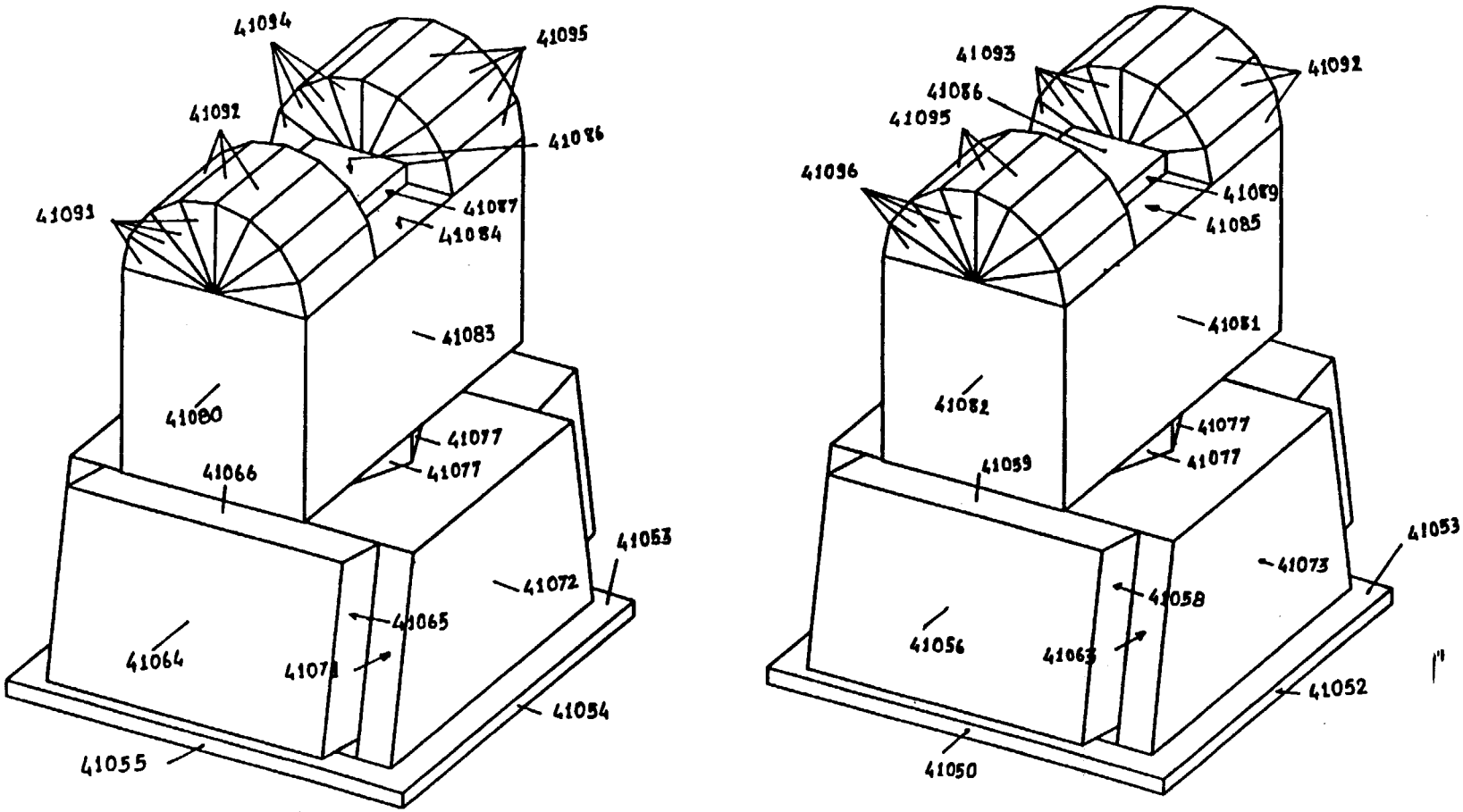

Notes:

1. See Tables Ia and Ib for surface properties.
2. This plot reflects node numbers for CERES–Aft. Node numbers for CERES–Fore are identical except that the first two digits are 40– in each case.

Figure 4. Surface Designations

Table Ia. Surface Properties – CERES–Fore

TRASYS Surface ID	Coating	Area (in^2)		Surface Emissivity		Surface Absorptivity	
		Calculated (TBD 001)	TRASYS	BOL	EOL	BOL	EOL
40056	5 mil Ag Teflon		82.4955	0.78	0.78	0.08	0.25
40082	5 mil Ag Teflon		61.2251	0.78	0.78	0.08	0.25
40096	5 mil Ag Teflon		20.9269	0.78	0.78	0.08	0.25
40061	Aluminized Teflon		11.3252	0.65	0.65	0.15	0.27
40062	Aluminized Teflon		8.1061	0.65	0.65	0.15	0.27
40063	Aluminized Teflon		11.3252	0.65	0.65	0.15	0.27
40093	Aluminized Teflon		20.9269	0.65	0.65	0.15	0.27
40064	5 mil Ag Teflon		82.4955	0.78	0.78	0.08	0.25
40080	5 mil Ag Teflon		61.2251	0.78	0.78	0.08	0.25
40091	5 mil Ag Teflon		20.9269	0.78	0.78	0.08	0.25
40069	Aluminized Teflon		11.3252	0.65	0.65	0.15	0.27
40070	Aluminized Teflon		8.1061	0.65	0.65	0.15	0.27
40071	Aluminized Teflon		11.3252	0.65	0.65	0.15	0.27
40094	Aluminized Teflon		20.9269	0.65	0.65	0.15	0.27
40073	5 mil Ag Teflon		100.258	0.78	0.78	0.08	0.25
40081	Aluminized Teflon		126.057	0.65	0.65	0.15	0.27
40060	Aluminized Teflon		19.6526	0.65	0.65	0.15	0.27
40065	Aluminized Teflon		19.6526	0.65	0.65	0.15	0.27
40072	Aluminized Teflon		100.258	0.65	0.65	0.15	0.27
40083	Aluminized Teflon		126.057	0.65	0.65	0.15	0.27
40058	Aluminized Teflon		19.6526	0.65	0.65	0.15	0.27
40067	Aluminized Teflon		19.6526	0.65	0.65	0.15	0.27
40084	5 mil Ag Teflon		9.487	0.78	0.78	0.08	0.25
40085	5 mil Ag Teflon		9.487	0.78	0.78	0.08	0.25
40086	5 mil Ag Teflon		18.972	0.78	0.78	0.08	0.25
40087	5 mil Ag Teflon		4.131	0.78	0.78	0.08	0.25
40089	5 mil Ag Teflon		4.131	0.78	0.78	0.08	0.25
40075	Aluminized Teflon		149.82	0.65	0.65	0.15	0.27
40059	Aluminized Teflon		28.8254	0.65	0.65	0.15	0.27
40066	Aluminized Teflon		28.8254	0.65	0.65	0.15	0.27
40053	Aluminized Teflon		251.857	0.65	0.65	0.15	0.27
40079	Aluminized Teflon		109.719	0.65	0.65	0.15	0.27
40057	Aluminized Teflon		28.8254	0.65	0.65	0.15	0.27

Table Ia. Surface Properties – CERES–Fōre

TRASYS Surface ID	Coating	Area (in^2)		Surface Emissivity		Surface Absorptivity	
		Calculated (TBD 001)	TRASYS	BOL	EOL	BOL	EOL
40056	5 mil Ag Teflon		82.4955	0.78	0.78	0.08	0.25
40082	5 mil Ag Teflon		61.2251	0.78	0.78	0.08	0.25
40096	5 mil Ag Teflon		20.9269	0.78	0.78	0.08	0.25
40061	Aluminized Teflon		11.3252	0.65	0.65	0.15	0.27
40062	Aluminized Teflon		8.1061	0.65	0.65	0.15	0.27
40063	Aluminized Teflon		11.3252	0.65	0.65	0.15	0.27
40093	Aluminized Teflon		20.9269	0.65	0.65	0.15	0.27
40064	5 mil Ag Teflon		82.4955	0.78	0.78	0.08	0.25
40080	5 mil Ag Teflon		61.2251	0.78	0.78	0.08	0.25
40091	5 mil Ag Teflon		20.9269	0.78	0.78	0.08	0.25
40069	Aluminized Teflon		11.3252	0.65	0.65	0.15	0.27
40070	Aluminized Teflon		8.1061	0.65	0.65	0.15	0.27
40071	Aluminized Teflon		11.3252	0.65	0.65	0.15	0.27
40094	Aluminized Teflon		20.9269	0.65	0.65	0.15	0.27
40073	5 mil Ag Teflon		100.258	0.78	0.78	0.08	0.25
40081	Aluminized Teflon		126.057	0.65	0.65	0.15	0.27
40060	Aluminized Teflon		19.6526	0.65	0.65	0.15	0.27
40065	Aluminized Teflon		19.6526	0.65	0.65	0.15	0.27
40072	Aluminized Teflon		100.258	0.65	0.65	0.15	0.27
40083	Aluminized Teflon		126.057	0.65	0.65	0.15	0.27
40058	Aluminized Teflon		19.6526	0.65	0.65	0.15	0.27
40067	Aluminized Teflon		19.6526	0.65	0.65	0.15	0.27
40084	5 mil Ag Teflon		9.487	0.78	0.78	0.08	0.25
40085	5 mil Ag Teflon		9.487	0.78	0.78	0.08	0.25
40086	5 mil Ag Teflon		18.972	0.78	0.78	0.08	0.25
40087	5 mil Ag Teflon		4.131	0.78	0.78	0.08	0.25
40089	5 mil Ag Teflon		4.131	0.78	0.78	0.08	0.25
40075	Aluminized Teflon		149.82	0.65	0.65	0.15	0.27
40059	Aluminized Teflon		28.8254	0.65	0.65	0.15	0.27
40066	Aluminized Teflon		28.8254	0.65	0.65	0.15	0.27
40053	Aluminized Teflon		251.857	0.65	0.65	0.15	0.27
40079	Aluminized Teflon		109.719	0.65	0.65	0.15	0.27
40057	Aluminized Teflon		28.8254	0.65	0.65	0.15	0.27

Table Ia. Surface Properties – CERES–Fore (cont'd)

TRASYS Surface ID	Coating	Area (in^2)		Surface Emissivity		Surface Absorptivity	
		Calculated (TBD 001)	TRASYS	BOL	EOL	BOL	EOL
40068	Aluminized Teflon		28.8254	0.65	0.65	0.15	0.27
40074	Aluminized Teflon		190.438	0.65	0.65	0.15	0.27
40051	Aluminum		251.857	0.65	0.65	0.15	0.27
40095	Aluminized Teflon		55.786	0.65	0.65	0.15	0.27
40092	Aluminized Teflon		55.786	0.65	0.65	0.15	0.27
40077	Aluminized Teflon		25.8741	0.65	0.65	0.15	0.27

Notes:

BOL	Beginning of life
C	Celsius
EOL	End of life
ID	Identification
in	Inch

Table Ib. Surface Properties – CERES–Aft

TRASYS Surface ID	Coating	Area (in^2)		Surface Emissivity		Surface Absorptivity	
		Calculated (TBD 001)	TRASYS	BOL	EOL	BOL	EOL
41056	5 mil Ag Teflon		82.4955	0.78	0.78	0.08	0.25
41082	5 mil Ag Teflon		61.2251	0.78	0.78	0.08	0.25
41096	5 mil Ag Teflon		20.9269	0.78	0.78	0.08	0.25
41061	Aluminized Teflon		11.3252	0.65	0.65	0.15	0.27
41062	Aluminized Teflon		8.1061	0.65	0.65	0.15	0.27
41063	Aluminized Teflon		11.3252	0.65	0.65	0.15	0.27
41093	Aluminized Teflon		20.9269	0.65	0.65	0.15	0.27
41064	5 mil Ag Teflon		82.4955	0.78	0.78	0.08	0.25
41080	5 mil Ag Teflon		61.2251	0.78	0.78	0.08	0.25
41091	5 mil Ag Teflon		20.9269	0.78	0.78	0.08	0.25
41069	Aluminized Teflon		11.3252	0.65	0.65	0.15	0.27
41070	Aluminized Teflon		8.1061	0.65	0.65	0.15	0.27
41071	Aluminized Teflon		11.3252	0.65	0.65	0.15	0.27
41094	Aluminized Teflon		20.9269	0.65	0.65	0.15	0.27
41073	5 mil Ag Teflon		100.258	0.78	0.78	0.08	0.25
41081	Aluminized Teflon		126.057	0.65	0.65	0.15	0.27
41060	Aluminized Teflon		19.6526	0.65	0.65	0.15	0.27
41065	Aluminized Teflon		19.6526	0.65	0.65	0.15	0.27
41072	Aluminized Teflon		100.258	0.65	0.65	0.15	0.27
41083	Aluminized Teflon		126.057	0.65	0.65	0.15	0.27
41058	Aluminized Teflon		19.6526	0.65	0.65	0.15	0.27
41067	Aluminized Teflon		19.6526	0.65	0.65	0.15	0.27
41084	5 mil Ag Teflon		9.487	0.78	0.78	0.08	0.25
41085	5 mil Ag Teflon		9.487	0.78	0.78	0.08	0.25
41086	5 mil Ag Teflon		18.972	0.78	0.78	0.08	0.25
41087	5 mil Ag Teflon		4.131	0.78	0.78	0.08	0.25
41089	5 mil Ag Teflon		4.131	0.78	0.78	0.08	0.25
41075	Aluminized Teflon		149.82	0.65	0.65	0.15	0.27
41059	Aluminized Teflon		28.8254	0.65	0.65	0.15	0.27
41066	Aluminized Teflon		28.8254	0.65	0.65	0.15	0.27
41053	Aluminized Teflon		251.857	0.65	0.65	0.15	0.27
41079	Aluminized Teflon		109.719	0.65	0.65	0.15	0.27
41057	Aluminized Teflon		28.8254	0.65	0.65	0.15	0.27

Table Ib. Surface Properties – CERES–Aft (cont'd)

TRASYS Surface ID	Coating	Area (in^2)		Surface Emissivity		Surface Absorptivity	
		Calculated (TBD 001)	TRASYS	BOL	EOL	BOL	EOL
41068	Aluminized Teflon		28.8254	0.65	0.65	0.15	0.27
41074	Aluminized Teflon		190.438	0.65	0.65	0.15	0.27
41051	Aluminum		251.857	0.65	0.65	0.15	0.27
41095	Aluminized Teflon		55.786	0.65	0.65	0.15	0.27
41092	Aluminized Teflon		55.786	0.65	0.65	0.15	0.27
41077	Aluminized Teflon		25.8741	0.65	0.65	0.15	0.27

Notes:

BOL	Beginning of life
C	Celsius
EOL	End of life
ID	Identification
in	Inch

2 REDUCED THERMAL MODELS

The Reduced Thermal Models (RTMs) used for spacecraft–level analysis are identified in Table II.

2.1 Reduced Thermal Model Analysis Cases

The Systems Improved Numerical Differencing Analyzer (SINDA) RTM Analysis Cases are described below, and the resulting temperature predictions are provided in Tables IIIa and IIIb.

The thermal analysis reflected in this ICD was performed assuming that two Bus Data Units (BDUs) were on the same Spacecraft mounting plate as CERES. Although this is no longer the baseline configuration, there are two Earth Sensors and two Earth Sensor Electronics (ESE) units on the plate. The effects on the view factors and radiator predicts (**TBR 001**) will be assessed during the next iteration of Spacecraft thermal analysis.

2.1.1 Analysis Case 1 – End of Life Science Mode

Analysis Case 1, End of Life (EOL) Science Mode, provides worst case maximum temperature predictions and heater power estimates (if required) for the Science Mode. The spacecraft is assumed to be in the normal operational Earth–oriented orbit and at normal altitude. A rotating (sun–tracking) Solar Array is assumed. EOL thermal surface properties for the spacecraft and instruments are used. Peak power dissipation profiles (as received with the instrument reduced thermal models) for the science data gathering mode of each instrument are included. The thermal worst hot case duty cycles for all housekeeping equipment are used to provide a hot spacecraft interface. Instrument doors and covers are assumed to be open. Three EOL Science cases were run with differing angles between the solar vector and the orbit plane (i.e., beta angles = 13.5, 18, and 30.8 degrees).

2.1.2 Analysis Case 2 – Beginning of Life Science/Standby Mode

Analysis Case 2, Beginning of Life (BOL) Science/Standby Mode, provides worst case minimum temperature predictions and heater power estimates for the Science/Standby Mode. The spacecraft is assumed to be in the normal operational Earth–oriented orbit and at normal altitude. A rotating Solar Array is assumed. BOL thermal surface properties for the spacecraft and instruments are used. The instrument power dissipations are assumed to be at standby levels throughout the orbits (i.e., science data taking peak dissipations are not included). For instruments with no transient power dissipations provided in the RTMs, the same power dissipations as the EOL Science Mode are used. The cold case power duty cycles for all housekeeping equipment are used. Instrument doors and covers are assumed to be open. Three bounding BOL Science/Standby cases were run with differing angles between the solar vector and the orbit plane (i.e., beta angles = 15, 24.5, and 30 degrees).

2.1.3 Analysis Case 3 – Beginning of Life Survival Mode

Analysis Case 3, BOL Survival Mode, provides worst case minimum temperature predictions and maximum heater power estimates for the Survival Mode. Survival Mode represents a critically low power availability condition; therefore, the instruments and much of the housekeeping equipment are powered off. Instrument and survival heaters are assumed to be enabled (i.e., power comes on when set points are reached). The spacecraft is assumed to be in the normal operational Earth–oriented orbit and at normal altitude. A rotating Solar Array is assumed. BOL thermal surface properties for the spacecraft and instruments are used. Instrument doors and covers are assumed to be open. Three bounding BOL Survival cases were run with differing angles between the solar vector and the orbit plane (i.e., beta angles = 15, 24.5, and 30 degrees).

2.1.4 Analysis Case 4 – Orbital Acquisition and Initialization

Analysis Case 4, Orbital Acquisition and Initialization (OAI), provides temperature predictions and heater power requirements used to determine the spacecraft energy balance in the initial part of the mission before the solar array is deployed. It is assumed that the entire spacecraft (except batteries and propulsion tanks) is at 10° C at the beginning of the injection orbit. Batteries and propulsion tanks are assumed to be at 20° C. The spacecraft is Earth oriented but at injection orbit altitudes of 550 to 705 km; and the Solar Array and High Gain Antenna are stowed. The models were run for 10 orbits to determine how far temperatures would drop and how much heater power is required if solar array deployment is delayed past nominal deployment. The appropriate acquisition and initialization housekeeping equipment is assumed to be on, instruments off, and survival heaters enabled. BOL thermal surface properties for the spacecraft and instruments are used. Instrument doors and covers are assumed to be closed. Three OAI cases were run with differing angles between the solar vector and the orbit plane (i.e., beta angles = 15, 24.5, and 30 degrees).

2.1.5 Analysis Case 5 – End of Life Sun–Pointing Safe Mode

Analysis Case 5, EOL Sun–Pointing Safe Mode (SPSM), provides maximum temperature predictions for equipment and instruments with –X surface exposures during SPSM. (SPSM is entered when the spacecraft loses Earth lock. In this mode, the Solar Array is "parked" normal to the spacecraft X–axis, with the cells looking in the –X direction.) The spacecraft is assumed to be in an inertially fixed orbit at normal altitude with the solar array cells and the spacecraft –X axis always normal to the sun. The appropriate housekeeping equipment is assumed to be on, instruments off, and survival heaters enabled. EOL thermal surface properties for the spacecraft and instruments are used. Instrument doors and covers are assumed to be open. Since there may be no roll control in this mode, this case was modeled for two roll positions about the X–axis: #1 with the ±X and ±Z surfaces alternately perpendicular to the Earth around the orbit; and #2 with the ±X and ±Y surfaces alternately perpendicular to the Earth around the orbit. Both cases were run at beta angle = 30.8 degrees.

2.1.6 Analysis Case 6 – Beginning of Life Sun–Pointing Safe Mode

Analysis Case 6, BOL SPSM, provided temperature predictions and maximum heater power estimates for the SPSM. The altitude and orbital orientations of the spacecraft and the Solar Array are the same as the EOL SPSM for both roll positions, except that the BOL cases were run at beta angle = 15 degrees. The appropriate housekeeping equipment is assumed to be on, instruments off, and survival heaters enabled. BOL thermal surface properties for the spacecraft and instruments are used. Instrument doors and covers are assumed to be open.

2.1.7 Analysis Case 7 – Orbital Acquisition and Initialization Sun–Pointing Safe Mode

Analysis Case 7, OAI SPSM, provides temperature predictions and heater power estimates for the OAI SPSM. (OAI SPSM is entered when the spacecraft fails to acquire the Earth during the injection orbit.) The spacecraft and deployed Solar Array orbital orientations are similar to the EOL and BOL SPSM cases (i.e., the OAI SPSM cases are SPSM #2 upside down); except that the injection orbit altitudes of 550 to 705 km are used and two OAI SPSM cases were run with differing angles between the solar vector and the orbit plane (i.e., beta angles = 15 and 24.5 degrees). The appropriate housekeeping equipment is assumed to be on, instruments off, and survival heaters enabled. BOL thermal surface properties for the spacecraft and instruments are used. Instrument doors and covers are assumed to be closed.

2.2 Power Dissipation

The power dissipations used for spacecraft–level analysis are identified in Tables IVa and IVb.

Table II. Reduced Thermal Models

	Revision			
	Preliminary	Revision #1	Revision #2	
Date	4/8/92	8/4/92	11/3/92	
TRASYS22 file name	EOS1.TRA EOS2.TRA	CERES3FW.INP CERES3AF.INP	CRF–THV3.INP CRA–THV3.INP	
SINDA87 file name	EOS1.SIN EOS2.SIN (SINDA85)	CERES3FW.SIN CERES3AF.SIN	CRF–SHV3.INP CRA–SHV3.INP	
Node #	67001 to 67080 67501 to 67580	67001 to 67082 67501 to 67582	40001 to 40095 41001 to 41095	

Table IIIa. Test Case Temperature Predictions – CERES–Fore

SINDA Node # (See Note)	Temperature Range (C)		Test Case Temperature Predictions (C)						
	Op	Non–Op	1 (max)	2 (min)	3 (min)	4 (min)	5 (max)	6 (min)	7 (min)
40006 DAEHR	–20 to 35	–30 to 45	35	11	–27	–26	–11	–30	–30
40007 EEHR	–20 to 35	–30 to 45	24	5	–27	–25	–5	–28	–27
40009 DHA	37 to 39	–15 to 45	38	38	–13	–13	–13	–15	–13
40011 SPDL	–20 to 35	–30 to 45	29	20	–15	–15	–13	–15	–15
40012 EDE	–20 to 35	–30 to 45	23	8	–26	–25	–6	–28	–26
40014 PE1	–20 to 35	–30 to 45	31	6	–26	–22	–9	–30	–30
40015 PE2	–20 to 35	–30 to 45	30	5	–26	–22	–17	–30	–30
40016 ADA	–20 to 35	–30 to 45	23	2	–26	–22	–14	–31	–30
40017 EDA	–10 to 35	–15 to 45	24	9	–26	–24	–9	–27	–26
Orbit Avg. Heater Power (W)	N/A	N/A	3	5	4	N/A	3	14	9

Notes:

ADA	Azimuth Drive Assembly
DAEHR	Data Acquisition Electronics Head Radiator
DHA	Detector Head Assembly
EDA	Elevation Drive Assembly
EDE	Elevation Drive Electronics
EEHR	Elevation Electronics Head Radiator
max	Maximum
min	Minimum
Non–Op	Non–operating
Op	Operating
PE1	Pedestal Electronics #1
PE2	Pedestal Electronics #2
SPDL	Spindle

Table IIIb. Test Case Temperature Predictions – CERES–Aft

SINDA Node # (See Note)	Temperature Range (C)		Test Case Temperature Predictions (C)						
	Op	Non–Op	1 (max)	2 (min)	3 (min)	4 (min)	5 (max)	6 (min)	7 (min)
41006 DAEHR	–20 to 35	–30 to 45	29	6	–28	–30	–14	–30	–30
41007 EEHR	–20 to 35	–30 to 45	16	–2	–30	–28	–10	–30	–28
41009 DHA	37 to 39	–15 to 45	38	38	–13	–13	–13	–15	–13
41011 SPDL	–20 to 35	–30 to 45	25	17	–15	–15	–13	–15	–15
41012 EDE	–20 to 35	–30 to 45	16	0	–30	–28	–11	–28	–28
41014 PE1	–20 to 35	–30 to 45	22	–4	–30	–30	–16	–30	–30
41015 PE2	–20 to 35	–30 to 45	22	–2	–30	–30	–21	–30	–30
41016 ADA	–20 to 35	–30 to 45	15	–7	–30	–29	–19	–31	–31
41017 EDA	–10 to 35	–15 to 45	17	2	–27	–27	–13	–27	–27
Orbit Avg. Heater Power (W)	N/A	N/A	4	5	11	N/A	5	18	12

Notes:

ADA	Azimuth Drive Assembly
DAEHR	Data Acquisition Electronics Head Radiator
DHA	Detector Head Assembly
EDA	Elevation Drive Assembly
EDE	Elevation Drive Electronics
EEHR	Elevation Electronics Head Radiator
max	Maximum
min	Minimum
Non–Op	Non–operating
Op	Operating
PE1	Pedestal Electronics #1
PE2	Pedestal Electronics #2
SPDL	Spindle

Table IVa. Power Dissipation – CERES–Fore

Node #/Description	Average Power Dissipation (Watts)			
	Mode			
	Safe (BOL)	Survival (BOL)	Biaxial	Cross–Track
40006/DAEHR	0	0	9.12	8.50
40007/EEHR	0	0	0	0
40009/DHA	0	0	0	0
40011/SPDL	0	0	2.14	2.14
40012/EDE	0	0	3.20	3.20
40014/PE1	0	0	9.87	6.25
40015/PE2	0	0	9.87	6.25
40016/ADA	0	0	2.90	1.60
40017/EDA	0	0	1.61	1.61
Total RTM electrical dissipation	0	0	38.71	29.55
Detailed model electrical dissipation	(TBD 002)	(TBD 002)	(TBD 002)	(TBD 002)
Detailed model heater power	(TBD 002)	(TBD 002)	(TBD 002)	(TBD 002)

Notes:

ADA	Azimuth Drive Assembly
DAEHR	Data Acquisition Electronics Head Radiator
DHA	Detector Head Assembly
EDA	Elevation Drive Assembly
EDE	Elevation Drive Electronics
EEHR	Elevation Electronics Head Radiator
PE1	Pedestal Electronics #1
PE2	Pedestal Electronics #2
SPDL	Spindle

Table IVb. Power Dissipation – CERES–Aft

Node #/Description	Average Power Dissipation (Watts)			
	Mode			
	Safe	Survival	Biaxial	Cross–Track
41006/DAEHR	0	0	9.12	8.50
41007/EEHR	0	0	0	0
41009/DHA	0	0	0	0
41011/SPDL	0	0	2.14	2.14
41012/EDE	0	0	3.20	3.20
41014/PE1	0	0	9.87	6.25
41015/PE2	0	0	9.87	6.25
41016/ADA	0	0	2.90	1.60
41017/EDA	0	0	1.61	1.61
Total RTM electrical dissipation	0	0	38.71	29.55
Detailed model electrical dissipation	**(TBD 002)**	**(TBD 002)**	**(TBD 002)**	**(TBD 002)**
Detailed model heater power	**(TBD 002)**	**(TBD 002)**	**(TBD 002)**	**(TBD 002)**

Notes:

ADA	Azimuth Drive Assembly
DAEHR	Data Acquisition Electronics Head Radiator
DHA	Detector Head Assembly
EDA	Elevation Drive Assembly
EDE	Elevation Drive Electronics
EEHR	Elevation Electronics Head Radiator
PE1	Pedestal Electronics #1
PE2	Pedestal Electronics #2
SPDL	Spindle

3 THERMAL CONTROL

1. Heaters, coolers, control sensors, and temperature telemetry sensors are described in Tables Va and Vb.

2. Heater and sensor locations are shown in Figure 5.

3. Temperature limits are given in Tables VIa and VIb.

Table Va. Temperature Control – CERES–Fore

ID	Detector	Pedestal Electronics	Pedestal Electronics	Elevation Drive
Function	Operational Heater	Survival Heater	Survival Heater	Survival Heater
Type	Proportional	Thermostatic	Thermostatic	Thermostatic
Location/RTM node				
Device	(TBD 003)	(TBD 003)	(TBD 003)	(TBD 003)
Control sensor	(TBD 003)	(TBD 003)	(TBD 003)	(TBD 003)
Telemetry sensor	(TBD 003)	(TBD 003)	(TBD 003)	(TBD 003)
Temperature telemetry sensor acronym	(TBD 003)	(TBD 003)	(TBD 003)	(TBD 003)
Heat sink	Detector Housing	Electronics Box	Electronics Box	Motor Case
Control method	Proportional	Thermostatic	Thermostatic	Thermostatic
Power source	Instrument Power	Survival Power	Survival Power	Survival Power
Dissipation (W)				
Rated Power (W) @ Specified Voltage (VDC)	(TBD 004)	(TBD 004)	(TBD 004)	(TBD 004)
Set points (C)				
On	37.9	–29.0	–29.0	0
Off	38.1	–22.0	–22.0	7.0

Notes:

C Celsius

ID Identifier

W Watt

Table Vb. Temperature Control – CERES–Aft

ID	Detector	Pedestal Electronics	Pedestal Electronics	Elevation Drive
Function	Operational Heater	Survival Heater	Survival Heater	Survival Heater
Type	Proportional	Thermostatic	Thermostatic	Thermostatic
Location/RTM node				
Device	**(TBD 003)**	**(TBD 003)**	**(TBD 003)**	**(TBD 003)**
Control sensor	**(TBD 003)**	**(TBD 003)**	**(TBD 003)**	**(TBD 003)**
Telemetry sensor	**(TBD 003)**	**(TBD 003)**	**(TBD 003)**	**(TBD 003)**
Temperature telemetry sensor acronym	**(TBD 003)**	**(TBD 003)**	**(TBD 003)**	**(TBD 003)**
Heat sink	Detector Housing	Electronics Box	Electronics Box	Motor Case
Control method	Proportional	Thermostatic	Thermostatic	Thermostatic
Power source	Instrument Power	Survival Power	Survival Power	Survival Power
Dissipation (W)				
Rated Power (W)	**(TBD 004)**	**(TBD 004)**	**(TBD 004)**	**(TBD 004)**
@ Specified Voltage (VDC)				
Set points (C)				
On	37.9	–29.0	–29.0	0
Off	38.1	–22.0	–22.0	7.0

Notes:

C Celsius

ID Identifier

W Watt

(TBD 005)

Figure 5. Heater and Sensor Locations

Size	Code Ident No.		
A	49671	20008823	
			Sheet 31

Table VIa. Temperature Limits – CERES–Fore (See Note 1.) (TBD 006)

Mode	Average (C)	Telemetry Acronym CEF–Tx–_____		Telemetry Acronym CEF–Tx–_____	
		Minimum (C)	Maximum (C)	Minimum (C)	Maximum (C)
Launch					
Safe					
Survival (see Note 2.)					
Turn–on					
Cross–Track					
Biaxial					
Calibration					

Notes:

1. Telemetry identified by * is invalid when instrument power is off.
2. Survival limits represent temperatures beyond which the instrument cannot recover and meet performance requirements.

Table VIb. Temperature Limits – CERES–Aft (See Note 1.) (TBD 006)

Mode	Average (C)	Telemetry Acronym CEA–Tx–_____		Telemetry Acronym CEA–Tx–_____	
		Minimum (C)	Maximum (C)	Minimum (C)	Maximum (C)
Launch		(TBD)	(TBD)	(TBD)	(TBD)
Safe					
Survival (see Note 2.)					
Turn–on					
Cross–Track					
Biaxial					
Calibration					

Notes:

1. Telemetry identified by * is invalid when instrument power is off.
2. Survival limits represent temperatures beyond which the instrument cannot recover and meet performance requirements.

Table VII. Reference Documents*

Document Number	Date	Document Title	Source

* Table information will be filled in as required.

Next Assembly	Used on
20008820	EOS–AM

First Application
EOS–AM

Revisions		Rev	
Ltr	Description	Date	Approve
001	Draft	7/23/93	

Revision Record Continued on Sheet _____

Contract No.	NAS5–32500
Written	N. Benko
Date	
Approved	F. Komro
Date	
Approved	
Date	
Issued	G. Rauscher
Date	

MARTIN MARIETTA
POST OFFICE BOX 800
PRINCETON, NEW JERSEY 08543–080
TELEPHONE (609) 490–3400

Interface Control Drawing, Electrical, Tables, Earth Observing System AM Spacecraft to Clouds and the Earth's Radiant Energy System

Size	Code Ident No.	
A	49671	20008825

PURPOSE

The Electrical Interface Control Drawing (EICD) Tables, 20008825, when executed, in conjunction with the EICD Schematic, 20008824, represents an agreement of the detailed implementation of the electrical interface between the Earth Observing System (EOS) AM Spacecraft and the Clouds and the Earth's Radiation System (CERES). These two drawings, together with the Mechanical Interface Control Drawing (MICD) Drawing, 20008821, MICD Tables, 20008822, Thermal Interface Control Drawing (TICD), 20008823, Integration and Test Interface Control Drawing (I&T ICD), 20008826, and Command and Telemetry Interface Control Drawing (C&T ICD), 20008827, describe the details of the interfaces between the EOS–AM Spacecraft and CERES. The top–level instrument Interface Control Drawing (ICD), 20008820, provides the instrument ICD tree and revision status for all sub–tier instrument ICDs.

SCOPE

The EICD Tables contain information necessary to fabricate and test the instrument harnesses. It provides definition of interface circuits, timing diagrams, power profiles and transients, and electromagnetic sources and sensitivities. The EICD Schematic contains the instrument system schematic and grounding diagram.

Approval Signatures

IN ADDITION TO ECN AND CCB APPROVALS
ALL CHANGES ON THIS DRAWING SHALL HAVE THE APPROVAL AND THE FULL AGREEMENT OF THE PARTIES LISTED BELOW.

REV	Spacecraft Program Office	Date	Instrument Program Office	Date	Instrument Provider	Date	Principal Investi–gator	Date
	(signature on file) M. Kavka	8/25/93	J. Cooper		S. Carman		B. Bark–strom	

Size	Code Ident No.	
A	49671	20008825
		Sheet 2

Table of Contents

Section	Title	Sheet
	PURPOSE	2
	SCOPE	2
	Approval Signatures	2
1	HARNESSES	10
1.1	Harness Definition	10
1.2	Interface Circuits	10
1.3	Timing Diagrams	10
2	POWER	57
3	ELECTROMAGNETIC COMPATIBILITY	64

List of Figures

Figure No.	Title	Sheet
1a	Harness Block Diagram – CERES–Fore/Spacecraft Interface	11
1b	Harness Block Diagram – CERES–Aft/Spacecraft Interface	12
2a	Harness Block Diagram – CERES–Fore/Power	13
2b	Harness Block Diagram – CERES–Aft/Power	14
3a	Harness Block Diagram – CERES–Fore/Command and Telemetry Interface	15
3b	Harness Block Diagram – CERES–Aft/Command and Telemetry Interface	16
4a	Harness Block Diagram – CERES–Fore/Science Interface	17
4b	Harness Block Diagram – CERES–Aft/Science Interface	18
5	Power Interface Circuit	44
6	Command and Telemetry Bus Interface Circuit	45
7	Time Mark and Frequency Bus Interface Circuit	46
8	Science Data Interface Circuit	47
9	BDU Relay Drive Command Interface Circuit(s)	48
10	BDU Passive Bi–Level Telemetry Interface Circuit(s)	49
11	BDU Passive Analog Telemetry Interface Circuit(s)	50
12	Command and Telemetry Bus Timing Diagram	51
13	Time Mark and Frequency Bus Timing Diagram	52
14	Science Data Timing Diagram	53
15	BDU Relay Drive Command Timing Diagram(s)	54
16	BDU Passive Bi–Level Telemetry Timing Diagram(s)	55
17	BDU Passive Analog Telemetry Timing Diagram(s)	56
18	Worst Case Biaxial Power Peak	59
19	Worst Case Biaxial Power Profile	60
20	Turn–On Transient	61
21	Turn–Off Transient	62
22	[Mode] Switch Transient	63
23	Conducted Emissions Test Data – Power Leads (CE01)	66
24	Conducted Emissions Test Data – Power Leads (CE03)	67
25	Radiated Emissions Test Data – Electric Field (RE02)	68
26	Radiated Emissions Test Data – Magnetic Field (RE04)	69
27	Conducted Susceptibility Test Data – Power Leads (CS01)	70
28	Conducted Susceptibility Test Data – Power Leads (CS02)	71
29	Conducted Susceptibility Test Data – Power Leads (CS06)	72
30	Radiated Susceptibility Test Data – Magnetic Field (RS01)	73
31	Radiated Susceptibility Test Data – Electric Field (RS03)	74
32	Magnetic Properties Test Data	75

List of Tables

Table No.	Title	Sheet
Ia	Harness Length – CERES–Fore	19
Ib	Harness Length – CERES–Aft	19
IIa	Connector List – CERES–Fore	20
IIb	Connector List – CERES–Aft	21
IIIa	CEFP1: Power – Feed A Interconnections – CERES–Fore	22
IIIb	CEAP1: Power – Feed A Interconnections – CERES–Aft	23
IIIc	CEFP2: Power – Feed B Interconnections – CERES–Fore	24
IIId	CEAP2: Power – Feed B Interconnections – CERES–Aft	25
IIIe	CEFP3: C&T Bus A Interconnections – CERES–Fore	26
IIIf	CEAP3: C&T Bus A Interconnections – CERES–Aft	26
IIIg	CEFP4: C&T Bus B Interconnections – CERES–Fore	27
IIIh	CEAP4: C&T Bus B Interconnections – CERES–Aft	27
IIIi	CEFP5: TM&F Bus – Side A Interconnections – CERES–Fore	28
IIIj	CEAP5: TM&F Bus – Side A Interconnections – CERES–Aft	28
IIIk	CEFP6: TM&F Bus – Side B Interconnections – CERES–Fore	29
IIIm	CEAP6: TM&F Bus – Side B Interconnections – CERES–Aft	29
IIIn	CEFP7: Low Rate Science Data Bus – Side A Interconnections – CERES–Fore	30
IIIo	CEAP7: Low Rate Science Data Bus – Side A Interconnections – CERES–Aft	30
IIIp	CEFP8: Low Rate Science Data Bus – Side B Interconnections – CERES–Fore	31
IIIq	CEAP8: Low Rate Science Data Bus – Side B Interconnections – CERES–Aft	31
IIIr–1	CEFP9: BDU Relay Drive Commands – Side A Interconnections – CERES–Fore	32
IIIr–2	CEFP9: BDU Passive Bi–Level Telemetry – Side A Interconnections – CERES–Fore	33
IIIr–3	CEFP9: BDU Passive Analog Telemetry – Side A Interconnections – CERES–Fore	34
IIIs–1	CEAP9: BDU Relay Drive Commands – Side A Interconnections – CERES–Aft	35
IIIs–2	CEAP9: BDU Passive Bi–Level Telemetry – Side A Interconnections – CERES–Aft	36
IIIs–3	CEAP9: BDU Passive Analog Telemetry – Side A Interconnections – CERES–Aft	37
IIIt–1	CEFP10: BDU Relay Drive Commands – Side B Interconnections – CERES–Fore	38
IIIt–2	CEFP10: BDU Passive Bi–Level Telemetry – Side B Interconnections – CERES–Fore	39
IIIt–3	CEFP10: BDU Passive Analog Telemetry – Side B Interconnections – CERES–Fore	40
IIIu–1	CEAP10: BDU Relay Drive Commands – Side B Interconnections – CERES–Aft	41
IIIu–2	CEAP10: BDU Passive Bi–Level Telemetry – Side B Interconnections – CERES–Aft	42
IIIu–3	CEAP10: BDU Passive Analog Telemetry – Side B Interconnections – CERES–Aft	43
IV	Power Consumption	58
V	Emissions	65
VI	Susceptibility	65
VII	Magnetic Properties	65
VIII	Magnetic Susceptibility	65
IX	Reference Documents	76

TBD LOG

ITEM	SECTION	PAGE	SUBJECT	RESPONSIBLE	DUE
TBD 001	Figure 1a Figure 1b	11 12	Flight Connector Number Assignments – CERES–Fore and CERES–Aft	S. Holaday (MMC)	6–30–94
TBD 002	Figure 1a Figure 1b Table 1a Table 1b	11 12 19 19	Harness Segment ID Numbers – CERES–Fore and CERES–Aft	S. Holaday (MMC)	12–30–94
TBD 003	Table 1a Table 1b	19 19	Number of Harness Segments and Connector Pairs – CERES–Fore and CERES–Aft	S. Holaday (MMC)	6–30–94
TBD 004	Table 1a Table 1b	19 19	Harness Length – CERES–Fore and CERES–Aft	S. Holaday (MMC)	10–29–93
TBD 005	Table IIa Table IIb	20 21	Component Connector Designations – CERES–Fore and CERES–Aft	G. Uyeno (TRW)	CERES CDR
TBD 006	Table IIa Table IIb	20 21	Harness Connector Designations	S. Holaday (MMC)	CERES CDR+ 4wks
TBD 007	Table IIIa Table IIIb Table IIIc Table IIId	22 23 24 25	Pin Destinations – Feeds A and B – CERES–Fore and CERES–Aft	G. Uyeno (TRW)	CERES CDR
TBD 008	Table IIIa–IIIu	22–43	Interconnections – Shield Group (16 places)	S. Holaday (MMC)	6–30–94
TBD 009	Table IIIa–IIIu	22–43	Interconnections – Color (28 places)	S. Holaday (MMC)	9–30–94
TBD 010	Table IIIe Table IIIf Table IIIg Table IIIh	26 26 27 27	C&T Bus Interconnections – Pin Destinations – Bus A and B – CERES–Fore and CERES–Aft	G. Uyeno (TRW)	CERES CDR
TBD 011	Table IIIi Table IIIj Table IIIk Table IIIm	28 28 29 29	TM&F Interconnections – Pin Destinations – Bus A and B – CERES–Fore and CERES–Aft	G. Uyeno (TRW)	CERES CDR
TBD 012	Table IIIn Table IIIo Table IIIp Table IIIq	30 30 31 31	Low Rate Science Bus Interconnections Pin Destinations – Bus A and B – CERES–Fore and CERES–Aft	G. Uyeno (TRW)	CERES CDR
TBD 013	Table IIIr–1 Table IIIs–1 Table IIIt–1 Table IIIu–1	32 35 38 41	BDU Relay Drive Command Interconnections – Pin Functions and Destinations – Side A and B – CERES–Fore and CERES–Aft	G. Uyeno (TRW)	CERES CDR
TBD 014	Table IIIr–u	32–43	Interconnections – Twist Group (12 places)	S. Holaday (MMC)	6–30–94
TBD 015	Table IIIr–2 Table IIIs–2 Table IIIt–2 Table IIIu–2	33 36 39 42	BDU Passive Bi–Level Telemetry Interconnections – Pin Functions and Destinations – Side A and B – CERES–Fore and CERES–Aft	G. Uyeno (TRW)	CERES CDR

TBD LOG

ITEM	SECTION	PAGE	SUBJECT	RESPONSIBLE	DUE
TBD 016	Table IIIr–3 Table IIIs–3 Table IIIt–3 Table IIIu–3	34 37 40 43	BDU Passive Analog Telemetry Interconnections – Pin Functions and Destinations –Side A and B – CERES–Fore and CERES–Aft	G. Uyeno (TRW)	CERES CDR
TBD 017	Figure 5	44	Power Interface Circuit	G. Uyeno (TRW)	CERES CDR + 6 mos.
TBD 018	Figure 6	45	C&T Bus Interface Circuit	G. Uyeno (TRW)	CERES CDR + 6 mos.
TBD 019	Figure 7	46	TM&F Bus Interface Circuit	G. Uyeno (TRW)	CERES CDR + 6 mos.
TBD 020	Figure 8	47	Science Data Interface Circuit	G. Uyeno (TRW)	CERES CDR + 6 mos.
TBD 021	Figure 9	48	BDU Relay Drive Command Interface Circuit(s)	G. Uyeno (TRW)	CERES CDR + 6 mos.
TBD 022	Figure 10	49	BDU Passive Bi–Level Telemetry Interface Circuit(s)	G. Uyeno (TRW)	CERES CDR + 6 mos.
TBD 023	Figure 11	50	BDU Passive Analog Telemetry Interface Circuit(s)	G. Uyeno (TRW)	CERES CDR + 6 mos.
TBD 024	Figure 12	51	C&T Bus Timing Diagram	G. Uyeno (TRW)	CERES CDR + 6 mos.
TBD 025	Figure 14	53	Science Data Timing Diagram	G. Uyeno (TRW)	CERES CDR + 6 mos.
TBD 026	Figure 15	54	BDU Relay Drive Command Timing Diagram(s)	G. Uyeno (TRW)	CERES CDR + 6 mos.
TBD 027	Figure 16	55	BDU Passive Bi–Level Telemetry Timing Diagram(s)	G. Uyeno (TRW)	CERES CDR + 6 mos.
TBD 028	Figure 17	56	BDU Passive Analog Telemetry Timing Diagram(s)	G. Uyeno (TRW)	CERES CDR + 6 mos.
TBD 029	Section 2	57	Test Point Pin and Connector for Fuse Verification	S. Holaday (MMC)	9–30–94

TBD LOG

ITEM	SECTION	PAGE	SUBJECT	RESPONSIBLE	DUE
TBD 030	Figure 20	61	CERES Turn–On Transient	G. Uyeno (TRW)	FM1 Test
TBD 031	Figure 21	62	CERES Turn–Off Transient	G. Uyeno (TRW)	FM1 Test
TBD 032	Figure 22	63	CERES [Mode] Switch Transient	G. Uyeno (TRW)	FM1 Test
TBD 033	Table V	65	Emissions	G. Uyeno (TRW)	FM1 Test
TBD 034	Table VI	65	Susceptibility	G. Uyeno (TRW)	FM1 Test
TBD 035	Table VII	65	Magnetic Properties	G. Uyeno (TRW)	FM1 Test
TBD 036	Table VIII	65	Magnetic Susceptibility	G. Uyeno (TRW)	FM1 Test
TBD 037	Figure 23	66	CE01 Test Data	G. Uyeno (TRW)	FM1 Test
TBD 038	Figure 24	67	CE03 Test Data	G. Uyeno (TRW)	FM1 Test
TBD 039	Figure 25	68	RE02 Test Data	G. Uyeno (TRW)	FM1 Test
TBD 040	Figure 26	69	RE04 Test Data	G. Uyeno (TRW)	FM1 Test
TBD 041	Figure 27	70	CS01 Test Data	G. Uyeno (TRW)	FM1 Test
TBD 042	Figure 28	71	CS02 Test Data	G. Uyeno (TRW)	FM1 Test
TBD 043	Figure 29	72	CS06 Test Data	G. Uyeno (TRW)	FM1 Test
TBD 044	Figure 30	73	RS01 Test Data	G. Uyeno (TRW)	FM1 Test
TBD 045	Figure 31	74	RS03 Test Data	G. Uyeno (TRW)	FM1 Test
TBD 046	Figure 32	75	Magnetic Properties Test Data	G. Uyeno (TRW)	FM1 Test

TBR LOG

ITEM	SECTION	PAGE	SUBJECT	RESPONSIBLE	DUE
TBR 001	1.1 (3a)	10	Non–Flight harness connector number assignments	S. Holaday (MMC)	12–30–94
TBR 002	Table IIa Table IIb	20 21	C&T and Low Rate Bus Connector Type CERES–Fore and CERES–Aft	S. Holaday (MMC)	9–30–93
TBR 003	Table IIa Table IIb	20 21	TM&F Bus Connector Type – CERES–Fore and CERES–Aft	S. Holaday (MMC)	9–30–93
TBR 004	Table IIIa Table IIIb Table IIIc Table IIId	22 23 24 25	Pin Functions – Feeds A and B – CERES–Fore and CERES–Aft	G. Uyeno (TRW)	CERES CDR

1 HARNESSES

1.1 Harness Definition

1. The block diagram of the harnesses utilized by CERES are shown in Figures 1a – 4b. (All harnesses are supplied by the Spacecraft Integrator.)

2. The harness lengths are given in Tables Ia and Ib. The harness length given is the total length of the harness from the instrument to the spacecraft component providing or receiving the signal. Also included in Tables Ia and Ib is the total number of connector pairs present in a harness including the connector mating half on the instrument and on the spacecraft component. Each harness is referenced by the Harness Segment ID between the instrument and the Interface Connector Panel (ICP) shown in Figures 1a and 1b.

3. The list of connectors mating to CERES used by the Spacecraft Integrator to fabricate the CERES harnesses is shown in Tables IIa and IIb.

   a. Spacecraft harness connector numbers are assigned to denote the subsystem, component, and approximate location of the component on the spacecraft. Non–flight connector numbers are preceded by an X. **(TBR 001)**

   b. The interconnections are shown in Tables NO TAG – NO TAG. The following legend is used for wire type:

Coax	Coaxial transmission line
SC	Single conductor, unshielded
SCS	Single conductor, shielded
Tn	Twisted bundle of n wires, unshielded
TnS	Twisted bundle of n wires, shielded
Twinax	Twinaxial transmission line
Triax	Triaxial transmission line

   c. All harnesses which are required by PN20005869, EOS–AM Spacecraft EMC Control Plan, to have an overall outer shield have either a copper tape over–wrap or a braid shield.

      The copper tape is actually copper–plated mylar which is one inch wide. The tape is then folded over 1/8 inch, making it 7/8 inch wide. The tape is 0.0017 inches thick (0.0007 inch copper on 0.001 inch mylar). The wrap is lapped half its width.

      Cables using a braid shield use braids similar to MIL–C–27500.

1.2 Interface Circuits

The interface circuits are shown in Figures 5 through 11.

1.3 Timing Diagrams

The timing diagrams are shown in Figures 12 through 17.

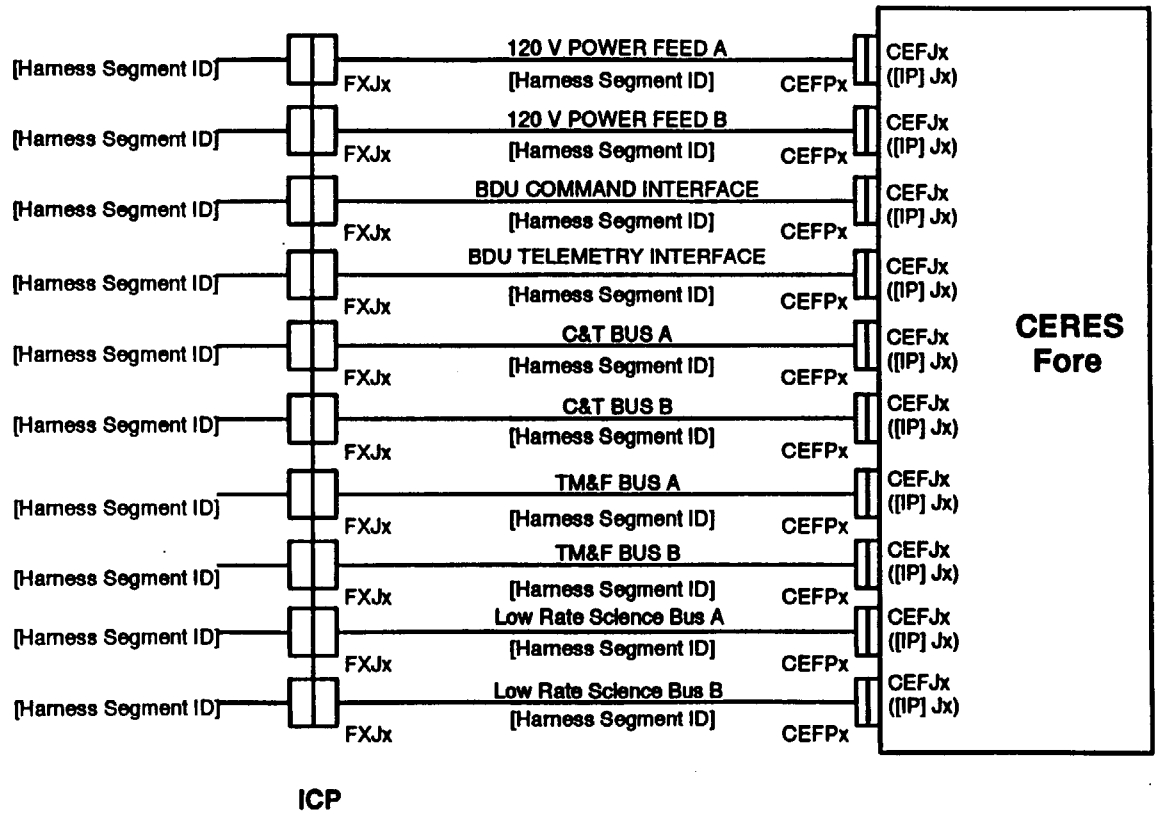

Notes:

ICP – Interface Connector Panel

1. Connector numbers are **(TBD 001)**.
2. Harness Segment ID numbers are **(TBD 002)**.

Figure 1a. Harness Block Diagram – CERES–Fore/Spacecraft Interface

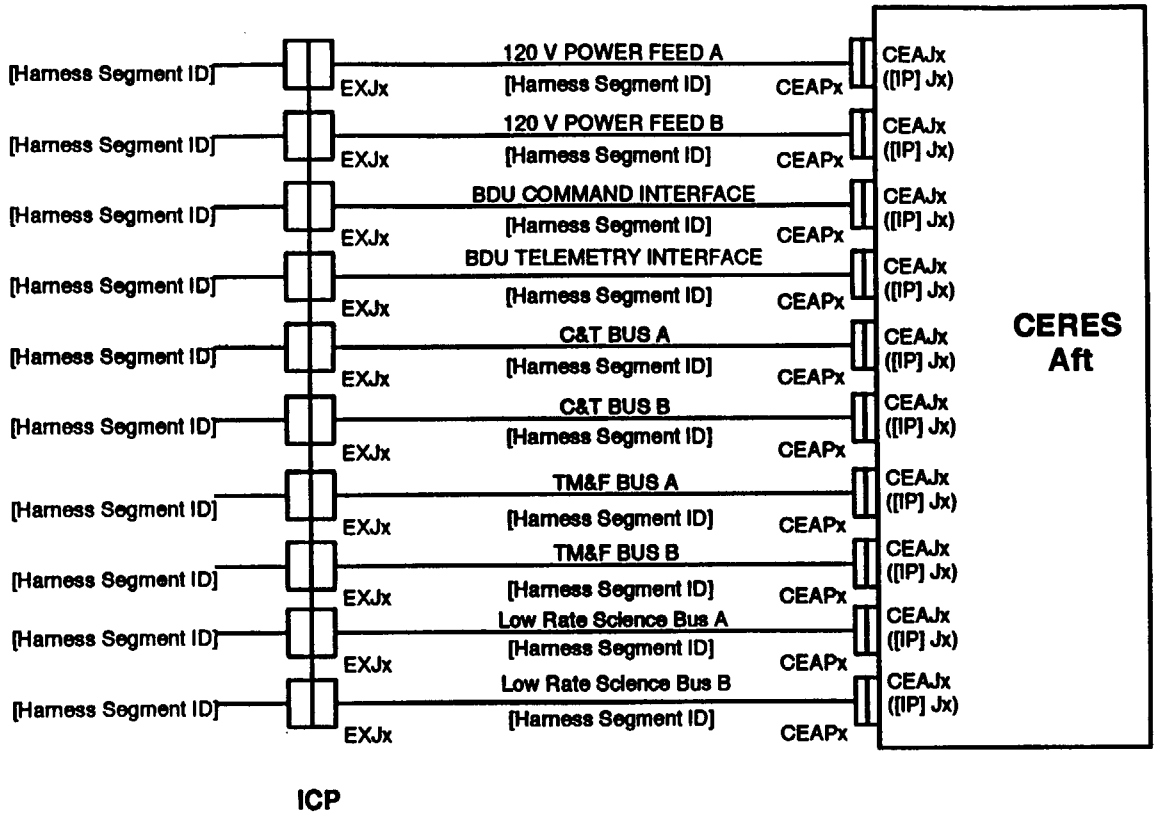

Notes:

ICP – Interface Connector Panel

1. Connector numbers are **(TBD 001)**
2. Harness Segment ID numbers are **(TBD 002)**.

Figure 1b. Harness Block Diagram – CERES–Aft/Spacecraft Interface

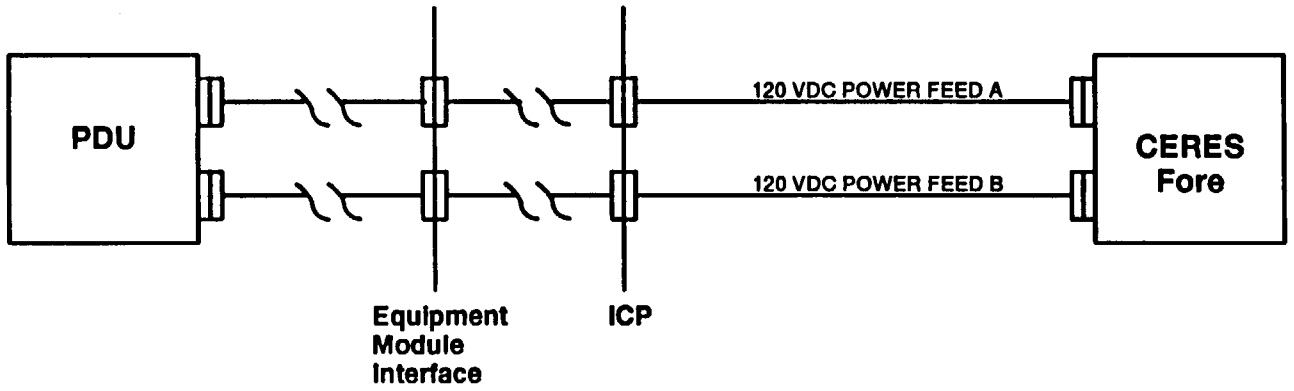

Notes:

ICP – Interface Connector Panel

PDU – Power Distribution Unit

Figure 2a. Harness Block Diagram – CERES–Fore/Power

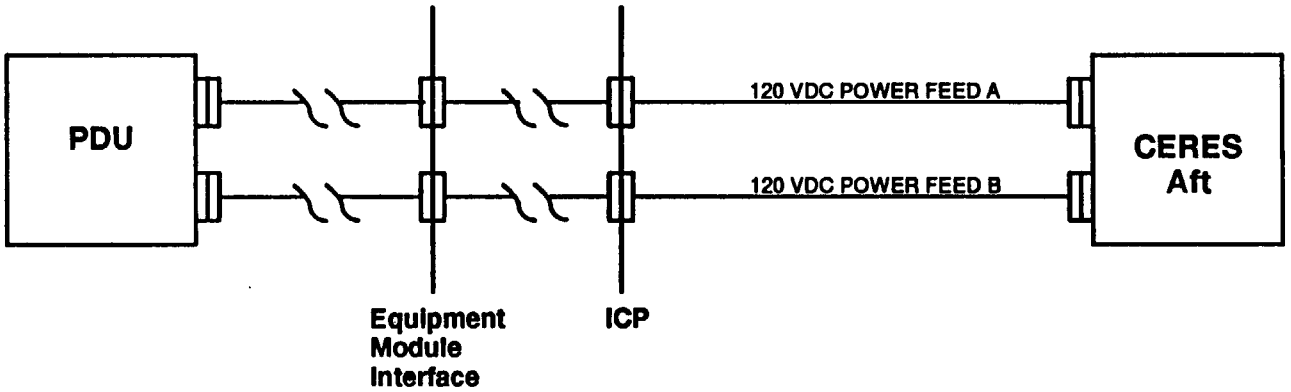

Notes:

ICP – Interface Connector Panel

PDU – Power Distribution Unit

Figure 2b. Harness Block Diagram – CERES–Aft/Power

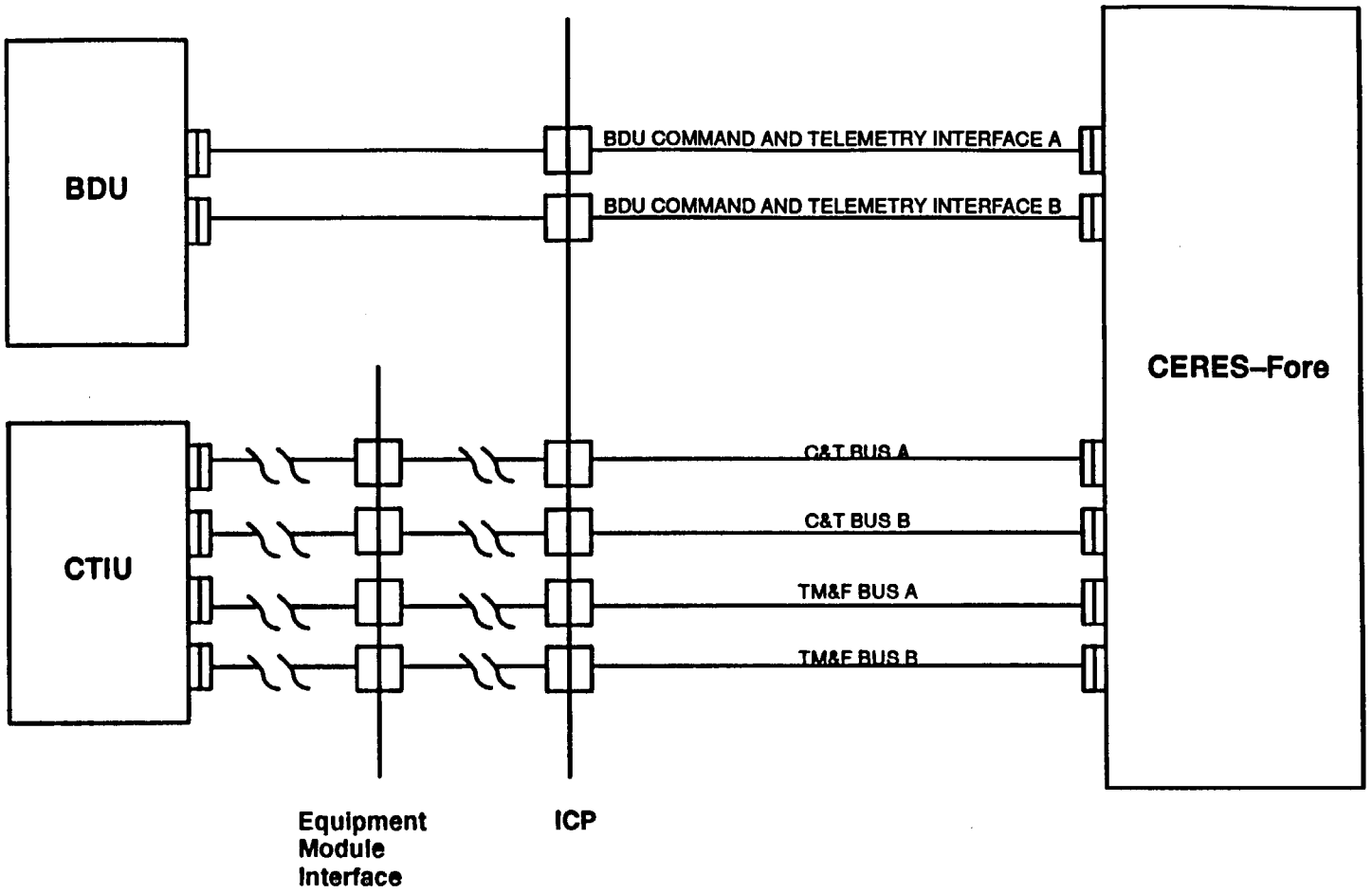

Notes:

ICP – Interface Connector Panel

BDU – Bus Data Unit

CTIU – Command and Telemetry Interface Unit

Figure 3a. Harness Block Diagram – CERES–Fore/Command and Telemetry Interface

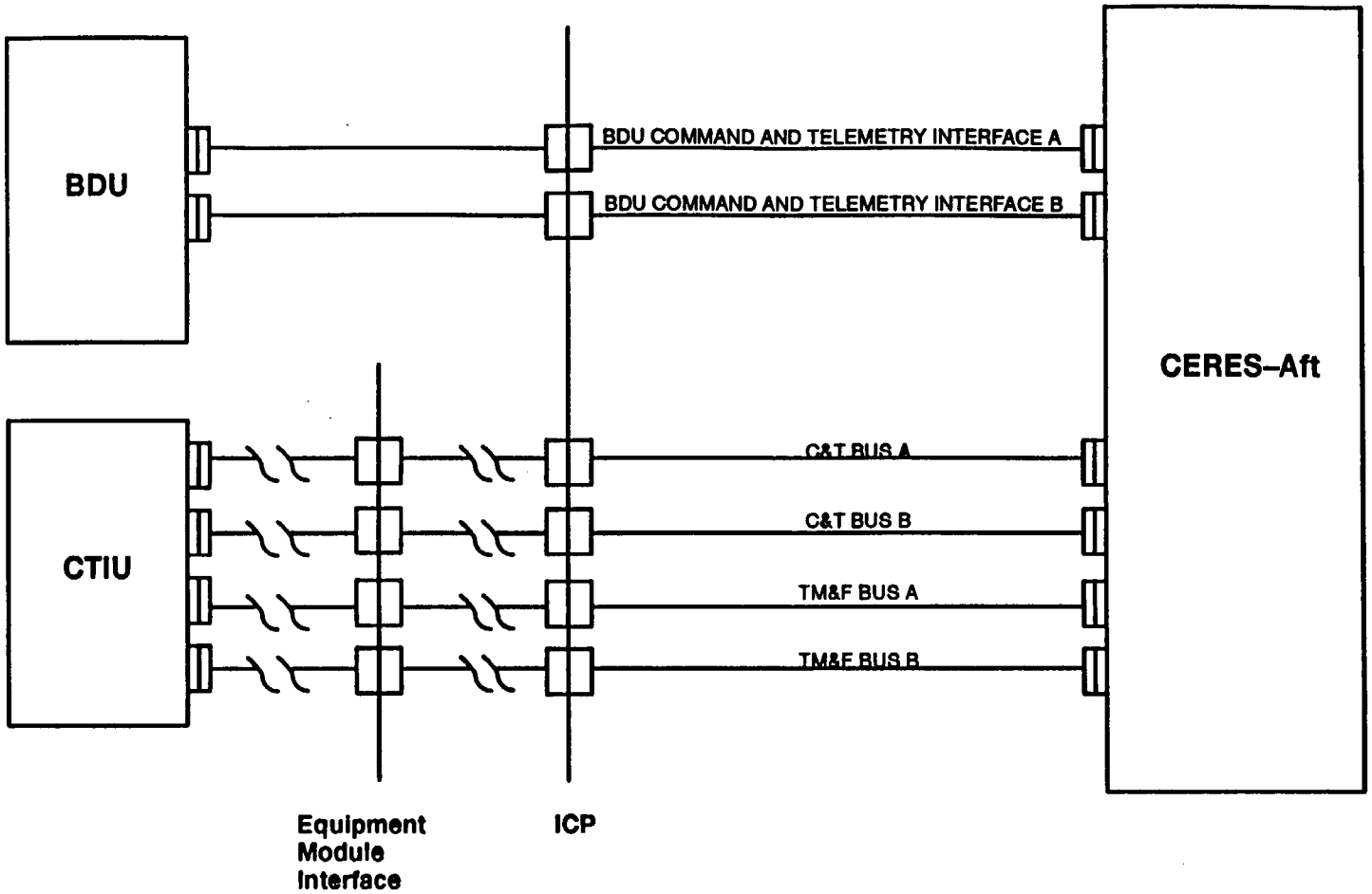

Notes:

ICP – Interface Connector Panel

BDU – Bus Data Unit

CTIU – Command and Telemetry Interface Unit

Figure 3b. Harness Block Diagram – CERES–Aft/Command and Telemetry Interface

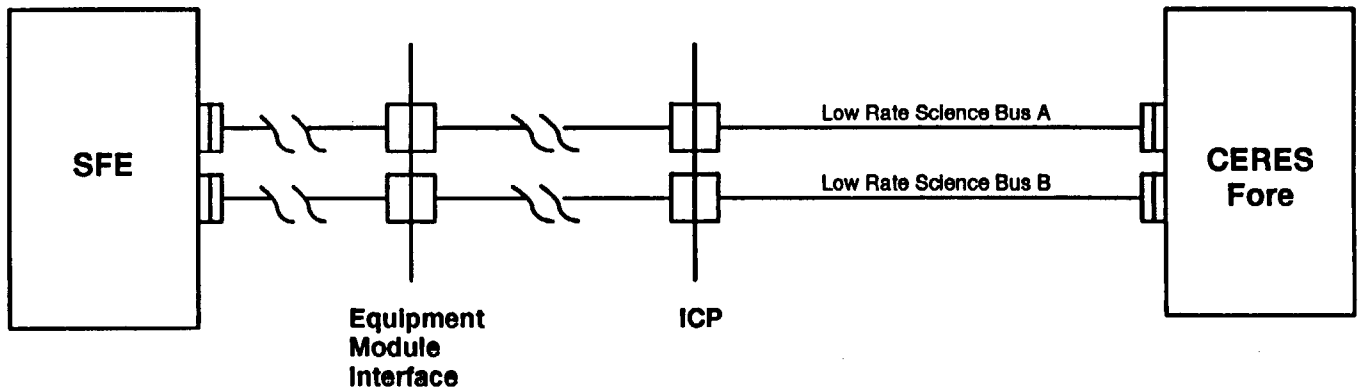

Notes:

ICP – Interface Connector Panel

SFE – Science Formatting Equipment

Figure 4a. Harness Block Diagram – CERES–Fore/Science Interface

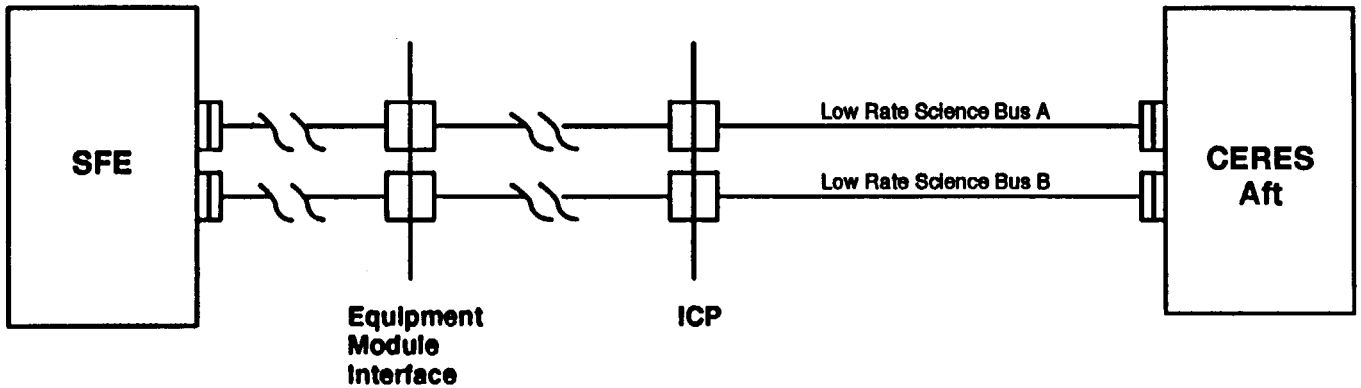

Notes:

ICP – Interface Connector Panel

SFE – Science Formatting Equipment

Figure 4b. Harness Block Diagram – CERES–Aft/Science Interface

Table Ia. Harness Length – CERES–Fore

Description	Instrument Harness Segment ID (TBD 002)	Total # of Segments (TBD 003)	Total # of Connector Pairs (TBD 003)	Total Length (meters) (TBD 004)	Figure #
120V Power Feed A					2a
120V Power Feed B					2a
BDU Cmd I/F					3a
BDU Tlm I/F					3a
TM&F Bus A					3a
TM&F Bus B					3a
C&T Bus A					3a
C&T Bus B					3a
Low Rate Sci. Bus A					4a
Low Rate Sci. Bus B					4a

Table Ib. Harness Length – CERES–Aft

Description	Instrument Harness Segment ID (TBD 002)	Total # of Segments (TBD 003)	Total # of Connector Pairs (TBD 003)	Total Length (meters) (TBD 004)	Figure #
120V Power Feed A					2b
120V Power Feed B					2b
BDU Cmd I/F					3b
BDU Tlm I/F					3b
TM&F Bus A					3b
TM&F Bus B					3b
C&T Bus A					3b
C&T Bus B					3b
Low Rate Sci. Bus A					4b
Low Rate Sci. Bus B					4b

Table IIa. Connector List – CERES–Fore

Component Connector		Harness Connector		MICD Drawing Location		Function
Designation (TBD 005)	Type	Designation (TBD 006)	Type	Sheet	Zone	
CEFJx	MS27508E14F18P	CEFPx	MS27484T14F18S	14	D5	CERES–Fore 120V Power – Feed A
CEFJx	MS27508E14F18P	CEFPx	MS27484T14F18S	14	D5	CERES–Fore 120V Power – Feed B
CEFJx	Raychem D–621–0412–P **(TBR 002)**	CEFPx	Raychem D–621–0411–S **(TBR 002)**	14	D5	CERES–Fore Command and Telemetry Bus A
CEFJx	Raychem D–621–0412–P **(TBR 002)**	CEFPx	Raychem D–621–0411–S **(TBR 002)**	14	D5	CERES–Fore Command and Telemetry Bus B
CEFJx	Trompeter BJ3159AC–221 **(TBR 003)**	CEFPx	Trompeter PL3155AC–221 **(TBR 003)**	14	D5	CERES–Fore Time Mark and Frequency Bus – Side A
CEFJx	Trompeter BJ3159AC–221 **(TBR 003)**	CEFPx	Trompeter PL3155AC–221 **(TBR 003)**	14	D5	CERES–Fore Time Mark and Frequency Bus – Side B
CEFJx	Raychem D–621–0412–P **(TBR 002)**	CEFPx	Raychem D–621–0411–S **(TBR 002)**	14	D5	CERES–Fore Low Rate Science Data Bus A
CEFJx	Raychem D–621–0412–P **(TBR 002)**	CEFPx	Raychem D–621–0411–S **(TBR 002)**	14	D5	CERES–Fore Low Rate Science Data Bus B
CEFJx	MS27508E16F35S	CEFPx	MS27484T16F35P	14	D5	CERES–Fore Cmd I/F
CEFJx	MS27508E16F35S	CEFPx	MS27484T16F35P	14	D5	CERES–Fore Tlm I/F

Table IIb. Connector List – CERES–Aft

Component Connector		Harness Connector		MICD Drawing Location		Function
Designation (TBD 005)	Type	Designation (TBD 006)	Type	Sheet	Zone	
CEAJx	MS27508E14F18P	CEAPx	MS27484T14F18S	14	D5	CERES–Aft 120V Power – Feed A
CEAJx	MS27508E14F18P	CEAPx	MS27484T14F18S	14	D5	CERES–Aft 120V Power – Feed B
CEAJx	Raychem D–621–0412–P **(TBR 002)**	CEAPx	Raychem D–621–0411–S **(TBR 002)**	14	D5	CERES–Aft Command and Telemetry Bus A
CEAJx	Raychem D–621–0412–P **(TBR 002)**	CEAPx	Raychem D–621–0411–S **(TBR 002)**	14	D5	CERES–Aft Command and Telemetry Bus B
CEAJx	Trompeter BJ3159AC–221 **(TBR 003)**	CEAPx	Trompeter PL3155AC–221 **(TBR 003)**	14	D5	CERES–Aft Time Mark and Frequency Bus – Side A
CEAJx	Trompeter BJ3159AC–221 **(TBR 003)**	CEAPx	Trompeter PL3155AC–221 **(TBR 003)**	14	D5	CERES–Aft Time Mark and Frequency Bus – Side B
CEAJx	Raychem D–621–0412–P **(TBR 002)**	CEAPx	Raychem D–621–0411–S **(TBR 002)**	14	D5	CERES–Aft Low Rate Science Data Bus A
CEAJx	Raychem D–621–0412–P **(TBR 002)**	CEAPx	Raychem D–621–0411–S **(TBR 002)**	14	D5	CERES–Aft Low Rate Science Data Bus B
CEAJx	MS27508E16F35S	CEAPx	MS27484T16F35P	14	D5	CERES–Aft Cmd I/F
CEAJx	MS27508E16F35S	CEAPx	MS27484T16F35P	14	D5	CERES–Aft Tlm I/F

Table IIIa. CEFP1: Power – Feed A Interconnections – CERES–Fore

Pin	Function (TBR 004)	Destination (TBD 007) Connector	Destination (TBD 007) Pin	Wire Size	Wire Type	Twist Group	Shield Group (TBD 008)	Color (TBD 009)	Interface Circuit (Figure #)	Timing Diagram (Figure #)	Notes
A	CERES–Fore Fault Gnd A	FXJx	A	20	T5S	001			5	N/A	1.
B	CERES–Fore 120 V Feed A Rtn –1	FXJx	B	20	T5S	001			5	N/A	1.
C	CERES–Fore 120 V Feed A Pos –1	FXJx	C	20	T5S	001			5	N/A	1.
D	Spare										
E	CERES–Fore 120 V Feed A Pos –2	FXJx	E	20	T5S	001			5	N/A	1.
F	CERES–Fore 120 V Feed A Rtn –2	FXJx	F	20	T5S	001			5	N/A	1.
G	Spare										
H	Spare										
J	Spare										
K	Spare										
L	Spare										
M	Spare										
N	Spare										
O	Spare										
P	Spare										
Q	Spare										
R	Spare										
S	Spare										

1. Interface cable outer shield bonded to shell of harness connector.

Table IIIb. CEAP1: Power – Feed A Interconnections – CERES–Aft

Pin	Function (TBR 004)	Destination (TBD 007) Connector	Destination (TBD 007) Pin	Wire Size	Wire Type	Twist Group	Shield Group (TBD 008)	Color (TBD 009)	Interface Circuit (Figure #)	Timing Diagram (Figure #)	Notes
A	CERES–Aft Fault Gnd A	EXJx	A	20	T5S	001			5	N/A	1.
B	CERES–Aft 120 V Feed A Rtn –1	EXJx	B	20	T5S	001			5	N/A	1.
C	CERES–Aft 120 V Feed A Pos –1	EXJx	C	20	T5S	001			5	N/A	1.
D	Spare										
E	CERES–Aft 120 V Feed A Pos –2	EXJx	E	20	T5S	001			5	N/A	1.
F	CERES–Aft 120 V Feed A Rtn –2	EXJx	F	20	T5S	001			5	N/A	1.
G	Spare										
H	Spare										
J	Spare										
K	Spare										
L	Spare										
M	Spare										
N	Spare										
O	Spare										
P	Spare										
Q	Spare										
R	Spare										
S	Spare										

1. Interface cable outer shield bonded to shell of harness connector.

Table IIIc. CEFP2: Power – Feed B Interconnections – CERES–Fore

Pin	Function (TBR 004)	Destination (TBD 007) Connector	Destination (TBD 007) Pin	Wire Size	Wire Type	Twist Group	Shield Group (TBD 008)	Color (TBD 009)	Interface Circuit (Figure #)	Timing Diagram (Figure #)	Notes
A	CERES–Fore Fault Gnd B	FXJx	A	20	T5S	001			5	N/A	1.
B	CERES–Fore 120 V Feed B Rtn –1	FXJx	B	20	T5S	001			5	N/A	1.
C	CERES–Fore 120 V Feed B Pos –1	FXJx	C	20	T5S	001			5	N/A	1.
D	Spare										
E	CERES–Fore 120 V Feed B Pos –2	FXJx	E	20	T5S	001			5	N/A	1.
F	CERES–Fore 120 V Feed B Rtn –2	FXJx	F	20	T5S	001			5	N/A	1.
G	Spare										
H	Spare										
J	Spare										
K	Spare										
L	Spare										
M	Spare										
N	Spare										
O	Spare										
P	Spare										
Q	Spare										
R	Spare										
S	Spare										

1. Interface cable outer shield bonded to shell of harness connector.

Table IIId. CEAP2: Power – Feed B Interconnections – CERES–Aft

Pin	Function (TBR 004)	Destination (TBD 007) Connector	Destination (TBD 007) Pin	Wire Size	Wire Type	Twist Group	Shield Group (TBD 008)	Color (TBD 009)	Interface Circuit (Figure #)	Timing Diagram (Figure #)	Notes
A	CERES–Aft Fault Gnd B	EXJx	A	20	T5S	001			5	N/A	1.
B	CERES–Aft 120 V Feed B Rtn –1	EXJx	B	20	T5S	001			5	N/A	1.
C	CERES–Aft 120 V Feed B Pos –1	EXJx	C	20	T5S	001			5	N/A	1.
D	Spare										
E	CERES–Aft 120 V Feed B Pos –2	EXJx	E	20	T5S	001			5	N/A	1.
F	CERES–Aft 120 V Feed B Rtn –2	EXJx	F	20	T5S	001			5	N/A	1.
G	Spare										
H	Spare										
J	Spare										
K	Spare										
L	Spare										
M	Spare										
N	Spare										
O	Spare										
P	Spare										
Q	Spare										
R	Spare										
S	Spare										

1. Interface cable outer shield bonded to shell of harness connector.

Table IIIe. CEFP3: C&T Bus A Interconnections – CERES–Fore

Contact	Function	Destination (TBD 010)		Wire Size	Wire Type	Twist Group	Shield Group	Color (TBD 009)	Interface Circuit (Figure #)	Timing Diagram (Figure #)	Notes
		Connector	Pin								
Center	CERES–Fore C&T Bus A Hi	FXJx	Center	24	Twin ax	N/A	N/A		6	12	1.
Intermediate	CERES–Fore C&T Bus A Lo	FXJx	Intermediate	24	Twin ax	N/A	N/A		6	12	1.
Outer shield	CERES–Fore C&T Bus A Shld	FXJx	Outer Shield	N/A	Twin ax	N/A	N/A		6	12	1.

Table IIIf. CEAP3: C&T Bus A Interconnections – CERES–Aft

Contact	Function	Destination (TBD 010)		Wire Size	Wire Type	Twist Group	Shield Group	Color (TBD 009)	Interface Circuit (Figure #)	Timing Diagram (Figure #)	Notes
		Connector	Pin								
Center	CERES–Aft C&T Bus A Hi	EXJx	Center	24	Twin ax	N/A	N/A		6	12	1.
Intermediate	CERES–Aft C&T Bus A Lo	EXJx	Intermediate	24	Twin ax	N/A	N/A		6	12	1.
Outer shield	CERES–Aft C&T Bus A Shld	EXJx	Outer Shield	N/A	Twin ax	N/A	N/A		6	12	1.

Notes:

1. FxJx and ExJx are single triaxial contact connectors.

Table IIIg. CEFP4: C&T Bus B Interconnections – CERES–Fore

Contact	Function	Destination (TBD 010)		Wire Size	Wire Type	Twist Group	Shield Group	Color (TBD 009)	Interface Circuit (Figure #)	Timing Diagram (Figure #)	Notes
		Connector	Pin								
Center	CERES–Fore C&T Bus B Hi	FXJx	Center	24	Twin ax	N/A	N/A		6	12	1.
Intermediate	CERES–Fore C&T Bus B Lo	FXJx	Intermediate	24	Twin ax	N/A	N/A		6	12	1.
Outer shield	CERES–Fore C&T Bus B Shld	FXJx	Outer Shield	N/A	Twin ax	N/A	N/A		6	12	1.

Table IIIh. CEAP4: C&T Bus B Interconnections – CERES–Aft

Contact	Function	Destination (TBD 010)		Wire Size	Wire Type	Twist Group	Shield Group	Color (TBD 009)	Interface Circuit (Figure #)	Timing Diagram (Figure #)	Notes
		Connector	Pin								
Center	CERES–Aft C&T Bus B Hi	EXJx	Center	24	Twin ax	N/A	N/A		6	12	1.
Intermediate	CERES–Aft C&T Bus B Lo	EXJx	Intermediate	24	Twin ax	N/A	N/A		6	12	1.
Outer shield	CERES–Aft C&T Bus B Shld	EXJx	Outer Shield	N/A	Twin ax	N/A	N/A		6	12	1.

Notes:

1. FxJx and ExJx are single triaxial contact connectors.

Table IIII. CEFP5: TM&F Bus – Side A Interconnections – CERES–Fore

Contact	Function	Destination (TBD 011)		Wire Size	Wire Type	Twist Group	Shield Group	Color (TBD 009)	Interface Circuit (Figure #)	Timing Diagram (Figure #)	Notes
		Connector	Pin								
Center	CERES–Fore TM&F Bus A Hi	FXJx	Center	24	Twin ax	N/A	N/A		7	13	1.
Intermediate	CERES–Fore TM&F Bus A Lo	FXJx	Intermediate	24	Twin ax	N/A	N/A		7	13	1.
Outer shield	CERES–Fore TM&F Bus A Shld	FXJx	Outer Shield	N/A	Twin ax	N/A	N/A		7	13	1.

Table IIIJ. CEAP5: TM&F Bus – Side A Interconnections – CERES–Aft

Contact	Function	Destination (TBD 011)		Wire Size	Wire Type	Twist Group	Shield Group	Color (TBD 009)	Interface Circuit (Figure #)	Timing Diagram (Figure #)	Notes
		Connector	Pin								
Center	CERES–Aft TM&F Bus A Hi	EXJx	Center	24	Twin ax	N/A	N/A		7	13	1.
Intermediate	CERES–Aft TM&F Bus A Lo	EXJx	Intermediate	24	Twin ax	N/A	N/A		7	13	1.
Outer shield	CERES–Aft TM&F Bus A Shld	EXJx	Outer Shield	N/A	Twin ax	N/A	N/A		7	13	1.

Notes:

1. FxJx and ExJx are single triaxial contact connectors.

Table IIIk. CEFP6: TM&F Bus – Side B Interconnections – CERES–Fore

Contact	Function	Destination (TBD 011)		Wire Size	Wire Type	Twist Group	Shield Group	Color (TBD 009)	Interface Circuit (Figure #)	Timing Diagram (Figure #)	Notes
		Connector	Pin								
Center	CERES–Fore TM&F Bus B Hi	FXJx	Center	24	Twin ax	N/A	N/A		7	13	1.
Intermediate	CERES–Fore TM&F Bus B Lo	FXJx	Intermediate	24	Twin ax	N/A	N/A		7	13	1.
Outer shield	CERES–Fore TM&F Bus B Shld	FXJx	Outer Shield	N/A	Twin ax	N/A	N/A		7	13	1.

Table IIIm. CEAP6: TM&F Bus – Side B Interconnections – CERES–Aft

Contact	Function	Destination (TBD 011)		Wire Size	Wire Type	Twist Group	Shield Group	Color (TBD 009)	Interface Circuit (Figure #)	Timing Diagram (Figure #)	Notes
		Connector	Pin								
Center	CERES–Aft TM&F Bus B Hi	EXJx	Center	24	Twin ax	N/A	N/A		7	13	1.
Intermediate	CERES–Aft TM&F Bus B Lo	EXJx	Intermediate	24	Twin ax	N/A	N/A		7	13	1.
Outer shield	CERES–Aft TM&F Bus B Shld	EXJx	Outer Shield	N/A	Twin ax	N/A	N/A		7	13	1.

Notes:

1. FxJx and ExJx are single triaxial contact connectors.

Table IIIn. CEFP7: Low Rate Science Data Bus – Side A Interconnections – CERES–Fore

Contact	Function	Destination (TBD 012)		Wire Size	Wire Type	Twist Group	Shield Group	Color (TBD 009)	Interface Circuit (Figure #)	Timing Diagram (Figure #)	Notes
		Connector	Pin								
Center	CERES–Fore LRS Bus A Hi	FXJx	Center	24	Twin ax	N/A	N/A		8	14	1.
Intermediate	CERES–Fore LRS Bus A Lo	FXJx	Intermediate	24	Twin ax	N/A	N/A		8	14	1.
Outer shield	CERES–Fore LRS Bus A Shld	FXJx	Outer Shield	N/A	Twin ax	N/A	N/A		8	14	1.

Table IIIo. CEAP7: Low Rate Science Data Bus – Side A Interconnections – CERES–Aft

Contact	Function	Destination (TBD 012)		Wire Size	Wire Type	Twist Group	Shield Group	Color (TBD 009)	Interface Circuit (Figure #)	Timing Diagram (Figure #)	Notes
		Connector	Pin								
Center	CERES–Aft LRS Bus A Hi	EXJx	Center	24	Twin ax	N/A	N/A		8	14	1.
Intermediate	CERES–Aft LRS Bus A Lo	EXJx	Intermediate	24	Twin ax	N/A	N/A		8	14	1.
Outer shield	CERES–Aft LRS Bus A Shld	EXJx	Outer Shield	N/A	Twin ax	N/A	N/A		8	14	1.

Notes:

1. FxJx and ExJx are single triaxial contact connectors.

Table IIIp. CEFP8: Low Rate Science Data Bus – Side B Interconnections – CERES–Fore

Contact	Function	Destination (TBD 012)		Wire Size	Wire Type	Twist Group	Shield Group	Color (TBD 009)	Interface Circuit (Figure #)	Timing Diagram (Figure #)	Notes
		Connector	Pin								
Center	CERES–Fore LRS Bus B Hi	FXJx	Center	24	Twin ax	N/A	N/A		8	14	1.
Intermediate	CERES–Fore LRS Bus B Lo	FXJx	Intermediate	24	Twin ax	N/A	N/A		8	14	1.
Outer shield	CERES–Fore LRS Bus B Shld	FXJx	Outer Shield	N/A	Twin ax	N/A	N/A		8	14	1.

Table IIIq. CEAP8: Low Rate Science Data Bus – Side B Interconnections – CERES–Aft

Contact	Function	Destination (TBD 012)		Wire Size	Wire Type	Twist Group	Shield Group	Color (TBD 009)	Interface Circuit (Figure #)	Timing Diagram (Figure #)	Notes
		Connector	Pin								
Center	CERES–Aft LRS Bus B Hi	EXJx	Center	24	Twin ax	N/A	N/A		8	14	1.
Intermediate	CERES–Aft LRS Bus B Lo	EXJx	Intermediate	24	Twin ax	N/A	N/A		8	14	1.
Outer shield	CERES–Aft LRS Bus B Shld	EXJx	Outer Shield	N/A	Twin ax	N/A	N/A		8	14	1.

Notes:

1. FxJx and ExJx are single triaxial contact connectors.

Table IIIr–1. CEFP9: BDU Relay Drive Commands – Side A Interconnections – CERES–Fore

Pin	Function (TBD 013)	Destination (TBD 013) Connector	Destination (TBD 013) Pin	Wire Size	Wire Type	Twist Group (TBD 014)	Shield Group (TBD 008)	Color (TBD 009)	Interface Circuit (Figure #)	Timing Diagram (Figure #)	Notes
1		FXPx		24	T2				9	15	1., 2.
2		FXPx		24	T2				9	15	1., 2.
3		FXPx		24	T2				9	15	1., 2.
4		FXPx		24	T2				9	15	1., 2.
5		FXPx		24	T2				9	15	1., 2.
6		FXPx		24	T2				9	15	1., 2.
7		FXPx		24	T2				9	15	1., 2.
8		FXPx		24	T2				9	15	1., 2.
9		FXPx		24	T2				9	15	1., 2.
10		FXPx		24	T2				9	15	1., 2.
11		FXPx		24	T2				9	15	1., 2.
12		FXPx		24	T2				9	15	1., 2.
13		FXPx		24	T2				9	15	1., 2.
14		FXPx		24	T2				9	15	1., 2.
15		FXPx		24	T2				9	15	1., 2.
16		FXPx		24	T2				9	15	1., 2.
17		FXPx		24	T2				9	15	1., 2.
18		FXPx		24	T2				9	15	1., 2.

Notes:

1. All twisted pair signals will be enclosed in an overall shield.
2. Interface cable outer shield bonded to shell of harness connector.

Table IIIr–2. CEFP9: BDU Passive Bi–Level Telemetry – Side A Interconnections – CERES–Fore

Pin	Function (TBD 015)	Destination (TBD 015) Connector	Destination (TBD 015) Pin	Wire Size	Wire Type	Twist Group (TBD 014)	Shield Group (TBD 008)	Color (TBD 009)	Interface Circuit (Figure #)	Timing Diagram (Figure #)	Notes
19		FXPx		24	T2				10	16	1., 2.
20		FXPx		24	T2				10	16	1., 2.
21		FXPx		24	T2				10	16	1., 2.
22		FXPx		24	T2				10	16	1., 2.
23		FXPx		24	T2				10	16	1., 2.
24		FXPx		24	T2				10	16	1., 2.
25		FXPx		24	T2				10	16	1., 2.
26		FXPx		24	T2				10	16	1., 2.
27		FXPx		24	T2				10	16	1., 2.
28		FXPx		24	T2				10	16	1., 2.
29		FXPx		24	T2				10	16	1., 2.
30		FXPx		24	T2				10	16	1., 2.
31		FXPx		24	T2				10	16	1., 2.
32		FXPx		24	T2				10	16	1., 2.
33		FXPx		24	T2				10	16	1., 2.
34		FXPx		24	T2				10	16	1., 2.
35		FXPx		24	T2				10	16	1., 2.
36		FXPx		24	T2				10	16	1., 2.

Notes:

1. All twisted pair signals will be enclosed in an overall shield.
2. Interface cable outer shield bonded to shell of harness connector.

Table IIIr–3. CEFP9: BDU Passive Analog Telemetry – Side A Interconnections – CERES–Fore

Pin	Function (TBD 016)	Destination (TBD 016)		Wire Size	Wire Type	Twist Group (TBD 014)	Shield Group (TBD 008)	Color (TBD 009)	Interface Circuit	Timing Diagram	Notes
		Connector	Pin								
37		FXPx		24	T2				11	17	1., 2.
38		FXPx		24	T2				11	17	1., 2.
39		FXPx		24	T2				11	17	1., 2.
40		FXPx		24	T2				11	17	1., 2.
41		FXPx		24	T2				11	17	1., 2.
42		FXPx		24	T2				11	17	1., 2.
43		FXPx		24	T2				11	17	1., 2.
44		FXPx		24	T2				11	17	1., 2.
45		FXPx		24	T2				11	17	1., 2.
46		FXPx		24	T2				11	17	1., 2.
47		FXPx		24	T2				11	17	1., 2.
48		FXPx		24	T2				11	17	1., 2.
49		FXPx		24	T2				11	17	1., 2.
50		FXPx		24	T2				11	17	1., 2.
51		FXPx		24	T2				11	17	1., 2.
52		FXPx		24	T2				11	17	1., 2.
53		FXPx		24	T2				11	17	1., 2.
54		FXPx		24	T2				11	17	1., 2.
55		FXPx		24	T2				11	17	1., 2.

Notes

1. All twisted pair signals will be enclosed in an overall shield.
2. Interface cable outer shield bonded to shell of harness connector.

Table IIIs–1. CEAP9: BDU Relay Drive Commands – Side A Interconnections – CERES–Aft

Pin	Function (TBD 013)	Destination (TBD 013)		Wire Size	Wire Type	Twist Group (TBD 014)	Shield Group (TBD 008)	Color (TBD 009)	Interface Circuit (Figure #)	Timing Diagram (Figure #)	Notes
		Connector	Pin								
1		EXPx		24	T2				9	15	1., 2.
2		EXPx		24	T2				9	15	1., 2.
3		EXPx		24	T2				9	15	1., 2.
4		EXPx		24	T2				9	15	1., 2.
5		EXPx		24	T2				9	15	1., 2.
6		EXPx		24	T2				9	15	1., 2.
7		EXPx		24	T2				9	15	1., 2.
8		EXPx		24	T2				9	15	1., 2.
9		EXPx		24	T2				9	15	1., 2.
10		EXPx		24	T2				9	15	1., 2.
11		EXPx		24	T2				9	15	1., 2.
12		EXPx		24	T2				9	15	1., 2.
13		EXPx		24	T2				9	15	1., 2.
14		EXPx		24	T2				9	15	1., 2.
15		EXPx		24	T2				9	15	1., 2.
16		EXPx		24	T2				9	15	1., 2.
17		EXPx		24	T2				9	15	1., 2.
18		EXPx		24	T2				9	15	1., 2.

Notes:

1. All twisted pair signals will be enclosed in an overall shield.
2. Interface cable outer shield bonded to shell of harness connector.

Table IIIs–2. CEAP9: BDU Passive Bi–Level Telemetry – Side A Interconnections – CERES–Aft

Pin	Function (TBD 015)	Destination (TBD 015)		Wire Size	Wire Type	Twist Group (TBD 014)	Shield Group (TBD 008)	Color (TBD 009)	Interface Circuit (Figure #)	Timing Diagram (Figure #)	Notes
		Connector	Pin								
19		EXPx		24	T2				10	16	1., 2.
20		EXPx		24	T2				10	16	1., 2.
21		EXPx		24	T2				10	16	1., 2.
22		EXPx		24	T2				10	16	1., 2.
23		EXPx		24	T2				10	16	1., 2.
24		EXPx		24	T2				10	16	1., 2.
25		EXPx		24	T2				10	16	1., 2.
26		EXPx		24	T2				10	16	1., 2.
27		EXPx		24	T2				10	16	1., 2.
28		EXPx		24	T2				10	16	1., 2.
29		EXPx		24	T2				10	16	1., 2.
30		EXPx		24	T2				10	16	1., 2.
31		EXPx		24	T2				10	16	1., 2.
32		EXPx		24	T2				10	16	1., 2.
33		EXPx		24	T2				10	16	1., 2.
34		EXPx		24	T2				10	16	1., 2.
35		EXPx		24	T2				10	16	1., 2.
36		EXPx		24	T2				10	16	1., 2.

Notes:

1. All twisted pair signals will be enclosed in an overall shield.
2. Interface cable outer shield bonded to shell of harness connector.

Table IIIs–3. CEAP9: BDU Passive Analog Telemetry – Side A Interconnections – CERES–Aft

Pin	Function (TBD 016)	Destination (TBD 016)		Wire Size	Wire Type	Twist Group (TBD 014)	Shield Group (TBD 008)	Color (TBD 009)	Interface Circuit (Figure #)	Timing Diagram (Figure #)	Notes
		Connector	Pin								
37		EXPx		24	T2				11	17	1., 2.
38		EXPx		24	T2				11	17	1., 2.
39		EXPx		24	T2				11	17	1., 2.
40		EXPx		24	T2				11	17	1., 2.
41		EXPx		24	T2				11	17	1., 2.
42		EXPx		24	T2				11	17	1., 2.
43		EXPx		24	T2				11	17	1., 2.
44		EXPx		24	T2				11	17	1., 2.
45		EXPx		24	T2				11	17	1., 2.
46		EXPx		24	T2				11	17	1., 2.
47		EXPx		24	T2				11	17	1., 2.
48		EXPx		24	T2				11	17	1., 2.
49		EXPx		24	T2				11	17	1., 2.
50		EXPx		24	T2				11	17	1., 2.
51		EXPx		24	T2				11	17	1., 2.
52		EXPx		24	T2				11	17	1., 2.
53		EXPx		24	T2				11	17	1., 2.
54		EXPx		24	T2				11	17	1., 2.
55		EXPx		24	T2				11	17	1., 2.

Notes:

1. All twisted pair signals will be enclosed in an overall shield.
2. Interface cable outer shield bonded to shell of harness connector.

Table IIIt–1. CEFP10: BDU Relay Drive Commands – Side B Interconnections – CERES–Fore

Pin	Function (TBD 013)	Destination (TBD 013) Connector	Destination (TBD 013) Pin	Wire Size	Wire Type	Twist Group (TBD 014)	Shield Group (TBD 008)	Color (TBD 009)	Interface Circuit (Figure #)	Timing Diagram (Figure #)	Notes
1		FXPx		24	T2				9	15	1., 2.
2		FXPx		24	T2				9	15	1., 2.
3		FXPx		24	T2				9	15	1., 2.
4		FXPx		24	T2				9	15	1., 2.
5		FXPx		24	T2				9	15	1., 2.
6		FXPx		24	T2				9	15	1., 2.
7		FXPx		24	T2				9	15	1., 2.
8		FXPx		24	T2				9	15	1., 2.
9		FXPx		24	T2				9	15	1., 2.
10		FXPx		24	T2				9	15	1., 2.
11		FXPx		24	T2				9	15	1., 2.
12		FXPx		24	T2				9	15	1., 2.
13		FXPx		24	T2				9	15	1., 2.
14		FXPx		24	T2				9	15	1., 2.
15		FXPx		24	T2				9	15	1., 2.
16		FXPx		24	T2				9	15	1., 2.
17		FXPx		24	T2				9	15	1., 2.
18		FXPx		24	T2				9	15	1., 2.

Notes:

1. All twisted pair signals will be enclosed in an overall shield.
2. Interface cable outer shield bonded to shell of harness connector.

Table IIIt–2. CEFP10: BDU Passive Bi–Level Telemetry – Side B Interconnections – CERES Fore

Pin	Function (TBD 015)	Destination (TBD 015)		Wire Size	Wire Type	Twist Group (TBD 014)	Shield Group (TBD 008)	Color (TBD 009)	Interface Circuit (Figure #)	Timing Diagram (Figure #)	Notes
		Connector	Pin								
19		FXPx		24	T2				10	16	1., 2.
20		FXPx		24	T2				10	16	1., 2.
21		FXPx		24	T2				10	16	1., 2.
22		FXPx		24	T2				10	16	1., 2.
23		FXPx		24	T2				10	16	1., 2.
24		FXPx		24	T2				10	16	1., 2.
25		FXPx		24	T2				10	16	1., 2.
26		FXPx		24	T2				10	16	1., 2.
27		FXPx		24	T2				10	16	1., 2.
28		FXPx		24	T2				10	16	1., 2.
29		FXPx		24	T2				10	16	1., 2.
30		FXPx		24	T2				10	16	1., 2.
31		FXPx		24	T2				10	16	1., 2.
32		FXPx		24	T2				10	16	1., 2.
33		FXPx		24	T2				10	16	1., 2.
34		FXPx		24	T2				10	16	1., 2.
35		FXPx		24	T2				10	16	1., 2.
36		FXPx		24	T2				10	16	1., 2.

Notes:

1. All twisted pair signals will be enclosed in an overall shield.
2. Interface cable outer shield bonded to shell of harness connector.

Table IIIt–3. CEFP10: BDU Passive Analog Telemetry – Side B Interconnections – CERES–Fore

Pin	Function (TBD 016)	Destination (TBD 016)		Wire Size	Wire Type	Twist Group (TBD 014)	Shield Group (TBD 008)	Color (TBD 009)	Interface Circuit (Figure #)	Timing Diagram (Figure #)	Notes
		Connector	Pin								
37		FXPx		24	T2				11	17	1., 2.
38		FXPx		24	T2				11	17	1., 2.
39		FXPx		24	T2				11	17	1., 2.
40		FXPx		24	T2				11	17	1., 2.
41		FXPx		24	T2				11	17	1., 2.
42		FXPx		24	T2				11	17	1., 2.
43		FXPx		24	T2				11	17	1., 2.
44		FXPx		24	T2				11	17	1., 2.
45		FXPx		24	T2				11	17	1., 2.
46		FXPx		24	T2				11	17	1., 2.
47		FXPx		24	T2				11	17	1., 2.
48		FXPx		24	T2				11	17	1., 2.
49		FXPx		24	T2				11	17	1., 2.
50		FXPx		24	T2				11	17	1., 2.
51		FXPx		24	T2				11	17	1., 2.
52		FXPx		24	T2				11	17	1., 2.
53		FXPx		24	T2				11	17	1., 2.
54		FXPx		24	T2				11	17	1., 2.
55		FXPx		24	T2				11	17	1., 2.

Notes:

1. All twisted pair signals will be enclosed in an overall shield.
2. Interface cable outer shield bonded to shell of harness connector.

Table Illu–1. CEAP10: BDU Relay Drive Commands – Side B Interconnections – CERES–Aft

Pin	Function (TBD 013)	Destination (TBD 013)		Wire Size	Wire Type	Twist Group (TBD 014)	Shield Group (TBD 008)	Color (TBD 009)	Interface Circuit	Timing Diagram	Notes
		Connector	Pin								
1		EXPx		24	T2				9	15	1., 2.
2		EXPx		24	T2				9	15	1., 2.
3		EXPx		24	T2				9	15	1., 2.
4		EXPx		24	T2				9	15	1., 2.
5		EXPx		24	T2				9	15	1., 2.
6		EXPx		24	T2				9	15	1., 2.
7		EXPx		24	T2				9	15	1., 2.
8		EXPx		24	T2				9	15	1., 2.
9		EXPx		24	T2				9	15	1., 2.
10		EXPx		24	T2				9	15	1., 2.
11		EXPx		24	T2				9	15	1., 2.
12		EXPx		24	T2				9	15	1., 2.
13		EXPx		24	T2				9	15	1., 2.
14		EXPx		24	T2				9	15	1., 2.
15		EXPx		24	T2				9	15	1., 2.
16		EXPx		24	T2				9	15	1., 2.
17		EXPx		24	T2				9	15	1., 2.
18		EXPx		24	T2				9	15	1., 2.

Notes:

1. All twisted pair signals will be enclosed in an overall shield.
2. Interface cable outer shield bonded to shell of harness connector.

Table Illu–2. CEAP10: BDU Passive Bi–Level Telemetry – Side B Interconnections – CERES–Aft

Pin	Function (TBD 015)	Destination (TBD 015)		Wire Size	Wire Type	Twist Group (TBD 014)	Shield Group (TBD 008)	Color (TBD 009)	Interface Circuit (Figure #)	Timing Diagram (Figure #)	Notes
		Connector	Pin								
19		EXPx		24	T2				10	16	1., 2.
20		EXPx		24	T2				10	16	1., 2.
21		EXPx		24	T2				10	16	1., 2.
22		EXPx		24	T2				10	16	1., 2.
23		EXPx		24	T2				10	16	1., 2.
24		EXPx		24	T2				10	16	1., 2.
25		EXPx		24	T2				10	16	1., 2.
26		EXPx		24	T2				10	16	1., 2.
27		EXPx		24	T2				10	16	1., 2.
28		EXPx		24	T2				10	16	1., 2.
29		EXPx		24	T2				10	16	1., 2.
30		EXPx		24	T2				10	16	1., 2.
31		EXPx		24	T2				10	16	1., 2.
32		EXPx		24	T2				10	16	1., 2.
33		EXPx		24	T2				10	16	1., 2.
34		EXPx		24	T2				10	16	1., 2.
35		EXPx		24	T2				10	16	1., 2.
36		EXPx		24	T2				10	16	1., 2.

Notes:

1. All twisted pair signals will be enclosed in an overall shield.
2. Interface cable outer shield bonded to shell of harness connector.

Table Illu–3. CEAP10: BDU Passive Passive Analog Telemetry – Side B Interconnections – CERES–Aft

Pin	Function (TBD 016)	Destination (TBD 016) Connector	Destination (TBD 016) Pin	Wire Size	Wire Type	Twist Group (TBD 014)	Shield Group (TBD 008)	Color (TBD 009)	Interface Circuit (Figure #)	Timing Diagram (Figure #)	Notes
37		EXPx		24	T2				11	17	1., 2.
38		EXPx		24	T2				11	17	1., 2.
39		EXPx		24	T2				11	17	1., 2.
40		EXPx		24	T2				11	17	1., 2.
41		EXPx		24	T2				11	17	1., 2.
42		EXPx		24	T2				11	17	1., 2.
43		EXPx		24	T2				11	17	1., 2.
44		EXPx		24	T2				11	17	1., 2.
45		EXPx		24	T2				11	17	1., 2.
46		EXPx		24	T2				11	17	1., 2.
47		EXPx		24	T2				11	17	1., 2.
48		EXPx		24	T2				11	17	1., 2.
49		EXPx		24	T2				11	17	1., 2.
50		EXPx		24	T2				11	17	1., 2.
51		EXPx		24	T2				11	17	1., 2.
52		EXPx		24	T2				11	17	1., 2.
53		EXPx		24	T2				11	17	1., 2.
54		EXPx		24	T2				11	17	1., 2.
55		EXPx		24	T2				11	17	1., 2.

Notes:

1. All twisted pair signals will be enclosed in an overall shield.
2. Interface cable outer shield bonded to shell of harness connector.

(TBD 017)

Figure 5. Power Interface Circuit

Size	Code Ident No.		
A	49671	20008825	Sheet 44

(TBD 018)

Figure 6. Command and Telemetry Bus Interface Circuit

Size	Code Ident No.		
A	49671	20008825	Sheet 45

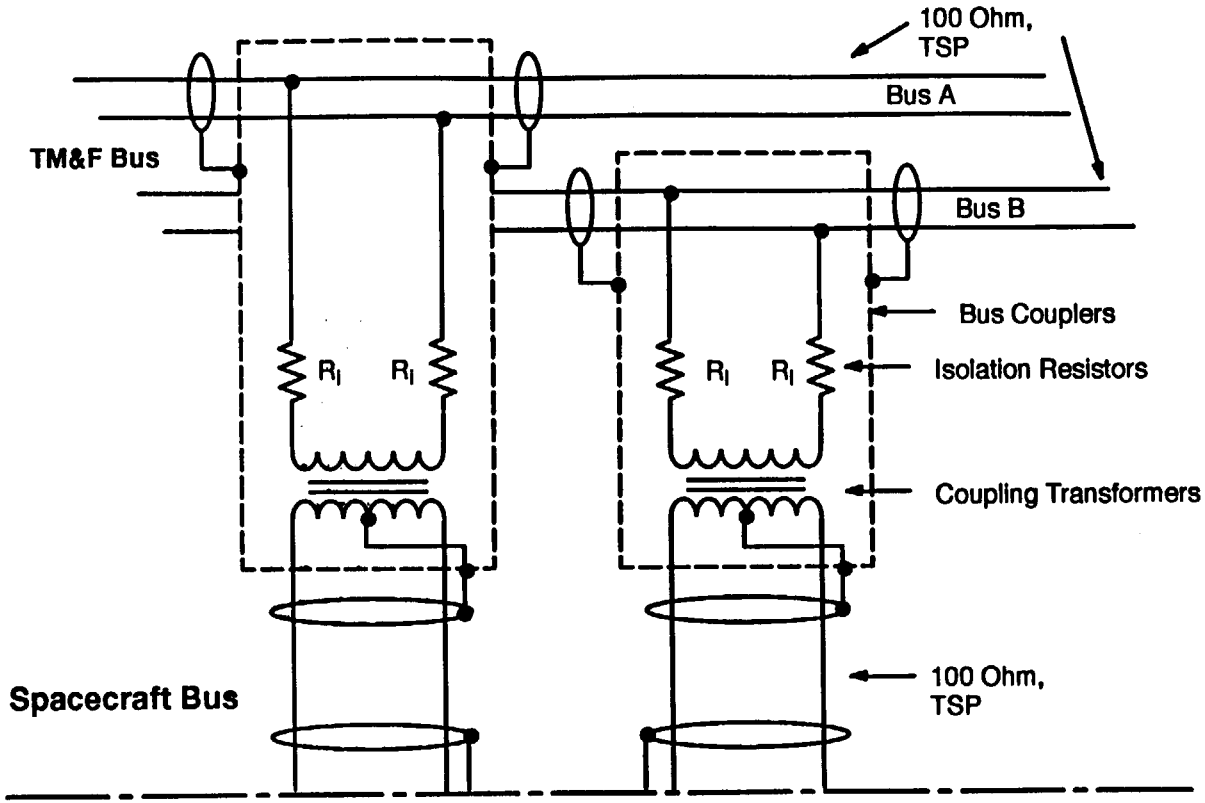

Instrument TBD 019

Notes:

TSP Twisted shielded pair

1. Cable characteristic impedance (Z0) = 100 ohms
2. Proposed cable type = GORE CXN2702

Figure 7. Time Mark and Frequency Bus Interface Circuit

(TBD 020)

Figure 8. Science Data Interface Circuit

Size	Code Ident No.		
A	49671	20008825	
			Sheet 47

(TBD 021)

Figure 9. BDU Relay Drive Command Interface Circuit(s)

Size	Code Ident No.		
A	49671	20008825	Sheet 48

(TBD 022)

Figure 10. BDU Passive Bi–Level Telemetry Interface Circuit(s)

Size	Code Ident No.		
A	49671	20008825	
			Sheet 49

(TBD 023)

Figure 11. BDU Passive Analog Telemetry Interface Circuit(s)

Size	Code Ident No.		
A	49671	20008825	Sheet 50

(TBD 024)

Figure 12. Command and Telemetry Bus Timing Diagram

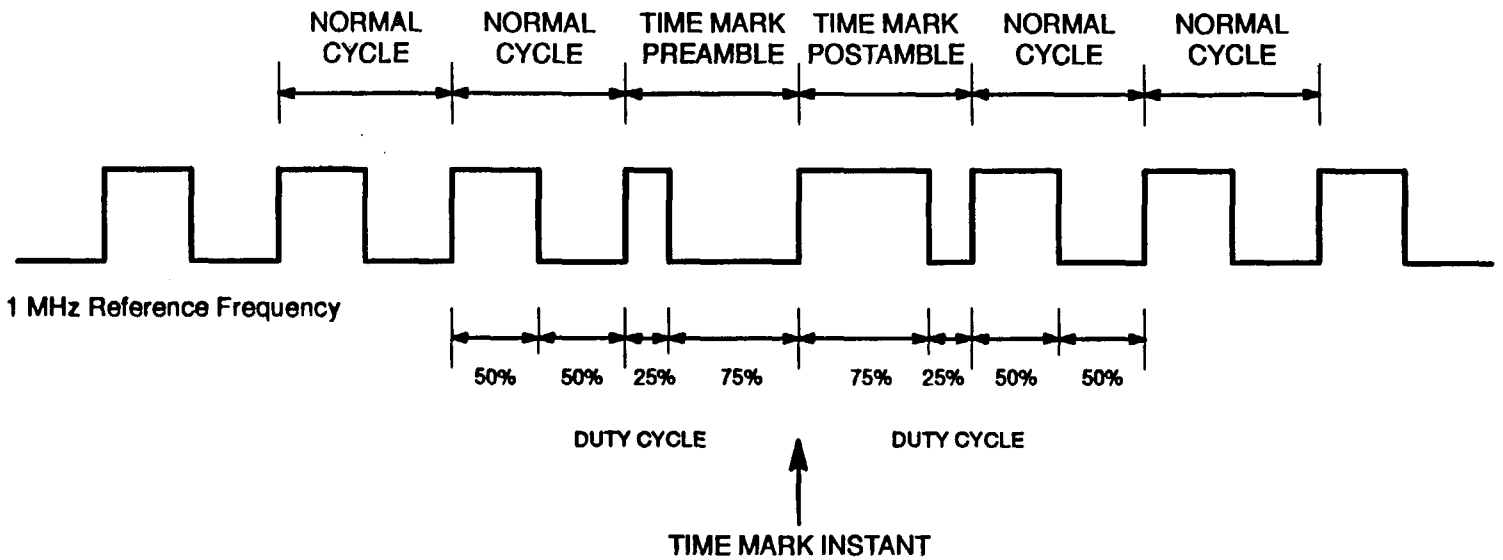

Figure 13. Time Mark and Frequency Bus Timing Diagram

(TBD 025)

Figure 14. Science Data Timing Diagram

(TBD 026)

Figure 15. BDU Relay Drive Command Timing Diagram(s)

(TBD 027)

Figure 16. BDU Passive Bi–Level Telemetry Timing Diagram(s)

(TBD 028)

Figure 17. BDU Passive Analog Telemetry Timing Diagram(s)

2 POWER

1. The instrument power consumption (by mode) is shown in Table NO TAG and details in Figures 18 and 19.

2. Turn–on, turn–off, and significant mode switching transients are shown in Figures 20 through 22.

3. Each power feed side is fused as shown in Figure 5. Test points for fuse verification are located on [pin **#(TBD 029)**, connector **#(TBD 029)**] of the [power distribution box **(TBD 029)**].

Table IV. Power Consumption

Mode #	Mode	Power (Watts) Average	Power (Watts) Peak	Time (Minutes)	Use
0	Launch	0	0	–	Once
1	Survival	21.43	29.05	–	As required
2	Safe (See Note 1.)	21.43	29.05	–	As required
3	Standby	36.01	36.01	–	As required
4	Biaxial (See Note 2.)	42.61	81.61	100	Continuous
5	Cross–Track (See Note 2.)	38.31	57.31	100	Continuous
6	Biaxial Scan/Internal Calib. See Note 2.)	46.83	89.0	40	Once/2 weeks
	Biaxial Operation 1–orbit average power 0% estimated 100% calculated 0% actual	42.61	81.61	N/A	
	Cross–Track Operation 1–orbit average power 0% estimated 100% calculated 0% actual	38.31	57.31	N/A	
	Biaxial Operation 2–orbit average power 0% estimated 100% calculated 0% actual	42.61	81.61	N/A	
	Cross–Track Operation 2–orbit average power 0% estimated 100% calculated 0% actual	38.31	57.31	N/A	

Notes:

1. Safe mode values are for worst case sun–pointing safe mode.
2. Peak scan mode loads and loads due to internal calibration are detailed in Figures 18 and 19.
3. Power by mode as of 30 June 1993.
   Orbit average power as of 30 June 1993.

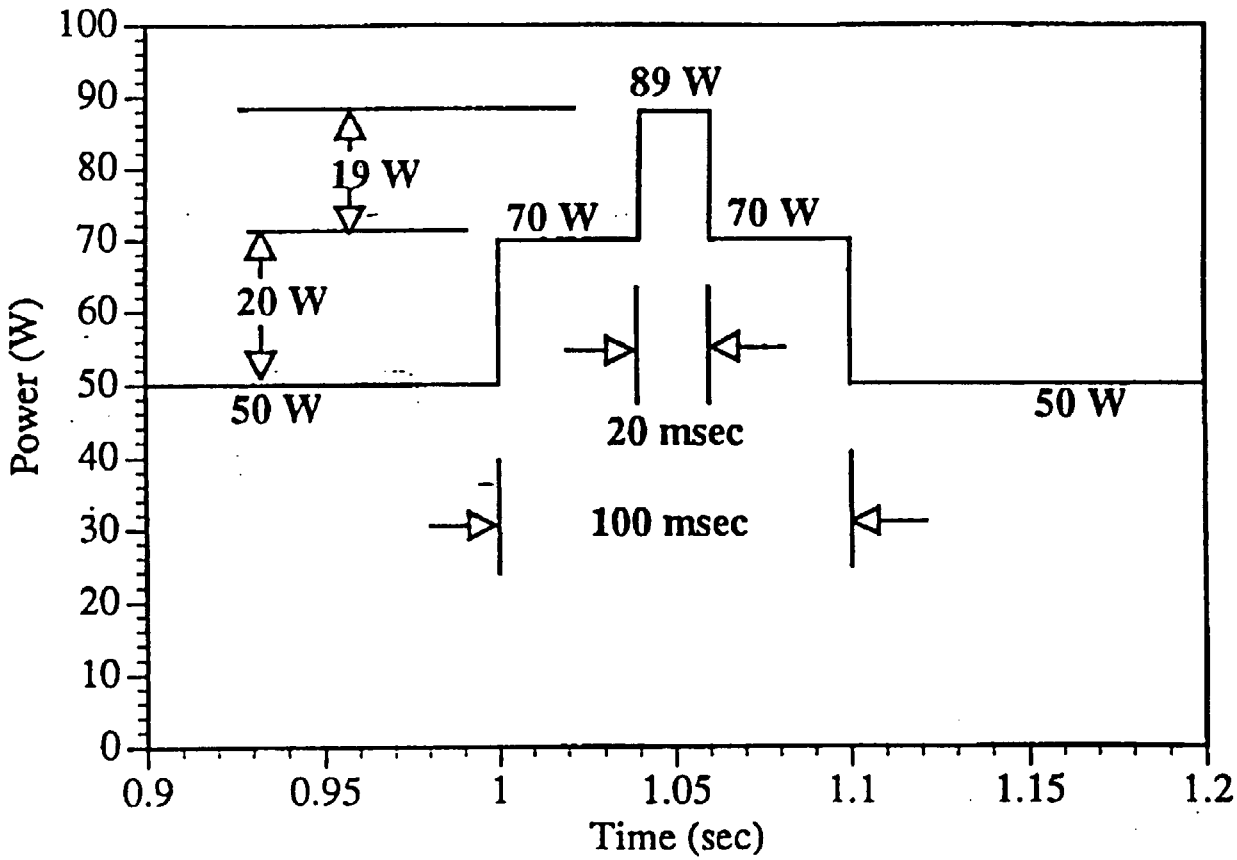

Figure 18. Worst Case Biaxial Mode Power Peak

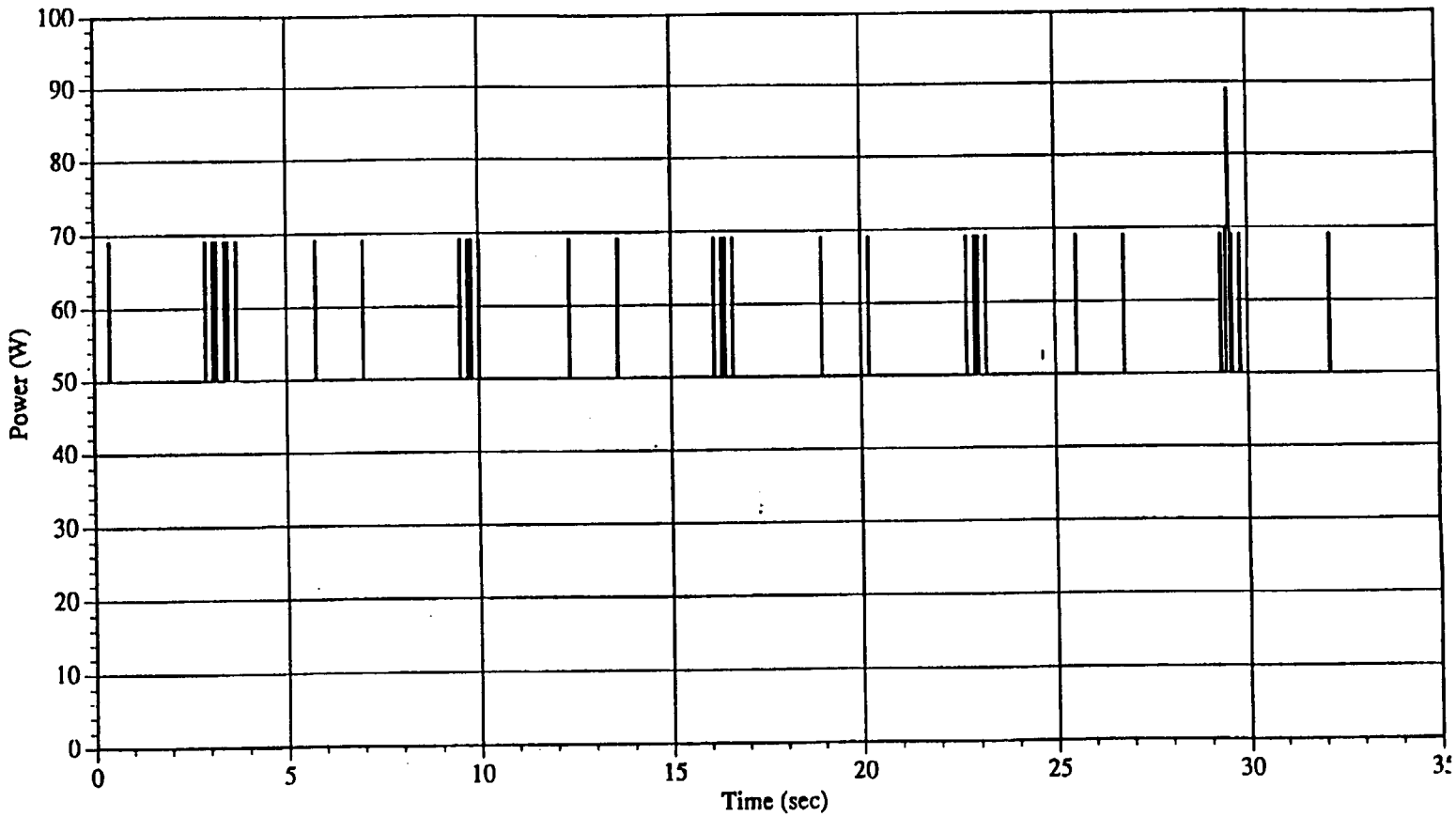

Figure 19. Worst Case Biaxial Mode Power Profile

(TBD 030)

Figure 20. Turn–On Transient

Size	Code Ident No.		
A	49671	20008825	
			Sheet 61

(TBD 031)

Figure 21. Turn–Off Transient

Size	Code Ident No.		
A	49671	20008825	Sheet 62

(TBD 032)

Figure 22. [Mode] Switch Transient

3 ELECTROMAGNETIC COMPATIBILITY

1. The instrument conducted and radiated emissions sources are shown in Table V.

2. The instrument conducted and radiated susceptibilities are shown in Table VI.

3. The instrument magnetic properties are shown in Table VII.

4. The instrument magnetic susceptibilities are shown in Table VIII.

5. The results of the instrument conducted and radiated emissions tests are shown in Figures 23 through 26.

6. The results of the instrument conducted and radiated susceptibility tests are shown in Figures 27 through 31.

7. The results of the instrument magnetic properties tests are shown in Figure 32.

Table V. Emissions (TBD 033)

Source	Location	Frequency (Hz)	Emission Range

Table VI. Susceptibility (TBD 034)

Item	Location	Frequency (Hz)	Susceptibility Range

Table VII. Magnetic Properties (TBD 035)

Magnetic Fields		Dipole Moment (Am^2)
Intensity (μT)	Direction	

Table VIII. Magnetic Susceptibility (TBD 036)

Item	Susceptibility

Notes:

A Ampere
Hz Hertz
m Meter
T Tesla

Size	Code Ident No.	
A	49671	20008825
		Sheet 65

(TBD 037)

Figure 23. Conducted Emissions Test Data – Power Leads (CE01)

(TBD 038)

Figure 24. Conducted Emissions Test Data – Power Leads (CE03)

(TBD 039)

Figure 25. Radiated Emissions Test Data – Electric Field (RE02)

(TBD 040)

Figure 26. Radiated Emissions Test Data – Magnetic Field (RE04)

(TBD 041)

Figure 27. Conducted Susceptibility Test Data – Power Leads (CS01)

(TBD 042)

Figure 28. Conducted Susceptibility Test Data – Power Leads (CS02)

(TBD 043)

Figure 29. Conducted Susceptibility Test Data – Power Leads (CS06)

(TBD 044)

Figure 30. Radiated Susceptibility Test Data – Magnetic Field (RS01)

(TBD 045)

Figure 31. Radiated Susceptibility Test Data – Electric Field (RS03)

(TBD 046)

Figure 32. Magnetic Properties Test Data

Table IX. Reference Documents*

Document Number	Date	Document Title	Source

* Table information will be filled in as required.

20043114
CAGE No. 49671
26 August 1993

(PRELIMINARY)

EOS-AM Spacecraft

MULTI-ANGLE IMAGING SPECTRO-RADIOMETER (MISR)

INSTRUMENT FLIGHT OPERATIONS UNDERSTANDING

Prepared Under:
Contract No. NAS5-32500
NASA Goddard Space Flight Center
Greenbelt, Maryland 20771

Prepared by:
Martin Marietta
Astro-Space
P. O. Box 800
Princeton, New Jersey 08543-0800

REVISION LOG

This log identifies those portions of this document which have been revised since original issue.

Revision	Paragraph Number(s) Affected	Rev. Date	Approval
Draft	All	02 March 1993	N/A
Preliminary	All	26 August 1993	N/A

TABLE OF CONTENTS

SECTION/ PARAGRAPH	TITLE	PAGE
1	INTRODUCTION	1
1.1	Purpose	1
1.2	Scope	1
2	DOCUMENTATION	2
2.1	Applicable Documents	2
2.2	Information Documents	2
3	INSTRUMENT DEFINITION	3
3.1	Basic Description	3
3.2	Instrument Operations	3
3.2.1	Operating Modes	5
3.2.1.1	Science Modes	8
3.2.1.2	Other Modes (Non-Science Data Acquisition)	11
3.2.2	Microprocessor Operation	13
3.2.3	Instrument Commands	13
3.2.4	Instrument Telemetry	13
3.2.4.1	Science Data	13
3.2.4.2	Engineering Data	14
3.2.4.3	Housekeeping Data	14
3.2.4.4	Critical Health & Safety Data	14
3.2.5	Bus Data Unit	15
3.2.6	Operating Constraints	15
3.2.6.1	Categories of Constraint/Restraints	15
3.2.6.2	MISR Operating Constraints	16
3.2.7	Activation	16
4	OPERATIONAL SYSTEM DEFINITION	17
4.1	Spacecraft Bus	17
4.1.1	Command and Telemetry Systems	19
4.1.2	Spacecraft Controls Computer	21
4.1.2.1	Spacecraft Controls Computer Description	21
4.1.2.2	Spacecraft Controls Computer Operation	24
4.1.3	Command and Telemetry Interface Unit	28
4.1.4	Science Formatting Equipment	32
4.1.5	Solid State Recorder	35
4.1.6	Bus Data Unit	42
4.1.7	Initial Spacecraft Operation	42
4.1.8	Spacecraft Maneuver Operations	43
4.1.9	Autonomous Operations	44
4.1.10	Spacecraft Bus Operating Modes	44
4.1.11	Spacecraft Bus - Instrument Operating Modes Relationships	50

TABLE OF CONTENTS (continued)

SECTION/ PARAGRAPH	TITLE	PAGE
4.2	Ground System	52
4.2.1	Space Network	52
4.2.2	FDF	54
4.2.3	NASCOM	55
4.2.4	Science Support Networks	55
4.2.5	Alternate Space/Ground Links	56
4.2.6	EOSDIS	56
4.2.6.1	EDOS	56
4.2.6.2	ECOM	57
4.2.6.3	ECS	57
4.2.6.3.1	FOS	58
4.2.6.3.2	SDPS	61
4.2.6.3.3	CSMS	62
5	FUNCTIONAL RESPONSIBILITY ALLOCATIONS	63
5.1	Planning and Scheduling	63
5.1.1	Long Term Planning	64
5.1.2	Initial Scheduling	65
5.1.3	Daily Planning and Scheduling	66
5.1.4	Planning Aids	66
5.2	Uplink Generation	66
5.3	Real-Time Operations	67
5.4	Performance Verification	68
5.5	Database and Software Maintenance	69
5.6	Early Orbit Operations	70
5.6.1	Launch - Orbit Acquisition Mission Phases	70
5.6.2	Activation	75
5.6.3	Transition to Orbital Operations	76
5.7	Spacecraft Maneuvers	77
5.8	Special Observations	77
5.9	Contingencies	77
6	INTERFACE EXCHANGE ITEMS	80
6.1	Planning and Scheduling	80
6.2	Command Generation	81
6.3	Real Time Operations	81
6.4	Analysis	82
6.5	Operations Database	83
6.6	Other Interface Exchange Items	83

TABLE OF CONTENTS (continued)

SECTION/ PARAGRAPH	TITLE	PAGE
7	JOINT OPERATING PROCEDURES	84
7.1	PI/EOC FOT Interface	84
7.1.1	Daily Operations Planning	84
7.1.2	Command Generation	85
7.1.3	Special Operations	85
7.1.4	EOC Database	85
7.1.5	Microprocessor Load Verification	85
7.2	PI/EOC Command Management Interface	86
7.2.1	Operations Plans	86
7.2.2	Planning Aids	86
7.2.3	Command Generation	86
7.2.4	Performance Feedback	86
7.3	PI/FOT Interface	86
7.3.1	Real Time Operations	87
7.3.2	Special Operations	87
7.3.3	Initial Operations	87
7.3.4	Performance Verification	87
7.4	PI/DAAC Interface	87
7.5	PI/ Access to Telemetry	88
8	IMPLEMENTATION AGREEMENTS	89
8.1	Flight Operations Database	89
8.1.1	Commands	89
8.1.2	Instrument Telemetry	89
8.1.3	Instrument Limits	89
8.1.4	Database Approval	90
8.2	Operational Displays	90
8.3	Operations Procedures	90
8.3.1	EOC Definition	90
8.3.2	I&T Procedures to EOC Operations Procedures Conversion	90
8.3.3	I&T Databases to EOC Operations Databases Conversion	91
8.3.4	Flight Unique Procedures	91
8.3.5	Procedure Submittal	91
8.3.6	Approved EOC Procedures	91
8.3.7	Procedure Verification	91
8.4	Narrative Procedures	91
8.4.1	Standard Operating Procedures	92
8.4.2	Contingency Operating Procedures	92

TABLE OF CONTENTS (continued)

SECTION/ PARAGRAPH | TITLE | PAGE

APPENDIX I

10 SPACECRAFT CONTROLS COMPUTER INSTRUMENT REQUIREMENTS 93
10.1 Stored Command Requirements 93
10.1.1 Absolute Time Commands 93
10.1.2 Relative Time Command Sequences 93
10.2 Telemetry Monitor Requirements 93

APPENDIX II

20 INSTRUMENT COMMAND PROCESSING REQUIREMENT 94
20.1 Activity Planning Requirements 94
20.1.1 Activity Definition 94
20.1.2 Event Definition 94
20.1.3 Activity Scheduling 94
20.2 Constraint Check Requirements 94
20.2.1 Command Level 94
20.2.2 Activity Level 94
20.2.3 Schedule Conflicts 95
20.3 Real-Time Command Requirements 95
20.3.1 Utilization Plans 95
20.3.2 Command Generation Capabilities 95
20.3.3 Transmission Requirements 95

TABLE OF CONTENTS (continued)

SECTION/ PARAGRAPH	TITLE	PAGE
20.4	Microprocessor Load Handling Requirements	95
20.4.1	Uplink Message Structures	95
20.4.2	Transmission Requirements	96
20.5	Command Database Requirements	96
20.5.1	Command Definition	96
20.5.2	Unique Command Structures	96
20.5.3	Activity Definitions (EOC Command Management)	96
20.5.4	Stored Command Sequences (EOC Command Management)	96
20.5.5	Real-Time Command Sequences (EOC)	96
20.5.6	Utilization Constraints	96

APPENDIX III

30	TELEMETRY PROCESSING REQUIREMENTS	97
30.1	Decommutation Requirements	97
30.1.1	Engineering Telemetry Format	98
30.1.2	Science Telemetry Format	104
30.1.2.1	MISR CCD Data	104
30.1.2.2	Calibration Diode Data	107
30.1.5	Test Packet Format	111
30.4	Uplink Verification Requirements	112
30.4.1	Command Verification	112
30.4.2	Microprocessor Load Verification	112
30.5	Health and Safety Monitoring Requirements	112
30.5.1	Limit-Check Requirements	112
30.5.2	Alarm Requirements	112
30.6	Display Generation Requirements	113
30.6.1	Parameter Calibration	113
30.6.2	CRT Page Display	113
30.6.3	Strip-Chart Recorder Displays	113
30.6.4	Hardcopy Outputs	113

TABLE OF CONTENTS (continued)

SECTION/ PARAGRAPH	TITLE	PAGE
30.7	EOC Telemetry Database Requirements	113
30.7.1	Telemetry Function Definition	113
30.7.2	Derived Function Definition	113
30.7.3	Mode/Event Definition	114
30.7.4	Limit Check Thresholds	114
30.7.5	Alarm Generation Criteria	114
30.7.6	Command Verification Criteria	114
30.7.7	Display Definition	114
30.7.8	Calibration Parameters	114

APPENDIX IV

40	INSTRUMENT OPERATIONAL ACTION REQUIREMENTS	115
40.1	Contingency Action Requirements	115
40.1.1	Emergency Power-Down	115
40.1.2	Limits/Alarm Reaction	115
40.1.3	Spacecraft Safe hold (SCC running)	115
40.1.4	SCC Halted	115
40.1.5	Other On-board Computers Halted	115
40.1.6	Uplink Transmission Failure	115
40.2	Preactivation Requirements	115
40.3	Spacecraft Maneuver Accommodation	116
40.3.1	Orbit Adjust	116
40.4	Alignment/Calibration Requirements	116
40.5	Special Observation Requirements	116

APPENDIX V

50	PLANNING AID REQUIREMENTS	117
50.1	Parameter Definition	117
50.1.1	Long Term	117
50.1.2	Short Term	118
50.2	Parameter Specifications	118
50.2.1	Information Accuracy	118
50.2.2	Data Precision	118
50.2.3	Data Frequency	119
50.3	Information Handling Requirements	119
50.3.1	Format	119
50.3.2	Packaging	119

TABLE OF CONTENTS (continued)

SECTION/ PARAGRAPH	TITLE	PAGE
50.4	Access Timeline Requirements	119
50.4.1	Lead Time	119
50.4.2	Retention	119

APPENDIX VI

60	**SPECIAL ACTIVATION REQUIREMENT**	**120**
60.1	Commanding Requirements	120
60.1.1	Special Command Sequences	120
60.1.2	Special Command Constraints	120
60.1.3	Real-time Command Generation	120
60.1.4	Special Command Transmission Requirements	120
60.2	Telemetry Processing Requirements	120
60.2.1	Special Telemetry Formats	120
60.2.2	Special Processing Functions	121
60.2.3	Special Processing Parameters	121
60.2.4	Special Displays	121
60.2.5	Strip Chart Recorder	121
60.3	Remote Support Coordination Requirements	121
60.3.1	Quick-look Playback Handling	121
60.3.2	Voice Communications	121
60.4	Facility Requirements	121

APPENDIX VII

70	**ABBREVIATIONS**	**122**

LIST OF FIGURES

FIGURE	TITLE	PAGE
1	MISR Nominal Operational Timeline	4
2	MISR Modes Transitions	12
3	EOS-AM Spacecraft Mission Phases	18
4	Uplink Paths	19
5	Downlink Paths	20
6	Absolute Time Stored Command Structure	24
7	Absolute Time Stored Command Operation	25
8	Relative Time Command Sequence Structure	26
9	Relative Time Command Sequence Operation	27
10	CTIU Command Processing Flow	29
11	CTIU Telemetry Processing Flow	30
12	SFE Interface Block Diagram	34
13	SSR Basic Configuration	35
14	SSR Science Data Buffer Utilization	37
15	SSR Typical Operating Scenario	38
16	SSR Operation Profile	41
17	Typical Operational Initialization Phase Activities Timeline	42

LIST OF FIGURES (continued)

FIGURE	TITLE	PAGE
18	Orbit Maintenance Scenario	43
19	Spacecraft Operating Modes Availability	45
20	Top Level Space Network Scheduling Process	53
21	EOC / Space Network Scheduling Timeline	54
22	EOC Staffing Structure	58
23	MISR IST User Perspective	60
24	Launch / Ascent Phase Timeline	72
25	Orbit Acquisition Mission Phase Timeline	74
26	DELTA-V Activity Flow	75
27	PI Facility / EOC FOT Interface	84

LIST OF TABLES

TABLE	TITLE	PAGE
I	MISR Operating Modes	5
II	MISR Mode Configuration	6
III	Global Mode Camera Configuration	8
IV	Proposed SSR Buffer Sizing	36
V	Spacecraft Bus and MISR Operating Modes	51
VI	Command List	96
VII	Telemetry List	97
VIII	CCSDS Engineering Packet Proposed Structure (top level)	98
IX	Proposed Engineering Data Packet Detailed Structure	99
X	Science Data Packet Top Level Structure	104
XI	Detailed Science Data Packet Structure	105
XII	Average Length of MISR CCD Data Packets	106
XIII	Calibration Diode Data Top Level Structure	107
XIV	Calibration Diode Data Detailed Packet Structure	108

TO BE DETERMINED (TBD) LIST

TBD	SEC. / PAGE	DESCRIPTION	RESPONSIBLE	DUE

This list will be added with the final update

TO BE REVIEWED (TBR) LIST

TBR	SEC. / PAGE	DESCRIPTION	RESPONSIBLE	DUE

This list will be added with the final update.

TO BE SUPPLIED (TBS) LIST

TBS	SEC. / PAGE	DESCRIPTION	RESPONSIBLE	DUE

This list will be added with the final update.

(This page intentionally left blank.)

1 INTRODUCTION

This Instrument Flight Operations Understanding (IFOU) is a statement of the EOS-AM community's understanding regarding the Multi-angle Imaging Spectro-Radiometer (MISR) flight operations plans and requirements.

This Instrument Flight Operations Understanding will be updated periodically as requirements evolve and are further defined. Inputs are welcomed from the Instrument Team, Flight Operations Team, EOS Ground Systems, NASA Institutional Facilities, and the EOS-AM Project entities.

1.1 Purpose

This IFOU will be used by the Flight Operations Team (FOT) and EOS Operations Center (EOC) support personnel in defining prelaunch preparation efforts and in verifying operational readiness prior to launch. Requirements for specific types of operational support will be defined and implemented consistent with this IFOU. This IFOU will be used to ensure that instrument needs are properly reflected in other documentation.

1.2 Scope

This document describes the EOS-AM Spacecraft MISR operations on-orbit and instrument flight operations support. The focus is from the Flight Operations Team's perspective.

Interactivity with ground systems control and interconnectivity to the EOS ground systems segment are described. Institutional interfaces between Spacecraft, applicable ground systems and the end-user are included. The flight operations scheduling, planning, and operations philosophy are included. Aspects of the Earth Observing System Data and Information System (EOSDIS), as well as the external systems/facilities with which the Spacecraft flight operations elements interface, are only addressed as required to clarify these concepts.

The understandings stated herein are explicitly subordinate to interfaces between MISR and the EOS-AM Spacecraft, as defined in the most recent issue of the documents listed in Section 2.

This document does not take precedence over any of the requirements, specifications, documents or interfaces associated with the Spacecraft or affiliated ground systems.

2 DOCUMENTATION

2.1 Applicable Documents

The concept and content of this document are consistent with the documents listed below:

(GSFC) - 421-10-01 30 Oct. 1992	Requirements Document for the EOS-AM Spacecraft
(GSFC) - 420-03-02 01 Dec. 1992	General Instrument Interface Specification
20005396 (SEP-101) 15 May 1992	EOS-AM Spacecraft Contract End Item Specification
(GSFC) - 421-12-03-02 15 Jan. 1993	Unique Instrument Interface Document for MISR
(GSFC) - 420-05-02 13 Nov. 1992	Performance Assurance Requirements for the EOS-AM Observatories
20008830 15 Jan. 1993	MISR Interface Control Document (ICD)

2.2 Information Documents

The following documents amplify or clarify the information presented in this document.

20008529 (OPD-110) 18 May 1992	EOS-AM Spacecraft Operations Requirements
EOS-DN-SE&I-010 15 May 1992	EOS Baseline Description Document (BDD)
EOS-DN-SE&I-031 23 Apr. 1992	Command and Telemetry Requirements Analysis
EOS-DN-C&DH-032 15 Dec. 1991	Command and Telemetry Concept Definition
GSFC-510-30CD/0191 26 Oct. 1992	Earth Observing System Data and Information System (EOSDIS) Flight Operations Segment (FOS) Operations Concept (Revision 3)
20008502 (UID-101) 04 Sept. 1992	General Instrument Interface Handbook

3 INSTRUMENT DEFINITION

The understandings regarding MISR are as follows:

3.1 Basic Description

MISR data will be used in the studies of the ecology and climate of the Earth. Global observations of the directional characteristics of reflected light are made to gather information for studying atmospheric aerosols, cloud fields, and land surface characteristics. MISR provides aerosol data required to validate the Moderate Resolution Imaging Spectrometer (MODIS) data and correct MODIS images for atmospheric effects. It also provides data used in MODIS land studies.

MISR is a "push broom" imager with nine charged couple device-based cameras set at fixed angles. Four cameras look forward, one camera looks nadir, and four cameras look aft along the EOS ground path. Images are acquired, by each camera, in four spectral bands with band centers at 443 (blue), 555 (green), 670 (red), and 865 (near infra-red) nm wavelengths. The spatial sampling is 275 m x 275 m for off nadir and 250 m x 275 m for nadir observations with no on-board averaging. The data are averageable within the instrument 2 x 2 (550 m x 550 m), 4x4 (1.1 km x1.1 km), and 4 x 1 (1.1 km x 275 m) in each channel (36 total) independently. The data cover a 360 km swath yielding a 9-day coverage at the equator, and 2-day coverage at 80 deg. latitude. A particular allocation of averaging modes among channels is called a "camera configuration".

MISR contains a microprocessor in the MISR flight computer. This computer contains ROM and RAM and performs start up and built in test routines upon power application. Default instrument operating characteristics are stored in ROM, with operating mode command sequences uplinked at regular intervals to select locations and lengths of Local Mode targeted observations, and to choose pixel locations for swath editing. During Local Mode, all averaging is sequentially inhibited in each of the nine cameras, beginning with the most forward-looking camera, and cycling through the others. This provides 36 channel high resolution data over selected 360 x 300 km targets.

3.2 Instrument Operations

MISR, primarily a survey instrument, operates continuously. Instrument activities are preplanned and scheduled. MISR flight computer commands necessary to carry out the mission objectives are contained in tables covering a 16 day cycle, which are uplinked on a TBD schedule. The instrument commands are loaded by the EOS Operations Center (EOC) during EOS-AM/TDRSS contact periods. During a nominal 24 hour period, the instrument cycles between the data acquisition modes and the Dark mode each orbit, as depicted in Figure 1. For each orbit, the beginning

orbit boundary is assumed to be the dark side equator crossing. This enables all data within a swath, including calibrations, to be planned, commanded, acquired, and archived as a unit.

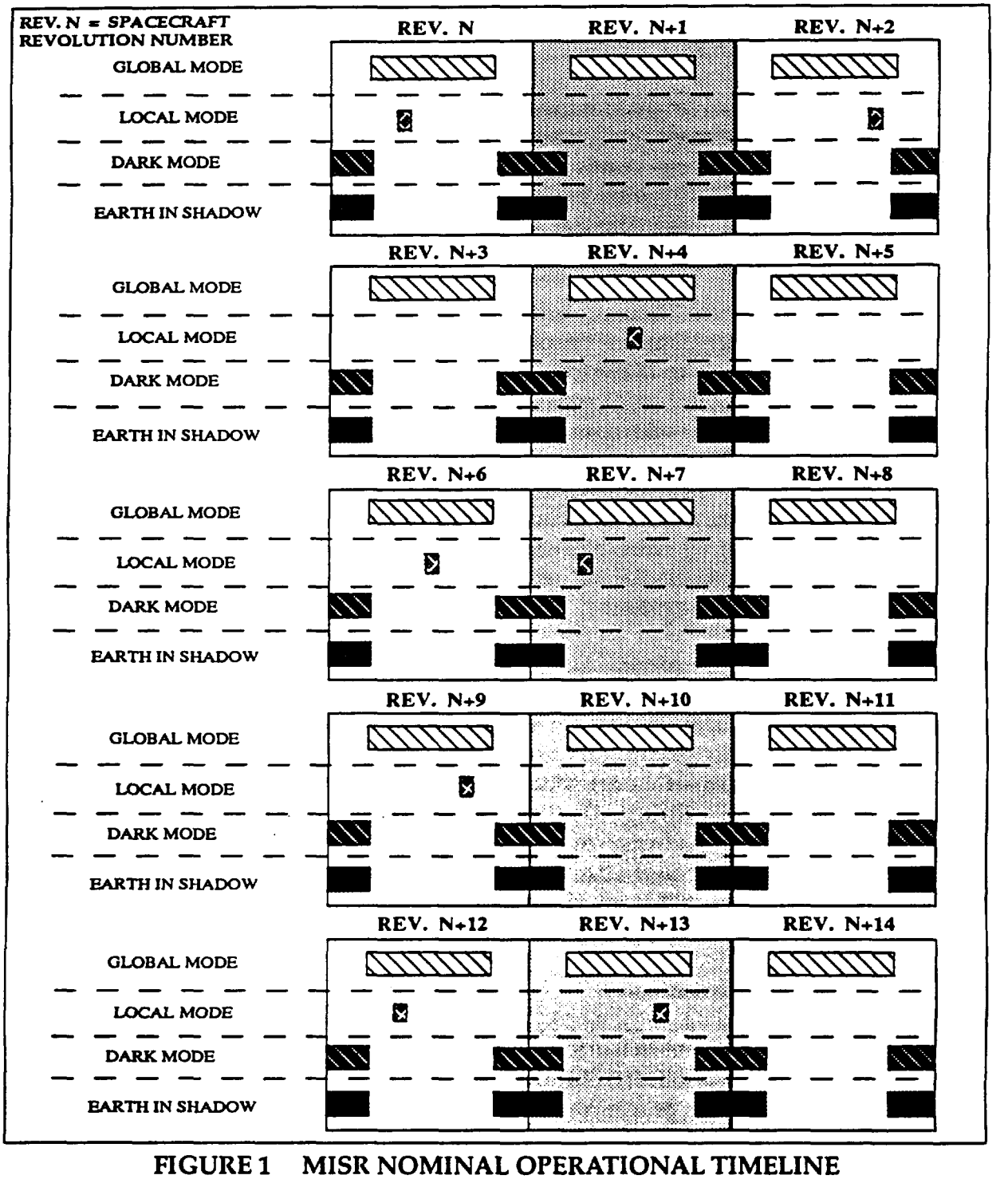

FIGURE 1 MISR NOMINAL OPERATIONAL TIMELINE

3.2.1 Operating Modes

Table I. identifies the MISR Operating modes and corresponding data rates. The first four are all within the Spacecraft Science Mode. They are not individually commanded by the Spacecraft. The remaining modes are in a one-to-one relationship to Spacecraft Modes, and may be commanded individually by the Spacecraft or ground.

TABLE I MISR OPERATING MODES

OPERATING MODE	DATA RATE (Mbps)	COMMENTS
Global	5.7 to 16	Nominal daylight mode
Local	6.8 (1 camera) 8.0 (2 cameras)	Cycled, sequential camera operation Provides highest resolution - all cameras
Calibration	2.5	Calibrations occur near the poles (~ 7 min. durations each)
Dark	.004	Standard darkside mode All focal planes turned off
Standby	0 *	C & DH operational
Safe	0 *	Instrument configured to a pre-defined state
Survival	0	Instrument powered down
Test	TBD	TBD
OFF	0	All subsystems are un-powered

* Telemetry consists of housekeeping and critical health and safety on the 1553 bus only.

The MISR modes are described in the following paragraphs. Table II. summarizes the MISR mode configurations with respect to the spacecraft (TBR), including resources (TBR), initiation (TBR), and MISR instrument subsystem configuration.

TABLE II MISR MODE CONFIGURATIONS

Mode	Initiator	Entry From	Exit To	Spacecraft Resources Provided	MISR Subsystem Configuration
OFF	Spacecraft	Safe Standby Survival Science	Standby	None	All subsystems are un-powered Mechanisms: •Cover is closed •CPanels Stowed •Goniometer at nadir
Standby	Spacecraft	Off Safe Survival Science	Off Safe Survival Science	TBR	C&DH: Operational except High Rate Science Link Camera Elec: Operational Analog Elec: Operational Mechanisms: •Cover is open •CPanels Stowed •Goniometer at nadir
Safe	Spacecraft	Standby Survival Science	Off Standby Survival Science	TBR	C&DH: Operational except High Rate Science Link Camera Elec: Operational Analog Elec: Operational Mechanisms: •Cover is closed •CPanels Stowed •Goniometer at nadir
Survival	Spacecraft	Off Safe Science Standby	Off Safe Science Standby	Survival Power TBR	Survival Heaters Only Instrument monitored through • Pt.- to - Pt. telemetry only Mechanisms: Stowed / at nadir and cover closed

For this illustration, Science (Entry & Exit) includes: Global, Local, Calibration, Dark
Cpanels = Calibration Panels

TABLE II (continued) MISR MODE CONFIGURATIONS

Mode	Initiator	Entry From	Exit To	Spacecraft Resources Provided	MISR Subsystem Configuration
Global	MISR	Local Dark Calibration	Local Dark Calibration	TBR	C&DH: Operational Camera Elec: Operational Analog Elec: Operational Mechanisms: •Cover is open •CPanels Stowed •Goniometer at nadir
Local	MISR	Global Dark Calibration	Global Dark Calibration	TBR	C&DH: Operational Camera Elec: Operational - toggle Analog Elec: Operational Mechanisms: •Cover is open •CPanels Stowed •Goniometer at nadir
Dark	MISR	Global Local Calibration	Global Local Calibration	TBR	C&DH: Operational Camera Elec: Off Analog Elec: Operational (low power) Mechanisms: •Cover is open •CPanels Stowed •Goniometer at nadir
Calibration	MISR	Global Local Dark	Global Local Dark	TBR	C&DH: Operational Camera Elec: 5 Operational 4 Off Analog Elec: Operational Mechanisms: •Cover is open •CPanels deployed (1) •Goniometer deployed
Test	Spacecraft	TBD	TBD	TBD	TBD

For this illustration, Science (Entry & Exit) includes: Global, Local, Calibration, Dark
Cpanels = Calibration Panels

3.2.1.1 Science Modes

a. Global Mode -- Global Mode is used for continuous operation in a single data averaging camera configuration, with constant data rate and power consumption, consistent with spacecraft constraints. The MISR PI has chosen a standard camera configuration baseline (nicknamed "Super Stereo") with most channels averaged 4x4, as follows (Table III):

TABLE III
GLOBAL MODE "SUPER STEREO" STANDARD CAMERA CONFIGURATION

Band/Cam	Df	Cf	Bf	Af	An	Aa	Ba	Ca	Da
Blue	4x4	4x4	4x4	4x4	1x1	4x4	4x4	4x4	4x4
Green	4x4	4x4	4x4	4x4	1x1	4x4	4x4	4x4	4x4
Red	1x1	1x1	1x1	1x1	1x1	1x1	1x1	1x1	1x1
Near-IR	4x4	4x4	4x4	4x4	1x1	4x4	4x4	4x4	4x4

The Global Mode camera configuration may change after launch. High resolution (no averaging), is required for cloud screening and classification (requires multiple bands and multiple viewing angles), stereoscopic surface topography and cloud heights, and ground location determination.

b. Local Mode -- Local mode employs cycled, sequential camera operation (i.e. "toggling") to provide targeted observation in the highest resolution available (i.e. unaveraged data) in all channels. The Local Mode can accommodate toggling of more than one camera at a time to allow for high resolution observation of multiple nearby Local Mode targets. Local Mode results in stepwise changes in data rate beyond the Global Mode values, but are within MISR allocations.

A typical Local Mode isolated target observation scenario is as follows:

Each camera, starting with the most forward viewing and progressing to the back, is switched from the Global Mode to the Local Mode (i.e. turn off data averaging) as the scene area comes into view. Each camera is switched back to the Global Mode when its field of view leaves the scene area. Local Mode site selections are used to provide data at higher resolution than available in Global Mode. Purposes of the Local Mode site selections are: the determination of spatial resolution effect on data products; provision of data for specialized algorithm development; field validation, calibration, and cross-calibration between instruments; bi-directional land surface reflectances.

c. Calibration Mode -- MISR calibration utilizes a deployed calibration panel to present a uniform, near lambertian target. Panel spatial and angular reflectance properties are monitored with the use of 8 stationary photodiode packages, and one mounted to a swinging goniometer arm to scan at multiple view angles. Calibration is done near the poles before or after MISR data taking on the daylight side. No interruption of the science data occurs since the Earth in the MISR field of view is not sunlit. Five of the cameras are calibrated at one time. The 4 aft-viewing and the nadir cameras are calibrated near the North pole. The 4 forward viewing and the nadir camera are calibrated near the South Pole. The calibration sequence takes approximately 7 minutes; during data-taking, each channel is toggled between the different averaging data modes.

Calibration times/schedules and command sequences will be developed and included with the PI's instrument activity schedule provided to the EOC for inclusion with scheduled Spacecraft command loads. The calibration frequency is currently baselined at twice per day during the first day, once again during the first week, twice again in the first month, and once per month after the first month, with the two calibration sequences occurring on the same orbit. The calibration sequence of activities is as follows:

	North Pole	South Pole
1.	Da, Ca, Ba, Aa, An ON	Df, Cf, Bf, Af, An ON
2.	Photodiodes ON	Photodiodes ON
3.	Collect Dark Data (Darkside of Earth)	
4.	Photodiodes OFF	
5.	Cameras OFF	

Calibration sequence of activities continued:

	North Pole	South Pole
6.	Deploy North Pole diffuse panel	
7.	Cameras ON (Da, Ca, Ba, Aa, An)	
8.	Photodiodes ON	
9.	Collect Night Calibration data (No Sun illumination of panel)	
10.	Collect Sunrise data (Sun seen through the Earth's atmosphere)	
11.	Goniometer ON (Continue collecting Sunrise data)	
12.	Collect Clear Atmosphere Data (Direct Sun illumination of the panel)	
13	Goniometer OFF	
14	Photodiodes OFF	Photodiodes OFF
15	Cameras powered off in order	Stow diffuse panel
16.	Stow diffuse panel	Cameras powered off in order

d. Dark Mode -- The Dark Mode is the standard mode used over the dark side of the Earth. The focal planes (cameras) are turned off while MISR is in the Dark Mode. Engineering functions continue and the high rate engineering data is recorded on the Solid State Recorder, as well as the critical health and safety, and housekeeping engineering on the 1553 bus.

3.2.1.2 Other Modes (Non-Science Data Acquisition)

e. Standby Mode -- The standby mode is a spacecraft commanded pre-determined state which has the following characteristics:

- All cameras are OFF.
- MISR flight computer is powered.
- HR science link is not available

The Standby Mode is used to "gracefully" turn off the instrument or as an interim step to activating the instrument.

f. Safe Mode -- The MISR instrument is commanded to this mode for the Spacecraft in Delta-V mode, and has the goniometer at nadir, the cal plates stowed, and the cover closed. No science data is acquired, but command and telemetry across the 1553 bus is available.

g. Survival Mode -- The instrument is powered off with the spacecraft survival heaters powered. The instrument is monitored only through the hardwired telemetry (see Appendix III). Goniometer at nadir, the cal plates are stowed, and the cover is closed.

h. OFF -- All power is removed from instrument. No telemetry of any kind is available; the goniometer is at nadir, the cal plates are stowed, and the cover is closed.

i. TEST -- The test mode data rate and details are TBD.

Mode transitions for MISR are shown in Figure 2.

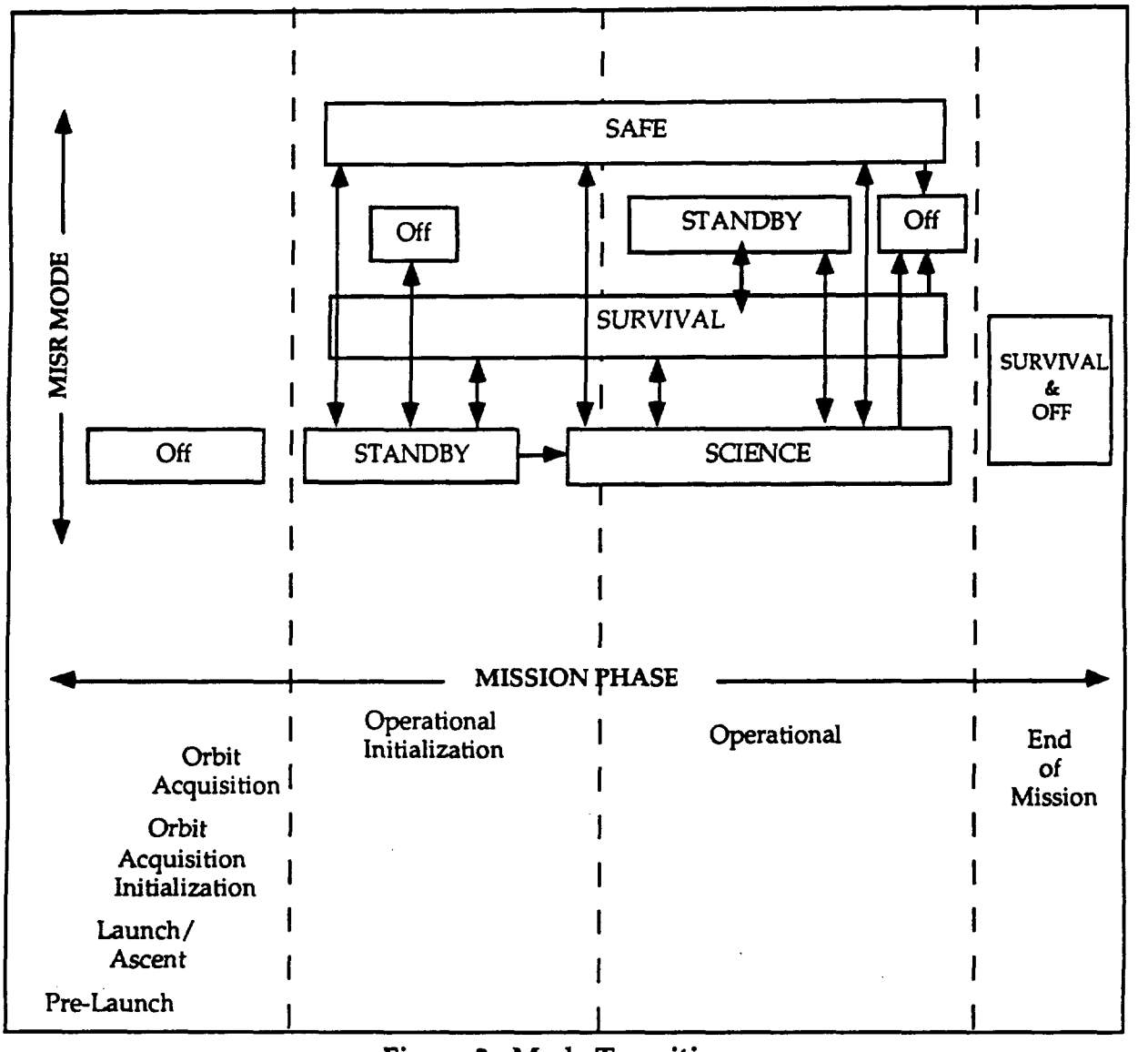

Figure 2 Mode Transitions

3.2.2 Microprocessor Operation

The MISR microprocessor is a 1750A with 210K SRAM, 36K Words PROM .MIL-STD-1553B ports, 32 bit read/16 bit write parallel port, 16 bit serial input and output ports handle the Command and Telemetry interface, the time Mark frequency interface and the high rate science data interface. A test port is also available.

The MISR flight computer will control all MISR operating modes with the exception of Survival/OFF mode which is controlled by the ground and/or SCC. Basic functions of the flight software are command handling, science data collection, engineering data collection, and data transmission. Collected data are packetized and transmitted to the spacecraft upon spacecraft request. Data transmission of packets will depend on the type of packet generated. The flight software will perform periodic health checks of the flight computer as appropriate.

The flight computer software is called a "microprocessor load". The parameter updates containing the activities for the 16 day cycle are called "MISR command load". The contents of the microprocessor can be read by transmission across the 1553B interface.

3.2.3 Instrument Commands

The majority of instrument commanding is performed through the use of the MISR computer. The MISR computer requires only certain commands from the SCC, as listed in Appendix II. The MISR computer receives all commands across the 1553B Command & Data Handling interface.

3.2.4 Instrument Telemetry

MISR instrument telemetry consists of science, calibration, and engineering data CCSDS Version 1 packets sent on the high rate science interface, and normal housekeeping and critical health & safety engineering telemetry sent on the C & DH Interface (1553 bus). Each packet sent on the high rate science interface has a unique Application Process Identification (APID) according to the type of data.

Specific MISR instrument telemetry processing requirements are defined in Appendix III.

3.2.4.1 Science Data

There are two categories of science data to be shipped to the SSR, observational science data and calibration data. These data are transferred across the high rate interface in CCSDS packets. These data require 19 unique APIDs, one for each type of

science or calibration data. One (1) to three (3) packets will be required to transmit the data from each MISR CCD line array. The packets will be of differing lengths, but none will be shorter than 1K bits in length per requirements. Packet types and formats are defined in Appendix III.

3.2.4.2 Engineering Data

The majority of instrument engineering telemetry is recorded with the science data on the SSR.

A separate 1553 command bus allows 2 smaller amounts of engineering telemetry (Housekeeping, and Critical Health & Safety) to be transported to the spacecraft and ground in real time.

The engineering telemetry included in the high rate science stream will be available through the DAAC. It will be archived as Level 0 data, available by request. Necessary parameter values will be used in the Level 1 processing of the science data. The engineering data will be available to the MISR operations team at the SCF for trend analysis, update of alarm limits and limit gradients for transfer to the Flight Operations Team (FOT). See Appendix III for the detailed engineering telemetry format.

3.2.4.3 Housekeeping Data

The current concept for the Housekeeping data is that it is the same as the engineering data from the high rate, but sampled less frequently and shipped out on the 1553 Command & Data Handling Interface. The Housekeeping data are transmitted in all states of MISR operation except Survival/OFF.

3.2.4.4 Critical Health & Safety Data

The Critical Health and Safety Data will be a subset of the engineering telemetry, sent across the 1553 C & DH Interface. Details of the values and format are in Appendix III (currently TBD).

3.2.5 Bus Data Unit

MISR interface with the Bus Data Unit (BDU) for discrete telemetry is:

TYPE	NUMBER ALLOCATED	NUMBER USED
Relay Drive	8	8
Bi-Level	8	7
Passive Analog	16	7

For specifics on these signals, see Appendix III.

3.2.6 Operating Constraints

A constraint is a limitation imposed on the operation of the Spacecraft Bus and instruments in order to protect or prevent compromise of mission goals.

3.2.6.1 Categories of Constraint/Restraints

Constraints have been defined into the following six categories based upon the implications of violating those constraints:

a. **Mission Critical (MC)** - Those constraints which prevent permanent loss of a system, subsystem, or a component which would cause the termination of the mission. The damage to the hardware can be due to anything from a one time event to improper usage over an extended period of time.

b. **Hardware Critical (HC)** - Those constraints which prevent permanent loss of Spacecraft hardware from which recovery to full Spacecraft operational state *can not* be made. The damage to the hardware can be due to anything from a one time event to improper usage over an extended period of time. (e.g. Loss of either CERES instrument would fall into this category.)

c. **Configuration Critical (CC)** - Those constraints which prevent the loss of Spacecraft hardware from which recovery to full Spacecraft operational state *can be* made by switching to redundant hardware.

d. **Data Critical (DC)** - Those constraints which prevent permanent loss or corruption of a particular set of data, either command or telemetry.

e. **Temporary Data Loss (TL)** - Loss or corruption of data, either command or telemetry, that can be regained.

f. **Operational Restriction (OR)** - Guidelines for procedures when a number of possible operational options exist or information relevant to the proper operation of the Spacecraft.

3.2.6.2 MISR Operating Constraints

In order to ensure proper instrument performance, or prevent instrument damage, the following constraints are imposed by the MISR instrument on spacecraft integration and test activities, launch and operations.

a. Initial activation shall be performed during real-time contact with the Spacecraft.

b. The instrument cover cannot be closed unless calibration targets are stowed.

c. The instrument cover cannot be opened unless calibration targets are stowed.

d. Calibration targets cannot be deployed until the cover is fully open.

e. The goniometer cannot be operated unless the cover is unlatched.

f. No mechanism can be moved until unlatched.

g. No mechanism can be relatched in flight.

3.2.7 Activation

MISR is powered OFF during launch.

The MISR is configured for activation as follows:

MISR is powered on and checked out during the Spacecraft Operational Initialization Mission Phase. (See section 4.1 for phase definitions).

The actual activation sequence(s) are TBD and will be added at a later date.

4 OPERATIONAL SYSTEM DEFINITION

The understandings regarding operation of the EOS-AM Spacecraft and ground system, as each relates to instrument operation, are as follows:

4.1 Spacecraft Bus

The EOS-AM Spacecraft Bus provides the platform for science instrument observations, and provides the environment and services necessary to sustain instrument operability.

The EOS-AM Spacecraft mission can be described by seven mission phases. Each mission phase represents a predefined period during which a set of interrelated operations and activities are performed. The primary activities associated with these mission phases are:

a. Prelaunch -- Launch readiness of the Spacecraft, launch vehicle, and associated ground elements is established and verified.

b. Launch / Ascent -- The launch vehicle places the Spacecraft in the injection orbit and the Spacecraft senses separation from the launch vehicle.

c. Orbit Acquisition Initialization -- A positive Spacecraft energy balance and a S-Band communications link is established. A stable earth-oriented attitude is attained.

d. Orbit Acquisition -- The Spacecraft performs the maneuvers necessary to achieve operational orbit. These maneuvers are designed by the cognizant operations elements and initiated by ground command under Flight Operations Team control.

e. Operational Initialization -- The Spacecraft operational orbit is acquired. A complete housekeeping and instrument equipment checkout is performed by the Flight Operations Team with technical direction from the Spacecraft Bus contractor and the instrument PIs or delegates. A fully operational Spacecraft state is established.

f. Operational -- The Flight Operations Team is responsible for conducting Spacecraft operations. Proper Spacecraft orbit is maintained and full resources to the instruments are provided during the science mode.

g. End of Mission -- Upon decision to end the Spacecraft mission, the Spacecraft is placed in a dormant state and permitted to experience a normal orbit decay to re-entry into the Earth's atmosphere.

Figure 3 depicts a top-level flow of the EOS-AM Spacecraft mission phases.

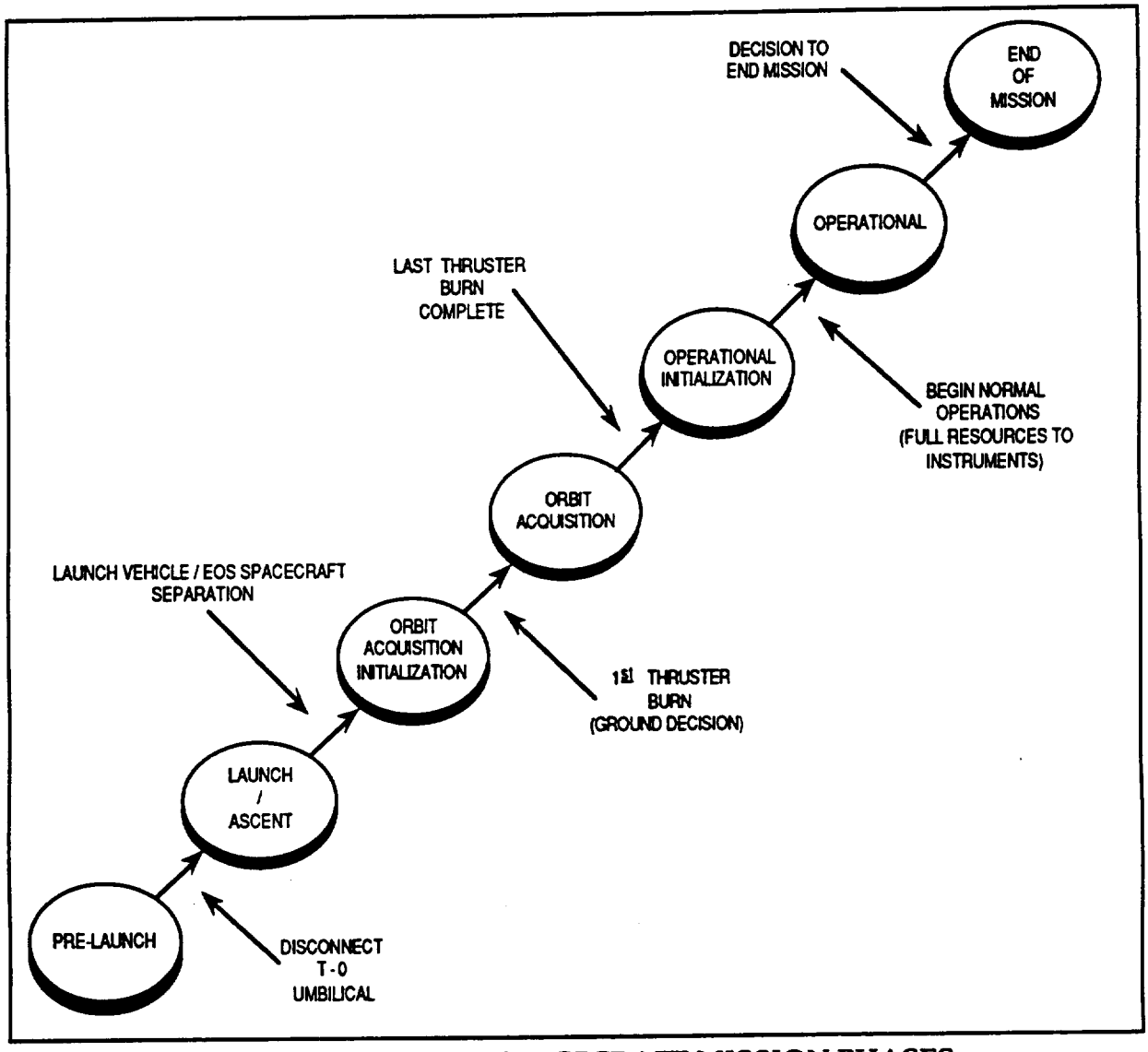

FIGURE 3 EOS-AM SPACECRAFT MISSION PHASES

4.1.1 Command and Telemetry Systems

The Spacecraft Bus command system provides the primary means of controlling the Spacecraft and instrument operations while in orbit. The Spacecraft Bus telemetry system provides the means for monitoring Spacecraft status, health and safety, and for acquiring/storing and retrieving EOS-AM science data. Command and telemetry systems hardware also generates and distributes timing signals, and produces the relative time code which appears within the telemetry format.

During normal operations, 150 Mbps science playback data (when commanded) and 16 kbps real-time housekeeping telemetry data is transmitted throughout each Spacecraft/TDRSS contact. 10 kbps command capability is available to handle uplink transmissions. The other Spacecraft Bus command and telemetry link capabilities are shown in Figure 4 (Uplink Paths) and Figure 5 (Downlink Paths). Commands may be preloaded into the SCC and issued by the stored command capability at designated times. Repetitive sequences of commands may be stored within the SCC and activated by an initiate command to reduce command transmission and storage volume.

SERVICE	SPACECRAFT ANTENNA	DATA RATE	REMARKS
SSA	HIGH GAIN	10 Kbps	NORMAL COMMAND OPERATIONS HIGH-RATE COMMANDS
SMA	HIGH GAIN	1 Kbps	LOW-RATE COMMANDS
SSA	OMNI	125 Bps	CONTINGENCY VERY LOW-RATE COMMANDS
DSN/GN/WOTS	OMNI	2 Kbps	EMERGENCY

LEGEND

SSA = S-BAND SINGLE ACCESS
SMA = S-BAND MULTIPLE ACCESS

DSN = DEEP SPACE NETWORK
GN = GROUND NETWORK
WOTS = WALLOPS ORBITAL TRACKING STATION

FIGURE 4 UPLINK PATHS

SERVICE	TYPE	DATA RATES I	Q	ANTENNA	CONTENT	USE
KSA	Play Back or Real Time	75 Mbps	75 Mbps	High Gain	Science Data	Science Mission Processing
SSA	Play Back		256 Kbps	High Gain	Health & Safety Housekeeping Data SCC Dump Data	As required for Anomaly follow up
	Real Time	16 Kbps	16 Kbps			Routine Operation
			1 Kbps	OMNI	Critical Health & Safety SCC Dump Data	Operation without High Gain Antenna
			1 Kbps			
SMA	Real Time		16 Kbps	High Gain	Housekeeping Data Diagnostic	Operation without SSA
DSN GN WOTS	Real Time	16 Kbps	16 Kbps	OMNI	Housekeeping Data Diagnostic	Operation without TDRSS
	Play Back		512 Kbps			Emergency Operations
DB	Real Time	12.5 Mbps	12.5 Mbps	Direct Access System	Real-Time Science Data	MODIS Real-Time Data
DB/DDL		12.5 Mbps	105 Mbps			MODIS (I), ASTER (Q) Real-Time Data
DP	Play Back	75 Mbps	75 Mbps	Direct Access System	Playback Science Data	Instrument Playback Data
DB	Real Time	12.5 Mbps		Direct Access System	Real-Time Science Data	MODIS Real-Time Data
DP	Play Back		105 Mbps		Playback Science Data	Instrument Playback Data

LEGEND

DB = Direct Broadcast
DDL = Direct Downlink
DP = Direct Playback
DSN = Deep Space Network
GN = Ground Network
WOTS = Wallops Orbital Tracking Station

KSA = K-band single access
SSA = S-band single access
SMA = S-band multiple access
TDRSS = Tracking and Data Relay Satellite System

FIGURE 5 DOWNLINK PATHS

The Direct Access System (DAS) provides for direct-to-user downlink of science data via the X-band transmission system which is independent of the High Gain Antenna (HGA). A summary of Spacecraft downlink services, including the DAS, is shown in Figure 5 (Downlink Paths).

Normal operation will be to configure the DAS for continuous operation in the Direct Broadcast (DB) mode, providing uninterrupted output of real-time MODIS science data along the orbital path. When scheduled by the EOC, the DAS Direct Broadcast/Direct Downlink (DB/DDL) mode will provide direct-to-user ASTER science data on the X-Band Q channel, in addition to the MODIS data on the X-Band I channel.

The DAS Direct Playback (DP) mode is considered an emergency mode and will be used only in the event the Solid State Recorder (SSR) science data cannot be played back through the HGA.

The EOC scheduling function will coordinate DAS operations with the user ground stations. The Spacecraft DAS services will be managed via the SCC stored command and Relative Time Command Sequence (RTCS) capability.

4.1.2 Spacecraft Controls Computer

The Spacecraft Controls Computer (SCC) provides the hardware, software and firmware support for control of on-board operational processes.

Specific requirements for interaction between SCC functions and instrument operation are defined in Appendix I.

4.1.2.1 Spacecraft Controls Computer Description

There are redundant SCCs, each of which hosts the firmware to provide SCC initialization functions. Both SCCs can be simultaneously powered and host the full software load but only one SCC can be active at any time. Once loaded, the active SCC software provides a real-time Operating System and supports the execution of application software for the Spacecraft subsystems and instruments. The SCC provides a number of application software services to maintain Spacecraft and instrument operability.

a. The SCC Operating System/Executive is a standardized operating system

   which supports the execution of the SCC applications software and manages the SCC resources (I/O, scheduling, memory management, timing).

b. The Command, Telemetry and Control (CT&C) application interfaces with all SCC-resident software and provides the following services:

1. Validation and distribution of ground commands for SCC applications software execution.

2. Performs system level Fault Detection, Isolation and Recovery (FDIR). The FDIR software resides in the SCC applications programs and in the Telemetry Monitor (TMON).

3. Storage and processing of Absolute Time Commands (ATC) and Relative Time Command Sequences (RTCS).

4. Sequencing control of SCC-issued subsystem and instrument commands (Absolute-time stored commands, Relative-time stored commands, closed-loop control commands and FDIR commands).

5. Performs Spacecraft Time management, and provides for generation and distribution of the SCC Time of Day (TOD) information to the instruments.

6. Collects SCC telemetry for inclusion in the downlinked telemetry stream.

7. Collects, formats and distributes Ancillary data to the instruments via the Command & Telemetry Bus.

c. The Attitude Determination and Control (ADAC) application software provides software to acquire and maintain Spacecraft attitude within the accuracy limits necessary for instrument operation. The ADAC application provides control of the Solar Array Drive and High Gain Antenna via closed-loop control and FDIR commands.

d. The Navigation (NAV) software performs Spacecraft orbit determination and control. NAV provides position and vector information to the ADAC. NAV also provides telemetry data, Doppler compensation information, closed-loop control and FDIR commands.

e. The Thermal Monitor and Control Software (TMCS) provides autonomous control of the active Spacecraft thermal control elements [Heater Controller Electronics (HCEs) and Capillary Pump Heat Transport System (CPHTS)] to maintain the Spacecraft bus and instrument temperatures within allowable operational limits. The TMCS provides telemetry data, closed-loop control and FDIR commands.

f. The Power Monitor and Control Software (PMCS) provides autonomous control of the Electrical Power System (EPS), including battery charge control and automatic load shedding. The PMCS provides telemetry data, closed-loop control commands and FDIR commands.

The Telemetry Monitor (TMON) will be used to monitor critical Spacecraft bus and instrument telemetry. TMON provides the on-board capability to monitor spacecraft housekeeping data and SCC memory and to initiate autonomous action when predefined anomalous conditions occur. TMON has the capability to mask out telemetry information, perform logical operations on the telemetry information and compare the results to predefined values. If specific anomalous conditions occur, TMON will trigger predetermined actions which may be 1) no action, 2) issue a spacecraft command, or 3) issue a command to activate a Relative Time Command Sequence (RTCS). When a TMON action is triggered, a message will be inserted in the spacecraft activity log which will specifically define the action taken. TMON is table-driven via the telemetry monitor tables, which are ground-controllable. Each TMON function may be individually enabled or disabled by ground command. Each TMON function may also be inhibited from issuing its predetermined commands, while still being allowed to perform its comparison check and notify the activity log if an anomalous condition is detected.

The Fault Detection, Isolation and Recovery (FDIR) system is designed to autonomously reconfigure the Spacecraft in response to predefined survival-critical hardware or software failures. The intent of the FDIR is to minimize autonomous switching, while protecting the Spacecraft Bus and instruments and providing those services required for survival. Anomalies which are not time critical will be resolved by ground intervention rather than FDIR action. Most of the FDIR software resides in the SCC application software programs. FDIR utilizes the TMON software to perform simple, table-driven FDIR functions.

The FDIR system monitors the state of various Spacecraft hardware and software functions, determines fault occurence and generates fault recovery commands to the Spacecraft. When necessary, the FDIR controls the Spacecraft entry into Safe

Mode and Survival Mode. Since the SCC may not be functional during these modes, some FDIR functions are distributed in hardware throughout the Spacecraft. If the SCC is non-functional, stored command and RTCS operation will also be interrupted. Safe Mode and Survival Mode recovery will be accomplished only by ground command.

4.1.2.2 Spacecraft Controls Computer Operation

During normal flight operations a SCC stored command table memory load will be performed once per day with the list of Absolute Time Commands (ATC) and associated time tags necessary to perform Spacecraft operations for the next 24 hours. Figure 6 shows the stored command structure.

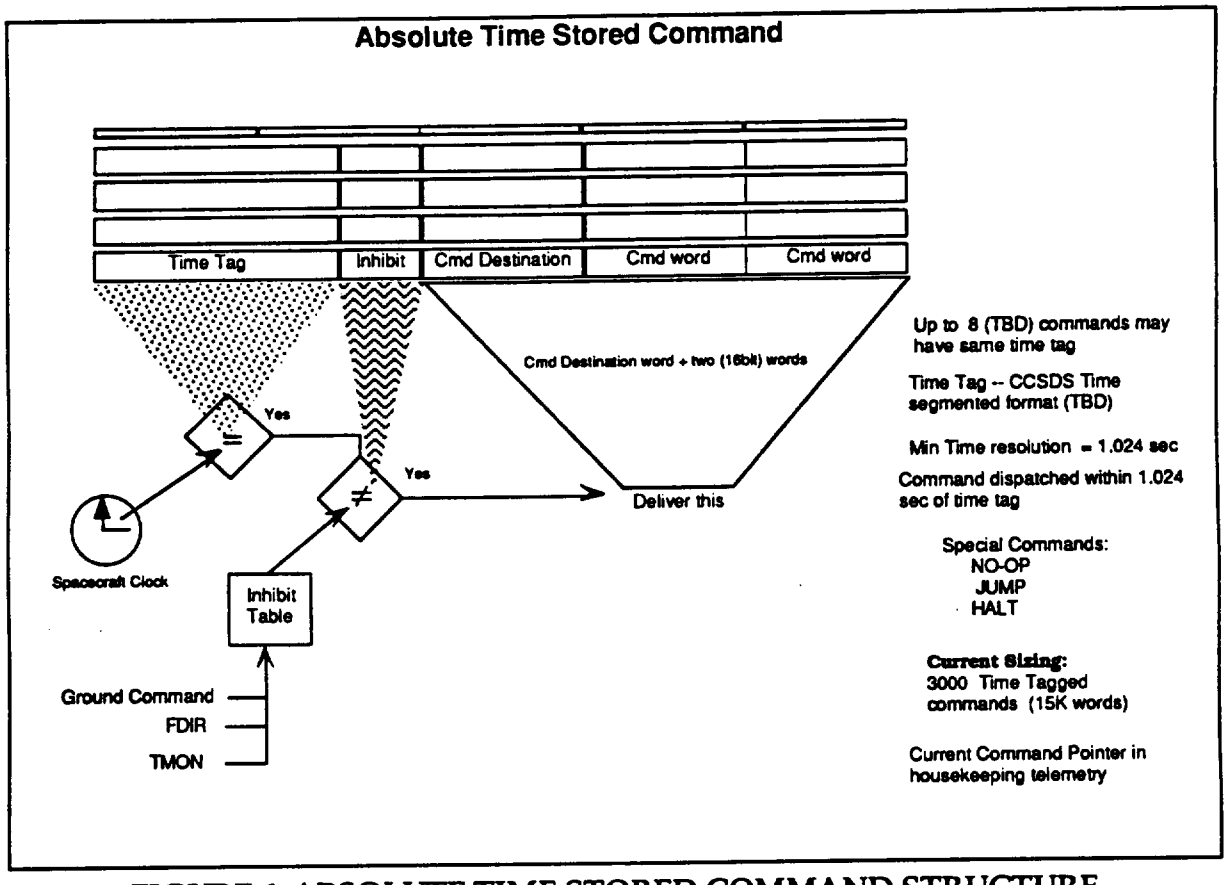

FIGURE 6 ABSOLUTE TIME STORED COMMAND STRUCTURE

The SCC will distibute each stored command to the appropriate spacecraft or instrument subsystem when the time tag matches the Spacecraft time. The command time tag resolution is 1.024 seconds. The SCC has the capability to accept, store and distribute up to 3000 stored commands. Each stored command has an associated inhibit identifier by which the SCC identifies the functional group to which the command belongs. All commands in a functional command group (as determined by the SCC inhibit table) may be inhibited from execution by either ground command or FDIR/TMON generated command. Figure 7 depicts stored command operation. Stored command loads will be planned to occur at least 6 hours prior to the end of the last stored command load, so there may be up to 30 hours of Spacecraft commands in the stored command table at that time. Specific stored-command requirements for instrument operation are defined in Appendix I.

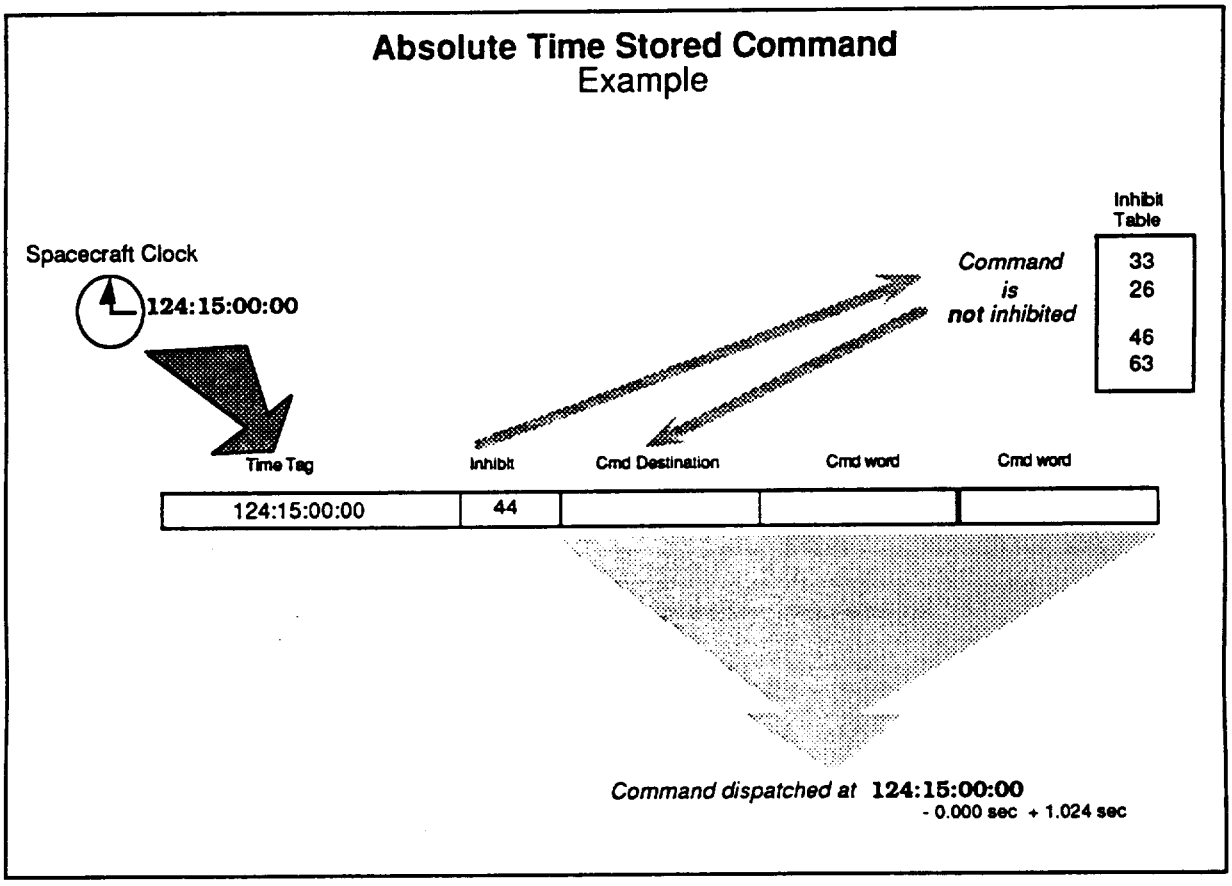

FIGURE 7 ABSOLUTE TIME STORED COMMAND OPERATION

During flight operations, groups of commands known as Relative Time Command Sequences (RTCSs) will be used to provide at least 128 SCC-resident predefined command sequences. Each RTCS has an associated RTCS sequence number, an inhibit ID, and up to 16 Relative Time Commands with associated relative time tags. Figure 8 illustrates the RTCS structure. RTCSs may be executed by ground command, stored command, SCC (FDIR/TMON) generated command or by another Relative Time Command. The relative time tag associated with each command defines the time delay relative to the previously dispatched command. Relative time tags have a resolution of 1.024 seconds. Each RTCS will have an associated inhibit identifier by which the RTCS may be inhibited from execution by ground command or FDIR/TMON generated command. No inhibit identifier will be provided for individual commands within the RTCS. Multiple RTCSs may be active at the same time.

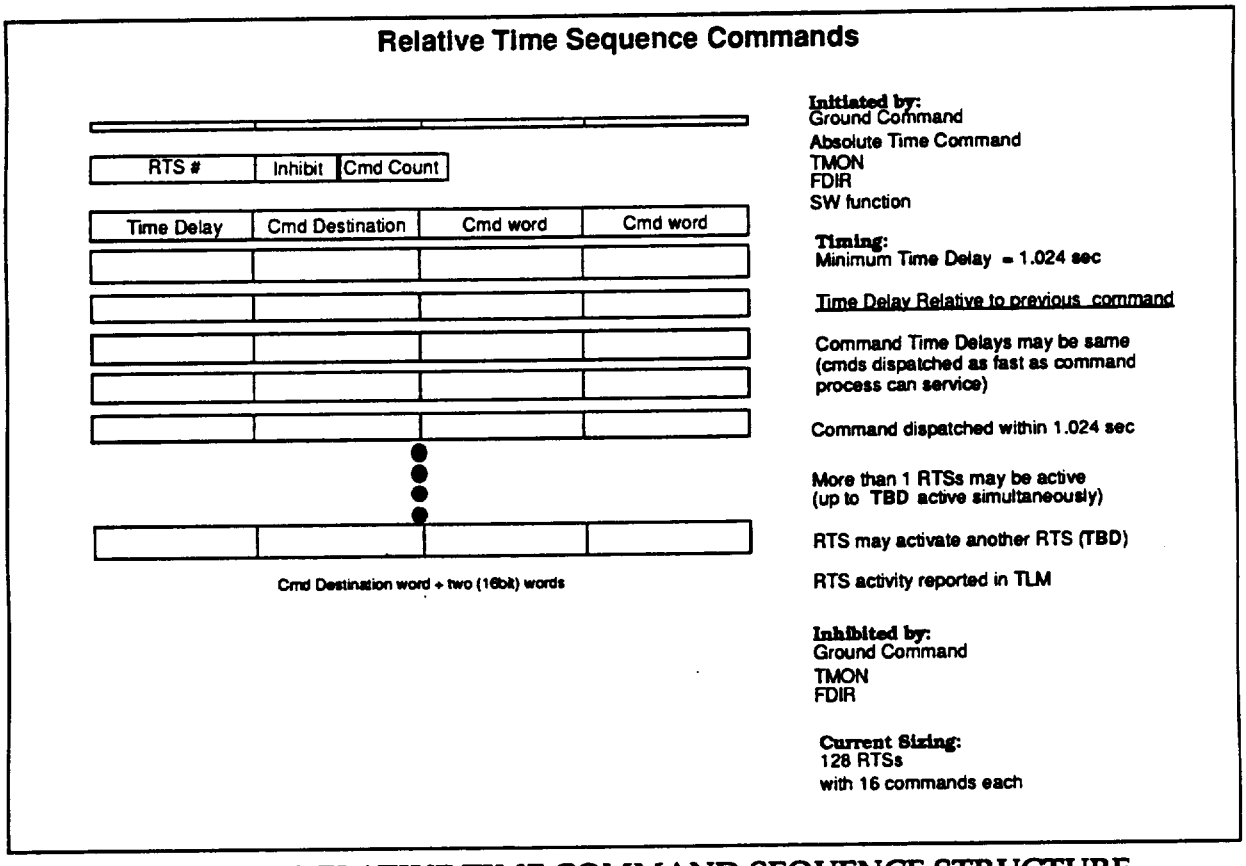

FIGURE 8 RELATIVE TIME COMMAND SEQUENCE STRUCTURE

RTCSs will be loaded into the SCC via ground command and will remain in the SCC memory until removed or over written by ground command. They do not require reloading on a regular basis. RTCSs will be used to perform repetitive functions on-board the Spacecraft (thus reducing the number of stored commands required), and as a command resource for the TMON/FDIR software.

Specialized RTCSs may be loaded, particularly during the Launch through Operational Initialization Mission Phases, for such time-critical operations as solar array release and deployment in order to minimize the need for ground control. These RTCSs will be deleted and/or replaced for normal operations.

Figure 9 depicts RTCS operation.

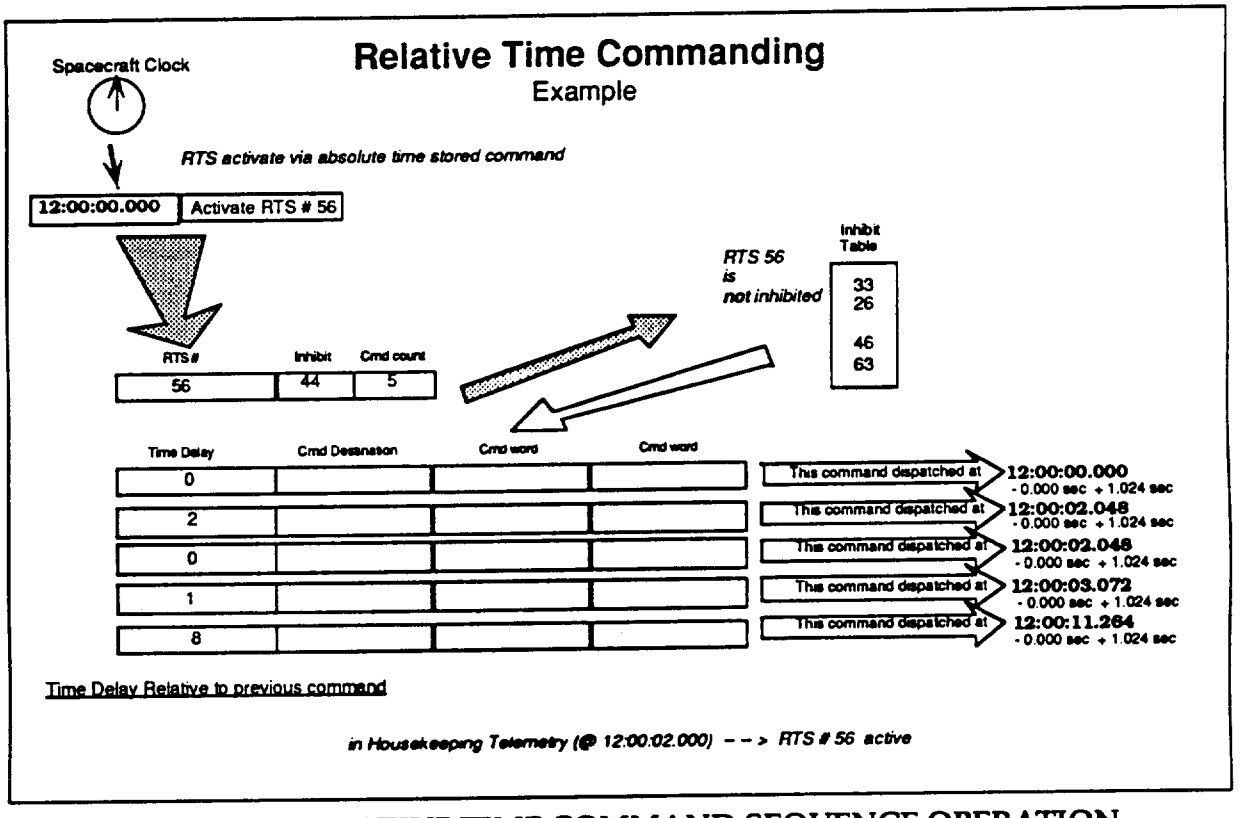

FIGURE 9 RELATIVE TIME COMMAND SEQUENCE OPERATION

4.1.3 Command and Telemetry Interface Unit

The Command and Telemetry Interface Unit (CTIU) is a central component for command and telemetry processing. The CTIU provides the processing and routing of command and telemetry data between the ground system, the Spacecraft Controls Computer and the Spacecraft instruments and housekeeping systems. The CTIU provides the following spacecraft services:

a. Uplink command decoding, processing, and distribution within the spacecraft.

b. Collection and formatting of spacecraft housekeeping and ancillary data in preparation for mass storage or immediate downlink.

c. Spacecraft command, telemetry and closed-loop interfaces to the Spacecraft Controls Computer (SCC).

d. Maintenance and distribution of Spacecraft Time and reference frequencies within the spacecraft including the coordination of Spacecraft Time with ground timing and ranging systems.

There are two redundant CTIUs, only one of which is active at any time and which acts as the Command and Telemetry (C&T) bus controller. The other CTIU is a 'hot standby' and acts as a Remote Terminal (RT). Both CTIUs are always powered when the Spacecraft is powered. Both the active and standby CTIUs can receive and execute uplinked CTIU-specific commands.

The active CTIU receives commands and command data from the ground via the S-Band Transponder, in addition to FDIR commands , closed-loop commands, and Absolute-time and Relative- time stored commands from the Spacecraft Controls Computer. CTIU-specific commands are executed immediately, while SCC-specific commands and command data (SCC table, software or stored command loads) are transferred to the SCC via the CTIU-to-SCC serial interface. The CTIU processes and distributes all other command data (Spacecraft or instrument commands and microprocessor loads) to the appropriate subsystem or instrument via the C&T bus. Since the SCC may be inoperative when the Spacecraft is in safe mode, only the CTIU processes real-time ground commands. Figure 10 illustrates the CTIU command processing flow.

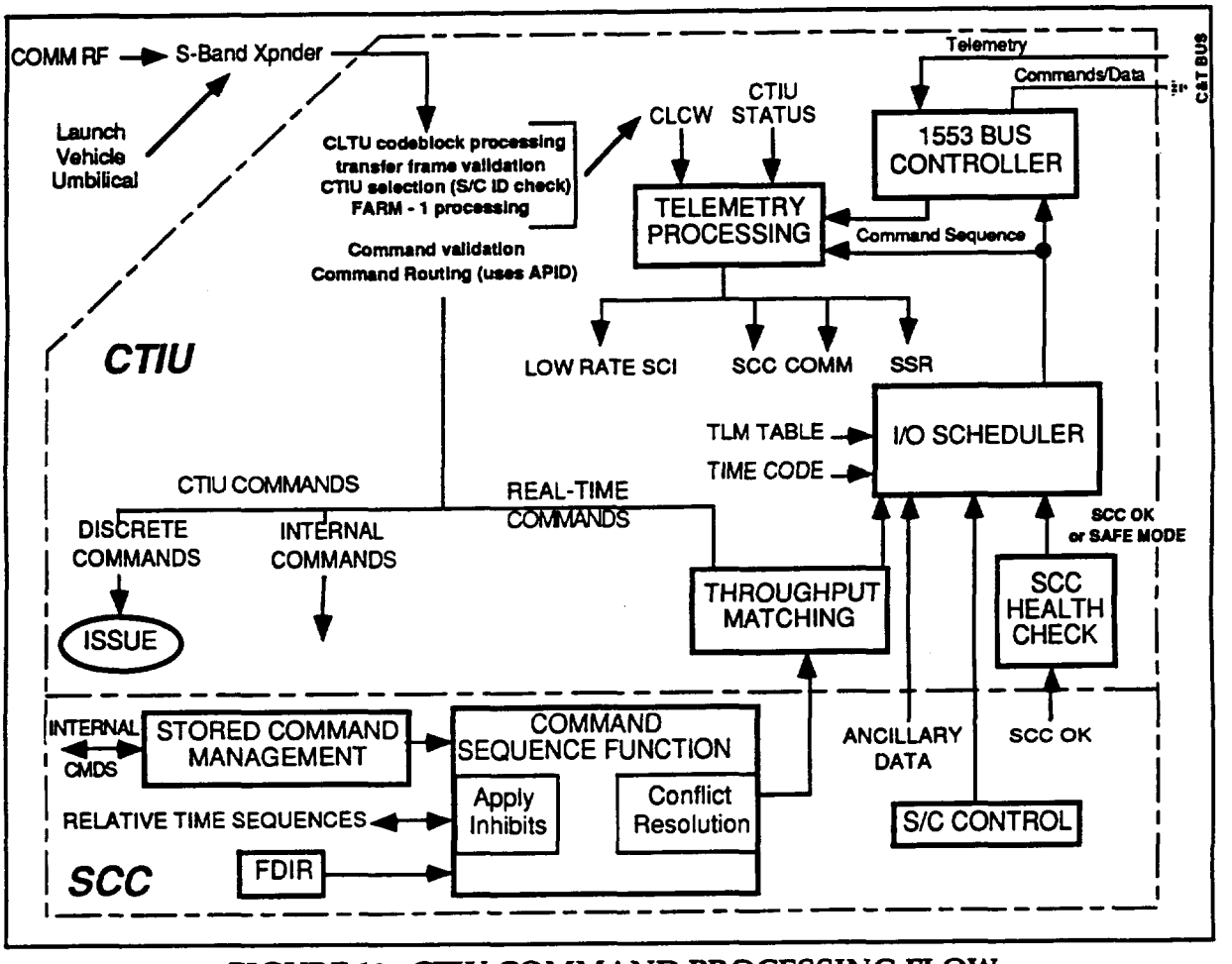

FIGURE 10 CTIU COMMAND PROCESSING FLOW

The CTIU receives Spacecraft subsystem and instrument telemetry via the C&T bus and the Bus Data Units (BDU). The CTIU formats the telemetry data for output to the Solid State Recorder (SSR) and/or the S-Band Transponder. Figure 11 shows the CTIU telemetry processing flow.

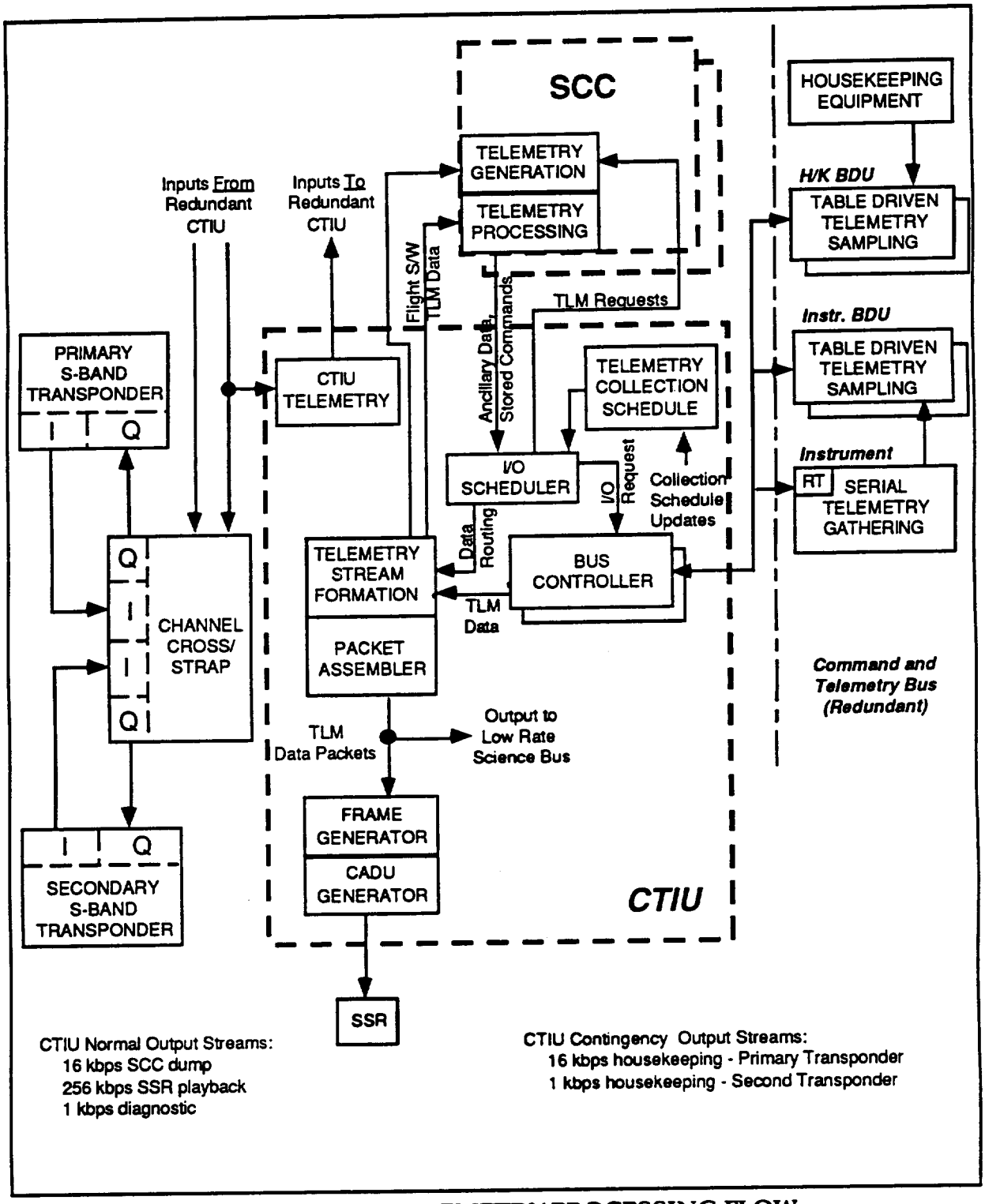

Figure 11 CTIU TELEMETRY PROCESSING FLOW

The active CTIU also provides the Spacecraft master clock and time services. The Master Oscillator (MO) provides the frequency reference signals to the S-Band transponder and CTIU with a frequency accuracy of 1 part in 10^8.

The CTIU propagates the master Spacecraft Clock using the MO frequency reference. The difference between the Spacecraft Clock and Universal Time Code (UTC) is the Clock error, which will grow due to the time-integrated effect of MO frequency errors. The Clock error must be periodically measured, and must be corrected when it approaches 30 milliseconds. The CTIU supports the accurate measurement of the Clock error via the ground based NASA User Spacecraft Clock Calibration System (USCCS). The USCCS is a distributed system using TDRSS White Sands Ground Terminal (WSGT), Network Control Center (NCC), EOS Data and Operations System (EDOS), EOC, and the on-board transponder to determine and correct the Spacecraft Clock error. USCCS software is required in the EOC to process the information and provide the on-board clock bias. The USCCS system currently guarantees calibration accuracy of +/-5 microseconds with respect to UTC. It is anticipated that EOC would request a clock calibration as often as once per day, and will update the Clock bias as necessary to maintain 10 microsecond accuracy.

The Spacecraft Clock may be set and adjusted either by ground command or from SCC-resident software. Both initialization and delta-time (fine adjustment) commands are supported. Clock initialization commands generally cause service interruption in the navigation system and will be used only for system initialization and failure recovery. Delta-time adjustment commands may be executed with a 1 microsecond accuracy and cause minimal disturbance to the system for short periods of time. Delta-time adjustments will be used for clock adjustments when necessary. Clock adjustment and bias update operations will be scheduled to provide minimum perturbation to instrument operations. The EOC FOT will provide coordination of all clock adjustments and bias updates and notification of all users of time-tagged Spacecraft data, as required.

The CTIU also provides two separate time and synchronization services :

a. The Standard Time (ST) service provides moderate accuracy synchronization and Time Of Day (TOD) information in support of Spacecraft housekeeping functions. In general, Spacecraft functions (except for navigation) do not require knowledge of UTC, but some functions such as stored command processing do require Time Of Day (TOD) knowledge.

b. The Precise Time (PT) service delivers high accuracy, high precision time data to the science instruments and the on-board navigation function, which have more stringent accuracy requirements. The instruments require an on-board time reference accurate to within 100 microseconds relative to UTC. The desired accuracy for navigation measurement data time tagging is +/- 10 microseconds.

4.1.4 Science Formatting Equipment

The Science Formatting Equipment (SFE) is part of the high-rate data handling system for the Spacecraft. The major function of the SFE is to internally route science data from the SSR, High Rate instrument and Low Rate Science Bus input ports to the appropriate SSR, KSA and DAS modulator output ports. Data routing in the SFE consists of processing the asynchronous packetized input data and transferring the data, in the proper format, to the KSA and/or DAS modulators or to the SSR output (record) port at data rates up to 150 Mbps.

The SFE is fully redundant, including the buses, the bus controllers, and the internally cross-strapped input and output ports. The SFE generates all internally used frequencies.

The SFE input interfaces are defined as follows:

a. The Low Rate Science Bus provides for up to 6 remote terminals including the instruments and the 2 CTIUs. The Low Rate Science Bus will carry telemetry data, ancillary data, and low rate science instrument (CERES and MOPITT) data with a maximum aggregate input data rate of 200 kbps. The SFE will control the Low Rate Science Bus via two Bus Controllers, only one of which will be active at any given time.

b. Each of the SFE High Rate serial input ports will accept variable size packets of science data at up to 50 Mbps from the high rate data Instruments.

c. The SFE will receive SSR playback data on two redundant ports, only one of which will be active at any time. The data rate for the active port will be selectable at 0, 105 or 150 Mbps.

d. The BDU interface provides control of the SFE configuration, operating mode and input/output rates through either SCC or ground generated commands

The SFE output interfaces are as follows:

a. The SFE will output independent data streams to each channel of the redundant KSA and DAS modulators. The KSA modulators each have a single channel, while the DAS modulators each have two independent channels.

b. The SSR record interface consists of unidirectional ports from the SFE to the SSR. Only the SSR Record interface port which is connected to the active SSR controller will be active. The SFE/SSR record data stream consists of Channel Access Data Unit (CADU at a fixed recording rate of 150 Mbps.

c. The BDU interface provides for the collection of SFE housekeeping telemetry During normal operations the SFE will be configured to output specific data streams, accepting and routing instrument and Low Rate Science Bus data to the SSR and the modulators:

   1. The SSR record output will be configured to record all High Rate instrument and Low Rate Science Bus data.

   2. The KSA modulator output will be configured for SSR playback via TDRSS, requiring ground commands during each TDRSS contact to turn the SFE playback clock on and off.

   3. The Direct Access System (DAS) Direct Broadcast (DB) link will transmit real-time MODIS instrument data.

   4. The DAS Direct Downlink (DDL) will transmit ASTER real-time data.

   The FOT will monitor the SFE performance during real-time housekeeping telemetry data reception.

The SFE interfaces are shown in Figure 12.

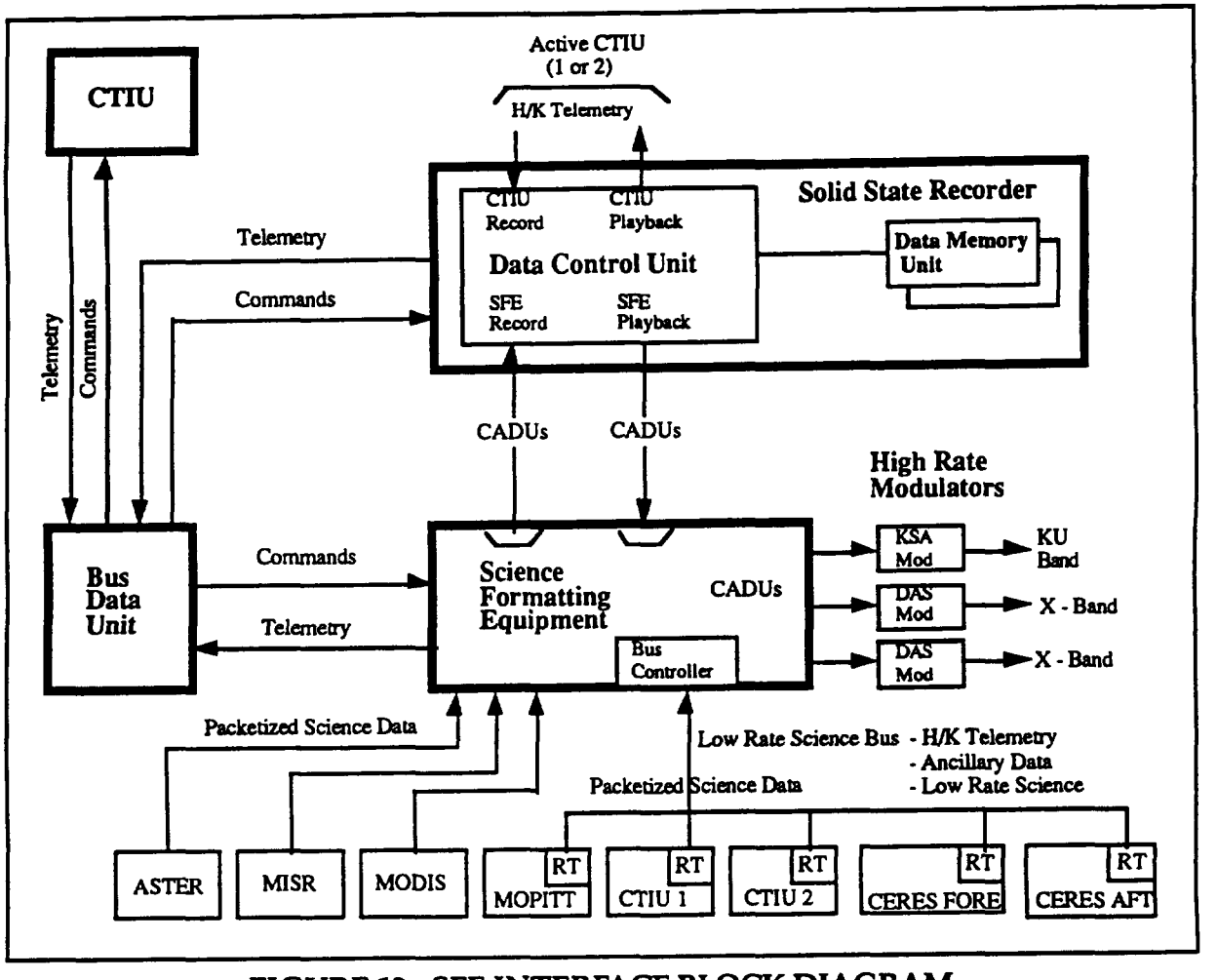

FIGURE 12 SFE INTERFACE BLOCK DIAGRAM

4.1.5 Solid State Recorder

The Solid State Recorder (SSR) is a high capacity data storage device consisting of two redundant Data Control Units (DCUs), and two identical Data Memory Units (DMUs). Figure 13 shows the SSR basic configuration. In operation, only one DCU is active at a given time. The DCU contains the record/playback processing, and command and telemetry processing. A part of the 2.4 Gbit DCU memory (357 Mbit) is allocated to housekeeping telemetry data storage. The total 140 Gbit memory capacity is provided by the two DMUs plus the local memory contained in the DCU. The SSR may be commanded into a Low Power Mode in order to provide the CTIU interfaces and the associated record/playback functions while minimizing the SSR power dissipation. In the Low Power Mode, only the active DMU and its local memory is powered and housekeeping telemetry record and playback via the CTIU is available. Low Power Mode is entered when the SSR is powered up and may be entered by command from the Science Mode.

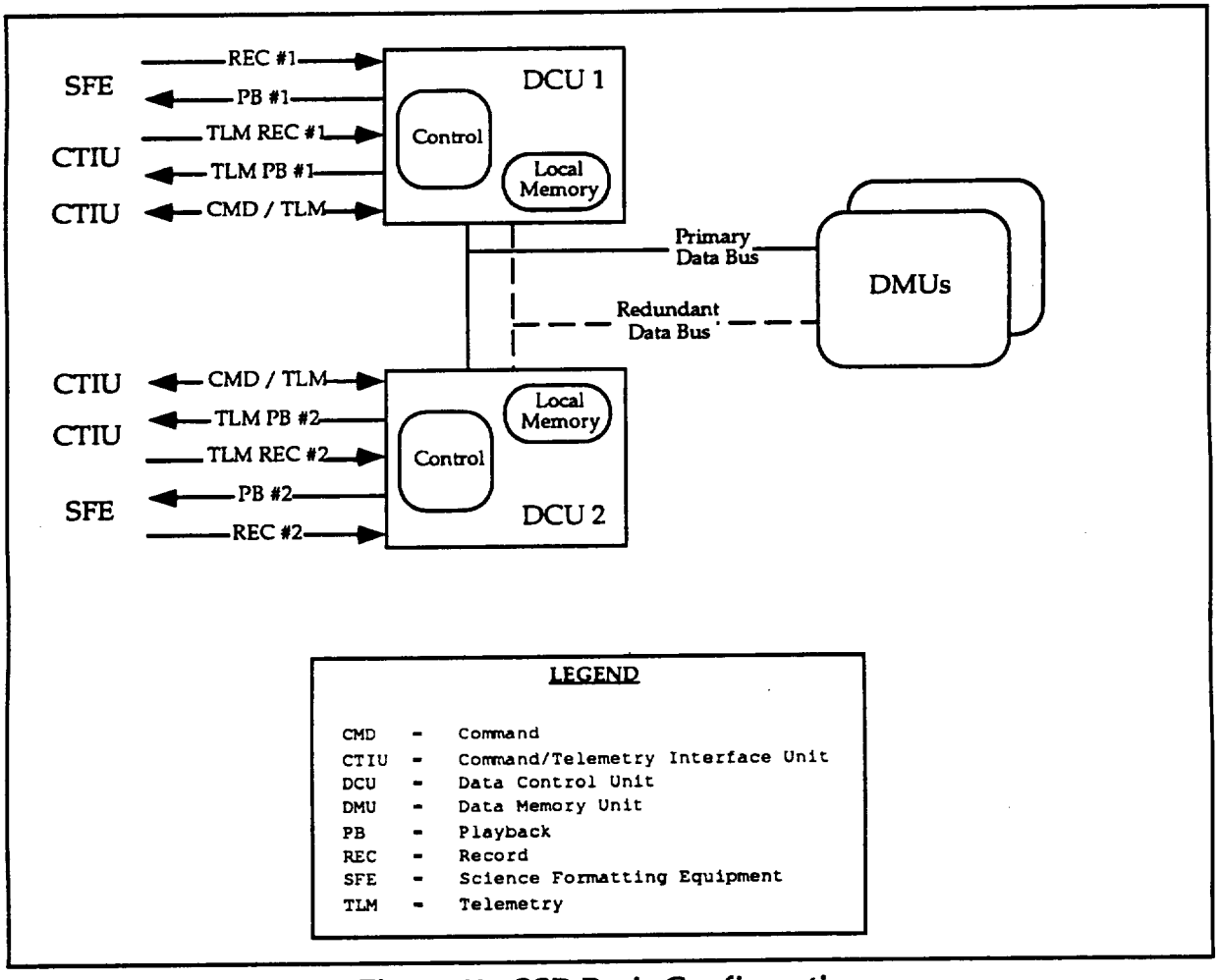

Figure 13 SSR Basic Configuration

The SSR is capable of simultaneously recording and playing back science data via interfaces with the Science Formatting Equipment (SFE). Concurrently the SSR is capable of recording or playing back housekeeping telemetry data via an interface with the CTIU. The SFE and CTIU interfaces operate independently of each other.

The SSR is capable of recording science data from the SFE at a data rate of 150 Mbps. The SSR will sort and record spacecraft science data in separate logical data buffers sorted according to the Virtual Channel Identifier (VCID) of the data source. Up to eight science data storage areas [circular first in first out (FIFO)] buffers may be provided, each accepting data from a single or multiple VCIDs. The four ASTER VCIDs may be directed to a single data buffer. Figure 14 illustrates the SSR science data buffer utilization. This capability will provide for selective playback of the science data. The proposed buffer sizes will accommodate at least one full orbit of data when instruments are operated in their predicted profiles. The current proposed buffer sizes are shown in Table IV. Each SSR buffer may be commanded to allow the oldest data to be overwritten or to protect the data (overwrite inhibited).

Table IV Proposed SSR Buffer Sizing

Data Type	Buffer Size	Remarks
Housekeeping	357 Mbits	Four Orbits of data
Low Rate Science	357 Mbits	105 minutes of data
MODIS	44.8 Gbits	60 mins day rate, 50 mins night rate
MISR	24.9 Gbits	67 mins of data. > 1 orbit nominal ops
ASTER	69.6 Gbits	12.9 mins at 90 Mbps.

The SSR is capable of playing back recorded science data at a maximum data rate of 150 Mbps. The SSR input and output data streams consist of integral numbers of 8192 bit blocks which are referred to as Channel Access Data Units (CADUs). The first requested CADU for each requested playback shall be preceded by the last 100 to 256 CADUs played back from this buffer during the previous playback. The SSR will not erase science data during playback, but the oldest data will be overwritten when a new recording session occurs directly over previously recorded data. The science data output stream from each buffer will be in the same time order in which it was recorded. The SSR is capable of playing back any ground-specified portion of the stored science data.

The SSR is capable of recording and playing back 16 Kbps Spacecraft housekeeping telemetry data via cross-strapped interfaces to the Spacecraft CTIUs. The housekeeping input and output data streams consist of housekeeping telemetry CADUs which are recorded in and played back from the 357 Mbit circular FIFO DCU buffer. The SSR can record or playback the housekeeping data concurrently with the science data playback, but cannot record and playback housekeeping data simultaneously. After four orbits the DCU buffer will be filled, and the SSR will overwrite the housekeeping data.

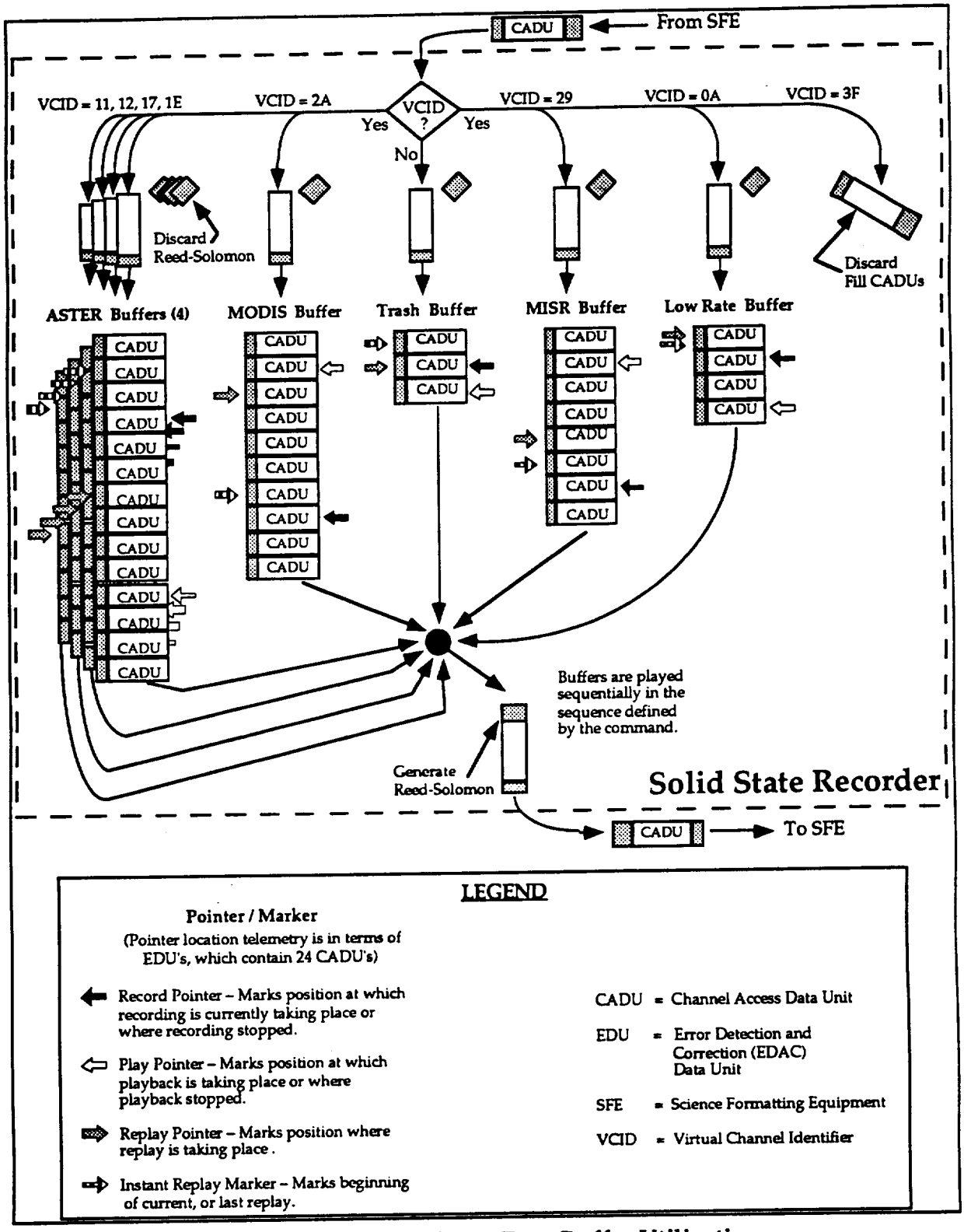

Figure 14 SSR Science Data Buffer Utilization

See Figure 15 for a typical operating scenario.

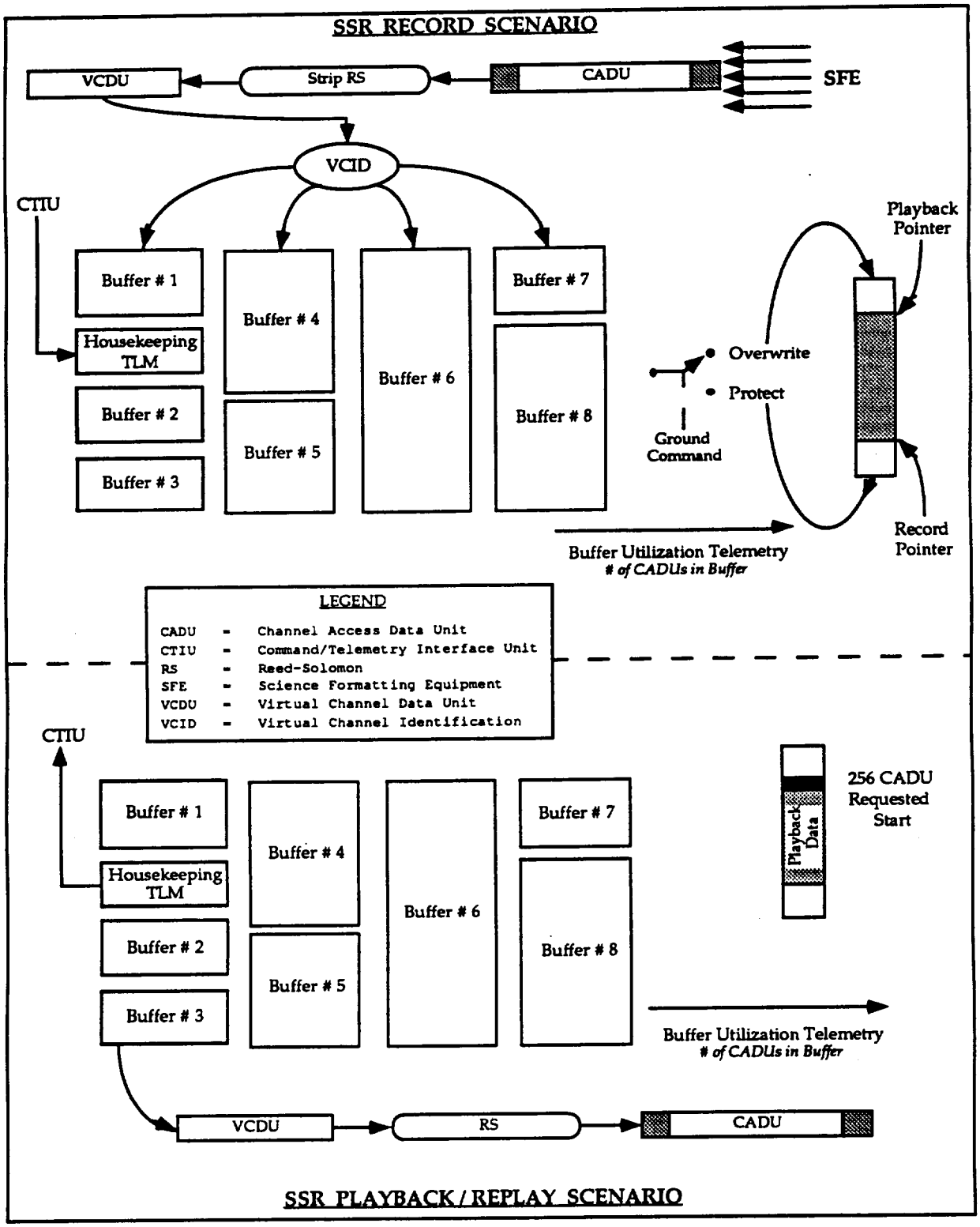

Figure 15 SSR Typical Operating Scenario

The SSR plays back stored housekeeping data at a ground-commanded rate of either 256 Kbps (via TDRSS) or 512 Kbps (via DSN/GN/WOTS). The output data stream consists of integral numbers of CADUs. The first requested CADU for each playback will be preceded by the last 100 to 256 CADUs played back from the buffer during the previous playback. The SSR will not erase telemetry data during playback, but the data will be overwritten when a new record segment occurs directly over previously recorded data regardless of the playback status of the previously recorded data. The telemetry data output stream will be in the same time order in which it was recorded.

The SSR telemetry will provide status information for each buffer which will be evaluated by the EOC to assure complete data retrieval. The status information will indicate:

a. The locations of the beginning of data that has not been dumped
b. The current location of the record pointer
c. The location of the dump pointer.

The EOC will track the instrument science and the housekeeping telemetry data times, the data position in the SSR memory, and the playback status of recorded data in order to ensure no loss of either science or housekeeping data.

Normal SSR operation will be to record all science data, with the SSR always in Record mode and the SSR data input being determined by the instrument operations. The high rate instruments and Low Rate Science Bus output will be recorded in separate buffers. The operating plan for retrieving science data from the SSR is to play back the data during two nominal 10 minute TDRSS contacts during each EOS-AM orbit. At the data rates available, a full SSR (all buffers full) would take approximately 18 minutes to dump completely. Since the peak data generation of the instrument set occurs during the daylight observations, and six to eight minutes of SSR playback will occur during each ten minute TDRSS contact, all data contained on the SSR may not be retrievable during a single 10 minute contact.

TDRSS contact spacing and location will be influenced by the Spacecraft/TDRS/Earth geometry and the TDRSS scheduling requirements, but equally spaced contacts (approximately 40 minutes apart) are the current plan.

SSR operations will be controlled by a combination of stored and real-time commands. Science instrument data start/stop operations will be initiated by stored commands generated by the EOC scheduling function, while memory configuration, mode change, playback and communication link configuration commands will be via real-time commands.

Nominal SSR operations (see Figure 16 for the SSR operation profile) will be as follows:

a. The housekeeping telemetry data will be continuously recorded in the DCU memory, overwriting the housekeeping buffer after approximately 3.5 orbits. The housekeeping buffer will be played back only in the event of a Spacecraft anomaly or to provide specific data for ground analysis.

b. The SSR will continuously record CERES, MOPITT, ancillary and telemetry data from the Low Rate Science Bus via the SFE into the Low Rate buffer. This data will continue to be recorded even while the SSR is being played back.

c. The SSR will record science data from the instruments via the SFE into their respective buffers. The ASTER data may be recorded into one buffer or may be sorted by VCID into four different buffers.Instrument data will continue to be recorded even if the SSR is being played back during the record period.

d. The SSR science data will be played back during each scheduled 10 minute TDRSS contact (twice per orbit). The science data buffers will be played back in sequence, oldest data first, such that sufficient space is available in each buffer to accommodate the science data scheduled to be recorded before the next TDRSS contact.

e. The ASTER and MISR buffers will be completely played back if possible.

f. The LOW Rate and MODIS buffers will nominally never be completely emptied since the instruments will be continuously producing science data. Playing back older science data while simultaneously recording new science data will be the normal operational configuration.

g. SSR playback start and stop will be controlled by ground command.

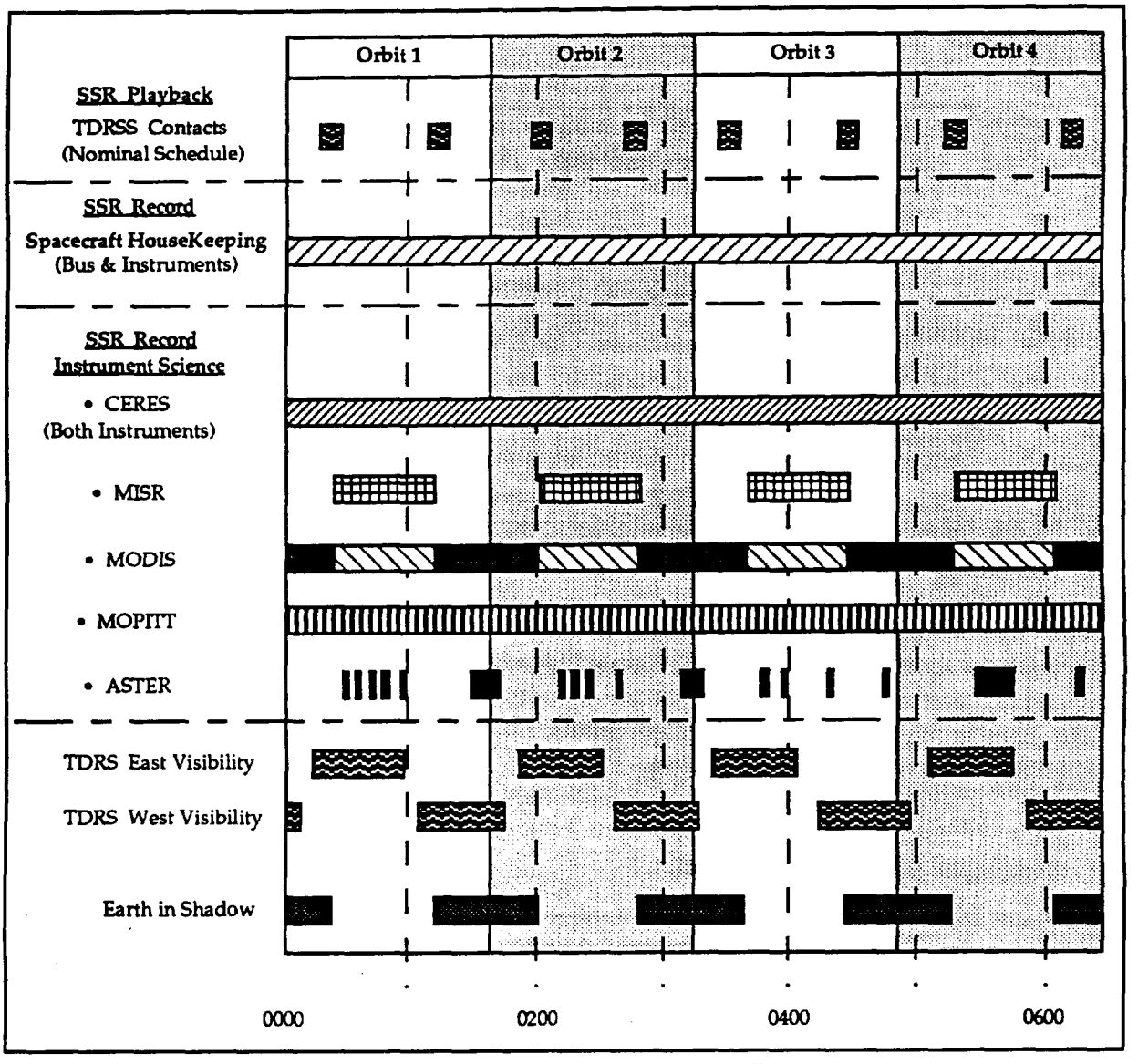

Figure 16 SSR Operation Profile

4.1.6 Bus Data Unit

The Bus Data Unit(s) (BDU) provides standard command and telemetry interfaces between the Spacecraft housekeeping components and instruments. The BDU is an internally redundant device.

The BDUs collect, reformat and transmit housekeeping and instrument telemetry data to the active CTIU via the C&T bus. The BDU provides analog/digital signal conversion and conditioning.

The BDUs also receive command data from the active CTIU via the C&T bus, processing and issuing the commands. BDUs may issue relay drive, logic pulse or serial commands.

4.1.7 Initial Spacecraft Operation

The Spacecraft command and telemetry systems are active during all Spacecraft mission phases, and are fully available to support initial activation and subsequent operation of MISR.

The Spacecraft operational orbit is acquired during the Spacecraft Operational Initialization Phase. A complete housekeeping and instrument equipment checkout is performed and a fully operational system state is established. The EOC activities are augmented by Spacecraft engineering support from the contractor's facility and Instrument Team representatives.

Figure 17 shows a typical time-line representation of the activities during the Operational Initialization Phase.

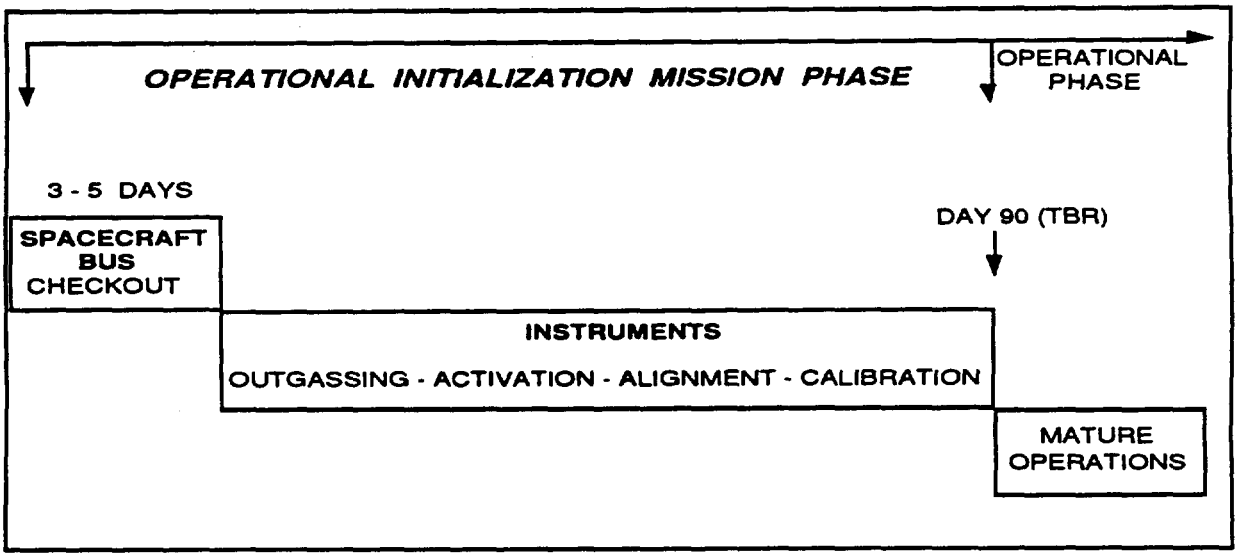

FIGURE 17 OPERATIONAL INITIALIZATION PHASE ACTIVITIES TIMELINE

4.1.8 Spacecraft Maneuver Operations

Throughout the EOS-AM mission, periodic orbit maintenance maneuvers are executed by the Spacecraft to maintain the operational (705 km) orbit requirements. The frequency of orbit adjusts is TBD. Each maneuver is planned and scheduled in advance of execution. Orbit maintenance maneuvers are not enabled without providing an opportunity for appropriate instrument reconfiguration, except in Spacecraft emergency situations. The Propulsion Subsystem provides impulse for orbit maintenance.

The Spacecraft is monitored by the Flight Dynamics Facility (FDF) through TDRSS ranging, and by the EOC, which uses TDRSS Onboard Navigation System (TONS) determinations. When required, orbit adjust calculations are performed to determine the direction and length of the burn, and the required start time. These calculations are used to generate stored commands. Upon completion of the burn, Spacecraft orbital parameters are monitored to determine the need for further correction. Figure 18 summarizes the steps described in paragraph 4.1.8

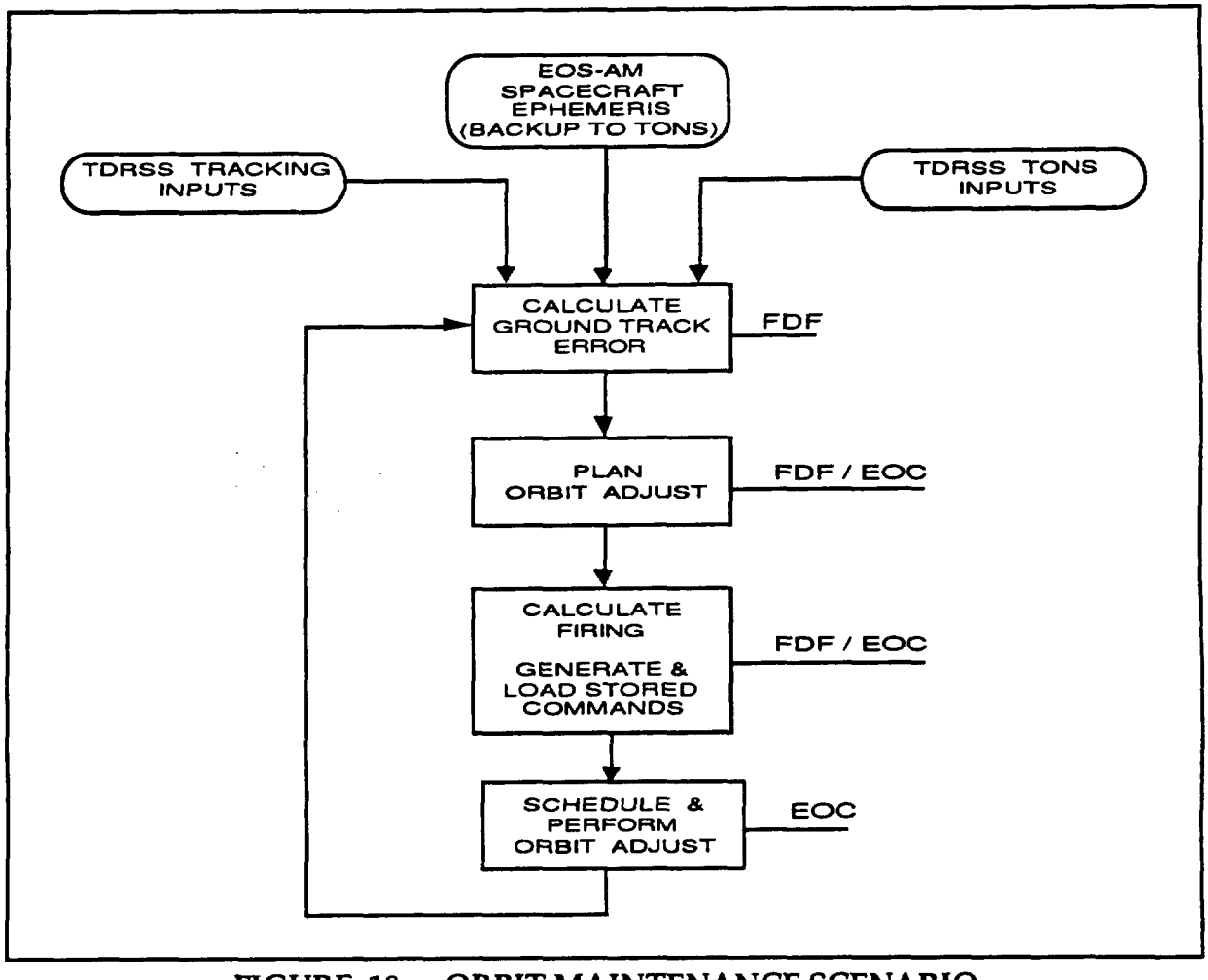

FIGURE 18 ORBIT MAINTENANCE SCENARIO

4.1.9 Autonomous Operations

The Spacecraft Fault Detection, Isolation and Recovery (FDIR) System protects the Spacecraft Bus and instruments in the event of survival-critical failures that occur in the absence of ground command and control. To accomplish this, the FDIR system autonomously switches the Spacecraft's configuration (equipment configuration and operating mode) in response to predefined survival-critical faults to isolate faults and prevent propagation. The FDIR system resides mostly in the SCC. This system provides autonomous action only if the fault detected is time critical to Spacecraft survival.

The major Spacecraft functions assessed by the on-board FDIR system requires a Flight Operations Team response in the event of function loss. The Flight Operations Team takes predefined actions in the event a FDIR event is detected.

The Spacecraft Safe Mode or Survival Mode is entered only after unsafe conditions or pending unsafe conditions are detected by the Flight Operations Team or the Spacecraft on-board FDIR system.

The Spacecraft may autonomously transfer into Safe Mode which may involve a degraded Spacecraft operation, and may also involve interruption of stored-command execution (only in the case of SCC or CTIU/C&T Bus loss).

Safe Mode or Survival Mode recovery occurs in predefined ground command / control steps only after detailed analysis and Spacecraft subsystems checkout and Operational Readiness verification.

4.1.10 Spacecraft Bus Operating Modes

The Spacecraft Bus operating modes are defined by the minimum functional and performance capabilities that are required to satisfy mission conditions and constraints.

Transition between a primary mode and a back-up mode is initiated by either Ground Command (stored or real-time) or on-board FDIR logic. The on-board Spacecraft Bus computer [SCC] autonomously initiates a transition from a primary mode (ie; Science Mode) to a back-up mode (ie; Survival Mode) following violation of preselected FDIR criteria. Exit from a back-up mode to a functionally more capable mode is by ground command only.

Figure 19 shows the Spacecraft operating modes available during each mission phase and their status (primary availability or back-up availability).

SPACECRAFT SYSTEM MODES	EOS-AM1 SPACECRAFT MISSION PHASES						
	Pre-Launch	Launch / Ascent	Orbit Acquisition Initialization	Orbit Acquisition	Operational Initialization	Operational	End of Mission
Ground Test Mode	P	B					
Launch/Ascent Mode		P	P				
Standby Mode			P	P	P	B	
Science Mode					P	P	
Delta-V Mode				P	P	P	
Survival Mode		B	B	B	B	B	P
Safe Mode		B	B	B	B	B	B

LEGEND
P = PRIMARY MODE
B = BACKUP MODE

FIGURE 19 SPACECRAFT OPERATING MODES AVAILABILITY

The Spacecraft Bus system operating modes are:

a. **Ground Test Mode.** -- The Ground Test Mode is a non-flight mode, used by the Launch Operations Team, in the Pre-Launch Phase following Spacecraft to Launch Vehicle integration. During the Ground Test Mode, the Spacecraft Bus undergoes comprehensive performance testing. Instrument science will not be tested during this mode but the integrity of instrument interfaces are verified. No deployments will be performed during the pre-launch tests.

   The Spacecraft is essentially in a check-out state receiving power from the Launch Vehicle T - minus zero umbilical, at the launch pad. The Spacecraft readiness for launch is established. The batteries are charged and equipment powered, as required, for low rate telemetry and commanding. Telemetry is provided to the Ground Support Equipment via the T - minus zero umbilical Spacecraft 1 kbps health and safety telemetry will be multiplexed with the Launch Vehicle telemetry and made available via the Launch Vehicle telemetry and antenna systems after Spacecraft disconnect from the T - minus zero umbilical. The software and data tables are loaded with the appropriate parameters for Orbit Acquisition Initialization and Orbit Acquisition Phase activities.

   The Ground Test Mode is entered by ground command. The Ground Test Mode is exited into the Launch/Ascent Mode for the Launch Phase upon the Spacecraft going to internal power.

b. **Launch/Ascent Mode** -- The Launch/Ascent Mode is a primary mode in both the Launch/Ascent and Orbit Acquisition Initialization Phases. The instruments are powered off with survival heaters enabled. Housekeeping equipment is powered as required for low-rate commanding and telemetry, with survival and operational heaters enabled.

The Flight Operations Team will monitor the Spacecraft telemetry received via the launch vehicle when it becomes available. No direct Flight Operations Team command/control involvement is necessary during the Launch and Ascent, assuming nominal Spacecraft conditions and activities.

Upon detection of separation from the launch vehicle, preprogrammed logic will be activated to perform major early mission activities, including:

- An attitude maneuver to obtain an Earth-oriented attitude
- Deployment of the solar array to support the bus load and begin battery recharge
- Establishment of an S–band command/telemetry link, primarily with TDRS via the omnis
- Deployment of the High Gain Antenna
- Enable the FDIR algorithms necessary for autonomous transition to Survival Mode or Safe Mode in the event of predefined failures. These algorithms will remain enabled throughout the subsequent mission phases.

Launch/Ascent preprogrammed activities will, as a backup, accept real-time ground commanded initiation, provided that a communication link with the ground has been established.

Nominally, exit from the Launch/Ascent Mode to Standby Mode will be ground commanded when the major early mission events (e.g. earth acquisition, energy balance, High Gain Antenna deployment) have been successfully completed. If an anomaly occurs after the Spacecraft has separated from the launch vehicle, the transition from the Launch/Ascent Mode to either the Survival Mode or Safe Mode may be commanded either by autonomous on-board logic or by ground command.

c. **Standby Mode** -- Standby Mode is used during Spacecraft subsystem checkout or as a back-up to the Science Mode. Although instrument science is not supported in this mode, instrument housekeeping functions can remain operational. Services provided during the Standby Mode include:

- Full power is provided. The Spacecraft Bus maintains a positive energy balance. The Spacecraft solar array tracks the sun.

- Thermal control is provided.

- Nominal S-Band Spacecraft Bus and instrument housekeeping (16 Kb) / health and safety (1 Kb) telemetry are provided.

- Commands are processed and distributed.

- Spacecraft housekeeping, health, and safety data storage and retrieval are operational.

- The SCC is operational including High Gain Antenna pointing and control.

- The Spacecraft Guidance and Navigation functions operate nominally, providing Earth-pointing (precision if transition is from Science Mode). The TONS system is operational with the Spacecraft ephemeris loaded as back-up.

d. **Science Mode** -- The Science Mode is the primary mode used during the Operational mission phase and during on-orbit instrument checkout. During Science Mode the Spacecraft Bus provides the full complement of resources. Services provided during the Science Mode include:

- Full power is provided. The spacecraft Bus maintains a positive energy balance. The solar array tracks the sun.

- S-Band Spacecraft Bus and instrument housekeeping / health and safety telemetry are provided.

- Science data transmission (real-time or playback) capability on the K-Band and Direct Access System are provided.

- Ancillary data and time-tagged navigational data functions are provided.

- Commands are processed and distributed.

- Spacecraft high rate and low rate data storage and retrieval are operational.

- The SCC is operational including High Gain Antenna pointing and control.

- The Spacecraft Guidance and Navigation functions operate nominally, providing precision Earth-pointing. The TONS system is operational with the Spacecraft ephemeris loaded as back-up.

e. **Delta-V Mode** -- The Delta-V Mode is a propulsive mode used to raise Spacecraft altitude from the injection orbit to mission operational altitude, circularize the mission orbit and to provide periodic correction to maintain the mission orbit. At a minimum, in the Delta-V Mode, the Spacecraft can be at survival power levels, and at a maximum, the Spacecraft can be at full power.

Best case: (such as planned Delta-V during the Operational Phase)

- Full power is provided.
- The spacecraft Bus maintains a positive energy balance.
- The solar array tracks the sun with nominal rotation.
- Science data transmission (real-time or playback) capability on the K-Band and Direct Access System could be provided; however, fine pointing and jitter control are not supported.
- Ancillary data and time-tagged navigational data functions are provided.
- Spacecraft high rate data storage and retrieval could be operational.

Worst case: (such as during the Orbit Acquisition Phase)

- Survival power (degraded capability).
- Commands are processed and distributed.
- S-Band Spacecraft Bus and instrument housekeeping / health and safety telemetry are provided.
- Spacecraft low rate data storage and retrieval are operational.
- The SCC is operational.
- The Spacecraft Guidance and Navigation functions operate providing Earth-pointing; however, fine pointing and jitter control are not supported. The TONS system is operational with the Spacecraft ephemeris loaded as back-up.

f. **Survival Mode** -- The Survival Mode is a minimal power or power critical mode in which only essential Spacecraft functions (i.e., low-rate commanding and telemetry, instrument survival heaters) are supported. Transition into the Survival Mode causes non-essential housekeeping equipment to power-down.

Instruments are commanded to take action to protect themselves and establish a minimal power configuration. The Survival Mode is the primary mode for the Launch/Ascent, Orbit Acquisition Initialization, Orbit Acquisition, and End of Mission Phases. Services provided during the Survival Mode include:

- The solar array tracks the sun.
- Commands are processed and distributed.
- S-Band Spacecraft Bus and instrument housekeeping / health and safety telemetry are provided.
- Spacecraft critical health and safety data storage and retrieval are operational.
- The SCC is operational. (Best case)
- The Spacecraft Guidance and Navigation functions operate nominally, providing Earth-pointing (best case). The TONS system is operational with the Spacecraft ephemeris loaded as back-up.

g. **Safe Mode** -- The Safe Mode is a state in which the Spacecraft Bus is capable of operating partially or completely independent of the SCC. Specifically, the Spacecraft Bus operates in the Safe Mode as long as the Attitude Control Electronics (ACE) performs the attitude control functions.

Safe Mode can be entered via ground command by the Flight Operations Team. Safe Mode is entered autonomously under two circumstances. The first is the loss of SCC - I'm OK - signal and the second is due to GN&C FDIR action. Autonomous Spacecraft entrance into the Safe Mode due to GN&C FDIR occurs if the GN&C FDIR detects an attitude error beyond a given threshold and attitude control is switched to the ACE. Services provided during the Safe Mode include:

Best case:

- Full power is provided The spacecraft Bus maintains a positive energy balance. The solar array tracks the sun with nominal rotation.

- Commands are processed and distributed.
- S-Band Spacecraft Bus and instrument housekeeping / health and safety telemetry are provided.
- Science data transmission (real-time or playback) capability on the K-Band and Direct Access System is provided.
- Ancillary data and time-tagged navigational data functions are provided.
- Spacecraft low rate and high rate data storage and retrieval are operational.
- The SCC is operational.
- The Spacecraft Guidance and Navigation functions operate safely Earth-pointing, with degraded pointing accuracy. The TONS system is operational with the Spacecraft ephemeris loaded as back-up.
- Earth Pointing

Worst case:

- Power for survival equipment and instruments
- No command / telemetry until the FOT re-establishes these functions [Command and Telemetry Interface Unit (CTIU) failure scenario].
- SCC non-functional. No SCC services.
- Sun pointing.
- Thruster based attitude control

4.1.11 Spacecraft Bus - Instrument Operating Modes Relationships

The Spacecraft Bus operating modes and MISR operating modes are directly interrelated. The Spacecraft Bus provides predefined services and resources for each of its operating modes. MISR operates to predefined tasks for each of its operating modes.

Table V relates MISR operating modes and the Spacecraft Bus operating modes.

TABLE V
SPACECRAFT BUS AND MISR OPERATING MODES

SPACECRAFT SYSTEM MODE	MISR INSTRUMENT MODE								
	Off	Test	Survival	Safe	Standby	Global	Local	Dark	Calibration
Ground Test	X								
Launch/Ascent	X	TBD							
Standby					X				
Science					X	X	X	X	X
Delta-V									
Survival	X		X						
Safe				X					

LEGEND

X = Normal Configuration

4.2 Ground System

The EOS ground system provides the earth sciences community with a variety of data products obtained from the Earth Observing System spacecrafts. Data archiving, distribution and user interface capabilities are provided. The ground system also supports the command and control of the EOS-AM Spacecraft.

EOS-AM flight operations utilizes several NASA institutional support facilities along with dedicated EOS facilities. These include the following:

4.2.1 Space Network

The Space Network (SN) is the primary data transport system for relaying data between the EOS-AM Spacecraft and the ground, and provides communication resource scheduling support to EOSDIS. The SN elements together provide the communications path between the Spacecraft communications subsystem and the EOS Data and Operations System (EDOS). The SN has two parts:

a. **The Tracking and Data Relay Satellite System (TDRSS).** TDRSS comprises the Tracking and Data Relay Satellites [TDRS(s)], the White Sands Ground Terminal (WSGT), and the Second TDRS Ground Terminal (STGT), also located at White Sands.

b. **The Network Control Center (NCC) at the Goddard Space Flight Center (GSFC).** The NCC is the operations center for all SN activities. It provides operational management of all elements of the SN and is responsible for all scheduling activities for the TDRS(s) and ground terminals. The EOC interfaces with NCC for scheduling SN resources. The NCC implements operations, executes schedules, and performs link monitoring and fault isolation.

Figure 20 depicts a top level view of the Space Network scheduling process.

The nominal plan for TDRSS support calls for two contacts 10 minutes in length, per EOS-AM orbit. The requirement for support is submitted with the specific timing of support services left to be scheduled by the NCC. A forecast schedule of TDRSS support intervals is released by the NCC approximately one-two weeks beforehand. Contingency/emergency support arrangements can be made with 10 minutes advance notice.

Figure 21 shows a timeline of Space Network and EOC scheduling activities during a normal forecast scheduling period and an active scheduling period.

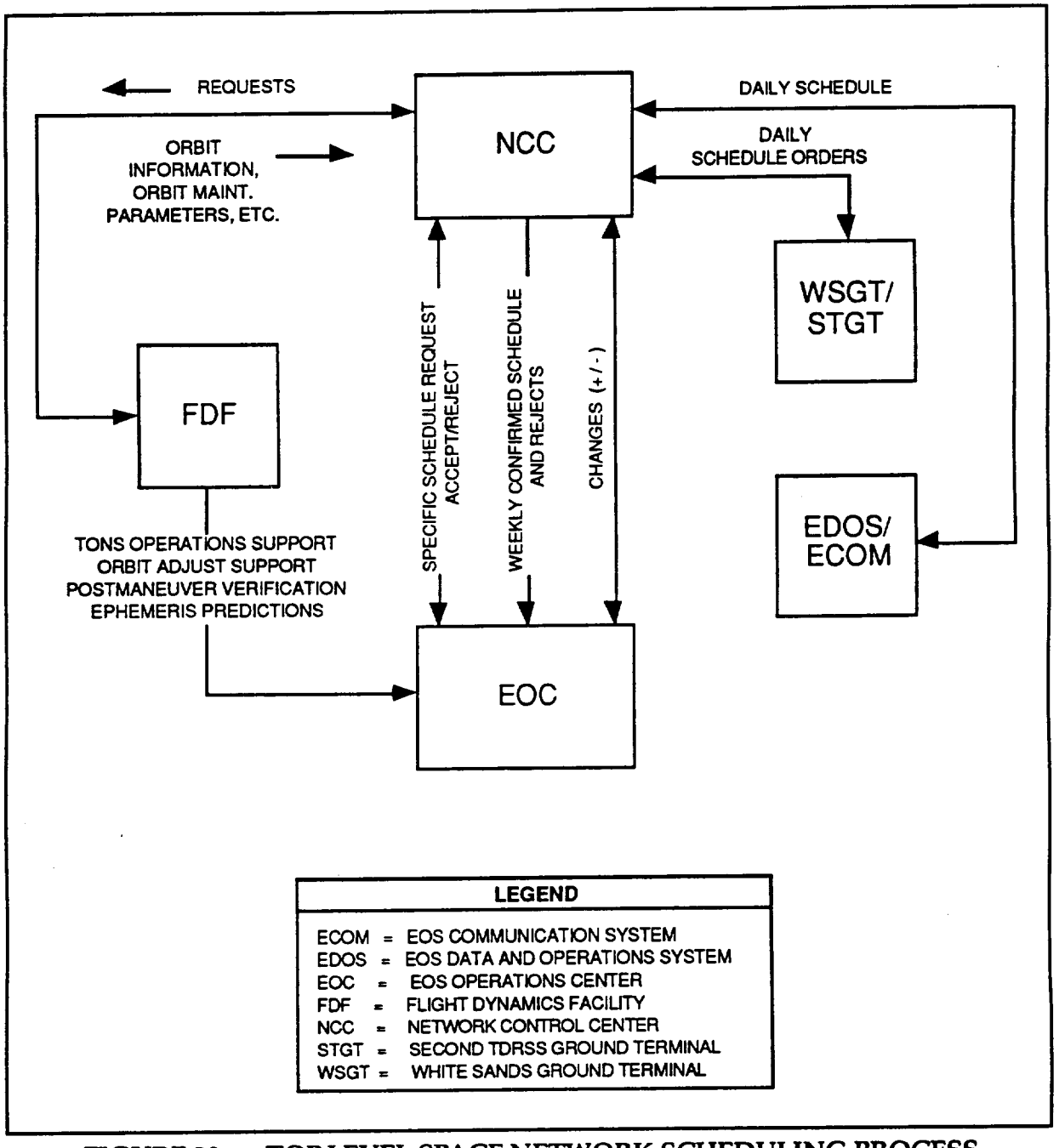

FIGURE 20 TOP LEVEL SPACE NETWORK SCHEDULING PROCESS

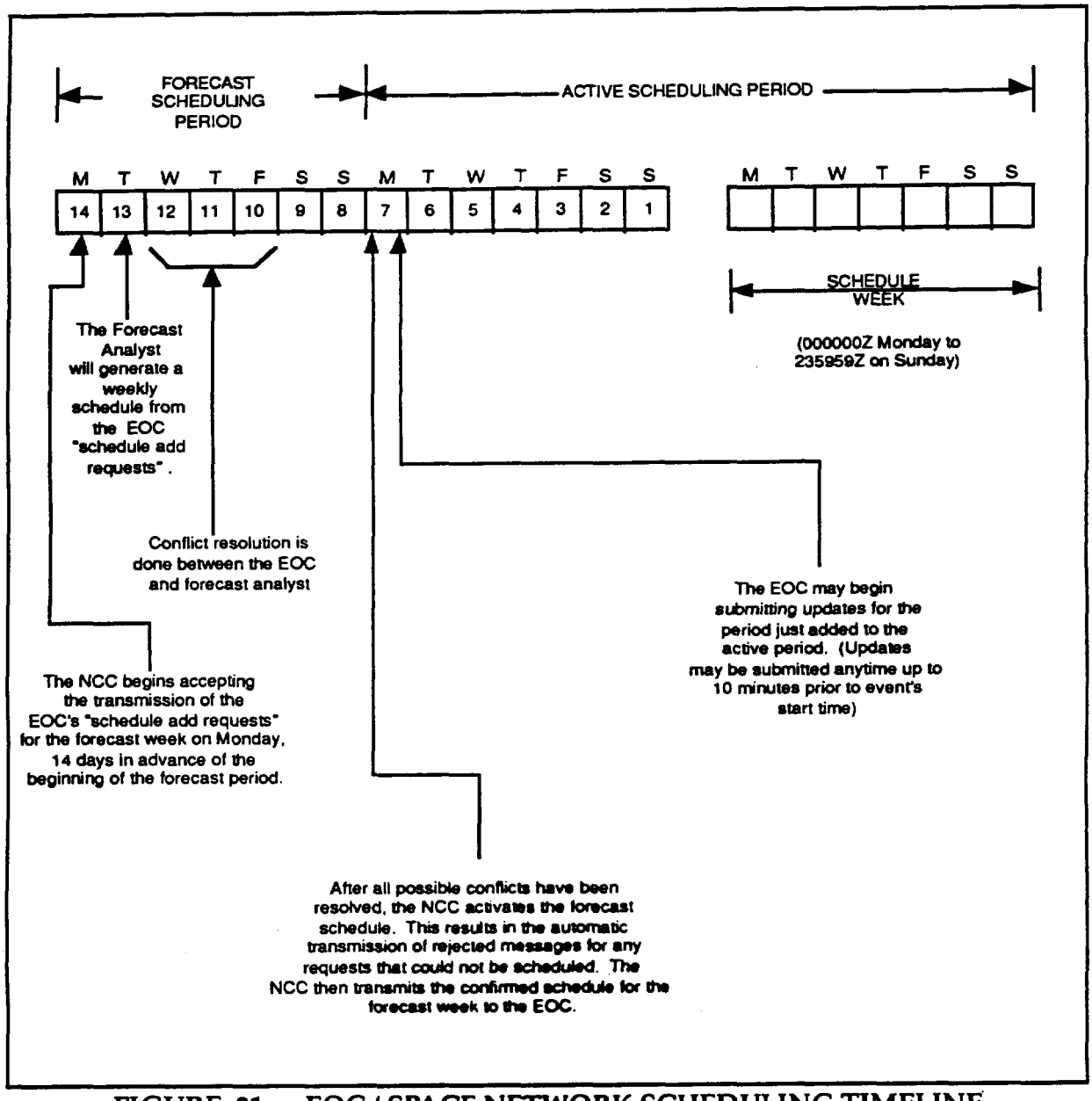

FIGURE 21 EOC / SPACE NETWORK SCHEDULING TIMELINE

4.2.2 Flight Dynamics Facility

The Flight Dynamics Facility (FDF) is an institutional facility located at GSFC that provides orbit, attitude, and navigation computational services in support of flight projects. Prelaunch services include mission design analysis, trajectory analysis, sensor analysis, and operations planning. Operational support services include orbit and attitude determination, anomaly resolution, orbit adjustment planning and maneuver support, sensor calibration, post mission velocity analysis, and generation of planning and scheduling data products.

The FDF provides operational support to the EOS-AM Spacecraft. The FDF interacts directly with the EOC to provide TONS operations support, orbit adjustment support, and post maneuver verification of spacecraft parameters. In addition, FDF provides the EOC with TDRS and EOS-AM Spacecraft ephemeris loads and predictions for planning and scheduling support.

The FDF routinely provides predicted orbit information for use in flight operations and definitive data for scientific data processing (when requested). The FDF generates planning aid data to support both long and short term operational planning activities and for use in command generation processing. Performance monitoring data is extracted from planning aid data sets, or generated separately; this data is provided to the EOC for use in verifying proper Spacecraft operation during real-time contact intervals. The FDF operates seven days per week to generate predictive orbit data for use in daily command generation processing. The short-term planning aid data used in daily planning activities is generated/updated TBD, while long term planning aid generation is scheduled to support specific long term planning activities whenever they occur.

4.2.3 NASA Communication Network

Together with the EOS Communications Network (ECOM) (Section 4.2.6.2), NASA Communication Network (NASCOM) provides the set of circuits, switching, and terminal facilities for operational telecommunications support of the EOS project. Both networks provide a high level of security for the command, telemetry, and other information directly related to the spacecraft operations that they support. NASCOM provides the communications between the Earth Science Data Information System (ESDIS) and the NCC (and possibly other institutional systems), either directly or via ECOM gateways.

4.2.4 Science Support Networks

Other NASA networks that support EOS science communications include the Program Support Communications Network (PSCN) and the NASA Science Internet (NSI):

a. The PSCN provides programmatic and administrative data communication services between NASA Headquarters, NASA centers, and other users. The PSCN Control Center, located at Marshall Space Flight Center (MSFC), has overall responsibility for scheduling, software development, maintenance, and monitoring of the PSCN.

b. The NSI is a multi-discipline and multi-project network that is operated by the NSI Project Office at NASA's Ames Research Center (ARC). NSI provides data access and interchange among a wide variety of NASA science

disciplines. It provides direct user access to several disciplines supported by ESDIS and gateways to other networks that will be part of the ESDIS Science Network (ESN).

4.2.5 Alternate Space/Ground Links

In the event that the Spacecraft is unable to communicate through TDRSS, NASA ground stations link the Spacecraft with the EOC for housekeeping and health and safety data. The ground stations include the following:

a. Deep Space Network (DSN).
b. Ground Network (GN).
c. Wallops Orbital Tracking Station (WOTS).

4.2.6 Earth Observing System Data and Information System

The Earth Observing System Data and Information System (EOSDIS) ground system consists of EDOS, ECOM, and ECS.

4.2.6.1 EOS Data and Operations System

The EOS Data and Operations System (EDOS) is a component of the EOS Ground System which provides an interface between the White Sands Ground Terminals and other EOS Ground Systems like the EOC, ASTER Instrument Control Center (ICC), and the DAACs. The interface between EDOS and the DSN, GN, WOTS, and Direct Playback stations is TBD.

EDOS processes data which conforms to the CCSDS recommendations.

For telecommand services, EDOS provides an asynchronous interface with the EOC, while providing a synchronous interface with the White Sands Ground Terminal. EDOS receives CCSDS Command Link Transmission Units (CLTUs) from the EOC and provides the CCSDS protocol for transmission of the data to the White Sands Ground Terminals.

For telemetry services, EDOS provides several data processing functions:

a) For data requiring real-time transmission (i.e., real-time housekeeping data to the EOC), EDOS extracts packets from the S-band downlink and transmits the packets with a minimum of delay at the rate received. In addition, EDOS provides a time tagging function which will allow for accurate spacecraft time determination.

b) EOS-AM data transmitted via the high-rate science link (i.e., the K-band link), undergoes level zero production data processing at EDOS. Playback data is forward ordered if necessary, and data sets are generated which contain time ordered packets (all with the same APID) with quality and accounting information appended. The size of the data sets generated is predetermined, so one data set may contain data from one or more TDRSS contacts. Overlap between TDRSS contacts is eliminated where it occurs.

   Level zero processed data sets are available for delivery to destinations within 21 hours of receipt of all the required data.

c) Up to 5% of the total data generated by the spacecraft may receive quick-look processing at EDOS. Quick-look processing is a means of delivering science/engineering data to a destination within approximately one hour of its receipt at EDOS. Any data included in a quick-look processed data set is also included in a routine level zero production processed data set. Quick-look processed data sets are limited to data received during a single TDRSS contact. The data in a quick-look processed data set may include all of the data associated with the specified APID received during the TDRSS session or only those packets for the specified APID that have a special secondary header flag set (quick look flag).

d) Another EDOS processing option is rate buffering. This option is intended to capture downlink data at a high data rate and deliver that data to a destination at a different, lower data rate with minimal processing delays.

   Rate buffered data sets are files of packets for a single APID with limited quality and accounting information appended.

EDOS provides an interface to the EOC, ICC, and DAACs for realtime spacecraft monitoring, data accounting, fault isolation, and configuration management.

4.2.6.2 EOS Communication Network

The EOS Communication Network (ECOM) is a facility system that supplies supporting services to EOSDIS. ECOM provides the set of circuits, switching, and terminal facilities for operational telecommunications support specific to the EOS project. Together with NASCOM, ECOM provides a high level of security for the command, telemetry, and other information directly related to the Spacecraft operations. ECOM provides the data transport path from the EDOS elements to various other elements of EOSDIS, including the EOC and ASTER ICC. ECOM supports a variety of bandwidths and uses state-of-the art communications methods, including fiber optics and domestic communications satellites.

4.2.6.3 EOSDIS Core System

The EOSDIS Core System (ECS) has the following three segments:

a. The Flight Operations Segment.
b. The Science Data Processing Segment.
c. The Communication and System Management Segment.

4.2.6.3.1 Flight Operations Segment

The Flight Operations Segment (FOS) manages and controls the EOS-AM Spacecraft and its instruments.

The FOS comprises the following three basic elements:

a. The EOS Operations Center

The EOS Operations Center (EOC) facility serves as the focal point for EOS-AM Spacecraft real-time flight operations. The EOC will be located at GSFC. Figure 22 shows the EOC staffing structure and relationships with other EOS-AM Project related entities.

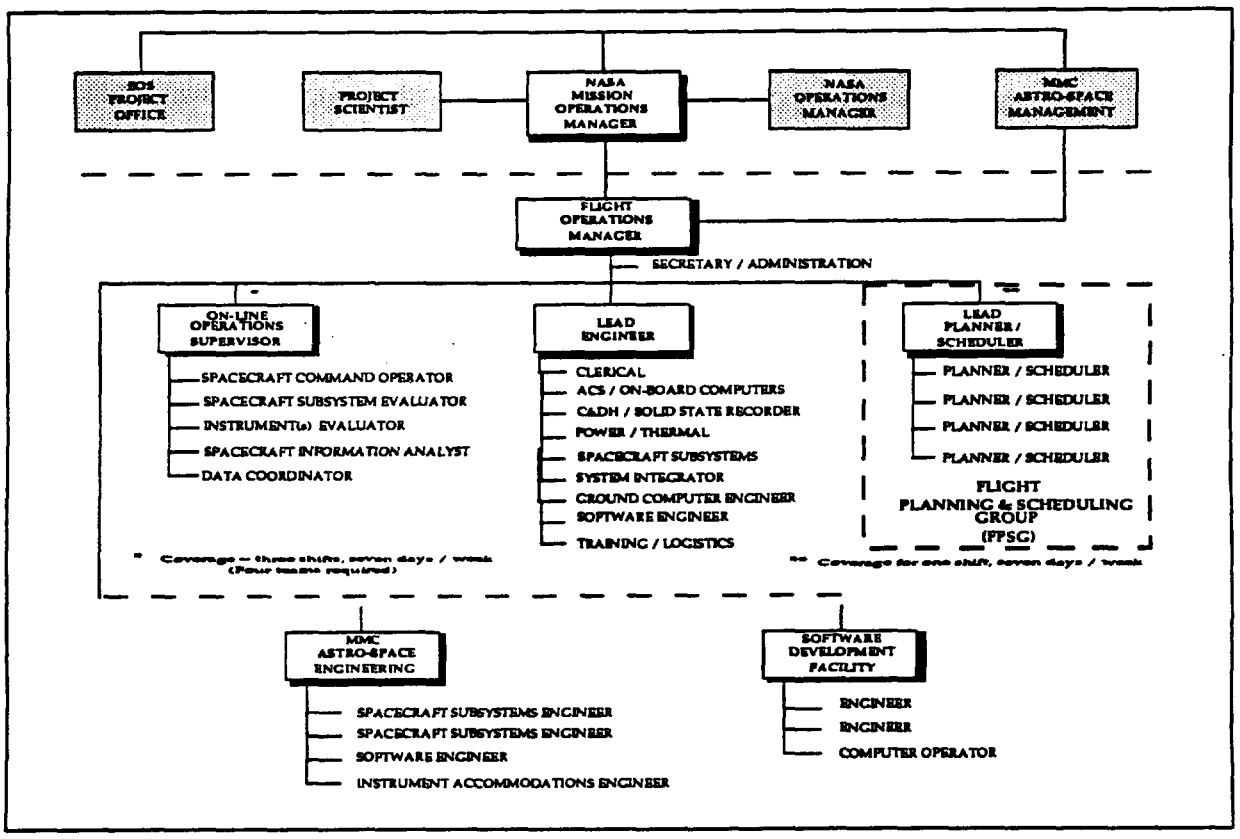

FIGURE 22 EOC STAFFING STRUCTURE

The flight operations elements responsible for the health and safety of the Spacecraft are located at the EOC. The FOT performs the detailed flight operations planning and scheduling, command, control, and real-time monitoring of the Spacecraft. The spacecraft engineering group, located at the EOC, is responsible for detailed Spacecraft performance analysis and produces periodic spacecraft subsystem performance reports.

Housekeeping, engineering, and instrument quick-look processed science data are also analyzed to support flight operations and to support Spacecraft and instrument engineering.

The FOT coordinates MISR operations with the Spacecraft and other instruments. Working with the MISR PI via the Instrument Support

Terminal(s), the FOT plans and schedules the MISR and Spacecraft operations.

The EOS-AM spacecraft contractor provides a spacecraft simulator, which is a hybrid of the Spacecraft Bus Command and Data Handling (C&DH) subsystem and special simulation software. This simulator supports ground tests and training. The simulator will be located at the EOC.

Specific EOC command and telemetry database requirements for the MISR instrument are defined in Appendix II and Appendix III, respectively.

Specific requirements for EOC computer processing of MISR telemetry data are defined in Appendix III.

Specific requirements for MISR uplink transmissions are defined in Appendix II, while MISR uplink verification requirements are included within Appendix III.

b. The Instrument Control Center

There is no Instrument Control Center (ICC) for MISR.

c. Instrument Support Terminal

The Instrument Support Terminal (IST) software will be hosted on a MISR Principal Investigator (PI) Science Computing Facility (SCF) computer. The MISR IST provides access to EOC based information and functions. It also provides for the exchange of data between the EOC and other instrument support systems at PI/TL or instrument team locations.

One or more ISTs (TBD) may be available to enable the MISR PI to participate in the planning, scheduling, commanding, and monitoring of the MISR instrument. The procedures for these interfaces are TBD and are furnished by the ECS contractor.

Figure 23 shows the MISR IST user perspective.

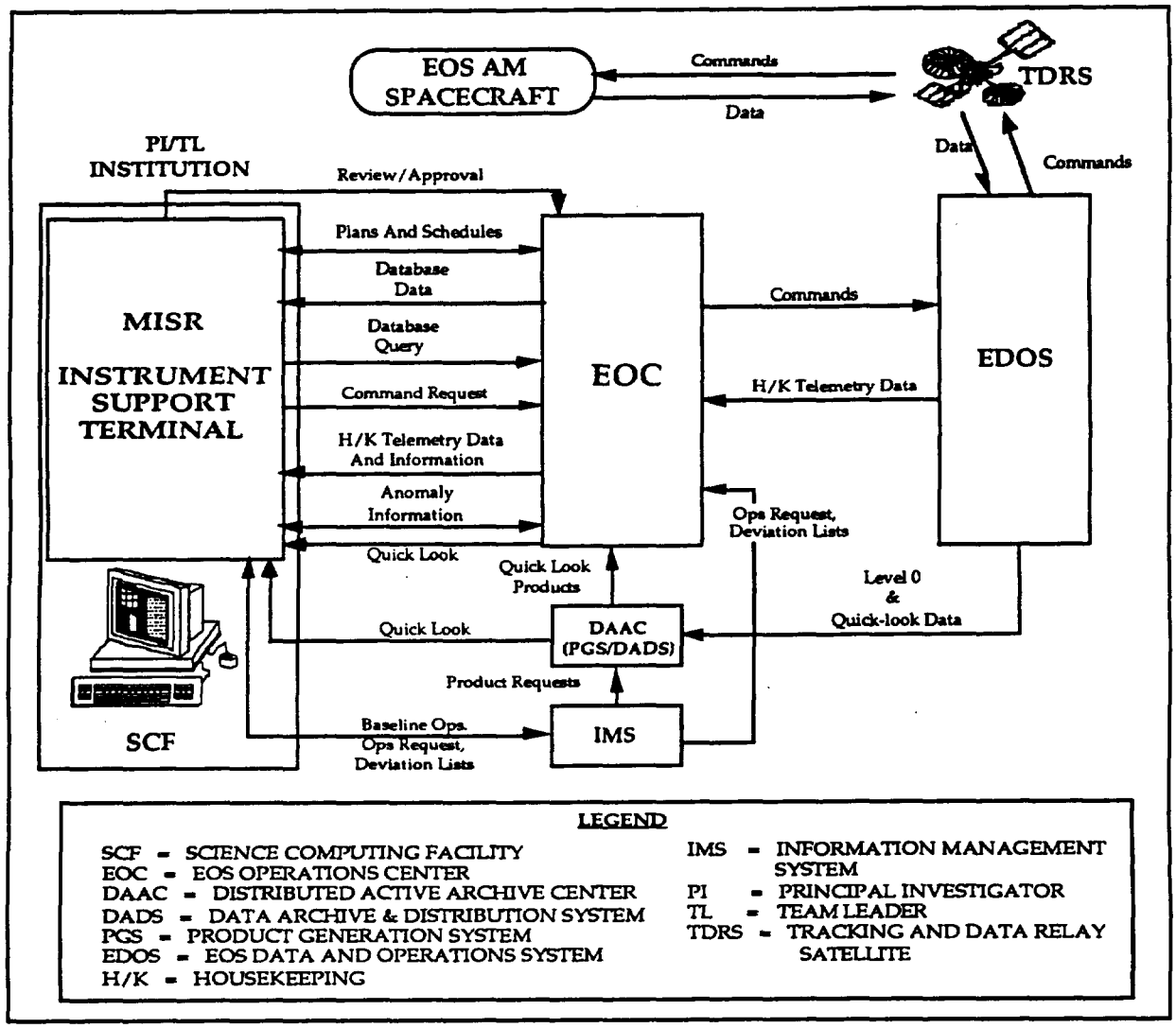

FIGURE 23 MISR IST USER PERSPECTIVE

The MISR IST provides for the exchange of data with the EOC. Other instrument support systems at the MISR PI location (e.g., for transfer of instrument microprocessor loads and dumps) also utilize the IST. Different authorized individuals may use the IST to perform different functions in support of MISR operations (e.g., some IST users may support planning and scheduling; others, anomaly resolution).

During the ECS development phase, the PI and the Earth Science Data

Information System (ESDIS) project will negotiate the allocation of instrument operations functions to the MISR IST.

The ISTs run on a wide range of computer platforms that conform to industry standards. The MISR PI is responsible for ensuring that the hardware that hosts the IST meets these standards and for integrating the toolkit with the hardware and other PI applications.

4.2.6.3.2 Science Data Processing Segment

The Science Data Processing Segment (SDPS) provides processing and distribution for science data and a data information system for EOSDIS. It consists of the following three kinds of elements:

a. The Distributed Active Archive Centers (DAACs) -- The DAACs will process data from the instruments to standard level 1-4 products, provide short- and long-term storage for EOS and selected non-EOS data, and distribute the data to users. Each is composed of a Product Generation System (PGS), a Data Archive and Distribution System (DADS), and a portion of the distributed Information Management System. Several DAACs are distributed around the United States.

b. The Information Management System (IMS) -- The IMS is a distributed data and information management service that includes a catalog system in support of user data selection and ordering. The IMS is distributed but will function as a single integrated information and data management service from the point of view of the user. The IMS therefore presents the same comprehensive view of the EOSDIS from any IMS access node.

c. The Science Computing Facilities (SCFs) -- SCFs are located at science investigator sites and are used to develop and maintain algorithms, produce data sets, validate data and data products, and analyze and synthesize EOS and other data to expand knowledge about the Earth system and its components. The ISTs are loaded into the SCF.

The SDPS performs the EOSDIS functions of processing and archiving data from the EOS instruments and data from other earth science projects.

4.2.6.3.3 Communication and System Management Segment

The Communication and System Management Segment (CSMS) provides communications, networking, system-wide network management, and site/element operations management. This segment contains the following two elements:

a. The System Management Center (SMC) -- A system management service for EOSDIS ground system resources.

b. The EOSDIS Science Network (ESN) -- A communications network and services providing for the electronic distribution of data among the DAACs, SCFs, and other related science facilities.

The CSMS performs the EOSDIS functions of providing access to and distribution of EOS data products, networking capabilities, and the exchange of items such as data and algorithms.

5 FUNCTIONAL RESPONSIBILITY ALLOCATIONS

This section enumerates the functions to be performed during the development, implementation, and execution of MISR flight operations, and allocates responsibility to the appropriate entity.

This section is still in work with several remaining issues to be worked at the time of this release. The MISR instrument team's revisions, and additions have been included and are to be reviewed with GSFC.

The allocations of responsibility for performing various operational functions in support of MISR flight operations are understood to be as follows:

5.1 Planning and Scheduling

Planning and scheduling has the objective of producing a detailed schedule for the activities of the EOS-AM Spacecraft (Spacecraft Bus and AM Instrument Set). The Flight Planning and Scheduling Group (FPSG), a segment of the FOT, is responsible for producing the integrated Spacecraft detailed activity schedule.

The planning and scheduling process includes the following three steps:

a. **A long-term mission planning phase.**
Long-term mission planning for the Spacecraft begins up to 5 years before the activities being planned and produces or updates the Long-Term Science Plan (LTSP) and Long-Term Instrument Plans (LTIPs).

b. **An initial scheduling phase.**
Initial scheduling, whose primary objective is to secure the SN resources for flight operations for the target week, begins about 3 weeks before the target week and uses baseline activity profiles, activity lists and/or activity deviation lists.

c. **A final scheduling phase.**
Final scheduling, which begins after the instrument and Spacecraft subsystem activity lists are generated, produces a detailed activity schedule for the Spacecraft Bus and the instruments. This schedule forms a basis for commanding the Spacecraft.

The science community and the FOT will integrate science and Spacecraft information in the planning and scheduling process.

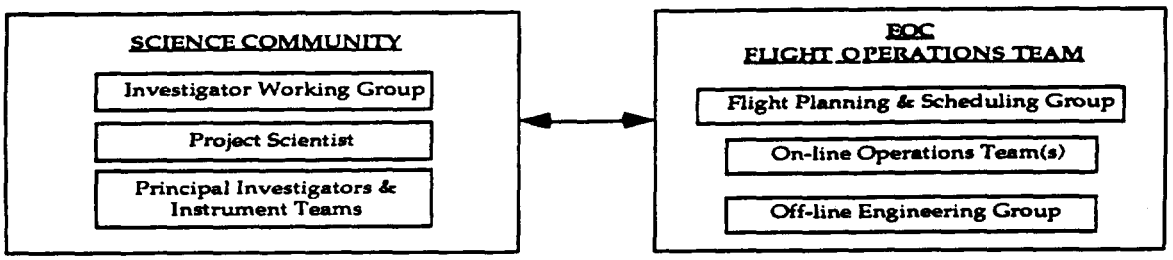

5.1.1 Long Term Planning

The project scientist produces, with the Investigator Working Group (IWG) recommendations, a LTSP for the Spacecraft. The PIs/TLs produce LTIPs for their respective instruments. The FOT uses these long-term plans to develop a long-term Spacecraft operations plan.

The IWG recommends guidelines and overall science objectives to the Project Scientist, who defines policy. The IWG has representatives from each of the instruments. The IWG meets regularly, at least every 6 months (usually every three months). The LTSP presents science objectives for the Spacecraft establishes science mission priorities to be used in later scheduling, and recommends approaches for satisfying scientific objectives. The LTSP also defines special events and specifies requirements for coordination between instruments.

The MISR PI creates and has responsibility for LTIP for MISR in accordance with the IWG science recommendations and the LTSP. The LTIP is created once a year, and updated quarterly. The LTIP contains planned routine background operations (e.g. Global Mode and repetitive Local Mode) for ongoing observations or operations that are related to routine calibration and maintenance activities.

The FPSG has the responsibility for Spacecraft planning. Some of the Spacecraft Bus subsystem activities that the FPSG manages are directly related to science and to Spacecraft Bus subsystem operations; these include the power, command and data handling, and communications subsystems. Others support Spacecraft maintenance, including battery management and orbit maintenance. The FPSG formulates long-term spacecraft operations plans. The FPSG keeps the MISR PI informed of changes in spacecraft operations, including predicted frequencies in which science operations are affected for maintenance. (These include orbit maintenance Delta V modes, shuttle-EOS-AM TDRS conflicts, and TBD).

Special joint observation requests from other instrument PIs or from interdisciplinary scientists may be requested directly of the MISR PI, and/or scheduled in the IWG Science Plan if known far enough in advance. There will occur during the mission some "vicarious calibrations". These are joint observations of the MISR instrument coordinated with ground and or airflight observations. See the Appendix for details and requirements (currently TBD).

5.1.2 Initial Scheduling

Initial scheduling has the objectives of securing the required SN resources from the NCC. The FPSG identifies the SN resources required for Spacecraft Bus subsystem operations (e.g., TONS operations, orbit adjustment operations). Based on the baseline activity profiles, instrument activity lists, and activity deviation lists (if any) for the instruments, and the SN resource needs for the Spacecraft Bus subsystems, the EOC estimates on-board Solid State Recorder usage and SN resource needs and develops a TDRSS schedule request. The FPSG sends the schedule request to the NCC and negotiates with the NCC as necessary to secure the best possible SN resource allocations.

On the basis of the TDRSS schedule, the Spacecraft Bus activities required and instrument activities, the FPSG develops a preliminary Spacecraft activity schedule, which it makes available to all instruments. The MISR PI has access to available scheduling information via the IST. This global information includes the plans (e.g., LTSP, LTIPs, and long-term Spacecraft operations plan), orbit information (e.g., scheduling aids from the FDF), a TDRSS schedule for the target week, and the most current preliminary Spacecraft activity schedule.

The MISR PI expresses changes of scheduling needs with operations requests, which contain activity deviation lists, and provides them to the FPSG. The MISR PI acknowledges the "no change to operating instructions" by the use of TBD provided to the FPSG on a TBD schedule.

The Spacecraft Bus subsystems undergo initial scheduling. From the long-term Spacecraft operations plan, the FPSG identifies the activities that the subsystems must perform during the target week. Based on these activities, the FPSG generates an initial activity profile. The FPSG uses the activity profile to identify the Spacecraft Bus subsystems' SN resource needs.

After validation of the activity profile, the FPSG generates a TDRSS schedule request and sends it to the NCC, about 2 weeks before the target week. For about a week after the submission of this TDRSS schedule request, the FPSG can negotiate with the NCC for the best SN resource allocations. A week before the target week, the NCC provides the active TDRSS schedule to the FPSG. Based on the TDRSS schedule and other resource profiles, the FPSG builds a preliminary Spacecraft activity schedule for the target week.

5.1.3 Daily Planning and Scheduling

The FPSG is responsible for overall coordination of daily Spacecraft operations planning and scheduling activities. The MISR PI is responsible for reviewing the daily Spacecraft operations plan.

Final scheduling has the objective of producing for the Spacecraft a detailed activity schedule on which commanding will be based. Final scheduling is based on the preliminary activity schedule and any new input that has been accepted since the preliminary activity schedule was developed.

The FPSG combines the activity deviation lists, if any, with the corresponding baseline activity profiles to produce instrument activity lists. The FPSG develops the Spacecraft subsystem activity lists. Based on the instrument and Spacecraft subsystem activity lists the FPSG, using EOC resources, generates a detailed activity schedule for the Spacecraft. The FPSG can normally perform final scheduling without any input from the MISR IST.

As in initial scheduling, the MISR PI can access scheduling information using the IST.

Scheduling conflict resolution is TBD.

5.1.4 Planning Aids

Planning aids which pertain to long-term and daily flight planning activities are generated by the EOSDIS and FDF, and are available to the MISR PI.

The planning aid details are given in Appendix V. Access details are TBD and are the responsibility of the EOSDIS Core Systems Contractor.

5.2 Uplink Generation

The uplink generation process translates the Spacecraft detailed activity schedule, instrument microprocessor loads, and other information to be stored into Spacecraft command loads ready for uplink transmission. This process will be performed using TBD procedures. The MISR PI is responsible for generating all MISR control sequences which are used to implement planned instrument operations. The FPSG is responsible for generating control sequences which are used to implement planned Spacecraft Bus operations. The MISR PI is responsible for ensuring that the MISR commands in the command database are current and correct.

The MISR PI is responsible for defining MISR constraint checks, constraint violation resolution ground rules, and for performing checks on MISR microprocessor load sequences. Specific constraint check requirements for MISR are defined in Appendix II.

The FPSG is responsible for coordinating the processing of Spacecraft and instrument operating schedules into uplink loads. The primary point of contact between the MISR PI and the Flight Operations Team is TBD.

Spacecraft commanding (real-time uplink commands, realtime microprocessor loads to the instruments, real-time commands to the SCC, and stored SCC commands) has the purpose of directing the spacecraft and instruments to perform the activities as scheduled or as needed. This function has the following three major activities:

a. Normal commanding, which implements the Spacecraft Bus and instrument activities that have been specified in the Spacecraft detailed activity schedule.

b. Implementation of late changes to the scheduled course of activities as necessitated by late changes to the Spacecraft detailed activity schedule.

c. Emergency/contingency commanding required for safe operations of the Spacecraft Bus and instruments.

Command associated activities also involve command data validation, command verification, onboard memory management, and command history maintenance.

Stored SCC commands generated for MISR are typically composed of absolute time commands. An absolute time command has associated with it a well-defined execution time.

The assignment of command related responsibilities for MISR to the PI and the FOT is TBD. The FOT uplinks commands for MISR as specified by TBD approved plans and activities.

The FOT is responsible for uplinking scheduled MISR command loads. The PI may also request the FOT to initiate real-time commands. The FOT is responsible for generating, validating, deconflicting, and maintaining the command data for the Spacecraft Bus subsystems. The SCC software is the responsibility of the Spacecraft Bus contractor. The FDF provides the FPSG with required parameters for TONS operations and orbit adjustment operations. The FPSG incorporates the appropriate parameters into SCC-stored commands and SCC-stored Spacecraft tables.

5.3 Real-Time Operations

The Flight Operations Team is responsible for all aspects of real-time contact with the Spacecraft. The ECS contractor, using EOC resources, is responsible for processing real-time telemetry data to:

a. Determine the status of various Spacecraft systems.

b. Monitor the health and safety of Spacecraft Bus subsystems and each EOS-AM instrument.
c. Generate displays for use by the FOT.

The EOSDIS Core System contractor is responsible for IST display generation. The method and implementation are TBD.

The FOT is also responsible for generating and transmitting all real-time commands, for transmitting the stored command loads, and for verifying all uplink transmissions. Specific uplink verification requirements for MISR are defined in Appendix III.

The FOT is responsible for implementing the daily Spacecraft operations schedule under normal circumstances, and for taking appropriate action to preserve Spacecraft health and safety. The MISR PI is responsible for defining health and safety monitoring and reaction procedures for MISR, and the Flight Operations Team is responsible for implementing these procedures. Specific MISR health and safety monitoring and action requirements are defined in Appendix III and Appendix IV, respectively.

The MISR PI is also responsible for advising the FOT of any changes in MISR operating characteristics, capability, or in plans for MISR utilization which should be factored into any aspect of real-time operations. The FOT is responsible for advising the MISR PI (directly, or indirectly via the FPSG) of any departure from planned operation of MISR.

5.4 Performance Verification

Verification of operational performance is required for all Spacecraft Bus subsystems and MISR in order to maintain an up-to-date knowledge of Spacecraft operating characteristics, capabilities, and limitations. Performance verification results will be used in science data analysis/evaluation and as an input to ongoing science and operational planning activities. The MISR PI is responsible for verifying all aspects of MISR instrument performance, and the FOT is responsible for verifying the performance of Spacecraft Bus subsystems throughout the Spacecraft mission. The SDF at the Spacecraft contractor's facility supports the FOT in verifying Spacecraft Bus flight software performance relating to on-board operation. The MISR PI is responsible for MISR performance verification requirements. The FOT and MISR PI are both responsible for advising the EOS-AM Science Team all/any performance verification results which are pertinent to the planning of future mission operations.

The FOT is responsible for maintaining a log of all uplink activities, which includes for each uplink activity the command data uplinked, the start and end times, and its receipt by the C&DH. The FOT, using EOC resources, also maintains information

on whether stored command data are correctly stored in the SCC memory and information on whether the SCC-stored commands are dispatched successfully to the intended destination entities. For real-time commands, the FOT maintains information regarding command execution by the Spacecraft Bus subsystems. The FOT will verify MISR microprocessor loads via checksum or TBD method.

Similarly, the MISR PI is responsible for maintaining information on whether the stored or real-time instrument commands are successfully executed by MISR (Details are TBD). The MISR PI is also responsible for maintaining information on whether the instrument microprocessor loads are correctly loaded and executed (Details are TBD).

Command histories are maintained by the FOT and MISR PI.

5.5 Database and Software Maintenance

The Spacecraft SCC and MISR instrument microprocessor will contain software and database information which are subject to in-orbit maintenance. The EOC computer systems contain a database which supports command generation, telemetry processing operations; and all ground system elements contain software subject to maintenance. The configuration of each software system and database are controlled with update procedures coordinated to maintain consistency between the EOS-AM Spacecraft and ground system and between various ground system facilities.

The FOT has overall responsibility for coordinating software and database maintenance activities to insure system-wide consistency. The Software Development Facility (SDF) has responsibility for the Spacecraft Bus flight software.

The FOT is responsible for defining and verifying variable-parameter modifications for the allocation of command storage memory within the SCC, and for implementing SCC flight software and database modifications. The MISR PI is responsible for maintaining all MISR instrument microprocessor software and database contents for MISR.

The FOT is responsible for maintaining all Spacecraft Bus subsystem parameters within each ground system database and for maintaining the core definitions of all individual commands within the EOC systems. The FOT is also responsible for maintaining the core definition of all downlink telemetry functions within the EOC database for which EOC processing of any type is required. The MISR PI is responsible for providing to the EOC the parameter values which define all MISR commands and telemetry functions (e.g., serial magnitude commands having specific bit patterns or variable sub-fields; telemetry functions contained within an instrument-controlled format structure). The MISR PI is responsible for defining

all other ground system database information updates which relate to MISR (i.e., command sequences, constraints, verification procedures; activity definitions; telemetry calibration data, limit-check threshold levels, derived function definitions, display formats).

The ESDIS Project is responsible for the maintenance of Code 500-supplied ground system software, and the EOSDIS Core System contractor for implementing the associated database modifications. The FOT is required to remain cognizant of database content and status within the EOC. The FOT interacts with the MISR PI to implement any database updates which are pertinent to MISR. The ECS contractor provides the database manager software for the EOC database.

5.6 Early Orbit Operations

The early orbit operations responsibility for performing various operational functions in support of MISR flight operations are understood to be as follows:

5.6.1 Launch - Orbit Acquisition Mission Phases

The MISR PI is responsible for defining any command sequences, EOC displays, and contingency procedures which should be available during launch through the Orbit Acquisition mission phase operations in order to assure the health and safety of MISR. Specific MISR requirements for pre-activation attention are defined in Appendix IV.

The launch vehicle places the Spacecraft in the injection orbit; and the Spacecraft senses separation (Spacecraft from launch vehicle). Data is relayed from the Advanced Range Instrumented Aircraft (ARIA) to the EOS Operations Center. Figure 24 shows the Launch / Ascent phase timeline.

The FOT is responsible for the following activities:

a. Monitor Spacecraft Bus housekeeping telemetry (Launch / Ascent specific display sets).

b. Monitor and verify Spacecraft Bus operating mode.

c. Monitor and verify Spacecraft Bus resources.

d. Verify stored commands execution.

e. Spacecraft scheduling and planning.

During the Orbit Acquisition Initialization phase, a positive Spacecraft energy balance and an S-Band communications link are established. A stable earth-oriented attitude is attained and an onboard orbit estimate is obtained.

The FOT is prepared to take command and control of the Spacecraft and are responsible for the following activities:

a. Monitor Spacecraft Bus housekeeping telemetry (phase specific display sets).

b. Monitor and verify Spacecraft Bus operating mode.

c. Monitor and verify Spacecraft Bus resources.

d. Verify stored commands execution.

e. Verify Earth acquisition.

f. Verify Solar Array deployment and solar tracking.

g. Verify High Gain Antenna deployment.

h. Verify command and control capability.

h. Spacecraft scheduling and planning.

TIMELINE TIME REFERENCE

500 km Perigee Injection Orbit

LAUNCH (MINUTES)

L- TBD	L- TBD	L	L+ 3	L+ 4	L+ 15

GO TO INTERNAL POWER (MINUTES)

G	G+ TBD	G+ 5	G 8	G+ 9	G+ 20	G 20	G 21	G 22.5	G+ 37.5	G+ 39	G 47	G+ 69.5	G+ 82	G 82	G+ 118	G+ TBD	G TBD	G TBD	G TBD	G+ 267

SEPARATION (MINUTES)

S	S	S+ 1	S+ 2.5	S+ 17.5	S+ 19	S+ 27	S+ 49.5	S+ 62	S+ 62	S+ 98	S+ TBD	S+ TBD	S+ TBD	S+ TBD	S+ 247

EVENT

- Go to Internal Power
- Disconnect T-0 Umbilical
- Ignite Stage 0 and Liftoff (L)
- Booster Engine Cutoff (BECO)
- Jettison Fairing
- Separate Launch Vehicle / Spacecraft - First Perigee
- Begin Rate Null (SCC Commands)
- Complete Rate Null
- Begin Solar Array Deployment
- Complete Solar Array Deployment
- Complete Earth Acquisition
- Enter first Eclipse
- Pass First Apogee
- Exit first Eclipse
- Solar Array begins to Track the Sun
- Pass second Perigee
- Activate HGA release mechanisms (SCC commands)
- HGA Deployment Complete
- HGA slew to Acquire sight to TDRSS (SCC Commands)
- S-Band link to TDRSS established through HGA
- First Delta-V Burn (third apogee earliest)

NOTE: This timeline was developed by the EOS System Engineering Group. Please note that it is preliminary and as definition of the Launch Vehicle System and sequence timing is developed, this timeline will be updated.

FIGURE 24 LAUNCH / ASCENT PHASE TIMELINE

During the Orbit Acquisition phase, the Spacecraft performs a series of delta-V maneuvers (significant change in velocity vector). The FDF and FPSG are responsible for calculating burn parameters, planning the delta-V maneuvers, calculating the required firings, scheduling, and performing the maneuvers. Figure 25 shows a timeline of the planned maneuvers. Figure 26 shows an activity flow.

The FOT is responsible for the Spacecraft operation and the following activities:

a. Monitor Spacecraft Bus housekeeping telemetry.

b. Monitor and verify Spacecraft Bus operating mode.

c. Monitor and verify Spacecraft Bus resources.

d. Verify stored command execution.

e. Coordinate the FDF Delta-V data inputs to the EOC.

f. Verify on-board Solid State Recorder status.

g. Real-time command and control.

h. Spacecraft scheduling and planning.

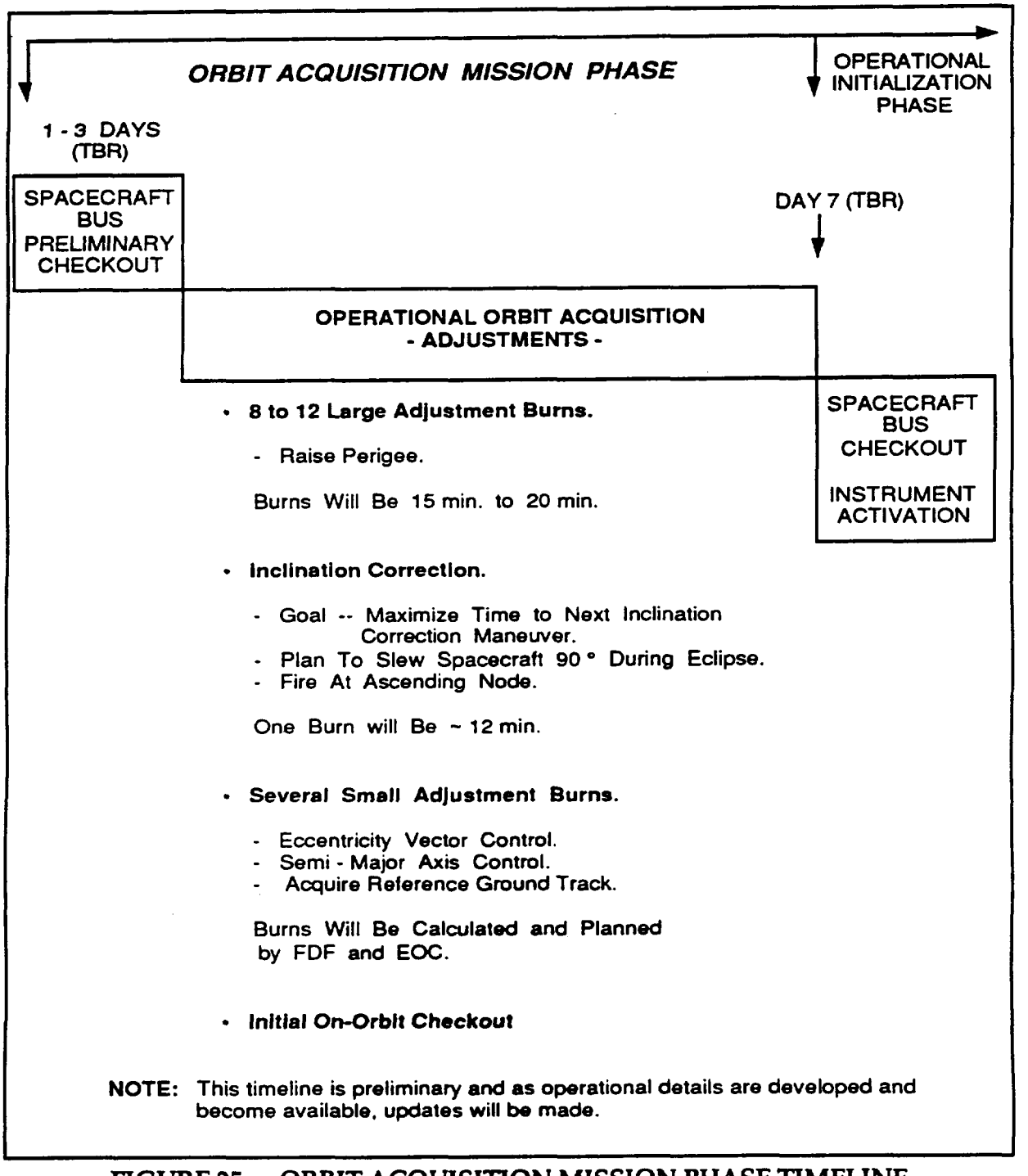

FIGURE 25 ORBIT ACQUISITION MISSION PHASE TIMELINE

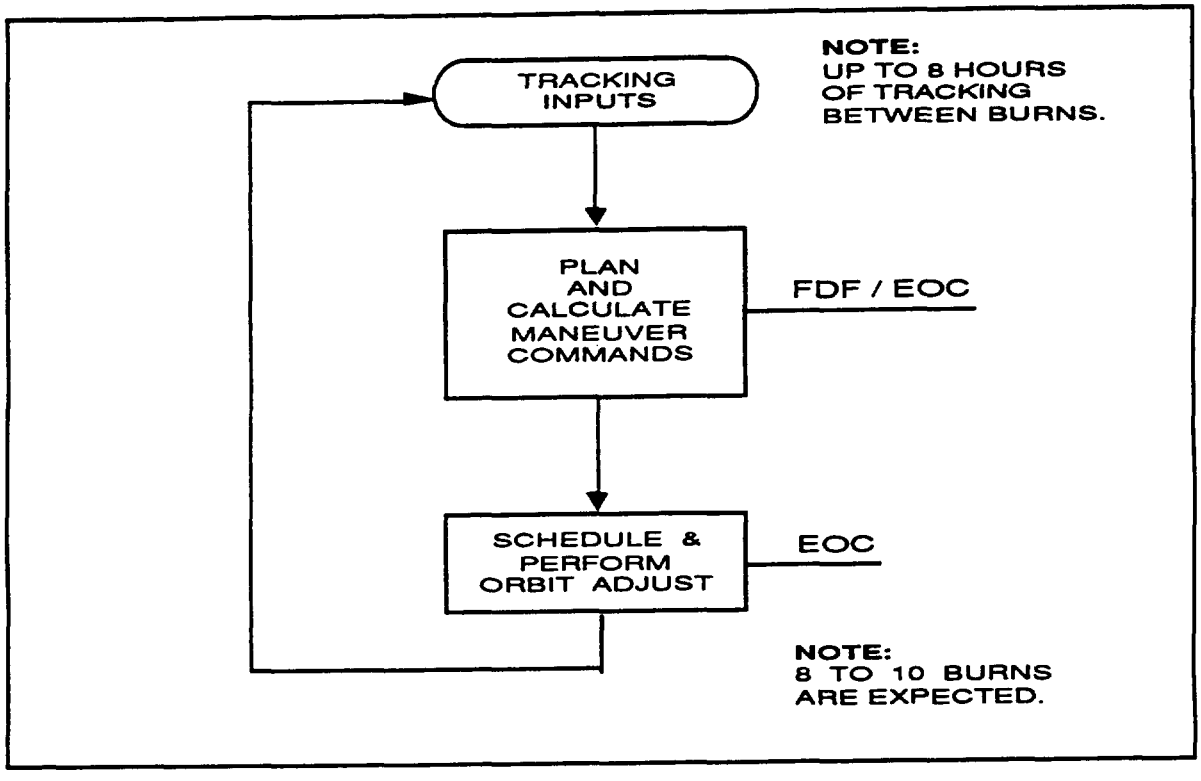

FIGURE 26 DELTA-V ACTIVITY FLOW

5.6.2 Activation

Spacecraft activation follows the launch through Orbit Acquisition phases, and leads into orbital mission operations. Most activation events occur over a period of several weeks during the Operational Initialization phase. The MISR PI is responsible for all MISR activation plans, and is expected to provide the MISR contribution to the initial Spacecraft activation plan. The FOT is responsible for the Spacecraft Bus activation plans and procedures.

The MISR PI or designated representative(s) is present in the EOC during each MISR activation event and has direct responsibility for MISR activation procedures within the EOC. The FOT supports the MISR PI or designated representative(s) in implementing instrument activation procedures, and coordinates initial MISR operations with other Spacecraft Bus and instrument activation events throughout this phase of operation. Specific requirements for FOT and MISR PI support are TBD. Activities during MISR instrument activation are defined in Appendix VI.

The FOT is responsible for the activation and checkout of the Spacecraft subsystems and the following activities:

a. Monitor Spacecraft Bus housekeeping telemetry.

b. Monitor and verify Spacecraft Bus operating mode.

c. Monitor and verify MISR health and safety data.

d. Coordinate the MISR operations with the Instrument Team.

e. Monitor and verify Spacecraft Bus resources.

f. Spacecraft scheduling and planning.

g. Stored command table loads.

h. TDRS and EOS-AM Spacecraft ephemerides load.

i. Instrument microprocessor loads (if required).

j. Memory dump verification (if required).

k. Verify stored commands execution.

l. Coordinate the FDF data inputs to the EOC for required Delta-V operations and TONS.

m. Verify SSR status and management initialization (normal operation).

n. Spacecraft and Ground Systems operational phase readiness verification and turn-over to the Spacecraft mature operations.

5.6.3 Transition to Orbital Operations

After the EOS-AM Spacecraft Bus and instruments are fully activated, Spacecraft operations transitions into the Operational mission phase. When this occurs, the normal daily flight operations planning and scheduling process begins along with normal ground system operations.

The FPSG uses the MISR baseline activity profile (provided before launch by the MISR PI), unless an operations request containing an activity deviation list is received from the MISR PI, to generate MISR instrument activity lists.

5.7 Spacecraft Maneuvers

Several types of maneuvers are executed by the Spacecraft at predefined points throughout the EOS-AM mission. A nominal long-term schedule of maneuver events is available prior to launch, and is maintained current along with other long-term planning information. The EOS-AM Science Team will be responsible for factoring the maneuver schedule into the long term science plan, and for establishing overall compatibility between this schedule and planned science operations. The FOT is responsible for maintaining maneuver schedule currency, and for notifying the EOS-AM Science Team (via the Project Scientist) of maneuver schedule changes.

The FOT has responsibility for all maneuver operations. The FOT and FDF are jointly responsible for the detailed planning of each Spacecraft maneuver and the FOT is responsible for maneuver execution. For orbit adjust maneuvers, the FDF is responsible for developing plans for corrective firings of the orbit adjust system and also is responsible for providing planning aid and operational data updates to reflect maneuver results. The FPSG coordinates with the FDF to schedule specific maneuver events consistent with long term science plan intent and is responsible for scheduling instrument operations to accommodate maneuver implementation. The MISR PI is responsible for defining all maneuver accommodation requirements (including special command sequences, EOC displays, etc.) for MISR, for reviewing the maneuver operational plans, and for advising the FOT, as appropriate, of any concerns regarding these plans. Specific MISR requirements for Spacecraft maneuver accommodation actions are defined in Appendix IV.

5.8 Special Observations

The FOT is responsible for coordinating with the MISR PI regarding any special observation activities, such as joint observations, or instrument operations which violate pointing or uncompensated motion constraints, which may affect MISR.

Other instrument PIs may request joint observations activities with MISR directly to the PI. No DAR use is envisioned by MISR.

Specific MISR requirements for special observation actions are defined in Appendix IV.

5.9 Contingencies

In the event that a Spacecraft emergency situation develops, the FOT is responsible for taking whatever action is appropriate to preserve Spacecraft health and safety. The FOT requests emergency support from the NCC. If TDRSS cannot be used or is not available, the NCC works with the DSN/GN/WOTS for support. The FOT

utilizes emergency support, as available, to establish a safe Spacecraft configuration. First priority is given to mission critical functions (i.e., communications, power, attitude control), and then to establishing a safe configuration for the EOS-AM instruments and other Spacecraft Bus subsystems.

The MISR PI is responsible for defining the safe/survival configuration(s) for MISR, and the command sequences necessary to establish that configuration. Specific MISR requirements for contingency actions are defined in Appendix IV.

If the Spacecraft enters Safe Mode or Survival Mode, the FOT is responsible for verifying/establishing a safe configuration for each instrument and Spacecraft Bus subsystem. The FOT notifies the MISR PI that the Safe Mode or Survival Mode has interrupted normal operation, and of resulting MISR instrument status. The MISR PI is responsible for advising the FOT of any need for further priority attention to MISR. The MISR PI is also responsible for defining any reactivation procedure to be followed in restoring normal instrument operation. The FOT is responsible for implementing all Safe Mode or Survival Mode reaction and recovery operations. These actions will include:

a. Initiate the appropriate contingency procedure.

b. Recover and analyze stored housekeeping / health and safety data from the on-board data storage device (if possible).

c. Notify the MISR PI to coordinate actions that may have occurred which relate to instrument operation.

d. Notify cognizant engineering and management personnel.

e. Request appropriate institutional support.

f. Analyze associated telemetry data available for problem isolation.

g. Initiate a corrective action plan if applicable.

h. Continue to monitor real-time telemetry if available, and log all events.

The FOT notifies the MISR PI in the event an instrument health or safety incident is discovered by the Flight Operations Team. The FOT follows predefined instructions as prescribed by the MISR PI. The FOT has available and maintains a set of "safing" commands provided by the PI. The MISR PI will be responsible for evaluating the incident and advising the FOT of instrument status and plans for resuming operations.

The FOT is responsible for re-establishing the continuity of planned science operations, as defined in the Spacecraft activity schedule, once the Spacecraft has been returned to a normal operating configuration.

The MISR PI is responsible for defining all health and safety telemetry parameters and EOC monitoring criteria for MISR, and the procedures to be followed by the FOT should a MISR health and safety incident occur. The FOT is responsible for executing predefined monitoring and response procedures, consulting with the MISR PI regarding instrument status, and further response actions which might be appropriate. The FOT advises the PI of MISR status regarding operational planning activities which are currently underway and the FOT is responsible for adjusting ongoing plans for MISR operation to accommodate the situation at hand (in coordination with the MISR PI). The MISR PI is responsible for defining command sequence, EOC procedure and any other modifications necessary to reflect changes in MISR operational capability or status whenever necessary throughout the EOS-AM mission.

6 INTERFACE EXCHANGE ITEMS

This section is still in work with several remaining issues to be worked at the time of this release. The MISR instrument team's support requests, revisions, and additions have been included and are to be reviewed with GSFC.

The MISR PI exchanges information electronically with the EOC and the Flight Operations Team by using the IST. The IST is connected to the EOC via the EOSDIS computer networks. These networks are available around the clock, supporting the exchange of information whenever it is required. The formats and forms for this information exchange is the responsibility of the ECS contractor and are TBD.

6.1 Planning and Scheduling

The MISR PI may access any planning and scheduling products in the EOC. This includes the long-term plans, planning aids, the list of routine activities for MISR, the list of deviations (such as the substitution of a Local Mode site or its cancellation) for MISR, the TDRSS schedule for the spacecraft, and the schedules for the other instruments and the Spacecraft Bus subsystems. The list of activities is defined to be the Types of observations (Local Mode, Global Mode, Calibration, Dark Mode), but not the actual placement in the specific orbits.

The planning aids consist of information derived from predicted orbit information and are identified in Appendix V. The planning aids can display the information graphically or in tabular form. The details of the specific planning aids to be provided via the IST are TBD, including the "access" definition (i.e. read/write, modification control).

The list of routine activities can be reviewed by the MISR PI using the IST. This list comprises the activities that MISR normally performs over its 16 day, 233 orbit cycle. The basic set (not placement) of activities will be defined prior to launch, and changed infrequently. The placement within the cycle of the specific activities (i.e. the location of the Local Mode observations) will not be performed until later in the scheduling process. Modification to the list of activities (i.e. addition of new modes or configurations) are discussed with the Flight Planning and Scheduling group (FPSG); modifications that impact the science data collected are coordinated with the IWG and the Project Scientist. Modifications are submitted via the IST to the FPSG for inclusion in the planning and scheduling database after the proper approvals.

The MISR PI can submit and review the schedule of deviations from the normal activities. This schedule will include activities such as special observations and the placement of the Local Mode observations. These activity deviations are provided to the FPSG in accordance with the required notification constraints. NOTE: Changes to the routine activities due to an instrument or spacecraft anomaly are

handled as exceptions to the plans and schedules. The schedule of activities and commands associated with recovering from an anomaly are typically developed over shorter time frames than those for normal operations.

Quick look data, high-rate instrument engineering or science data, are identified during the scheduling process. The secondary header flag in the packet is set, or the EDOS delivery orders for TDRSS session deliveries are modified. The FOT will be notified by MISR of such data via the IST.

6.2 Command Generation

Command generation includes real-time commands, SCC stored commands, MISR sequence tables, and flight software loads (microprocessor loads).

The MISR PI provides the list of MISR macro sequence activities for each 16 day (233 orbits) cycle to the EOC FPSG via the IST. There it is converted using a database and the current spacecraft orbit into a format for uplink to the spacecraft. This upload is provided to the FPSG at least 2 weeks prior to execution. The IST is also used to send the EOC the command mnemonics required to implement any non-routine activity, such as the commands to recover from an anomalous situation. The IST/EOC procedures and protocols (TBD) insure that the transfer of information to be uplinked is authorized, complete, and consistent.

The MISR PI has the capability of using the IST to review and/or approve the command loads generated by the FOT FPSG in the EOC from the routine activity list, the macro sequence list, and the requested deviations from normal operations. Planning, scheduling and/or command products that must be approved by the MISR PI for routine and anomalous operations are TBD.

6.3 Real Time Operations

Using the IST, the MISR PI has the capability to monitor the housekeeping data as it is received in the EOC. The data may be displayed using any previously defined format that is in the operations database. Formats for the alphanumeric information, and graphic formats are TBD. Use of this data by the MISR PI in real-time is TBD.

MISR requires the FOT on-line crew to monitor the health and safety of the instrument utilizing the 10 minutes of housekeeping data available twice an orbit during the TDRS contacts, and in near-real time from a single complete orbit of MISR housekeeping data (may also include one or two spacecraft telemetry points such as MISR input current, this is still TBD) dumped from the spacecraft housekeeping SSR buffer once per day (this is a request from MISR that is TBR).

The FOT shall have access (method TBD) to additional engineering data as required from the high rate engineering, and MISR long term trended data from the DAAC.

The MISR PI has the capability to monitor the commanding process via the IST. Status information is available on which commands (command loads) have been generated, which have been successfully uplinked to the spacecraft, and which have been issued to MISR. The MISR PI will specify the the success criteria for each of these with respect to MISR. The final verification of instrument performance (post execution of command loads) is the responsibility of the PI and MISR team. Exceptions are TBD by the ECS contractor and the MISR PI. (?)

6.4 Analysis

The MISR PI has the capability to use the IST to perform analysis on MISR and spacecraft housekeeping data. The standard capabilities include trend analysis, and minimum/ maximum/ mean statistics (although this may not be adequate if the majority (or half) the housekeeping engineering data is acquired over Dark Mode TDRS contact periods. This needs further investigation). The MISR PI shall have the capability to transfer (method TBD) housekeeping and/or C H&S data from the EOC databases to the SCF via the IST.

The IST functions provided for instrument engineering, science analysis and quick look data analysis is TBD.

The analysis of health & safety of MISR (not to be confused with the critical health and safety engineering telemetry) is limited to the housekeeping data received at the EOC, currently real-time during the TDRS contact periods twice per orbit, and at least one (MISR may need more than one!) orbit per day of a complete orbit's worth of housekeeping data from the onboard SSR (this is a request from MISR that is TBR). (See paragraph 6.3.) If the MISR PI needs housekeeping data from a specific time of day, it must be requested in advance. (For example, to capture the calibration orbit once a month in as near to real time as is possible.)

In addition to housekeeping data, the MISR PI is able to use the IST to access (read only) the EOC operations history log. This log contains a complete listing of all significant activities in the EOC, including the schedule, command generation, transmission, and command verification information, alarms and limit violations, and selected operator's actions. About 7 days of operations history data is kept in the EOC; older logs are available from the GSFC DAAC. The IST provides the tools to extract data from the operations history by time and type. The capability to feed MISR team-trended engineering from the DAAC back to the EOC for FOT database updates should be addressed here as worked (via IST is TBR).

In addition, the MISR PI will retrieve high rate engineering data packets from EOSDIS/EDOS to characterize MISR instrument performance in more detail, and over longer time periods.

6.5. Operations Database

The MISR PI supplies the EOC with an operations database (may be several databases – command, telemetry alarms separate this is TBR) prior to launch that contains the MISR telemetry formats, command formats, procedures (TBD), limits, constraints, etc. The MISR PI may view this database using the IST and submit requests for changes to the databases (forms and formats TBD). The ECS contractor is responsible for the configuration control of the database(s), and the details are TBD.

Urgent requests can be handled more expeditiously (details are TBD).

6.6 Other Interface Exchange Items

The IST provides an electronic mail capability to support the general operations - related communication between the MISR PI, other instrument teams, and the FOT personnel in the EOC. Examples include notifications from MISR to FOT in near real-time of activity or instrument changes.

The IST provides a file transfer capability for the exchange of bulk data such as the MISR microprocessor (flight software) loads and dumps.

The MISR PI uses the IST to provide the EOC with periodic operations reports on the status of MISR. Integrated reports on the Spacecraft and instruments developed by the EOC are available to the MISR PI via the IST on a TBD schedule.

7 JOINT OPERATING PROCEDURES

The interface procedures which are followed in conducting MISR flight operations are understood to be as follows (at this time, this section is TBR and revised):

7.1 PI/EOC FOT Interface

The MISR PI and the Flight Operations Team (see Figure 27) interface routinely regarding mission planning, uplink generation, and performance verification matters and interface as required regarding real-time operations. The FOT and MISR PI interface as appropriate regarding MISR instrument accommodations of Spacecraft maneuvers and contingency operations. The FPSG serves as the primary point of contact for the MISR PI regarding all EOC operations, and regarding all flight operations plans, planning aids, command generation inputs and outputs, and performance reports which are pertinent to MISR.

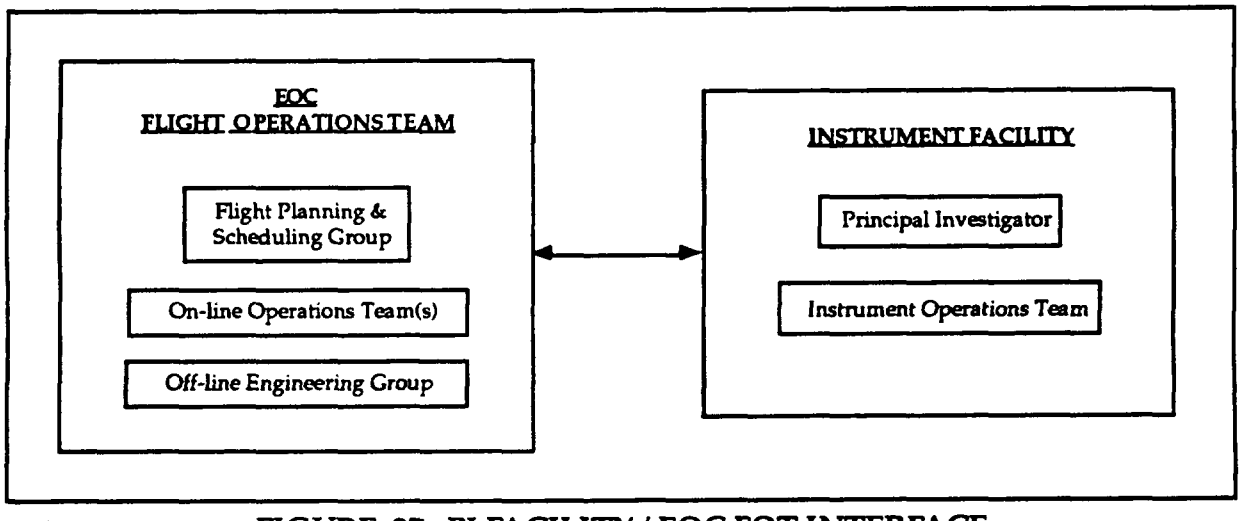

FIGURE 27 PI FACILITY / EOC FOT INTERFACE

7.1.1 Daily Operations Planning

Under normal circumstances, the MISR baseline activity profile is used to develop the initial activity list 4-7 days before the corresponding operational period begins. The MISR PI provides exceptions, activity deviation lists, in the event normal MISR baseline activities needs to be altered. The FPSG staff coordinates all operations planning inputs, and keeps the MISR PI advised of the timetable for accessing plans to be reviewed, and for providing inputs and/or comments regarding these plans.

7.1.2 Command Generation

Command generation is performed by the FPSG using EOC resources. The FPSG serves as the point of contact for all review comments related to command generation processing.

7.1.3 Special Operations

The FPSG notifies the MISR PI whenever a Spacecraft maneuver operation is being planned, or whenever a special operation (TBR) or contingency operation which affects MISR occurs. The MISR PI defines MISR requirements for accommodating the special operation and/or for resuming normal operation when the special operation has concluded. Where real-time operation is a factor, the FOT represents the MISR PI in coordinating implementation of appropriate real-time procedures. If a special operation disrupts planned operations (e.g., contingency situation), the FOT advises the MISR PI of the disruption, and they will jointly define the procedure for restoring operational plan continuity.

7.1.4 EOC Database

The FPSG manages the availability of operations plans, planning aids, and command generation processing inputs and outputs, and coordinates with the MISR PI regarding access to this information. The MISR PI generates all additions, deletions, and modifications to the EOC database for MISR, and notifies the FPSG of each submission. The FPSG coordinates the database approval and update procedure required to incorporate each change, and notifies the MISR PI when the change has been incorporated. The MISR PI reviews the modified database, and notifies the FPSG of any discrepancy which requires corrective action. The format to be used is TBD and is the responsibility of the ECS contractor.

7.1.5 Microprocessor Load Verification

The FOT transmits the MISR microprocessor loads and verifies the loads via checksum (TBR). If verification beyond a checksum is required or a checksum capability is not provided, the MISR PI verifies that each microprocessor load transmitted to the instrument(s) is properly received and installed within microprocessor memory. When verification is prerequisite to instrument scheduling, the MISR PI will notify the FPSG staff of load verification. When real-time telemetry indications of microprocessor load acceptance are available, load verification feedback may be provided by the FOT at the discretion of the MISR PI.

7.2 PI/EOC Command Management Function Interface

The MISR PI interfaces with the EOC through the IST interface defined in TBD. The basic interface for information exchange is via file transfer. The MISR PI has access to EOC resident information and processing capabilities (details are TBD).

The MISR PI interfaces procedurally with the EOC as follows:

7.2.1 Operations Plans

In support of flight planning activities, the MISR PI can access EOC information via the IST. Any comments or proposed deviations to operational plans may be flagged (TBR) for the FPSG attention.

7.2.2 Planning Aids

Short term planning aid data initially appears within the EOC TBD weeks beforehand, and will be updated at TBD intervals. Long term planning aids are updated as requested by the EOS-AM Science Team (normally for each long term science plan update). Special planning aid data files may be assembled to contain only data of interest to the MISR PI and transferred to the MISR IST. Planning aid data is updated within the EOC according to a (TBD) regular schedule.

7.2.3 Command Generation

Routine Spacecraft command generation processing will begin TBD hours before the operational period, and is completed no later than TBD hours beforehand. The MISR PI does not interact directly with EOC Spacecraft command generation processing.

7.2.4 Performance Feedback

Observed performance of MISR is documented in feedback reports which are transmitted in text form using the electronic mail capabilities of the EOC and IST interface. Routine and special reports are generated by the MISR PI at his IST, and are transferred to the EOC for posting. Performance reports are filed and archived by the FPSG.

7.3 PI/FOT Interface

The MISR PI and the on-line operations team interface to the extent that real-time

operations are significant to the MISR PI, and as required to exchange instrument/Spacecraft Bus performance information or to supplement the routine interface between the MISR Principal Investigator and the FPSG.

The MISR PI interfaces procedurally with the FOT as follows:

7.3.1 Real Time Operations

For real-time operations, the on-line operations team (TBD) is the point of contact for the MISR PI (TBR). In the event of an instrument anomaly, MISR operations team (TBD) coordinates with the on-line operations team (TBD) for any actions required. MISR operations team (TBD) contacts the MISR PI as soon as possible to review the situation and to define any follow-up activities required.

7.3.2 Special Operations

The normal interface for handling maneuver accommodation, contingency adjustments, and departures from planned operations involves the MISR PI and the FPSG. The on-line operations team may, however, become involved in these matters in lieu of the FPSG staff during non-working hours, especially under time-critical circumstances. In such a case, the on-line operations team handles immediate concerns, with the FPSG staff handling longer-term and follow-through aspects.

7.3.4 Initial Operations

During initial MISR activation, the MISR PI or delegate at the GSFC EOC works directly with the FOT. Flight planning and scheduling personnel interface with the MISR PI to perform the MISR planning and scheduling functions.

7.3.5 Performance Verification

The MISR PI and FOT may exchange performance information regarding instrument and/or Spacecraft operation in order to fully evaluate observed performance and capability. A Spacecraft engineer from the FOT serves as the point of contact for Spacecraft performance verification inquiries.

7.4 PI/DAAC Interface

The MISR PI interfaces with the DAAC via DAAC toolkits (that are co-operable with the IST toolkit). DAAC toolkit details are TBD. The data processing interface

between IST(s) and the DAAC is utilized for flight operations functions.

Details are TBD.

7.5 PI Access to Telemetry

The following guidelines define access to telemetry data for the MISR PI:

a. Telemetry data is recorded continuously throughout the EOS-AM mission by the on-board SSR. Data retrieval is obtained TBD per orbit.

b. Telemetry data is acquired in real-time for approximately 20 minutes of each orbit.

c. The on-line operations team monitors all real-time contact intervals and the telemetry data acquired is processed in real-time. The EOC computer performs status determination, event detection and limit-check processing, and generates displays containing telemetry data and processing results.

8 IMPLEMENTATION AGREEMENTS

The following paragraphs describe the plans for implementing the data input to the operational system to support MISR flight operations (at this time, this section is TBR and revised):

8.1 Flight Operations Database

The basic flight operations databases are provided by the Spacecraft contractor. Database conversion, to the EOC system, is the responsibility of the EOSDIS Core System contractor. The Flight Operations Database will consist of the Commands, MISR telemetry decommutation, and alarm limit data.

8.1.1 Commands

Instrument commands are placed in the EOC database. The database contains command capabilities identified by the MISR PI, with support from the FOT and Spacecraft subsystem engineers. All flight operational commanding required is tested and demonstrated during Spacecraft integration and test. The EOC command categories are TBD.

8.1.2 Instrument Telemetry

The MISR PI, with support from the FOT and Spacecraft subsystem engineers, identifies telemetry point definitions required for flight operations; and the Spacecraft contractor ensure that telemetry points have been defined and tested/demonstrated during Spacecraft Integration and Test (I & T).

8.1.3 Instrument Limits

The MISR PI, with support from FOT and Spacecraft subsystem engineers, ensures that the Spacecraft integration and test limit definitions are correct for on-orbit flight operations. If not, new limits are defined and the ECS contractor coordinates (Project approval and entry) the change to the EOC database.

The MISR PI with support from the FOT and Spacecraft subsystem engineers identifies the specific reactions to be taken during all out-of-limit conditions (i.e. Red, Yellow, and Delta limits). The FOT documents all out-of-limit reactions in the TBD Plan.

8.1.4 Database Approval

The MISR PI and Spacecraft subsystem engineers access the database via IST to review their appropriate section(s). Changes to the database are submitted via IST mail. The PI and Spacecraft subsystem engineer checks the database to ensure that the data is functionally and syntactically correct. After all of the database information for MISR has been approved, the MISR PI signs off on his portion of the EOC database.

8.2 Operational Displays

The MISR PI, with support from the FOT and Spacecraft subsystem engineer, identifies which displays are needed for in-orbit flight operations. Any displays deemed necessary are defined by the MISR PI and once approved, are entered or converted by the EOSDIS Core System contractor. The MISR PI with support from the Spacecraft subsystem engineers, assists the FOT with any conversion problems (i.e. mnemonics, values, etc.). The mechanism for defining pages and transferring Spacecraft integration and test pages to the EOC is TBD.

8.3 Operations Procedures

The MISR PI, with support from the FOT and Spacecraft subsystem engineers, establishes what operational procedures are needed for on-orbit flight operations. The MISR PI should keep in mind that I & T building blocks may have to be assembled into contiguous functional activities that are of reasonable duration harmonious with the in-orbit operational contacts. The FOT reviews all completed operational procedures for compatibility with flight operations such as procedure duration, logical break points, etc.

8.3.1 EOC Definition

The FOT furnishes to the MISR PI a description of the EOC operations procedures. In addition, the FOT is available to answer questions regarding EOC operations during operations procedure development.

8.3.2 I&T Procedures to EOC Operations Procedures Conversion

The conversion of procedures to the EOC is the responsibility of the EOSDIS Core System contractor and is TBD.

8.3.3 I&T Databases to EOC Operations Databases Conversion

The conversion of databases to the EOC is the responsibility of the EOSDIS Core System contractor and is TBD.

8.3.4 Flight Unique Procedures

The MISR PI, with support from the FOT and Spacecraft subsystem engineers, identifies any MISR instrument unique flight operations procedures. These procedures are created by the MISR PI with support from the Spacecraft subsystem engineers and submitted to the FOT.

8.3.5 Procedure Submittal

The MISR generated operations procedures are submitted to the FOT by one of the following methods: TBD

Procedure entry, after approval, into the operational system is the responsibility of the EOSDIS Core System contractor and is TBD.

8.3.6 Approved EOC Procedures

Once the procedures have been reviewed and approved, they cannot be changed without the NASA Mission Operations Manager's (MOM) approval.

8.3.7 Procedure Verification

The FOT reviews all operations procedures to verify the accuracy of the directives and also the logic to the extent possible. The MISR PI with support from the FOT and Spacecraft subsystem engineers identifies operations procedures that require execution for verification. Prior to launch, the FOT conducts a scheduled verification of operations procedures that will include EOC execution and transmission to the Spacecraft/instrument. Procedure verification details are the responsibility of the EOSDIS contractor and are TBD.

8.4 Narrative Procedures

The MISR PI, with support from the FOT and Spacecraft subsystem engineers, defines any standard and contingency operating procedures needed for in-orbit

flight operations. These procedures are defined by the EOSDIS contractor and are TBD.

8.4.1 Standard Operating Procedures

The standard operating procedures define the day-to-day operations of the EOS-AM Spacecraft at the EOC.

These procedures are baselined and procedure changes require the NASA Mission Operations Manager's approval.

These procedures are defined by the EOSDIS contractor and are TBD.

8.4.2 Contingency Operating Procedures

The contingency operating procedures define the actions required by the FOT during potential and credible anticipated non-nominal situations. Examples of this category of procedures for MISR are:

- Instrument requirements during Spacecraft safe mode and survival mode.
- A procedure to be followed in the event of a MISR ALERT condition.

These procedures are defined by the EOSDIS contractor and are TBD.

APPENDIX I

10 SPACECRAFT CONTROLS COMPUTER INSTRUMENT REQUIREMENTS

Specific requirements for interaction between the Spacecraft on-board computer and MISR are understood to be as follows (TBR):

10.1 Stored Command Requirements

MISR stored command requirements are as follows:

a. The SCC shall be capable of transferring a 16 day table of command parameters to the MISR instrument on a TBD schedule.

10.1.1 Absolute Time Commands

MISR requirements for absolute time command utilization are TBD.

10.1.2 Relative Time Sequences

MISR requirements for Relative Time Sequences command utilization are TBD.

10.2 Telemetry Monitor Requirements

Telemetry Monitor (TMON) application to MISR is as follows and TBR:

The TMON needs to monitor the following MISR telemetry points and EOS-AM spacecraft points (TBR):

Spacecraft Telemetry:

a. MISR input current

MISR Telemetry Points

a. TBD but may include currents of camera power supplies and Nadir Radiator temperature.

The only instances of spacecraft intervention would be in cases of over current or over temperature of the instrument. The limits for these are TBD. The reaction would be to command MISR to standby and or Safe mode (TBD) and to dump recorded housekeeping data for anomaly resolution.

APPENDIX II

20 INSTRUMENT COMMAND PROCESSING REQUIREMENT

Specific command processing requirements for MISR are understood to be as follows (TBR):

20.1 Activity Planning Requirements

MISR shall be able to access information on the IST

20.1.1 Activity Definition

TBD

20.1.2 Event Definition

TBD

20.1.3 Activity Scheduling

There are critical timing requirements for MISR commands or activities. During the mission lifetime, joint observations between ground teams, aircraft and/or other instruments will be scheduled.

20.2 Constraint Check Requirements

TBD

20.2.1 Command Level

The MISR constraint check requirements at the command level are as follows:

TBD

20.2.2 Activity Level

TBD

20.2.3 Schedule Conflicts

MISR commanding will consist of uplinked tables of parameters for use by the MISR computer, and therefore, other than TDRSS contact schedule problems, there should be few schedule conflicts with other instrument observations.

Scheduled joint observations between ground, EOS-AM, and air flight (all called a vicarious calibration), will be scheduled on an infrequent basis. These observations must not be rescheduled, if possible. The PI shall be notified if TBD.

20.3 Real-Time Command Requirements

The following are the real-time command requirements for MISR.

20.3.1 Utilization Plans

At the current time, the only plans for real-time commanding are in the Integration and Test phase, initial activation on-orbit of MISR, and on a contingency basis to remove power from the instrument or place it in a non-science mode. Details of these commands sequences are TBD.

20.3.2 Command Generation Capabilities

The EOC shall have the capability to provide generation of real-time commands.

20.3.3 Transmission Requirements

There are no unique requirements for transmitting real-time MISR commands.

20.4 Microprocessor Load Handling Requirements

The requirements for the reloading of parts or all of the MISR flight software are TBD.

20.4.1 Uplink Message Structures

The uplink command message structures are consistent with the 1553B interface as specified in the GIIS.

20.4.2 Transmission Requirements

Each microprocessor load is created as a unit, and is transmitted in complete form. If retransmission is necessary, the complete load is retransmitted.

The parameter table updates (16 day activities) are transmitted to the MISR instrument at least TBD prior to the start of the activities.

20.5 Command Database Requirements

Command database requirements are as follows:

20.5.1 Command Definition

MISR commands will be the same for both Integration and Test and Flight Operations. Table VI describes the commands. Note: Table VI (The Command List) will be expanded as details become available.

TABLE VI COMMAND LIST

Command Name	Type	Format	Other Details TBD
Cover Control	Bus	1553	
Cover / Goniometer Latch Control	Bus	1553	
Calibration Panel Control	Bus	1553	
Calibration Panel North Latch Control	Bus	1553	
Calibration Panel South Latch Control	Bus	1553	
Camera Control	Bus	1553	
CPU Control	Bus	1553	
Diodes Control	Bus	1553	
Goniometer Control	Bus	1553	
Memory Dump	Bus	1553	
Memory Load	Bus	1553	
Parameter Update	Bus	1553	
Mode Control	Bus	1553	

TABLE VI (continued) COMMAND LIST

Command Name	Type	Format	Other Details TBD
Prereg A Select	Relay		
Prereg A ON	Relay		
Prereg B Select	Relay		
Prereg B ON	Relay		
Preregs OFF	Relay		
Survival Heaters A ON	Relay		
Survival Heaters B ON	Relay		
Survival Heaters OFF	Relay		

20.5.2 Unique Command Structures

None have been identified for MISR. However, the equator dark side crossing time (ascending node) is possible, as it is the key to maintaining the commanding within the MISR microprocessor on a relative time basis.

20.5.3 Activity Definitions (EOC Command Management)

TBD

20.5.4 Stored Command Sequences (EOC Command Management)

TBD

20.5.5 Real-Time Command Sequences (EOC)

TBD

20.5.6 Utilization Constraints

TBD

APPENDIX III

30 TELEMETRY PROCESSING REQUIREMENTS

Specific requirements for the processing of real-time MISR telemetry data are understood to be as specified in the following paragraphs. Telemetry will be transferred by either the 1553 C&DH interface, BDU, or the high rate science interface. Each type of CCSDS packet transferred on the high rate science interface will have a unique Application Process Identification (APID). Currently, 21 unique APIDs have been identified as follows:

- 9 APIDs to identify the Earth-observationing data from each of the nine cameras (separate band information is internal to the packet)
- 9 APIDs to identify the camera calibration data from each of the nine cameras (separate band information is internal to the packet)
- 1 APID to identify a pre-determined test data packet (EOS-AM request)
- 1 APID to identify high rate engineering data packet
- 1 APID to identify calibration diode data.

30.1 Decommutation Requirements

All telemetry required by the EOC to support instrument early orbit operation and activation are assumed to be defined in the I & T databases to be transferred to the EOC. Table VII enumerates the MISR Telemetry List. Note: Table VII (The Telemetry List) will be expanded as details become available.

TABLE VII Telemetry List

Telemetry Name	Type	Other Details TBD
Bias Voltage, HQED1	Bus	
Bias Voltage, HQED2	Bus	
Bias Voltage, HQED3	Bus	
Bias Voltage, HQED4	Bus	
Current, NCalP, MDDA1	Bus	
Current, NCalP, MDDA2	Bus	
Current, SCalP, MDDA1	Bus	
Current, SCalP, MDDA2	Bus	
Current, Camera Aa PS	Bus	
Current, Camera Af PS	Bus	

TABLE VII (continued) Telemetry List

Telemetry Name	Type	Other Details TBD
Current, Camera An PS	Bus	
Current, Camera Ba PS	Bus	
Current, Camera Bf PS	Bus	
Current, Camera Ca PS	Bus	
Current, Camera Cf PS	Bus	
Current, Camera Da PS	Bus	
Current, Camera Df PS	Bus	
Current, DC/DC 1	Bus	
Current, DC/DC 2	Bus	
Current, Goniometer Motor	Bus	
Temp, CCD Aa	Bus	
Temp, CCD Af	Bus	
Temp, CCD An	Bus	
Temp, CCD Ba	Bus	
Temp, CCD Bf	Bus	
Temp, CCD Ca	Bus	
Temp, CCD Cf	Bus	
Temp, CCD Da	Bus	
Temp, CCD Df	Bus	
Temp, CSE Chassis Aa	Bus	
Temp, CSE Chassis Af	Bus	
Temp, CSE Chassis An	Bus	
Temp, CSE Chassis Ba	Bus	
Temp, CSE Chassis Bf	Bus	
Temp, CSE Chassis Ca	Bus	
Temp, CSE Chassis Cf	Bus	
Temp, CSE Chassis Da	Bus	
Temp, CSE Chassis Df	Bus	
Temp, Spectralon 1	Bus	
Temp, Spectralon 2	Bus	

TABLE VII (continued) Telemetry List

Telemetry Name	Type	Other Details TBD
Temp, Optical Bench, Aft	Bus	
Temp, Optical Bench, Fwd	Bus	
Temp, Optical Bench, Mid	Bus	
Temp, Optics, Front Aa	Bus	
Temp, Optics, Front Af	Bus	
Temp, Optics, Front An	Bus	
Temp, Optics, Front Ba	Bus	
Temp, Optics, Front Bf	Bus	
Temp, Optics, Front Ca	Bus	
Temp, Optics, Front Cf	Bus	
Temp, Optics, Front Da	Bus	
Temp, Optics, Front Df	Bus	
Temp, Optics, Rear Aa	Bus	
Temp, Optics, Rear Af	Bus	
Temp, Optics, Rear An	Bus	
Temp, Optics, Rear Ba	Bus	
Temp, Optics, Rear Bf	Bus	
Temp, Optics Rear Ca	Bus	
Temp, Optics, Rear Cf	Bus	
Temp, Optics Rear Da	Bus	
Temp, Optics, Rear Df	Bus	
Temp, PIN 1	Bus	
Temp, PIN 2	Bus	
Temp, PIN 3	Bus	
Temp, PIN 4	Bus	
Temp, PIN 5	Bus	
Temp, HQED1	Bus	
Temp, HQED2	Bus	
Temp, HQED3	Bus	
Temp, HQED4	Bus	

TABLE VII (continued) Telemetry List

Telemetry Name	Type	Other Details TBD
Temp, Radiator, +Z	Bus	
Temp, Radiator, -Y	Bus	
Temp, Sun Side	Bus	
Temp, TEC1, CJT, Aa	Bus	
Temp, TEC1, CJT, Af	Bus	
Temp, TEC1, CJT, An	Bus	
Temp, TEC1, CJT, Ba	Bus	
Temp, TEC1, CJT, Bf	Bus	
Temp, TEC1, CJT, Ca	Bus	
Temp, TEC1, CJT, Cf	Bus	
Temp, TEC1, CJT, Da	Bus	
Temp, TEC1, CJT, Df	Bus	
Temp, TEC2, CJT, Aa	Bus	
Temp, TEC2, CJT, Af	Bus	
Temp, TEC2, CJT, An	Bus	
Temp, TEC2, CJT, Ba	Bus	
Temp, TEC2, CJT, Bf	Bus	
Temp, TEC2, CJT, Ca	Bus	
Temp, TEC2, CJT, Cf	Bus	
Temp, TEC2, CJT, Da	Bus	
Temp, TEC2, CJT, Df	Bus	
Temp, TEC, HJT, Aa	Bus	
Temp, TEC, HJT, Af	Bus	
Temp, TEC, HJT, An	Bus	
Temp, TEC, HJT, Ba	Bus	
Temp, TEC, HJT, Bf	Bus	
Temp, TEC, HJT, Ca	Bus	
Temp, TEC, HJT, Cf	Bus	
Temp, TEC, HJT, Da	Bus	
Temp, TEC, HJT, Df	Bus	

TABLE VII (continued) Telemetry List

Telemetry Name	Type	Other Details TBD
Cover Open	Bi-L	
Cover Closed	Bi-L	
North Calibration Panel Dep	Bi-L	
North Calibration Panel Sto	Bi-L	
South Calibration Panel Dep	Bi-L	
South Calibration Panel Sto	Bi-L	
Goniometer Sto	Bi-L	
Temp, +Z Radiator PA		
Temp, -Y Radiator	PA	
Temp, Optical Bench (-X)	PA	
Temp, Optical Bench (+X)	PA	
Temp, Optical Bench (Mid)	PA	
Temp, Camera Da, PS	PA	
Temp, Computer	PA	

30.1.1 Engineering Telemetry Format

There are three MISR engineering formats.

a. High rate engineering data packets -- These CCSDS packets are transferred with the science data to the SSR. The engineering packet will carry a unique APID. The currently proposed, but not yet approved packet structure is given in Table VIII (top-level) and Table IX (detailed). Detailed information on the CCSDS packet header and the secondary EOS-AM header is located in the GIIS and will not be repeated herein.

   The total packet length is 1784 bits including CCSDS headers, which meets the 1024 bit minimum required length.

TABLE VIII CCSDS Engineering Packet Proposed Structure (top-level)

	<= 8192 bits
A) CCSDS header	48 bits
B) Data Zone	1736 bits
1) Secondary header	72 bits
2) Instrument Data Field	1664 bits
a) packet description	2 bits
b) General eng data	216 bits
c) Calibration Panel data	104 bits
d) CCD integration time	288 bits
e) Camera eng data	1022 bits
f) Command Verification data	32 bits

TABLE IX Proposed Engineering Data Packet Detailed Structure

A) CCSDS Packet Header (includes APID)	48 bits
B) Secondary Header (includes timing information)	72 bits
C) Engineering Packet description	2 bits
1) Powered Side	1 bit
2) Unobligated	1 bit
D) General Engineering Data	216 bits
1) Mechanism Flags	4 bits
a) Cover unlatch	1 bit
b) Cover closed limit switch	1 bit
c) Cover open limit switch	1 bit
d) Unobligated	1 bit
2) Averaging period for gen eng data	14 bits
3) Currents	56 bits
a) Pre-reg 1	14 bits
b) Pre-reg 2	14 bits
c) Cmd & ctl pwr supply1	14 bits
d) Cmd & ctl pwr supply2	14 bits

TABLE IX (continued) Proposed Engineering Data Packet Detailed Structure

4) Cover Mechanism Data	28 bits
a) Cover MDDA current	14 bits
b) Cover MDDA position	14 bits
5) Temperatures	112 bits
a) Optical bench-fore	14 bits
b) Optical Bench-mid	14 bits
c) Optical Bench-aft	14 bits
d) Sunside Wall	14 bits
e) Radiator position-1	14 bits
f) Radiator position-2	14 bits
g) Radiator position-3	14 bits
h) Radiator position-4	14 bits
6) Unobligated	6 bits
E) Calibration Panel Data	104 bits
1) Mechanism Limit switch Flags	4 bits
a) 1st Diffuser panel stowed	1 bit
b) 1st diffuser panel deploy	1 bit
c) 2nd diffuser panel stow	1 bit
d) 2nd diffuser panel deploy	1 bit

TABLE IX (continued) Proposed Engineering Data Packet Detailed Structure

2) Averaging Period for Cal Panel data	14 bits
3) 1st Diffuser Panel Data	42 bits
a) Panel 1 MDDA current	14 bits
a) Panel 1 MDDA position	14 bits
a) Panel 1 temperature	14 bits
4) 2nd Diffuser Panel Data	42 bits
a) Panel 2 MDDA current	14 bits
a) Panel 2 MDDA position	14 bits
a) Panel 2 temperature	14 bits
5) Unobligated	2 bits
F) CCD Integration Times	288 bits
1) 1st MISR Camera	32 bits
a) Blue band CCD integ	8 bits
b) Green band CCD integ	8 bits
c) Red band CCD integ	8 bits
d) Near-IR band CCD integ	8 bits

TABLE IX (continued) Proposed Engineering Data Packet Detailed Structure

2) 2nd MISR Camera (same as 1st MISR camera)	32 bits
...	
...	
9) 9th MISR camera (same as 1st MISR camera)	32 bits
G) Camera Eng Data	1022 bits
1) Av'g period for camera data	14 bits
2) Data for 1st reported camera	112 bits
a) Front Optics Temp	14 bits
b) Rear Optics Temp	14 bits
c) CCD Temp	14 bits
d) TEC hot junction Temp	14 bits
e) TEC cold junction Temp	14 bits
f) Electronic Chassis Temp	14 bits
g) 5 Volt feed Voltage	14 bits
h) Power Supply Current	14 bits

TABLE IX (continued) Proposed Engineering Data Packet Detailed Structure

3) Data for 2nd reported camera (same as 1st camera)	112 bits
...	
...	
10) Data for 9th camera (same as for 1st camera)	112 bits
H) Command Verification	32 bits
1) Valid Command Count	16 bits
2) Invalid Command Count	16 bits

b. Housekeeping

The MISR Housekeeping telemetry is currently envisioned to contain the same parameters as the packets sent across the high rate interface, but sampled at a 512 bps. Details of content and format are TBD.

c. Critical health & safety

The Critical Health & Safety engineering telemetry comprises a subset of MISR engineering parameters sampled 8 bits every EOS second. The particular engineering data to be included are TBD, but the initial candidates proposed include the camera power supply currents and the nadir radiator temperature.

30.1.2 Science Telemetry Format

As follows:

30.1.2.1 MISR CCD Data

There are 18 types of MISR CCD data, both observation and calibration. Although each will carry a unique APID, they will have the same overall packet structure, as given in Table X (top-level), and XI (detailed). Detailed information on the CCSDS packet header and the secondary EOS-AM header is located in the GIIS and will not be repeated herein.

Each MISR CCD line array includes 1504 active detector elements and 16 blocked-out detector elements (dark current measurement). For all observations, data from all of the 16 blocked out detector elements will be reported. For scientific observations, data from 1456 active (estimate) active detectors will be reported (nadir camera) or 1328 elements (estimate) from the eight non-nadir cameras. For calibration observations, data from all 1504 active detector elements will be reported.

The data packet numbers and lengths will vary based on the averaging of the data within the instrument. When data is reported unaveraged or with 2x2 averaging (see Section 3.), the CCD pixel data numbers will require more than one packet (8008 bits) for a single scan line (single spectral band from a single camera), requiring the data to be reported in 2 or 3 consecutive data packets. The packet lengths will vary but not be less than the 1K bit minimum length requirement. Table XII shows the average lengths of the MISR CCD data packets based on a variety of averaging types of data, given the number of estimated detector element data described in the previous paragraph.

TABLE X Science Data Packet Top Level Structure

	<= 8192 bits
A) CCSDS Packet header	48 bits
B) "Data Zone"	136 to 8144 bits
1) Secondary Header	72 bits
2) Instrument Data Field	64 to 8072 bits
a) MISR Tertiary Hdr	64 bits
b) MISR Pixel DNs	0 to 8008 bits
c) Unobligated	0 or 4 bits

TABLE XI Detailed Science Data Packet Structure

A) CCSDS Packet Header (includes APID)	48 bits
B) Secondary Header (includes timing information)	72 bits
C) MISR Tertiary Header	64 bits
1) Spectral Band ID	2 bits
2) Averaging Mode ID	2 bits
3) Packet Number within scan line	2 bits
4) Scan Line Number (from dark equator)	18 bits
a) 1.1 km scan line	16 bits
b) 275 m scan line (in 1.1km)	2 bits
5) Starting Pixel no. for this packet	12 bits
6) Ending Pixel no. for this packet	12 bits
7) CCD Integration time	8 bits
8) Tertiary header error checking field	8 bits

TABLE XI (continued) Detailed Science Data Packet Structure

D) MISR CCD Pixel Data Numbers (0<=n<=667)	0 to 8008 bits
1) DN for first pixel in packet	12 bits
2) DN for 2nd pixel in packet	2 bits
...	
n) DN for last (nth) pixel in packet	12 bits
E) Unobligated	0 or 4 bits

Table XII Average Length of MISR CCD data packets (K bits)

	AVERAGING MODES			
Data Type	1x1	2x2	4x4	4x1
Science (nadir)	6072	4600	4600	4600
Science (non-nadir)	5560	4216	4216	4216
Calibration	6264	4744	4744	4744

30.1.2.2 Calibration Diode data

In addition to the MISR CCD data, there is a calibration diode packet, with a separate APID, reporting fixed-cal diode data and goniometer data. Since there are only 408 bits of actual data from a single sampling interval from the fixed calibration diode packages, and 120 bits from the same for the goniometer, they are too small for individual packets. The plan is to concatenate data from several sampling intervals for each into a single packet. The total length of these data packets could range from 1760 to 7232 bits. The 7232 bits is derived from sampling the goniometer at 4 times the rate of the fixed-cal diode packages, and packaging 8 consecutive samples of the all the fixed calibration diode data and 32 consecutive samples of the goniometer data (a 64 msec interval) together.

The format for the packet structure is given in Table XIII (top-level), and Table XIV (detailed). Detailed information on the CCSDS packet header and the secondary EOS-AM header is located in the GIIS and will not be repeated herein.

TABLE XIII Calibration Diode Data Top Level Structure

<=8192 bits

A) CCSDS Packet header	48 bits
B) "Data Zone"	1712 to 7184 bits
1) Secondary Header	72 bits
2) Instrument Data Field	1640 to 7112 bits
a) Packet Description	8 bits
b) Fixed cal'n radiometry	n*408 bits (n= 4 or 8)
c) Goniometer Data	m* 120 bits (m=0, 4, 8, 16, or 32)

TABLE XIV Calibration Diode Data Detailed Packet Structure

A) CCSDS Packet Header (includes APID)	48 bits
B) Secondary Header (includes timing information)	72 bits
C) Packet Description	8 bits
1) Number of fixed calibration reports (4 or 8)	4 bits
2) Number of goniometer reports (0, 4, 8, 16, or 32)	4 bits
D1) Fixed Calibration Radiometry	408 bits
1) Averaging period for fixed cal'n rad'y	14 bits
2) 1st fixed PIN diodes calibration pkg	70 bits
a) Blue diode radiometry	14 bits
b) Green diode radiometry	14 bits
c) Red diode radiometry	14 bits
d) Near IR diode radiometry	14 bits
e) Temperature	14 bits
3) 2nd fixed PIN diode calibration pkg (same as first PIN diode list)	70 bits
4) 3rd fixed PIN diode calibration pkg (same as first PIN diode list)	70 bits
5) 4th fixed PIN diode calibration pkg (same as first PIN diode list)	70 bits

TABLE XIV (continued) Calibration Diode Data Detailed Packet Structure

6) Blue high-QE diodes calibration pkg	28 bits
a) Diode Radiometry	14 bits
b) Temperature	14 bits
7) Green high-QE diodes calibration pkg	28 bits
(same as blue high-QE diodes)	
8) Red high-QE diodes calibration pkg	28 bits
(same as blue high-QE diodes)	
9) Near-IR high-QE diodes calibration pkg	28 bits
(same as blue high-QE diodes)	
10) Unobligated	2 bits
D2) Fixed Calibration Radiometry (same as D1)	408 bits
...	
...	
...	
Dn) Fixed Calibration Radiometry (same as D1) n = 4 or 8	408 bits

TABLE XIV (continued) Calibration Diode Data Detailed Packet Structure

E1)	Goniometer Data	120 bits
1)	Goniometer mechanism flags	2 bits
a)	Goniometer unlatch flag	1 bit
b)	Goniometer stowed limit switch	1 bit
2)	Averaging period for goniometer data	14 bits
3)	Goniometer mechanism data	28 bits
a)	Goniometer MDDA current	14 bits
b)	Goniometer MDDA position	14 bits
4)	Goniometer calibration radiometry	70 bits
a)	Blue PIN diode radiometry	14 bits
b)	Green PIN diode radiometry	14 bits
c)	Red PIN diode radiometry	14 bits
d)	Near IR PIN diode radiometry	14 bits
e)	Temperature	14 bits
5)	Unobligated	6 bits

TABLE XIV (continued) Calibration Diode Data Detailed Packet Structure

E2)	Goniometer Data (same as E1)	120 bits
...		
...		
...		
Em)	Goniometer Data (same as E1)	120 bits

30.1.5 Test Packet Format

This CCSDS packet comprises a pre-determined data (content and length) packet for use in integration and test of MISR with the EOS -AM spacecraft. The details are TBD.

30.2 Derived Function Generation Requirements

TBD

30.3 Status Determination Requirements

TBD

30.3.1 Mode Definition

TBS

30.3.2 Event/Mode-Change Detection

TBD

30.4 Uplink Verification Requirements

TBD

30.4.1 Command Verification

The uplink of the 16 day table of MISR activities will be verified by Cyclic Redundancy Check (CRC) TBR.

30.4.2 Microprocessor Load Verification

MISR Microprocessor load transmissions are verified by the FOT with a cyclic Redundancy Check (CRC) TBR.

The MISR PI verifies microprocessor loading in the instrument. (TBD)

30.5 Health and Safety Monitoring Requirements

MISR health and safety are monitored by the FOT on-line crew. The MISR PI identifies the critical instrument health and safety parameters along with their limits. The FOT will monitor the housekeeping data in real-time when available during TDRS contacts, and shall monitor near real time health and safety using housekeeping data dumped from the SSR once per day (one orbit) - this requirement is TBR by GSFC. (See real-time requirements appendix section for details). The MISR PI has the capability to monitor MISR health and safety at his facility.

30.5.1 Limit Check Requirements

Limit Checks of the Telemetry will be made by the FOT per criteria in the alarm limit database, and procedures, including limits, limit gradients. Limit checks will be made for all real-time telemetry. Remainder TBD

30.5.2 Alarm Requirements

Alarms are required when yellow or red limits are reached, or when the limit gradient is exceeded. Other conditions are TBD

30.6 Display Generation Requirements

TBD

30.6.1 Parameter Calibration

TBD

30.6.2 CRT Page Display

TBD

30.6.3 Strip-Chart Recorder Displays

TBD

30.6.4 Hardcopy Outputs

TBD

30.7 EOC Telemetry Database Requirements

TBD

30.7.1 Telemetry Function Definition

TBD

30.7.2 Derived Function Definition

TBD

30.7.3 Mode/Event Definition

TBD

30.7.4 Limit Check Thresholds

TBD

30.7.5 Alarm Generation Criteria

TBD

30.7.6 Command Verification Criteria

TBD

30.7.7 Display Definition

TBD

30.7.8 Calibration Parameters

TBD

APPENDIX IV

40 OPERATIONAL ACTION REQUIREMENTS

Specific MISR requirements for operational action under specified conditions are understood to be as follows:

40.1 Contingency Action Requirements

TBD

40.1.1 Emergency Power-Down

The emergency power-down sequences for MISR are TBD. Preliminary desires are for MISR to be put into Standby Mode when entering or leaving the SAFE mode.

40.1.2 Limits/Alarm Reaction

Out-of-limits conditions are reported to the MISR Principal Investigator. Out of limit conditions are (TBD).

40.1.3 Spacecraft Safe Mode (SCC running)

TBD.

40.1.4 SCC Halted

TBD

40.1.5 Other On-Board Processors Halted

TBD

40.1.6 Uplink Transmission Failure

TBD

40.2 Preactivation Requirements

TBD

40.3 Spacecraft Maneuver Accommodation

The plan for MISR operation during Spacecraft maneuvers is TBD.

40.3.1 Orbit Adjust

TBD

40.4 Alignment/Calibration Requirements

TBD

40.5 Special Observation Requirements

The following requirements are necessary for the vicarious calibration operations:

TBD

APPENDIX V

50 PLANNING AID REQUIREMENTS

A standard set of orbital parameters and selected orbital events is generated by the FDF and transferred to the EOC through IST where the MISR PI can access the data for planning purposes and for use in the generation of any additional unique planning aids required. The accuracy of the data is TBD (the best possible). The MISR team would like the navigational accuracy to 1 second, as early as is possible for local mode selection. This has been given as accurate up to 1 month in advance.

The following are example summaries of the long term and short term data to be provided. The actual data to be selected for MISR use is TBD. Details associated with these TBD parameters are defined in TBD.

50.1 Parameter Definition

TBD

50.1.1 Long Term

The long term aids to be used by MISR are TBD.

The following is an example summary of long term aids:

EOS-AM Orbital Characteristics

a. Brouwer mean orbital elements
b. Solar beta angle
c. Direction of S/C flight
d. Local mean Sun time
e. S/C ascending node
f. Length of TBD day and night
g. Length of S/C day and night

Ephemeris:

a. Solar
b. Lunar
c. Planetary

Star Catalog

a. Ascending Node Prediction
b. Longitudinal spacing and precession rate.

Solar Eclipse predictions.

50.1.2 Short Term

The short term aids to be used by MISR is TBD.

The following is an example summary of short term aids:

a. Spacecraft ephemeris
b. Brouwer mean orbital elements.
c. Predicted Orbit Adjust time
d. Solar Eclipse predicts.

Orbital Events
a. Ascending and descending node
b. Spacecraft nadir sunrise and sunset terminator crossing
c. Terminators (both) for TBD degree line of sight at TBD altitude
d. South Atlantic Anomaly entrance and exit.
e. Sunset and Sunrise at TBD altitude.
f. Yaw and elevation angle to sun TBD-seconds before sunset
g. Yaw angle to sun at sunrise for TBD altitude.
h. Grazing sunrise begin/sunset end event
i. Grazing sunrise end event

Solar Beta Angle.

50.2 Parameter Specifications

The MISR unique specifications for planning aid parameter are TBD

50.2.1 Information Accuracy

TBD.

50.2.2 Data Precision

TBD.

50.2.3 Data Frequency

TBD.

50.3 Information Handling Requirements

The MISR PI accesses planning and scheduling tools via his IST. Details are TBD.

50.3.1 Format

Standard IST/EOC interface file format is TBD.

50.3.2 Packaging

Standard (i.e., time-annotated date file) is TBD.

50.4 Access Timeline Requirements

MISR accesses planning and scheduling aid data on a TBD basis.

50.4.1 Lead Time

TBD (i.e., long term parameters consistent with long-term science planning schedule; short-term parameters TBD days/hours beforehand).

50.4.2 Retention

TBD (i.e., long term parameter projections throughout mission, short-term parameters until current).

APPENDIX VI

60 SPECIAL ACTIVATION REQUIREMENT

Specific requirements for activation of MISR are understood to be as follows:

60.1 Commanding Requirements

Commands required for activation and normal operations are predefined in the database (I&T and EOC).

60.1.1 Special Command Sequences

At least TBD command sequences are required for the initial activation checkout steps planned for MISR.

60.1.2 Special Command Constraints

At least TBD command sequences are required for the initial activation checkout steps planned for MISR. These command sequences may or may not be the same for contingency recovery MISR activation. These command sequences will be generated as part of the planning for the activation.

60.1.3 Real-time Command Generation

There are TBD special real-time command generation requirements for MISR activation. All normal real-time command generation capabilities (defined in 20.4) are required.

60.1.4 Special Command Transmission Requirements

TBD.

60.2 Telemetry Processing Requirements

TBD

60.2.1 Special Telemetry Formats

There are no special telemetry formats identified for MISR.

60.2.2 Special Processing Functions

TBD

60.2.3 Special Processing Parameters

TBD

60.2.4 Special Displays

MISR science functions are to be displayed in TBD.

60.2.5 Strip Chart Recorder

TBD

60.3 Remote Support Coordination Requirements

TBD

60.3.1 Quick-look Playback Handling

Access to quick-look data is provided via the TBD.

60.3.2 Voice Communications

Voice communications are required between the MISR location within the EOC (at the time of instrument activation on-orbit) and the MISR remote terminal facility (SCF) at JPL throughout MISR initial and contingency recovery activations.

60.4 Facility Requirements

The MISR PI and/or designated representative(s) require access to TBD standard instrument activation location within the EOC, and standard office-type working space and services for a TBD activation staff throughout the activation period.

APPENDIX VII

70 ABBREVIATIONS

ACE	Attitude Control Electronics
ADAC	Attitude Determination and Control
APID	Application Process Identifier
ARC	Ames Research Center
ARIA	Advanced Range Instrumented Aircraft
ASTER	Advanced Spaceborne Thermal Emission and Reflection
ATC	Absolute Time Command
BDD	Baseline Description Document
BDU	Bus Data Unit
C&DH	Command & Data Handling
CADU	Channel Access Data Unit
CCSDS	Consultative Committee For Space Data Systems
CERES	Clouds and Earth's Radiant Energy System
CLTU	Command Link Transmission Unit
CMD	Command
COMM	Communications Subsystem
CRC	Cyclic Redundancy Check
CSMS	Communication and System Management Segment
CTIU	Command and Telemetry Interface Unit
C&T	Command and Telemetry
DAAC	Distributed Active Archive Center
DADS	Data Archive and Distribution System
DAR	Data Acquisition Request
DAS	Direct Access System
DB	Direct Broadcast
DCU	Data Control Unit
DDL	Direct Downlink
DMU	Data Memory Unit
DP	Direct Playback
DSN	Deep Space Network
ECOM	EOS Communication Network
ECS	EOSDIS Core System
EDOS	EOS Data and Operations System
EDU	Error Detection and Correction Data Unit
EOC	EOS Operations Center

EOS	Earth Observing System
EOS-AM	Earth Observing System - 10:30 descending node orbit
EOSDIS	EOS Data and Information System
EPS	Electrical Power System
ESDIS	Earth Science Data and Information System
ESN	ESDIS Science Network
FDF	Flight Dynamics Facility
FDIR	Failure Detection, Isolation and Recovery
FIFO	First In First Out
FOS	Flight Operations Segment
FOT	Flight Operations Team
FOV	Field of View
FPSG	Flight Planning and Scheduling Group
GIIS	General Instrument Interface Specification
GN	Ground Network
GN&CS	Guidance, Navigation and Control Subsystem
GSFC	Goddard Space Flight Center
HGA	High Gain Antenna
I & T	Integration and Test
ICC	Instrument Control Center
ICD	Interface Control Document
IFOU	Instrument Flight Operations Understanding
IMS	Information Management System
IST	Instrument Support Terminal
IWG	Investigator Working Group
JPL	Jet Propulsion Laboratory
Kbps	Kilobits per Second
KSA	Ku-Band Single Access
LTIP	Long Term Instrument Plan
LTSP	Long Term Science Plan
Mbps	Megabits per Second
MISR	Multi-angle Imaging Spectro Radiometer
MO&DSD	Mission Operations and Data Systems Directorate
MODIS	Moderate Resolution Imaging Spectrometer
MOM	Mission Operations Manager
MOPITT	Measurements of Pollution in the Troposphere
MSFC	Marshall Space Flight Center

NASA	National Aeronautics and Space Administration
NASCOM	NASA Communications Network
NCC	Network Control Center
NIR	Near Infrared
NSI	NASA Science Internet
P/B	Playback
PGS	Product Generation System
PI	Principal Investigator
PSCN	Program Support Communications Network
R/T	Real-Time
RAM	Random Access Memory
ROM	Read only Memory
RS	Reed-Solomon
RTCS	Relative Time Command Sequence
SCC	Spacecraft Controls Computer
SCF	Science Computing Facility
SDF	Software Development Facility
SDPS	Science Data Processing Segment
SCT	Stored Command Table
SFE	Science Formatting Equipment
SMA	S-Band Multiple Access
SMC	System Management Center
SN	Space Network
SSA	S-Band Single Access
SSR	Solid State Recorder
STGT	Second TDRSS Ground Terminal
SWIR	Short Wave Infrared
TBD	To Be Determined
TBR	To Be Reviewed
TBS	To Be Supplied
TDRS	Tracking and Data Relay Satellite
TDRSS	Tracking and Data Relay Satellite System
TL	Team Leader
TLM	Telemetry
TMON	Telemetry Monitor
TOD	Time of Day
TONS	TDRSS Onboard Navigation System
USCCS	User Spacecraft Clock Calibration System
UTC	Universal Time Code

VCID ..... Virtual Channel Identifier
VCDU ..... Virtual Channel Data Unit
VNIR ..... Visible and Near Infrared

WOTS ..... Wallops Orbital Tracking Station
WSGT ..... White Sands Ground Terminal

Next Assembly	Used on
20008500G1	EOS–AM

First Application
EOS–AM

Revisions		Rev C	
Ltr	Description	Date	Approved
Initial Issue		1–15–93	CM/GSR
Rev A	Revised per ECN–EOS0032	4–1–93	CM/GSR
Rev B	Revised per ECN–EOS0048	7–15–93	CM/GSR
Rev C	Revised per ECN–EOS0061	8–23–93	CM/GSR

Revision Record Continued on Sheet _____

Contract No.	NAS5–32500
Written	Brenda Wilson
Date	4–1–93
Approved	N. Koepp–Baker
Date	4–1–93
Approved	
Date	
Issue	G. Rauscher
Date	4–1–93

MARTIN MARIETTA

Martin Marietta Astro Space
East Windsor, NJ
Valley Forge, PA

Interface Control Drawing,
Earth Observing System AM Spacecraft to
Multi–angle Imaging SpectroRadiometer

Size	Code Ident No.	
A	49671	20008830

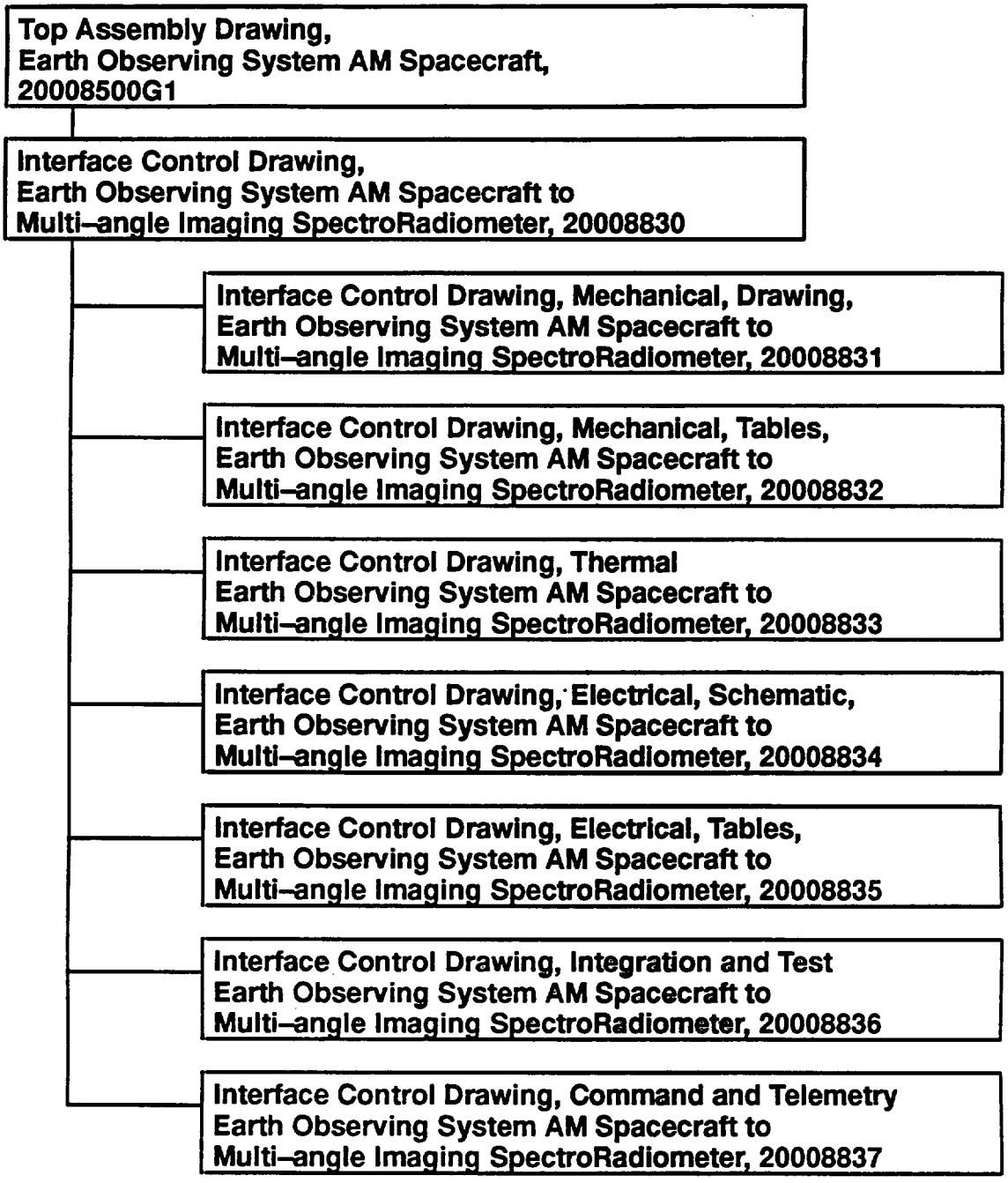

Figure 1. Drawing Tree

Table I. ICD Revision Status

20008831 MICD Drawing		20008832 MICD Tables		20008833 TICD		20008834 EICD Schematic		20008835 EICD Tables		20008836 I&T ICD		20008837 C&DH ICD	
Issue	Date	Issue	Date	Issue	Date	Issue	Date	Issue	Date	Issue	Date	Issue	Date
Initial	6–29–93	Initial	3–29–93	Initial	12–18–92			Initial	08–27–93				

Size A | Code Ident No. 49671 | 20008830 | Sheet 3

ASD–EW 2051 3–89

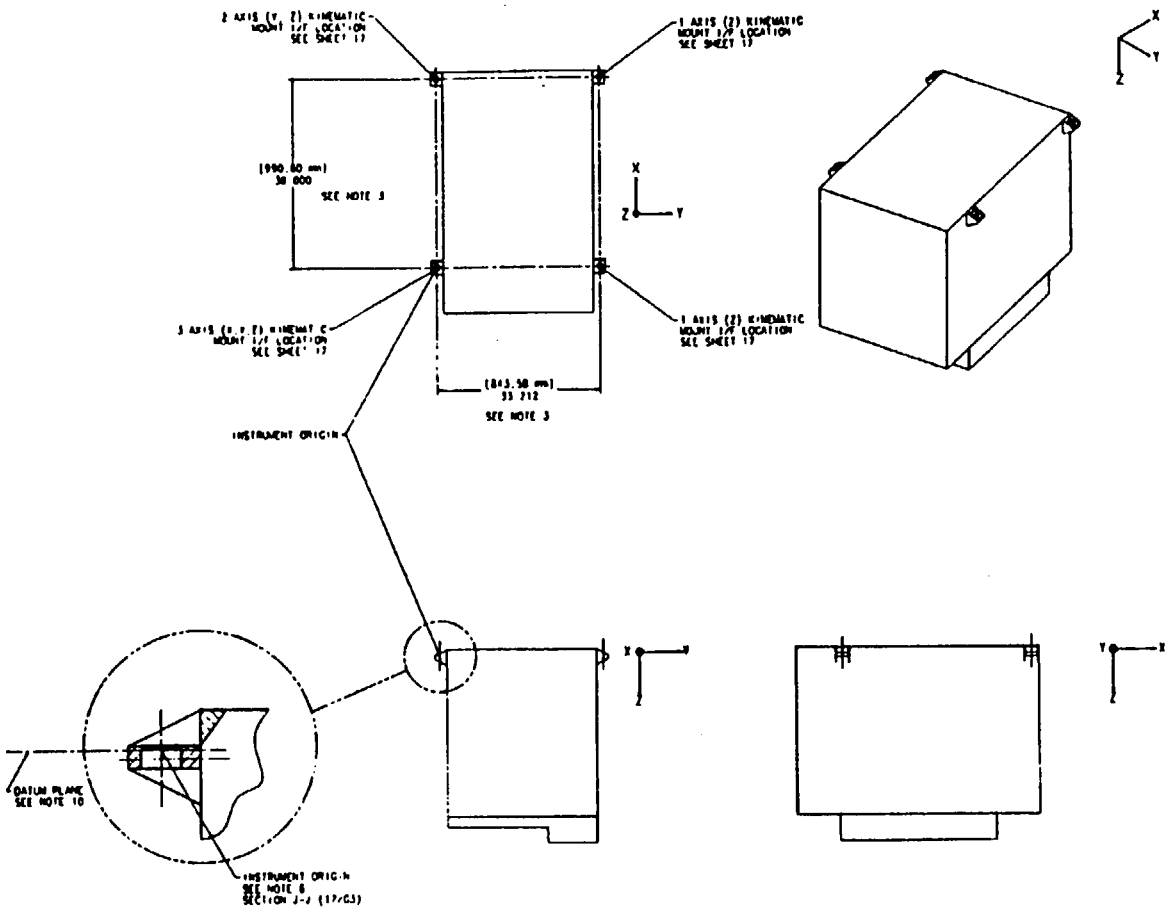

OUTLINE DRAWING - LAUNCH CONFIGURATION

NOTES

1. THE MISR MECHANICAL INTERFACE INFORMATION IS CONTAINED IN TWO DRAWINGS, THIS DRAWING AND 20008832, MICD TABLES.
2. THE SPACECRAFT COORDINATE AXES ARE SHOWN. THE INSTRUMENT COORDINATE AXES ARE PARALLEL TO THE SPACECRAFT AXES. THE RELATIONSHIP BETWEEN THE INSTRUMENT AND SPACECRAFT COORDINATE AXES IS SHOWN IN 20008832, MICD TABLES, FIGURE 1 AND TABLE 1.
3. LOCATION OF MOUNTING HOLES WILL BE CONTROLLED BY COORDINATED TOOLING AND HELD TO DIMENSIONS SHOWN.
4. THERMAL BLANKET (MULTI-LAYER INSULATION) ENVELOPE NOT OF EXCEED (12.7 MM) 0.50 IN. GREATER THAN THE STRUCTURE DIMENSION.
5. MISR ALIGNMENT CUBE LOCATION (TBD 001).
6. THE INSTRUMENT ORIGIN IS AT THE CENTER OF THE MOUNTING HOLE IN THE X-Y PLANE DEFINED BY THE BOTTOM OF THE BEARING RACE OF THE 3 AXIS KINEMATIC MOUNT.

(CONTINUED ON SHEET 2)

TABLE OF CONTENTS (SEE NOTE 1)

TITLE	SHEET
APPROVAL SIGNATURES	1
OUTLINE DRAWING - LAUNCH CONFIGURATION	2
OUTLINE DRAWING - LAUNCH CONFIGURATION (CONTINUED)	3
OUTLINE DRAWING - ON ORBIT CONFIGURATION	4
INSTRUMENT/SPACECRAFT ASSEMBLY	5
SPACECRAFT LAUNCH CONFIGURATION	6
SPACECRAFT LAYOUT	7
INSTRUMENT VOLUME - APERTURE COVER & LOUVER	8
INSTRUMENT VOLUME - THERMAL BLANKET	9
INSTRUMENT VOLUME - STRUCTURE	10
DEFINED FIELDS OF VIEW	11
CAL HORIZONS FIELDS OF VIEW	12
SPACE LIGHT FIELDS OF VIEW	13
DEFINED FIELDS OF VIEW ASSEMBLY	14
CAL HORIZONS FIELDS OF VIEW ASSEMBLY	15
SPACE LIGHT FIELDS OF VIEW ASSEMBLY	16
MOUNTING DEFINITION	17
MOUNTING HARDWARE DEFINITION	18
ELECTRICAL HARDWARE DEFINITION	19
THERMAL HARDWARE DEFINITION	20
GROUND SUPPORT EQUIPMENT ATTACHMENT	21
PER/TBD LIST	22

IN ADDITION TO ECN AND CCB APPROVALS, ALL CHANGES ON THIS DRAWING SHALL HAVE THE APPROVAL AND THE FULL AGREEMENT OF THE PARTIES LISTED BELOW

APPROVAL SIGNATURES

NO.	DESIGNATION	DATE	DESIGNATION	DATE	DESIGNATION	DATE
	[illegible]		[illegible]		[illegible]	

GE Astro Space

INTERFACE CONTROL DRAWING, MECHANICAL, EARTH OBSERVING SYSTEM AM SPACECRAFT TO MULTI-ANGLE IMAGING SPECTRO-RADIOMETER

E 49671 20008831

SCALE 1:8 SHEET 1 of 21

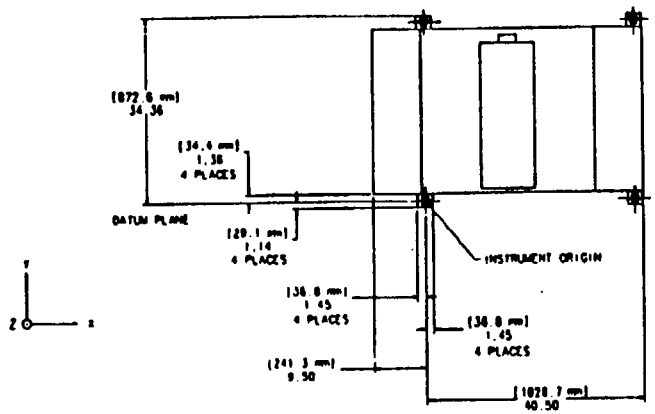

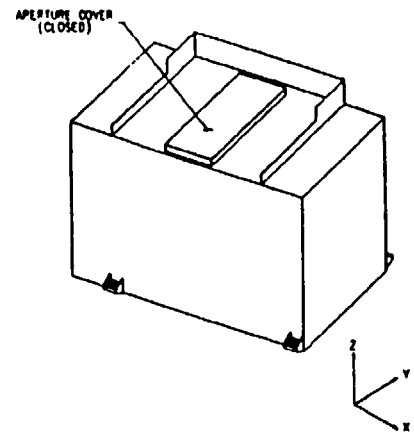

(NOTES CONTINUED)

7. THIS BOU SERVICES CERES, MISR AND MOPITT.

8. SHEET 4 SHOWS MISR, ITS ACCOMMODATION EQUIPMENT, ADJACENT INSTRUMENT ASSEMBLIES AND PART OF THE SPACECRAFT STRUCTURE. OTHER INSTRUMENTS, EQUIPMENT AND STRUCTURE ARE NOT SHOWN FOR SIMPLICITY. FUSE DISTRIBUTION BOARD, INTERFACE CONNECTOR PANEL AND HEATER CONTROL ELECTRONICS ARE (TBD 002).

9. POTENTIAL LOUVER VOLUME SHOWN ONLY ON SHEET 7

10. DATUM PLANE IS DEFINED BY THE BEARING SEATS OF THE 3, 2 AND A SELECTED 1 (TBD 003) AXIS MOUNTS.

11. KINEMATIC MOUNT ACCOMMODATES BEARING ROTATION FROM NOMINAL POSITION AS FOLLOWS:
INSTRUMENT CONTRIBUTION: 1.50°
SPACECRAFT CONTRIBUTION: 1.75°
COMBINED DEFORMATIONS, INCLUDING THERMAL DISTORTION, DYNAMIC DEFLECTION, AND MANUFACTURING TOLERANCES, SHALL NOT CAUSE BEARING TO EXCEED THIS ROTATION IN ANY DIRECTION.

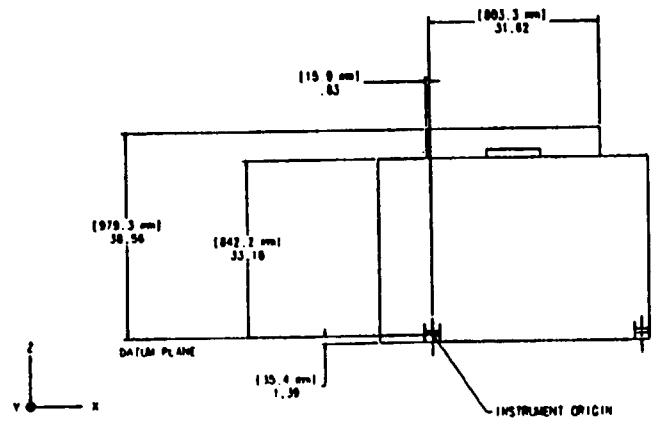

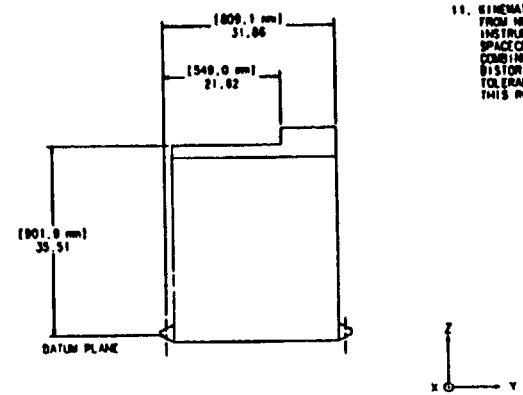

OUTLINE DRAWING - LAUNCH CONFIGURATION (CONT'D)

20008831
30 August 1993

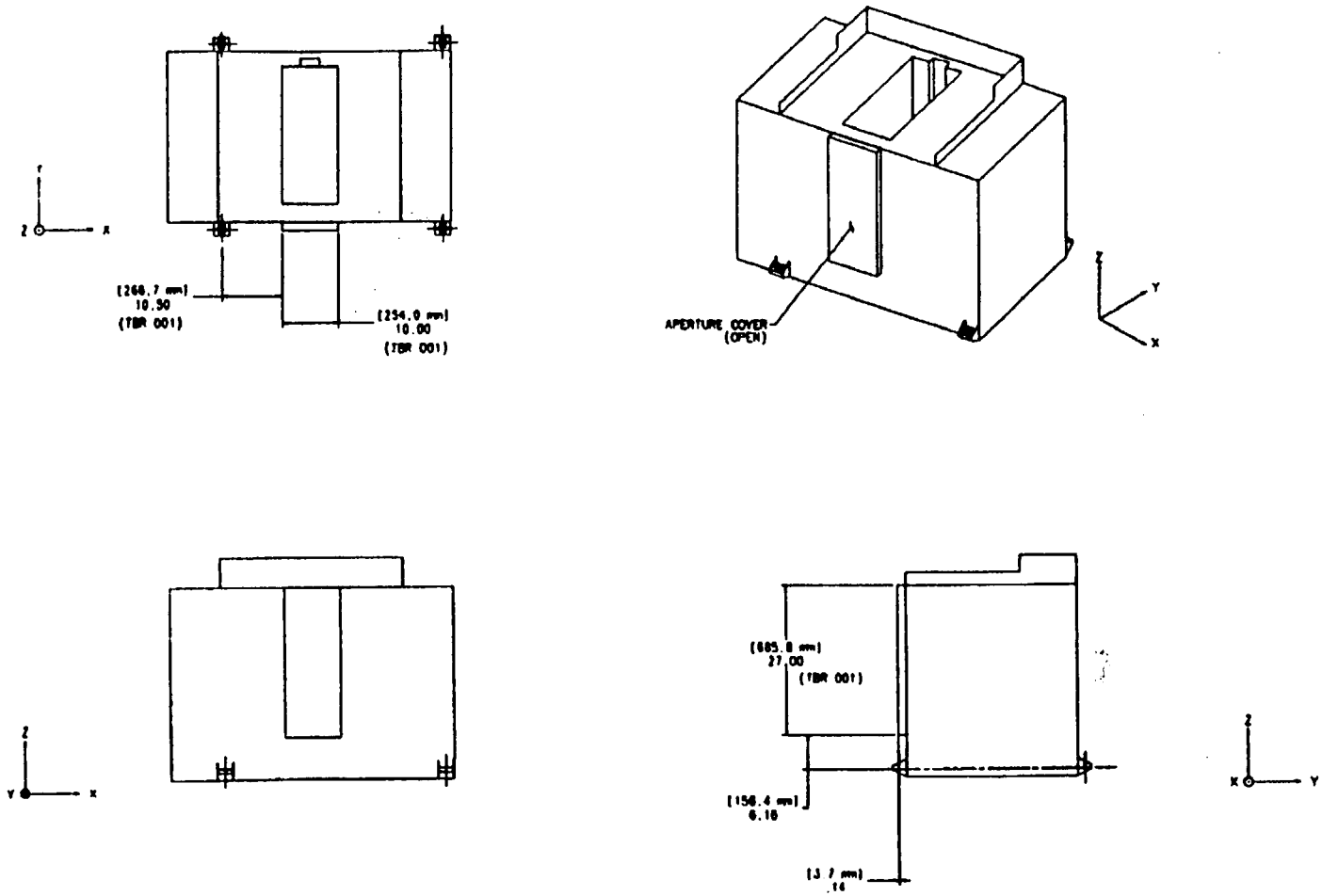

OUTLINE DRAWING - ON ORBIT CONFIGURATION

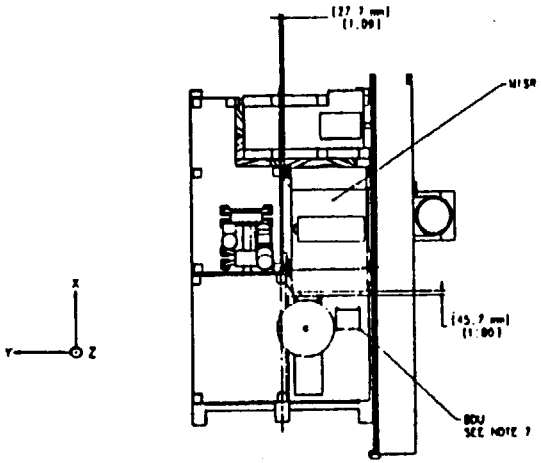

LAUNCH CONFIGURATION

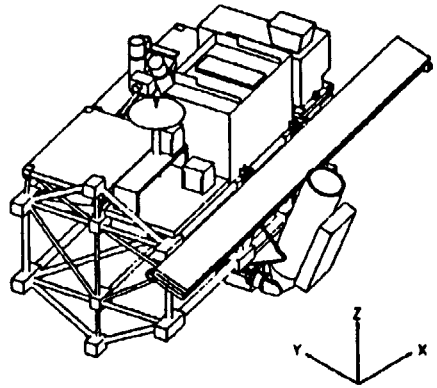

LAUNCH CONFIGURATION

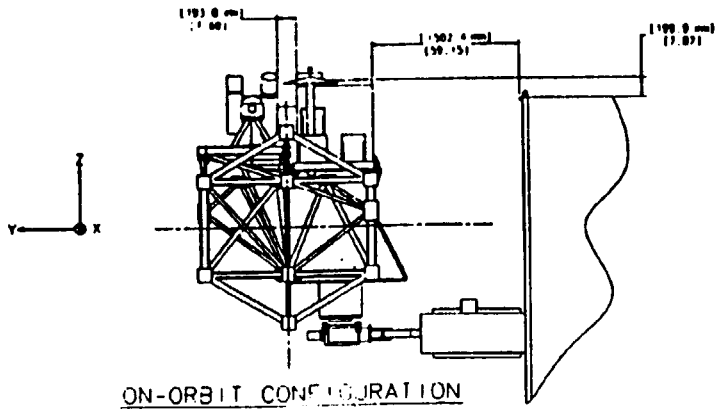

ON-ORBIT CONFIGURATION

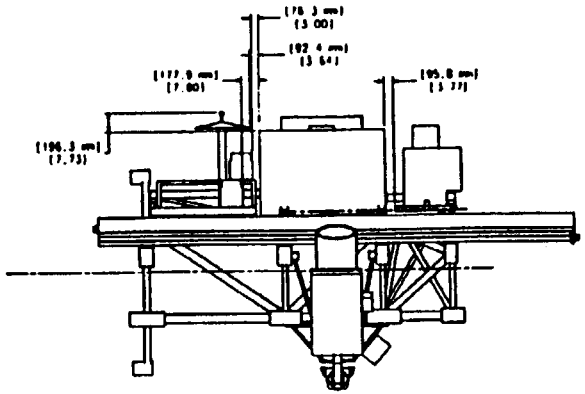

LAUNCH CONFIGURATION

INSTRUMENT/SPACECRAFT ASSEMBLY

(SEE NOTE 8)

20008831
30 August 1993

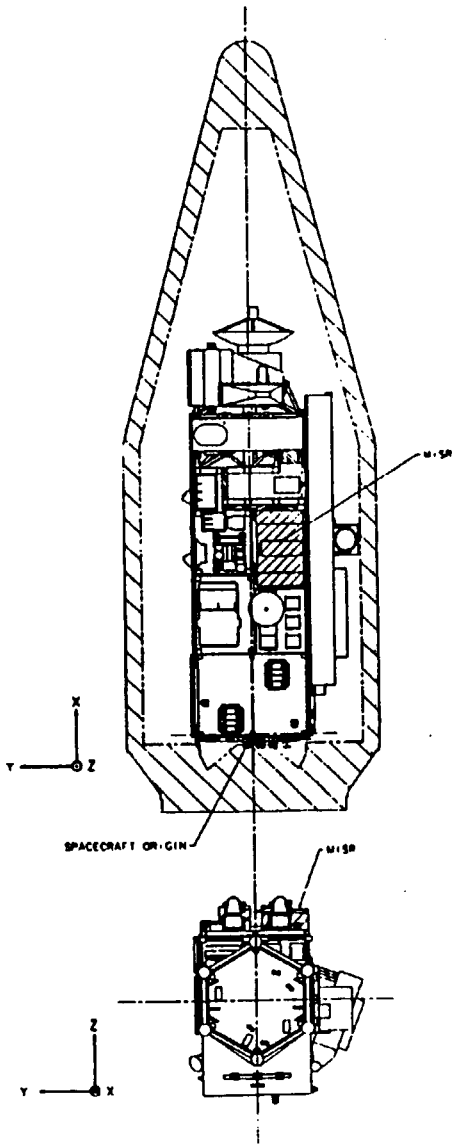

END VIEW
(FAIRING NOT SHOWN FOR CLARITY)

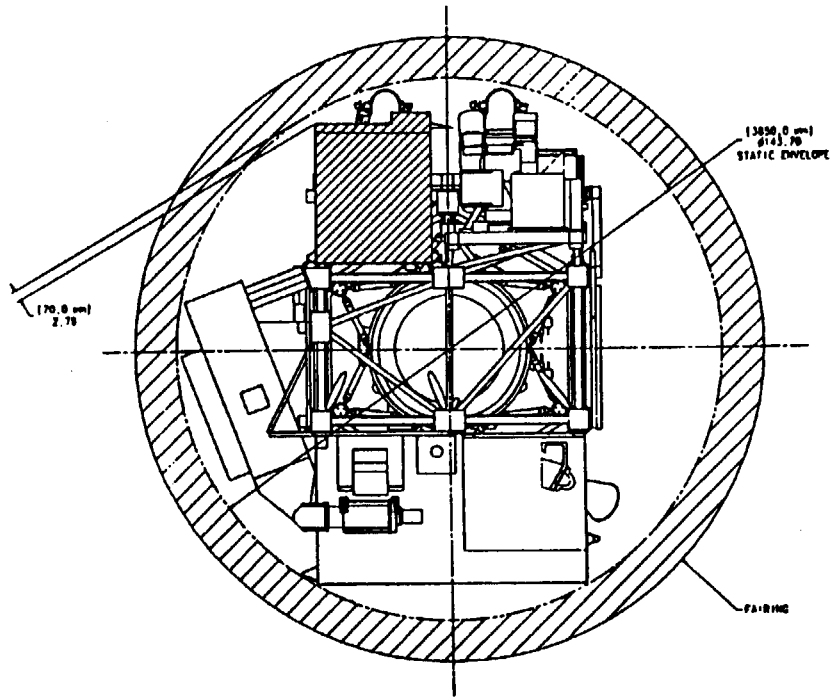

SECTION A-A
SCALE 1/10

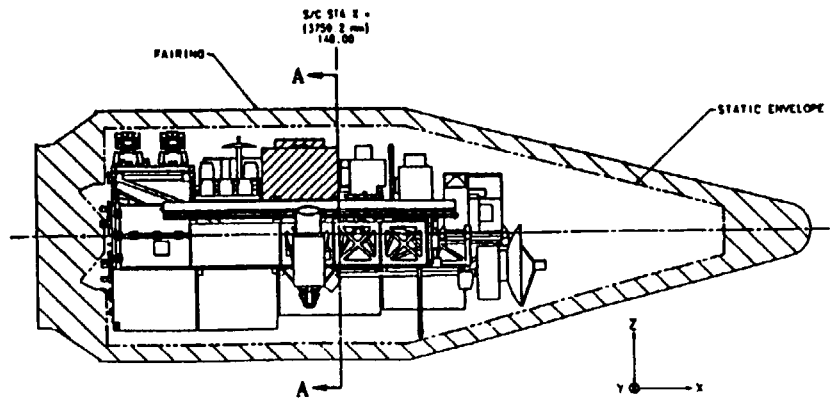

LAUNCH CONFIGURATION

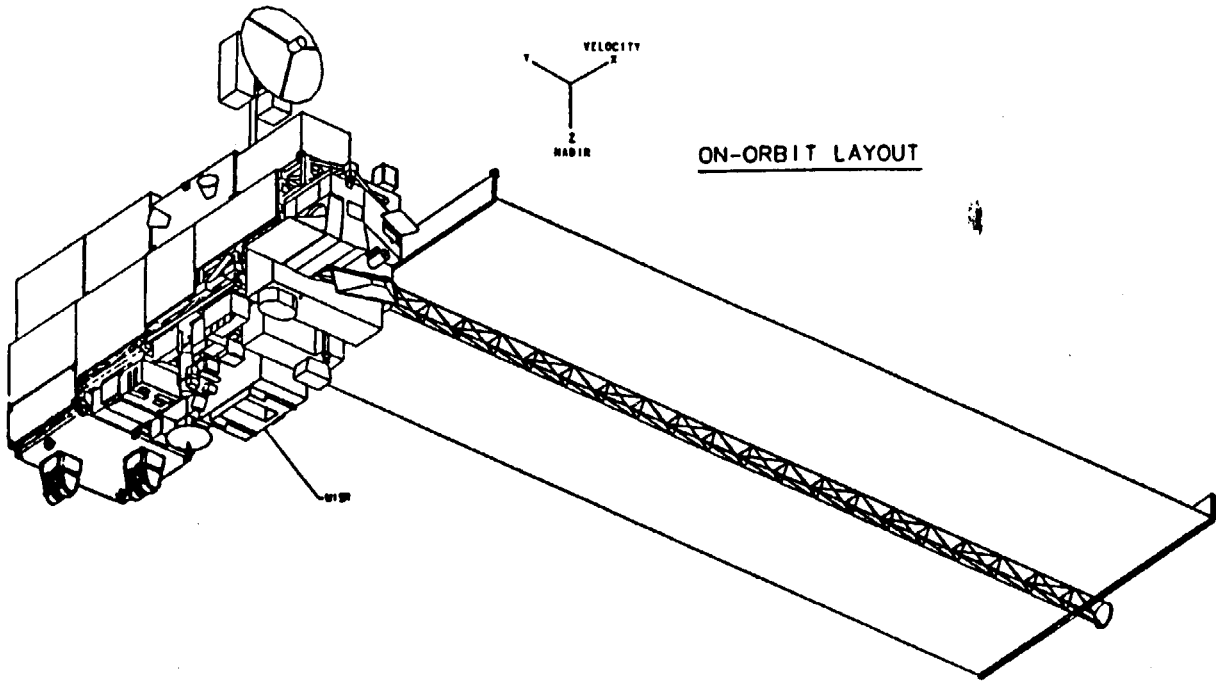

ON-ORBIT LAYOUT

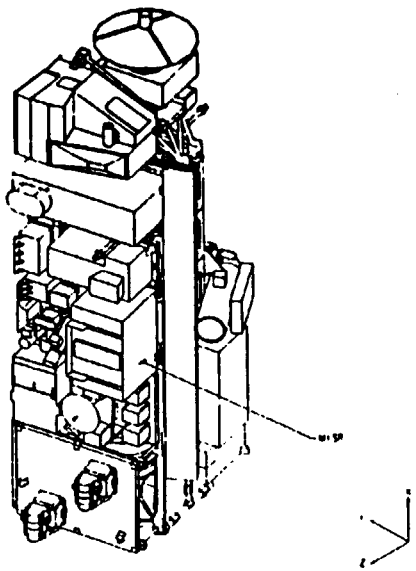

LAUNCH LAYOUT

SPACECRAFT LAYOUT

20008831
30 August 1993

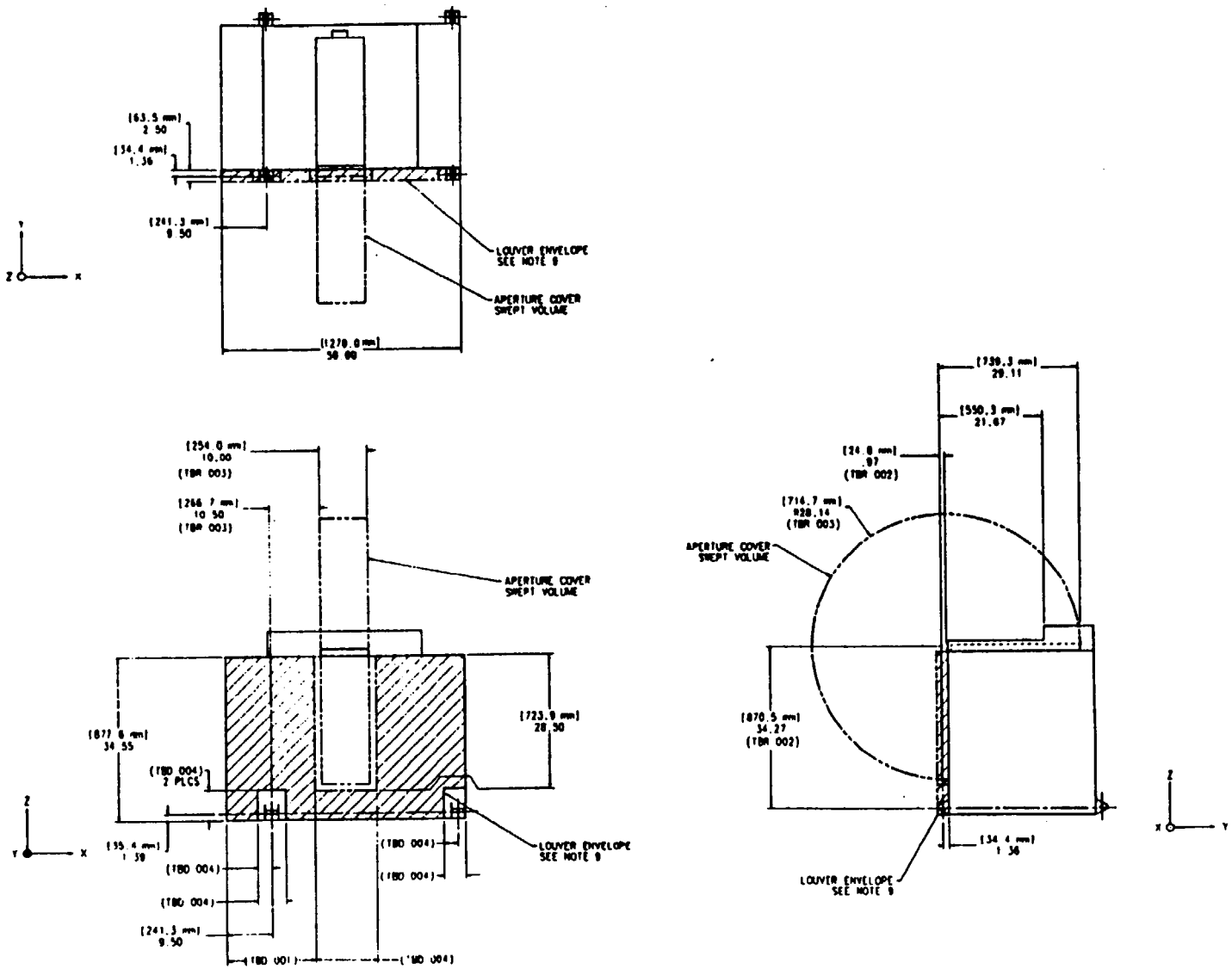

INSTRUMENT VOLUME - APERTURE COVER AND LOUVER

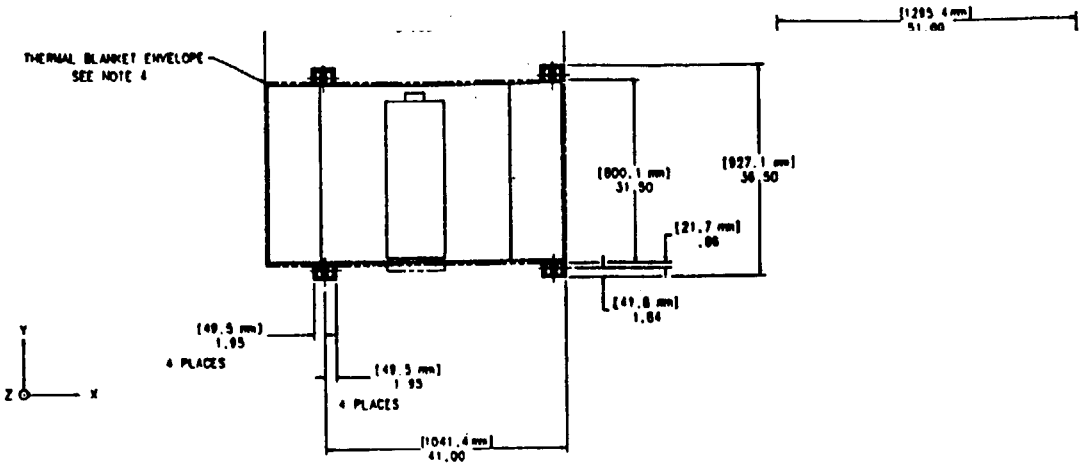

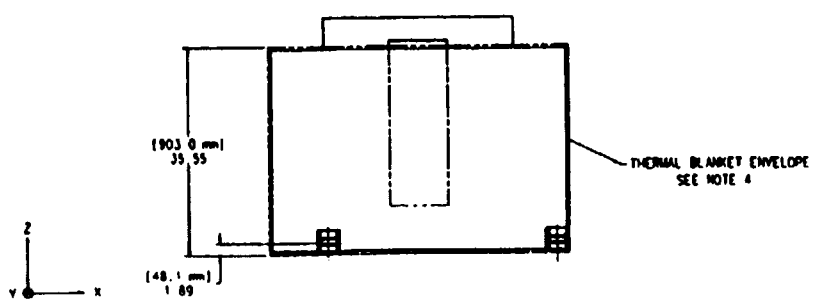

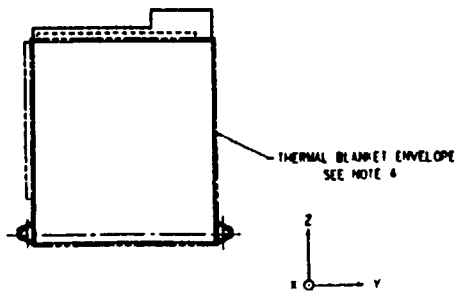

INSTRUMENT VOLUME - THERMAL BLANKET

20008831
30 August 1993

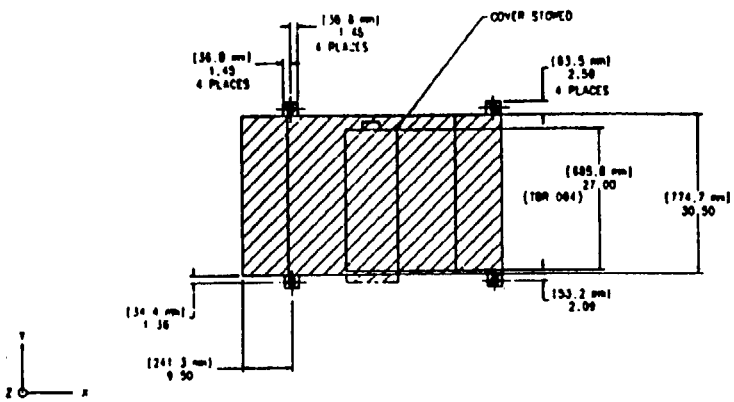

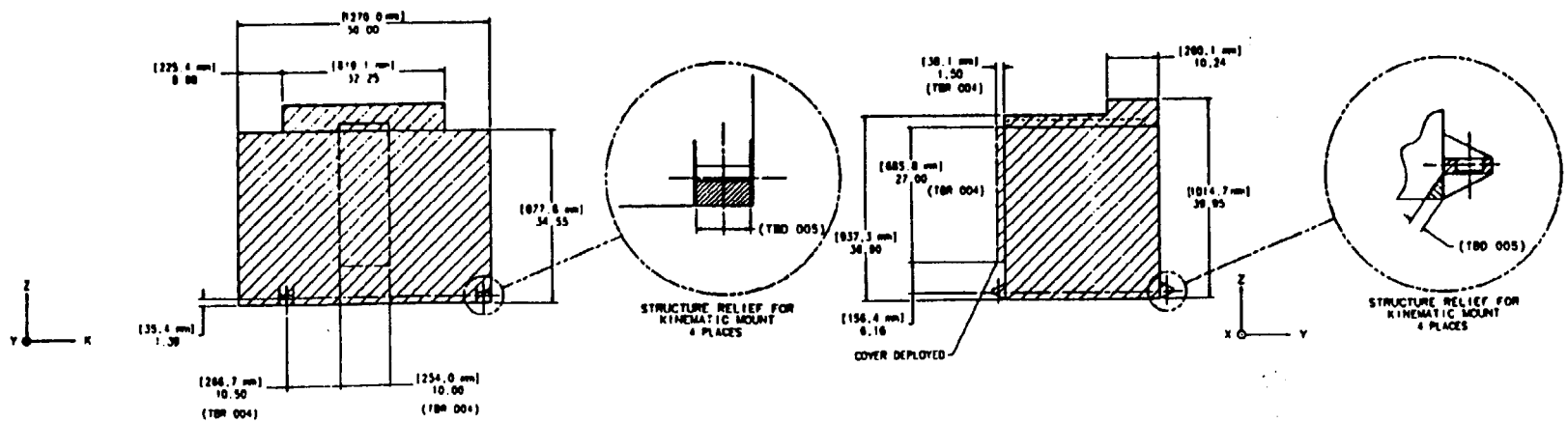

INSTRUMENT VOLUME - STRUCTURE

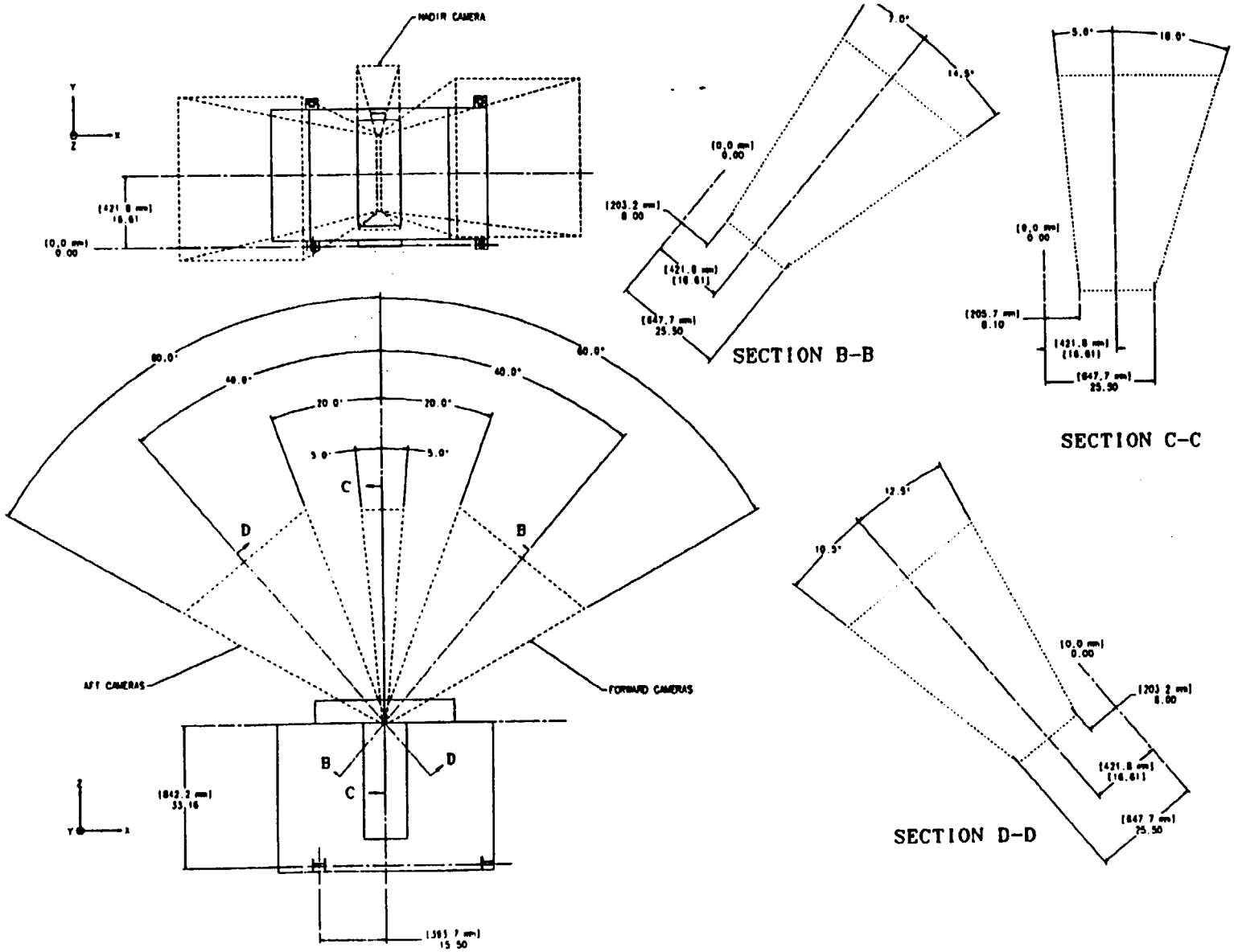

SCIENCE FIELDS OF VIEW

20008831
30 August 1993

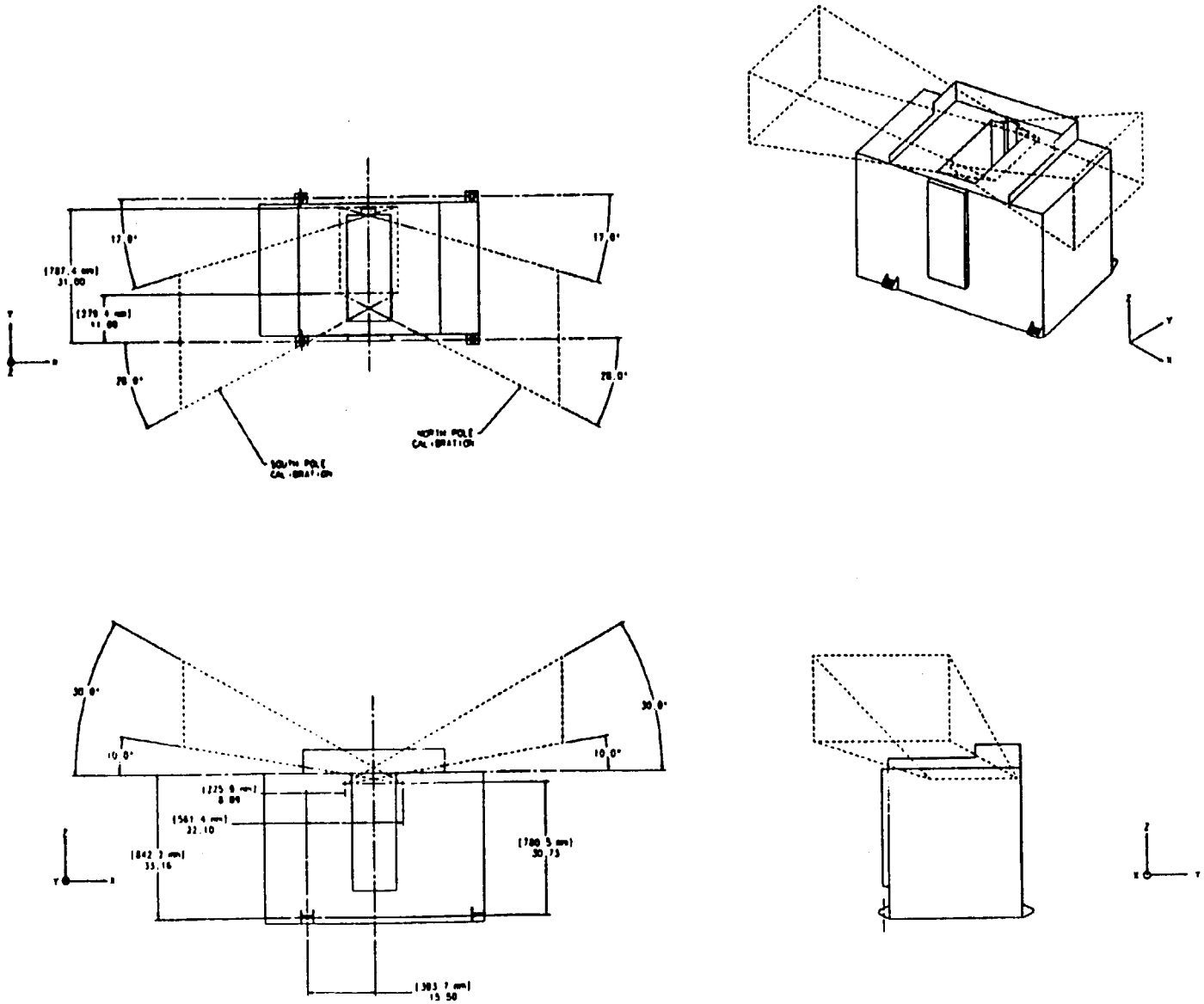

CALIBRATION FIELDS OF VIEW

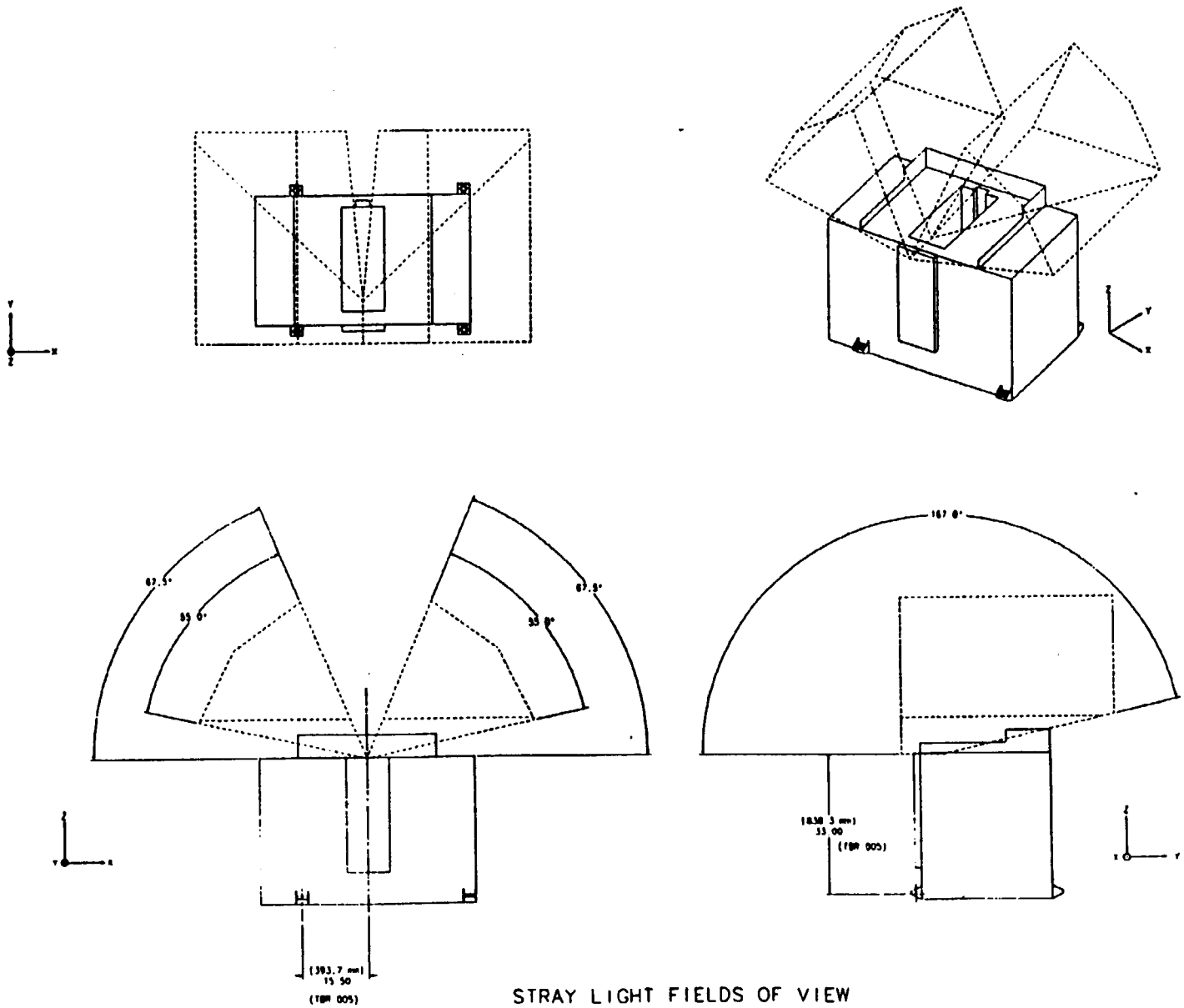

STRAY LIGHT FIELDS OF VIEW

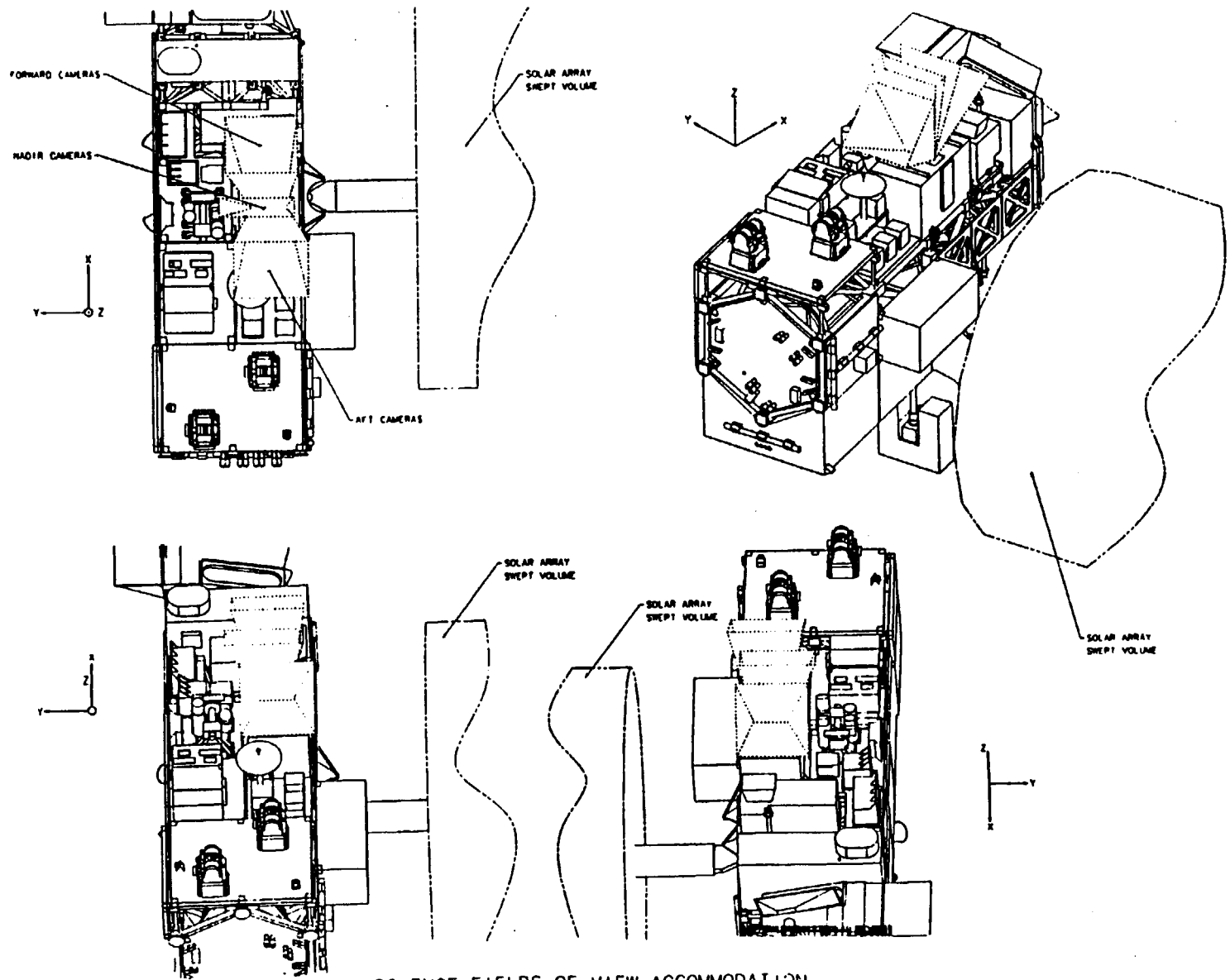

SCIENCE FIELDS OF VIEW ACCOMMODATION

Interconnect List Complete; Wire List Release Scheduled 4/29

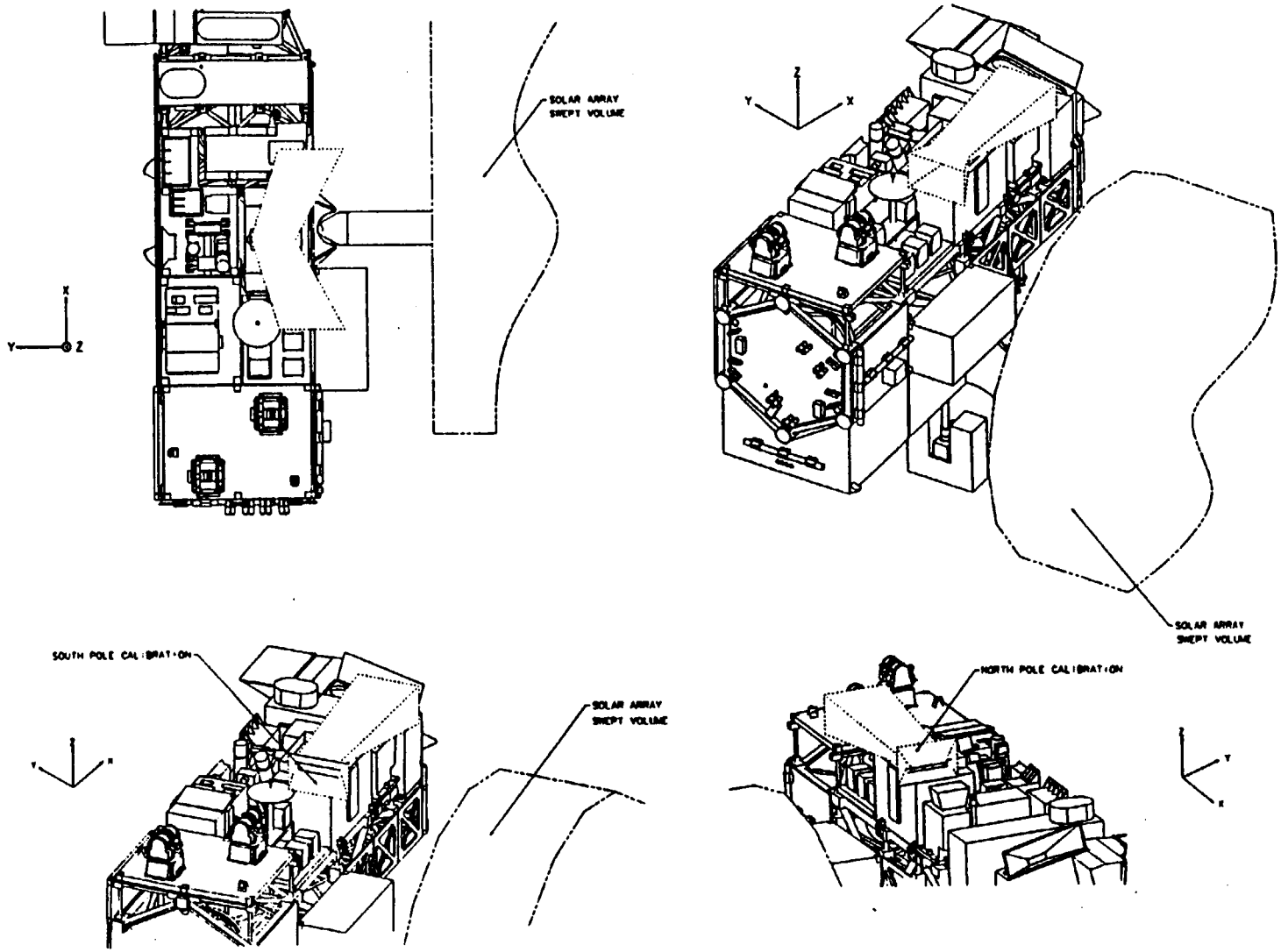

CALIBRATION FIELDS OF VIEW ACCOMODATIONS

20008831
30 August 1993

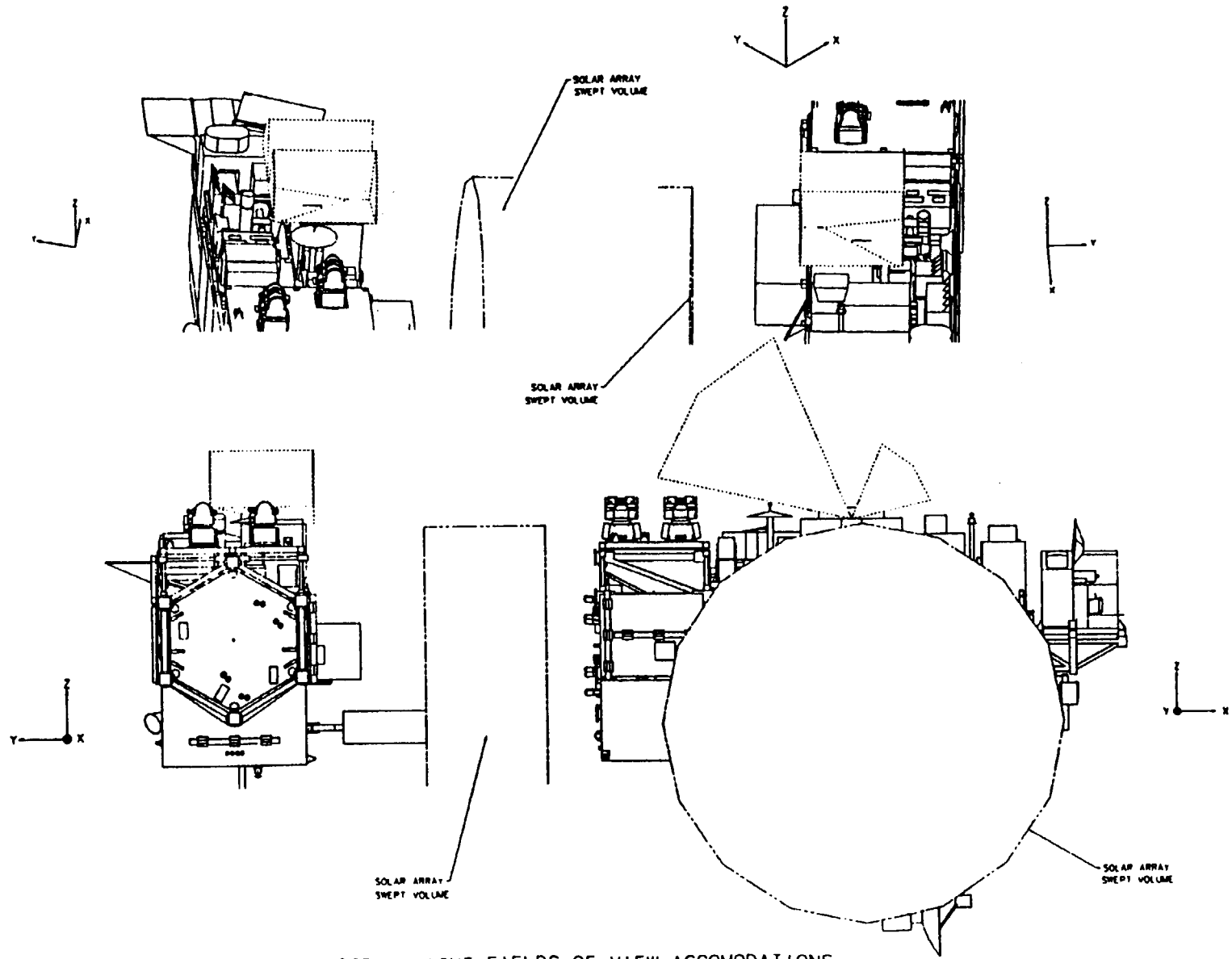

STRAY LIGHT FIELDS OF VIEW ACCOMODATIONS

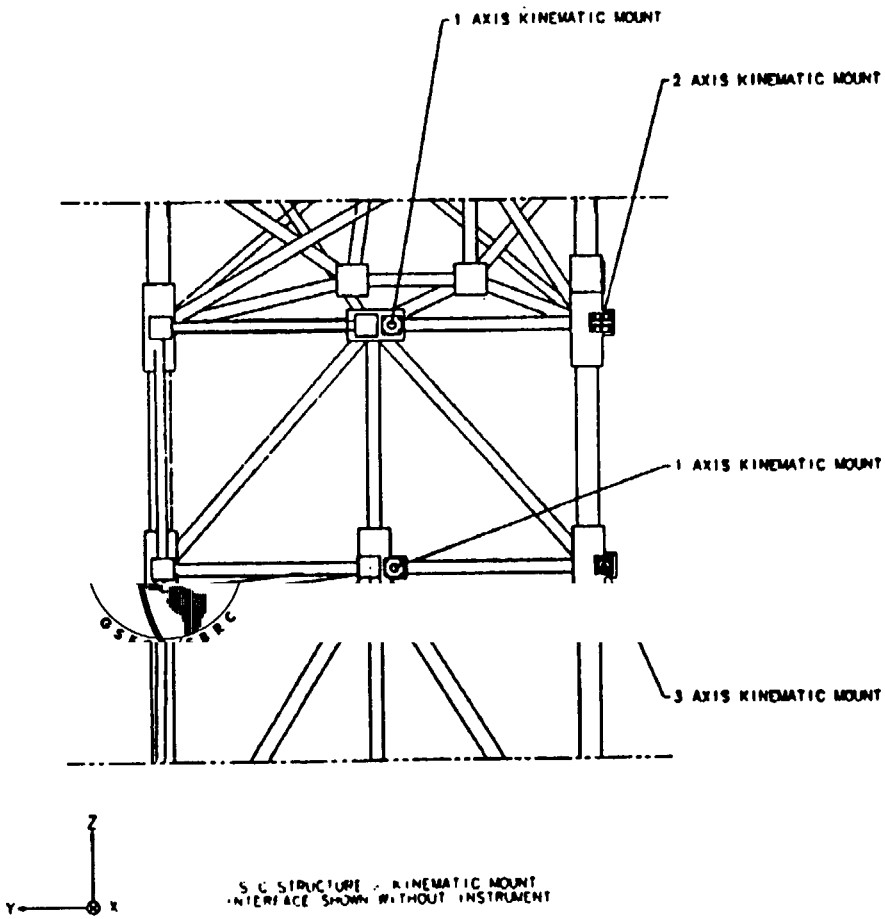

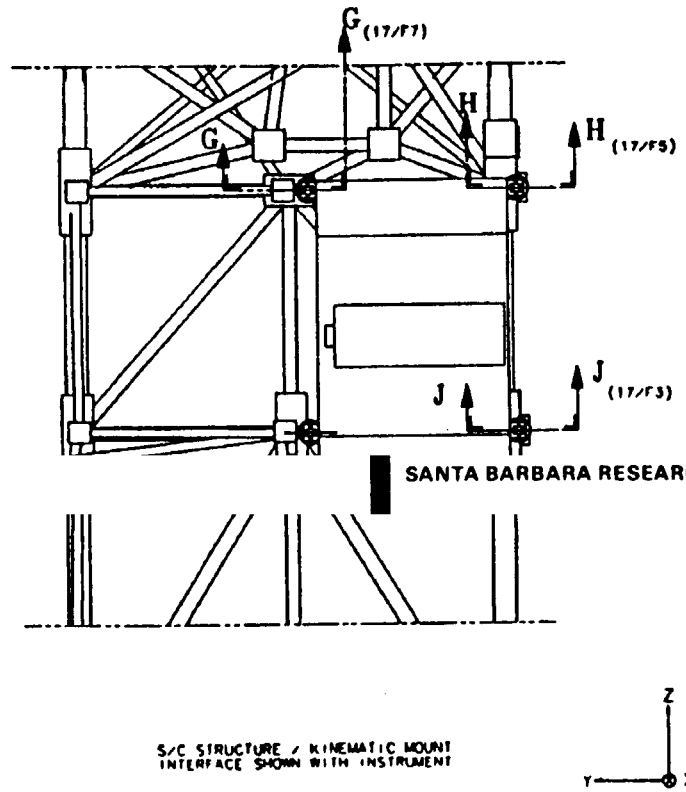

SANTA BARBARA RESEARCH CENTER
a subsidiary

MOUNTING DEFINITION

20008831
30 August 1993

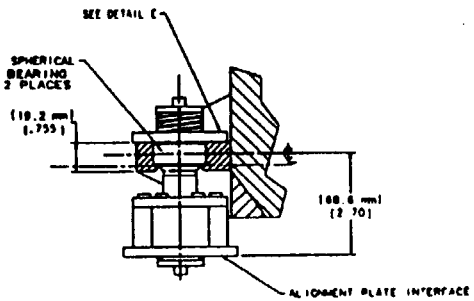

SECTION G-G
1 AXIS RESTRAINT 3 PLACES

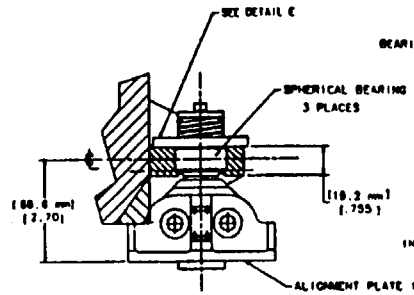

SECTION H-H
2 AXIS RESTRAINT 1 PLACE

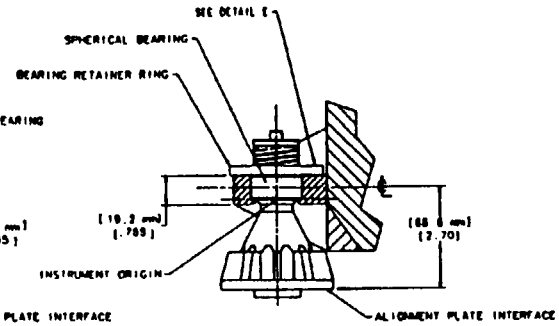

SECTION J-J
3 AXIS RESTRAINT 1 PLACE

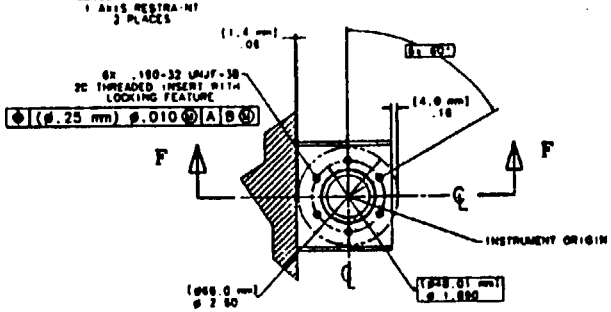

DETAIL E
BEARING RETAINER RING BOLT HOLE PATTERN
1, 2, AND 3 AXIS RESTRAINTS
(BEARING RETAINER RING NOT SHOWN FOR CLARITY)

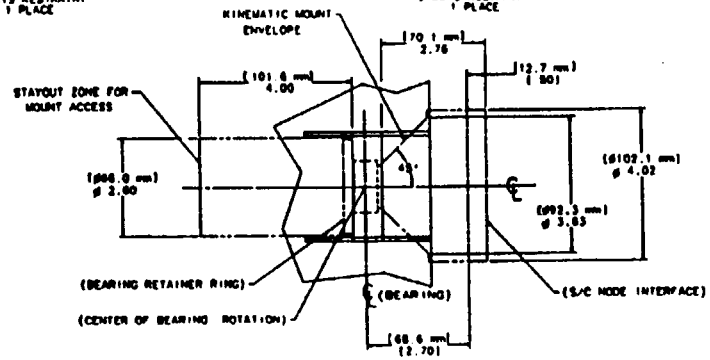

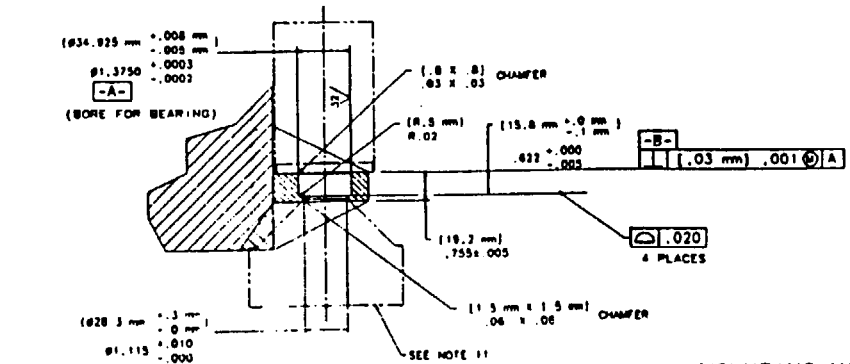

SECTION F-F

MISR MOUNTING HARDWARE (TBD 006)			
PART NO.	DESCRIPTION	QTY	RESPONSIBLE
TBD	1-AXIS KINEMATIC MOUNT	2	MARTIN MARIETTA
TBD	2-AXIS KINEMATIC MOUNT	1	MARTIN MARIETTA
TBD	3-AXIS KINEMATIC MOUNT	1	MARTIN MARIETTA
TBD	SPHERICAL BEARING	4	MARTIN MARIETTA
TBD	BEARING RETAINER RING	4	MARTIN MARIETTA
TBD	BEARING RETAINER SCREW	24	MARTIN MARIETTA
TBD	BEARING RETAINER WASHER	24	MARTIN MARIETTA

MOUNTING HARDWARE DEFINITION

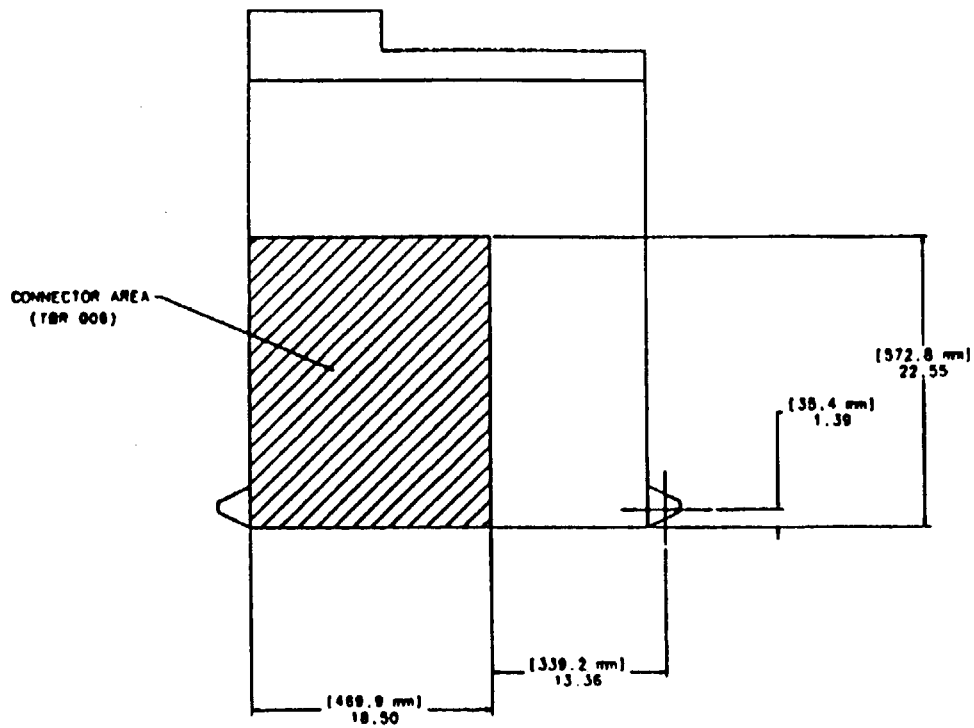

ELECTRICAL HARDWARE DEFINITION

20008831
30 August 1993

(TBD 007)

THIS SHEET 16 WILL DESCRIBE THE MISR THERMAL BLANKETS AND THE CLOSEOUT BLANKETS BETWEEN THE MISR AND SPACECRAFT THERMAL BLANKETS. EXTERIOR HEATER LOCATIONS WILL BE IDENTIFIED.

THERMAL HARDWARE DEFINITION

(TBD 008)

SHEET 17 WILL DESCRIBE ATTACHMENT
OF THE INSTRUMENT GROUND SUPPORT EQUIPMENT.

GROUND SUPPORT EQUIPMENT ATTACHMENT

20008831
30 August 1993

TBD LOG

ITEM	SHEET	ZONE	SUBJECT	RESPONSIBLE	DUE
TBD 001	1	F1	ALIGNMENT CUBE LOCATION (NOTE 5)	JPL	MISR PDR +4 WEEKS
TBD 002	1	E1	FDB, HCE, ELECTRONICS LOCATION (NOTE 8)	MARTIN MARIETTA	S/C PDR -13 WEEKS
TBD 003	1	D1	DATAM PLANE DEFINITION (NOTE 10)	JPL	MISR PDR +4 WEEKS
TBD 004	7	B6,7	LOUVER ENVELOPE	JPL	MISR PDR +4 WEEKS
TBD 005	9	C2,5	STRUCTURE RELIEF FOR KINEMATIC MOUNT	JPL	MISR PDR +4 WEEKS
TBD 006	17	C1	MOUNTING HARDWARE PART NUMBERS	MARTIN MARIETTA	S/C PDR -13 WEEKS
TBD 007	19	E5	THERMAL HARDWARE DEFINITION	MARTIN MARIETTA	S/C PDR +26 WEEKS
TBD 008	20	E5	GROUND SUPPORT EQUIPMENT ATTACHMENT DEFINITION	JPL	MISR PDR +4 WEEKS

TBR LOG

ITEM	SHEET	ZONE	SUBJECT	RESPONSIBLE	DUE
TBR 001	3	E5,6, D4	APERTURE COVER SIZE	JPL	MISR PDR +4 WEEKS
TBR 002	7	C4,D4	APERTURE COVER HINGE LOCATION	JPL	MISR PDR +4 WEEKS
TBR 003	7	D4	APERTURE COVER SWEPT VOLUME	JPL	MISR PDR +4 WEEKS
TBR 004	9	B6,7 C4,C6	APERTURE COVER VOLUME	JPL	MISR PDR +4 WEEKS
TBR 005	12	A7,B4	STRAY LIGHT FIELD OF VIEW ORIGIN LOCATION	JPL	MISR PDR +4 WEEKS
TBR 006	18	E6	CONNECTOR AREA	JPL	MISR PDR +4 WEEKS

Next Assembly	Used on
20008830	EOS–AM

First Application
EOS–AM

Revisions		Rev	
Ltr	Description	Date	Approved
Initial Issue		4–12–93	CM/GS

Revision Record Continued on Sheet _____

Contract No. NAS5–32500		
Written	B. Wilson	
Date	01–08–93	
Approved	N. Koepp–Baker	
Date	3–29–93	
Approved Date		
Issued	G. Rauscher	
Date	4–12–93	

GE Astro Space

General Electric Compar
East Windsor, N.J.
Valley Forge, Pa

Interface Control Drawing, Mechanical, Tables, Earth Observing System AM Spacecraft to Multi–angle Imaging SpectroRadiometer

Size	Code Ident No.	
A	49671	20008832

Sheet 1 of 23

PURPOSE

The Mechanical Interface Control Drawing (MICD) Tables, 20008832, when executed, in conjunction with the MICD Drawing, 20008831, represent an agreement of the detailed implementation of the mechanical interface between the Earth Observing System (EOS) AM Spacecraft and the Multi–angle Imaging SpectroRadiometer (MISR). These two drawings, together with Thermal Interface Control Drawing (TICD), 20008833; the Electrical Interface Control Drawing (EICD) Schematic, 20008834; EICD Tables, 20008835; Integration and Test Interface Control Drawing (I&T ICD), 20008836; and Command and Data Handling Interface Control Drawing (C&DH ICD), 20008837; describe the details of the interfaces between the EOS–AM Spacecraft and MISR. The top–level instrument Interface Control Drawing (ICD), 20008830, provides the instrument ICD tree and revision status for all sub–tier instrument ICDs.

SCOPE

The MICD Tables in conjunction with the MICD Drawings contain information necessary to develop the spacecraft configuration, for structural and mechanical studies, and during I&T for verification of installation and alignment. The MICD Tables describe the instrument mass properties, mechanisms, Finite Element Model (FEM), flight and launch accountability kit items, and alignment data. The MICD Drawing contains the instrument component outline drawings; science and calibration fields of view; mounting, electrical, and thermal hardware definition; and instrument ground support equipment attachment.

Approval Signatures

IN ADDITION TO ECN AND CCB APPROVALS
ALL CHANGES ON THIS DRAWING SHALL HAVE THE APPROVAL AND THE FULL AGREEMENT OF THE PARTIES LISTED BELOW.

REV	Spacecraft Program Office	Date	Instrument Program Office	Date	Principal Investigator	Date
	(Signature on file) J. Balch	2/11/93	(Signature on file) T. Reilly	3/19/93	(Signature on file) D. Diner	3/19/93

Size	Code Ident No.	
A	49671	20008832
		Sheet 2

Table of Contents

Section	Title	Sheet
	Purpose	2
	Scope	2
	Approval Signatures	2
	MICD TABLES	8

List of Figures

Figure No.	Title	Sheet
1	Coordinate Systems	9
2a	Mechanism Profiles – Cover	16
2b	Mechanism Profiles – North and South Pole Calibration Plates	17
2c	Mechanism Profiles – Goniometer Diode	18

List of Tables

Table No.	Title	Sheet
I	Reference Coordinate Systems	9
IIa	Mass Properties – Launch/Stowed Configuration	10
IIb	Mass Properties – On–Orbit Configuration	11
IIIa	Mechanism Characteristics – Cover Mechanism	12
IIIb	Mechanism Characteristics – South Pole Calibration Plate	13
IIIc	Mechanism Characteristics – North Pole Calibration Plate	14
IIId	Mechanism Characteristics – Goniometer Diode	15
IV	Finite Element Model	19
V	MISR Flight Items	20
VI	Launch Accountability Kit	21
VII	Alignment Data	22
VIII	Reference Documents	23

TBD LOG

ITEM	SECTION	PAGE	SUBJECT	RESPONSIBLE	DUE
TBD 001	Figure 1	9	Launch vehicle coordinate system	B. Wilson (GE)	Launch vehicle announcement + 26 wks
TBD 002	Table I	9	Launch vehicle coordinates of MISR	B. Wilson (GE)	Launch vehicle announcement + 26 wks
TBD 003	Table IIa Table IIb	10 11	Inertia matrix resolution	J. Stevens (JPL)	MISR PDR + 4 wks
TBD 004	Table IIIb	13	Location of South Pole Calibration Plate	B. Wilson (GE)	Completion of MICD Drawings initial issue + 3 wks
TBD 005	Table IIIc	14	Location of North Pole Calibration Plate	B. Wilson (GE)	Completion of MICD Drawings initial issue + 3 wks
TBD 006	Table IIId	15	Location of Goniometer Diode Mechanism	B. Wilson (GE)	Completion of MICD Drawings initial issue + 3 wks
TBD 007	Table V	20	MISR Flight Items* Part No.	J. Stevens (JPL)	MISR CDR + 4 wks
TBD 008	Table VII	22	Alignment data*	J. Stevens (JPL)	MISR Drill Template Delivery

* Where the majority of the table information is TBD, the entire table has been identified as TBD in the table title. Table information will be filled in as it becomes available.

TBR LOG

ITEM	SECTION	PAGE	SUBJECT	RESPONSIBLE	DUE
TBR 001	Figure 2a	16	Mechanism Profiles – Cover	J. Stevens (JPL)	
TBR 002	Figure 2b	17	Mechanism Profiles – North and South Pole Calibration Plates	J. Stevens (JPL)	
TBR 003	Figure 2c	18	Mechanism Profiles – Goniometer Diode	J. Stevens (JPL)	

MICD TABLES

1. The relationship among the instrument, spacecraft, and launch vehicle coordinate systems is shown pictorially in Figure 1.

2. The conversion among coordinate systems at the instrument origin is shown in Table I.

3. Launch and on–orbit configuration mass properties are shown in Tables IIa and IIb.

4. The MISR mechanisms are listed below. Mechanism characteristics are provided in Table III. Corresponding torque, linear force versus time, and angular momentum profiles are provided in the Figure 2 identified by the same lower case alpha character.
   a. Cover
   b. Forward and Aftward Calibration Plates
   c. Goniometer Diode

5. The finite element model which will be used by both the Instrument and Spacecraft Providers is identified in Table IV.

6. The instrument and associated spacecraft flight items are listed in Table V.

7. The contents of the launch accountability kit are identified in Table VI for both flight and non–flight items.

   The launch accountability kit contains each item not installed prior to shipment to the launch site and which must be installed before flight. Space is allocated for each item which must be removed before flight. Thus the launch accountability kit provides the means to verify that all items which must be installed before flight have been installed and all items which must be removed before flight have been removed.

8. The alignment offset among the instrument boresight, all alignment cubes, and the instrument and drill template mounting plane and hole pattern is shown in Table VII.

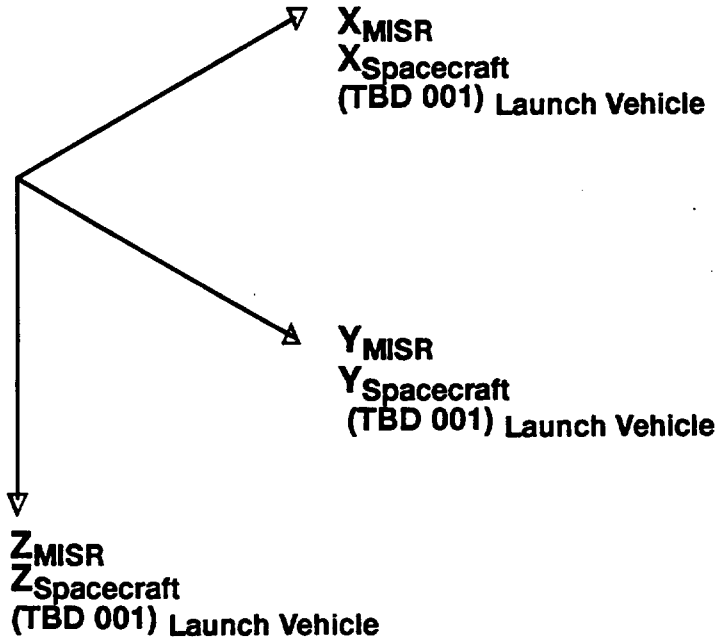

Figure 1. Coordinate Systems

Table I. Reference Coordinate Systems

Coordinate System	Coordinates (mm)		
Instrument (See Note 1.)	X_I= 0.0	Y_I= 0.0	Z_I= 0.0
Spacecraft	$X_{S/C}$= 2730.5	$Y_{S/C}$= –920.0	$Z_{S/C}$= 613.2
Launch Vehicle	$X_{Launch\ Vehicle}$=(TBD 002)	$Y_{Launch\ Vehicle}$=(TBD 002)	$Z_{Launch\ Vehicle}$=(TBD 002)

Notes:

1. See 20008831, Sheet 1 for location of instrument origin.

Table IIa. Mass Properties – Launch/Stowed Configuration (See Note 2.)

Mass (kg) (See Note 3.)	(%) (E)stimated (C)alculated (M)easured	Estimated Center of Mass (mm) (See Notes 3. & 4.)
106.0	100 E 0 C 0 M	X = 389 Y = 398 Z = 454

Estimated Inertia Matrix (kg–m^2) ± (TBD 003)% (See Notes 3. & 5.)		
I_{XX} = 19.40	I_{XY} = –0.10	I_{XZ} = 0.28
I_{YX} = –0.10	I_{YY} = 28.91	I_{YZ} = –0.27
I_{ZX} = 0.28	I_{ZY} = –0.27	I_{ZZ} = 24.66

Notes:

2. Mass Properties for launch or on–orbit stowed configuration.
3. Mass, center of mass, moments of inertia, and products of inertia are the same at the end of life as the beginning of life in the launch/stowed configuration.
4. Center of mass is specified with respect to the instrument origin (See 20008831, Sheet 1).
5. Instrument moments and products of inertia are specified about axes parallel to the instrument axes and passing through the instrument center of mass.

Table IIb. Mass Properties – On–Orbit Configuration (See Note 6.)

Mass (kg) (See Note 7.)	(%) (E)stimated (C)alculated (M)easured	Estimated Center of Mass (mm) (See Notes 4. & 7.)
106.0	100 E 0 C 0 M	X = 389 Y = 398 Z = 454

Estimated Inertia Matrix (kg–m^2) ± (TBD 003)% (See Notes 5. & 7.)		
I_{XX} = 19.40	I_{XY} = –0.10	I_{XZ} = 0.28
I_{YX} = –0.10	I_{YY} = 28.91	I_{YZ} = –0.27
I_{ZX} = 0.28	I_{ZY} = –0.27	I_{ZZ} = 24.66

Notes:

6. Mass Properties for on–orbit all doors deployed configuration.
7. Mass, center of mass, moments of inertia, and products of inertia are the same at the end of life as the beginning of life for the on–orbit configuration.

Table IIIa. Mechanism Characteristics – Cover Mechanism

Location	See 20008831 Sheet 2
Operation	The cover mechanism operates to open the Aperture Door during initialization and operates to close and open the Aperture Door for transition to and from Safe and Survival modes and for Delta V maneuvers (i.e., the Aperture Door is latched for launch, in the open position for all Science, Calibration, and Standby modes, and in the closed position for all other modes).
Mass being moved (kg) (M)easured, (C)alculated, (E)stimated	2.0 (E)
Axis of rotation (relative to instrument axis) **(with respect to instrument origin (mm))**	The cover rotates about an axis parallel to the X axis located at: X= 394 (C) Y= 38 (C) Z= 838 (C)
Center of mass about point of rotation (mm) (with respect to instrument origin) (See Note 8) (M)easured, (C)alculated, (E)stimated	X= 394 (C) Y= 361 (C) Z= 838 (C)
Inertia (kg–m^2) (with respect to axis of rotation)	0.5
Maximum Impulse (N–m–sec)	0.27
Finite Element Model Node Number	333296
Mechanism Profiles	See Figure 2a

Notes:

8. Center of mass of the cover is identified in the stowed position.

Table IIIb. Mechanism Characteristics – South Pole Calibration Plate

Location	See 20008831 Sheet **(TBD 004)**
Operation	The South Pole (–x side) calibration plate swings forward to calibrate the forward looking and nadir cameras. The plate is deployed 3.4 minutes after crossing the Day/Night Terminator and is stowed 10.5 minutes after terminator crossing. Calibration Data acquired between these intervals. The calibration plan calls for a calibration startup period where observations are taken on three orbits the first day (consecutive orbits may be requested), followed by three additional orbits the first week, followed by weekly observations the first month. Thereafter only one observation per month will be required. This start up pattern may be requested at any time in which the degradation is measured to be greater than 1% as compared to the previous observation.
Mass being moved (kg) (M)easured, (C)alculated, (E)stimated	2.2 (C)
Axis of rotation (relative to instrument axis) **(with respect to instrument origin (mm))**	The axis of rotation is about an axis parallel to the Y axis located at: X= 470 (C) Y= 351 (C) Z= 688 (C)
Center of mass about point of rotation (mm) (with respect to instrument origin) (See Note 9) (M)easured, (C)alculated, (E)stimated	X= 523 (C) Y= 351 (C) Z= 787 (C)
Inertia (kg–m^2) (with respect to axis of rotation)	0.039
Maximum Impulse (N–m–sec)	.013
Finite Element Model Node Number	333295
Mechanism Profiles	See Figure 2b

Notes:

9. Center of mass of the forward calibration plate is defined in the stowed position.

Table IIIc. Mechanism Characteristics – North Pole Calibration Plate

Location	See 20008831 Sheet **(TBD 005)**
Operation	The North Pole (+x side) calibration plate swings aft to calibrate the aft–looking and nadir cameras. The plate is deployed 10.5 minutes before the Night/Day Terminator and is stowed 3.4 minutes before the terminator crossing. Data is acquired on the same orbits as the South pole calibrations and hence the North Pole plate has the same frequency of observation.
Mass being moved (kg) (M)easured, (C)alculated, (E)stimated	2.2 (C)
Axis of rotation (relative to instrument axis) **(with respect to instrument origin (mm))**	The axis of rotation is about an axis parallel to the Y axis located at: X= 318 (C) Y= 351 (C) Z= 688 (C)
Center of mass about point of rotation (mm) (with respect to instrument origin) (See Note 10) (M)easured, (C)alculated, (E)stimated	X= 264 (C) Y= 351 (C) Z= 787 (C)
Inertia (kg–m^2) (with respect to axis of rotation)	0.039
Maximum Impulse (N–m–sec)	.013
Finite Element Model Node Number	333294
Mechanism Profiles	See Figure 2b

Notes:

10. Center of mass of the forward calibration plate is defined in the stowed position.

Table IIId. Mechanism Characteristics – Goniometer Diode

Location	See 20008831 Sheet **(TBD 006)**
Operation	The goniometer diode is taking calibration data between 7.7 and 5.7 minutes before the Night/Day Terminator crossing at the North Pole and between 5.7 and 7.7 minutes after the Day/Night Terminator crossing at the South Pole. The mechanism starts in the 0 degree position (looking Nadir) and swings continuously to either +60 degrees or –60 degrees and then back completing one cycle (the direction will depend on which calibration plate is deployed). The mechanism repeats 1 cycle every 4 seconds for 120 seconds; Goniometer diode used during both North Pole and South Pole calibrations, hence is used every time a calibration plate is deployed.
Mass being moved (kg) (M)easured, (C)alculated, (E)stimated	1.0 (C)
Axis of rotation (relative to instrument axis) **(with respect to instrument origin (mm))**	The axis of rotation is about an axis parallel to the Y axis located at: X= 394 (C) Y= 681 (C) Z= 790 (C)
Center of mass about point of rotation (mm) (with respect to instrument origin) (See Note 11) (M)easured, (C)alculated, (E)stimated	X= 394 (C) Y= 681 (C) Z= 671 (C)
Inertia (kg–m^2) (with respect to axis of rotation)	0.031
Bipolar step time (sec)	0.02
Step frequency (sec)	2.52
Maximum impulse (N–m–sec)	1.8
Finite Element Model Number	333361
Mechanism Profiles	See Figure 2c

Notes:

11. Center of mass of the goniometer diode mechanism is defined in the stowed position.

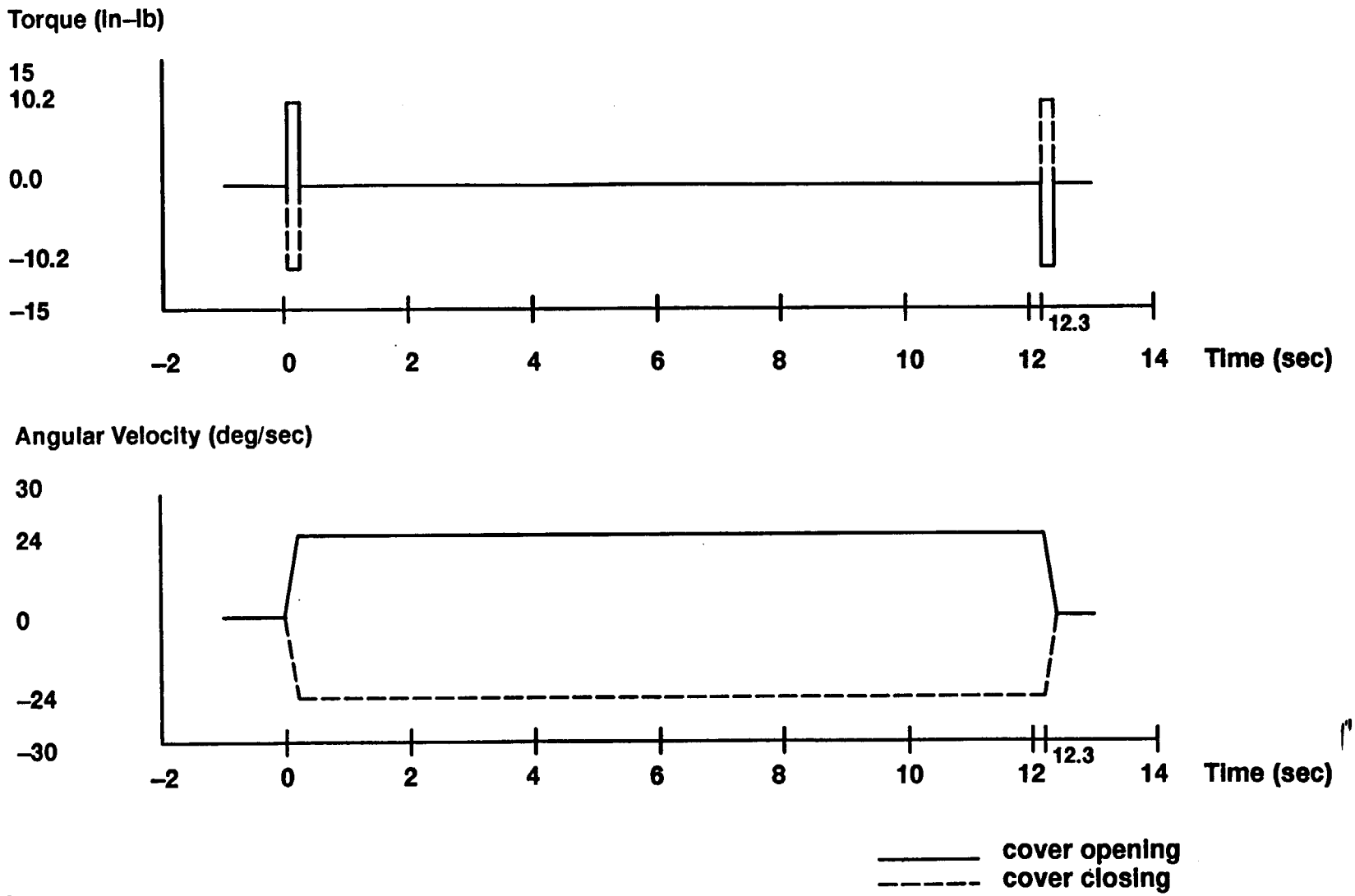

Notes:

12. Cover is opened at instrument activation and is used thereafter for contamination protection only.

Figure 2a. Mechanism Profiles – Cover (TBR 001)

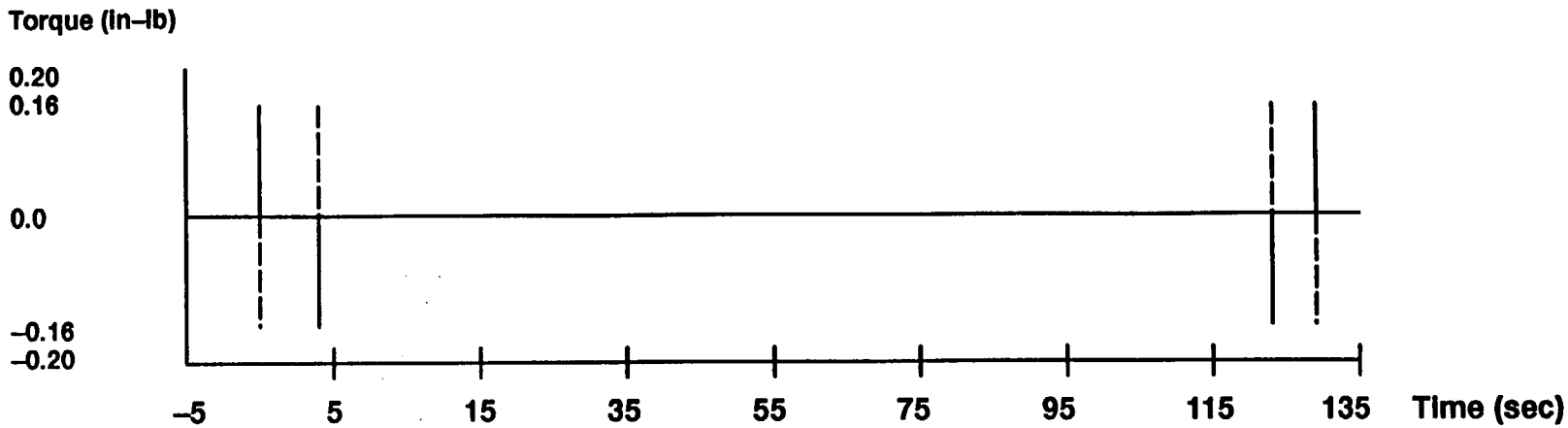

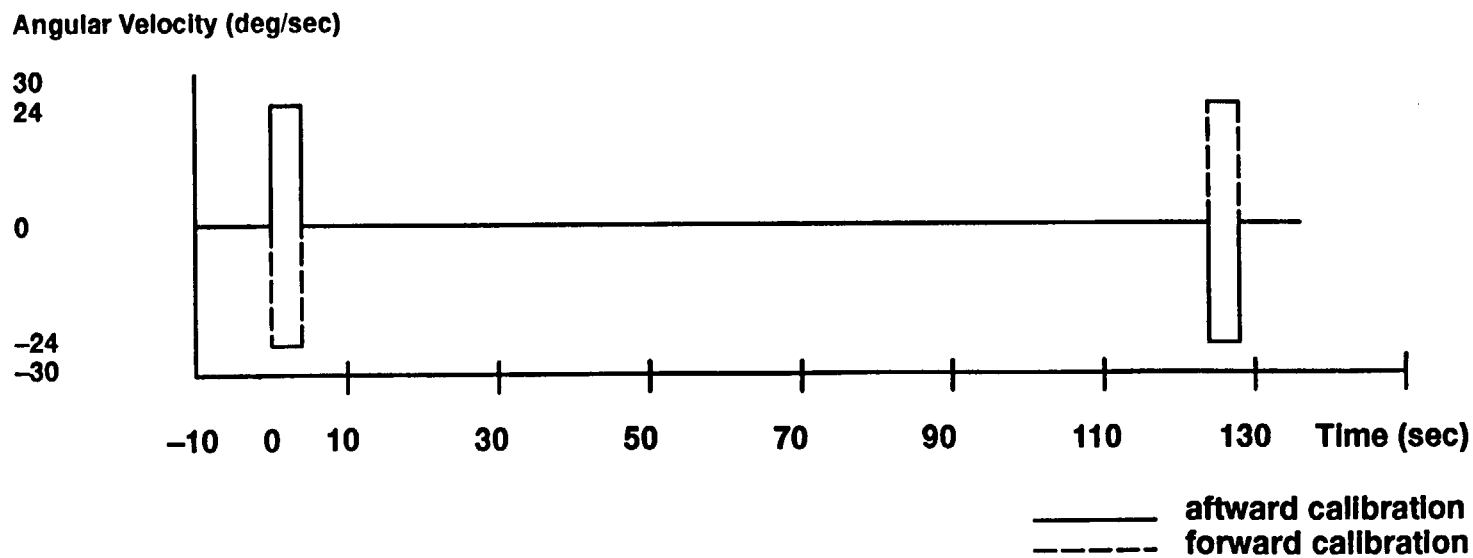

Notes:

13. Calibration three times on first day, plus three additional times the first week, then weekly the first month and finally once per month thereafter.

Figure 2b. Mechanism Profiles – North and South Pole Calibration Plates (TBR 002)

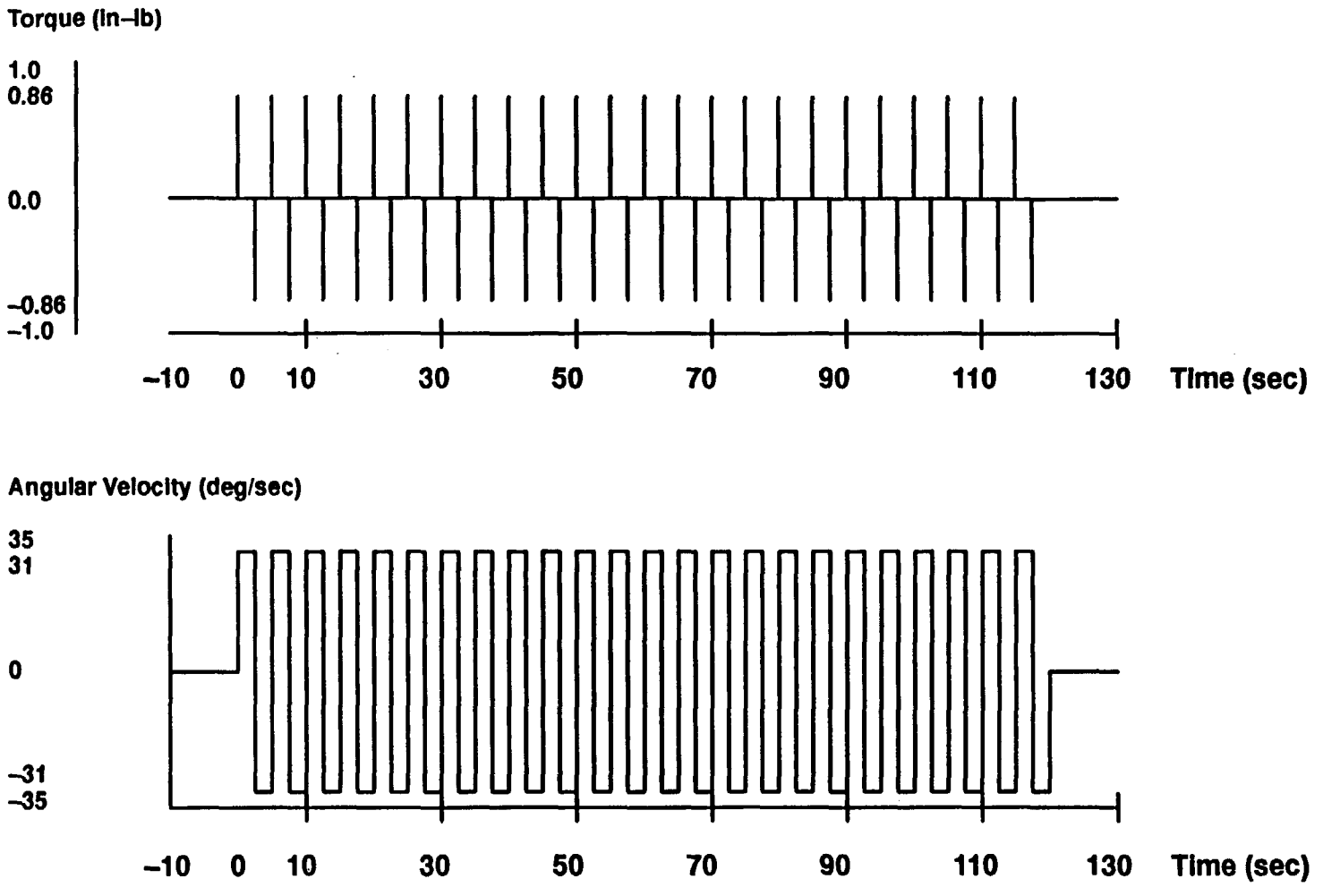

Notes:

14. Goniometer diode used during calibration: six times during the first day, followed by six deployment intervals during the first week, followed by two deployment intervals per week for the remainder of the first month. Routine observations thereafter will be made at a frequency of two deployments per month.

Figure 2c. Mechanism Profiles – Goniometer Diode (TBR 003)

Table IV. Finite Element Model

	Revision			
	Preliminary	Update	Update	
Date	10–31–91	5–14–92	12–23–93	
File name	MISRC1FBDA.DAT	MISR0504FBD.DAT	MISR2FBDM.DAT	
Grid/Element/ Property ID Range	330,001 to 331,999	332,001 to 333,999	333,001 to 334,999	
Coordinate ID Range	476 to 499	476 to 499	476 to 499	
First Mode Frequency (Hz)	45.8	51.8	62.75	

Table V. MISR Flight Items

Item	Part No.	Supplier	Qty
MISR	(TBD 007)	JPL	1

Table VI. Launch Accountability Kit

Item	Drawing #	Flight	Non–Flight
None			

Table VII. Alignment Data (TBD 008) *

From	To	Alignment Offset (arc–second) (see Note 15.)		
		θ_X	θ_Y	θ_Z
Instrument Boresight	Instrument Alignment Cube			
Instrument Alignment Cube	Spacecraft Alignment Cube			
Spacecraft Alignment Cube	Spacecraft Master Reference Cube			
Instrument Alignment Cube	Instrument Mounting Plane & Hole Pattern			
Drill Template Alignment Cube	Drill Template Mounting Plane & Hole Pattern			

* Where the majority of the table information is TBD, the entire table has been identified as TBD in the table title. Table information will be filled in as it becomes available.

Notes:

15. Entries are offsets between the nominal instrument and spacecraft axes as defined in Figure 1.

Table VIII. Reference Documents*

Document Number	REV	Date	Document Title	Source

* Table information will be filled in as required.

(This page intentionally left blank.)

Next Assembly	Used on	Revisions		Rev 001	
20008830	EOS AM	Ltr	Description	Date	Approve
First Application EOS AM		Initial Issue		12-18-92	CM/GS

Revision Record Continued on Sheet _____

	Contract No. NAS5-32500	GE Astro Space — General Electric Company, East Windsor, N.J., Valley Forge, Pa
signature on file	Written B. Wilson Date 7-24-92	**Interface Control Drawing, Thermal, Earth Observing System AM Spacecraft to Multi-angle Imaging SpectroRadiometer**
	Approved N. Koepp-Baker Date 12-18-92	
	Approved Date	Size A — Code Ident No. 49671 — 20008833
	Issue G. Rauscher Date 12-18-92	Sheet 1 of 37

PURPOSE

The Thermal Interface Control Drawing (TICD), 20008833, when executed, represents an agreement of the detailed implementation of the thermal interface between the Earth Observing System (EOS) AM Spacecraft and the Multi–angle Imaging SpectroRadiometer (MISR). This drawing, together with the Mechanical Interface Control Drawing (MICD) Drawing, 20008831, MICD Tables, 20008832, Electrical Interface Control Drawing (EICD) Schematic, 20008834, EICD Tables, 20008835, Integration and Test Interface Control Drawing (I&T ICD), 20008836, and Command and Data Handling Interface Control Drawing (C&DH ICD), 20008837, describe the details of the interfaces between the EOS AM Spacecraft and MISR. The top–level instrument Interface Control Drawing (ICD), 20008830, provides the instrument ICD tree and revision status for all sub–tier instrument ICDs.

SCOPE

The TICD contains information on surface properties, heat flow, thermal balance, power dissipation, thermal control, and temperature limits for use in instrument and spacecraft thermal design and validation of the spacecraft accommodation of the instrument thermal environment.

Approval Signatures

ALL CHANGES ON THIS DRAWING SHALL HAVE THE APPROVAL AND THE FULL AGREEMENT OF THE PARTIES LISTED BELOW.

REV	Spacecraft Program Office	Date	Instrument Program Office	Date	Principal Investigator	Date
	signature on file J. Balch	7–24–92	signature on file T. Reilly	10/14/92	signature on file D. Diner	10/14/92

Size	Code Ident No.	
A	49671	20008833
		Sheet 2

Table of Contents

Title	Sheet
Purpose	2
Scope	2
Approval Signatures	2
PART 1 THERMAL INTERFACE	8
Thermal Interface Description	8
PART 2 HEAT FLOW	18
Heat Flow Description	18
PART 3 THERMAL CONTROL	33
Thermal Control Features	33

List of Figures

Figure No.	Title	Sheet
1	Thermal Interface Design Features	9
2	Thermal Fields of View	10
3	Wide–Angle Perspective – Thermal Fields of View	11
4	Surface Designations	12
5a	Power Dissipation Profile – Safe Mode	26
5b	Power Dissipation Profile – Survival Mode	27
5c	Power Dissipation Profile – Local, Global, & Stereoscopic Modes	28
5d	Power Dissipation Profile – Calibration Mode	29
5e	Power Dissipation Profile – Standby Mode	30
5f	Power Dissipation Profile – Operational Orbit Profile	31
6	Heater and Sensor Locations	35

List of Tables

Table No.	Title	Sheet
Ia	Radiator Surface Properties	13
Ib	Reflector Surface Properties	14
Ic	Aperture Surface Properties	15
Id	Multi–Layer Insulation Surface Properties	16
Ie	Mounting Surface Properties	17
IIa	Worst Case Orbit Heat Flow Limits	19
IIb	Nominal Orbit Heat Flow – Safe Mode	20
IIc	Nominal Orbit Heat Flow – Survival Mode	21
IId	Nominal Orbit Heat Flow – Local, Global, & Stereoscopic Modes	22
IIe	Nominal Orbit Heat Flow – Calibration Mode	23
IIf	Nominal Orbit Heat Flow – Standby Mode	24
III	Net Thermal Balance	25
IV	Thermal Math Model	32
V	Heaters and Coolers	34
VI	Temperature Limits	35
VII	Reference Documents	36

TBD LOG

ITEM	SECTION	PAGE	SUBJECT	RESPONSIBLE	DUE
TBD 001	Figure 1.	9	Thermal properties of surfaces inside baffle	E. Lin (JPL)	01–11–93
TBD 002	Figure 1.	9	Thermal properties of aperture door	E. Lin (JPL)	01–11–93
TBD 003	Figure 2	10	MISR thermal fields of view	E. Lin (JPL)	01–11–93
TBD 004	Figure 3	11	Wide–angle perspective thermal fields of view	B. Wilson (GE)	03–11–93
TBD 005	Table Ia	13	Radiator surface properties*	E. Lin (JPL)	01–11–93
TBD 006	Table Ib	14	Reflector surface properties*	E. Lin (JPL)	01–11–93
TBD 007	Table Ic	15	Aperture surface properties*	E. Lin (JPL)	01–11–93
TBD 008	Table Id	16	Multi–layer insulation surface properties*	E. Lin (JPL)	01–11–93
TBD 009	Table Ie	17	Mounting surface properties*(4 places)	J. Stevens (JPL)	01–11–93
TBD 010	Table IIa	19	Worst case orbit heat flow limits (2 Places)	E. Grob (GE) (Q_{back}) E. Lin (JPL)	02–28–93 08–02–93
TBD 011	Table IIb	20	Nominal heat flow – Safe Mode * (2 Places)	E. Grob (GE) (Q_{back}) E. Lin (JPL)	02–28–93 08–02–93
TBD 012	Table IIc	21	Nominal heat flow – Survival Mode* (2 Places)	E. Grob (GE) (Q_{back}) E. Lin (JPL)	02–28–93 08–02–93
TBD 013	Table IId	22	Nominal heat flow – Local, Global, (2 Places) & Stereoscopic Mode*	E. Grob (GE) (Q_{back}) E. Lin (JPL)	02–28–93 08–03–93
TBD 014	Table IId	23	Nominal heat flow – Calibration Mode* (2 Places) & Stereoscopic Mode*	E. Grob (GE) (Q_{back}) E. Lin (JPL)	02–28–93 08–03–93
TBD 015	Table IId	24	Nominal heat flow – Standby Mode* (2 Places) & Stereoscopic Mode*	E. Grob (GE) (Q_{back}) E. Lin (JPL)	02–28–93 08–03–93
TBD 016	Table III	25	Net thermal balance*	B. Wilson (GE)	10–01–93
TBD 017	Figure 5a	26	Power dissipation profile – Safe Mode	E. Lin (JPL)	08–03–93
TBD 018	Figure 5b	27	Power dissipation profile – Survival Mode	E. Lin (JPL)	08–03–93
TBD 019	Figure 5b	28	Electrical Heater Power – Local, Global, & Stereoscopic Mode	E. Lin (JPL)	08–03–93
TBD 020	Figure 5b Calibration Mode	29	Electrical Heater Power –	E. Lin (JPL)	08–03–93
TBD 021	Figure 5b	30	Electrical Heater Power – Standby Mode	E. Lin (JPL)	08–03–93
TBD 022	Table V	35	Heaters and coolers*	E. Lin (JPL)	08–03–93
TBD 023	Figure 6	36	Heater and sensor locations	E. Lin (JPL)	08–03–93
TBD 024	Table VI	37	Temperature limits*	E. Lin (JPL)	01–11–93

* Where the majority of the table information is TBD, the entire table has been identified as TBD in the table title. Table information will be filled in as it becomes available.

TBR LOG

ITEM	SECTION	PAGE	SUBJECT	RESPONSIBLE	DUE
TBR 001	Table Ie	17	Kinematic mount conductivity	E. Grob (GE)	01–31–94

PART 1 THERMAL INTERFACE

Thermal Interface Description

MISR is designed to be thermally independent from the EOS AM Spacecraft. All thermally non–functional outer surfaces are covered with Multi–Layer Insulation (MLI) to minimize radiative exchange with the surroundings, and low conductance kinematic mounts are provided at the mounting interface to the spacecraft.

The entrance aperture represents a sizeable thermal disturbance due to a strong radiative coupling to the earth. There will be a net orbit–averaged energy loss at the entrance aperture with some orbital variation due to the changing albedo flux. The Thermal Electric Coolers (TECs) are used to cool the detectors to their required operating temperature of –10°C.

After initial system checkout the instrument is calibrated nominally once per month for a duration of approximately 4 minutes at each pole.

The primary radiating surfaces are located on the –Y and +Z faces of the instrument. These radiators reject the majority of the orbit average power dissipated within the instrument. These radiators are painted white to minimize absorbed albedo and solar energy.

The thermal design features are shown in Figure 1; thermal fields of view are shown in Figure 2; resulting wide–angle perspectives are shown in Figure 3; surfaces are identified in Figure 4; and surfaces are described in Table I.

Figure 1. Thermal Interface Design Features

Size	Code Ident No.		
A	49671	20008833	
			Sheet 9

(TBD 003)

Figure 2. Thermal Fields of View

(TBD 004)

Figure 3. Wide–Angle Perspective – Thermal Fields of View

Size	Code Ident No.		
A	49671	20008833	
			Sheet 11

Notes:

1. See Table I for surface properties.

Figure 4. Surface Designations

Table Ia. Radiator Surface Properties (TBD 005)*

SD	Coating	Area (in^2)	Surface Emissivity		Surface Absorptivity		Temp (C)	Estimated View Factor to Space	Orientation
			BOL	EOL	BOL	EOL			
D1	White Paint	1218	0.85	0.91	0.18	0.35	0±25		–Y
D2		312							–Y
D3		312							–Y
E1	White Paint	634	0.85	0.91	0.18	0.35	0±25		+Z
E2		584							+Z
E3		312							+Z

Notes:

* Where the majority of the table information is blank, the entire table has been identified as TBD in the table title. Table information will be filled in as it becomes available.

BOL Beginning of life
C Centigrade
EOL End of life
in Inch
SD Surface designation
TBD To be determined
Temp Temperature

Table Ib. Reflector Surface Properties (TBD 006)*

SD	Coating	Area (in^2)	Surface Emissivity		Surface Absorptivity		Temp (C)	Estimated View Factor to Space	Orientation
			BOL	EOL	BOL	EOL			
A2	Black paint	92							+X
B2	Black paint	92							–X
C2	Black paint	176							+Y
D4	Black paint	176							–Y

Notes:

* Where the majority of the table information is blank, the entire table has been identified as TBD in the table title. Table information will be filled in as it becomes available.

BOL Beginning of life

C Centigrade

EOL End of life

in Inch

SD Surface designation

TBD To be determined

Temp Temperature

Table Ic. Aperture Surface Properties (TBD 007)*

SD	Area (in^2)	Effective Emissivity		Effective Absorptivity		Temp (C)	Estimated View Factor to Space	Orientation
		BOL	EOL	BOL	EOL			
O	312							–Z

Notes:

* Where the majority of the table information is blank, the entire table has been identified as TBD in the table title. Table information will be filled in as it becomes available.

BOL Beginning of life

C Centigrade

EOL End of life

in Inch

SD Surface designation

TBD To be determined

Temp Temperature

Table Id. Multi–Layer Insulation Surface Properties (TBD 008)*

SD	Type	Area (in^2)	Through Emissivity (Effective Emissivity)		Surface Emissivity		Surface Absorptivity	
			BOL	EOL	BOL	EOL	BOL	EOL
A1		930						
B1		930						
C1		1530						
F		1494						

Notes:

* Where the majority of the table information is blank, the entire table has been identified as TBD in the table title. Table information will be filled in as it becomes available.

BOL Beginning of life
C Centigrade
EOL End of life
in Inch
SD Surface designation
TBD To be determined
Temp Temperature

Table Ie. Mounting Surface Properties (TBD 009)*

SD	Area (in^2)	Temperature (C) (See Note 2)	Conductivity (W/C) (See Note 3)	Flatness (in/ft p–p)	Finish (µin)	Surface
G	36		0.05 ± 0.02 (TBR 001)			

Notes:

* Where the majority of the table information is blank, the entire table has been identified as TBD in the table title. Table information will be filled in as it becomes available.

C Centigrade
ft Foot
in Inch
µin Micro–inch
N/A Not applicable
p–p Peak–to–peak
SD Surface designation
TBD To be determined
W Watt

2. Temperature is reported at the instrument side of the mount.
3. Conductivity for kinematically mounted instruments is reported over the area of each mount.

PART 2 HEAT FLOW

Heat Flow Description

1. Table II describes heat flow for each mode defined in the C&DH ICD for a nominal orbit. Heat flow limits are also described which encompass worst case orbits. Heat flow will be verified by analysis only. The following legend is used:

N/A	Not applicable
Q_{abs}	The two–orbit average radiant heat from solar, albedo, and earth radiation that is absorbed by the surface.
Q_{back}	The two–orbit average radiant heat from all parts of the spacecraft within the view of the surface that is absorbed by the surface.
Q_{in}	$Q_{in} = Q_{abs} + Q_{back}$
Q_{out}	The two–orbit average heat flow which is transferred by thermal radiation plus thermal conduction at the surface. For mounting surfaces, this includes the effects of structural mounting, electrical cables, and ground straps, as appropriate.
Q_{total}	$Q_{total} = Q_{in} - Q_{out}$. $+Q_{total}$ is net heat flow into the surface, and $-Q_{total}$ is net heat flow out of the surface.
SD	Surface designation
TBD	To be determined
W	Watt

2. Thermal balance is shown in Table III.

3. Power dissipation profile is shown in Figure 5. Two types of instances in the orbit which may be significant to instrument operation or spacecraft thermal environment are indicated on the profiles. The following legend is used:

Terminators	Day/Night and Night/Day Terminators are indicated on the profile. The Day/Night Terminator is when the spacecraft ground track passes from the daylight side to the night side of the Earth. The Night/Day Terminator is when the spacecraft ground track passes from the night side to the daylight side of the Earth.
Eclipse	Eclipse Entry is when the spacecraft enters the Earth eclipse of the Sun. Eclipse Exit is when the spacecraft exits the Earth eclipse of the Sun.

4. The thermal math model is identified in Table IV.

Table IIa. Worst Case Orbit Heat Flow Limits (TBD 010)

SD	Q_{in} (W)				Q_{out} (W)	
	Q_{abs} (W)		Q_{back} (W)			
	Minimum	Maximum	Minimum	Maximum	Minimum	Maximum
Radiator Surfaces						
D1						
D2						
D3						
E1						
E2						
E3						
Total						
Reflector Surfaces						
A2						
B2						
C2						
D4						
Total						
Aperture Surfaces						
O						
Total						
Multi–Layer Insulation Surfaces						
A1						
B1						
C1						
F						
Total						
Mounting Surfaces						
G						
Total						

Table IIb. Nominal Orbit Heat Flow – Safe Mode (TBD 011)

SD	Q_{in} (W)				$-Q_{out}$ (W)		Q_{total} (W)
	Q_{abs} (W)		Q_{back} (W)				
	Minimum	Maximum	Minimum	Maximum	Minimum	Maximum	Maximum
Radiator Surfaces							
D1							
D2							
D3							
E1							
E2							
E3							
Total							
Reflector Surfaces							
A2							
B2							
C2							
D4							
Total							
Aperture Surfaces							
O							
Total							
Multi–Layer Insulation Surfaces							
A1							
B1							
C1							
F							
Total							
Mounting Surfaces							
G							
Total							

Table IIc. Nominal Orbit Heat Flow – Survival Mode (TBD 012)

SD	Q_{in} (W)				Q_{out} (W)		Q_{total} (W)
	Q_{abs} (W)		Q_{back} (W)				
	Minimum	Maximum	Minimum	Maximum	Minimum	Maximum	Maximum
Radiator Surfaces							
D1							
D2							
D3							
E1							
E2							
E3							
Total							
Reflector Surfaces							
A2							
B2							
C2							
D4							
Total							
Aperture Surfaces							
O							
Total							
Multi–Layer Insulation Surfaces							
A1							
B1							
C1							
F							
Total							
Mounting Surfaces							
G							
Total							

Table IId. Nominal Orbit Heat Flow – Local, Global, & Stereoscopic Mode (TBD 013)

SD	Q_{in} (W)				Q_{out} (W)		Q_{total} (W)
	Q_{abs} (W)		Q_{back} (W)				
	Minimum	Maximum	Minimum	Maximum	Minimum	Maximum	Maximum
Radiator Surfaces							
D1							
D2							
D3							
E1							
E2							
E3							
Total							
Reflector Surfaces							
A2							
B2							
C2							
D4							
Total							
Aperture Surfaces							
O							
Total							
Multi–Layer Insulation Surfaces							
A1							
B1							
C1							
F							
Total							
Mounting Surfaces							
G							
Total							

Table IIe. Nominal Orbit Heat Flow – Calibration Mode (TBD 014)

SD	Q_{in} (W)				Q_{out} (W)		Q_{total} (W)
	Q_{abs} (W)		Q_{back} (W)				
	Minimum	Maximum	Minimum	Maximum	Minimum	Maximum	Maximum
Radiator Surfaces							
D1							
D2							
D3							
E1							
E2							
E3							
Total							
Reflector Surfaces							
A2							
B2							
C2							
D4							
Total							
Aperture Surfaces							
O							
Total							
Multi–Layer Insulation Surfaces							
A1							
B1							
C1							
F							
Total							
Mounting Surfaces							
G							
Total							

Table IIf. Nominal Orbit Heat Flow – Standby Mode (TBD 015)

SD	Q_{in} (W)				Q_{out} (W)		Q_{total} (W)
	Q_{abs} (W)		Q_{back} (W)				
	Minimum	Maximum	Minimum	Maximum	Minimum	Maximum	Maximum
Radiator Surfaces							
D1							
D2							
D3							
E1							
E2							
E3							
Total							
Reflector Surfaces							
A2							
B2							
C2							
D4							
Total							
Aperture Surfaces							
O							
Total							
Multi–Layer Insulation Surfaces							
A1							
B1							
C1							
F							
Total							
Mounting Surfaces							
G							
Total							

Table III. Net Thermal Balance (TBD 016)

	Heat Flow (W)				
Mode	Safe	Survival	Operational	Calibration	Standby
Heat Source					
Electrical equipment power dissipation (See Figures 5a–5e)					
Electrical heater power (See Figures 5a–5e)					
Q_{abs} (see Tables IIb–IId)					
Q_{back} (see Tables IIb–IId)					
Total In					
Heat Sink (see Tables IIb – IId)					
Radiator surface radiation					
Reflector surface radiation					
Aperture surface radiation					
MLI surface radiation					
MISR to spacecraft conduction					
Total Out					
Total Imbalance					

Notes:

TBD To be determined
MLI Multi–layer insulation
W Watts

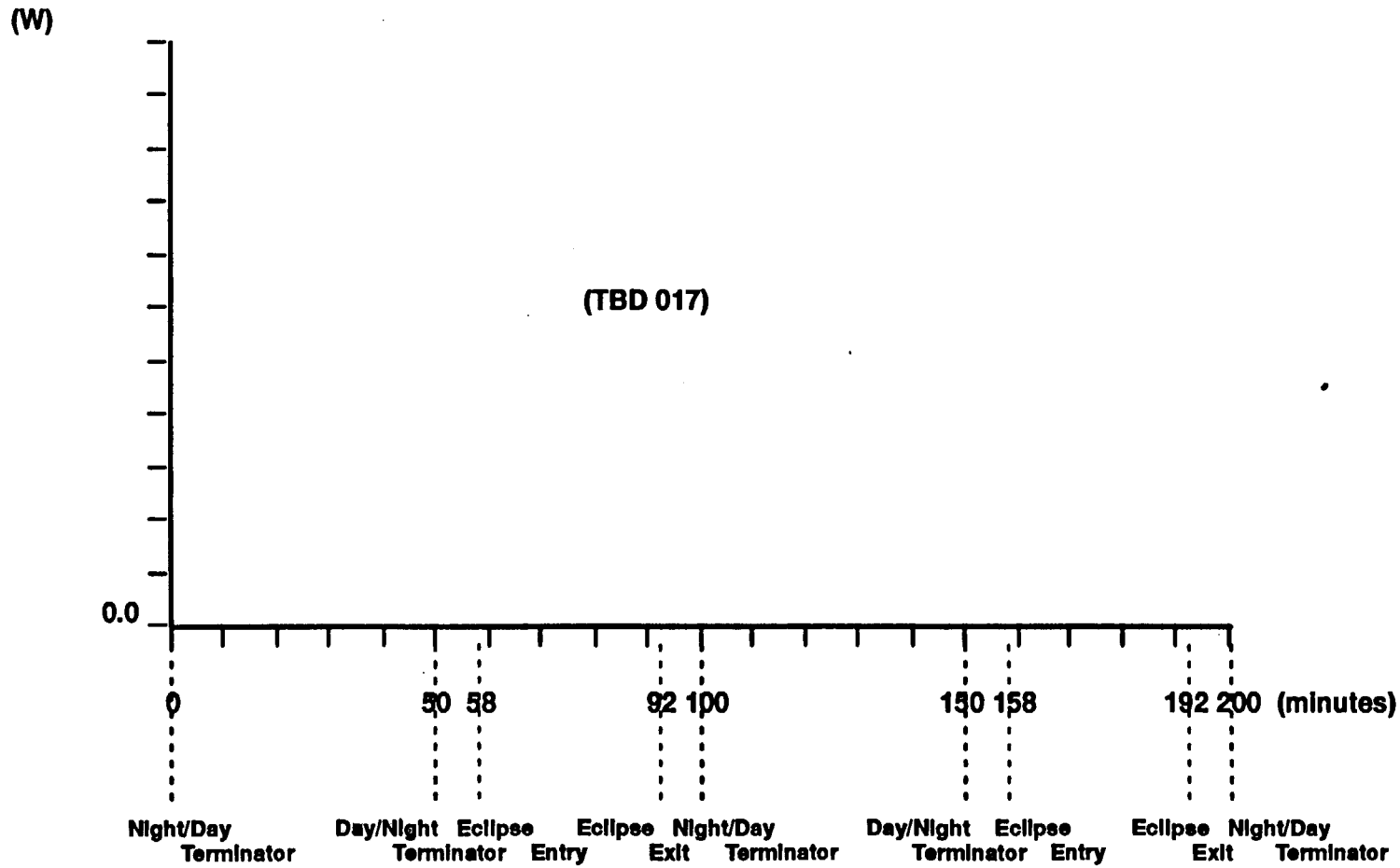

Figure 5a. Power Dissipation Profile – Safe Mode

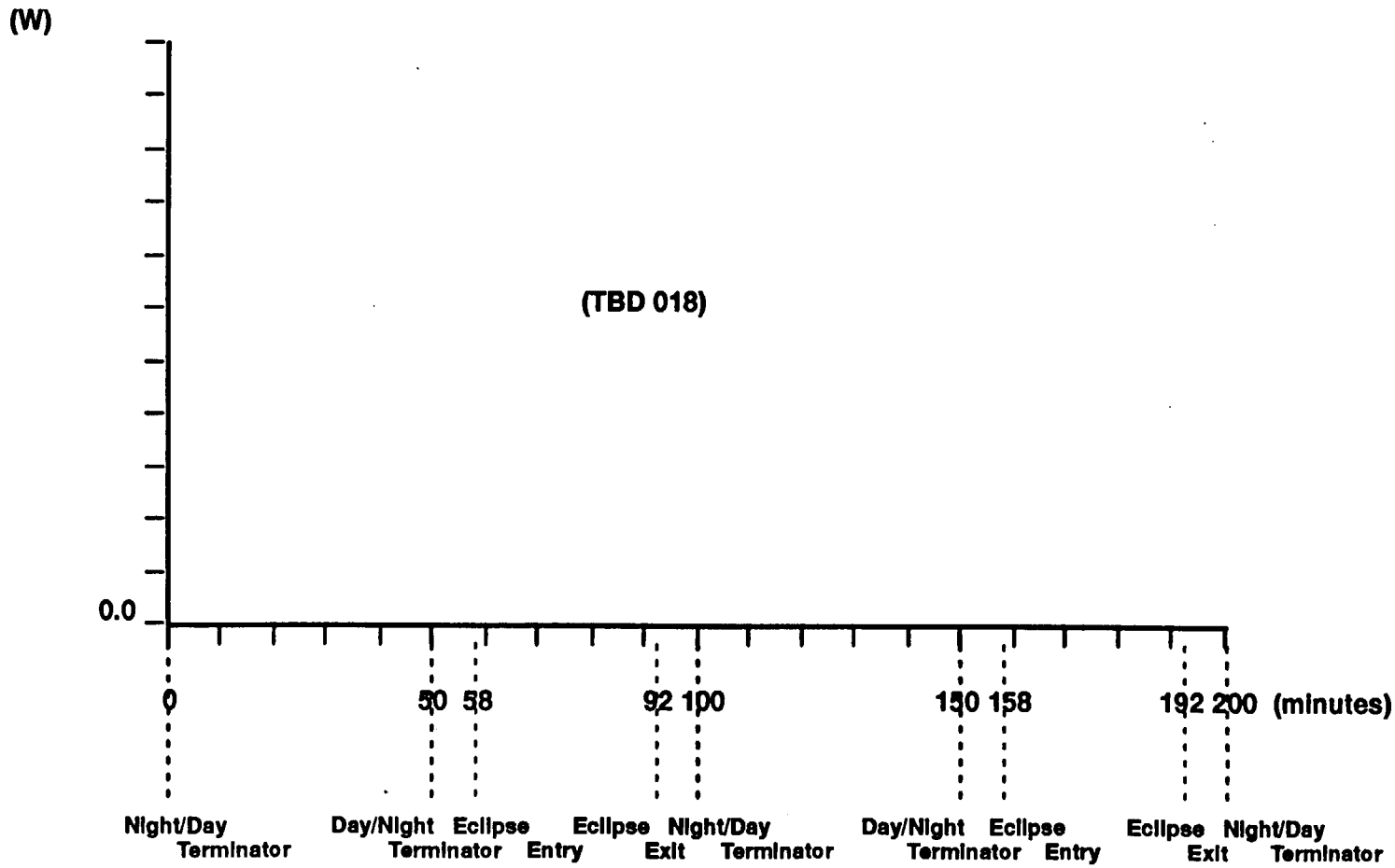

Notes:

4. Peak power in Safe Mode due to T&C Command Relay (5.6 W at 0.001 duty cycle). Magnitude and phasing shown are not to scale.
5. Electrical heater power dissipation is N/A.

Figure 5b. Power Dissipation Profile – Survival Mode

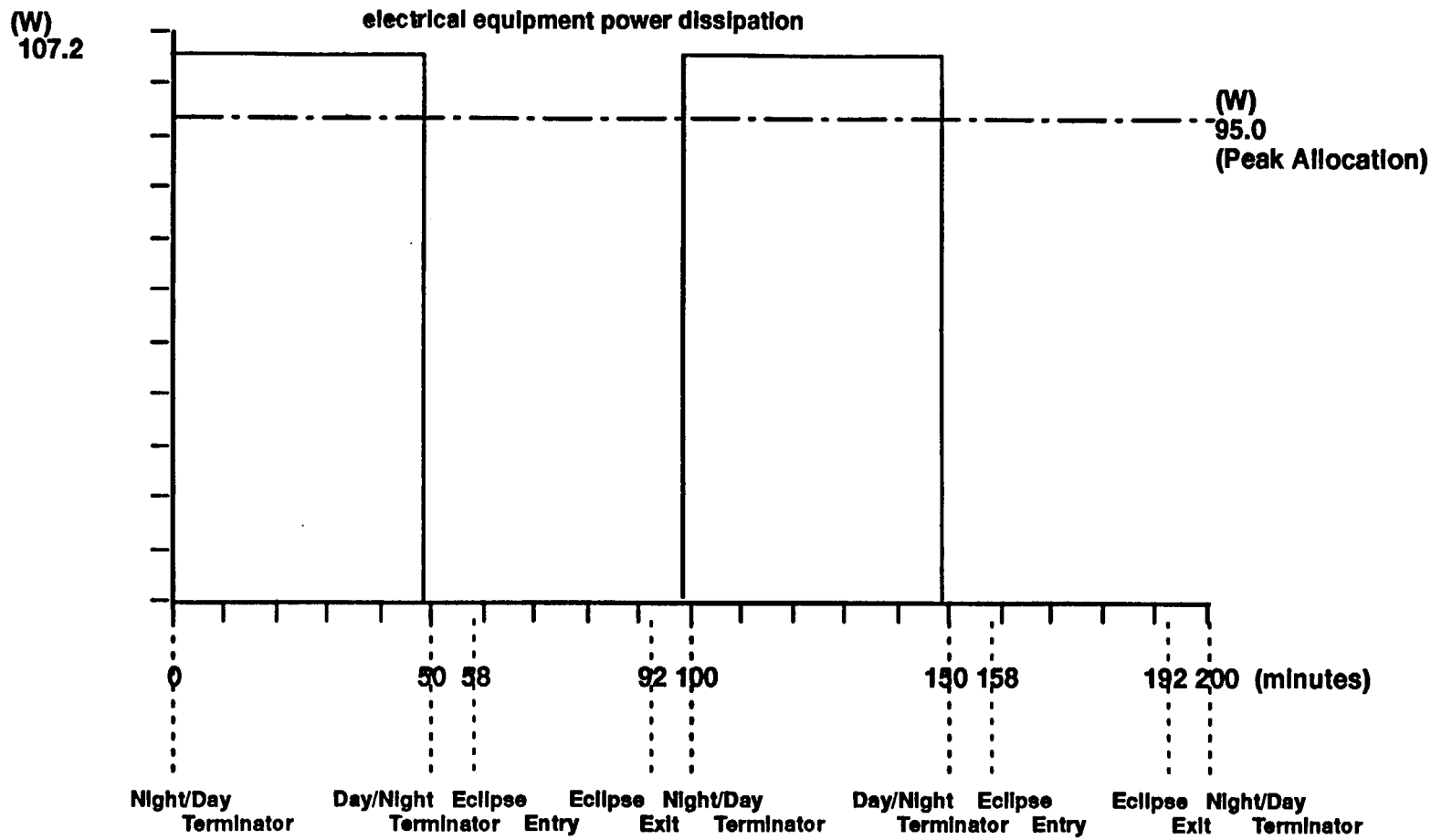

Notes:

6. Electrical heater power dissipation is **(TBD 019)** for local, global, & stereoscopic modes

Figure 5c. Power Dissipation Profile – Local, Global, & Stereoscopic Modes

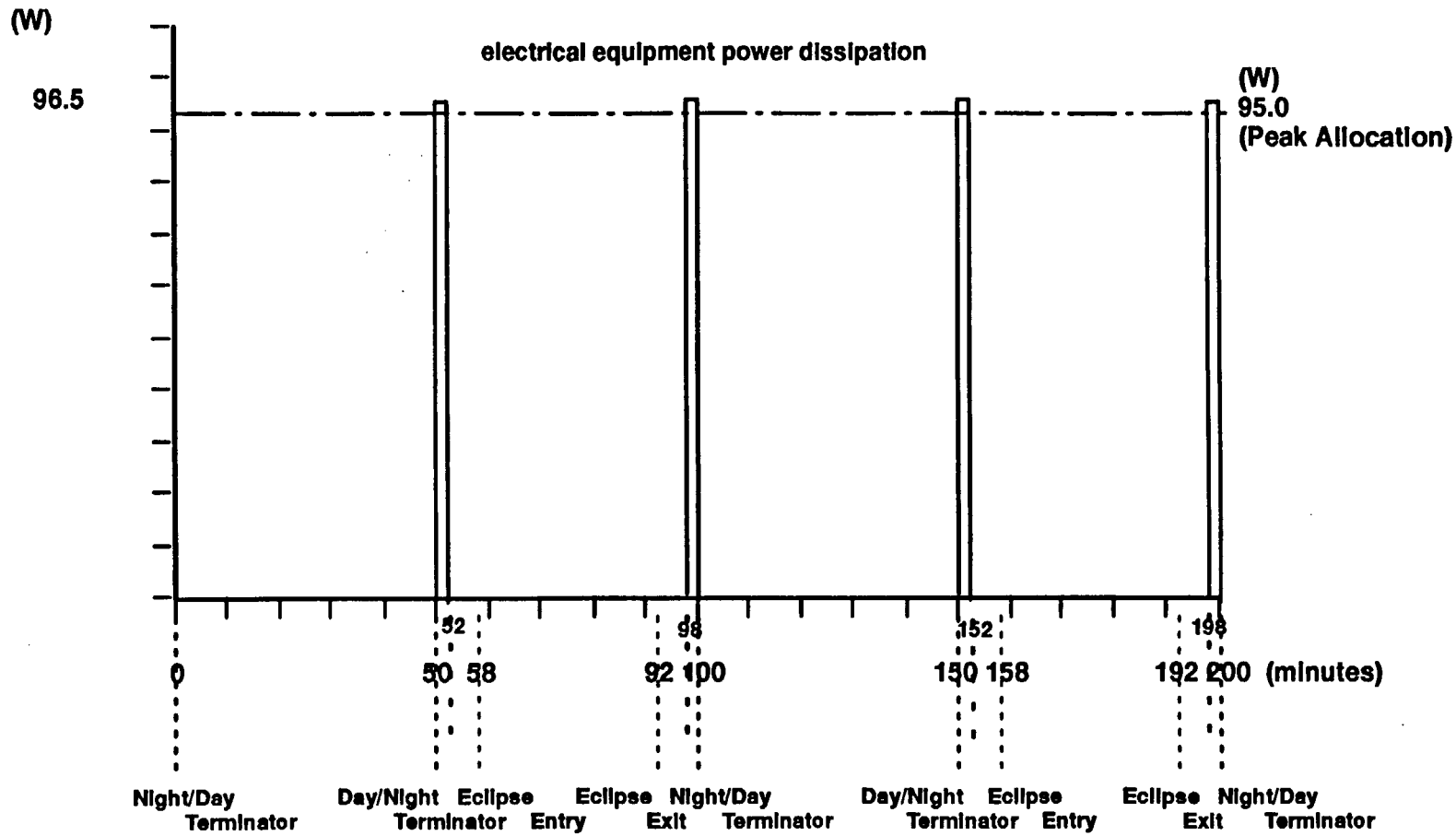

Notes:

7. Calibration twice per day for first two weeks, once per day for next two weeks, once per month thereafter
8. Electrical heater power dissipation is **(TBD 020)** for calibration mode.

Figure 5d. Power Dissipation Profile – Calibration Mode

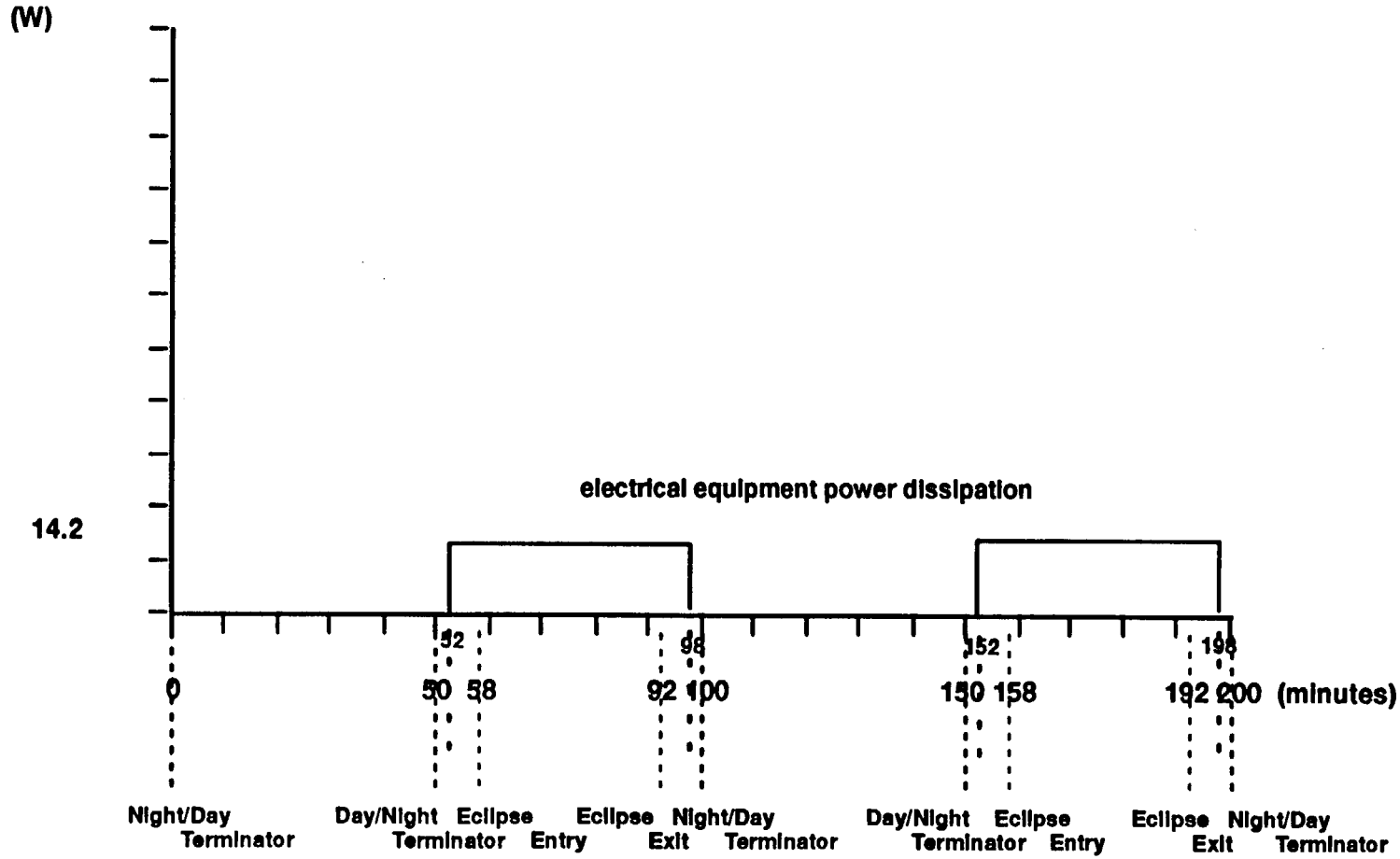

Notes:

9. Electrical heater power is **(TBD 021)** for standby mode.

Figure 5e. Power Dissipation Profile – Standby Mode

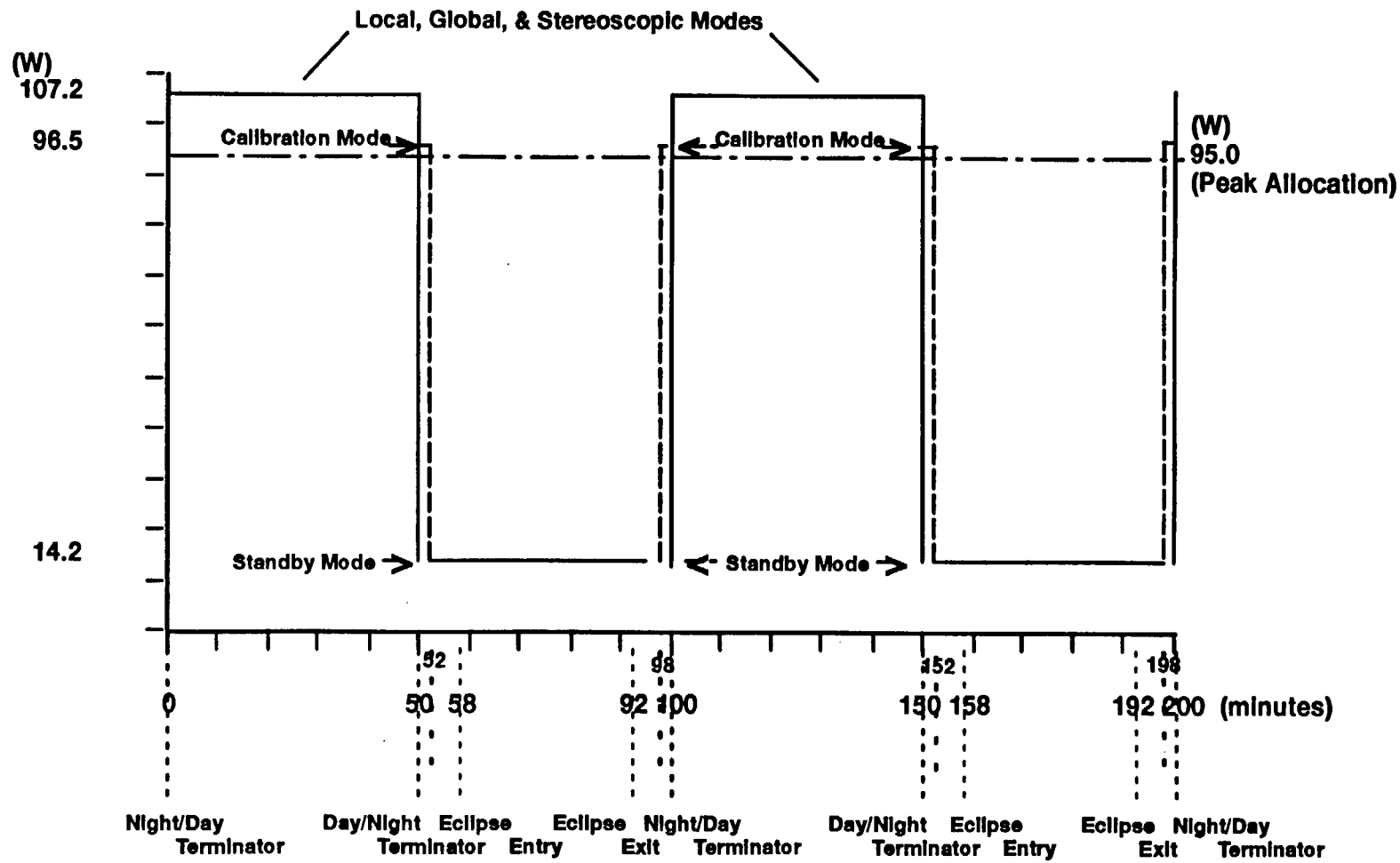

Figure 5f. Power Dissipation Profile – Operational Orbit Profile

Table IV. Thermal Math Model

	Revision			
	Preliminary			
Date	5–13–92			
Trasys88 file name	MISRV1–T			
SINDA85 file name	MISRV1–S			
Trasys88 Node #	58000–58049			
SINDA85 Node #	58000–58099			

PART 3 THERMAL CONTROL

Thermal Control Features

1. Heaters, coolers, control sensors, and temperature telemetry sensors are described in Table V.

2. Heater and sensor locations are shown in Figure 6.

3. Temperature limits are given in Table VI.

Table V. Temperature Control (TBD 022)

ID	
Function	
Type	
Configuration*	N/A
Location Device Control Sensor Telemetry Sensor	
Temperature Telemetry Sensor Acronym	
Heat Sink	
Control Method	
Power Source	
Dissipation (W) Peak Average	
Set Points (C) On Off	

Notes:

*	Coolers only
C	Centigrade
ID	Identifier
TBD	To be determined
W	Watt

(TBD 023)

Figure 6. Heater and Sensor Locations

Size	Code Ident No.		
A	49671	20008833	
			Sheet 35

Table VI. Temperature Limits (TBD 024)**

Mode	Average (C)	Telemetry Acronym MIS–Tx–_____		Telemetry Acronym MIS–Tx–_____	
		Minimum (C)	Maximum (C)	Minimum (C)	Maximum (C)
Launch					
Safe					
Survival (see Note 9)		–40	65		
Standby		–30	50		
Turn–on					
Local, Global, and Stereoscopic		10	40		
Calibration					

Notes:

** Where the majority of the table information is blank, the entire table has been identified as TBD in the table title. Table information will be filled in as it becomes available.

10. Telemetry identified by * is invalid when instrument power is off.

11. Survival limits represent temperatures beyond which the instrument cannot recover and meet performance requirements.

Table VII. Reference Documents

Document Number	Date	Document Title	Source

Next Assembly	Used on
20008830	EOS–AM

First Application
EOS–AM

Revisions		Rev	
Ltr	Description	Date	Appro
Initial ISSUE		8–20–93	CM/G

Revision Record Continued on Sheet

Contract No.	NAS5–32500
Written	B. Wilson
Date	8-19-93
Approved	F. Komro
Date	8-19-93
Approved	
Date	
Issued	G. Rauscher
Date	08/19/93

MARTIN MARIETTA

POST OFFICE BOX 800
PRINCETON, NEW JERSEY 08543-0
TELEPHONE 480-3400

Interface Control Drawing, Electrical, Tables, Earth Observing System AM Spacecraft to Multiangle Imaging SpectroRadiometer

Size	Code Ident No.	
A	49671	20008835

Sheet 1 of 68

PURPOSE

The Electrical Interface Control Drawing (EICD) Tables, 20008835, when executed, in conjunction with the EICD Schematic, 20008834, represents an agreement of the detailed implementation of the electrical interface between the Earth Observing System (EOS) AM Spacecraft and the Mulitangle Imaging SpectroRadiometer (MISR). These two drawings, together with the Mechanical Interface Control Drawing (MICD) Drawing, 20008831, MICD Tables, 20008832, Thermal Interface Control Drawing (TICD), 20008833, Integration and Test Interface Control Drawing (I&T ICD), 20008836, and Command and Telemetry Interface Control Drawing (C&T ICD), 20008837, describe the details of the interfaces between the EOS–AM Spacecraft and MISR. The top–level instrument Interface Control Drawing (ICD), 20008830, provides the instrument ICD tree and revision status for all sub–tier instrument ICDs.

SCOPE

The EICD Tables contain information necessary to fabricate and test the instrument harnesses. It provides definition of interface circuits, timing diagrams, BDU resource utilization, power profiles and transients, and electromagnetic sources and sensitivities. The EICD Schematic contains the instrument system schematic and grounding diagram.

Approval Signatures

IN ADDITION TO ECN AND CCB APPROVALS
ALL CHANGES ON THIS DRAWING SHALL HAVE THE APPROVAL AND THE FULL AGREEMENT OF THE PARTIES LISTED BELOW.

REV	Spacecraft Program Office	Date	Instrument Program Office	Date	Principal Investigator	Date
	signature on file M. Kavka	8–19–93	signature on file T. Reilly	7–28–93	signature on file D. Diner	7–28–93

Table of Contents

Section	Title	Sheet
	PURPOSE	2
	SCOPE	2
	Approval Signatures	2
1	HARNESSES	8
1.1	Harness Definition	8
1.2	Interface Circuits	8
1.3	Timing Diagrams	8
2	POWER	46
3	ELECTROMAGNETIC COMPATIBILITY	56

List of Figures

Figure No.	Title	Sheet
1	Harnes Block Diagram – MISR/Spacecraft Interface	9
2	Harness Block Diagram – MISR/Power	10
3	Harness Block Diagram – MISR/Command and Telemetry Interface	11
4	Harness Block Diagram – MISR/Science Interface	12
5	Power Interface Circuit	33
6	Command and Telemetry Bus Interface Circuit	34
7	Time Mark and Frequency Bus Interface Circuit	35
8	Science Data Interface Circuit	36
9	BDU Relay Drive Command Interface Circuit(s)	37
10	BDU Passive Bi–Level Telemetry Interface Circuit(s)	38
11	BDU Passive Analog Telemetry Interface Circuit(s)	39
12	Command and Telemetry Bus Timing Diagram	40
13	Time Mark and Frequency Bus Timing Diagram	41
14	Science Data Timing Diagram	42
15	BDU Relay Drive Command Timing Diagram(s)	43
16	BDU Passive Bi–Level Telemetry Timing Diagram(s)	44
17	BDU Passive Analog Telemetry Timing Diagram(s)	45
18	Power Consumption Profile – Safe Mode	47
19	Power Consumption Profile – Survival Mode	48
20	Power Consumption Profile – Local, Global, & Stereoscopic Modes	49
21	Power Consumption Profile – Calibration Mode	50
22	Power Consumption Profile – Standby Mode	51
23	Power Consumption Profile – Operational Orbit Profile	52
24	Turn–On Transient	53
25	Turn–Off Transient	54
26	Mode Switch Transient	55
27	Conducted Emissions Test Data – Power Leads (CE01)	58
28	Conducted Emissions Test Data – Power Leads (CE03)	59
29	Radiated Emissions Test Data – Electric Field (RE02)	60
30	Radiated Emissions Test Data – Magnetic Field (RE04)	61
31	Conducted Susceptibility Test Data – Power Leads (CS01)	62
32	Conducted Susceptibility Test Data – Power Leads (CS02)	63
33	Conducted Susceptibility Test Data – Power Leads (CS06)	64
34	Radiated Susceptibility Test Data – Magnetic Field (RS01)	65
35	Radiated Susceptibility Test Data – Electric Field (RS02)	66
36	Radiated Susceptibility Test Data – Electric Field (RS03)	67
37	Magnetic Properties Test Data	68

List of Tables

Table No.	Title	Sheet
I	Harness Length	13
II	Connector List	14
IIIa	MISPx: Power – Feed A Interconnections	16
IIIb	MISPx: Power – Feed B Interconnections	17
IIIc	MISPx: C&T Bus A Interconnections	18
IIId	MISPx: C&T Bus B S Interconnections	19
IIIe	MISPx: TM&F Bus – Side A Interconnections	20
IIIf	MISPx: TM&F Bus – Side B Interconnections	21
IIIg	MISPx: High Rate Data Link – Side A – Hi Interconnections	22
IIIh	MISPx: High Rate Data Link – Side A – Lo Interconnections	22
IIIi	MISPx: High Rate Data Link – Side B – Hi Interconnections	23
IIIj	MISPx: High Rate Data Link – Side B – Lo Interconnections	23
IIIk	MISPx: BDU Relay Drive Commands – Interconnections	24
IIIm	MISPx: BDU Passive Bi–Level Telemetry – Interconnections	27
IIIn	MISPx: BDU Passive Analog Telemetry – Interconnections	30
IV	Emissions	57
V	Susceptibility	57
VI	Magnetic Properties	57
VII	Magnetic Susceptibility	57
VIII	Reference Documents	68

TBD LOG

ITEM	SECTION	PAGE	SUBJECT	RESPONSIBLE	DUE
TBD 1	Figure 1	9	ICP Connector Numbers (13 Places)	S. Holaday (MMC)	6–30–94
TBD 2	Figure 1 Figure 2 Figure 3 Figure 4 Table I	9 10 11 12 13	Harness segment ID Numbers (5 Places)	S. Holaday (MMC)	12–30–94
TBD 3	Table I Figure 2 Figure 3 Figure 4	13 10 11 12	Total Number of Harness Segments and Connector Pairs	S. Holaday (MMC)	6–30–94
TBD 4	Table IIIa thru Table IIIm	16	Color	S. Holaday (MMC)	9–30–94
TBD 5	Figure 5	33	MISR Power Interface Circuit	B. Wilson (MMC)	10–29–93
TBD 6	Figure 12 thru Figure 17	42	Timing Diagrams (6 Places)	B. Wilson (MMC)	6–30–94
TBD 7	2	46	Test Point Pin and Connector Number For Fuse Verification	S. Holaday (MMC)	9–30–94
TBD 8	Figure 18 Figure 19	47	Power Consumption Profile – Safe Mode and Survival Modes (2 Places)	G. Francis (JPL)	10–29–93
TBD 9	Figure 20 Figure 21 Figure 22	48	Electrical Heater Power (3 Places)	G. Francis (JPL)	10–29–93
TBD 10	Figure 23 thru Figure 25	53	Transients (3 Places)	G. Francis (JPL)	EM test + 3 mos
TBD 11	Table V thru Table VIII	57	EMC (4 Places)	G. Francis (JPL)	EM test + 3 mos
TBD 12	Figure 26 thru Figure 36	58	EMC Test Data	G. Francis (JPL)	PFM Delivery

TBR LOG

ITEM	SECTION	PAGE	SUBJECT	RESPONSIBLE	DUE
TBR 1	1.1	8	Non Flight Connector Number Designation	S. Holaday (MMC)	12–30–94
TBD 2	Table II	14	TM&F Bus Connector Type (4 Places)	S. Holaday (MMC)	9–30–93
TBR 3	Figure 6	32	C&T Bus Interface Circuit	G. Francis (JPL)	10–29–93
TBR 4	Figure 7	33	TM&F Bus Interface Circuit	G. Francis (JPL)	10–29–93
TBR 5	Figure 8	34	Science Data Interface Circuit	G. Francis (JPL)	10–29–93
TBR 6	Figure 9	35	Relay Drive Command Interface Circuit	G. Francis (JPL)	10–29–93
TBR 7	Figure 10	36	Passive Bi–Level Interface Circuit	G. Francis (JPL)	10–29–93
TBR 8	Figure 11	37	Passive Analog Interface Circuit	G. Francis (JPL)	10–29–93

1 HARNESSES

1.1 Harness Definition

1. The block diagram of the harnesses utilized by MISR are shown in Figures 1–4. (All harnesses are supplied by the Spacecraft Integrator.)

2. The harness lengths are given in Table I. The harness length given is the total length of the harness from the instrument to the spacecraft component providing or receiving the signal. Also included in Table I is the total number of connector pairs present in a harness including the connector mating half on the instrument and on the Spacecraft component. Each harness is reference by the Harness Segment ID between the instrument and the Interface Connector Panel (ICP) shown in Figure 1.

3. The list of connectors mating to MISR used by the Spacecraft Integrator to fabricate the MISR harnesses is shown in Table II.

   a. Spacecraft harness connector numbers are assigned to denote the subsystem and component. Non–flight connector numbers are preceded by an X. **(TBR 1)**

   b. The interconnections are shown in Tables IIIa–IIIn. The following legend is used for wire type:

Coax	Coaxial transmission line
SC	Single conductor, unshielded
SCS	Single conductor, shielded
Tn	Twisted bundle of n wires, unshielded
TnS	Twisted bundle of n wires, shielded
Twinax	Twinaxial transmission line
Triax	Triaxial transmission line

   c. All harnesses which are required by PN20005869, EOS–AM Spacecraft EMC Control Plan, to have an overall outer shield have either a copper tape over–wrap or a braid shield.

      The copper tape is actually copper–plated mylar which is one inch wide. The tape is then folded over 1/8 inch, making it 7/8 inch wide. The tape is 0.0017 inches thick (0.0007 inch copper on 0.001 inch mylar). The wrap is lapped half its width.

      Cables using a braid shield use braids similar to MIL–C–27500.

1.2 Interface Circuits

The interface circuits are shown in Figures 5 through 11.

1.3 Timing Diagrams

The timing diagrams are shown in Figures 12 through 17.

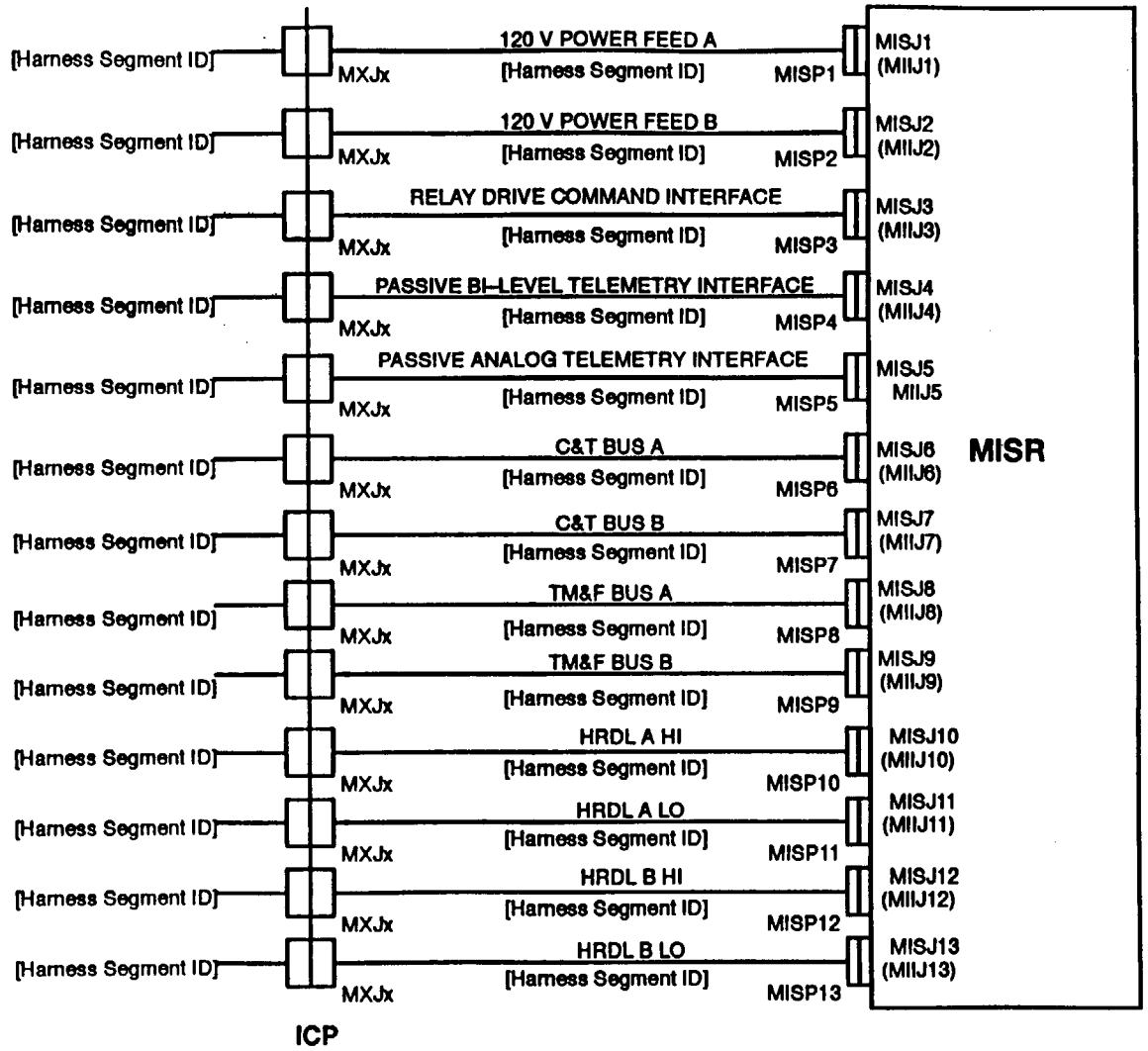

Notes:

ICP – Interface Connector Panel

1. ICP Connector numbers are **(TBD 1)**.
2. Harness Segment ID numbers are **(TBD 2)**.

Figure 1. Harness Block Diagram –MISR/Spacecraft Interface

Size A | Code Ident No. 49671 | 20008835 | Sheet 9

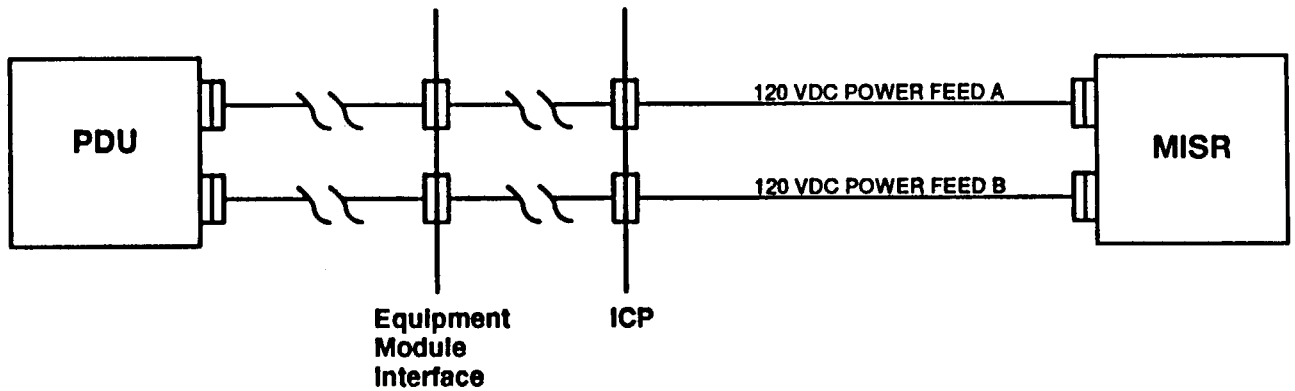

Notes:

ICP – Interface Connector Panel

PDU – Power Distribution Unit

1. The total number of harness segments and connector pairs is **(TBD 3)**

Figure 2. Harness Block Diagram –MISR/Power

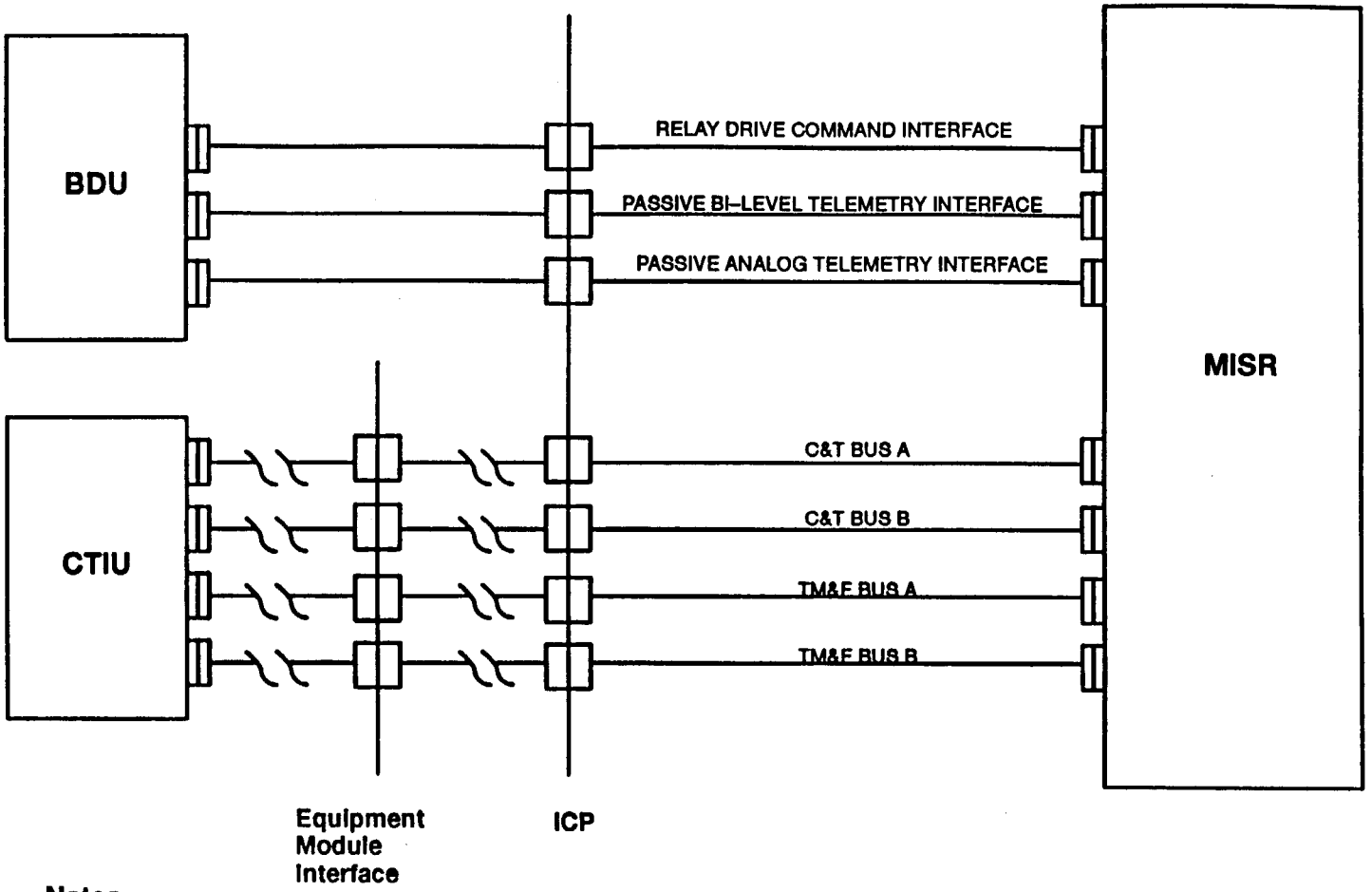

Notes:

ICP – Interface Connector Panel

BDU – Bus Data Unit

CTIU – Command and Telemetry Interface Unit

1. The total number of harness segments and connector pairs is **(TBD 3)**

Figure 3. Harness Block Diagram – MISR/Command and Telemetry Interface

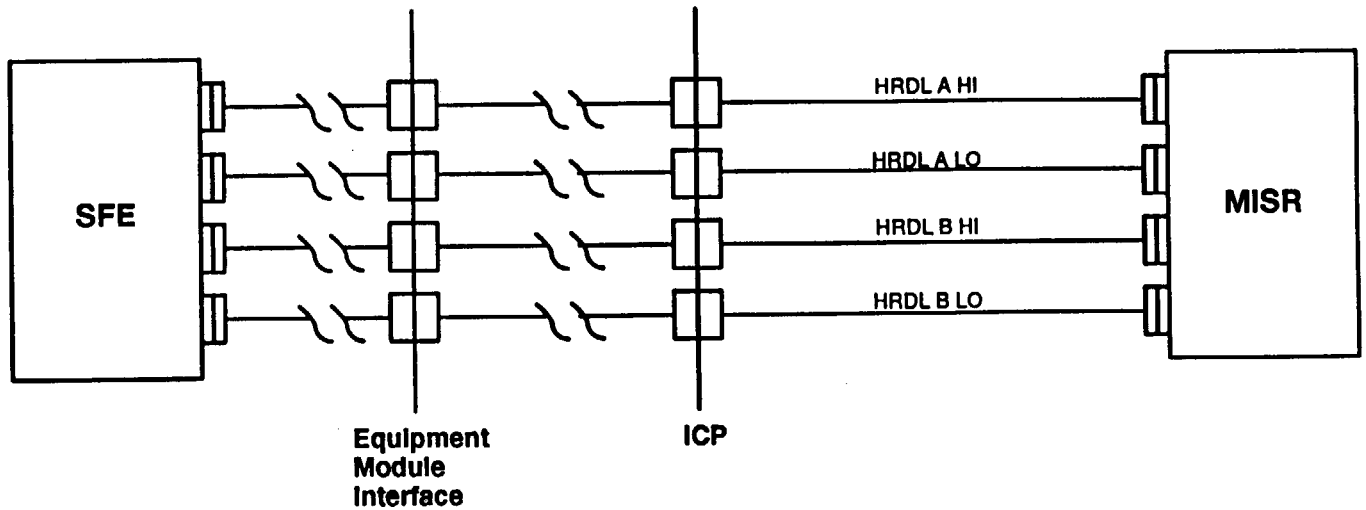

Notes:

ICP – Interface Connector Panel

SFE – Science Formatting Equipment

1. The total number of harness segments and connector pairs is **(TBD 3)**

Figure 4. Harness Block Diagram – MISR/Science Interface

Table I. Harness Length

Description	Instrument Harness Segment ID (TBD 2)	Total # of Segments (TBD 3)	Total # of Connector Pairs (TBD 3)	Total Length (meters) (TBD 3)	Figure #
120 V Power Feed A					2
120 V Power Feed B					2
Relay Drive Command Interface					3
Passive Bi–Level Telemetry Interface					3
Passive Analog Telemetry Interface					3
C&T Bus A					3
C&T Bus B					3
TM&F Bus A					3
TM&F Bus B					3
HRDL A HI					4
HRDL A LO					4
HRDL B HI					4
HRDL B LO					4

Table II. Connector List

Component Connector		Harness Connector		MICD Drawing Location		Function
Designation	Type	Designation	Type	Sheet	Zone	
MISJ1	MS27497E12F98P	MISP1	MS27484T12F98S	18	5D	120V Power – Feed A
MISJ2	MS27497E12F98PA	MISP2	MS27484T12F98SA	18	5D	120V Power – Feed B
MISJ6	RAYCHEM DK–621–0412P	MISP6	RAYCHEM DK–621–0411S	18	5D	Command and Telemetry Bus – Side A
MISJ7	RAYCHEM DK–621–0412P	MISP7	RAYCHEM DK–621–0411S	18	5D	Command and Telemetry Bus – Side B
MISJ8	TROMPETER BJ3159AC–221 **(TBR 002)**	MISP8	TROMPETER BJ3155AC–221 **(TBR 002)**	18	5D	Time Mark and Frequency Bus – Side A
MISJ9	TROMPETER BJ3159AC–221 **(TBR 002)**	MISP9	TROMPETER BJ3155AC–221 **(TBR 002)**	18	5D	Time Mark and Frequency Bus – Side B

Table II. Connector List (cont'd)

Component Connector		Harness Connector		MICD Drawing Location		Function
Designation	Type	Designation	Type	Sheet	Zone	
OR						
MISJ10	Gore R42	MISP10	Gore S01	18	5D	High Rate Data Link – Side A – Hi
MISJ11	Gore R42	MISP11	Gore S01	18	5D	High Rate Data Link – Side A – Lo
MISJ12	Gore R42	MISP12	Gore S01	18	5D	High Rate Data Link – Side B – Hi
MISJ13	Gore R42	MISP13	Gore S01	18	5D	High Rate Data Link – Side B – Lo
MISJ3	MS27497E14F35S (ST 11949–10–35S)	MISP3	MS27484T14F35P	18	5D	MISR Relay Drive Commands
MISJ4	MS27497E14F35SA (ST 11949–10–35S)	MISP4	MS27484T14F35PA	18	5D	MISR Passive Bi–Level Telemetry
MISJ5	MS27497E14F35SB (ST 11949–10–35S)	MISP5	MS27484T14F35PB	18	5D	MISR Passive Analog Telemetry

Table IIIa. MISP1: Power – Feed A Interconnections

Pin	Function	Destination		Wire Size	Wire Type	Twist Group	Shield Group	Color (TBD 4)	Interface Circuit (Figure #)	Timing Diagram (Figure #)	Notes
		Connector	Pin								
A	MISR +120 V Power Feed A–2	MXJx	A	20	T5S	001	001		5	N/A	
B	Spare										
C	Spare										
D	Spare										
E	MISR +120 V Power Feed Return A–2	MXJx	E	20	T5S	001	001		5	N/A	
F	MISR +120 V Power Feed Return A–1	MXJx	F	20	T5S	001	001		5	N/A	
G	MISR Fault Gnd A	MXJx	G	20	T5S	001	001		5	N/A	
H	MISR +120 V Power Feed A–1	MXJx	H	20	T5S	001	001		5	N/A	
J	Spare										
K	Spare										

Notes:

N/A Not applicable

1. Interface cable outer shield bonded to shell of the harness connector.

Table IIIb. MISP2: Power – Feed B Interconnections

Pin	Function	Destination		Wire Size	Wire Type	Twist Group	Shield Group	Color	Interface Circuit	Timing Diagram	Notes
		Connector	Pin					(TBD 4)	(Figure #)	(Figure #)	
A	MISR +120 V Power Feed B –2	MXJx	A	20	T5S	001	001		5	N/A	
B	Spare										
C	Spare										
D	Spare										
E	MISR +120 V Power Feed Return B–2	MXJx	E	20	T5S	001	001		5	N/A	
F	MISR +120 V Power Feed Return B–1	MXJx	F	20	T5S	001	001		5	N/A	
G	MISR Fault Gnd B	MXJx	G	20	T5S	001	001		5	N/A	
H	MISR +120 V Power Feed B–1	MXJx	H	20	T5S	001	001		5	N/A	
J	Spare										
K	Spare										

Notes:

N/A Not applicable

1. Interface cable outer shield bonded to shell of the harness connector.

Table IIIc. MISP6: C&T Bus A Interconnections

Contact	Function	Destination		Wire Size	Wire Type	Twist Group	Shield Group	Color (TBD 4)	Interface Circuit (Figure #)	Timing Diagram (Figure #)	Notes
		Connector	Pin								
Center	MISR C&T Bus A Hi	MXJx	Center	24	Twin ax	N/A	N/A		6	12	1
Intermediate	MISR C&T Bus A Lo	MXJx	Intermediate	24	Twin ax	N/A	N/A		6	12	1
Outer shield	MISR C&T Bus A Shld	MXJx	Outer Shield	N/A	Twin ax	N/A	N/A		6	12	1

Notes:

1. MXJx is a single triaxial contact connector.

Table IIId. MISP7: C&T Bus B Interconnections

Contact	Function	Destination		Wire Size	Wire Type	Twist Group	Shield Group	Color (TBD 4)	Interface Circuit (Figure #)	Timing Diagram (Figure #)	Notes
		Connector	Pin								
Center	MISR C&T Bus B Hi	MXJx	Center	24	Twin ax	N/A	N/A		6	12	1
Intermediate	MISR C&T Bus B Lo	MXJx	Intermediate	24	Twin ax	N/A	N/A		6	12	1
Outer shield	MISR C&T Bus B Shld	MXJx	Outer Shield	N/A	Twin ax	N/A	N/A		6	12	1

Notes:

1. MXJx is a single triaxial contact connector.

Table IIIe. MISP8: TM&F Bus – Side A Interconnections

Contact	Function	Destination		Wire Size	Wire Type	Twist Group	Shield Group	Color (TBD 4)	Interface Circuit (Figure #)	Timing Diagram (Figure #)	Notes
		Connector	Pin								
Center	MISR TM&F Bus A Hi	MXJx	Center	24	Twin ax	N/A	N/A		7	13	1
Intermediate	MISR TM&F Bus A Lo	MXJx	Intermediate	24	Twin ax	N/A	N/A		7	13	1
Outer shield	MISR TM&F Bus A Shld	MXJx	Outer Shield	N/A	Twin ax	N/A	N/A		7	13	1

Notes:

1. MXJx is a single triaxial contact connector.

Table IIIf. MISP9: TM&F Bus – Side B Interconnections

Contact	Function	Destination		Wire Size	Wire Type	Twist Group	Shield Group	Color (TBD 4)	Interface Circuit (Figure #)	Timing Diagram (Figure #)	Notes
		Connector	Pin								
Center	MISR TM&F Bus B Hi	MXJx	Center	24	Twin ax	N/A	N/A		7	13	1
Intermediate	MISR TM&F Bus B Lo	MXJx	Intermediate	24	Twin ax	N/A	N/A		7	13	1
Outer shield	MISR TM&F Bus B Shld	MXJx	Outer Shield	N/A	Twin ax	N/A	N/A		7	13	1

Notes:

1. MXJx is a single triaxial contact connector.

Table IIIg. MISP10: High Rate Data Link – Side A – Hi Interconnections

Contact	Function	Destination		Wire Size	Wire Type	Twist Group	Shield Group	Color (TBD 4)	Interface Circuit (Figure #)	Timing Diagram (Figure #)	Notes
		Connector	Pin								
Center	MISR HRDL A Hi	MXJx	Center	16	G2 Coax	N/A	N/A		8	14	1
Outer shield	MISR HRDL A Hi Shld	MXJx	Outer Shield	N/A	G2 Coax	N/A	N/A		8	14	1

Notes:

1. MXJx is a single coaxial contact connector.

Table IIIh. MISP11: High Rate Data Link – Side A – Lo Interconnections

Contact	Function	Destination		Wire Size	Wire Type	Twist Group	Shield Group	Color (TBD 4)	Interface Circuit (Figure #)	Timing Diagram (Figure #)	Notes
		Connector	Pin								
Center	MISR HRDL A Lo	MXJx	Center	16	G2 Coax	N/A	N/A		8	14	1
Outer shield	MISR HRDL A Lo Shld	MXJx	Outer Shield	N/A	G2 Coax	N/A	N/A		8	14	1

Notes:

1. MXJx is a single coaxial contact connector.

Table IIII. MISP12: High Rate Data Link – Side B – Hi Interconnections

Contact	Function	Destination		Wire Size	Wire Type	Twist Group	Shield Group	Color (TBD 4)	Interface Circuit (Figure #)	Timing Diagram (Figure #)	Notes
		Connector	Pin								
Center	MISR HRDL B Hi	MXJx	Center	16	G2 Coax	N/A	N/A		8	14	1
Outer shield	MISR HRDL B Hi Shld	MXJx	Outer Shield	N/A	G2 Coax	N/A	N/A		8	14	1

Notes:

1. MXJx is a single coaxial contact connector.

Table IIIJ. MISP13: High Rate Data Link – Side B – Lo Interconnections

Contact	Function	Destination		Wire Size	Wire Type	Twist Group	Shield Group	Color (TBD 4)	Interface Circuit (Figure #)	Timing Diagram (Figure #)	Notes
		Connector	Pin								
Center	MISR HRDL B Lo	MXJx	Center	16	G2 Coax	N/A	N/A		8	14	1
Outer shield	MISR HRDL B Lo Shld	MXJx	Outer Shield	N/A	G2 Coax	N/A	N/A		8	14	1

Notes:

1. MXJx is a single coaxial contact connector.

Table IIIk. MISP3: Relay Drive Commands – Interconnections

Pin	Function	Destination		Wire Size	Wire Type	Twist Group	Shield Group	Color	Interface Circuit	Timing Diagram	Notes
		Connector	Pin					(TBD 4)	(Figure #)	(Figure #)	
1	PREREG A SEL	MXJx		24	T2	001	001		9	15	
2	PREREG A SEL RTN	MXJx		24	T2	001	001		9	15	
3	Spare	MXJx									
4	PREREG A ON	MXJx		24	T2	002	001		9	15	
5	PREREG A ON RTN	MXJx		24	T2	002	001		9	15	
6	Spare	MXJx									
7	Spare	MXJx									
8	PREREGSEL B	MXJx		24	T2	003	001		9	15	
9	PREREG B SEL RTN	MXJx		24	T2	003	001		9	15	
10	Spare	MXJx									
11	PREREG B ON	MXJx		24	T2	004	001		9	15	
12	PREREG B ON RTN	MXJx		24	T2	004	001		9	15	
13	Spare	MXJx									
14	Spare	MXJx									
15	PREREGS OFF	MXJx		24	T2	005	001		9	15	
16	PREREGS OFF RTN	MXJx		24	T2	005	001		9	15	

Table IIIk. MISP3: Relay Drive Commands – Interconnections (cont'd.)

Pin	Function	Destination		Wire Size	Wire Type	Twist Group	Shield Group	Color (TBD 4)	Interface Circuit (Figure #)	Timing Diagram (Figure #)	Notes
		Connector	Pin								
17	Spare	MXJx									
18	Spare	MXJx									
19	Spare	MXJx									
20	Spare	MXJx									
21	Spare	MXJx									
22	Spare	MXJx									
23	Spare	MXJx									
24	Spare	MXJx									
25	Spare	MXJx									
26	SUR HTR A ON	MXJx		24	T2	006	001		9	15	
27	SUR HTR A ON RTN	MXJx		24	T2	006	001		9	15	
28	Spare	MXJx									
29	Spare	MXJx									
30	SUR HTR B ON	MXJx		24	T2	007	001		9	15	
31	SUR HTR B ON RTN	MXJx		24	T2	007	001		9	15	
32	Spare	MXJx									

Table IIIk. MISP3: Relay Drive Commands – Interconnections (cont'd.)

Pin	Function	Destination		Wire Size	Wire Type	Twist Group	Shield Group	Color	Interface Circuit	Timing Diagram	Notes
		Connector	Pin					(TBD 4)	(Figure #)	(Figure #)	
33	Spare	MXJx									
34	SUR HTR OFF	MXJx		24	T2	008	001		9	15	
35	SUR HTR OFF RTN	MXJx		24	T2	008	001		9	15	
36	Spare										
37	Spare										

Notes:

1. All twisted pair signals will be enclosed in an overall shield.
2. Interface cable outer shield bonded to shell of the harness connector.

Table IIIm. MISP4: Passive Bi–Level Telemetry – Interconnections

Pin	Function	Destination		Wire Size	Wire Type	Twist Group	Shield Group	Color	Interface Circuit	Timing Diagram	Notes
		Connector	Pin					(TBD 4)	(Figure #)	(Figure #)	
1	COVER OPEN–HI	MXJx		24	T2	001	002		10	16	1
2	COVER OPEN–LO	MXJx		24	T2	001	002		10	16	1
3	Spare	MXJx									
4	Spare	MXJx									
5	COVER CLOSED–HI	MXJx		24	T2	002	002		10	16	1
6	COVER CLOSED–LO	MXJx		24	T2	002	002		10	16	1
7	Spare	MXJx									
8	Spare	MXJx									
9	FWDCALPANDEP–HI	MXJx		24	T2	003	002		10	16	1
10	FWDCALPANDEP–LO	MXJx		24	T2	003	002		10	16	1
11	Spare	MXJx									
12	Spare	MXJx									
13	FWDCALPANSTO–HI	MXJx		24	T2	004	002		10	16	1
14	FWDCALPANSTO–LO	MXJx		24	T2	004	002		10	16	1
15	Spare	MXJx									

Table IIIm. MISP4: Passive Bi–Level Telemetry – Interconnections (cont'd)

Pin	Function	Destination		Wire Size	Wire Type	Twist Group	Shield Group	Color (TBD 4)	Interface Circuit (Figure #)	Timing Diagram (Figure #)	Notes
		Connector	Pin								
16	Spare	MXJx									
17	AFTCALPANDEP–HI	MXJx		24	T2	005	002		10	16	1
18	Spare	MXJx									
19	AFTCALPANDEP–LO	MXJx		24	T2	005	002		10	16	1
20	Spare	MXJx									
21	Spare	MXJx									
22	Spare	MXJx									
23	Spare	MXJx									
24	Spare	MXJx									
25	Spare	MXJx									
26	Spare	MXJx									
27	Spare	MXJx									
28	Spare	MXJx									
29	Spare	MXJx									
30	Spare	MXJx									
31	AFTCALPANSTO–HI	MXJx		24	T2	006	002		10	16	1
32	AFTCALPANSTO–LO	MXJx		24	T2	006	002		10	16	1

Table IIIm. MISP4: Passive Bi–Level Telemetry – Interconnections (cont'd)

Pin	Function	Destination		Wire Size	Wire Type	Twist Group	Shield Group	Color (TBD 4)	Interface Circuit (Figure #)	Timing Diagram (Figure #)	Notes
		Connector	Pin								
33	Spare	MXJx									
34	Spare	MXJx									
35	GONIOSTO–HI	MXJx		24	T2	007	002		10	16	1
36	GONIOSTO–LO	MXJx		24	T2	007	002		10	16	1
37	Spare	MXJx									

Notes:

1. All twisted pair signals will be enclosed in an overall shield.
2. Interface cable outer shield bonded to shell of the harness connector.

Table IIIn. MISP5: Passive Analog Telemetry – Interconnections

Pin	Function	Destination		Wire Size	Wire Type	Twist Group	Shield Group	Color (TBD 4)	Interface Circuit (Figure #)	Timing Diagram (Figure #)	Notes
		Connector	Pin								
1	+Z Radiator Temp	MXJx		24	T2	008	003		11	17	1
2	+Z Radiator Temp RTN	MXJx		24	T2	008	003		11	17	1
3	Spare	MXJx									
4	–Y Radiator Temp	MXJx		24	T2	009	003		11	17	1
5	–Y Radiator Temp RTN	MXJx		24	T2	009	003		11	17	1
6	Spare	MXJx									
7	Optical Bench Temp #1 (–X)	MXJx		24	T2	010	003		11	17	1
8	Optical Bench Temp#1 (–X) RTN	MXJx		24	T2	010	003		11	17	1
9	Spare	MXJx									
10	Optical Bench Temp #2 (+X)	MXJx		24	T2	011	003		11	17	1
11	Optical Bench Temp #2 (+X) RTN	MXJx		24	T2	011	003		11	17	1
12	Spare	MXJx									

Table IIIn. MISP5: Passive Analog Telemetry – Interconnections (cont'd)

Pin	Function	Destination		Wire Size	Wire Type	Twist Group	Shield Group	Color (TBD 4)	Interface Circuit (Figure #)	Timing Diagram (Figure #)	Notes
		Connector	Pin								
13	Optical Bench Temp#3 (Centered)	MXJx		24	T2	012	003		11	17	1
14	Optical Bench Temp#3 (Centered) RTN	MXJx		24	T2	012	003		11	17	1
15	Spare	MXJx									
16	D Aft Camera PS Temp	MXJx		24	T2	013	003		11	17	1
17	D Aft Camera PS Temp RTN	MXJx		24	T2	013	003		11	17	1
18	Spare	MXJx									
19	Computer A Temp	MXJx		24	T2	014	003		11	17	1
20	Computer A Temp RTN	MXJx		24	T2	014	003		11	17	1
21	Spare	MXJx									
22	Spare	MXJx									
23	Spare	MXJx									
24	Spare	MXJx									

Table IIIn. MISP5: Passive Analog Telemetry – Interconnections (cont'd)

Pin	Function	Destination		Wire Size	Wire Type	Twist Group	Shield Group	Color (TBD 4)	Interface Circuit (Figure #)	Timing Diagram (Figure #)	Notes
		Connector	Pin								
25	Spare	MXJx									
26	Spare	MXJx									
27	Spare	MXJx									
28	Spare	MXJx									
29	Spare	MXJx									
30	Spare	MXJx									
31	Spare	MXJx									
32	Spare	MXJx									
33	Spare	MXJx									
34	Spare	MXJx									
35	Spare	MXJx									
36	Spare	MXJx									
37	Spare	MXJx									

Notes:

1. All twisted pair signals will be enclosed in an overall shield.
2. Interface cable outer shield bonded to shell of the harness connector.

(TBD 5)

Figure 5. Power Interface Circuit

Size	Code Ident No.		
A	49671	20008835	
			Sheet 33

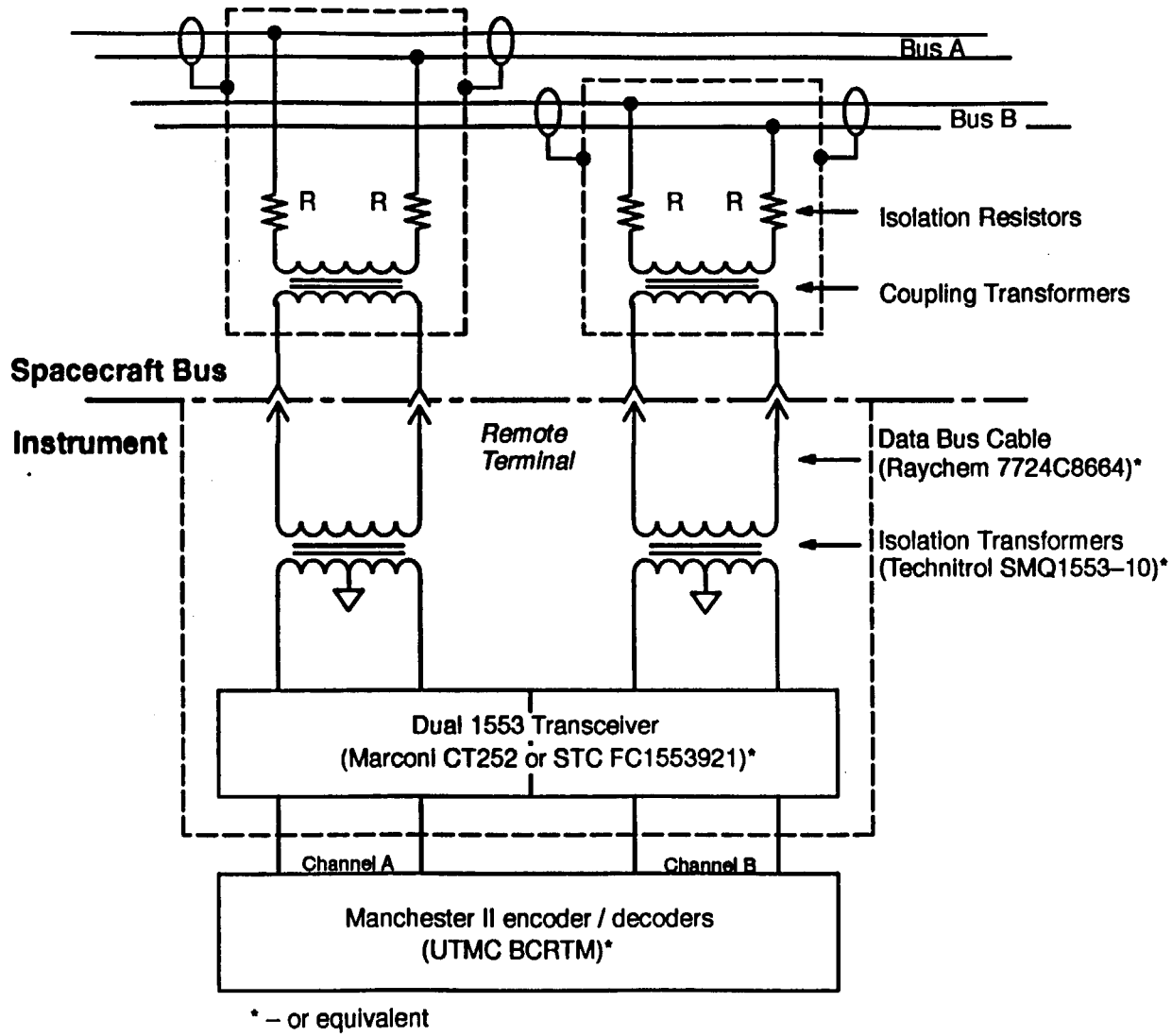

Figure 6. Command and Telemetry Bus Interface Circuit (TBR 3)

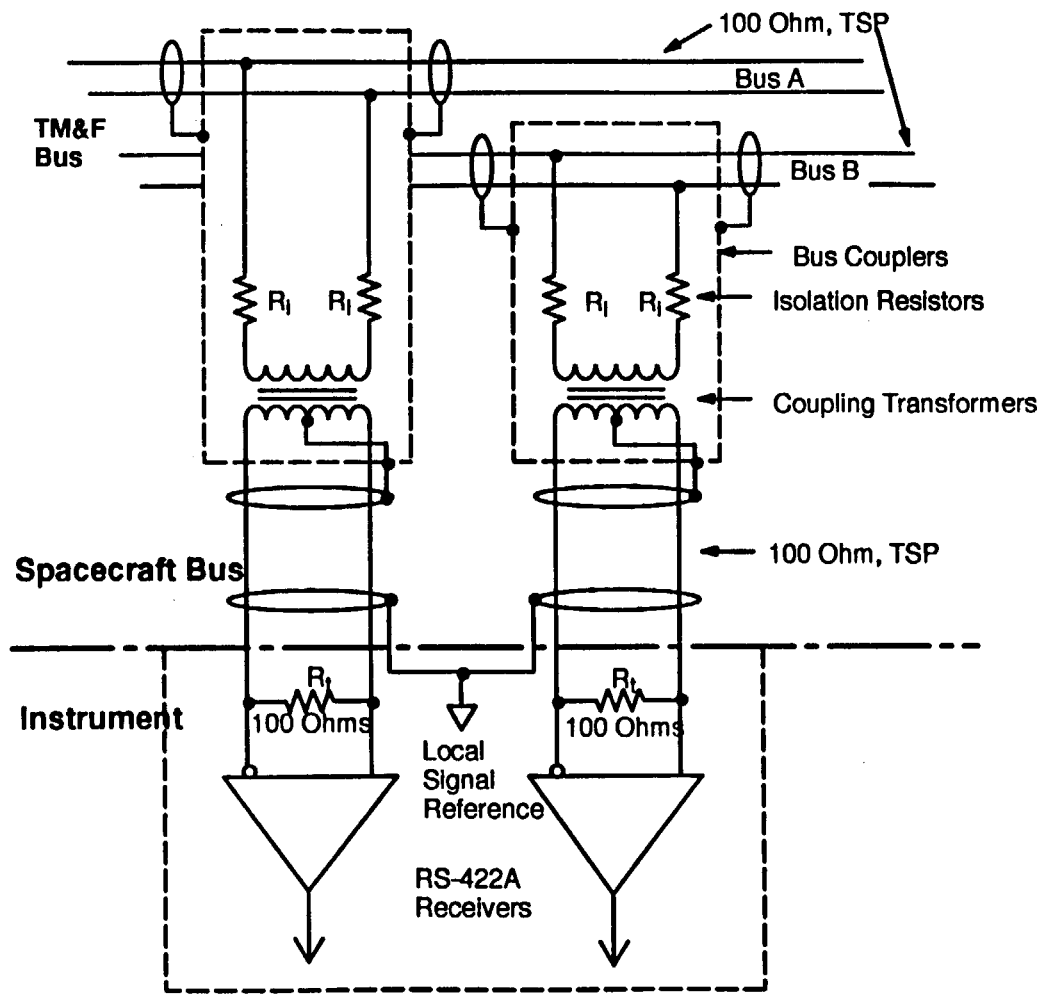

Figure 7. Time Mark and Frequency Bus Interface Circuit (TBR 4)

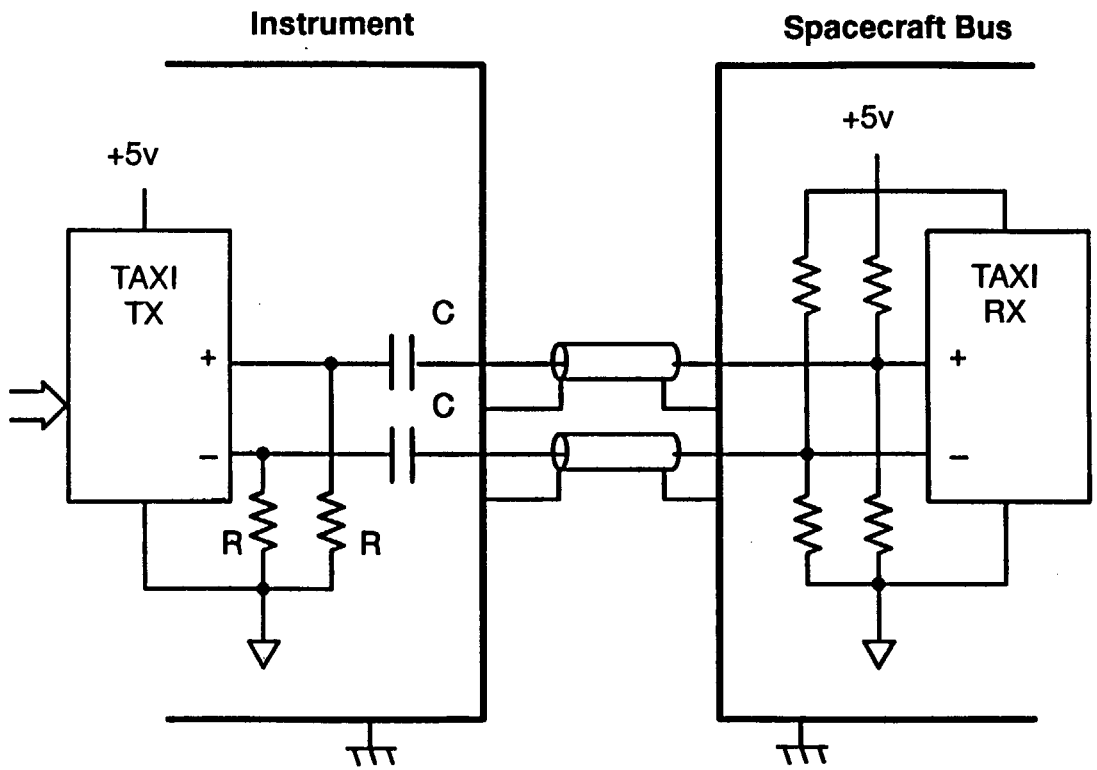

Figure 8. Science Data Interface Circuit (TBR 5)

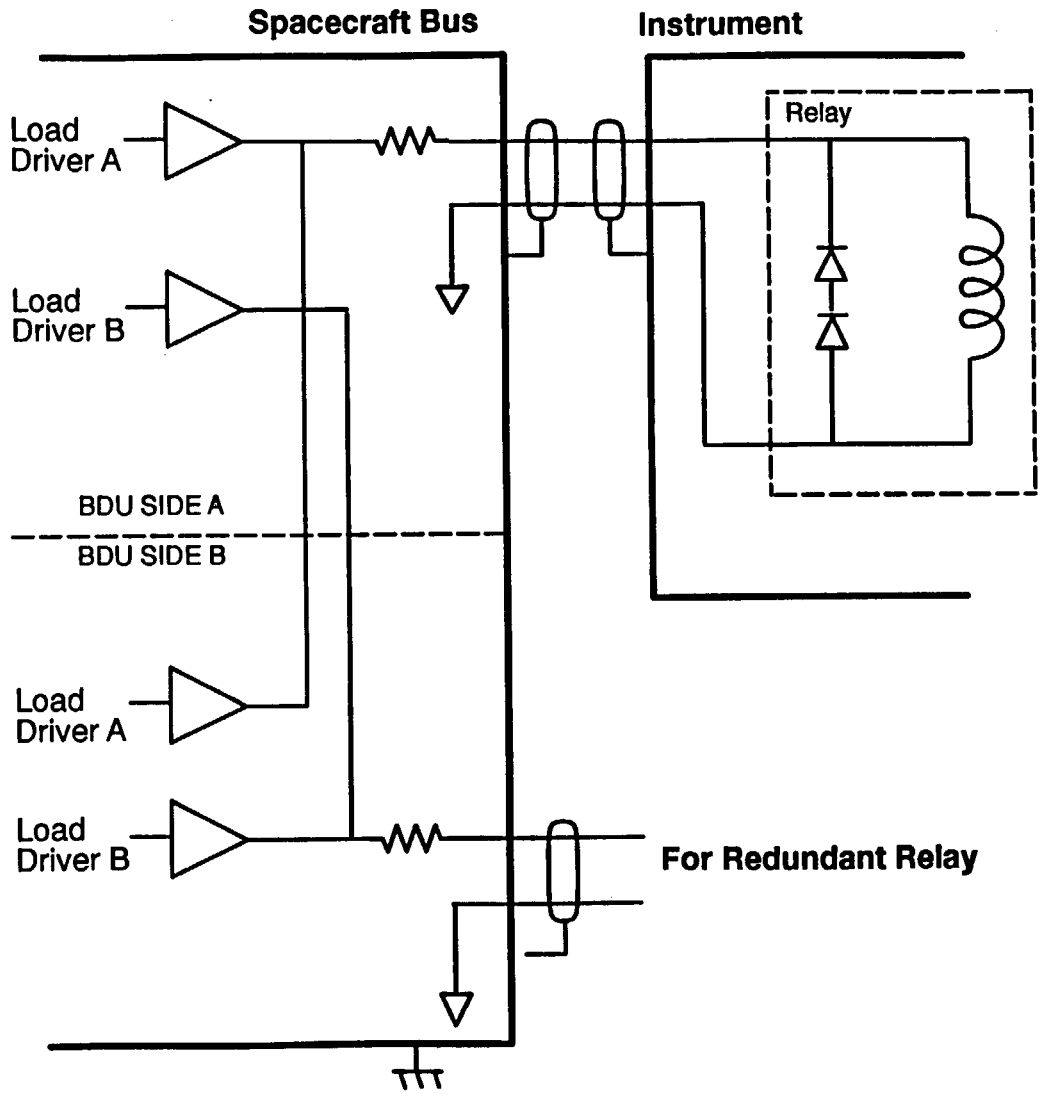

Figure 9. BDU Relay Drive Command Interface Circuit(s) (TBR 6)

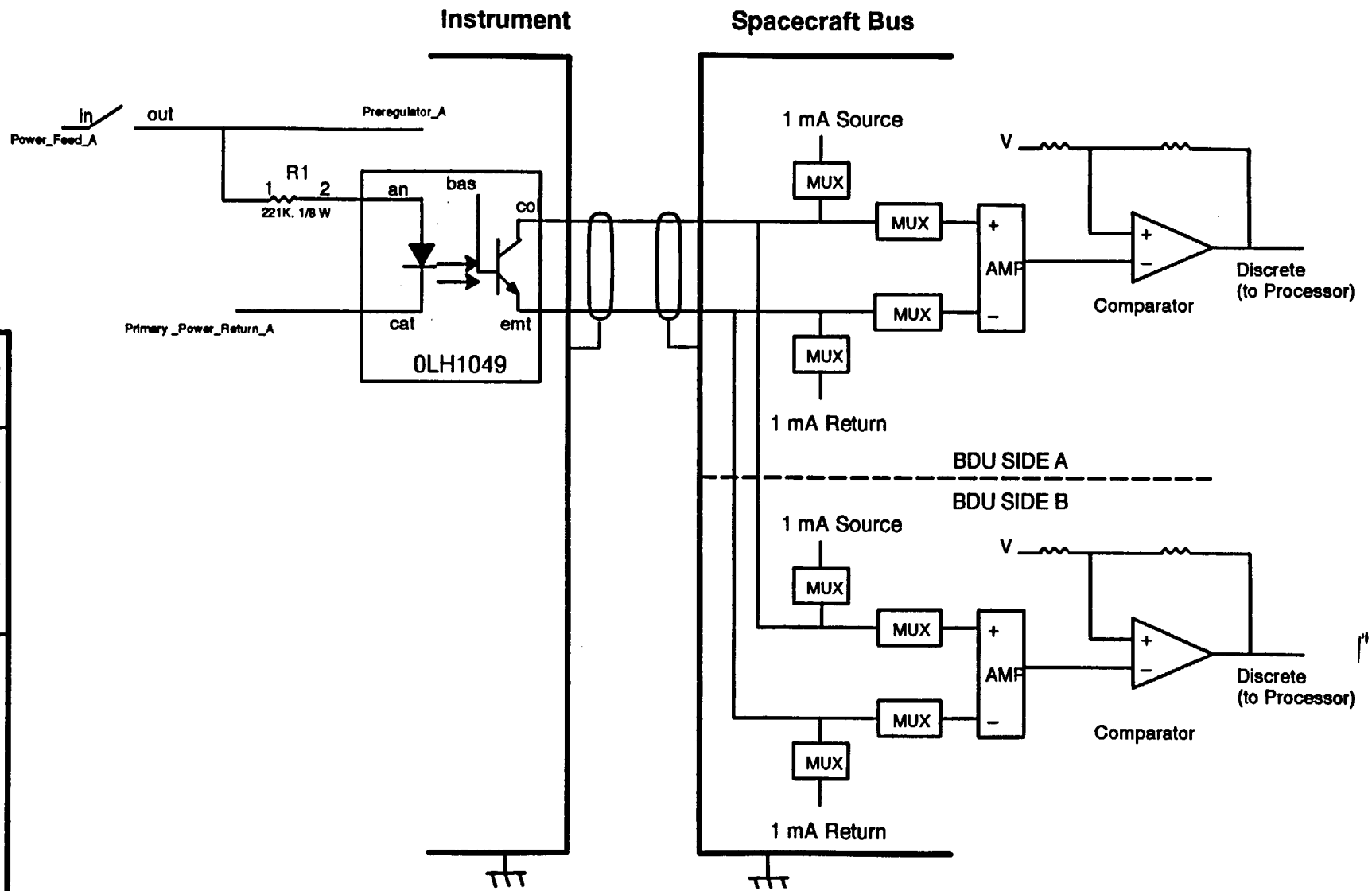

Figure 10. BDU Passive Bi–Level Telemetry Interface Circuit(s) (TBR 7)

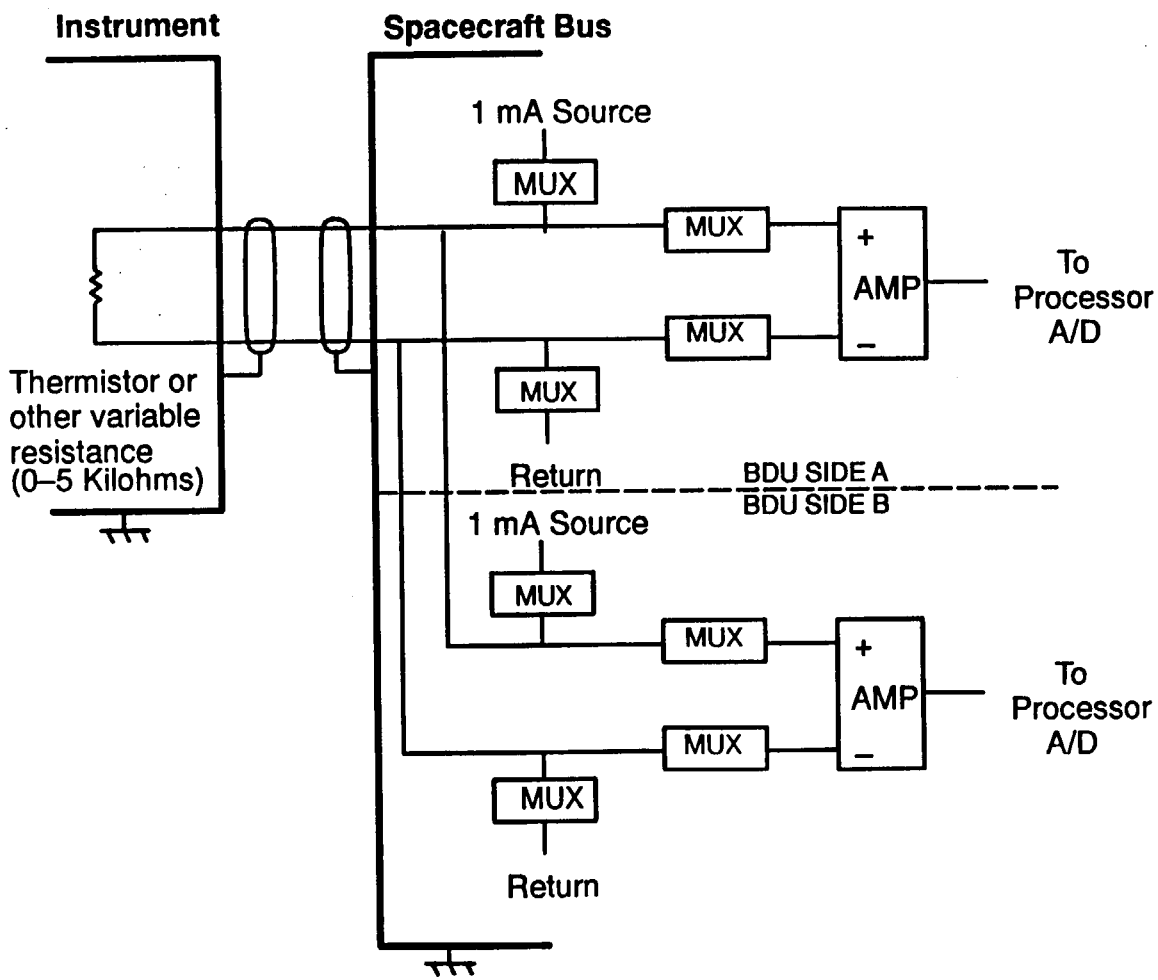

Figure 11. BDU Passive Analog Telemetry Interface Circuit(s) (TBR 8)

(TBD 6)

Figure 12. Command and Telemetry Bus Timing Diagram

(TBD 6)

Figure 13. Time Mark and Frequency Bus Timing Diagram

(TBD 6)

Figure 14. Science Data Timing Diagram

(TBD 6)

Figure 15. BDU Relay Drive Command Timing Diagram(s)

(TBD 6)

Figure 16. BDU Passive Bi–Level Telemetry Timing Diagram(s)

(TBD 6)

Figure 17. BDU Passive Analog Telemetry Timing Diagram(s)

Size	Code Ident No.		
A	49671	20008835	
			Sheet 45

2 POWER

1. The instrument power consumption profile (by mode) is shown in Figures 18 through 23.

2. Turn–on, turn–off, and significant mode switching transients are shown in Figures 24 through 26.

3. Each power feed side is fused as shown in Figure 5. Test points for fuse verification are located on pin **#(TBD 7)**, connector **#(TBD 7)** of the power distribution box.

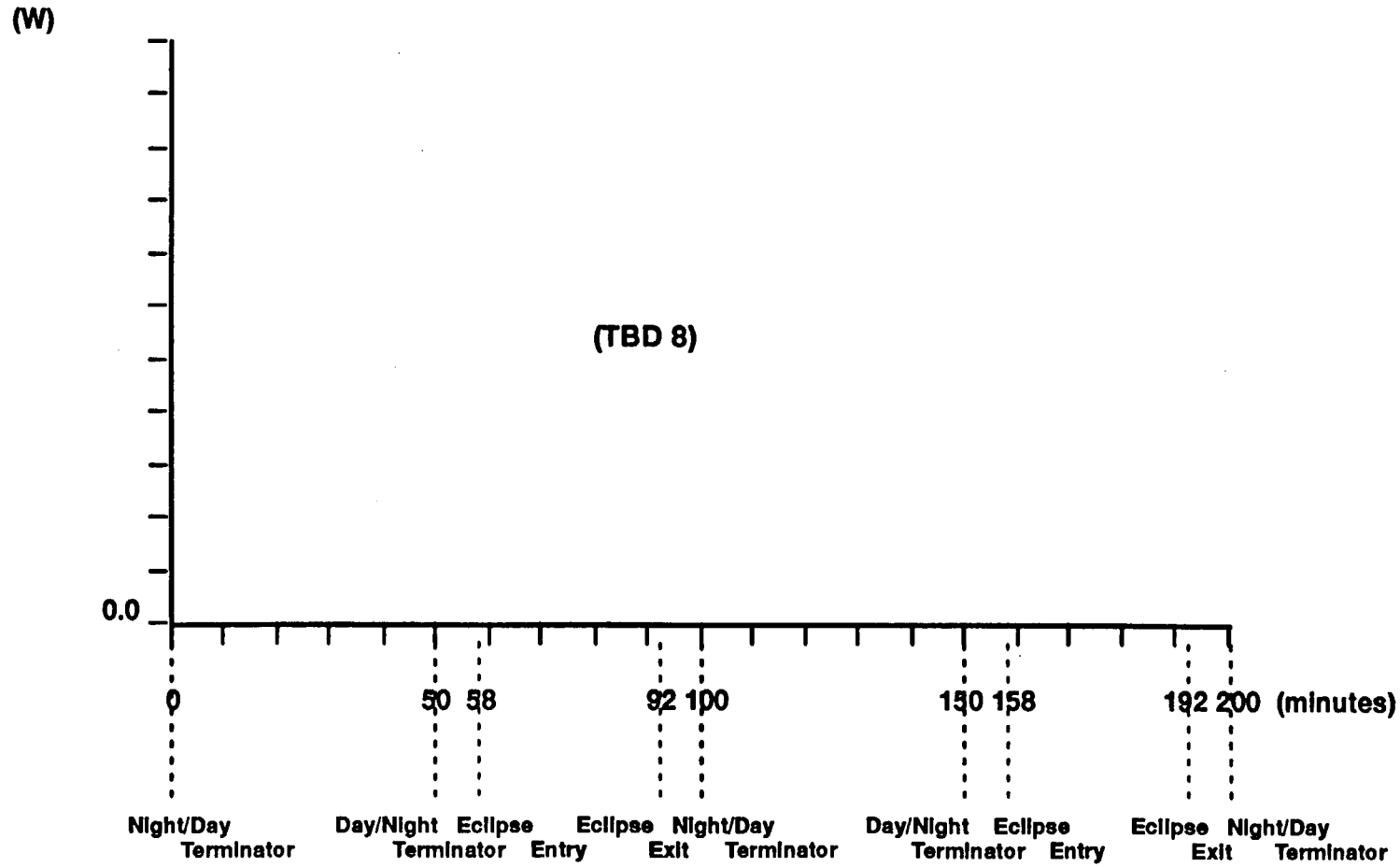

Figure 18. Power Consumption Profile – Safe Mode

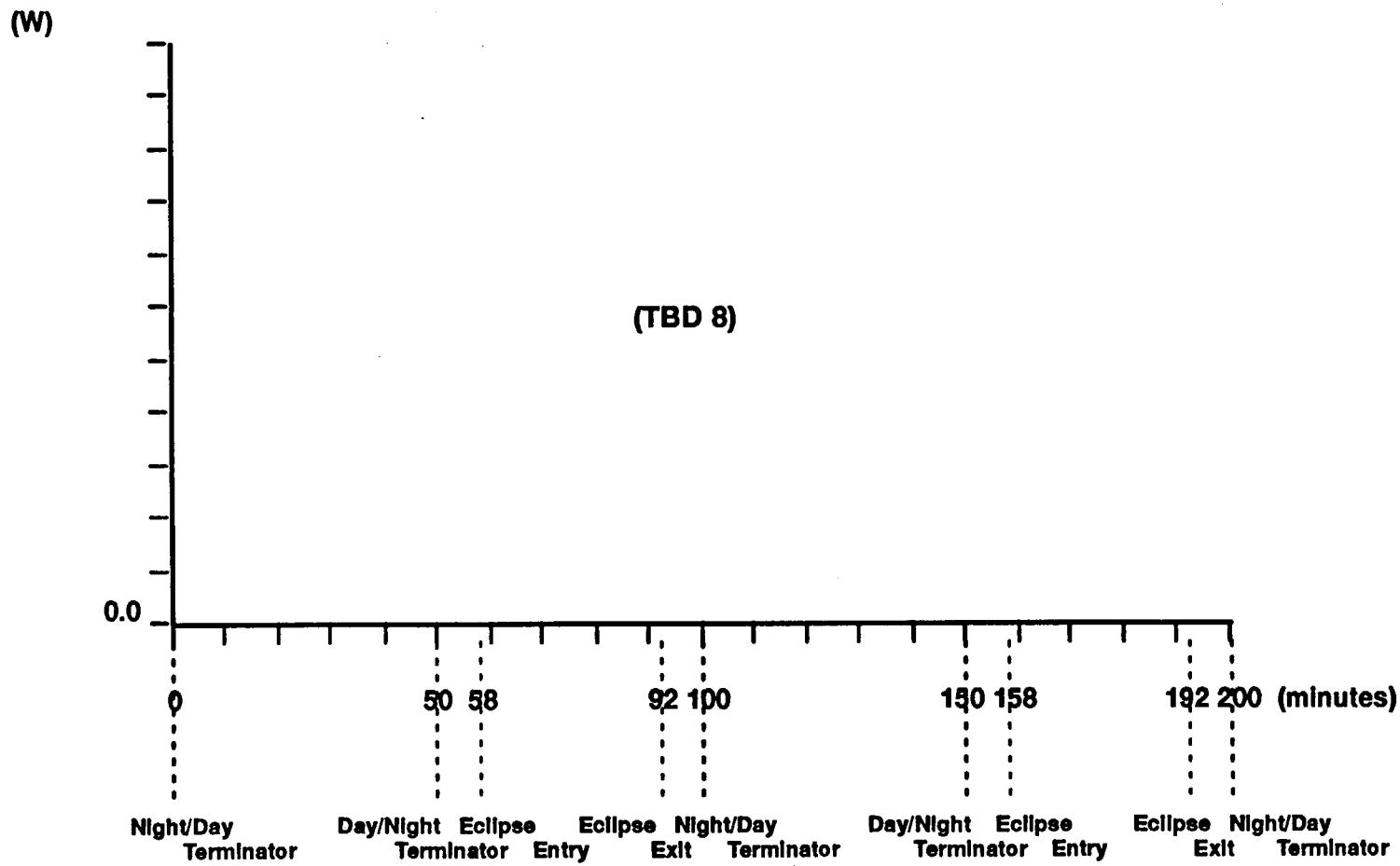

Notes:

Figure 19. Power Consumption Profile – Survival Mode

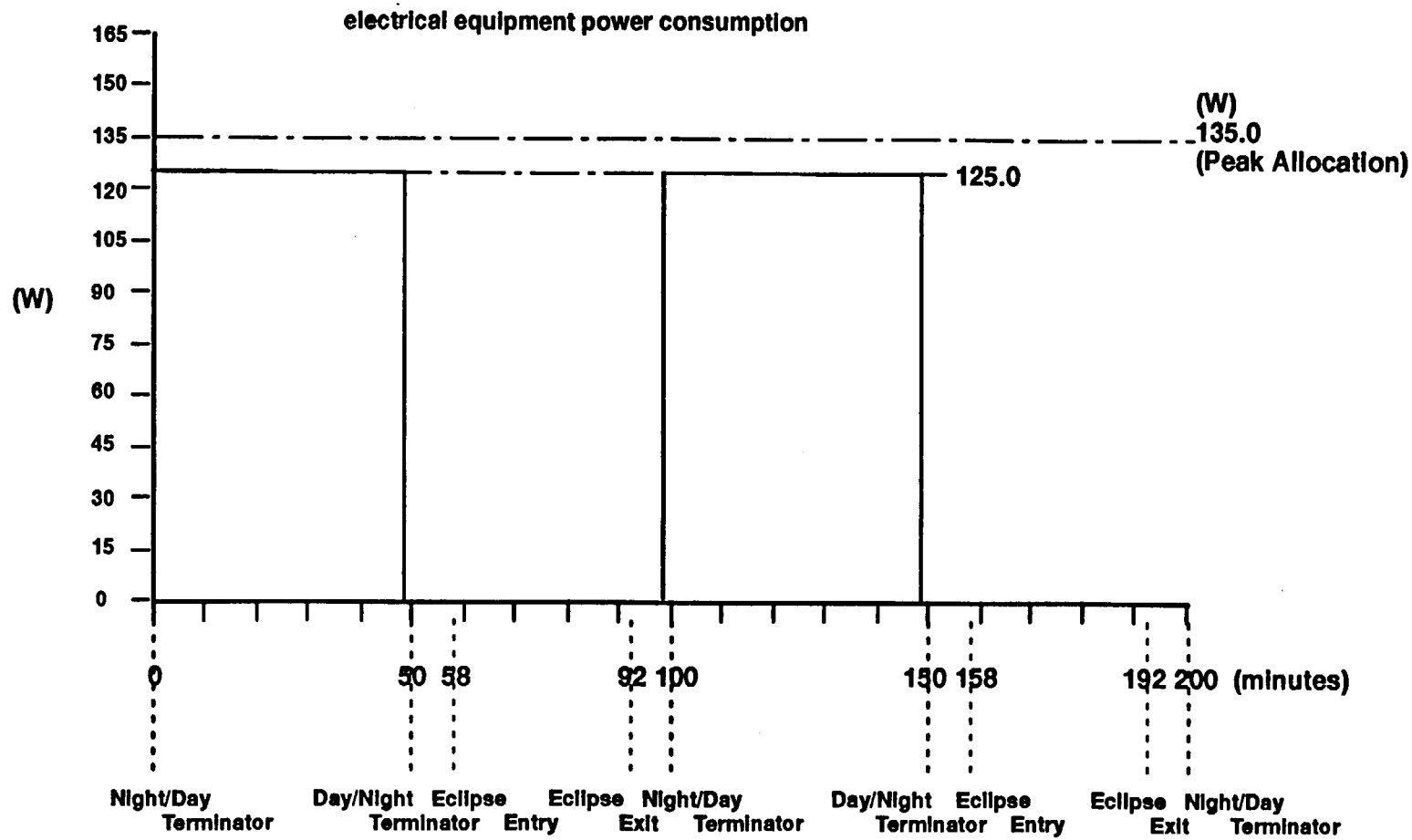

Notes:

1. Electrical heater power consumption is **(TBD 9)** for local & global modes

Figure 20. Power Consumption Profile – Local & Global Modes

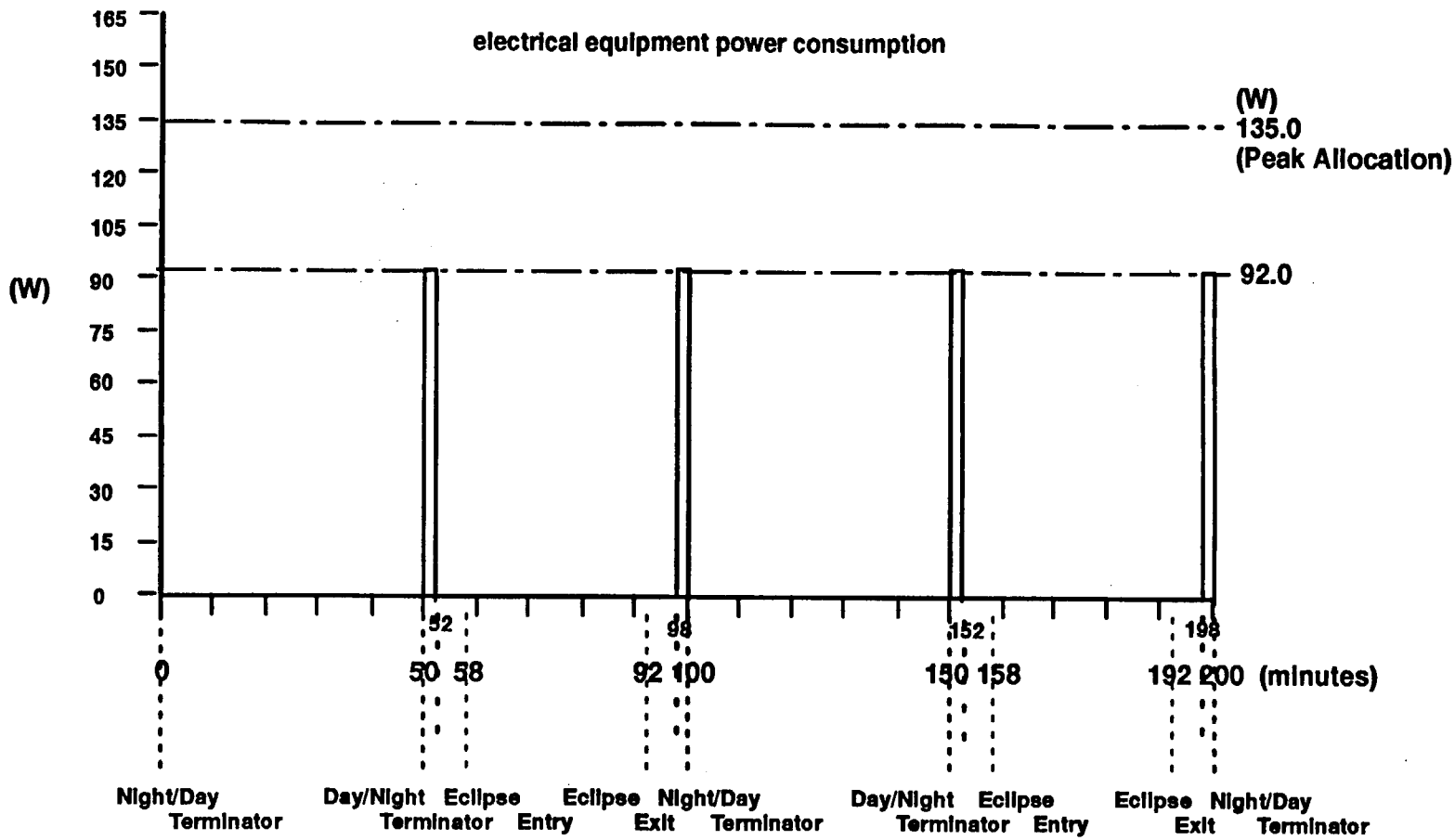

Notes:

1. Calibration twice per day for first two weeks, once per day for next two weeks, once per month thereafter
2. Electrical heater power dissipation is **(TBD 9)** for calibration mode.

Figure 21. Power Consumption Profile – Calibration Mode

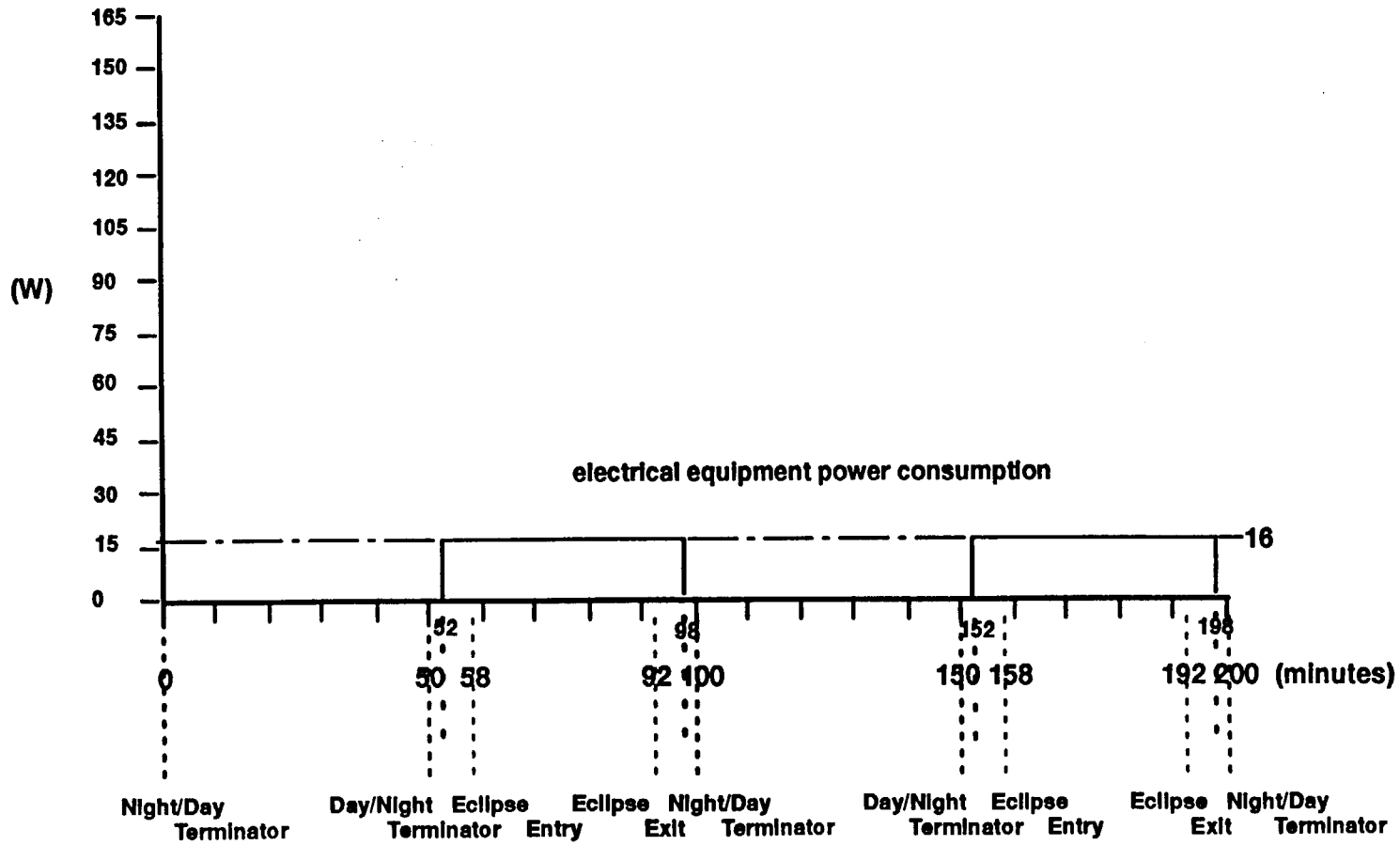

Notes:

1. Electrical heater power is **(TBD 9)** for dark mode.

Figure 22. Power Consumption Profile – Dark Mode

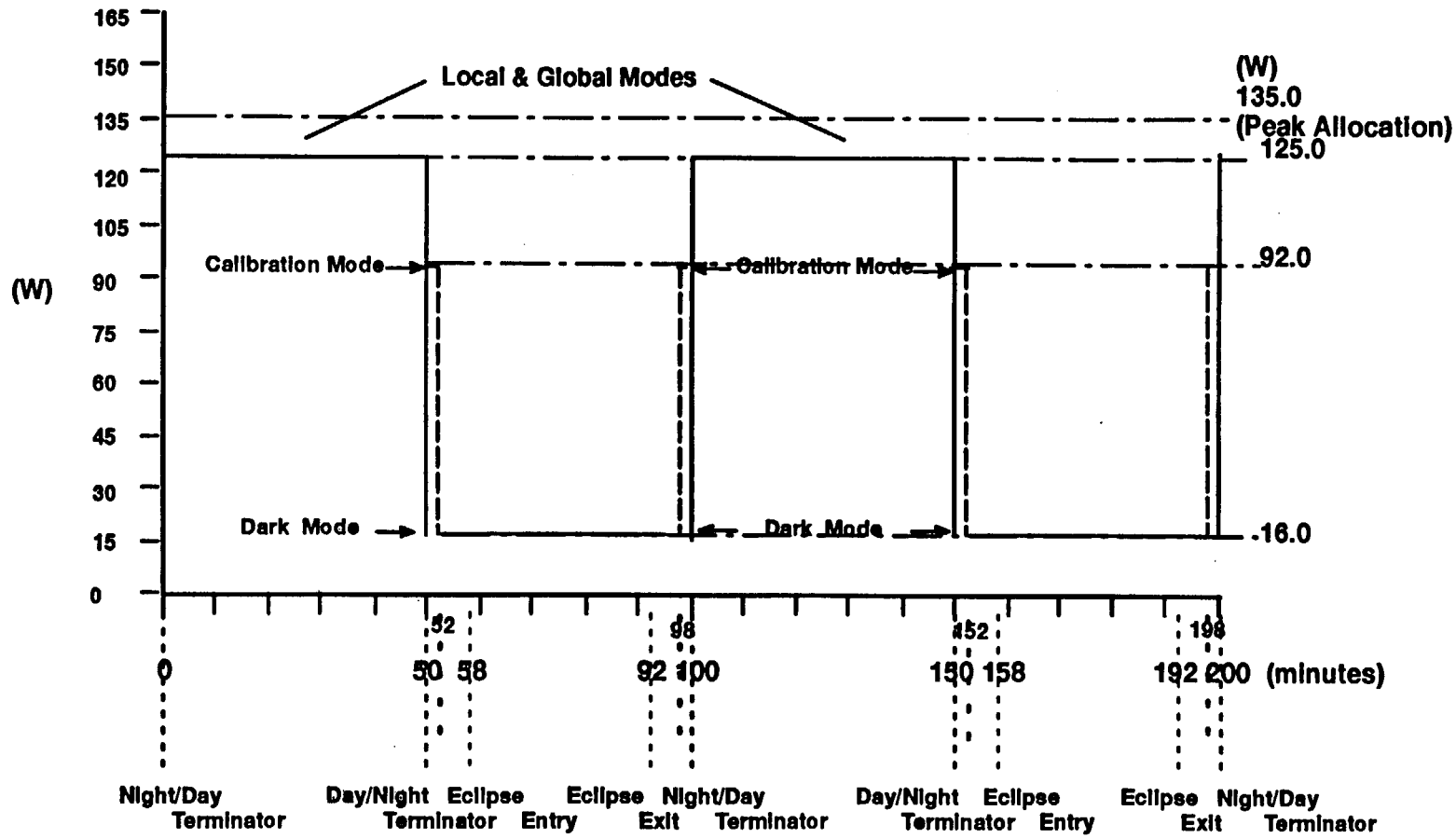

Figure 23. Power Consumption Profile – Operational Orbit Profile

(TBD 10)

Figure 24. Turn–On Transient

(TBD 10)

Figure 25. Turn–Off Transient

(TBD 10)

Figure 26. Mode Switch Transient

3 ELECTROMAGNETIC COMPATIBILITY

1. The instrument conducted and radiated emissions sources are shown in Table IV.

2. The instrument conducted and radiated susceptibilities are shown in Table V.

3. The instrument magnetic properties are shown in Table VI.

4. The instrument magnetic susceptibilities are shown in Table VII.

5. The results of the instrument conducted and radiated emissions tests are shown in Figures 27 through 29.

6. The results of the instrument conducted and radiated susceptibility tests are shown in Figures 31 through 35.

7. The results of the instrument magnetic properties tests are shown in Figure 36.

Table IV. Emissions (TBD 11)

Source	Location	Frequency (Hz)	Emission Range

Table V. Susceptibility (TBD 11)

Item	Location	Frequency (Hz)	Susceptibility Range

Table VI. Magnetic Properties (TBD 11)

Magnetic Fields		Dipole Moment (Am^2)
Intensity (μT)	Direction	

Table VII. Magnetic Susceptibility (TBD 11)

Item	Susceptibility

Notes:

A Ampere
Hz Hertz
m Meter
T Tesla

(TBD 12)

Figure 27. Conducted Emissions Test Data – Power Leads (CE01)

(TBD 12)

Figure 28. Conducted Emissions Test Data – Power Leads (CE03)

(TBD 12)

Figure 29. Radiated Emissions Test Data – Electric Field (RE02)

(TBD 12)

Figure 30. Radiated Emissions Test Data – Magnetic Field (RE04)

(TBD 12)

Figure 31. Conducted Susceptibility Test Data – Power Leads (CS01)

(TBD 12)

Figure 32. Conducted Susceptibility Test Data – Power Leads (CS02)

(TBD 12)

Figure 33. Conducted Susceptibility Test Data – Power Leads (CS06)

(TBD 12)

Figure 34. Radiated Susceptibility Test Data – Magnetic Field (RS01)

(TBD 12)

Figure 36. Magnetic Properties Test Data

Table VIII. Reference Documents*

Document Number	Date	Document Title	Source

* Table information will be filled in as required.

Next Assembly	Used on
20008830	EOS–AM

First Application
EOS–AM

Revisions		Rev Draft 001	
Ltr	Description	Date	Approved
001	Draft	08–04–93	

Revision Record Continued on Sheet _____

Contract No.	NAS5–32500
Written	B. Wilson
Date	
Approved	F. Komro
Date	
Approved	
Date	
Issued	G. Rauscher
Date	

MARTIN MARIETTA

POST OFFICE BOX 800
PRINCETON, NEW JERSEY 08543–0800
TELEPHONE (609) 490–3400

Interface Control Drawing, Command and Telemetry, Earth Observing System AM Spacecraft to Multi–angle Imaging SpectroRadiometer

Size	Code Ident No.	
A	49671	20008837

Approval Signatures

**IN ADDITION TO ECN AND CCB APPROVALS,
ALL CHANGES ON THIS DRAWING SHALL HAVE THE APPROVAL AND THE FULL AGREEMENT OF THE PARTIES LISTED BELOW.**

REV	Spacecraft Program Office	Date	Instrument Program Office	Date	Principal Investigator	Date
	(Signature on file) M. Kavka	8/24/93	T. Reilly		D. Diner	

Size	Code Ident No.	
A	49671	20008837
		Sheet 2

Table of Contents

Section	Title	Sheet
	Approval Signatures	2
1	introduction	9
1.1	Purpose	9
1.2	Scope	9
1.3	Organization	9
2	reference documents	11
3	instrument description	12
3.1	General Description	12
3.2	Functional Description	12
4	modes	14
4.1	Launch Mode	14
4.2	Survival Mode	14
4.3	Safe Mode	15
4.4	Standby Mode	15
4.5	Science Mode	15
4.5.1	Global Mode	15
4.5.2	Local Mode	15
4.5.3	Calibration Mode	16
4.5.4	Dark Mode	16
4.5.5	Test Mode	16
5	Commands	18
5.1	[Command Function]	20
6	Telemetry	21
6.1	[Telemetry Function]	31
7	microprocessors	33
7.1	Microprocessor Control	33
7.2	Microprocessor Operation	33
7.3	Microprocessor Functional Requirements	33
7.4	Microprocessor Memory Load	33
7.5	Microprocessor Memory Dump	33
7.6	Microprocessor Memory Error Detection	33
8	data formats	34
8.1	Command and Telemetry Bus Messages	34
8.1.1	Command and Telemetry Bus Command Messages	34
8.1.2	Command and Telemetry Bus 1K Telemetry Messages	34
8.1.3	Command and Telemetry Bus 16K Telemetry Messages	34
8.2	Science Data Packets	34
8.2.1	Engineering Packets	34
8.2.2	Science Packets	34
8.3	Test Patterns	34
9	constraints	35
9.1	Testing Constraints	35
9.2	Operational Constraints	35
9.3	Environmental Constraints	35

List of Figures

Figure No.	Title	Sheet
1	MISR Functional Block Diagram	13
2	MISR State Diagram	17
3–1	[Command] Schematic	21
4–1	[Telemetry] Schematic	32

List of Tables

Table No.	Title	Sheet
I	Command List	19
II	Telemetry Acronym Structure	22
III	Telemetry List	23
IV	Science Data Rates	34

TBD LOG

ITEM	SECTION	PAGE	SUBJECT	RESPONSIBLE	DUE
TBD 1	3.2	12	Instrument functional description	G. Francis (JPL)	12–1–93
TBD 2	4.1	14	Launch Mode description (3 places)	G. Francis (JPL)	CDR +3 mo
TBD 3	4.1	14	Launch Mode telemetry definition	G. Francis (JPL)	inst test –3 mo
TBD 4	4.2	14	Survival Mode description (2 places)	G. Francis (JPL)	CDR +3 mo
TBD 5	4.2	14	Survival Mode telemetry definition	G. Francis (JPL)	inst test –3 mo
TBD 6	4.3	15	Safe Mode description (2 places)	G. Francis (JPL)	CDR +3 mo
TBD 7	4.3	15	Safe Mode description (3 places)	G. Francis (JPL)	CDR +3 mo
TBD 8	4.3	15	Safe Mode telemetry definition	G. Francis (JPL)	inst test –3 mo
TBD 9	4.4	15	Standby Mode description (3 places)	G. Francis (JPL)	CDR +3 mo
TBD 10	4.4	15	Standby Mode telemetry definition	G. Francis (JPL)	inst test –3 mo
TBD 11	4.5	15	Science Mode description (2 places)	G. Francis (JPL)	CDR +3 mo
TBD 12	4.5	15	Science Mode telemetry definition	G. Francis (JPL)	inst test –3 mo
TBD 13	4.5.1	15	Global Mode telemetry definition	G. Francis (JPL)	inst test –3 mo
TBD 14	4.5.2	15	Local Mode description (2 places)	G. Francis (JPL)	CDR +3 mo
TBD 15	4.5.2	15	Local Mode telemetry definition	G. Francis (JPL)	inst test –3 mo
TBD 16	4.5.3	16	Calibration Mode description (3 places)	G. Francis (JPL)	CDR +3 mo
TBD 17	4.5.3	16	Calibration Mode telemetry definition	G. Francis (JPL)	inst test –3 mo
TBD 18	4.5.4	16	Dark Mode description	G. Francis (JPL)	CDR +3 mo
TBD 19	4.5.4	16	Dark Mode telemetry definition	G. Francis (JPL)	inst test –3 mo
TBD 20	4.5.5	16	Test Mode description	G. Francis (JPL)	CDR +3 mo
TBD 21	4.5.5	16	Test Mode telemetry definition	G. Francis (JPL)	inst test –3 mo

TBD LOG cont'd

ITEM	SECTION	PAGE	SUBJECT	RESPONSIBLE	DUE
TBD 22	Table I	19	Command list	G. Francis (JPL)	CDR +3 mo
TBD 23	5.1 Figure 3–1	20 21	Command function description (3 places)	G. Francis (JPL)	inst test –3 mo
TBD 24	Figure 3–1	21	Command Schematic	G. Francis (JPL)	inst test –3 mo
TBD 25	Table III	23 to 30	Telemetry list (8 places)	G. Francis (JPL)	CDR +3 mo
TBD 26	6.1 Figure 4–1	31 32	Telemetry function description (3 places)	G. Francis (JPL)	inst test –3 mo
TBD 27	Figure 4–1	32	Telemetry schematic	G. Francis (JPL)	inst test –3 mo
TBD 28	7, 7.1 to 7.6	33	Microprocessor description (6 places)	G. Francis (JPL)	CDR +3 mo
TBD 29	8 8.1 8.1.1 to 8.1.3 8.2 8.2.1 to 8.2.2 8.3	34	Data formats (9 places)	G. Francis (JPL)	CDR +3 mo
TBD 30	9 9.1 9.2 9.3	35	Constraints (4 places)	G. Francis (JPL)	CDR +3 mo

TBR LOG

ITEM	SECTION	PAGE	SUBJECT	RESPONSIBLE	DUE
none					

Size	Code Ident No.	
A	49671	20008837
		Sheet 8

1 INTRODUCTION

1.1 Purpose

The Command and Telemetry Interface Control Drawing (C&T ICD), 20008837, when executed, represents an agreement of the detailed implementation of the command and telemetry interfaces of the Multi–angle Imaging Spectroradiometer (MISR) with the Earth Observing System (EOS) AM Spacecraft. This drawing, together with the Mechanical Interface Control Drawing (MICD) Drawing, 20008831, MICD Tables, 20008832, Thermal Interface Control Drawing (TICD), 20008833, Electrical Interface Control Drawing (EICD) Schematic, 20008834, EICD Tables, 20008835, and Integration and Test Interface Control Drawing (I&T ICD), 20008836, describe the details of the interfaces between the EOS–AM Spacecraft and MISR. The top–level instrument Interface Control Drawing (ICD), 20008830, provides the instrument ICD tree and revision status for all sub–tier instrument ICDs.

The C&T ICD describes the operating characteristics of the MISR. Its purpose is to provide to the integration and test (I&T) personnel an understanding of how the MISR is operated and how its operation and performance are monitored.

1.2 Scope

This C&T ICD is limited to the description of operation of the MISR necessary to execute the I&T and launch activities of the EOS–AM program and, as such, concentrates on commands and telemetry via the Bus Data Unit (BDU) and Command and Telemetry (C&T) bus, descriptions of modes to be tested, and instrument operating constraints during test. Science and engineering data descriptions are limited to that of format and content since they are processed during test by the Instrument Ground Support Equipment (IGSE). The material contained herein is not intended to define on–orbit operational requirements.

1.3 Organization

Section 1 provides a brief description of the document's purpose followed by a statement of its scope and concluding with a description of its organization.

Section 2 provides a list of the documents referenced in the text and the source of each such document.

Section 3 provides a description of the instrument, focusing on its operation but also describing its features.

Section 4 contains detailed descriptions of all instrument modes, including operating, test, calibration, and contingency modes.

Section 5 provides a description of each command, including its purpose, its effects, how it can be verified, prerequisite telemetry state, and other associated commands.

Section 6 describes all telemetry associated with the instrument, including health and safety telemetry sampled via the Bus Data Unit (BDU) and housekeeping telemetry sampled via the C&T bus. The content of the engineering data embedded in the science data stream is provided, but the telemetry is not described.

Section 7 describes the use of microprocessors.

Section NO TAG describes the data format.

Section 9 describes all constraints associated with operating and testing the instrument.

2 REFERENCE DOCUMENTS

The following documents provide additional information relative to the functioning of the MISR command and data handling subsystem. The information contained in these documents is deemed to be supplemental in nature and hence is not included herein.

Reference documents will be provided as required.

3 INSTRUMENT DESCRIPTION

3.1 General Description

MISR is a passive imaging spectroradiometer which uses nine separate charge coupled device (CCD)–based pushbroom cameras to observe the Earth at nine discrete view angles: One at nadir, plus four other symmetrical fore–aft views up to ±70.5° forward and aftward of nadir. Images at each angle will be obtained in four spectral bands centered at 0.433, 0.555, 0.67, and 0.865 μm. Each of the 36 instrument data channels (i.e., four spectral bands for each of the nine cameras) is individually commandable to provide ground sampling of 240 m, 480 m, 960 m, or 1.92 km. The swath width of the MISR imaging data is 356 km, providing multi–angle coverage of the entire Earth in 9 days at the equator and 2 days at the poles. After on–orbit activation, it is anticipated to operate the MISR continuously, taking science data on the day side and transitioning to a dark mode (no science data) on the dark side, unless dictated otherwise by unfavorable circumstances.

The MISR has two separate on–board calibration panels: one for the forward and nadir looking cameras; one for the aftward and nadir looking cameras. In addition to the camera calibration data the MISR has a goniometer which measures the variance of light over the calibration panels.

3.2 Functional Description

(TBD 1)

The MISR functional block diagram is shown in Figure 1.

Figure 1. MISR Functional Block Diagram

Size	Code Ident No.	20008837
A	49671	
		Sheet 13

4 MODES

The MISR modes define subsystem configurations to perform particular mission functions, which have particular power load and data rate characteristics. The data rate is either the day rate (6.5 Mbps avg.) or the night rate (0 Mbps). The data rate varies on the day side based on the number of cameras in Global Mode or Local Mode. Operational modes do not stipulate whether side A or side B is used in the case of redundant subsystems. The MISR modes are listed below and described in the following sections.

Mode #	Mode Name
0	Launch (OFF)
1	Survival
2	Safe
3	Standby
4	Science (day)
	• Global
	• Local
	• Calibration
	• Dark
	• Test

The MISR state diagram is shown in Figure 2.

4.1 Launch Mode

Launch Mode (Mode #0) is the mode to which the MISR is configured for launch. In Launch Mode the Optics Cover is closed and latched, all subsystems and power supplies are OFF.

Launch Mode is entered from **(TBD 2)** mode via the **(TBD 2)** command. This command sets the **(TBD 2)** macro command to close and latch the doors, enable survival heaters, and turn all subsystems Off. BDU command PREREGS_OFF is required to turn the power supplies off.

Launch Mode is defined by **(TBD 3)** telemetry.

4.2 Survival Mode

Survival Mode (Mode #1) is the mode to which the MISR is configured for survival in the event that spacecraft power consumption must be reduced to minimum. In Survival Mode the power supplies are Off and survival heaters are enabled.

Survival Mode is entered from any mode via **(TBD 4)** command. This command sets the **(TBD 4)** macro command to close the cover, stow all mechanisms, and turn all subsystems OFF. BDU command PREREGS_OFF is required to turn the power supplies off.

Survival Mode is defined by **(TBD 5)** telemetry.

4.3 Safe Mode

Safe Mode (Mode #2) is the mode to which the MISR is configured when the instrument can no longer be guaranteed a stable and safe attitude. In Safe Mode the power supplies are **(TBD 6)** and all subsystems are **(TBD 6)**.

Safe Mode is entered from any mode via **(TBD 7)** command. This command sets the **(TBD 7)** macro command to configure the instrument to Safe Mode. The **(TBD 7)** macro command is also entered autonomously from any mode in the absence of the SCC OK indication for 5 major cycles on the Command and Telemetry Bus.

Safe Mode is defined by **(TBD 8)** telemetry.

4.4 Standby Mode

Standby Mode (Mode #3) is the mode to which the MISR is configured to establish and maintain instrument thermal stability prior to transition to Science Modes from OFF. MISR can also transition to Survival or Safe Mode from Standby.

Standby Mode is entered via **(TBD 9)** command. This command sets the **(TBD 9)** macro command to **(TBD 9)**.

Standby Mode is defined by **(TBD 10)** telemetry.

4.5 Science Mode

Science Mode (Mode #4) is the mode to which the MISR is configured for all science, calibration, and test data collection. All camera bands are ON.

Science Mode is entered from Standby Mode via **(TBD 11)** command. This command sets the **(TBD 11)** macro command to turn on all the bands.

Science Mode is defined by **(TBD 12)** telemetry.

4.5.1 Global Mode

Global Mode is the mode in which constant averaging is held in each detector array. Global Mode is the default science mode for science data collection.

Global Mode is defined by **(TBD 13)** telemetry.

4.5.2 Local Mode

Local Mode is the mode in which each camera views a target at a high resolution as it passes over that target.

Local Mode is entered from Global Mode via **(TBD 14)** command. This command sets the **(TBD 14)** macro command to configure the MISR to toggle highest resolution through each camera as a target is aquired.

Local Mode is defined by **(TBD 15)** telemetry.

4.5.3 Calibration Mode

Calibration Mode is the mode to which the MISR is configured to calibrate the instrument cameras. Most subsystems are ON in this mode. The cameras are the exception in which only the four aft plus the nadir, or four forward plus the nadir cameras are ON depending on which set is being calibrated. The remaining four cameras not being calibrated are OFF.

Calibration Mode is entered from Dark Mode via **(TBD 16)** command. This command sets the **(TBD 16)** macro command to **(TBD 16)**.

Calibration Mode is defined by **(TBD 17)** telemetry.

4.5.4 Dark Mode

Dark Mode is the mode to which the MISR is configured to when the spacecraft is in orbit eclipse. All subsystems are ON except the cameras which are OFF.

Dark Mode is entered from Global Mode via **(TBD 18)** command.

Dark Mode is defined by **(TBD 19)** telemetry.

4.5.5 Test Mode

Test Mode is the mode to which the MISR is configured to when a test of the high rate science data link is desired. All subsystems are ON. The MISR generates a fixed test pattern until commanded to cease output and transistion to another mode.

Test Mode is entered from Global Mode via **(TBD 20)** command. This command sets the **(TBD 20)** macro command to **(TBD 20)**.

Test Mode is defined by **(TBD 21)** telemetry.

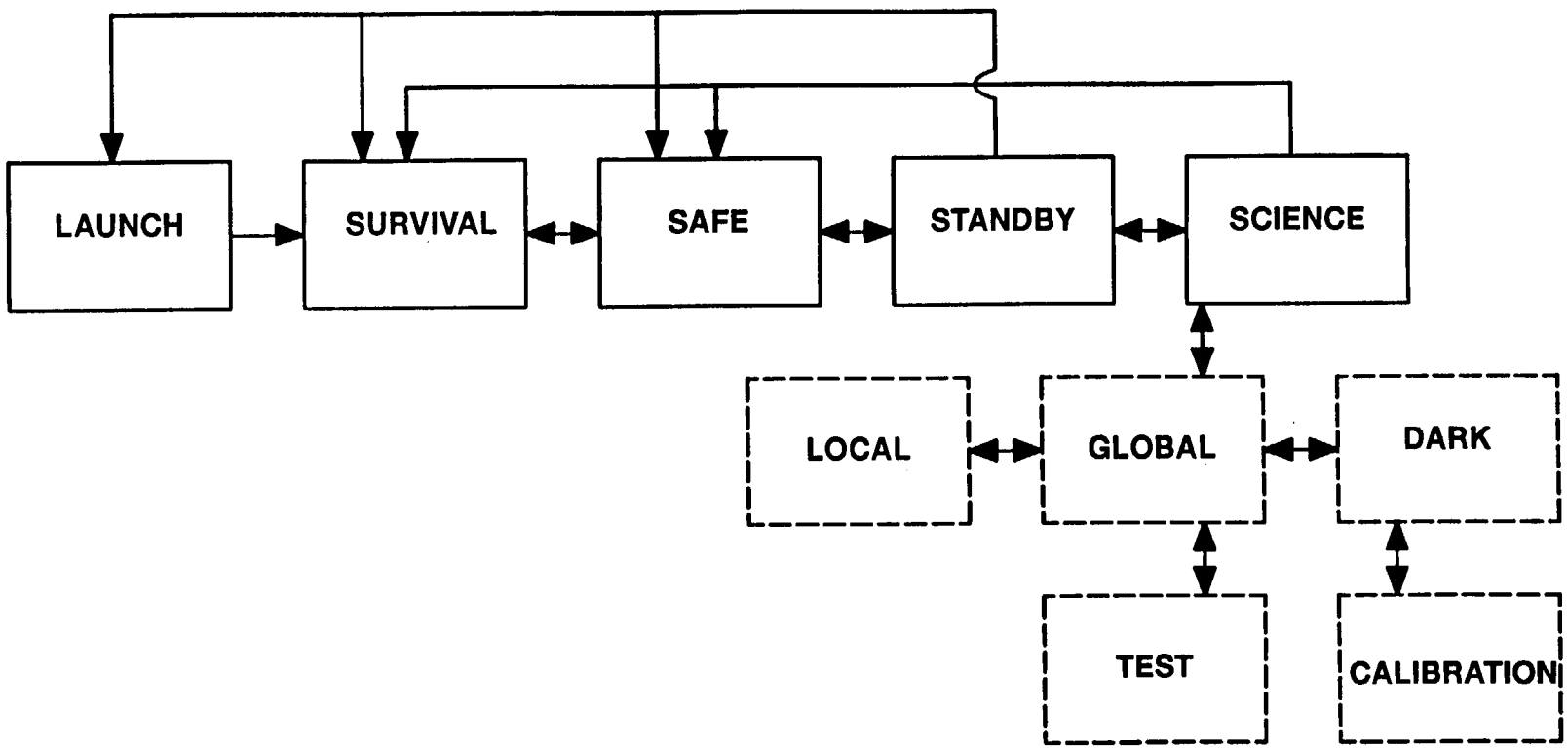

Figure 2. MISR State Diagram

Size A
Code Ident No. 49671
20008837
Sheet 17

5 COMMANDS

The MISR commands are listed in Table I and discussed in the following sections.

Table I. Command List (TBD 22)

ID #	Acronym (Note 3)	Command		Type (Note 4)	RT	SA	Format (Note 5)		Prereq ID #	Reference Section
		S/S	Description				Data 1	Data 2		
1			Cover Control							
2			Cover / Goniometer Latch Control							
3			Calibration Panel Control							
4			Calibration Panel North Latch Control							
5			Calibration Panel South Latch Control							
6			Camera Control							
7			CPU Control							
8			Diodes Control							
9			Goniometer Control							
10			Memory Dump							
11			Memory Load							
12			Parameter Update							
13			Mode Control							
14			Preregulator A Select	SR						
15			Preregulator A ON	SR						
16			Preregulator B Select	SR						
17			Preregulator B ON	SR						
18			Preregulators OFF	SR						
19			Survival Heaters A ON	SR						
20			Survival Heaters B ON	SR						
21			Survival Heaters OFF	SR						
22			Go to Safe Mode							

Notes:

RT Remote terminal
SA Subaddress
S/S Subsystem
1. No entry indicates non–applicable or a "don't care" choice.
2. Table count is 22 commands.
3. Acronym is 16 character short mnemonic, single command action/noun. This will eventually be supplanted by two separate OASIS action/noun fields.
4. Type: L = logic level, SR = S/C relay, and R = relay. All are via 1553 bus except S/C relay.
5. Most significant bit is first bit transmitted and is leftmost bit shown.

5.1 (TBD 23) [Command Function]

The **(TBD 23)**[command] schematic is shown in Figure 3–1.

(TBD 24)

Figure 3–1. (TBD 23) [Command] Schematic

Size	Code Ident No.		
A	49671	20008837	
			Sheet 21

6 TELEMETRY

The MISR telemetry is listed in Table III and discussed in the following sections.

Two OASIS 16 character fields are used to define the telemetry acronyms per the mnemonic conventions defined in the "EOS–AM Database and Test Procedure Practices, Standards and Conventions." The first three characters of the external element field denote the EOS subsystem with the remaining 13 characters reserved. "MIS" are the three characters that denote MISR. The second OASIS 16 character field defines the item name as indicated in Table II. This item name structure is used in the following telemetry tables.

Table II. Telemetry Acronym Structure

- 16 Characters: TT_NNNNNNNNNNNNN
- Type(2 characters),_(1 character),Name(13 characters)
- Type (TT)
  - 1st T is sample type:
    - I – Current
    - V– Voltage
    - T– Temperature
    - B– Bi–level Status
    - P– Power
    - C– Configuration Information
    - S– Status Information
    - D– Memory or Dump Data
  - 2nd T is source:
    - A– Active Analog
    - D– Pseudo or Derived Data
    - R– Real or Raw Data
    - S– Flight Software Generated Data
    - P– Passive Analog

N's are limited to alphanumeric characters and the underscore.

Table III. Telemetry List (TBD 25)

Acronym (Note 1)	Telemetry Point		Type (Note 4)	RT	SA	Major Frame		Minor Frame		T_{0Mf} ΔT	Reference Section
	S/S	Description				1st Mfid	# mfs	1st Bit	# Bits		
		Bias Voltage, HQED1	A								
		Bias Voltage, HQED2	A								
		Bias Voltage, HQED3	A								
		Bias Voltage, HQED4	A								
		Current, NCalP, MDDA1	A								
		Current, NCalP, MDDA2	A								
		Current, SCalP, MDDA1	A								
		Current, SCalP, MDDA2	A								
		Current, Camera Aa PS	A								
		Current, Camera Af PS	A								
		Current, Camera An PS	A								
		Current, Camera Ba PS	A								
		Current, Camera Bf PS	A								
		Current, Camera Ca PS	A								

Notes:

1st bit	1st bit transmitted, most significant bit, leftmost bit
Mf	Major frame
mf	Minor frame
Mfid	Major frame identifier
mfid	Minor frame identifier
RT	Remote terminal
SA	Subaddress
S/S	Subsystem
T_{0Mf} ΔT	Delta time from major frame start (T_0)

1. No entry indicates non–applicable or a "don't care" choice.
2. Table count is 113 signals.
3. Acronym is 2nd 16–character field of OASIS Description. First 16–character field (not shown) contains External Element, which for MISR is "MIS_." Leading 2 characters define functional signal: CD = configuration derived, CR = configuration raw, IR = current raw, TA = temperature active, TP = temperature passive, and VR = voltage raw per Type/Source codes. Since T indicates temperature, temperature is not part of Description structure. Also see Table II.
4. Type: A = active analog, B = passive bi–level, D = digital value, P = passive analog, SB = S/C passive bi–level and SP = S/C passive analog.

Table III. Telemetry List (cont'd) (TBD 25)

Acronym (Note 1)	Telemetry Point		Type (Note 4)	RT	SA	Major Frame		Minor Frame		T_{0Mf} ΔT	Reference Section
	S/S	Description				1st Mfid	# mfs	1st Bit	# Bits		
		Current, Camera Da PS	A								
		Current, Camera Df PS	A								
		Current, DC/DC1	A								
		Current, DC/DC2	A								
		Current, Goniometer Motor	A								
		Temp, CCD Aa	P								
		Temp, CCD Af	P								
		Temp, CCD An	P								
		Temp, CCD Ba	P								
		Temp, CCD Bf	P								
		Temp, CCD Ca	P								
		Temp, CCD Cf	P								
		Temp, CCD Da	P								
		Temp, CCD Df	P								

Notes:

1st bit	1st bit transmitted, most significant bit, leftmost bit
Mf	Major frame
mf	Minor frame
Mfid	Major frame identifier
mfid	Minor frame identifier
RT	Remote terminal
SA	Subaddress
S/S	Subsystem
T_{0Mf} ΔT	Delta time from major frame start (T_0)

1. No entry indicates non–applicable or a "don't care" choice.
2. Table count is 113 signals.
3. Acronym is 2nd 16–character field of OASIS Description. First 16–character field (not shown) contains External Element, which for MISR is "MIS_." Leading 2 characters define functional signal: CD = configuration derived, CR = configuration raw, IR = current raw, TA = temperature active, TP = temperature passive, and VR = voltage raw per Type/Source codes. Since T indicates temperature, temperature is not part of Description structure. Also see Table II.
4. Type: A = active analog, B = passive bi–level, D = digital value, P = passive analog, SB = S/C passive bi–level and SP = S/C passive analog.

Table III. Telemetry List (cont'd) (TBD 25)

Acronym (Note 1)	Telemetry Point		Type (Note 4)	RT	SA	Major Frame		Minor Frame		T_{0Mf} ΔT	Reference Section
	S/S	Description				1st Mfid	# mfs	1st Bit	# Bits		
		Temp, CSE Chassis Aa	P								
		Temp, CSE Chassis Af	P								
		Temp, CSE Chassis An	P								
		Temp, CSE Chassis Ba	P								
		Temp, CSE Chassis Bf	P								
		Temp, CSE Chassis Ca	P								
		Temp, CSE Chassis Cf	P								
		Temp, CSE Chassis Da	P								
		Temp, CSE Chassis Df	P								
		Temp, Spectralon 1	P								
		Temp, Spectralon 2	P								
		Temp, Optical Bench, Aft	P								
		Temp, Optical Bench, Fwd	P								
		Temp, Optical Bench, Mid	P								

Notes:

1st bit	1st bit transmitted, most significant bit, leftmost bit
Mf	Major frame
mf	Minor frame
Mfid	Major frame identifier
mfid	Minor frame identifier
RT	Remote terminal
SA	Subaddress
S/S	Subsystem
T_{0Mf} ΔT	Delta time from major frame start (T_0)

1. No entry indicates non–applicable or a "don't care" choice.
2. Table count is 113 signals.
3. Acronym is 2nd 16–character field of OASIS Description. First 16–character field (not shown) contains External Element, which for MISR is "MIS_." Leading 2 characters define functional signal: CD = configuration derived, CR = configuration raw, IR = current raw, TA = temperature active, TP = temperature passive, and VR = voltage raw per Type/Source codes. Since T indicates temperature, temperature is not part of Description structure. Also see Table II.
4. Type: A = active analog, B = passive bi–level, D = digital value, P = passive analog, SB = S/C passive bi–level and SP = S/C passive analog.

Table III. Telemetry List (cont'd) (TBD 25)

Acronym (Note 1)	Telemetry Point		Type (Note 4)	RT	SA	Major Frame		Minor Frame		T_{0Mf} ΔT	Reference Section
	S/S	Description				1st Mfid	# mfs	1st Bit	# Bits		
		Temp, Optics, Front Aa	P								
		Temp, Optics, Front Af	P								
		Temp, Optics, Front An	P								
		Temp, Optics, Front Ba	P								
		Temp, Optics, Front Bf	P								
		Temp, Optics, Front Ca	P								
		Temp, Optics, Front Cf	P								
		Temp, Optics, Front Da	P								
		Temp, Optics, Front Df	P								
		Temp, Optics, Rear Aa	P								
		Temp, Optics, Rear Af	P								
		Temp, Optics, Rear An	P								
		Temp, Optics, Rear Ba	P								
		Temp, Optics, Rear Bf	P								

Notes:

1st bit	1st bit transmitted, most significant bit, leftmost bit
Mf	Major frame
mf	Minor frame
Mfid	Major frame identifier
mfid	Minor frame identifier
RT	Remote terminal
SA	Subaddress
S/S	Subsystem
T_{0Mf} ΔT	Delta time from major frame start (T_0)

1. No entry indicates non–applicable or a "don't care" choice.
2. Table count is 113 signals.
3. Acronym is 2nd 16–character field of OASIS Description. First 16–character field (not shown) contains External Element, which for MISR is "MIS_." Leading 2 characters define functional signal: CD = configuration derived, CR = configuration raw, IR = current raw, TA = temperature active, TP = temperature passive, and VR = voltage raw per Type/Source codes. Since T indicates temperature, temperature is not part of Description structure. Also see Table II.
4. Type: A = active analog, B = passive bi–level, D = digital value, P = passive analog, SB = S/C passive bi–level and SP = S/C passive analog.

Table III. Telemetry List (cont'd) (TBD 25)

Acronym (Note 1)	Telemetry Point		Type (Note 4)	RT	SA	Major Frame		Minor Frame		T_{0Mf} ΔT	Reference Section
	S/S	Description				1st Mfid	# mfs	1st Bit	# Bits		
		Temp, Optics, Rear Ca	P								
		Temp, Optics, Rear Cf	P								
		Temp, Optics, Rear Da	P								
		Temp, Optics, Rear Df	P								
		Temp, PIN 1	P								
		Temp, PIN 2	P								
		Temp, PIN 3	P								
		Temp, PIN 4	P								
		Temp, PIN 5	P								
		Temp, HQED1	P								
		Temp, HQED2	P								
		Temp, HQED3	P								
		Temp, HQED4	P								
		Temp, Radiator, +Z	P								
		Temp, Radiator, –Y	P								

Notes:

1st bit	1st bit transmitted, most significant bit, leftmost bit
Mf	Major frame
mf	Minor frame
Mfid	Major frame identifier
mfid	Minor frame identifier
RT	Remote terminal
SA	Subaddress
S/S	Subsystem
T_{0Mf} ΔT	Delta time from major frame start (T_0)

1. No entry indicates non–applicable or a "don't care" choice.
2. Table count is 113 signals.
3. Acronym is 2nd 16–character field of OASIS Description. First 16–character field (not shown) contains External Element, which for MISR is "MIS_." Leading 2 characters define functional signal: CD = configuration derived, CR = configuration raw, IR = current raw, TA = temperature active, TP = temperature passive, and VR = voltage raw per Type/Source codes. Since T indicates temperature, temperature is not part of Description structure. Also see Table II.
4. Type: A = active analog, B = passive bi–level, D = digital value, P = passive analog, SB = S/C passive bi–level and SP = S/C passive analog.

Table III. Telemetry List (cont'd) (TBD 25)

Acronym (Note 1)	Telemetry Point		Type (Note 4)	RT	SA	Major Frame		Minor Frame		T_{0Mf} ΔT	Reference Section
	S/S	Description				1st Mfid	# mfs	1st Bit	# Bits		
		Temp, Sun Side	P								
		Temp, TEC1, CJT, Aa	P								
		Temp, TEC1, CJT, Af	P								
		Temp, TEC1, CJT, An	P								
		Temp, TEC1, CJT, Ba	P								
		Temp, TEC1, CJT, Bf	P								
		Temp, TEC1, CJT, Ca	P								
		Temp, TEC1, CJT, Cf	P								
		Temp, TEC1, CJT, Da	P								
		Temp, TEC1, CJT, Df	P								
		Temp, TEC2, CJT, Aa	P								
		Temp, TEC2, CJT, Af	P								
		Temp, TEC2, CJT, An	P								
		Temp, TEC2, CJT, Ba	P								
		Temp, TEC2, CJT, Bf	P								

Notes:

1st bit	1st bit transmitted, most significant bit, leftmost bit
Mf	Major frame
mf	Minor frame
Mfid	Major frame identifier
mfid	Minor frame identifier
RT	Remote terminal
SA	Subaddress
S/S	Subsystem
T_{0Mf} ΔT	Delta time from major frame start (T_0)

1. No entry indicates non–applicable or a "don't care" choice.
2. Table count is 113 signals.
3. Acronym is 2nd 16–character field of OASIS Description. First 16–character field (not shown) contains External Element, which for MISR is "MIS_." Leading 2 characters define functional signal: CD = configuration derived, CR = configuration raw, IR = current raw, TA = temperature active, TP = temperature passive, and VR = voltage raw per Type/Source codes. Since T indicates temperature, temperature is not part of Description structure. Also see Table II.
4. Type: A = active analog, B = passive bi–level, D = digital value, P = passive analog, SB = S/C passive bi–level and SP = S/C passive analog.

Table III. Telemetry List (cont'd) (TBD 25)

Acronym (Note 1)	Telemetry Point		Type (Note 4)	RT	SA	Major Frame		Minor Frame		T_{0Mf} ΔT	Reference Section
	S/S	Description				1st Mfid	# mfs	1st Bit	# Bits		
		Temp, TEC2, CJT, Ca	P								
		Temp, TEC2, CJT, Cf	P								
		Temp, TEC2, CJT, Da	P								
		Temp, TEC2, CJT, Df	P								
		Temp, TEC. HJT. Aa	P								
		Temp, TEC. HJT. Af	P								
		Temp, TEC. HJT. An	P								
		Temp, TEC. HJT. Ba	P								
		Temp, TEC. HJT. Bf	P								
		Temp, TEC. HJT. Ca	P								
		Temp, TEC. HJT. Cf	P								
		Temp, TEC. HJT. Da	P								
		Temp, TEC. HJT. Df	P								

Notes:

1st bit	1st bit transmitted, most significant bit, leftmost bit
Mf	Major frame
mf	Minor frame
Mfid	Major frame identifier
mfid	Minor frame identifier
RT	Remote terminal
SA	Subaddress
S/S	Subsystem
T_{0Mf} ΔT	Delta time from major frame start (T_0)

1. No entry indicates non–applicable or a "don't care" choice.
2. Table count is 113 signals.
3. Acronym is 2nd 16–character field of OASIS Description. First 16–character field (not shown) contains External Element, which for MISR is "MIS_." Leading 2 characters define functional signal: CD = configuration derived, CR = configuration raw, IR = current raw, TA = temperature active, TP = temperature passive, and VR = voltage raw per Type/Source codes. Since T indicates temperature, temperature is not part of Description structure. Also see Table II.
4. Type: A = active analog, B = passive bi–level, D = digital value, P = passive analog, SB = S/C passive bi–level and SP = S/C passive analog.

Table III. Telemetry List (cont'd) (TBD 25)

Acronym (Note 1)	Telemetry Point		Type (Note 4)	RT	SA	Major Frame		Minor Frame		T_{0Mf} ΔT	Reference Section
	S/S	Description				1st Mfid	# mfs	1st Bit	# Bits		
		Cover Open	SB								
		Cover Closed	SB								
		North Calibration Panel Dep	SB								
		North Calibration Panel Stowed	SB								
		South Calibration Panel Dep	SB								
		South Calibration Panel Stowed	SB								
		Goniometer Stowed	SB								
		Temp, +Z Radiator	SP								
		Temp, –Y Radiator	SP								
		Temp, Optical Bench (–X)	SP								
		Temp, Optical Bench (+X)	SP								
		Temp, Optical Bench (Mid)	SP								
		Temp, Camera Da, PS	SP								
		Temp, Computer	SP								

Notes:

1st bit	1st bit transmitted, most significant bit, leftmost bit
Mf	Major frame
mf	Minor frame
Mfid	Major frame identifier
mfid	Minor frame identifier
RT	Remote terminal
SA	Subaddress
S/S	Subsystem
T_{0Mf} ΔT	Delta time from major frame start (T_0)

1. No entry indicates non–applicable or a "don't care" choice.
2. Table count is 113 signals.
3. Acronym is 2nd 16–character field of OASIS Description. First 16–character field (not shown) contains External Element, which for MISR is "MIS_." Leading 2 characters define functional signal: CD = configuration derived, CR = configuration raw, IR = current raw, TA = temperature active, TP = temperature passive, and VR = voltage raw per Type/Source codes. Since T indicates temperature, temperature is not part of Description structure. Also see Table II.
4. Type: A = active analog, B = passive bi–level, D = digital value, P = passive analog, SB = S/C passive bi–level and SP = S/C passive analog.

6.1 (TBD 26) [Telemetry Function]

The **(TBD 26)** [telemetry] schematic is shown in Figure 4–1.

(TBD 27)

Figure 4–1. (TBD 26) [Telemetry] Schematic

Size	Code Ident No.		
A	49671	20008837	Sheet 32

7 MICROPROCESSORS

(TBD 28)

7.1 Microprocessor Control

(TBD 28)

7.2 Microprocessor Operation

(TBD 28)

7.3 Microprocessor Functional Requirements

(TBD 28)

7.4 Microprocessor Memory Load

(TBD 28)

7.5 Microprocessor Memory Dump

(TBD 28)

7.6 Microprocessor Memory Error Detection

(TBD 28)

8 DATA FORMATS

[Define all formats at the instrument level. Include when valid by mode.]

(TBD 29)

8.1 Command and Telemetry Bus Messages

(TBD 29)

8.1.1 Command and Telemetry Bus Command Messages

(TBD 29)

8.1.2 Command and Telemetry Bus Critical Health and Safety Telemetry Messages

(TBD 29)

8.1.3 Command and Telemetry Bus Normal Housekeeping Telemetry Messages

(TBD 29)

8.2 Science Data Packets

The MISR science data rate is shown in Table IV.

Table IV. Science Data Rate (TBD 29)

	Data Rate (Mbps)	
	2–Orbit Average	Peak
Estimate	4.0	6.5
Basis (%)		
Estimated		
Calculated		
Actual		

8.2.1 Engineering Packets

(TBD 29)

8.2.2 Science Packets

(TBD 29)

8.3 Test Patterns

(TBD 29)

9 CONSTRAINTS

(TBD 30)

9.1 Testing Constraints

(TBD 30)

9.2 Operational Constraints

(TBD 30)

9.3 Environmental Constraints

(TBD 30)

20043115
CAGE No. 49671
26 August 1993

(PRELIMINARY)

EOS-AM Spacecraft

MODERATE RESOLUTION IMAGING SPECTRORADIOMETER (MODIS)

INSTRUMENT FLIGHT OPERATIONS UNDERSTANDING

Prepared Under:
Contract No. NAS5-32500
NASA Goddard Space Flight Center
Greenbelt, Maryland 20771

Prepared by:
Martin Marietta
Astro-Space
P. O. Box 800
Princeton, New Jersey 08543-0800

REVISION LOG

This log identifies those portions of this document which have been revised since original issue.

Revision	Paragraph Number(s) Affected	Rev. Date	Approval
Draft	All	17 March 1993	N/A
Preliminary	All	26 August 1993	N/A

TABLE OF CONTENTS

SECTION/ PARAGRAPH	TITLE	PAGE
1	INTRODUCTION	1
1.1	Purpose	1
1.2	Scope	1
2	DOCUMENTATION	2
2.1	Applicable Documents	2
2.2	Information Documents	2
3	INSTRUMENT DEFINITION	3
3.1	Basic Description	3
3.2	Instrument Operations	4
3.2.1	Operating Modes and Configurations	5
3.2.2	Microprocessor Operation	7
3.2.3	Instrument Commands	7
3.2.4	Instrument Telemetry	8
3.2.4.1	Science Data	8
3.2.4.2	Engineering Data	8
3.2.4.3	Housekeeping Data	8
3.2.5	Bus Data Unit	8
3.2.6	Operating Constraints	9
3.2.6.1	Categories of Constraint/Restraints	9
3.2.6.2	MODIS Operating Constraints	9
3.2.7	Activation	10
4	OPERATIONAL SYSTEM DEFINITION	11
4.1	Spacecraft Bus	11
4.1.1	Command and Telemetry Systems	13
4.1.2	Spacecraft Controls Computer	15
4.1.2.1	Spacecraft Controls Computer Description	15
4.1.2.2	Spacecraft Controls Computer Operation	18
4.1.3	Command and Telemetry Interface Unit	22
4.1.4	Science Formatting Equipment	26
4.1.5	Solid State Recorder	29
4.1.6	Bus Data Unit	36
4.1.7	Initial Spacecraft Operation	36
4.1.8	Spacecraft Maneuver Operations	37
4.1.9	Autonomous Operations	38
4.1.10	Spacecraft Bus Operating Modes	38
4.1.11	Spacecraft Bus - Instrument Operating Modes Relationships	44

TABLE OF CONTENTS (continued)

SECTION/ PARAGRAPH	TITLE	PAGE
4.2	Ground System	46
4.2.1	Space Network	46
4.2.2	FDF	48
4.2.3	NASCOM	49
4.2.4	Science Support Networks	49
4.2.5	Alternate Space/Ground Links	50
4.2.6	EOSDIS	50
4.2.6.1	EDOS	50
4.2.6.2	ECOM	51
4.2.6.3	ECS	52
4.2.6.3.1	FOS	52
4.2.6.3.2	SDPS	55
4.2.6.3.3	CSMS	56
5	FUNCTIONAL RESPONSIBILITY ALLOCATIONS	57
5.1	Planning and Scheduling	57
5.1.1	Long Term Planning	58
5.1.2	Initial Scheduling	58
5.1.3	Daily Planning and Scheduling	59
5.1.4	Planning Aids	60
5.2	Uplink Generation	60
5.3	Real-Time Operations	61
5.4	Performance Verification	62
5.5	Database and Software Maintenance	62
5.6	Early Orbit Operations	63
5.6.1	Launch - Orbit Acquisition Mission Phases	64
5.6.2	Activation	68
5.6.3	Transition to Orbital Operations	69
5.7	Spacecraft Maneuvers	70
5.8	Special Observations	70
5.9	Contingencies	70
6	INTERFACE EXCHANGE ITEMS	73
6.1	Planning and Scheduling	73
6.2	Command Generation	74
6.3	Real Time Operations	74
6.4	Analysis	74
6.5	Operations Database	75
6.6	Other Interface Exchange Items	75

TABLE OF CONTENTS (continued)

SECTION/ PARAGRAPH	TITLE	PAGE
7	JOINT OPERATING PROCEDURES	76
7.1	PI/EOC FOT Interface	76
7.1.1	Daily Operations Planning	76
7.1.2	Command Generation	77
7.1.3	Special Operations	77
7.1.4	EOC Database	77
7.1.5	Microprocessor Load Verification	77
7.2	PI/EOC Command Management Interface	78
7.2.1	Operations Plans	78
7.2.2	Planning Aids	78
7.2.3	Command Generation	78
7.2.4	Performance Feedback	78
7.3	PI/FOT Interface	79
7.3.1	Real Time Operations	79
7.3.2	Special Operations	79
7.3.3	Initial Operations	79
7.3.4	Performance Verification	79
7.4	PI/DAAC Interface	80
7.5	PI/ Access to Telemetry	80
8	IMPLEMENTATION AGREEMENTS	81
8.1	Flight Operations Database	81
8.1.1	Commands	81
8.1.2	Instrument Telemetry	81
8.1.3	Instrument Limits	81
8.1.4	Database Approval	82
8.2	Operational Displays	82
8.3	Operations Procedures	82
8.3.1	EOC Definition	82
8.3.2	I&T Procedures to EOC Operations Procedures Conversion	82
8.3.3	I&T Databases to EOC Operations Databases Conversion	83
8.3.4	Flight Unique Procedures	83
8.3.5	Procedure Submittal	83
8.3.6	Approved EOC Procedures	83
8.3.7	Procedure Verification	83
8.4	Narrative Procedures	83
8.4.1	Standard Operating Procedures	84
8.4.2	Contingency Operating Procedures	84

TABLE OF CONTENTS (continued)

SECTION/ PARAGRAPH | TITLE | PAGE

APPENDIX I

10 SPACECRAFT CONTROLS COMPUTER INSTRUMENT REQUIREMENTS 85
10.1 Stored Command Requirements 85
10.1.1 Absolute Time Commands 85
10.1.2 Relative Time Sequences () 85
10.2 Telemetry Monitor Requirements 85

APPENDIX II

20 INSTRUMENT COMMAND PROCESSING REQUIREMENT .....
20.1 Activity Planning Requirements 86
20.1.1 Activity Definition 86
20.1.2 Event Definition 86
20.1.3 Activity Scheduling 86
20.2 Constraint Check Requirements 86
20.2.1 Command Level 86
20.2.2 Activity Level 86
20.2.3 Schedule Conflicts 87
20.3 Real-Time Command Requirements 87
20.3.1 Utilization Plans 87
20.3.2 Command Generation Capabilities 87
20.3.3 Transmission Requirements 87

TABLE OF CONTENTS (continued)

SECTION/ PARAGRAPH	TITLE	PAGE
20.4	Microprocessor Load Handling Requirements	87
20.4.1	Uplink Message Structures	87
20.4.2	Transmission Requirements	87
20.5	Command Database Requirements	87
20.5.1	Command Definition	88
20.5.2	Unique Command Structures	88
20.5.3	Activity Definitions (EOC Command Management)	88
20.5.4	Stored Command Sequences (EOC Command Management)	88
20.5.5	Real-Time Command Sequences (EOC)	88
20.5.6	Utilization Constraints	88

APPENDIX III

30	TELEMETRY PROCESSING REQUIREMENTS	89
30.1	Decommutation Requirements	89
30.1.1	Engineering Telemetry Format	89
30.1.2	Science Telemetry Format (20 Mbps)	89
30.2	Derived Function Generation Requirements	89
30.3	Status Determination Requirements	89
30.3.1	Mode Definition	89
30.3.2	Event/Mode-Change Detection	89
30.4	Uplink Verification Requirements	90
30.4.1	Command Verification	90
30.4.2	Microprocessor Load Verification	90
30.5	Health and Safety Monitoring Requirements	90
30.5.1	Limit-Check Requirements	90
30.5.2	Alarm Requirements	90
30.6	Display Generation Requirements	90
30.6.1	Parameter Calibration	90
30.6.2	CRT Page Display	91
30.6.3	Strip-Chart Recorder Displays	91
30.6.4	Hardcopy Outputs	91

TABLE OF CONTENTS (continued)

SECTION/ PARAGRAPH	TITLE	PAGE
30.7	EOC Telemetry Database Requirements	91
30.7.1	Telemetry Function Definition	91
30.7.2	Derived Function Definition	91
30.7.3	Mode/Event Definition	91
30.7.4	Limit Check Thresholds	91
30.7.5	Alarm Generation Criteria	91
30.7.6	Command Verification Criteria	92
30.7.7	Display Definition	92
30.7.8	Calibration Parameters	92

APPENDIX IV

40	INSTRUMENT OPERATIONAL ACTION REQUIREMENTS	
40.1	Contingency Action Requirements	93
40.1.1	Emergency Power-Down	93
40.1.2	Limits/Alarm Reaction	93
40.1.3	Spacecraft Safe hold (SCC running)	93
40.1.4	SCC Halted	93
40.1.5	Other On-board Computers Halted	93
40.1.6	Uplink Transmission Failure	93
40.2	Preactivation Requirements	93
40.3	Spacecraft Maneuver Accommodation	94
40.3.1	Orbit Adjust	94
40.4	Alignment/Calibration Requirements	94
40.5	Special Observation Requirements	94

APPENDIX V

50	PLANNING AID REQUIREMENTS	95
50.1	Parameter Definition	95
50.1.1	Long Term	95
50.1.2	Short Term	96
50.2	Parameter Specifications	96
50.2.1	Information Accuracy	96
50.2.2	Data Precision	96
50.2.3	Data Frequency	97
50.3	Information Handling Requirements	97
50.3.1	Format	97
50.3.2	Packaging	97

TABLE OF CONTENTS (continued)

SECTION/ PARAGRAPH	TITLE	PAGE
50.4	Access Timeline Requirements	97
50.4.1	Lead Time	97
50.4.2	Retention	97

APPENDIX VI

60	SPECIAL ACTIVATION REQUIREMENT	98
60.1	Commanding Requirements	98
60.1.1	Special Command Sequences	98
60.1.2	Special Command Constraints	98
60.1.3	Real-time Command Generation	98
60.1.4	Special Command Transmission Requirements	98
60.2	Telemetry Processing Requirements	98
60.2.1	Special Telemetry Formats	98
60.2.2	Special Processing Functions	99
60.2.3	Special Processing Parameters	99
60.2.4	Special Displays	99
60.2.5	Strip Chart Recorder	99
60.3	Remote Support Coordination Requirements	99
60.3.1	Quick-look Playback Handling	99
60.3.2	Voice Communications	99
60.4	Facility Requirements	99

APPENDIX VII

70	ABBREVIATIONS	100

LIST OF FIGURES

FIGURE	TITLE	PAGE
1	MODIS Nominal Operational Timeline	4
2	MODIS Operating Mode Flow	6
3	EOS-AM Spacecraft Mission Phases	12
4	Uplink Paths	13
5	Downlink Paths	14
6	Absolute Time Stored Command Structure	18
7	Absolute Time Stored Command Operation	19
8	Relative Time Command Sequence Structure	20
9	Relative Time Command Sequence Operation	21
10	CTIU Command Processing Flow	23
11	CTIU Telemetry Processing Flow	24
12	SFE Interface Block Diagram	28
13	SSR Basic Configuration	29
14	SSR Science Data Buffer Utilization	31
15	SSR Typical Operating Scenario	32
16	SSR Operation Profile	35
17	Typical Operational Initialization Phase Activities Timeline	36

LIST OF FIGURES (continued)

FIGURE	TITLE	PAGE
18	Orbit Maintenance Scenario	37
19	Spacecraft Operating Modes Availability	39
20	Top Level Space Network Scheduling Process	47
21	EOC / Space Network Scheduling Timeline	48
22	EOC Staffing Structure	53
23	MODIS IST User Perspective	54
24	Launch / Ascent Phase Timeline	65
25	Orbit Acquisition Mission Phase Timeline	67
26	DELTA-V Activity Flow	68
27	PI Facility / EOC FOT Interface	76

LIST OF TABLES

TABLE	TITLE	PAGE
I	MODIS Operational Modes	5
II	MODIS Command Operating Procedures	7
III	Proposed SSR Buffer Sizing	30
IV	Spacecraft Bus and MODIS Operating Modes	45

TO BE DETERMINED (TBD) LIST

TBD	SEC. / PAGE	DESCRIPTION	RESPONSIBLE	DUE

This list will be added with the final update

TO BE REVIEWED (TBR) LIST

TBR	SEC. / PAGE	DESCRIPTION	RESPONSIBLE	DUE

This list will be added with the final update.

TO BE SUPPLIED (TBS) LIST

TBS	SEC. / PAGE	DESCRIPTION	RESPONSIBLE	DUE

This list will be added with the final update.

(This page intentionally left blank.)

1 INTRODUCTION

This Instrument Flight Operations Understanding (IFOU) is a statement of the EOS-AM community's understanding regarding the Moderate Resolution Imaging Spectroradiometer (MODIS) flight operations plans and requirements.

This Instrument Flight Operations Understanding will be updated periodically as requirements evolve and are further defined. Inputs are welcomed from the Instrument Team, Flight Operations Team, EOS Ground Systems, NASA Institutional Facilities, and the EOS-AM Project entities.

1.1 Purpose

This IFOU will be used by the Flight Operations Team (FOT) and EOS Operations Center (EOC) support personnel in defining prelaunch preparation efforts and in verifying operational readiness prior to launch. Requirements for specific types of operational support will be defined and implemented consistent with this IFOU. This IFOU will be used to ensure that instrument needs are properly reflected in other documentation.

1.2 Scope

This document describes the EOS-AM Spacecraft MODIS operations on-orbit and instrument flight operations support. Interactivity with ground systems control and interconnectivity to the EOS ground systems segment are described. Institutional interfaces between Spacecraft, applicable ground systems and the end-user are included. The flight operations scheduling, planning, and operations philosophy are included. Aspects of the Earth Observing System Data and Information System (EOSDIS), as well as the external systems / facilities with which the Spacecraft flight operations elements interface, are only addressed as required to clarify these concepts. The focus is from the Flight Operations Team's perspective.

The understandings stated herein are explicitly subordinate to interfaces between MODIS and the EOS-AM Spacecraft, as defined in the most recent issue of the documents listed in Section 2.

This document does not take precedence over any of the requirements, specifications, documents or interfaces associated with the Spacecraft or affiliated ground systems.

2 DOCUMENTATION

2.1 Applicable Documents

The concept and content of this document are consistent with the documents listed below:

(GSFC) - 421-10-01 30 Oct. 1992	Requirements Document for the EOS-AM Spacecraft
(GSFC) - 420-03-02 01 Dec. 1992	General Instrument Interface Specification
20005396 (SEP-101) 15 May 1992	EOS-AM Spacecraft Contract End Item Specification
(GSFC) - 421-12-04-01 06 Nov. 1992	Unique Instrument Interface Document for MODIS
(GSFC) - 420-05-02 13 Nov. 1992	Performance Assurance Requirements for the EOS-AM Observatories
20008840 Date: TBD	MODIS Interface Control Document (ICD)

2.2 Information Documents

The following documents amplify or clarify the information presented in this document.

20008529 (OPD-110) 18 May 1992	EOS-AM Spacecraft Operations Requirements
EOS-DN-SE&I-010 15 May 1992	EOS Baseline Description Document (BDD)
EOS-DN-SE&I-031 23 Apr. 1992	Command and Telemetry Requirements Analysis
EOS-DN-C&DH-032 15 Dec. 1991	Command and Telemetry Concept Definition
GSFC-510-30CD/0191 26 Oct. 1992	Earth Observing System Data and Information System (EOSDIS) Flight Operations Segment (FOS) Operations Concept (Revision 3)
20008502 (UID-101) 04 Sept. 1992	General Instrument Interface Handbook

3 INSTRUMENT DEFINITION

The understandings regarding MODIS are as follows:

3.1 Basic Description

MODIS measures biological and physical processes in the study of terrestrial, oceanic, and atmospheric phenomena. The instrument provides long-term earth science data base information according to planned observational strategy.

MODIS is a NASA facility passive imaging spectroradiometer. The instrument scans a cross-track swath 2330 kilometers wide and senses 36 spectral bands for daytime observing and 17 spectral bands for nighttime observations, between 0.41 and 14.2 μm. MODIS has pixel sizes of 250 m, 500 m, and 1000 m.

MODIS has four high performance onboard calibrators:

a. Ambient or heated Blackbody

b. Solar Diffuser (two levels of reflectance)

c. Solar Diffuser Stability Monitor (compares the Solar Diffuser reflectance to direct solar view levels)

d. Spectral Radiometric Calibration Assembly which operates in four modes (Spectral, spectral self test calibration, spatial, and radiometric)

MODIS contains two instrument processors:

a. Telemetry and Command Processor

b. Format Processor

Each is comprised of two (primary and redundant) single board computers, using a GEC-Plessey 16 bit processor with a memory management unit. Both operate at 12 MHz. Memory is in radiation hardened 32Kx8 SRAM chips. The Telemetry & Command Processor (TCP) single board processor has a 48 MHz clock which is divided down for all MODIS timing.

MODIS instrument telemetry consists of science (including engineering) and housekeeping (including health and safety) data. MODIS data is recorded on-board the Spacecraft and transmitted (downlinked) during scheduled EOS-AM/TDRSS contact periods. The downlinked data is packetized and packet types assigned Application Process Identifiers (APID's).

3.2 Instrument Operations

After on-orbit activation, it is anticipated to operate MODIS continuously unless dictated otherwise by unfavorable circumstances. MODIS activities are preplanned and scheduled. MODIS TCP and Spacecraft Controls Computer (SCC) instrument commands are loaded on a TBD schedule. The TCP and SCC commands are uplinked by the EOS Operations Center (EOC) during EOS-AM/TDRSS contact periods. Figure 1 depicts a nominal MODIS operational timeline over a 24 hour period.

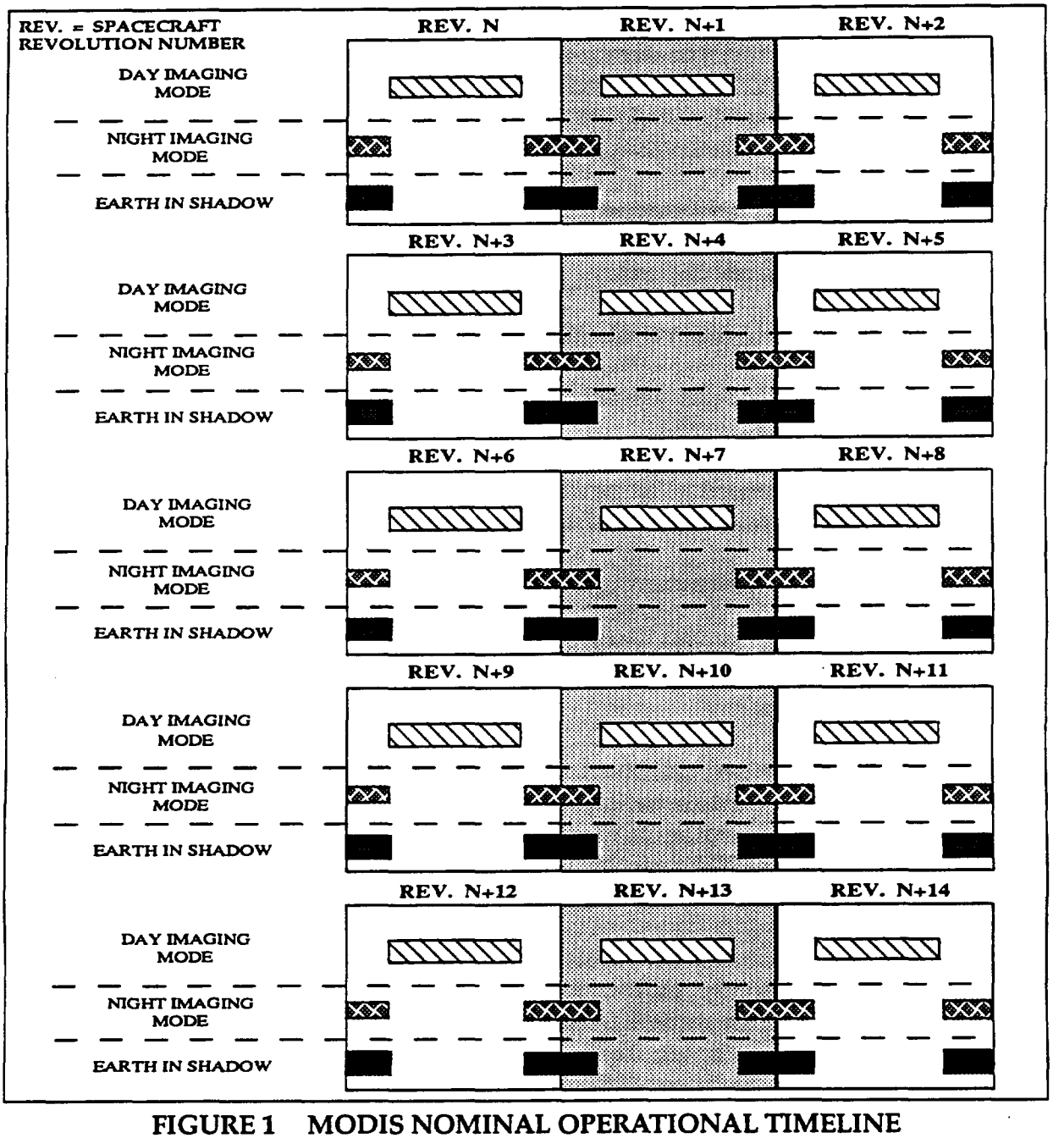

FIGURE 1 MODIS NOMINAL OPERATIONAL TIMELINE

3.2.1 Operating Modes

The MODIS operational modes are shown in Table I.

TABLE I MODIS OPERATIONAL MODES

MODE NO.	MODE NAME	DESCRIPTION
0	Launch Mode	Zero power; doors closed and latched, all subsystems and power supplies are OFF; survival heaters enabled (ON/OFF by thermostat).
1	Survival Mode	Power Supplies OFF; survival heaters enabled (ON/OFF by thermostat); enter and exit by direct command (ground or Spacecraft); enter sets macro command to close doors; final Spacecraft cmd required to turn the power supplies OFF.
2	Safe Mode	Power Supply relay ON; enter by direct command (ground or Spacecraft) or missing SCC OK message; initiate macro command to close doors and turn subsystems OFF, except CMD & TLM.
3	Standby Mode	Power Supply relay ON; CMD & TLM subsystem ON; use includes transition to other modes; doors open or closed; other configuration choices are allowed.
4	Outgas Mode	Power Supply relay ON; CMD & TLM subsystem ON; cold and intermediate stage outgas heaters ON; space view door closed for on orbit outgas, subsequent outgas may be with doors open and Visible/Near infrared imaging or third stage outgas heater on.
5	Science Mode (Day or Night)	Day Rate ~ 10.2 Mbps (All bands on) Night Rate ~ 2.7 Mhz with Bands 20 - 36 collected on Earth scenes (all band data for calibration devices.
	Calibration configuration choices are listed below.	
	• Calibration - with SD view	SD image collects for calibration of VIS, NIR & SWIR near North Pole; or SD stability calibration check over 0.4 - 2.2 μm by SDSM collects of cavity (DCR), sun & SD; or electronic ramp calibration Bands 1 - 30.
	• Calibration - with SRCA view	VIS, NIR & SWIR image collects for spatial calibration; or spatial calibration; or spatial calibration and SRCA 0.4 - .09 μm self calibration data.
	• Calibration - with blackbody view	Ambient or heated blackbody MWIR & LWIR collects. Precision blackbody temperatures in engineering packet.
	• Calibration - with space view	Normal cold space view; or occasional glimpse of the moon; or electronic ramp calibration Bands 31 - 36.

NOTE:
1) An electronic Calibration ramp may be turned on and viewed at the SD port for Band 1 - 30 and at the space view port for Band 31 - 36.
2) Calibrations inherently include imaging.
3) All calibration band data is available Day or Night Imaging.

LEGEND

CMD = Command
LWIR = Long-wave Infrared
MWIR = Mid-wave Infrared
NIR = Near Infrared
TLM = Telemetry
SCC = Spacecraft Controls Computer
SD = Solar Diffuser
SRCA = Spectroradiometric Calibration Assembly
SWIR = Short-wave Infrared
VIS = Visible

Figure 2 illustrates the flow and transition of the MODIS operational modes.

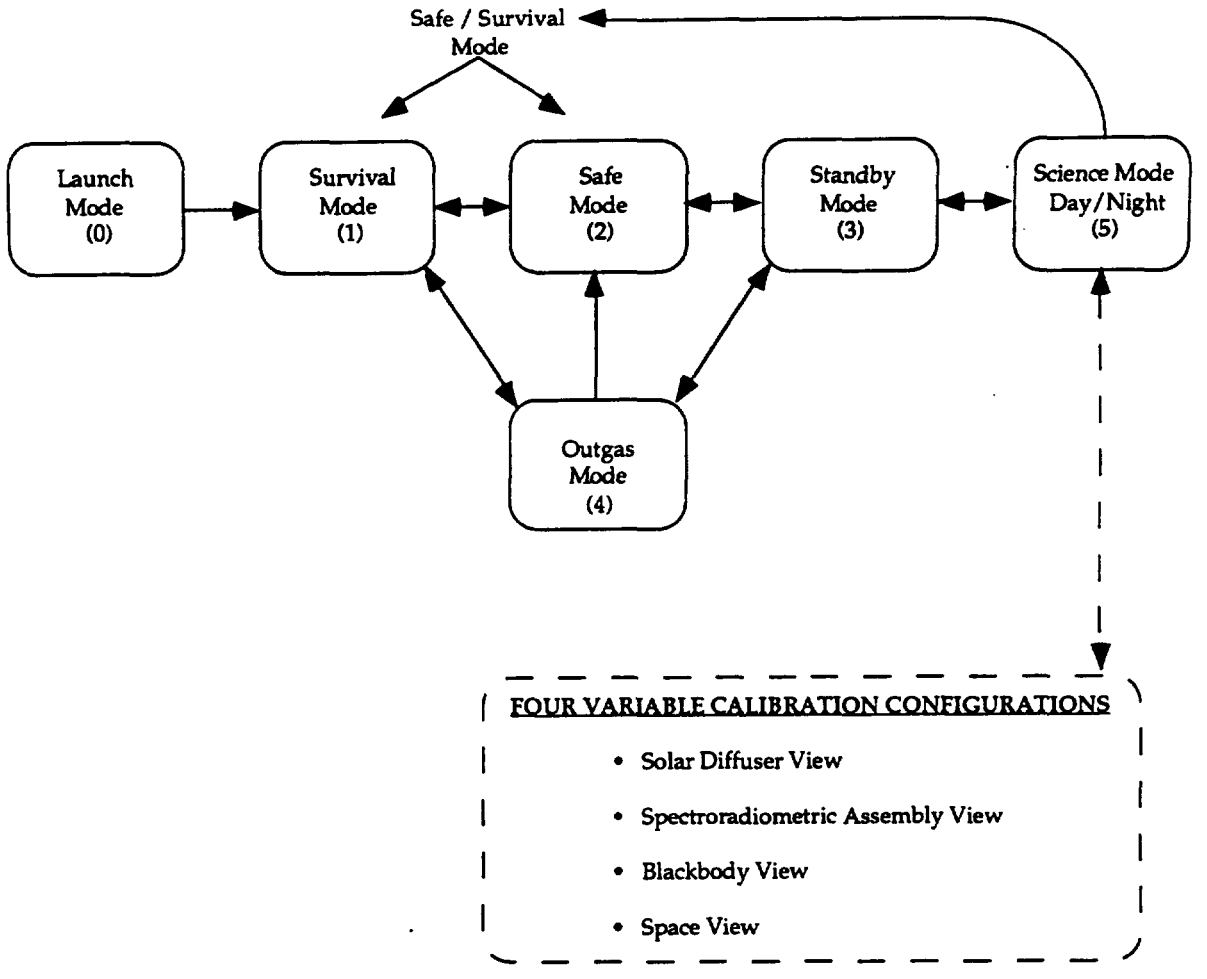

NOTES:

1. (X) = Mode Number
2. Chart defines MODIS main Operating Modes without distinction between side A or side B.
3. There are configuration options within Modes 3 & 4.
4. There is a TBD table, which defines the available configuration options, and there are TBD distinct procedures, which define the command sequences to change configurations within a Mode.
5. Science data rates are Day = ~ 10.2 Mbps & Night = ~ 2.7 Mbps with or without calibration.
6. All Mode changes are by Spacecraft command (which includes absence of SCC "OK" signal to go to Safe Mode). Doors closed for Safe and Survival Modes.
7. Survival Heaters are enabled at all times.
8. Entry into Safe or Survival Mode requires 30 seconds prior 1553 Bus macro command to close doors. Then Spacecraft Power Supply turn OFF command if going to Survival Mode.
9. 1553 Bus telemetry is not available in Launch, Survival & OFF, and at times may not be available in Safe Mode.
10. Standby utility activity can include unlatching doors, moving doors, activating failsafes, etc.

FIGURE 2 MODIS OPERATING MODE FLOW

Other Mode details are TBD.

3.2.2 Microprocessor Operation

The MODIS Telemetry and Command Processor (TCP) and Format Processor (FP) operational details are TBD. Software and tables are loaded from ROM/ground (TBD).

3.2.3 Instrument Commands

The majority of instrument commanding is performed through the use of the MODIS TCP via a MIL-STD-1553B command and telemetry bus. These commands are issued to the instrument in accordance with the time tag associated with each command.

The Bus Data Unit (BDU) provides relay drive commands to MODIS for control of the power supplies, survival heaters and to enable the fail-safe mechanisms.

Detail definition of specific commands is TBD.

MODIS uses Command Operating Procedures (COPs) to establish configurations for each operating mode. Transition commands are defined to go from one mode to the other most common, planned operating modes.

The COP identification process is being revised. The update is TBD.

Table II shows MODIS COPs.

TABLE II MODIS COMMAND OPERATING PROCEDURES

MODIS COMMAND OPERATING PROCEDURES
TBD

Real time commanding is not planned as a routine operation, however, contingency or emergency operations may require real time commanding.

3.2.4 Instrument Telemetry

Specific MODIS instrument telemetry processing requirements are defined in the following paragraphs.

3.2.4.1 Science Data

Specific MODIS instrument science telemetry processing requirements are defined in Appendix III.

3.2.4.2 Engineering Data

Specific MODIS instrument engineering telemetry processing requirements are defined in Appendix III.

3.2.4.3 Housekeeping Data

The MODIS housekeeping data is used by the Flight Operations Team for the following applications:

a. Monitor health and safety
b. Verify command execution

Specific MODIS instrument housekeeping telemetry processing requirements are defined in Appendix III.

3.2.5 Bus Data Unit

MODIS interfaces with the BDU-I #3. The interface types and numbers are:

TYPE	PRIME	REDUNDANT
Relay Drive	14	1
Bi-Level	16	0
Passive Analog	9	0

3.2.6 Operating Constraints

A constraint is a limitation imposed on the operation of the Spacecraft Bus and instruments in order to protect or prevent compromise of mission goals.

3.2.6.1 Categories of Constraint/Restraints

Constraints have been defined into the following six categories based upon the implications of violating those constraints:

a. **Mission Critical (MC)** - Those constraints which prevent permanent loss of a system, subsystem, or a component which would cause the termination of the mission. The damage to the hardware can be due to anything from a one time event to improper usage over an extended period of time.

b. **Hardware Critical (HC)** - Those constraints which prevent permanent loss of Spacecraft hardware from which recovery to full Spacecraft operational state *can not* be made. The damage to the hardware can be due to anything from a one time event to improper usage over an extended period of time. (e.g. Loss of either CERES instrument would fall into this category.)

c. **Configuration Critical (CC)** - Those constraints which prevent the loss of Spacecraft hardware from which recovery to full Spacecraft operational state *can be* made by switching to redundant hardware.

d. **Data Critical (DC)** - Those constraints which prevent permanent loss or corruption of a particular set of data, either command or telemetry.

e. **Temporary Data Loss (TL)** - Loss or corruption of data, either command or telemetry, that can be regained.

f. **Operational Restriction (OR)** - Guidelines for procedures when a number of possible operational options exist or information relevant to the proper operation of the Spacecraft.

3.2.6.2 MODIS Operating Constraints

a. Initial activation shall be performed during real-time contact with the Spacecraft.

Additional MODIS operating constraints are TBD.

3.2.7 Activation

MODIS is powered on and checked out during the Spacecraft Operational Initialization Mission Phase.

During activation MODIS is powered up in stages. The Activation Procedure (TBD) is used for this power-up phase.

Activation is:

a. Launch Mode

b. Survival Mode

c. Safe Mode

d. Standby Mode
   - Instrument microprocessor load verification and checkout
   - Series of instrument activities to be conducted per procedure and activation schedule.

e. Outgas Mode

f. Standby Mode
   - Command loads verified for the scheduled science mission.

g. Science Mode

4 OPERATIONAL SYSTEM DEFINITION

The understandings regarding operation of the EOS-AM Spacecraft and ground system, as each relates to instrument operation, are as follows:

4.1 Spacecraft Bus

The EOS-AM Spacecraft Bus provides the platform for science instrument observations, and provides the environment and services necessary to sustain instrument operability.

The EOS-AM Spacecraft mission can be described by seven mission phases. Each mission phase represents a predefined period during which a set of interrelated operations and activities are performed. The primary activities associated with these mission phases are:

a. Prelaunch -- Launch readiness of the Spacecraft, launch vehicle, and associated ground elements is established and verified.

b. Launch / Ascent -- The launch vehicle places the Spacecraft in the injection orbit and the Spacecraft senses separation from the launch vehicle.

c. Orbit Acquisition Initialization -- A positive Spacecraft energy balance and a S-Band communications link is established. A stable earth-oriented attitude is attained.

d. Orbit Acquisition -- The Spacecraft performs the maneuvers necessary to achieve operational orbit. These maneuvers are designed by the cognizant operations elements and initiated by ground command under Flight Operations Team control.

e. Operational Initialization -- The Spacecraft operational orbit is acquired. A complete housekeeping and instrument equipment checkout is performed by the Flight Operations Team with technical direction from the Spacecraft Bus contractor and the instrument PIs or delegates. A fully operational Spacecraft state is established.

f. Operational -- The Flight Operations Team is responsible for conducting Spacecraft operations. Proper Spacecraft orbit is maintained and full resources to the instruments are provided during the science mode.

g. End of Mission -- Upon decision to end the Spacecraft mission, the Spacecraft is placed in a dormant state and permitted to experience a normal orbit decay to re-entry into the Earth's atmosphere.

Figure 3 depicts a top-level flow of the EOS-AM Spacecraft mission phases.

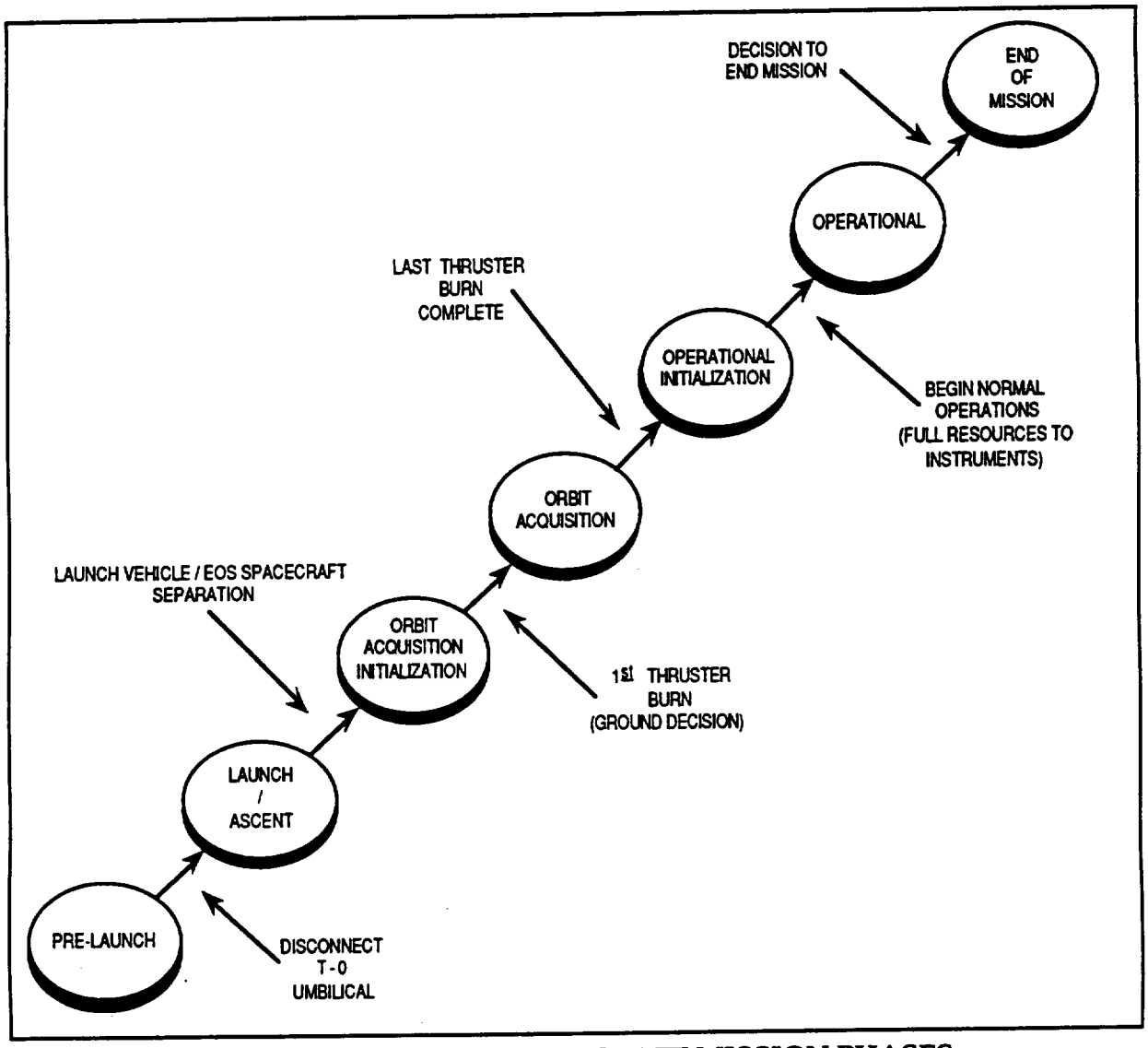

FIGURE 3 EOS-AM SPACECRAFT MISSION PHASES

4.1.1 Command and Telemetry Systems

The Spacecraft Bus command system provides the primary means of controlling the Spacecraft and instrument operations while in orbit. The Spacecraft Bus telemetry system provides the means for monitoring Spacecraft status, health and safety, and for acquiring/storing and retrieving EOS-AM science data. Command and telemetry systems hardware also generates and distributes timing signals, and produces the relative time code which appears within the telemetry format.

During normal operations, 150 Mbps science playback data (when commanded) and 16 kbps real-time housekeeping telemetry data is transmitted throughout each Spacecraft/TDRSS contact. 10 kbps command capability is available to handle uplink transmissions. The other Spacecraft Bus command and telemetry link capabilities are shown in Figure 4 (Uplink Paths) and Figure 5 (Downlink Paths). Commands may be preloaded into the SCC and issued by the stored command capability at designated times. Repetitive sequences of commands may be stored within the SCC and activated by an initiate command to reduce command transmission and storage volume.

SERVICE	SPACECRAFT ANTENNA	DATA RATE	REMARKS
SSA	HIGH GAIN	10 Kbps	NORMAL COMMAND OPERATIONS HIGH-RATE COMMANDS
SMA	HIGH GAIN	1 Kbps	LOW-RATE COMMANDS
SSA	OMNI	125 Bps	CONTINGENCY VERY LOW-RATE COMMANDS
DSN/GN/WOTS	OMNI	2 Kbps	EMERGENCY

LEGEND

SSA = S-BAND SINGLE ACCESS
SMA = S-BAND MULTIPLE ACCESS

DSN = DEEP SPACE NETWORK
GN = GROUND NETWORK
WOTS = WALLOPS ORBITAL TRACKING STATION

FIGURE 4 UPLINK PATHS

SERVICE	TYPE	DATA RATES I	Q	ANTENNA	CONTENT	USE
KSA	Play Back or Real Time	75 Mbps	75 Mbps	High Gain	Science Data	Science Mission Processing
SSA	Play Back		256 Kbps	High Gain	Health & Safety Housekeeping Data SCC Dump Data	As required for Anomaly follow up
	Real Time	16 Kbps	16 Kbps			Routine Operation
			1 Kbps	OMNI	Critical Health & Safety SCC Dump Data	Operation without High Gain Antenna
			1 Kbps			
SMA	Real Time		16 Kbps	High Gain	Housekeeping Data Diagnostic	Operation without SSA
DSN GN WOTS	Real Time	16 Kbps	16 Kbps	OMNI	Housekeeping Data Diagnostic	Operation without TDRSS
	Play Back		512 Kbps			Emergency Operations
DB	Real Time	12.5 Mbps	12.5 Mbps	Direct Access System	Real-Time Science Data	MODIS Real-Time Data
DB/DDL		12.5 Mbps	105 Mbps			MODIS (I), ASTER (Q) Real-Time Data
DP	Play Back	75 Mbps	75 Mbps	Direct Access System	Playback Science Data	Instrument Playback Data
DB	Real Time	12.5 Mbps		Direct Access System	Real-Time Science Data	MODIS Real-Time Data
DP	Play Back		105 Mbps		Playback Science Data	Instrument Playback Data

LEGEND

DB = Direct Broadcast
DDL = Direct Downlink
DP = Direct Playback
DSN = Deep Space Network
GN = Ground Network
WOTS = Wallops Orbital Tracking Station

KSA = K-band single access
SSA = S-band single access
SMA = S-band multiple access
TDRSS = Tracking and Data Relay Satellite System

FIGURE 5 DOWNLINK PATHS

The Direct Access System (DAS) provides for direct-to-user downlink of science data via the X-band transmission system which is independent of the High Gain Antenna (HGA). A summary of Spacecraft downlink services, including the DAS, is shown in Figure 5 (Downlink Paths).

Normal operation will be to configure the DAS for continuous operation in the Direct Broadcast (DB) mode, providing uninterrupted output of real-time MODIS science data along the orbital path. When scheduled by the EOC, the DAS Direct Broadcast/Direct Downlink (DB/DDL) mode will provide direct-to-user ASTER science data on the X-Band Q channel, in addition to the MODIS data on the X-Band I channel.

The DAS Direct Playback (DP) mode is considered an emergency mode and will be used only in the event the Solid State Recorder (SSR) science data cannot be played back through the HGA.

The EOC scheduling function will coordinate DAS operations with the user ground stations. The Spacecraft DAS services will be managed via the SCC stored command and Relative Time Command Sequence (RTCS) capability.

4.1.2 Spacecraft Controls Computer

The Spacecraft Controls Computer (SCC) provides the hardware, software and firmware support for control of on-board operational processes.

Specific requirements for interaction between SCC functions and instrument operation are defined in Appendix I.

4.1.2.1 Spacecraft Controls Computer Description

There are redundant SCCs, each of which hosts the firmware to provide SCC initialization functions. Both SCCs can be simultaneously powered and host the full software load but only one SCC can be active at any time. Once loaded, the active SCC software provides a real-time Operating System and supports the execution of application software for the Spacecraft subsystems and instruments. The SCC provides a number of application software services to maintain Spacecraft and instrument operability.

a. The SCC Operating System/Executive is a standardized operating system which supports the execution of the SCC applications software and manages the SCC resources (I/O, scheduling, memory management, timing).

b. The Command, Telemetry and Control (CT&C) application interfaces with all SCC-resident software and provides the following services:

1. Validation and distribution of ground commands for SCC applications software execution.

2. Performs system level Fault Detection, Isolation and Recovery (FDIR). The FDIR software resides in the SCC applications programs and in the Telemetry Monitor (TMON).

3. Storage and processing of Absolute Time Commands (ATC) and Relative Time Command Sequences (RTCS).

4. Sequencing control of SCC-issued subsystem and instrument commands (Absolute-time stored commands, Relative-time stored commands, closed-loop control commands and FDIR commands).

5. Performs Spacecraft Time management, and provides for generation and distribution of the SCC Time of Day (TOD) information to the instruments.

6. Collects SCC telemetry for inclusion in the downlinked telemetry stream.

7. Collects, formats and distributes Ancillary data to the instruments via the Command & Telemetry Bus.

c. The Attitude Determination and Control (ADAC) application software provides software to acquire and maintain Spacecraft attitude within the accuracy limits necessary for instrument operation. The ADAC application provides control of the Solar Array Drive and High Gain Antenna via closed-loop control and FDIR commands.

d. The Navigation (NAV) software performs Spacecraft orbit determination and control. NAV provides position and vector information to the ADAC. NAV also provides telemetry data, Doppler compensation information, closed-loop control and FDIR commands.

e. The Thermal Monitor and Control Software (TMCS) provides autonomous control of the active Spacecraft thermal control elements [Heater Controller Electronics (HCEs) and Capillary Pump Heat Transport System (CPHTS)] to maintain the Spacecraft bus and instrument temperatures within allowable operational limits. The TMCS provides telemetry data, closed-loop control and FDIR commands.

f. The Power Monitor and Control Software (PMCS) provides autonomous control of the Electrical Power System (EPS), including battery charge control and automatic load shedding. The PMCS provides telemetry data, closed-loop control commands and FDIR commands.

The Telemetry Monitor (TMON) will be used to monitor critical Spacecraft bus and instrument telemetry. TMON provides the on-board capability to monitor spacecraft housekeeping data and SCC memory and to initiate autonomous action when predefined anomalous conditions occur. TMON has the capability to mask out telemetry information, perform logical operations on the telemetry information and compare the results to predefined values. If specific anomalous conditions occur, TMON will trigger predetermined actions which may be 1) no action, 2) issue a spacecraft command, or 3) issue a command to activate a Relative Time Command Sequence (RTCS). When a TMON action is triggered, a message will be inserted in the spacecraft activity log which will specifically define the action taken. TMON is table-driven via the telemetry monitor tables, which are ground-controllable. Each TMON function may be individually enabled or disabled by ground command. Each TMON function may also be inhibited from issuing its predetermined commands, while still being allowed to perform its comparison check and notify the activity log if an anomalous condition is detected.

The Fault Detection, Isolation and Recovery (FDIR) system is designed to autonomously reconfigure the Spacecraft in response to predefined survival-critical hardware or software failures. The intent of the FDIR is to minimize autonomous switching, while protecting the Spacecraft Bus and instruments and providing those services required for survival. Anomalies which are not time critical will be resolved by ground intervention rather than FDIR action. Most of the FDIR software resides in the SCC application software programs. FDIR utilizes the TMON software to perform simple, table-driven FDIR functions.

The FDIR system monitors the state of various Spacecraft hardware and software functions, determines fault occurrence and generates fault recovery commands to the Spacecraft. When necessary, the FDIR controls the Spacecraft entry into Safe

Mode and Survival Mode. Since the SCC may not be functional during these modes, some FDIR functions are distributed in hardware throughout the Spacecraft. If the SCC is non-functional, stored command and RTCS operation will also be interrupted. Safe Mode and Survival Mode recovery will be accomplished only by ground command.

4.1.2.2 Spacecraft Controls Computer Operation

During normal flight operations a SCC stored command table memory load will be performed once per day with the list of Absolute Time Commands (ATC) and associated time tags necessary to perform Spacecraft operations for the next 24 hours. Figure 6 shows the stored command structure.

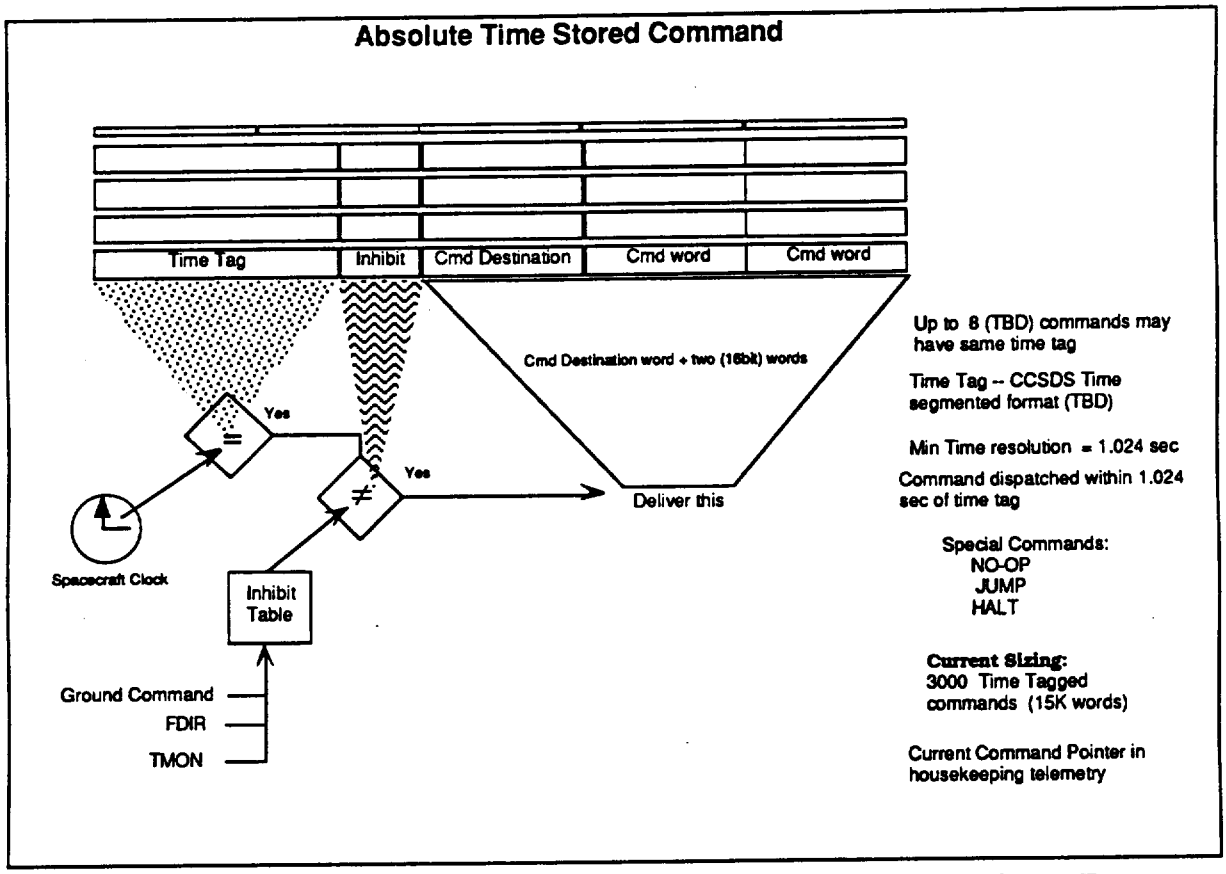

FIGURE 6 ABSOLUTE TIME STORED COMMAND STRUCTURE

The SCC will distribute each stored command to the appropriate spacecraft or instrument subsystem when the time tag matches the Spacecraft time. The command time tag resolution is 1.024 seconds. The SCC has the capability to accept, store and distribute up to 3000 stored commands. Each stored command has an associated inhibit identifier by which the SCC identifies the functional group to which the command belongs. All commands in a functional command group (as determined by the SCC inhibit table) may be inhibited from execution by either ground command or FDIR/TMON generated command. Figure 7 depicts stored command operation. Stored command loads will be planned to occur at least 6 hours prior to the end of the last stored command load, so there may be up to 30 hours of Spacecraft commands in the stored command table at that time. Specific stored-command requirements for instrument operation are defined in Appendix I.

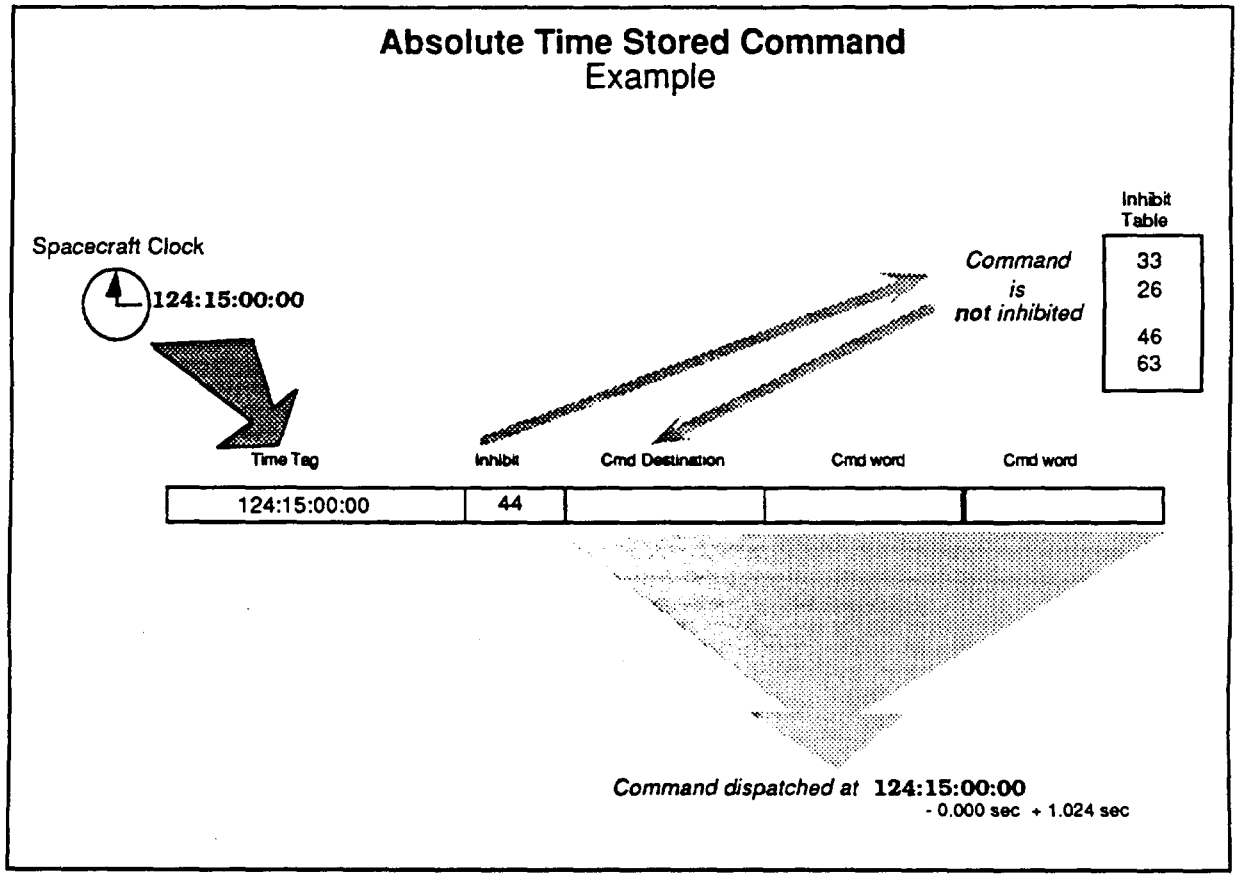

FIGURE 7 ABSOLUTE TIME STORED COMMAND OPERATION

During flight operations, groups of commands known as Relative Time Command Sequences (RTCSs) will be used to provide at least 128 SCC-resident predefined command sequences. Each RTCS has an associated RTCS sequence number, an inhibit ID, and up to 16 Relative Time Commands with associated relative time tags. Figure 8 illustrates the RTCS structure. RTCSs may be executed by ground command, stored command, SCC (FDIR/TMON) generated command or by another Relative Time Command. The relative time tag associated with each command defines the time delay relative to the previously dispatched command. Relative time tags have a resolution of 1.024 seconds. Each RTCS will have an associated inhibit identifier by which the RTCS may be inhibited from execution by ground command or FDIR/TMON generated command. No inhibit identifier will be provided for individual commands within the RTCS. Multiple RTCSs may be active at the same time.

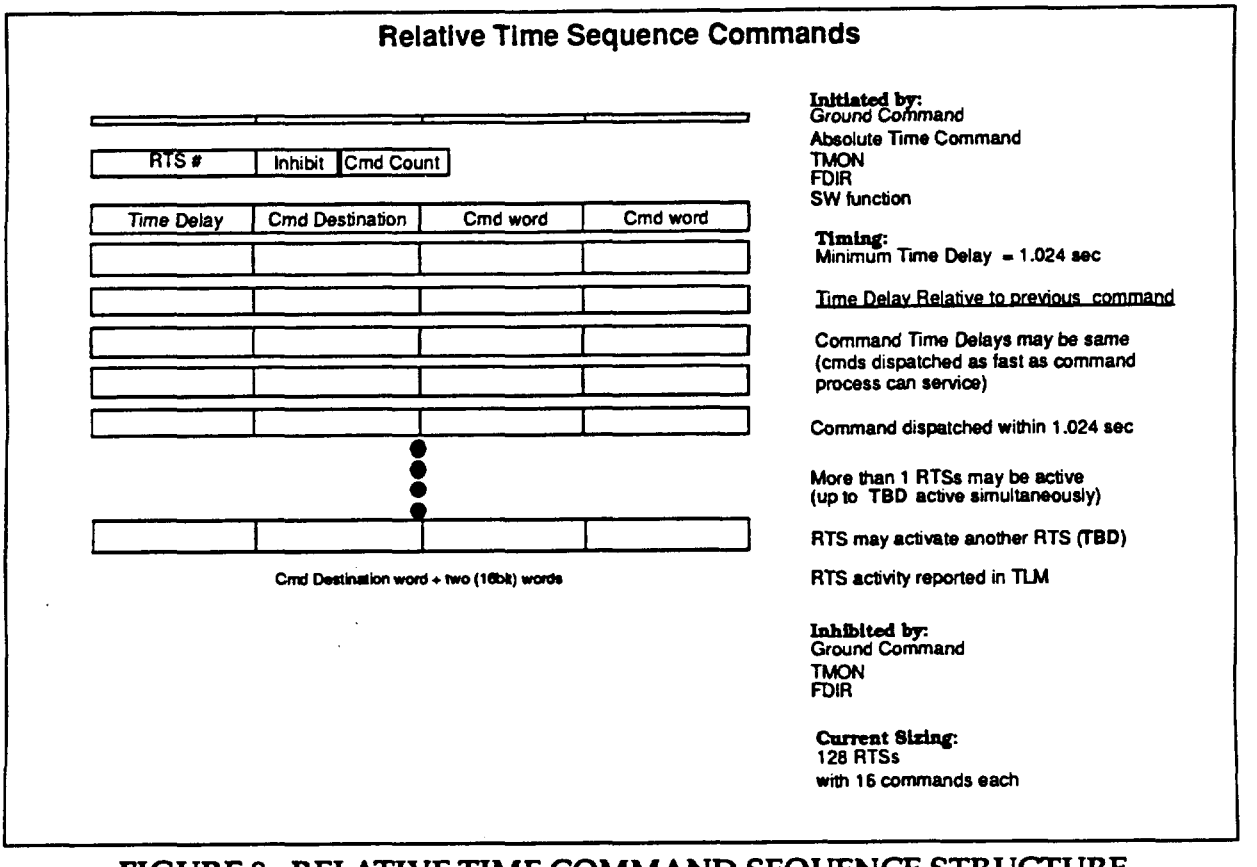

FIGURE 8 RELATIVE TIME COMMAND SEQUENCE STRUCTURE

RTCSs will be loaded into the SCC via ground command and will remain in the SCC memory until removed or over written by ground command. They do not require reloading on a regular basis. RTCSs will be used to perform repetitive functions on-board the Spacecraft (thus reducing the number of stored commands required), and as a command resource for the TMON/FDIR software.

Specialized RTCSs may be loaded, particularly during the Launch through Operational Initialization Mission Phases, for such time-critical operations as solar array release and deployment in order to minimize the need for ground control. These RTCSs will be deleted and/or replaced for normal operations.

Figure 9 depicts RTCS operation.

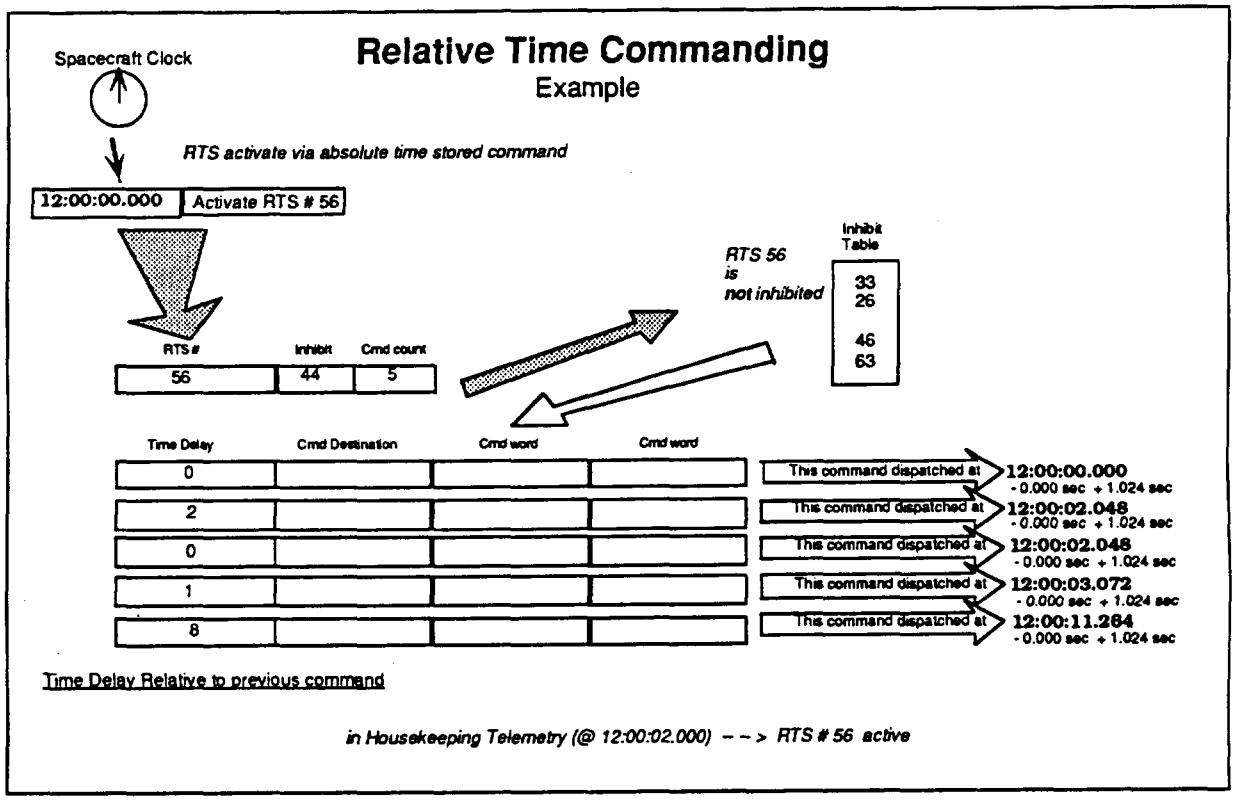

FIGURE 9 RELATIVE TIME COMMAND SEQUENCE OPERATION

4.1.3 Command and Telemetry Interface Unit

The Command and Telemetry Interface Unit (CTIU) is a central component for command and telemetry processing. The CTIU provides the processing and routing of command and telemetry data between the ground system, the Spacecraft Controls Computer and the Spacecraft instruments and housekeeping systems. The CTIU provides the following spacecraft services:

a. Uplink command decoding, processing, and distribution within the spacecraft.

b. Collection and formatting of spacecraft housekeeping and ancillary data in preparation for mass storage or immediate downlink.

c. Spacecraft command, telemetry and closed-loop interfaces to the Spacecraft Controls Computer (SCC).

d. Maintenance and distribution of Spacecraft Time and reference frequencies within the spacecraft including the coordination of Spacecraft Time with ground timing and ranging systems.

There are two redundant CTIUs, only one of which is active at any time and which acts as the Command and Telemetry (C&T) bus controller. The other CTIU is a 'hot standby' and acts as a Remote Terminal (RT). Both CTIUs are always powered when the Spacecraft is powered. Both the active and standby CTIUs can receive and execute uplinked CTIU-specific commands.

The active CTIU receives commands and command data from the ground via the S-Band Transponder, in addition to FDIR commands , closed-loop commands, and Absolute-time and Relative- time stored commands from the Spacecraft Controls Computer. CTIU-specific commands are executed immediately, while SCC-specific commands and command data (SCC table, software or stored command loads) are transferred to the SCC via the CTIU-to-SCC serial interface. The CTIU processes and distributes all other command data (Spacecraft or instrument commands and microprocessor loads) to the appropriate subsystem or instrument via the C&T bus. Since the SCC may be inoperative when the Spacecraft is in safe mode, only the CTIU processes real-time ground commands. Figure 10 illustrates the CTIU command processing flow.

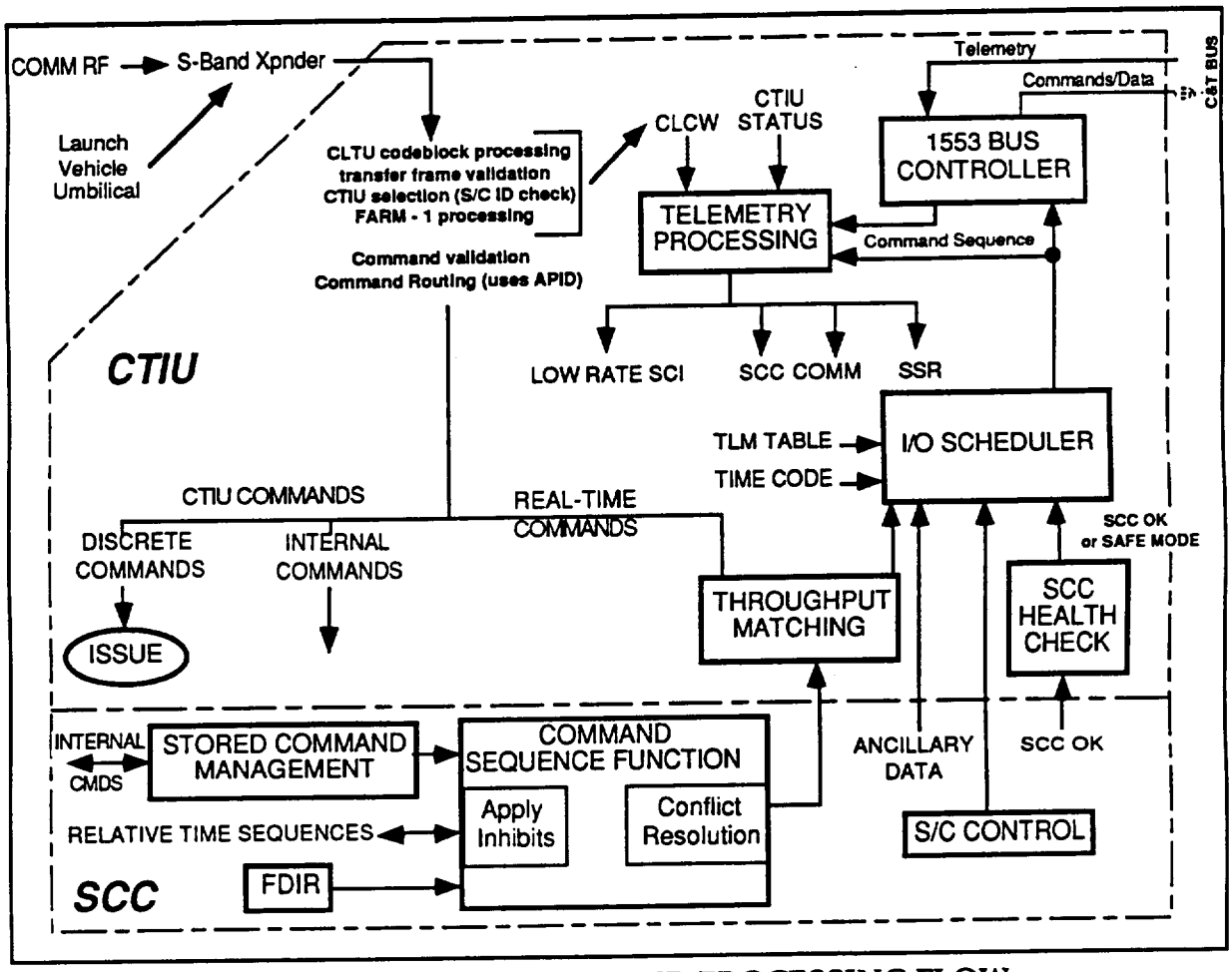

FIGURE 10 CTIU COMMAND PROCESSING FLOW

The CTIU receives Spacecraft subsystem and instrument telemetry via the C&T bus and the Bus Data Units (BDU). The CTIU formats the telemetry data for output to the Solid State Recorder (SSR) and/or the S-Band Transponder. Figure 11 shows the CTIU telemetry processing flow.

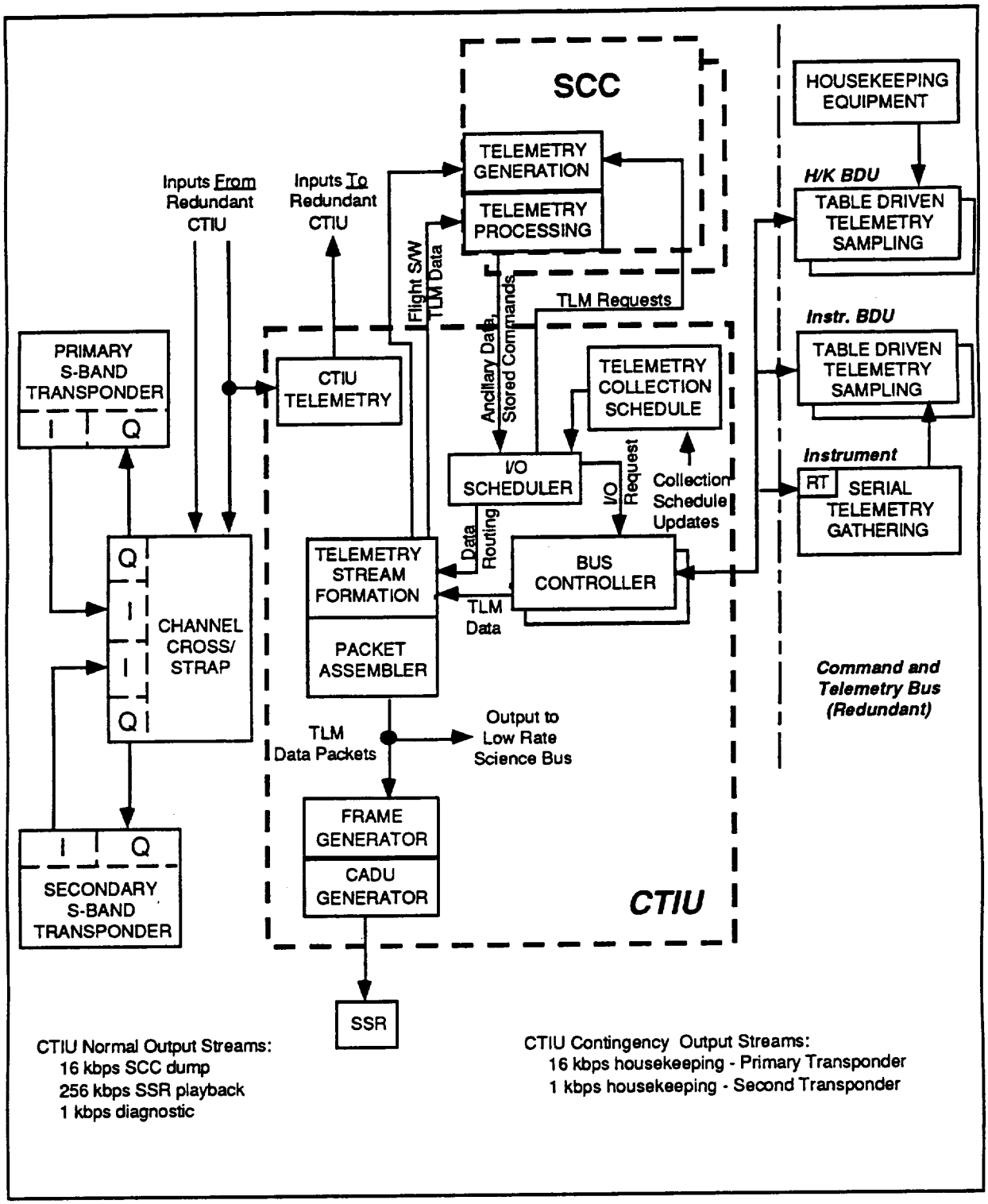

Figure 11 CTIU TELEMETRY PROCESSING FLOW

The active CTIU also provides the Spacecraft master clock and time services. The Master Oscillator (MO) provides the frequency reference signals to the S-Band transponder and CTIU with a frequency accuracy of 1 part in 10^8.

The CTIU propagates the master Spacecraft Clock using the MO frequency reference. The difference between the Spacecraft Clock and Universal Time Code (UTC) is the Clock error, which will grow due to the time-integrated effect of MO frequency errors. The Clock error must be periodically measured, and must be corrected when it approaches 30 milliseconds. The CTIU supports the accurate measurement of the Clock error via the ground based NASA User Spacecraft Clock Calibration System (USCCS). The USCCS is a distributed system using TDRSS White Sands Ground Terminal (WSGT), Network Control Center (NCC), EOS Data and Operations System (EDOS), EOC, and the on-board transponder to determine and correct the Spacecraft Clock error. USCCS software is required in the EOC to process the information and provide the on-board clock bias. The USCCS system currently guarantees calibration accuracy of +/-5 microseconds with respect to UTC. It is anticipated that EOC would request a clock calibration as often as once per day, and will update the Clock bias as necessary to maintain 10 microsecond accuracy.

The Spacecraft Clock may be set and adjusted either by ground command or from SCC-resident software. Both initialization and delta-time (fine adjustment) commands are supported. Clock initialization commands generally cause service interruption in the navigation system and will be used only for system initialization and failure recovery. Delta-time adjustment commands may be executed with a 1 microsecond accuracy and cause minimal disturbance to the system for short periods of time. Delta-time adjustments will be used for clock adjustments when necessary. Clock adjustment and bias update operations will be scheduled to provide minimum perturbation to instrument operations. The EOC FOT will provide coordination of all clock adjustments and bias updates and notification of all users of time-tagged Spacecraft data, as required.

The CTIU also provides two separate time and synchronization services :

a. The Standard Time (ST) service provides moderate accuracy synchronization and Time Of Day (TOD) information in support of Spacecraft housekeeping functions. In general, Spacecraft functions (except for navigation) do not require knowledge of Universal Time Code (UTC), but some functions such as stored command processing do require Time Of Day (TOD) knowledge.

b. The Precise Time (PT) service delivers high accuracy, high precision time data to the science instruments and the on-board navigation function, which have more stringent accuracy requirements. The instruments require an on-board time reference accurate to within 100 microseconds relative to UTC. The desired accuracy for navigation measurement data time tagging is +/- 10 microseconds.

4.1.4 Science Formatting Equipment

The Science Formatting Equipment (SFE) is part of the high-rate data handling system for the Spacecraft. The major function of the SFE is to internally route science data from the SSR, High Rate instrument and Low Rate Science Bus input ports to the appropriate SSR, KSA and DAS modulator output ports. Data routing in the SFE consists of processing the asynchronous packetized input data and transferring the data, in the proper format, to the KSA and/or DAS modulators or to the SSR output (record) port at data rates up to 150 Mbps.

The SFE is fully redundant, including the buses, the bus controllers, and the internally cross-strapped input and output ports. The SFE generates all internally used frequencies.

The SFE input interfaces are defined as follows:

a. The Low Rate Science Bus provides for up to 6 remote terminals including the instruments and the 2 CTIUs. The Low Rate Science Bus will carry telemetry data, ancillary data, and low rate science instrument (CERES and MOPITT) data with a maximum aggregate input data rate of 200 kbps. The SFE will control the Low Rate Science Bus via two Bus Controllers, only one of which will be active at any given time.

b. Each of the SFE High Rate serial input ports will accept variable size packets of science data at up to 50 Mbps from the high rate data Instruments.

c. The SFE will receive SSR playback data on two redundant ports, only one of which will be active at any time. The data rate for the active port will be selectable at 0, 105 or 150 Mbps.

d. The BDU interface provides control of the SFE configuration, operating mode and input/output rates through either SCC or ground generated commands

The SFE output interfaces are as follows:

a. The SFE will output independent data streams to each channel of the redundant KSA and DAS modulators. The KSA modulators each have a single channel, while the DAS modulators each have two independent channels.

b. The SSR record interface consists of unidirectional ports from the SFE to the SSR. Only the SSR Record interface port which is connected to the active SSR controller will be active. The SFE/SSR record data stream consists of Channel Access Data Units CADUs at a fixed recording rate of 150 Mbps.

c. The BDU interface provides for the collection of SFE housekeeping telemetry During normal operations the SFE will be configured to output specific data streams, accepting and routing instrument and Low Rate Science Bus data to the SSR and the modulators:

1. The SSR record output will be configured to record all High Rate instrument and Low Rate Science Bus data.

2. The KSA modulator output will be configured for SSR playback via TDRSS, requiring ground commands during each TDRSS contact to turn the SFE playback clock on and off.

3. The Direct Access System (DAS) Direct Broadcast (DB) link will transmit real-time MODIS instrument data.

4. The DAS Direct Downlink (DDL) will transmit ASTER real-time data.

The FOT will monitor the SFE performance during real-time housekeeping telemetry data reception.

The SFE interfaces are shown in Figure 12.

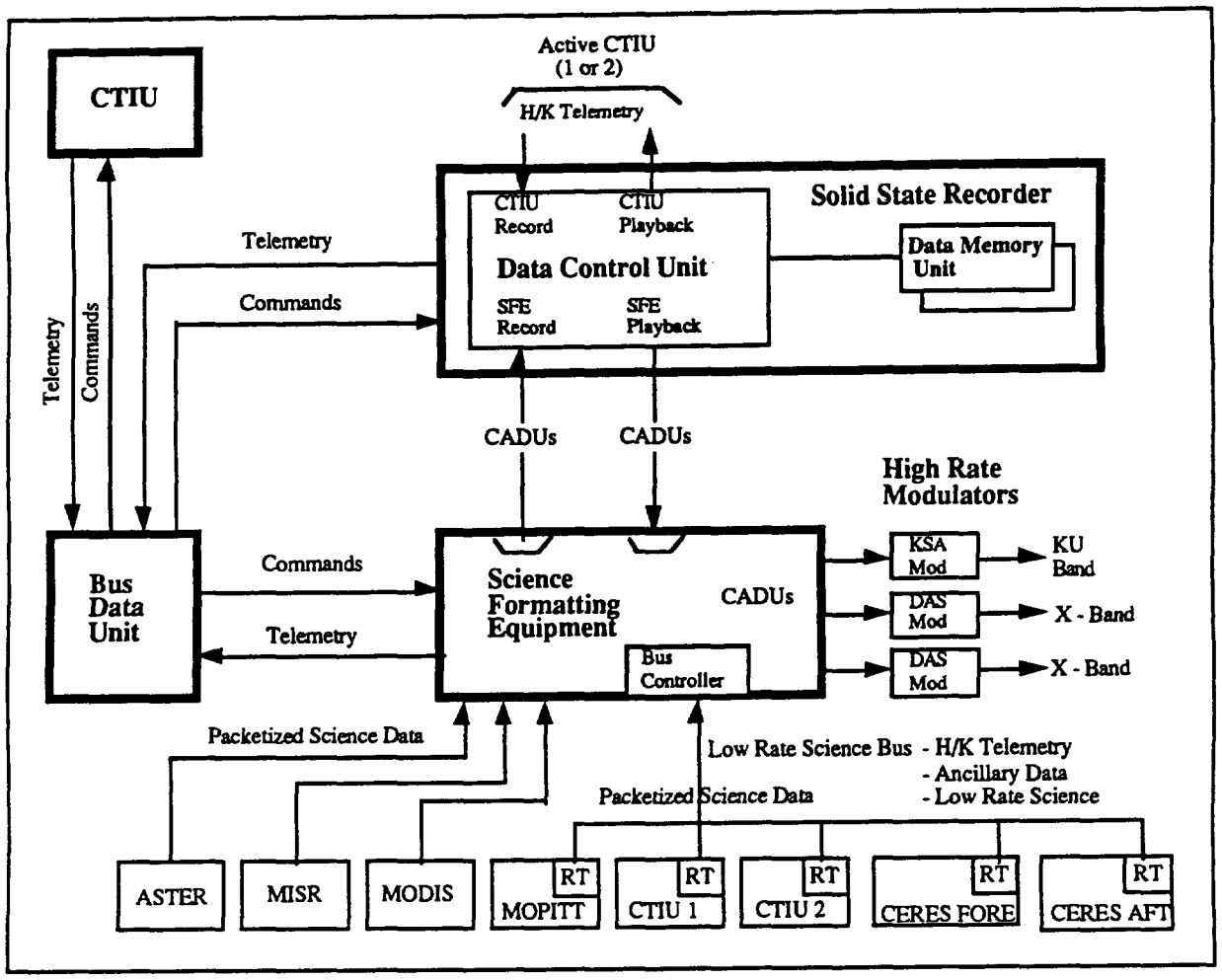

FIGURE 12 SFE INTERFACE BLOCK DIAGRAM

4.1.5 Solid State Recorder

The Solid State Recorder (SSR) is a high capacity data storage device consisting of two redundant Data Control Units (DCUs), and two identical Data Memory Units (DMUs). Figure 13 shows the SSR basic configuration. In operation, only one DCU is active at a given time. The DCU contains the record/playback processing, and command and telemetry processing. A part of the 2.4 Gbit DCU memory (357 Mbit) is allocated to housekeeping telemetry data storage. The total 140 Gbit memory capacity is provided by the two DMUs plus the local memory contained in the DCU. The SSR may be commanded into a Low Power Mode in order to provide the CTIU interfaces and the associated record/playback functions while minimizing the SSR power dissipation. In the Low Power Mode, only the active DMU and its local memory is powered and housekeeping telemetry record and playback via the CTIU is available. Low Power Mode is entered when the SSR is powered up and may be entered by command from the Science Mode.

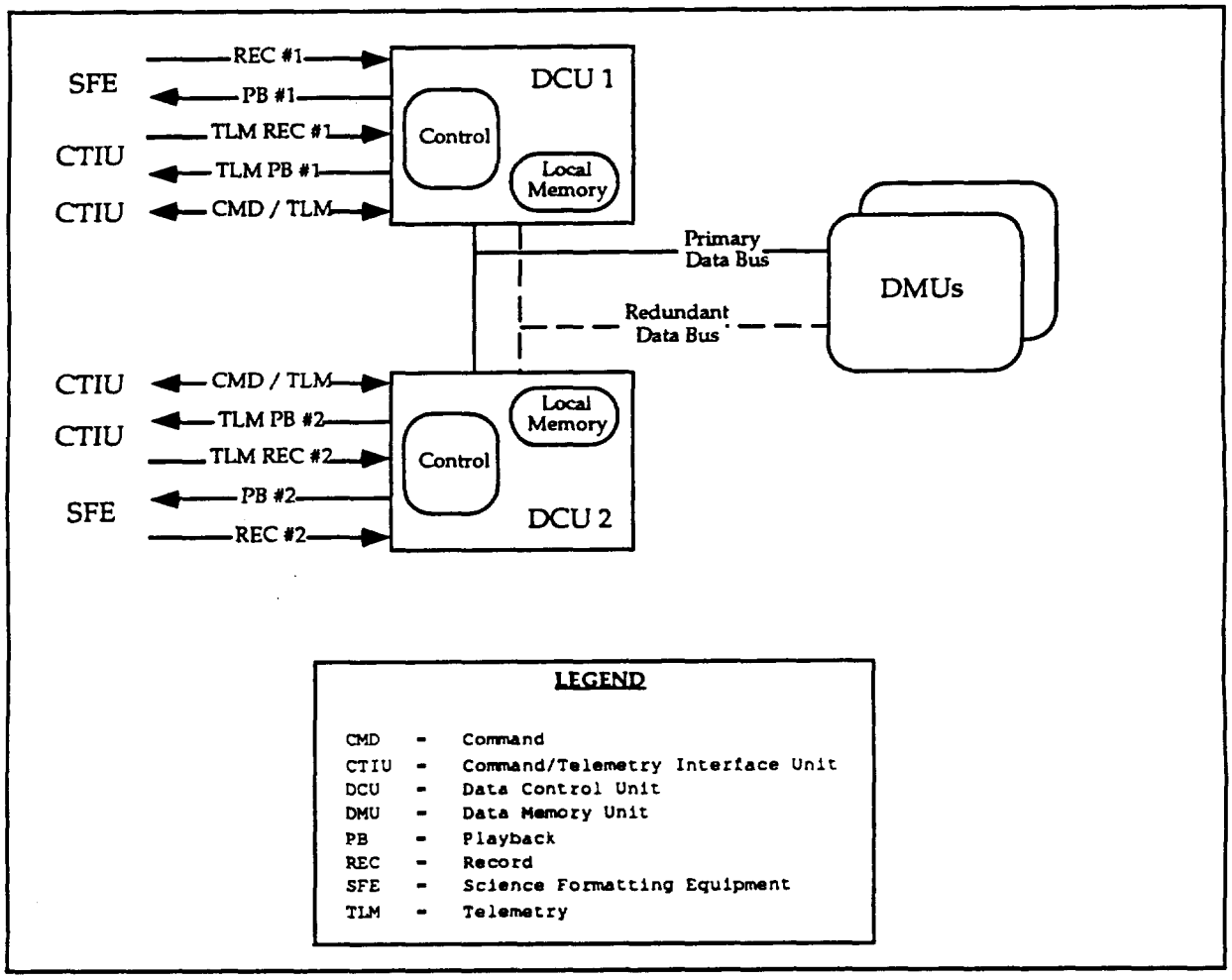

Figure 13 SSR Basic Configuration

The SSR is capable of simultaneously recording and playing back science data via interfaces with the Science Formatting Equipment (SFE). Concurrently the SSR is capable of recording or playing back housekeeping telemetry data via an interface with the CTIU. The SFE and CTIU interfaces operate independently of each other.

The SSR is capable of recording science data from the SFE at a data rate of 150 Mbps. The SSR will sort and record spacecraft science data in separate logical data buffers sorted according to the Virtual Channel Identifier (VCID) of the data source. Up to eight science data storage areas [circular first in first out (FIFO)] buffers may be provided, each accepting data from a single or multiple VCIDs. The four ASTER VCIDs may be directed to a single data buffer. Figure 14 illustrates the SSR science data buffer utilization. This capability will provide for selective playback of the science data. The proposed buffer sizes will accommodate at least one full orbit of data when instruments are operated in their predicted profiles. The current proposed buffer sizes are shown in Table III. Each SSR buffer may be commaned to allow the oldest data to be overwritten or to protect the data (overwrite inhibited).

Table III Proposed SSR Buffer Sizing

Data Type	Buffer Size	Remarks
Housekeeping	357 Mbits	Four Orbits of data
Low Rate Science	357 Mbits	105 minutes of data
MODIS	44.8 Gbits	60 mins day rate, 50 mins night rate
MISR	24.9 Gbits	67 mins of data. > 1 orbit nominal ops
ASTER	69.6 Gbits	12.9 mins at 90 Mbps.

The SSR is capable of playing back recorded science data at a maximum data rate of 150 Mbps. The SSR input and output data streams consist of integral numbers of 8192 bit blocks which are referred to as Channel Access Data Units (CADUs). The first requested CADU for each requested playback shall be preceded by the last 100 to 256 CADUs played back from this buffer during the previous playback. The SSR will not erase science data during playback, but the oldest data will be overwritten when a new recording session occurs directly over previously recorded data. The science data output stream from each buffer will be in the same time order in which it was recorded. The SSR is capable of playing back any ground-specified portion of the stored science data.

The SSR is capable of recording and playing back 16 Kbps Spacecraft housekeeping telemetry data via cross-strapped interfaces to the Spacecraft CTIUs. The housekeeping input and output data streams consist of housekeeping telemetry CADUs which are recorded in and played back from the 357 Mbit circular FIFO DCU buffer. The SSR can record or playback the housekeeping data concurrently with the science data playback, but cannot record and playback housekeeping data simultaneously. After four orbits the DCU buffer will be filled, and the SSR will overwrite the housekeeping data.

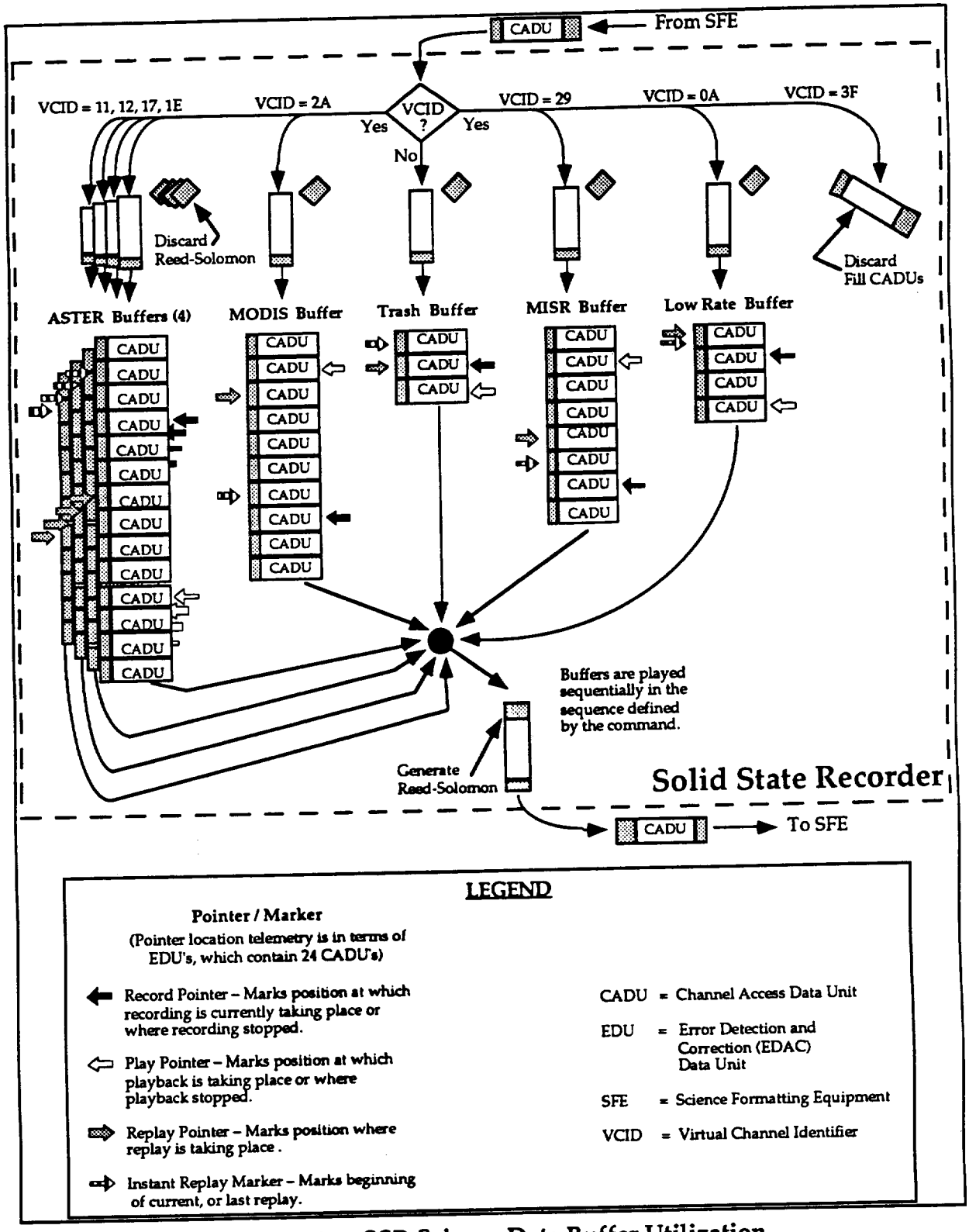

Figure 14 SSR Science Data Buffer Utilization

See Figure 15 for a typical operating scenario.

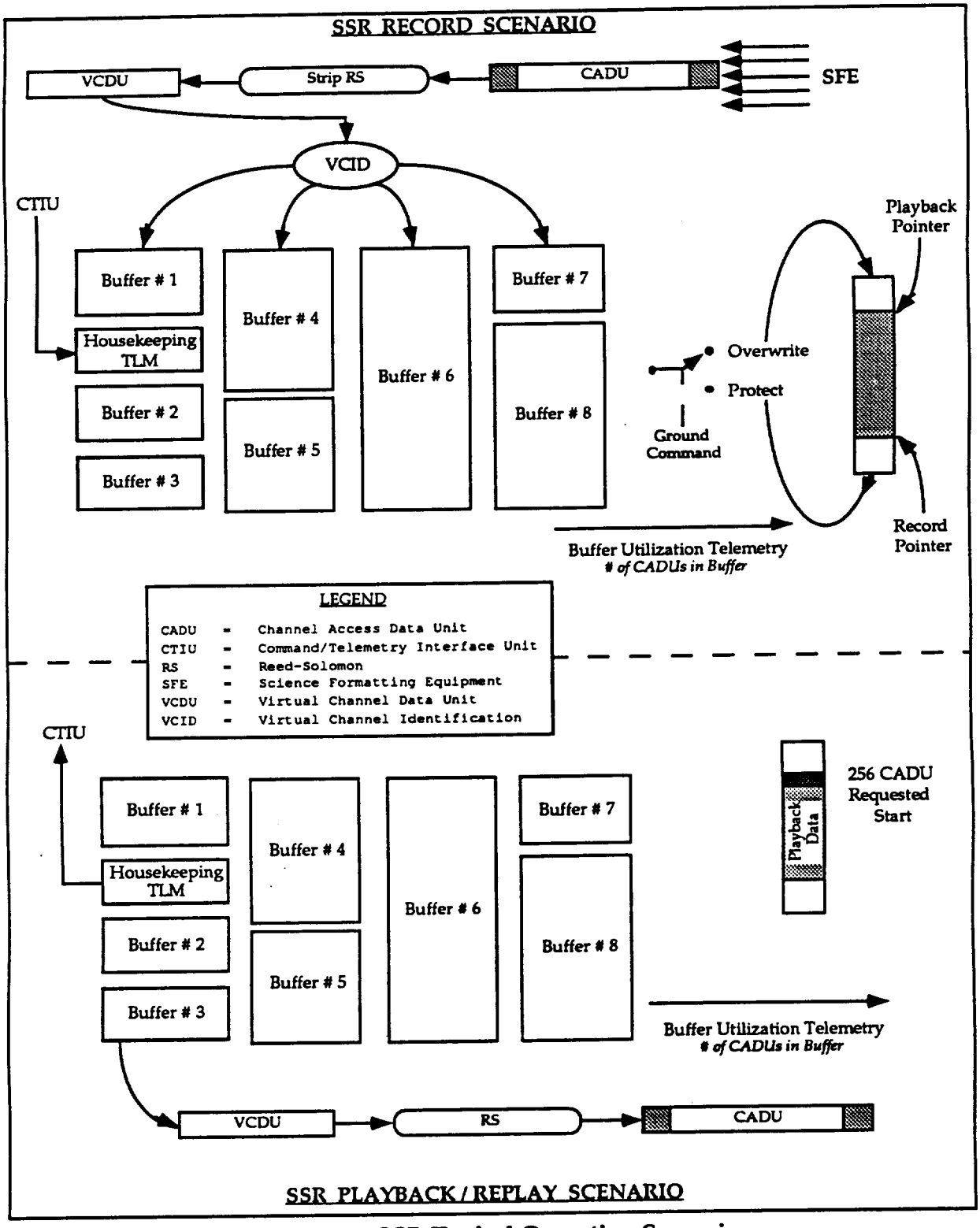

Figure 15 SSR Typical Operating Scenario

The SSR plays back stored housekeeping data at a ground-commanded rate of either 256 Kbps (via TDRSS) or 512 Kbps (via DSN/GN/WOTS). The output data stream consists of integral numbers of CADUs. The first requested CADU for each playback will be preceded by the last 100 to 256 CADUs played back from the buffer during the previous playback. The SSR will not erase telemetry data during playback, but the data will be overwritten when a new record segment occurs directly over previously recorded data regardless of the playback status of the previously recorded data. The telemetry data output stream will be in the same time order in which it was recorded.

The SSR telemetry will provide status information for each buffer which will be evaluated by the EOC to assure complete data retrieval. The status information will indicate:

a. The locations of the beginning of data that has not been dumped
b. The current location of the record pointer
c. The location of the dump pointer.

The EOC will track the instrument science and the housekeeping telemetry data times, the data position in the SSR memory, and the playback status of recorded data in order to ensure no loss of either science or housekeeping data.

Normal SSR operation will be to record all science data, with the SSR always in Record mode and the SSR data input being determined by the instrument operations. The high rate instruments and Low Rate Science Bus output will be recorded in separate buffers. The operating plan for retrieving science data from the SSR is to play back the data during two nominal 10 minute TDRSS contacts during each EOS-AM orbit. At the data rates available, a full SSR (all buffers full) would take approximately 18 minutes to dump completely. Since the peak data generation of the instrument set occurs during the daylight observations, and six to eight minutes of SSR playback will occur during each ten minute TDRSS contact, all data contained on the SSR may not be retrievable during a single 10 minute contact.

TDRSS contact spacing and location will be influenced by the Spacecraft/TDRS/Earth geometry and the TDRSS scheduling requirements, but equally spaced contacts (approximately 40 minutes apart) are the current plan.

SSR operations will be controlled by a combination of stored and real-time commands. Science instrument data start/stop operations will be initiated by stored commands generated by the EOC scheduling function, while memory configuration, mode change, playback and communication link configuration commands will be via real-time commands.

Nominal SSR operations (see Figure 16 for the SSR operation profile) will be as follows:

a. The housekeeping telemetry data will be continuously recorded in the DCU memory, overwriting the housekeeping buffer after approximately 3.5 orbits. The housekeeping buffer will be played back only in the event of a Spacecraft anomaly or to provide specific data for ground analysis.

b. The SSR will continuously record CERES, MOPITT, ancillary and telemetry data from the Low Rate Science Bus via the SFE into the Low Rate buffer. This data will continue to be recorded even while the SSR is being played back.

c. The SSR will record science data from the instruments via the SFE into their respective buffers. The ASTER data may be recorded into one buffer or may be sorted by VCID into four different buffers.Instrument data will continue to be recorded even if the SSR is being played back during the record period.

d. The SSR science data will be played back during each scheduled 10 minute TDRSS contact (twice per orbit). The science data buffers will be played back in sequence, oldest data first, such that sufficient space is available in each buffer to accommodate the science data scheduled to be recorded before the next TDRSS contact.

e. The ASTER and MISR buffers will be completely played back if possible.

f. The LOW Rate and MODIS buffers will nominally never be completely emptied since the instruments will be continuously producing science data. Playing back older science data while simultaneously recording new science data will be the normal operational configuration.

g. SSR playback start and stop will be controlled by ground command.

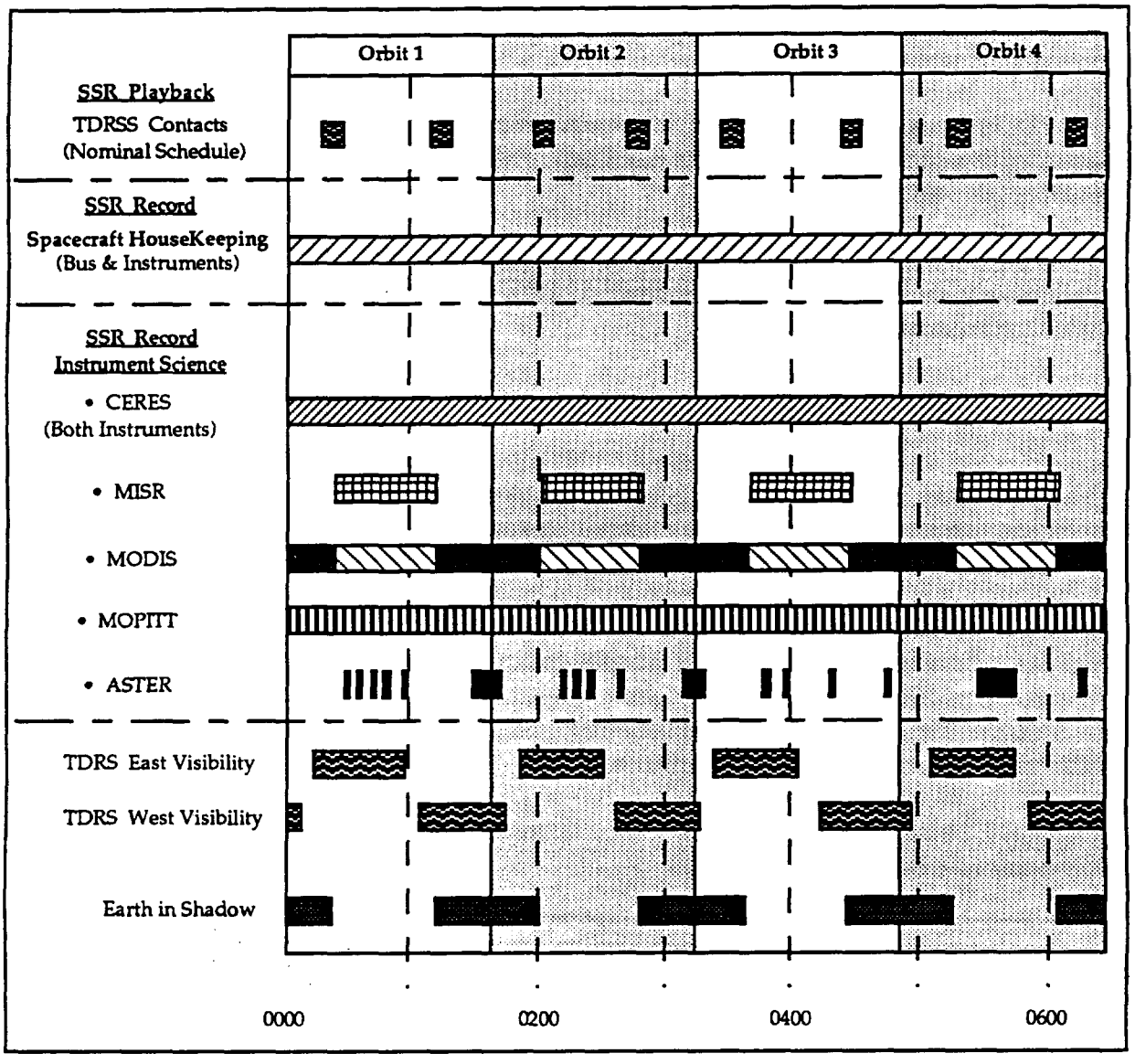

Figure 16 SSR Operation Profile

4.1.6 Bus Data Unit

Bus Data Unit(s) (BDU) provide standard command and telemetry interfaces between the Spacecraft housekeeping components and instruments. The BDU is an internally redundant device.

The BDUs collect, reformat and transmit housekeeping and instrument telemetry data to the active CTIU via the C&T bus. The BDU provides analog/digital signal conversion and conditioning.

The BDUs also receive command data from the active CTIU via the C&T bus, processing and issuing the commands. BDUs may issue relay drive, logic pulse or serial commands.

4.1.7 Initial Spacecraft Operation

The Spacecraft command and telemetry systems are active during all Spacecraft mission phases, and are fully available to support initial activation and subsequent operation of MODIS.

The Spacecraft operational orbit is acquired during the Spacecraft Operational Initialization Phase. A complete housekeeping and instrument equipment checkout is performed and a fully operational system state is established. The EOC activities are augmented by Spacecraft engineering support from the contractor's facility and TBD Instrument Team representatives.

Figure 17 shows a typical time-line representation of the activities during the Operational Initialization Phase.

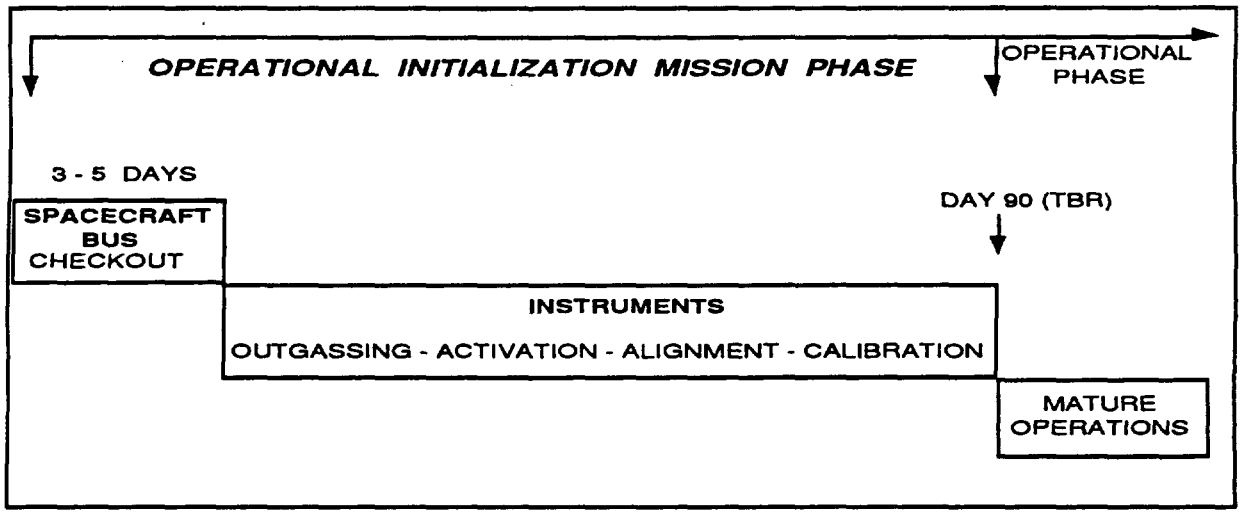

FIGURE 17 OPERATIONAL INITIALIZATION PHASE ACTIVITIES TIMELINE

4.1.8 Spacecraft Maneuver Operations

Throughout the EOS-AM mission, periodic orbit maintenance maneuvers are executed by the Spacecraft to maintain the operational (705 km) orbit requirements. The frequency of orbit adjusts is TBD. Each maneuver is planned and scheduled in advance of execution. Orbit maintenance maneuvers are not enabled without providing an opportunity for appropriate instrument reconfiguration, except in Spacecraft emergency situations. The Propulsion Subsystem provides impulse for orbit maintenance.

The Spacecraft is monitored by the Flight Dynamics Facility (FDF) through TDRSS ranging, and by the EOC, which uses TDRSS Onboard Navigation System (TONS) determinations. When required, orbital adjust calculations are performed to determine the direction and length of the burn, and the required start time. These calculations are used to generate stored commands. Upon completion of the burn, Spacecraft orbital parameters are monitored to determine the need for further correction. Figure 18 summarizes the steps described in paragraph 4.1.8

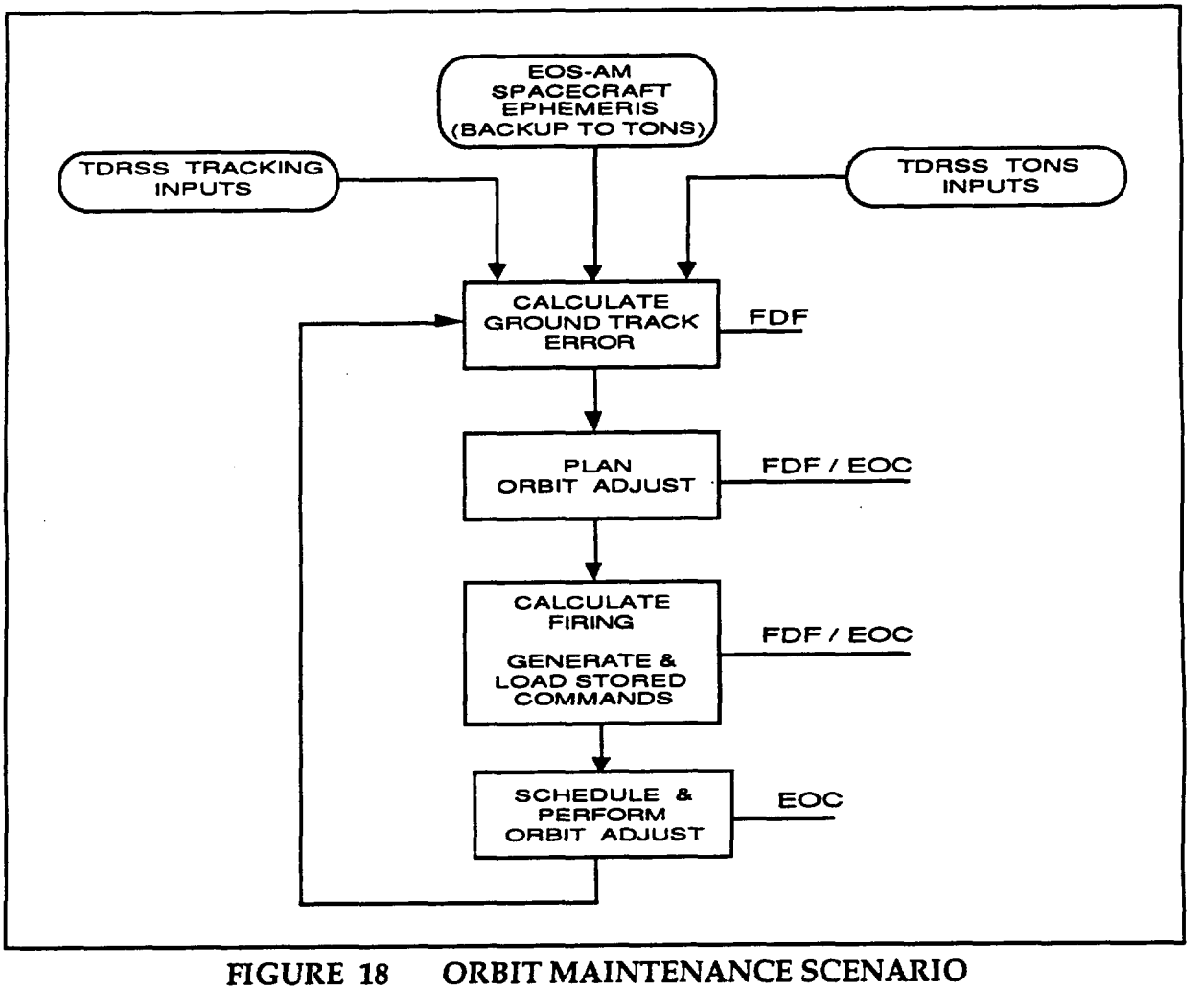

FIGURE 18 ORBIT MAINTENANCE SCENARIO

4.1.9 Autonomous Operations

The Spacecraft Fault Detection, Isolation and Recovery (FDIR) System protects the Spacecraft Bus and instruments in the event of survival-critical failures that occur in the absence of ground command and control. To accomplish this, the FDIR system autonomously switches the Spacecraft's configuration (equipment configuration and operating mode) in response to predefined survival-critical faults to isolate faults and prevent propagation. The FDIR system resides mostly in the SCC. This system provides autonomous action only if the fault detected is time critical to Spacecraft survival.

The major Spacecraft functions assessed by the on-board FDIR system requires a Flight Operations Team response in the event of function loss. The Flight Operations Team takes predefined actions in the event a FDIR event is detected.

The Spacecraft Safe Mode or Survival Mode is entered only after unsafe conditions or pending unsafe conditions are detected by the Flight Operations Team or the Spacecraft on-board FDIR system.

The Spacecraft may autonomously transfer into Safe Mode which may involve a degraded Spacecraft operation, and may also involve interruption of stored-command execution (only in the case of SCC or CTIU/C&T Bus loss).

Safe Mode or Survival Mode recovery occurs in predefined ground command / control steps only after detailed analysis and Spacecraft subsystems checkout and Operational Readiness verification.

4.1.10 Spacecraft Bus Operating Modes

The Spacecraft Bus operating modes are defined by the minimum functional and performance capabilities that are required to satisfy mission conditions and constraints.

Transition between a primary mode and a back-up mode is initiated by either Ground Command (stored or real-time) or on-board FDIR logic. The on-board Spacecraft Bus computer [SCC] autonomously initiates a transition from a primary mode (ie; Science Mode) to a back-up mode (ie; Survival Mode) following violation of preselected FDIR criteria. Exit from a back-up mode to a functionally more capable mode is by ground command only.

Figure 19 shows the Spacecraft operating modes available during each mission phase and their status (primary availability or back-up availability).

SPACECRAFT SYSTEM MODES	EOS-AM1 SPACECRAFT MISSION PHASES						
	Pre-Launch	Launch / Ascent	Orbit Acquisition Initialization	Orbit Acquisition	Operational Initialization	Operational	End of Mission
Ground Test Mode	P	B					
Launch/Ascent Mode		P	P				
Standby Mode			P	P	P	B	
Science Mode					P	P	
Delta-V Mode				P	P	P	
Survival Mode		B	B	B	B	B	P
Safe Mode		B	B	B	B	B	B

LEGEND
P = PRIMARY MODE
B = BACKUP MODE

FIGURE 19 SPACECRAFT OPERATING MODES AVAILABILITY

The Spacecraft Bus system operating modes are:

a. **Ground Test Mode.** -- The Ground Test Mode is a non-flight mode, used by the Launch Operations Team, in the Pre-Launch Phase following Spacecraft to Launch Vehicle integration. During the Ground Test Mode, the Spacecraft Bus undergoes comprehensive performance testing. Instrument science will not be tested during this mode but the integrity of instrument interfaces are verified. No deployments will be performed during the pre-launch tests.

   The Spacecraft is essentially in a check-out state receiving power from the Launch Vehicle T - minus zero umbilical, at the launch pad. The Spacecraft readiness for launch is established. The batteries are charged and equipment powered, as required, for low rate telemetry and commanding. Telemetry is provided to the Ground Support Equipment via the T - minus zero umbilical Spacecraft 1 kbps health and safety telemetry will be multiplexed with the Launch Vehicle telemetry and made available via the Launch Vehicle telemetry and antenna systems after Spacecraft disconnect from the T - minus zero umbilical. The software and data tables are loaded with the appropriate parameters for Orbit Acquisition Initialization and Orbit Acquisition Phase activities.

   The Ground Test Mode is entered by ground command. The Ground Test Mode is exited into the Launch/Ascent Mode for the Launch Phase upon the Spacecraft going to internal power.

b. **Launch/Ascent Mode** -- The Launch/Ascent Mode is a primary mode in both the Launch/Ascent and Orbit Acquisition Initialization Phases. The instruments are powered off with survival heaters enabled. Housekeeping equipment is powered as required for low-rate commanding and telemetry, with survival and operational heaters enabled.

The Flight Operations Team will monitor the Spacecraft telemetry received via the launch vehicle when it becomes available. No direct Flight Operations Team command/control involvement is necessary during the Launch and Ascent, assuming nominal Spacecraft conditions and activities.

Upon detection of separation from the launch vehicle, preprogrammed logic will be activated to perform major early mission activities, including:

- An attitude maneuver to obtain an Earth-oriented attitude
- Deployment of the solar array to support the bus load and begin battery recharge
- Establishment of an S–band command/telemetry link, primarily with TDRS via the omnis
- Deployment of the High Gain Antenna
- Enable the FDIR algorithms necessary for autonomous transition to Survival Mode or Safe Mode in the event of predefined failures. These algorithms will remain enabled throughout the subsequent mission phases.

Launch/Ascent preprogrammed activities will, as a backup, accept real-time ground commanded initiation, provided that a communication link with the ground has been established.

Nominally, exit from the Launch/Ascent Mode to Standby Mode will be ground commanded when the major early mission events (e.g. earth acquisition, energy balance, High Gain Antenna deployment) have been successfully completed. If an anomaly occurs after the Spacecraft has separated from the launch vehicle, the transition from the Launch/Ascent Mode to either the Survival Mode or Safe Mode may be commanded either by autonomous on-board logic or by ground command.

c. **Standby Mode** -- Standby Mode is used during Spacecraft subsystem checkout or as a back-up to the Science Mode. Although instrument science is not supported in this mode, instrument housekeeping functions can remain operational. Services provided during the Standby Mode include:

- Full power is provided. The Spacecraft Bus maintains a positive energy balance. The Spacecraft solar array tracks the sun.
- Thermal control is provided.
- Nominal S-Band Spacecraft Bus and instrument housekeeping (16 Kb) / health and safety (1 Kb) telemetry are provided.
- Commands are processed and distributed.
- Spacecraft housekeeping, health, and safety data storage and retrieval are operational.
- The SCC is operational.
- The Spacecraft Guidance and Navigation functions operate nominally, providing Earth-pointing (precision, if transition is from the Science Mode). The TONS system is operational with the Spacecraft ephemeris loaded as back-up.

d. **Science Mode** -- The Science Mode is the primary mode used during the Operational mission phase and during on-orbit instrument checkout. During Science Mode the Spacecraft Bus provides the full complement of resources. Services provided during the Science Mode include:

- Full power is provided. The spacecraft Bus maintains a positive energy balance. The solar array tracks the sun.
- S-Band Spacecraft Bus and instrument housekeeping / health and safety telemetry are provided.
- Science data transmission (real-time or playback) capability on the K-Band and Direct Access System are provided.
- Ancillary data and time-tagged navigational data functions are provided.
- Commands are processed and distributed.
- Spacecraft high rate and low rate data storage and retrieval are operational.
- The SCC is operational including High Gain Antenna pointing and control.

- The Spacecraft Guidance and Navigation functions operate nominally, providing precision Earth-pointing. The TONS system is operational with the Spacecraft ephemeris loaded as back-up.

e. **Delta-V Mode** -- The Delta-V Mode is a propulsive mode used to raise Spacecraft altitude from the injection orbit to mission operational altitude, circularize the mission orbit and to provide periodic correction to maintain the mission orbit. At a minimum, in the Delta-V Mode, the Spacecraft can be at survival power levels, and at a maximum, the Spacecraft can be at full power.

Best case: (such as planned Delta-V during the Operational Phase)

- Full power is provided.
- The spacecraft Bus maintains a positive energy balance.
- The solar array tracks the sun with nominal rotation.
- Science data transmission (real-time or playback) capability on the K-Band and Direct Access System could be provided; however, fine pointing and jitter control are not supported.
- Ancillary data and time-tagged navigational data functions are provided.
- Spacecraft high rate data storage and retrieval could be operational.

Worst case: (such as during the Orbit Acquisition Phase)

- Survival power (degraded capability).
- Commands are processed and distributed.
- S-Band Spacecraft Bus and instrument housekeeping / health and safety telemetry are provided.
- Spacecraft low rate data storage and retrieval are operational.
- The SCC is operational.
- The Spacecraft Guidance and Navigation functions operate providing Earth-pointing; however, fine pointing and jitter control are not supported. The TONS system is operational with the Spacecraft ephemeris loaded as back-up.

f. **Survival Mode** -- The Survival Mode is a minimal power or power critical mode in which only essential Spacecraft functions (i.e., low-rate commanding and telemetry, instrument survival heaters) are supported. Transition into the Survival Mode causes non-essential housekeeping equipment to power-down.

Instruments are commanded to take action to protect themselves and establish a minimal power configuration. The Survival Mode is the primary mode for the Launch/Ascent, Orbit Acquisition Initialization, Orbit Acquisition, and End of Mission Phases. Services provided during the Survival Mode include:

- The solar array tracks the sun.
- Commands are processed and distributed.
- S-Band Spacecraft Bus and instrument housekeeping / health and safety telemetry are provided.
- Spacecraft critical health and safety data storage and retrieval are operational.
- The SCC is operational. (Best case)
- The Spacecraft Guidance and Navigation functions operate nominally, providing Earth-pointing,(best case; Sun pointing worst case. The TONS system is operational with the Spacecraft ephemeris loaded as back-up.

g. **Safe Mode** -- The Safe Mode is a state in which the Spacecraft Bus is capable of operating partially or completely independent of the SCC. Specifically, the Spacecraft Bus operates in the Safe Mode as long as the Attitude Control Electronics (ACE) performs the attitude control functions.

Safe Mode can be entered via ground command by the Flight Operations Team. Safe Mode is entered autonomously under two circumstances. The first is the loss of SCC - I'm OK - signal and the second is due to GN&C FDIR action. Autonomous Spacecraft entrance into the Safe Mode due to GN&C FDIR occurs if the GN&C FDIR detects an attitude error beyond a given threshold and attitude control is switched to the ACE. Services provided during the Safe Mode include:

Best case:

- Full power is provided The spacecraft Bus maintains a positive energy balance. The solar array tracks the sun with nominal rotation.

- Commands are processed and distributed.
- S-Band Spacecraft Bus and instrument housekeeping / health and safety telemetry are provided.
- Science data transmission (real-time or playback) capability on the K-Band and Direct Access System is provided.
- Ancillary data and time-tagged navigational data functions are provided.
- Spacecraft low rate and high rate data storage and retrieval are operational.
- The SCC is operational.
- The Spacecraft Guidance and Navigation functions operate safely Earth pointing with degraded pointing accuracy. The TONS system is operational with the Spacecraft ephemeris loaded as back-up.
- Earth Pointing

Worst case:

- Power for survival equipment and instruments
- No command / telemetry until the FOT re-establishes these functions [Command and Telemetry Interface Unit (CTIU) failure scenario].
- SCC non-functional. No SCC services.
- Sun pointing
- Thruster based attitude control

4.1.11 Spacecraft Bus - Instrument Operating Modes Relationships

The Spacecraft Bus operating modes and MODIS operating modes are directly interrelated. The Spacecraft Bus provides predefined services and resources for each of its operating modes. MODIS operates to predefined tasks for each of its operating modes.

Table IV relates MODIS operating modes and the Spacecraft Bus operating modes.

TABLE IV
SPACECRAFT BUS AND MODIS OPERATING MODES

SPACECRAFT SYSTEM MODE	MODIS INSTRUMENT MODE					
	Launch	Survival	Safe	Standby	Outgas	Science
Ground Test	X					
Launch/Ascent	X					
Standby				X		
Science		X	X	X	X	X
Delta-V				X		
Survival		X				
Safe			X			

LEGEND

X = Normal Configuration

4.2 Ground System

The EOS ground system provides the earth sciences community with a variety of data products obtained from the Earth Observing System spacecrafts. Data archiving, distribution and user interface capabilities are provided. The ground system also supports the command and control of the EOS-AM Spacecraft.

EOS-AM flight operations utilizes several NASA institutional support facilities along with dedicated EOS facilities. These include the following:

4.2.1 Space Network

The Space Network (SN) is the primary data transport system for relaying data between the EOS-AM Spacecraft and the ground, and provides communication resource scheduling support to EOSDIS. The SN elements together provide the communications path between the Spacecraft communications subsystem and the EOS Data and Operations System (EDOS). The SN has two parts:

a. **The Tracking and Data Relay Satellite System (TDRSS).** TDRSS comprises the Tracking and Data Relay Satellites [TDRS(s)], the White Sands Ground Terminal (WSGT), and the Second TDRS Ground Terminal (STGT), also located at White Sands.

b. **The Network Control Center (NCC) at the Goddard Space Flight Center (GSFC).** The NCC is the operations center for all SN activities. It provides operational management of all elements of the SN and is responsible for all scheduling activities for the TDRS(s) and ground terminals. The EOC interfaces with NCC for scheduling SN resources. The NCC implements operations, executes schedules, and performs link monitoring and fault isolation.

Figure 20 depicts a top level view of the Space Network scheduling process.

The nominal plan for TDRSS support calls for two contacts 10 minutes in length, per EOS-AM orbit. The requirement for support is submitted with the specific timing of support services left to be scheduled by the NCC. A forecast schedule of TDRSS support intervals is released by the NCC approximately one-two weeks beforehand. Contingency/emergency support arrangements can be made with 10 minutes advance notice.

Figure 21 shows a timeline of Space Network and EOC scheduling activities during a normal forecast scheduling period and an active scheduling period.

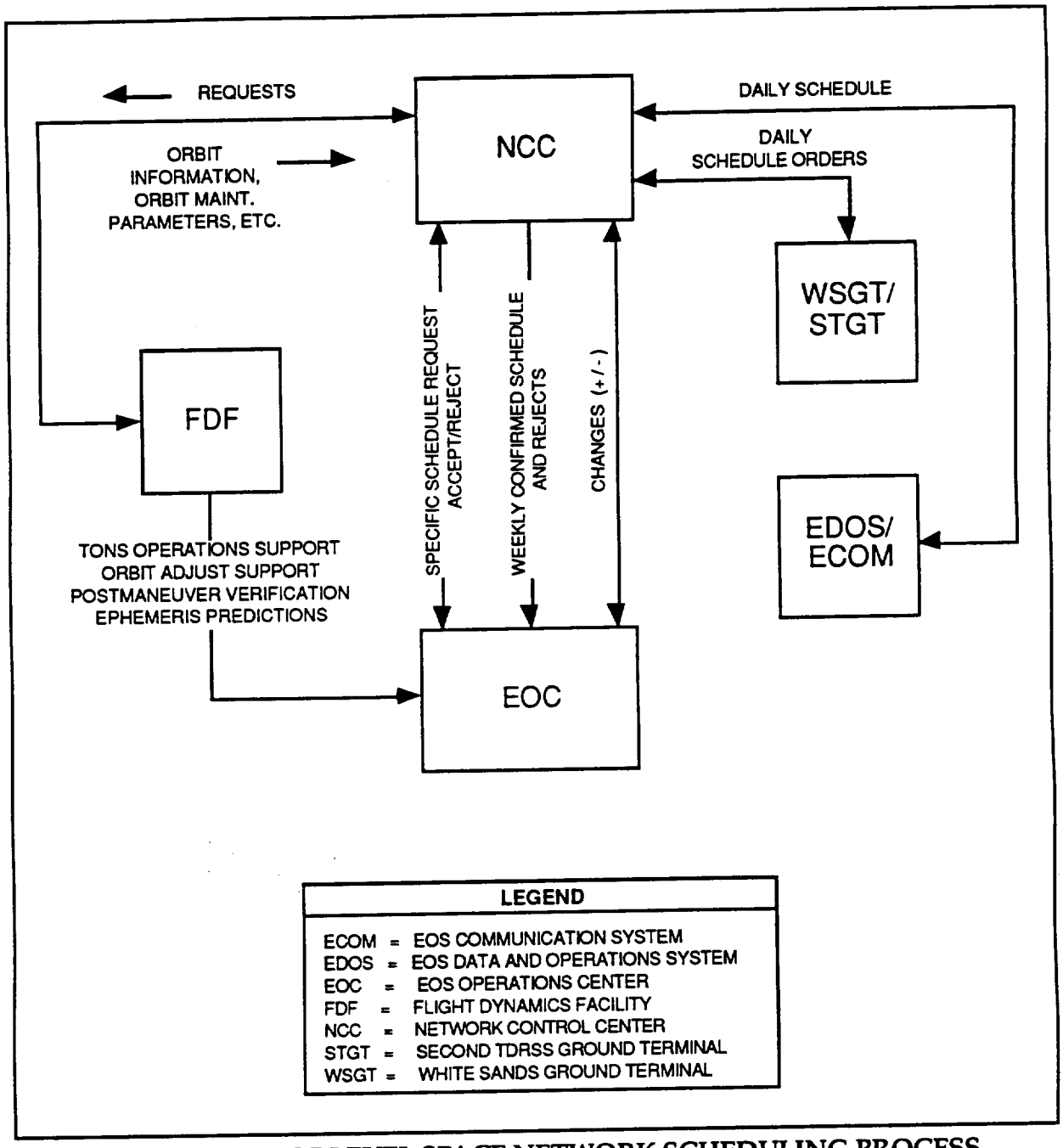

FIGURE 20 TOP LEVEL SPACE NETWORK SCHEDULING PROCESS

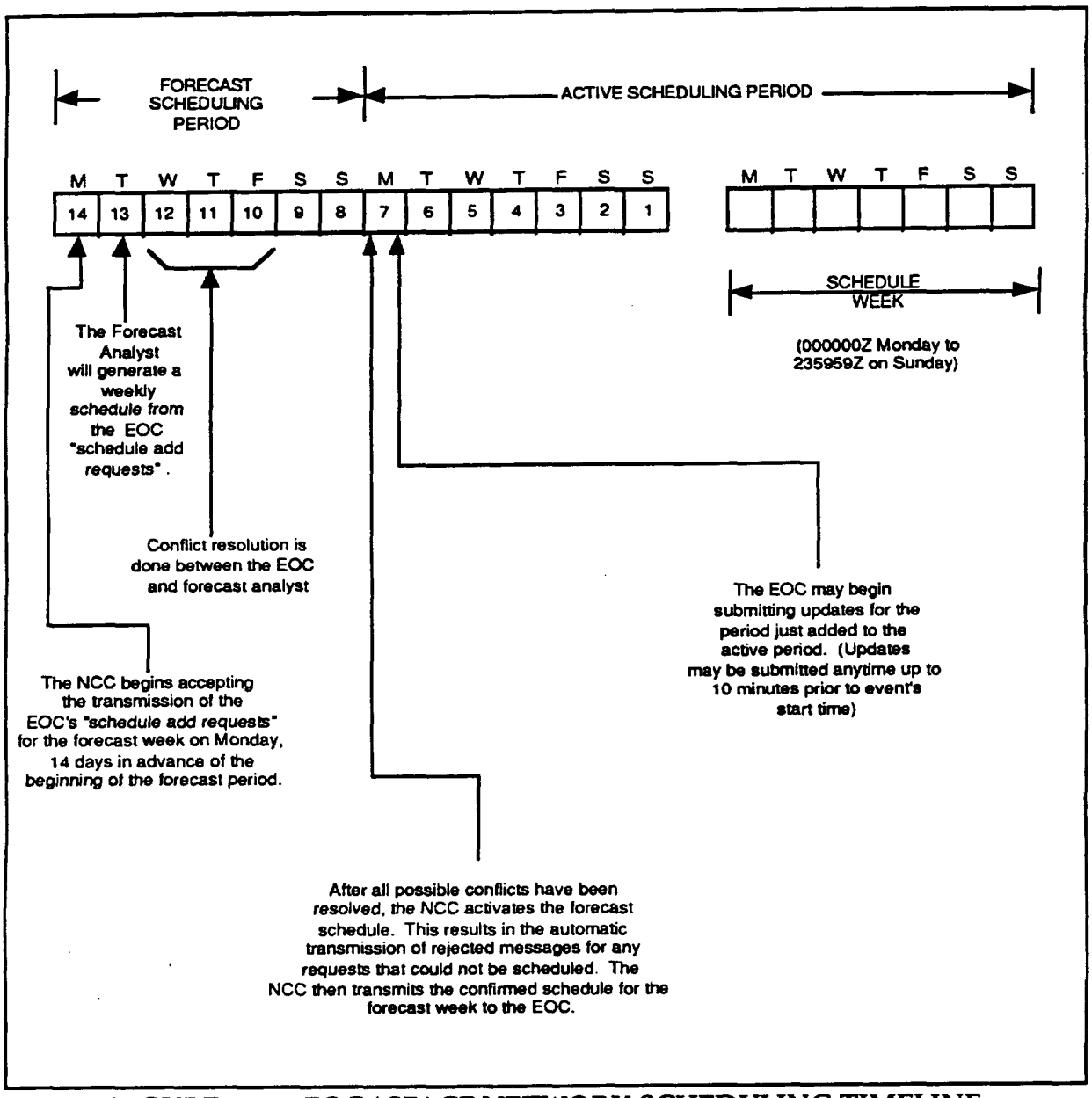

FIGURE 21 EOC / SPACE NETWORK SCHEDULING TIMELINE

4.2.2 Flight Dynamics Facility

The Flight Dynamics Facility (FDF) is an institutional facility located at GSFC that provides orbit, attitude, and navigation computational services in support of flight projects. Prelaunch services include mission design analysis, trajectory analysis, sensor analysis, and operations planning. Operational support services include orbit and attitude determination, anomaly resolution, orbit adjustment planning and maneuver support, sensor calibration, post mission velocity analysis, and generation of planning and scheduling data products.

The FDF provides operational support to the EOS-AM Spacecraft. The FDF interacts directly with the EOC to provide TONS operations support, orbit adjustment support, and post maneuver verification of spacecraft parameters. In addition, FDF provides the EOC with TDRS and EOS-AM Spacecraft ephemeris loads and predictions for planning and scheduling support.

The FDF routinely provides predicted orbit information for use in flight operations and definitive data for scientific data processing (when requested). The FDF generates planning aid data to support both long and short term operational planning activities and for use in command generation processing. Performance monitoring data is extracted from planning aid data sets, or generated separately; this data is provided to the EOC for use in verifying proper Spacecraft operation during real-time contact intervals. The FDF operates seven days per week to generate predictive orbit data for use in daily command generation processing. The short-term planning aid data used in daily planning activities is generated/updated TBD, while long term planning aid generation is scheduled to support specific long term planning activities whenever they occur.

4.2.3 NASA Communication Network

Together with the EOS Communications Network (ECOM) (Section 4.2.6.2), NASA Communication Network (NASCOM) provides the set of circuits, switching, and terminal facilities for operational telecommunications support of the EOS project. Both networks provide a high level of security for the command, telemetry, and other information directly related to the spacecraft operations that they support. NASCOM provides the communications between the Earth Science Data Information System (ESDIS) and the NCC (and possibly other institutional systems), either directly or via ECOM gateways.

4.2.4 Science Support Networks

Other NASA networks that support EOS science communications include the Program Support Communications Network (PSCN) and the NASA Science Internet (NSI):

a. The PSCN provides programmatic and administrative data communication services between NASA Headquarters, NASA centers, and other users. The PSCN Control Center, located at Marshall Space Flight Center (MSFC), has overall responsibility for scheduling, software development, maintenance, and monitoring of the PSCN.

b. The NSI is a multi-discipline and multi-project network that is operated by the NSI Project Office at NASA's Ames Research Center (ARC). NSI provides data access and interchange among a wide variety of NASA science

disciplines. It provides direct user access to several disciplines supported by ESDIS and gateways to other networks that will be part of the ESDIS Science Network (ESN).

4.2.5 Alternate Space/Ground Links

In the event that the Spacecraft is unable to communicate through TDRSS, NASA ground stations link the Spacecraft with the EOC for housekeeping and health and safety data. The ground stations include the following:

a. Deep Space Network (DSN).
b. Ground Network (GN).
c. Wallops Orbital Tracking Station (WOTS).

4.2.6 Earth Observing System Data and Information System

The Earth Observing System Data and Information System (EOSDIS) ground system consists of EDOS, ECOM, and ECS.

4.2.6.1 EOS Data and Operations System

The EOS Data and Operations System (EDOS) is a component of the EOS Ground System which provides an interface between the White Sands Ground Terminals and other EOS Ground Systems like the EOC, ASTER Instrument Control Center (ICC), and the DAACs. The interface between EDOS and the DSN, GN, WOTS, and Direct Playback stations is TBD.

EDOS processes data which conforms to the CCSDS recommendations.

For telecommand services, EDOS provides an asynchronous interface with the EOC, while providing a synchronous interface with the White Sands Ground Terminal. EDOS receives CCSDS Command Link Transmission Units (CLTUs) from the EOC and provides the CCSDS protocol for transmission of the data to the White Sands Ground Terminals.

For telemetry services, EDOS provides several data processing functions:

a) For data requiring real-time transmission (i.e., real-time housekeeping data to the EOC), EDOS extracts packets from the S-band downlink and transmits the packets with a minimum of delay at the rate received. In addition, EDOS provides a time tagging function which will allow for accurate spacecraft time determination.

b) EOS-AM data transmitted via the high-rate science link (i.e., the K-band link), undergoes level zero production data processing at EDOS. Playback data is forward ordered if necessary, and data sets are generated which contain time ordered packets (all with the same APID) with quality and accounting information appended. The size of the data sets generated is predetermined, so one data set may contain data from one or more TDRSS contacts. Overlap between TDRSS contacts is eliminated where it occurs.

   Level zero processed data sets are available for delivery to destinations within 21 hours of receipt of all the required data.

c) Up to 5% of the total data generated by the spacecraft may receive quick-look processing at EDOS. Quick-look processing is a means of delivering science/engineering data to a destination within approximately one hour of its receipt at EDOS. Any data included in a quick-look processed data set is also included in a routine level zero production processed data set. Quick-look processed data sets are limited to data received during a single TDRSS contact. The data in a quick-look processed data set may include all of the data associated with the specified APID received during the TDRSS session or only those packets for the specified APID that have a special secondary header flag set (quick look flag).

d) Another EDOS processing option is rate buffering. This option is intended to capture downlink data at a high data rate and deliver that data to a destination at a different, lower data rate with minimal processing delays.

   Rate buffered data sets are files of packets for a single APID with limited quality and accounting information appended.

EDOS provides an interface to the EOC, ICC, and DAACs for realtime spacecraft monitoring, data accounting, fault isolation, and configuration management.

4.2.6.2 EOS Communication Network

The EOS Communication Network (ECOM) is a facility system that supplies supporting services to EOSDIS. ECOM provides the set of circuits, switching, and terminal facilities for operational telecommunications support specific to the EOS project. Together with NASCOM, ECOM provides a high level of security for the command, telemetry, and other information directly related to the Spacecraft operations. ECOM provides the data transport path from the EDOS elements to various other elements of EOSDIS, including the EOC and ASTER ICC. ECOM supports a variety of bandwidths and uses state-of-the art communications methods, including fiber optics and domestic communications satellites.

4.2.6.3 EOSDIS Core System

The EOSDIS Core System (ECS) has the following three segments:

a. The Flight Operations Segment.
b. The Science Data Processing Segment.
c. The Communication and System Management Segment.

4.2.6.3.1 Flight Operations Segment

The Flight Operations Segment (FOS) manages and controls the EOS-AM Spacecraft and its instruments.

The FOS comprises the following three basic elements:

a. **The EOS Operations Center**

The EOS Operations Center (EOC) facility serves as the focal point for EOS-AM Spacecraft real-time flight operations. The EOC will be located at GSFC. Figure 22 shows the EOC staffing structure and relationships with other EOS-AM Project related entities.

The flight operations elements responsible for the health and safety of the Spacecraft are located at the EOC. The FOT performs the detailed flight operations planning and scheduling, command, control, and real-time monitoring of the Spacecraft. The spacecraft engineering group, located at the EOC, is responsible for detailed Spacecraft performance analysis and produces periodic spacecraft subsystem performance reports.

Housekeeping, engineering, and instrument quick-look processed science data are also analyzed to support flight operations and to support Spacecraft and instrument engineering.

The FOT coordinates MODIS operations with the Spacecraft and other instruments. Working with the MODIS PI via the Instrument Support Terminal(s), the FOT plans and schedules the MODIS and Spacecraft operations.

The EOS-AM spacecraft contractor provides a spacecraft simulator, which is a hybrid of the Spacecraft Bus Command and Data Handling (C&DH) subsystem and special simulation software. This simulator supports ground tests and training. The simulator will be located at the EOC.

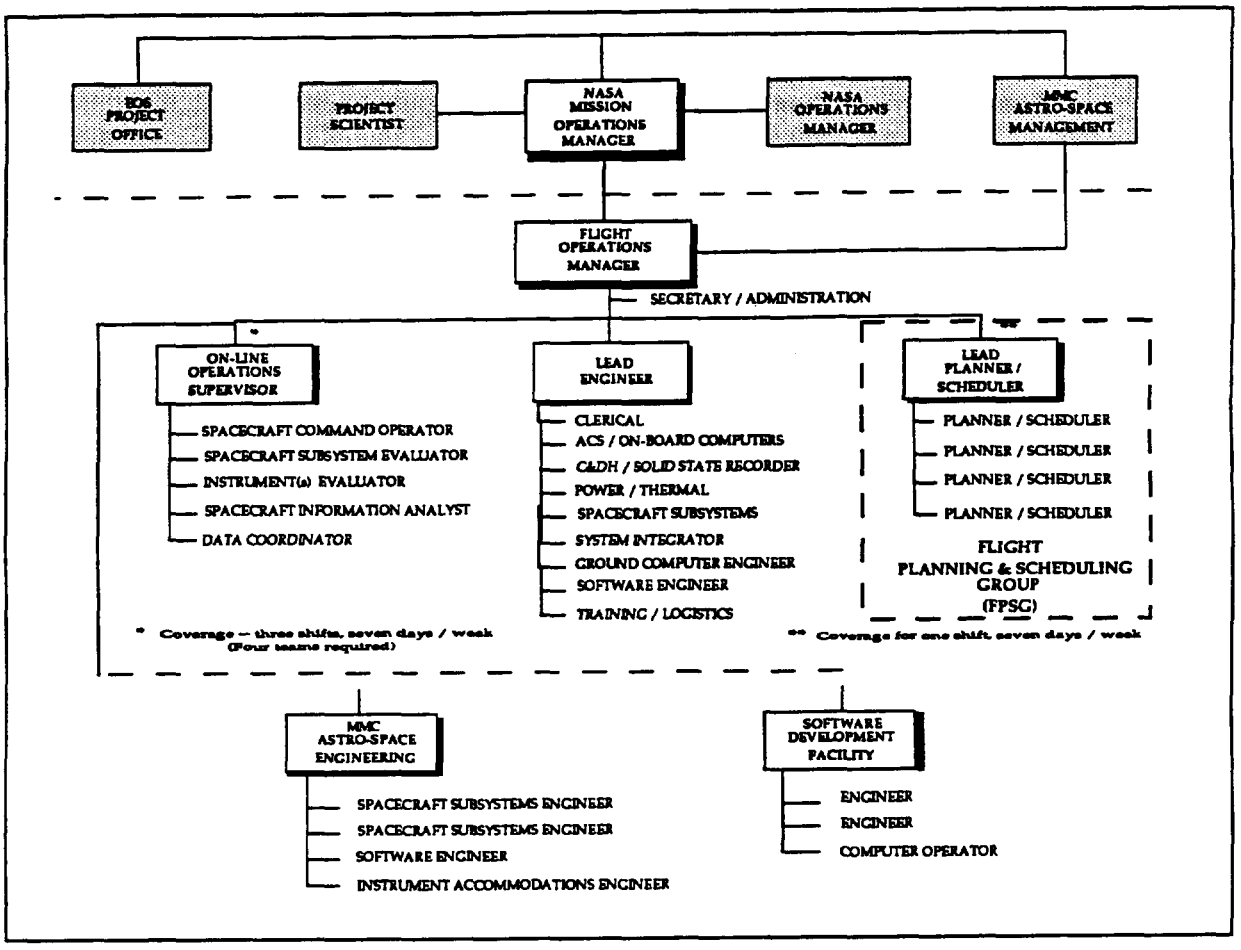

FIGURE 22 EOC STAFFING STRUCTURE

Specific EOC command and telemetry database requirements for the MODIS instrument are defined in Appendix II and Appendix III, respectively.

Specific requirements for EOC computer processing of MODIS telemetry data are defined in Appendix III.

Specific requirements for MODIS uplink transmissions are defined in Appendix II, while MODIS uplink verification requirements are included within Appendix III.

b. The Instrument Control Center

There is no Instrument Control Center (ICC) for MODIS.

c. Instrument Support Terminal

An Instrument Support Terminal (IST) is a software toolkit hosted on the MODIS Principal Investigator (PI) workstation. The MODIS IST workstation provides access to EOC based information and functions. It also provides for the exchange of data between the EOC and other instrument support systems at PI/TL or instrument team locations.

One or more ISTs (TBD) may be available to enable the MODIS PI to participate in the planning, scheduling, commanding, and monitoring of the MODIS instrument. The procedures for these interfaces are TBD and are furnished by the ECS contractor.

Figure 23 shows the MODIS IST user perspective.

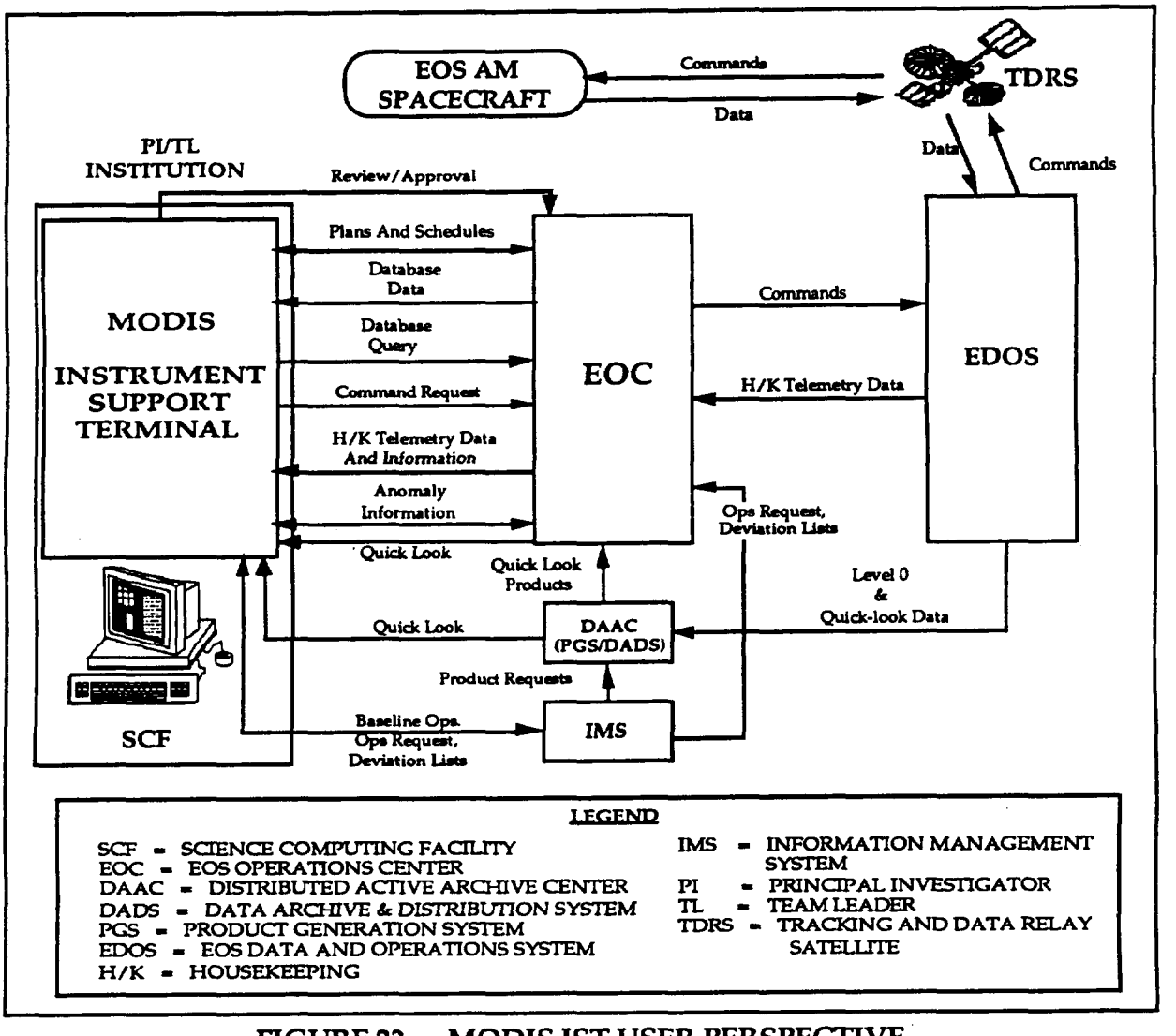

FIGURE 23 MODIS IST USER PERSPECTIVE

The MODIS IST provides for the exchange of data with the EOC. Other instrument support systems at the MODIS PI location (e.g., for transfer of instrument microprocessor loads and dumps) also utilize the IST. Different authorized individuals may use the IST to perform different functions in support of MODIS operations (e.g., some IST users may support planning and scheduling; others, anomaly resolution).

During the ECS development phase, the PI and the Earth Science Data

Information System (ESDIS) project will negotiate the allocation of instrument operations functions to the MODIS IST.

The ISTs run on a wide range of computer platforms that conform to industry standards. The MODIS PI is responsible for ensuring that the hardware that hosts the IST meets these standards and for integrating the toolkit with the hardware and other PI applications.

4.2.6.3.2 Science Data Processing Segment

The Science Data Processing Segment (SDPS) provides processing and distribution for science data and a data information system for EOSDIS. It consists of the following three kinds of elements:

a. The Distributed Active Archive Centers (DAACs) -- The DAACs will process data from the instruments to standard level 1-4 products, provide short- and long-term storage for EOS and selected non-EOS data, and distribute the data to users. Each is composed of a Product Generation System (PGS), a Data Archive and Distribution System (DADS), and a portion of the distributed Information Management System. Several DAACs are distributed around the United States.

b. The Information Management System (IMS) -- The IMS is a distributed data and information management service that includes a catalog system in support of user data selection and ordering. The IMS is distributed but will function as a single integrated information and data management service from the point of view of the user. The IMS therefore presents the same comprehensive view of the EOSDIS from any IMS access node.

c. The Science Computing Facilities (SCFs) -- SCFs are located at science investigator sites and are used to develop and maintain algorithms, produce data sets, validate data and data products, and analyze and synthesize EOS and other data to expand knowledge about the Earth system and its components.

The SDPS performs the EOSDIS functions of processing and archiving data from the EOS instruments and data from other earth science projects.

4.2.6.3.3 Communication and System Management Segment

The Communication and System Management Segment (CSMS) provides communications, networking, system-wide network management, and site/element operations management. This segment contains the following two elements:

a. The System Management Center (SMC) -- A system management service for EOSDIS ground system resources.

b. The EOSDIS Science Network (ESN) -- A communications network and services providing for the electronic distribution of data among the DAACs, SCFs, and other related science facilities.

The CSMS performs the EOSDIS functions of providing access to and distribution of EOS data products, networking capabilities, and the exchange of items such as data and algorithms.

5 FUNCTIONAL RESPONSIBILITY ALLOCATIONS

The allocations of responsibility for performing various operational functions in support of MODIS flight operations are understood to be as follows:

5.1 Planning and Scheduling

Planning and scheduling has the objective of producing a detailed schedule for the activities of the EOS-AM Spacecraft (Spacecraft Bus and AM Instrument Set). The Flight Planning and Scheduling Group (FPSG), a segment of the FOT, is responsible for producing the integrated Spacecraft detailed activity schedule.

The planning and scheduling process includes the following three steps:

a. **A long-term mission planning phase.**
Long-term mission planning for the Spacecraft begins up to 5 years before the activities being planned and produces or updates the Long-Term Science Plan (LTSP) and Long-Term Instrument Plans (LTIPs).

b. **An initial scheduling phase.**
Initial scheduling, whose primary objective is to secure the SN resources for flight operations for the target week, begins about 3 weeks before the target week and uses baseline activity profiles, activity lists and/or activity deviation lists.

c. **A final scheduling phase.**
Final scheduling, which begins after the instrument and Spacecraft subsystem activity lists are generated, produces a detailed activity schedule for the Spacecraft Bus and the instruments. This schedule forms a basis for commanding the Spacecraft.

The science community and the FOT will integrate science and Spacecraft information in the planning and scheduling process.

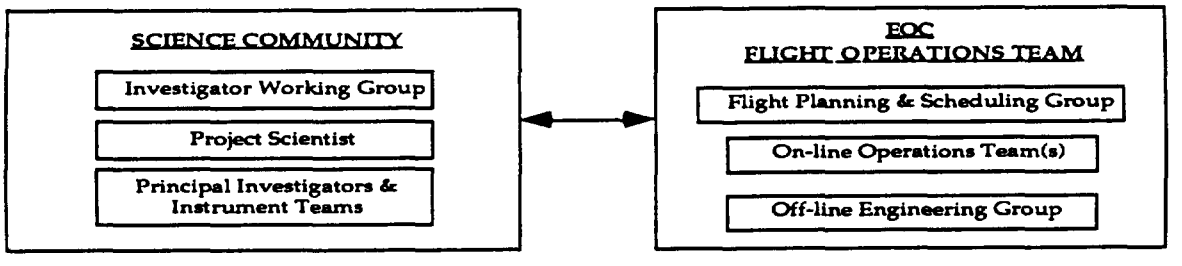

5.1.1 Long Term Planning

The project scientist produces, with the Investigator Working Group (IWG) recommendations, a LTSP for the Spacecraft. The PIs/TLs produce LTIPs for their respective instruments. The FOT uses these long-term plans to develop a long-term Spacecraft operations plan.

The IWG recommends guidelines and overall science objectives to the Project Scientist, who defines policy. The IWG has representatives from each of the instruments. The IWG meets regularly, at least every 6 months (usually every three months). The LTSP presents science objectives for the Spacecraft establishes science mission priorities to be used in later scheduling, and recommends approaches for satisfying scientific objectives. The LTSP also defines special events and specifies requirements for coordination between instruments.

The MODIS PI has responsibility for the MODIS LTIP. The MODIS LTIP also contains planned routine background operations for ongoing observations or operations that are related to routine calibration and maintenance activities.

The FPSG has the responsibility for Spacecraft planning. Some of the Spacecraft Bus subsystem activities that the FPSG manages are directly related to science and to Spacecraft Bus subsystem operations; these include the power, command and data handling, and communications subsystems. Others support Spacecraft maintenance, including battery management and orbit maintenance. The FPSG formulates long-term spacecraft operations plans and keeps the IWG and the MODIS PI informed of changes in Spacecraft operations, including predicted frequencies in which science operations are affected for maintenance.

5.1.2 Initial Scheduling

Initial scheduling has the objectives of securing the required SN resources from the NCC. The FPSG identifies the SN resources required for Spacecraft Bus subsystem operations (e.g., TONS operations, orbit adjustment operations). Based on the baseline activity profiles, instrument activity lists, and activity deviation lists (if any) for the instruments, and the SN resource needs for the Spacecraft Bus subsystems, the EOC estimates on-board Solid State Recorder usage and SN resource needs and develops a TDRSS schedule request. The FPSG sends the schedule request to the NCC and negotiates with the NCC as necessary to secure the best possible SN resource allocations.

On the basis of the TDRSS schedule, the Spacecraft Bus activities required and instrument activities, the FPSG develops a preliminary Spacecraft activity schedule, which it makes available to all instruments. The MODIS PI has access to available scheduling information via the IST. This global information includes the plans

(e.g., LTSP, LTIPs, and long-term Spacecraft operations plan), orbit information (e.g., scheduling aids from the FDF), a TDRSS schedule for the target week, and the most current preliminary Spacecraft activity schedule.

The MODIS PI expresses changes of scheduling needs with operations requests, which contain activity deviation lists, and provides them to the FPSG. The MODIS PI acknowledges the "no change to operating instructions" by the use of TBD provided to the FPSG on a TBD schedule.

The Spacecraft Bus subsystems undergo initial scheduling. From the long-term Spacecraft operations plan, the FPSG identifies the activities that the subsystems must perform during the target week. Based on these activities, the FPSG generates an initial activity profile. The FPSG uses the activity profile to identify the Spacecraft Bus subsystems' SN resource needs.

After validation of the activity profile, the FPSG generates a TDRSS schedule request and sends it to the NCC, about 2 weeks before the target week. For about a week after the submission of this TDRSS schedule request, the FPSG can negotiate with the NCC for the best SN resource allocations. A week before the target week, the NCC provides the active TDRSS schedule to the FPSG. Based on the TDRSS schedule and other resource profiles, the FPSG builds a preliminary Spacecraft activity schedule for the target week.

5.1.3 Daily Planning and Scheduling

The FPSG is responsible for overall coordination of daily Spacecraft operations planning and scheduling activities. The MODIS PI is responsible for reviewing the daily Spacecraft operations plan.

Final scheduling has the objective of producing for the Spacecraft a detailed activity schedule on which commanding will be based. Final scheduling is based on the preliminary activity schedule and any new input that has been accepted since the preliminary activity schedule was developed.

The FPSG combines the activity deviation lists, if any, with the corresponding baseline activity profiles to produce instrument activity lists. The FPSG develops the Spacecraft subsystem activity lists. Based on the instrument and Spacecraft subsystem activity lists the FPSG, using EOC resources, generates a detailed activity schedule for the Spacecraft. The FPSG can normally perform final scheduling without any input from the MODIS IST.

As in initial scheduling, the MODIS PI can access scheduling information using the IST.

Scheduling conflict resolution is TBD.

5.1.4 Planning Aids

Planning aids which pertain to long-term and daily flight planning activities are generated by the EOSDIS and FDF, and are available to the MODIS PI.

The planning aid access details are TBD and are the responsibility of the EOSDIS Core Systems contractor.

5.2 Uplink Generation

The uplink generation process translates the Spacecraft detailed activity schedule, instrument microprocessor loads, and other information to be stored into Spacecraft command loads ready for uplink transmission. This process will be performed using TBD procedures. The MODIS PI is responsible for generating all MODIS control sequences which are used to implement planned instrument operations. The FPSG is responsible for generating control sequences which are used to implement planned Spacecraft Bus operations. The MODIS PI is responsible for ensuring that the MODIS commands in the command database are current and correct.

The MODIS PI is responsible for defining MODIS constraint checks, constraint violation resolution ground rules, and for performing checks on MODIS microprocessor load sequences. Specific constraint check requirements for MODIS are defined in Appendix II.

The FPSG is responsible for coordinating the processing of Spacecraft and instrument operating schedules into uplink loads. The primary point of contact between the MODIS PI and the Flight Operations Team is TBD.

Spacecraft commanding (real-time uplink commands, realtime microprocessor loads to the instruments, real-time commands to the SCC, and stored SCC commands) has the purpose of directing the spacecraft and instruments to perform the activities as scheduled or as needed. This function has the following three major activities:

a. Normal commanding, which implements the Spacecraft Bus and instrument activities that have been specified in the Spacecraft detailed activity schedule.

b. Implementation of late changes to the scheduled course of activities as necessitated by late changes to the Spacecraft detailed activity schedule.

c. Emergency/contingency commanding required for safe operations of the Spacecraft Bus and instruments.

Command associated activities also involve command data validation, command verification, onboard memory management, and command history maintenance.

Stored SCC commands generated for MODIS are typically composed of absolute time commands. An absolute time command has associated with it a well-defined execution time.

The assignment of command related responsibilities for MODIS to the PI and the FOT are TBD. The FOT uplinks commands for MODIS as specified by TBD approved plans and activities.

The FOT is responsible for uplinking scheduled MODIS command loads. The PI may also request the FOT to initiate real-time commands. The FOT is responsible for generating, validating, deconflicting, and maintaining the command data for the Spacecraft Bus subsystems. The SCC software is the responsibility of the Spacecraft Bus contractor. The FDF provides the FPSG with required parameters for TONS operations and orbit adjustment operations. The FPSG incorporates the appropriate parameters into SCC-stored commands and SCC-stored Spacecraft tables.

5.3 Real-Time Operations

The Flight Operations Team is responsible for all aspects of real-time contact with the Spacecraft. The ECS contractor, using EOC resources, is responsible for processing real-time telemetry data to:

a. Determine the status of various Spacecraft systems.
b. Monitor the health and safety of Spacecraft Bus subsystems and each EOS AM instrument.
c. Generate displays for use by the FOT.

The EOSDIS Core System contractor is responsible for IST display generation. The method and implementation are TBD.

The FOT is also responsible for generating and transmitting all real-time commands, for transmitting the stored command loads, and for verifying all uplink transmissions. Specific uplink verification requirements for MODIS are defined in Appendix III.

The FOT is responsible for implementing the daily Spacecraft operations schedule under normal circumstances, and for taking appropriate action to preserve Spacecraft health and safety. The MODIS PI is responsible for defining health and safety monitoring and reaction procedures for MODIS, and the Flight Operations Team is responsible for implementing these procedures. Specific MODIS health and safety monitoring and action requirements are defined in Appendix III and Appendix IV, respectively.

The MODIS PI is also responsible for advising the FOT of any changes in MODIS operating characteristics, capability, or in plans for MODIS utilization which should be factored into any aspect of real-time operations. The FOT is responsible for advising the MODIS PI (directly, or indirectly via the FPSG) of any departure from planned operation of MODIS.

5.4 Performance Verification

Verification of operational performance is required for all Spacecraft Bus subsystems and MODIS in order to maintain an up-to-date knowledge of Spacecraft operating characteristics, capabilities, and limitations. Performance verification results will be used in science data analysis/evaluation and as an input to ongoing science and operational planning activities. The MODIS PI is responsible for verifying all aspects of MODIS instrument performance, and the FOT is responsible for verifying the performance of Spacecraft Bus subsystems throughout the Spacecraft mission. The SDF at the Spacecraft contractor's facility supports the FOT in verifying Spacecraft Bus flight software performance relating to on-board operation. The MODIS PI is responsible for MODIS performance verification requirements. The FOT and MODIS PI are both responsible for advising the EOS-AM Science Team all/any performance verification results which are pertinent to the planning of future mission operations.

The FOT is responsible for maintaining a log of all uplink activities, which includes for each uplink activity the command data uplinked, the start and end times, and its receipt by the C&DH. The FOT, using EOC resources, also maintains information on whether stored command data are correctly stored in the SCC memory and information on whether the SCC-stored commands are dispatched successfully to the intended destination entities. For real-time commands, the FOT maintains information regarding command execution by the Spacecraft Bus subsystems. The FOT will verify MODIS microprocessor loads via checksum or TBD method.

Similarly, the MODIS PI is responsible for maintaining information on whether the stored or real-time instrument commands are successfully executed by MODIS (Details are TBD). The MODIS PI is also responsible for maintaining information on whether the instrument microprocessor loads are correctly loaded and executed (Details are TBD).

Command histories are maintained by the FOT and MODIS PI.

5.5 Database and Software Maintenance

The Spacecraft SCC and MODIS instrument microprocessor will contain software and database information which are subject to in-orbit maintenance. The EOC computer systems contain a database which supports command generation,

telemetry processing operations; and all ground system elements contain software subject to maintenance. The configuration of each software system and database are controlled with update procedures coordinated to maintain consistency between the EOS-AM Spacecraft and ground system and between various ground system facilities.

The FOT has overall responsibility for coordinating software and database maintenance activities to insure system-wide consistency. The Software Development Facility (SDF) has responsibility for the Spacecraft Bus flight software.

The FOT is responsible for defining and verifying variable-parameter modifications for the allocation of command storage memory within the SCC, and for implementing SCC flight software and database modifications. The MODIS PI is responsible for maintaining all MODIS instrument microprocessor software and database contents for MODIS.

The FOT is responsible for maintaining all Spacecraft Bus subsystem parameters within each ground system database and for maintaining the core definitions of all individual commands within the EOC systems. The FOT is also responsible for maintaining the core definition of all downlink telemetry functions within the EOC database for which EOC processing of any type is required. The MODIS PI is responsible for providing to the EOC the parameter values which define all MODIS commands and telemetry functions (e.g., serial magnitude commands having specific bit patterns or variable sub-fields; telemetry functions contained within an instrument-controlled format structure). The MODIS PI is responsible for defining all other ground system database information updates which relate to MODIS (i.e., command sequences, constraints, verification procedures; activity definitions; telemetry calibration data, limit-check threshold levels, derived function definitions, display formats).

The ESDIS Project is responsible for the maintenance of Code 500-supplied ground system software, and the EOSDIS Core System contractor for implementing the associated database modifications. The FOT is required to remain cognizant of database content and status within the EOC. The FOT interacts with the MODIS PI to implement any database updates which are pertinent to MODIS. The ECS contractor provides the database manager software for the EOC database.

5.6 Early Orbit Operations

The early orbit operations responsibility for performing various operational functions in support of MODIS flight operations are understood to be as follows:

5.6.1 Launch - Orbit Acquisition Mission Phases

The MODIS PI is responsible for defining any command sequences, EOC displays, and contingency procedures which should be available during launch through the Orbit Acquisition mission phase operations in order to assure the health and safety of MODIS. Specific MODIS requirements for pre-activation attention are defined in Appendix IV.

The launch vehicle places the Spacecraft in the injection orbit; and the Spacecraft senses separation (Spacecraft from launch vehicle). Data is relayed from the Advanced Range Instrumented Aircraft (ARIA) to the EOS Operations Center. Figure 24 shows the Launch / Ascent phase timeline.

The FOT is responsible for the following activities:

a. Monitor Spacecraft Bus housekeeping telemetry (Launch / Ascent specific display sets).

b. Monitor and verify Spacecraft Bus operating mode.

c. Monitor and verify Spacecraft Bus resources.

d. Verify stored commands execution.

e. Spacecraft scheduling and planning.

During the Orbit Acquisition Initialization phase, a positive Spacecraft energy balance and an S-Band communications link are established. A stable earth-oriented attitude is attained and an onboard orbit estimate is obtained.

The FOT is prepared to take command and control of the Spacecraft and are responsible for the following activities:

a. Monitor Spacecraft Bus housekeeping telemetry (phase specific display sets).

b. Monitor and verify Spacecraft Bus operating mode.

c. Monitor and verify Spacecraft Bus resources.

d. Verify stored commands execution.

e. Verify Earth acquisition.

f. Verify Solar Array deployment and solar tracking.

g. Verify High Gain Antenna deployment.

h. Verify command and control capability.

h. Spacecraft scheduling and planning.

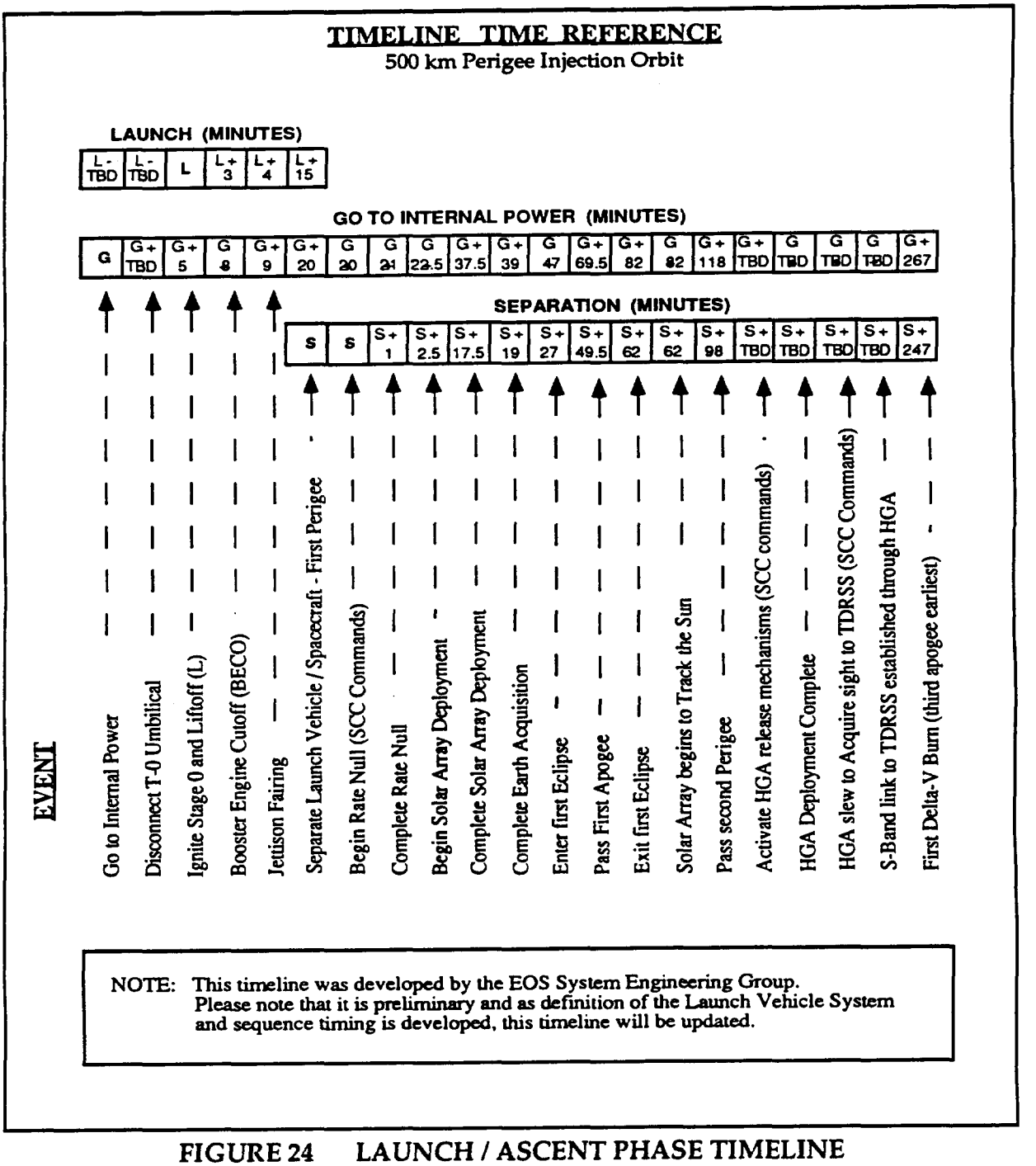

FIGURE 24 LAUNCH / ASCENT PHASE TIMELINE

During the Orbit Acquisition phase, the Spacecraft performs a series of delta-V maneuvers (significant change in velocity vector). The FDF and FPSG are responsible for calculating burn parameters, planning the delta-V maneuvers, calculating the required firings, scheduling, and performing the maneuvers. Figure 25 shows a timeline of the planned maneuvers. Figure 26 shows an activity flow.

The FOT is responsible for the Spacecraft operation and the following activities:

a. Monitor Spacecraft Bus housekeeping telemetry.

b. Monitor and verify Spacecraft Bus operating mode.

c. Monitor and verify Spacecraft Bus resources.

d. Verify stored command execution.

e. Coordinate the FDF Delta-V data inputs to the EOC.

f. Verify on-board Solid State Recorder status.

g. Real-time command and control.

h. Spacecraft scheduling and planning.

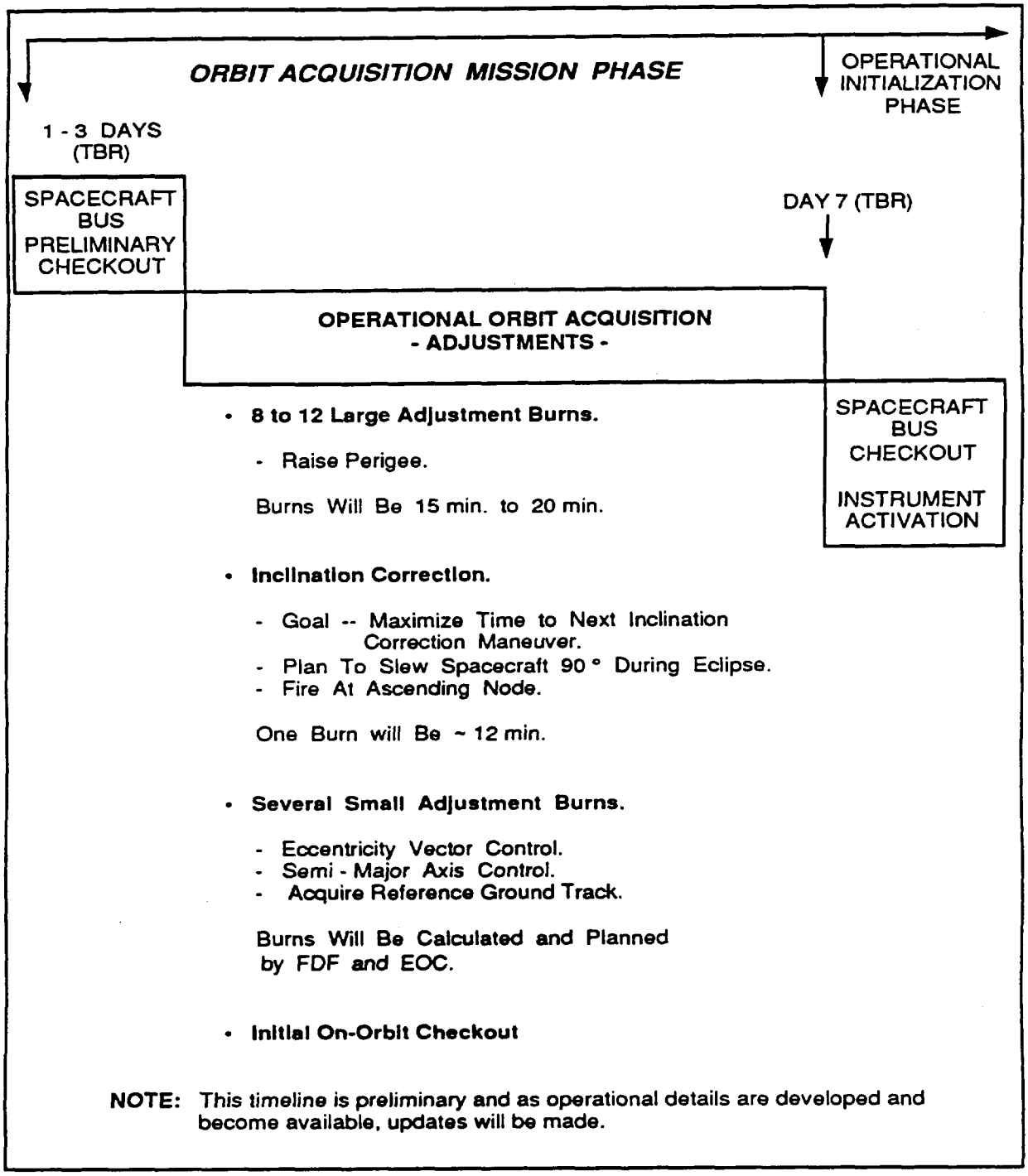

FIGURE 25 ORBIT ACQUISITION MISSION PHASE TIMELINE

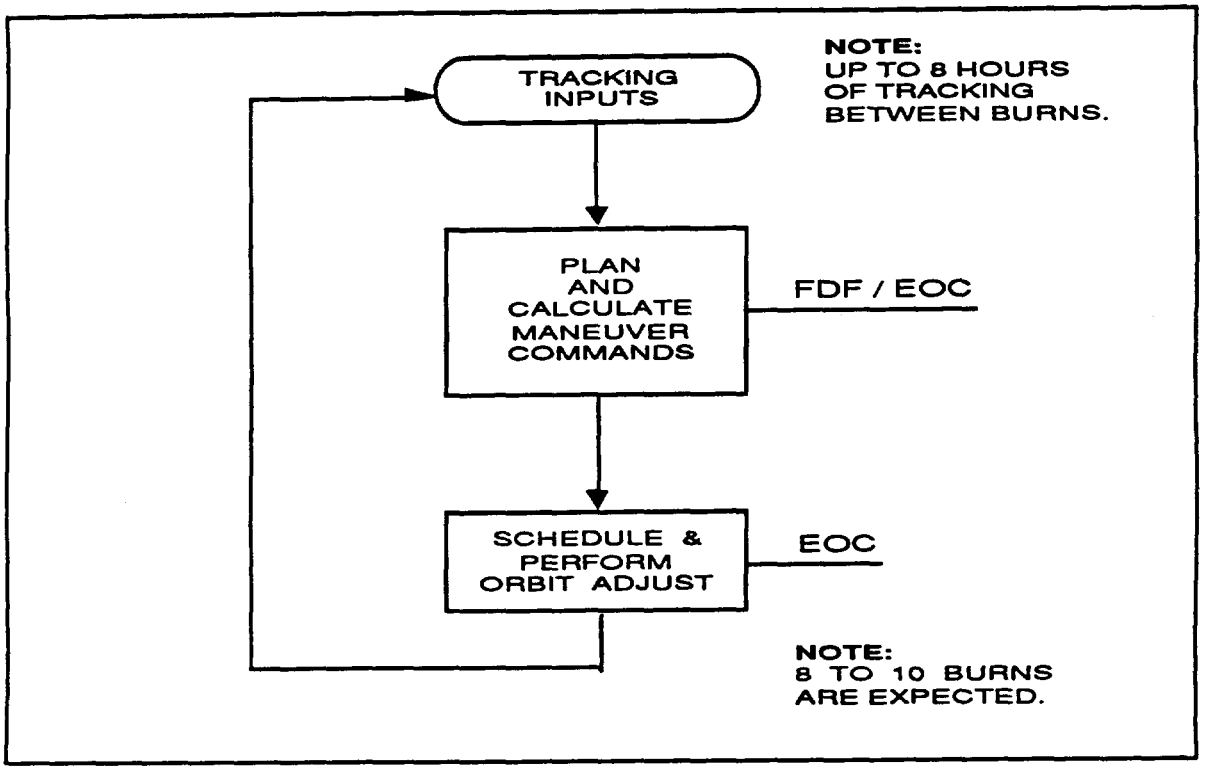

FIGURE 26 DELTA-V ACTIVITY FLOW

5.6.2 Activation

Spacecraft activation follows the launch through Orbit Acquisition phases, and leads into orbital mission operations. Most activation events occur over a period of several weeks during the Operational Initialization phase. The MODIS PI is responsible for all MODIS activation plan, and is expected to provide the MODIS contribution to the initial Spacecraft activation plan. The FOT is responsible for the Spacecraft Bus activation plans and procedures.

The MODIS PI or designated representative(s) is present in the EOC during each MODIS activation event and has direct responsibility for MODIS activation procedures within the EOC. The FOT supports the MODIS PI or designated representative(s) in implementing instrument activation procedures, and coordinates initial MODIS operations with other Spacecraft Bus and instrument activation events throughout this phase of operation. Specific requirements for FOT and MODIS PI support are TBD. Activities during MODIS instrument activation are defined in Appendix VI.

The FOT is responsible for the activation and checkout of the Spacecraft subsystems and the following activities:

a. Monitor Spacecraft Bus housekeeping telemetry.

b. Monitor and verify Spacecraft Bus operating mode.

c. Monitor and verify MODIS health and safety data.

d. Coordinate the MODIS operations with the Instrument Team.

e. Monitor and verify Spacecraft Bus resources.

f. Spacecraft scheduling and planning.

g. Stored command table loads.

h. TDRS and EOS-AM Spacecraft ephemerides load.

i. Instrument microprocessor loads (if required).

j. Memory dump verification (if required).

k. Verify stored commands execution.

l. Coordinate the FDF data inputs to the EOC for required Delta-V .. operations and TONS.

m. Verify SSR status and management initialization (normal operation).

n. Spacecraft and Ground Systems operational phase readiness verification and turn-over to the Spacecraft mature operations.

5.6.3 Transition to Orbital Operations

After the EOS-AM Spacecraft Bus and instruments are fully activated, Spacecraft operations transitions into the Operational mission phase. When this occurs, the normal daily flight operations planning and scheduling process begins along with normal ground system operations.

The FPSG uses the MODIS baseline activity profile (provided before launch by the MODIS PI), unless an operations request containing an activity deviation list is received from the MODIS PI, to generate MODIS instrument activity lists.

5.7 Spacecraft Maneuvers

Several types of maneuvers are executed by the Spacecraft at predefined points throughout the EOS-AM mission. A nominal long-term schedule of maneuver events is available prior to launch, and is maintained current along with other long-term planning information. The EOS-AM Science Team will be responsible for factoring the maneuver schedule into the long term science plan, and for establishing overall compatibility between this schedule and planned science operations. The FOT is responsible for maintaining maneuver schedule currency, and for notifying the EOS-AM Science Team (via the Project Scientist) of maneuver schedule changes.

The FOT has responsibility for all maneuver operations. The FOT and FDF are jointly responsible for the detailed planning of each Spacecraft maneuver and the FOT is responsible for maneuver execution. For orbit adjust maneuvers, the FDF is responsible for developing plans for corrective firings of the orbit adjust system and also is responsible for providing planning aid and operational data updates to reflect maneuver results. The FPSG coordinates with the FDF to schedule specific maneuver events consistent with long term science plan intent and is responsible for scheduling instrument operations to accommodate maneuver implementation. The MODIS PI is responsible for defining all maneuver accommodation requirements (including special command sequences, EOC displays, etc.) for MODIS, for reviewing the maneuver operational plans, and for advising the FOT, as appropriate, of any concerns regarding these plans. Specific MODIS requirements for Spacecraft maneuver accommodation actions are defined in Appendix IV.

5.8 Special Observations

The FOT is responsible for coordinating with the MODIS PI regarding any special observation activities, such as TBD, which may affect MODIS.

Specific MODIS requirements for special observation actions are defined in Appendix IV.

5.9 Contingencies

In the event that a Spacecraft emergency situation develops, the FOT is responsible for taking whatever action is appropriate to preserve Spacecraft health and safety. The FOT requests emergency support from the NCC. If TDRSS cannot be used or is not available, the NCC works with the DSN/GN/WOTS for support. The FOT utilizes emergency support, as available, to establish a safe Spacecraft configuration. First priority is given to mission critical functions (i.e., communications, power, attitude control), and then to establishing a safe configuration for the EOS-AM instruments and other Spacecraft Bus subsystems.

The MODIS PI is responsible for defining the safe/survival configuration(s) for MODIS, and the command sequences necessary to establish that configuration. Specific MODIS requirements for contingency actions are defined in Appendix IV.

If the Spacecraft enters Safe Mode or Survival Mode, the FOT is responsible for verifying/establishing a safe configuration for each instrument and Spacecraft Bus subsystem. The FOT notifies the MODIS PI that the Safe Mode or Survival Mode has interrupted normal operation, and of resulting MODIS instrument status. The MODIS PI is responsible for advising the FOT of any need for further priority attention to MODIS. The MODIS PI is also responsible for defining any reactivation procedure to be followed in restoring normal instrument operation. The FOT is responsible for implementing all Safe Mode or Survival Mode reaction and recovery operations. These actions will include:

a. Initiate the appropriate contingency procedure.

b. Recover and analyze stored housekeeping / health and safety data from the on-board data storage device (if possible).

c. Notify the MODIS PI to coordinate actions that may have occurred which relate to instrument operation.

d. Notify cognizant engineering and management personnel.

e. Request appropriate institutional support.

f. Analyze associated telemetry data available for problem isolation.

g. Initiate a corrective action plan if applicable.

h. Continue to monitor real-time telemetry if available, and log all events.

The FOT notifies the MODIS PI in the event an instrument health or safety incident is discovered by the Flight Operations Team. The FOT follows predefined instructions as prescribed by the MODIS PI. The FOT has available and maintains a set of "safing" commands provided by the PI. The MODIS PI will be responsible for evaluating the incident and advising the FOT of instrument status and plans for resuming operations.

The FOT is responsible for re-establishing the continuity of planned science operations, as defined in the Spacecraft activity schedule, once the Spacecraft has been returned to a normal operating configuration.

The MODIS PI is responsible for defining all health and safety telemetry parameters and EOC monitoring criteria for MODIS, and the procedures to be followed by the FOT should a MODIS health and safety incident occur. The FOT is responsible for

executing predefined monitoring and response procedures, consulting with the MODIS PI regarding instrument status, and further response actions which might be appropriate. The FOT advises the PI of MODIS status regarding operational planning activities which are currently underway and the FOT is responsible for adjusting ongoing plans for MODIS operation to accommodate the situation at hand (in coordination with the MODIS PI). The MODIS PI is responsible for defining command sequence, EOC procedure and any other modifications necessary to reflect changes in MODIS operational capability or status whenever necessary throughout the EOS-AM mission.

6 INTERFACE EXCHANGE ITEMS

The MODIS PI exchanges information electronically with the EOC and the Flight Operations Team by using the IST. The IST is connected to the EOC via the EOSDIS computer networks. These networks are available around the clock, supporting the exchange of information whenever it is required. The formats and forms for this information exchange is the responsibility of the ECS contractor and is TBD.

6.1 Planning and Scheduling

The MODIS PI may access any planning and scheduling products in the EOC. This includes the long term plans, planning aids, the list of routine activities for the instrument, the list of deviations for the instrument, the TDRSS schedule for the Spacecraft, and the schedules for the other instruments and the Spacecraft Bus subsystems.

The planning aids consist of information derived from predicted orbit information and are identified in Appendix V. The planning aids can display the information graphically or the information can be listed in tabular form. Details are TBD.

The list of routine instrument activities can be reviewed by the MODIS PI using the IST. This list is the activities that MODIS normally perform over its cycle (e.g., per orbit, per 16 day orbit cycle). It is initially defined prior to launch and is changed infrequently. Modifications are discussed with the Flight Planning and Scheduling Group (FPSG); modifications that impact the science data collected are coordinated with the IWG and the project scientist. Modifications to the instrument activity list are submitted via the IST to the FPSG for inclusion in the planning and scheduling database after the proper approval.

The MODIS PI can submit and review the schedule of deviations from the normal activities. This schedule includes activities such as special calibrations and microprocessor loads. These deviations are provided to the FPSG one (TBR) week in advance. Note that changes to the routine activities due to an instrument or Spacecraft problem are handled as exceptions to the plans and schedules. The schedule of activities and commands associated with recovering from an anomaly and typically developed over shorter time frames than those for normal operations.

Quick look data, either housekeeping, instrument engineering, or science data, is identified during the scheduling process and the secondary header flag in the packet is set or the EDOS delivery orders for the delivery of the data from a TDRSS session is modified. The MODIS PI submits requests for quick look data at least several days in advance to the flight planning and scheduling group using the IST.

6.2 Command Generation

Command generation includes real-time commands, SCC stored commands, and commands/loads for the MODIS microprocessor.

The MODIS PI provides the instrument microprocessor software and tables to the EOC for uplink, using the IST. Non-urgent information for uplink is provided at least two days in advance. The IST is also used to send the EOC the command mnemonics required to implement any non-routine activity, such as the commands to recover from an anomalous situation. The IST/EOC procedures and protocols insure that the transfer of information to be uplinked is authorized, complete, and consistent.

The MODIS PI is capable of using the IST to review and/or approve the command loads generated by the FOT in the EOC from the routine activity list and the requested deviations from normal operations. Planning, scheduling, and/or command products that must be approved by the MODIS PI for routine and anomalous operations are TBD.

6.3 Real Time Operations

Using the IST, the MODIS PI may monitor the instrument and Spacecraft housekeeping data as it is received in the EOC. The data may be displayed using any previously defined format that is in the operations data base. Formats for plots, alphanumeric information, and graphic formats are TBD.

The MODIS PI may monitor the commanding process via the IST. Status information is available on which commands have been generated, which have been successfully uplinked, and which have been issued to the instrument. The verification that the instrument successfully executed the commands is the responsibility of the MODIS PI. Exceptions are to TBD by the ECS contractor and the MODIS PI.

6.4 Analysis

The MODIS PI may use the IST to perform analysis on instrument and spacecraft data. The housekeeping data can be plotted versus time or versus other housekeeping parameters. Standard capabilities include trend analysis, and minimum/maximum/mean statistics.

The following IST functions are provided for instrument engineering, quick look science data and other science analysis: TBD.

The analysis of health and safety data is limited to that received by the EOC, and includes all real time housekeeping data and at least one orbit per day of a complete orbits worth of housekeeping data from the onboard SSR. If the MODIS PI needs housekeeping data from, a specific time of day, this is requested in advance.

In addition to housekeeping data the MODIS PI is able to use the IST to access the EOC operations history log. This log contains a complete log of all significant activities in the EOC, including the schedule, command and command verification information, alarms and limit violations, and selected operator actions. About 7 days of operations history data is kept in the EOC; older logs are available from the GSFC DAAC. The IST provides the tools to extract data from the operations history by time and type.

6.5. Operations Database

The MODIS PI supplies the EOC with an operations data base prior to launch that contains the instrument telemetry formats, command formats, procedures, limits, constraints, and so on. The MODIS PI may view this data base using the IST and may submit requests for changes to the data base. The data base is under configuration control. The ECS contractor is responsible for configuration control and the details are TBD.

Urgent requests can be handled more expeditiously (details are TBD).

6.6 Other Interface Exchange Items

The IST provides an electronic mail capability to support the general communication between the MODIS PI, other instrument teams, and the FOT personnel in the EOC.

The IST provides a file transfer capability for the exchange of bulk data such as microprocessor loads and dumps.

The MODIS PI uses the IST to provide the EOC with periodic operations reports on the status of MODIS. Integrated reports on the Spacecraft and instruments developed by the EOC are available to the MODIS PI via the IST.

7 JOINT OPERATING PROCEDURES

The interface procedures which are followed in conducting MODIS flight operations are understood to be as follows:

7.1 PI/EOC FOT Interface

The MODIS PI and the Flight Operations Team (see Figure 27) interface routinely regarding mission planning, uplink generation, and performance verification matters and interface as required regarding real-time operations. The FOT and MODIS PI interface as appropriate regarding MODIS instrument accommodations of Spacecraft maneuvers and contingency operations. The FPSG serves as the primary point of contact for the MODIS PI regarding all EOC operations, and regarding all flight operations plans, planning aids, command generation inputs and outputs, and performance reports which are pertinent to MODIS.

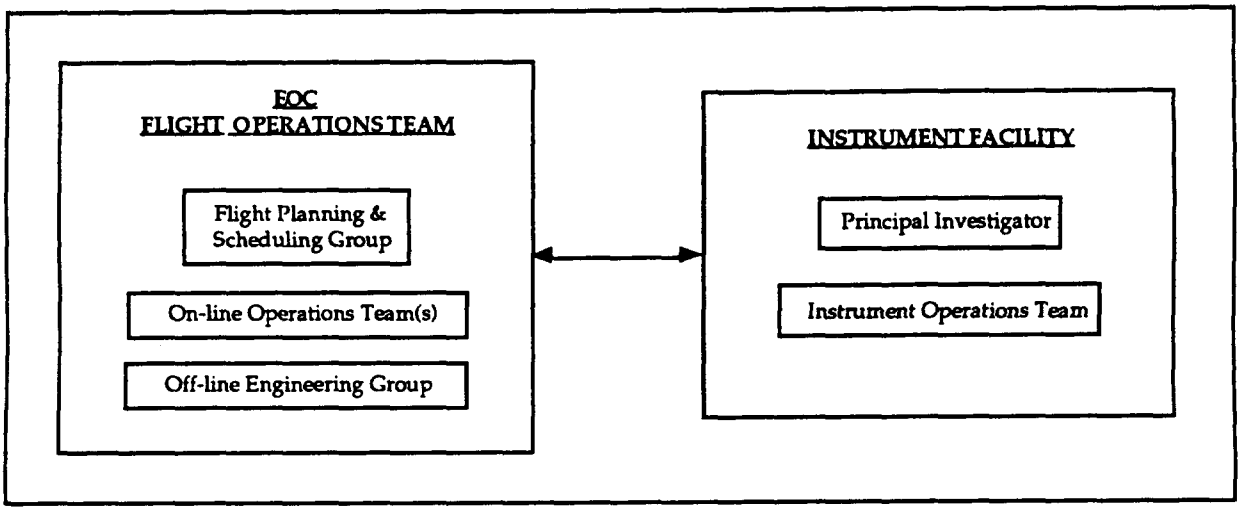

FIGURE 27 PI FACILITY / EOC FOT INTERFACE

7.1.1 Daily Operations Planning

Under normal circumstances, the MODIS baseline activity profile is used to develop the initial activity list 4-7 days before the corresponding operational period begins. The MODIS PI provides exceptions, activity deviation lists, in the event normal MODIS baseline activities needs to be altered. The FPSG staff coordinates all operations planning inputs, and keeps the MODIS PI advised of the timetable for accessing plans to be reviewed, and for providing inputs and/or comments regarding these plans.

7.1.2 Command Generation

Command generation is performed by the FPSG using EOC resources. The FPSG serves as the point of contact for all review comments related to command generation processing.

7.1.3 Special Operations

The FPSG notifies the MODIS PI whenever a Spacecraft maneuver operation is being planned, or whenever a special operation (TBR) or contingency operation which affects MODIS occurs. The MODIS PI defines MODIS requirements for accommodating the special operation and/or for resuming normal operation when the special operation has concluded. Where real-time operation is a factor, the FOT represents the MODIS PI in coordinating implementation of appropriate real-time procedures. If a special operation disrupts planned operations (e.g., contingency situation), the FOT advises the MODIS PI of the disruption, and they will jointly define the procedure for restoring operational plan continuity.

7.1.4 EOC Database

The FPSG manages the availability of operations plans, planning aids, and command generation processing inputs and outputs, and coordinates with the MODIS PI regarding access to this information. The MODIS PI generates all additions, deletions, and modifications to the EOC database for MODIS, and notifies the FPSG of each submission. The FPSG coordinates the database approval and update procedure required to incorporate each change, and notifies the MODIS PI when the change has been incorporated. The MODIS PI reviews the modified database, and notifies the FPSG of any discrepancy which requires corrective action. The format to be used is TBD and is the responsibility of the ECS contractor.

7.1.5 Microprocessor Load Verification

The FOT transmits the MODIS microprocessor loads and verifies the loads via checksum (TBR). If verification beyond a checksum is required or a checksum capability is not provided, the MODIS PI verifies that each microprocessor load transmitted to the instrument(s) is properly received and installed within microprocessor memory. When verification is prerequisite to instrument scheduling, the MODIS PI will notify the FPSG staff of load verification. When real-time telemetry indications of microprocessor load acceptance are available, load verification feedback may be provided by the FOT at the discretion of the MODIS PI.

7.2 PI/EOC Command Management Function Interface

The MODIS PI interfaces with the EOC through the IST interface defined in TBD. The basic interface for information exchange is via file transfer. The MODIS PI has access to EOC resident information and processing capabilities (details are TBD).

The MODIS PI interfaces procedurally with the EOC as follows:

7.2.1 Operations Plans

In support of flight planning activities, the MODIS PI can access EOC information via the IST. Any comments or proposed deviations to operational plans may be flagged (TBR) for the FPSG attention.

7.2.2 Planning Aids

Short term planning aid data initially appears within the EOC TBD weeks beforehand, and will be updated at TBD intervals. Long term planning aids are updated as requested by the EOS-AM Science Team (normally for each long term science plan update). Special planning aid data files may be assembled to contain only data of interest to the MODIS PI and transferred to the MODIS IST. Planning aid data is updated within the EOC according to a (TBD) regular schedule.

7.2.3 Command Generation

Routine Spacecraft command generation processing will begin TBD hours before the operational period, and is completed no later than TBD hours beforehand. The MODIS PI does not interact directly with EOC Spacecraft command generation processing.

7.2.4 Performance Feedback

Observed performance of MODIS is documented in feedback reports which are transmitted in text form using the electronic mail capabilities of the EOC and IST interface. Routine and special reports are generated by the MODIS PI at his IST, and are transferred to the EOC for posting. Performance reports are filed and archived by the FPSG.

7.3 PI/FOT Interface

The MODIS PI and the on-line operations team interface to the extent that real-time operations are significant to the MODIS PI, and as required to exchange instrument/Spacecraft Bus performance information or to supplement the routine interface between the MODIS Principal Investigator and the FPSG.

The MODIS PI interfaces procedurally with the FOT as follows:

7.3.1 Real Time Operations

For real-time operations, the on-line operations team (TBD) is the point of contact for the MODIS PI (TBR). In the event of an instrument anomaly, MODIS operations team (TBD) coordinates with the on-line operations team (TBD) for any actions required. MODIS operations team (TBD) contacts the MODIS PI as soon as possible to review the situation and to define any follow-up activities required.

7.3.2 Special Operations

The normal interface for handling maneuver accommodation, contingency adjustments, and departures from planned operations involves the MODIS PI and the FPSG. The on-line operations team may, however, become involved in these matters in lieu of the FPSG staff during non-working hours, especially under time-critical circumstances. In such a case, the on-line operations team handles immediate concerns, with the FPSG staff handling longer-term and follow-through aspects.

7.3.4 Initial Operations

During initial MODIS activation, the MODIS PI or delegate at the GSFC EOC works directly with the FOT. Flight planning and scheduling personnel interface with the MODIS PI to perform the MODIS planning and scheduling functions.

7.3.5 Performance Verification

The MODIS PI and FOT may exchange performance information regarding instrument and/or Spacecraft operation in order to fully evaluate observed performance and capability. A Spacecraft engineer from the FOT serves as the point of contact for Spacecraft performance verification inquiries.

7.4 PI/DAAC Interface

The MODIS PI interfaces with the DAAC via DAAC toolkits (that are co-operable with the IST toolkit). DAAC toolkit details are TBD. The data processing interface between IST(s) and the DAAC is utilized for flight operations functions.

Details are TBD.

7.5 PI Access to Telemetry

The following guidelines define access to telemetry data for the MODIS PI:

a. Telemetry data is recorded continuously throughout the EOS-AM mission by the on-board SSR. Data retrieval is obtained TBD per orbit.

b. Telemetry data is acquired in real-time for approximately 20 minutes of each orbit.

c. The on-line operations team monitors all real-time contact intervals and the telemetry data acquired is processed in real-time. The EOC computer performs status determination, event detection and limit-check processing, and generates displays containing telemetry data and processing results.

8 IMPLEMENTATION AGREEMENTS

The following paragraphs describe the plans for implementing the data input to the operational system to support MODIS flight operations.

8.1 Flight Operations Database

The basic flight operations database are provided by the Spacecraft contractor. Database conversion, to the EOC system, is the responsibility of the EOSDIS Core System contractor. This database, containing commands, telemetry, and limits, is used for in-orbit flight operations.

8.1.1 Commands

Instrument commands are placed in the EOC database. The database contains command capabilities identified by the MODIS PI, with support from the FOT and Spacecraft subsystem engineers. All flight operational commanding required is tested and demonstrated during Spacecraft Integration and Test. The EOC command categories are TBD.

8.1.2 Instrument Telemetry

The MODIS PI, with support from the FOT and Spacecraft subsystem engineers, identifies telemetry point definitions required for flight operations; and the Spacecraft contractor ensure that telemetry points have been defined and tested/demonstrated during Spacecraft Integration and Test.

8.1.3 Instrument Limits

The MODIS PI, with support from FOT and Spacecraft subsystem engineers, ensures that the Spacecraft integration and test limit definitions are correct for on-orbit flight operations. If not, new limits are defined and the ECS contractor coordinates (Project approval and entry) the change to the EOC database.

The MODIS PI with support from the FOT and Spacecraft subsystem engineers identifies the specific reactions to be taken during all out-of-limit conditions (i.e. Red, Yellow, and Delta limits). The FOT documents all out-of-limit reactions in the TBD Plan.

8.1.4 Database Approval

The MODIS PI and Spacecraft subsystem engineers access the database via IST to review their appropriate section(s). Changes to the database are submitted via IST mail. The PI and Spacecraft subsystem engineer checks the database to ensure that the data is functionally and syntactically correct. After all of the database information for MODIS has been approved, the MODIS PI signs off on his portion of the EOC database.

8.2 Operational Displays

The MODIS PI, with support from the FOT and Spacecraft subsystem engineer, identifies which displays are needed for in-orbit flight operations. Any displays deemed necessary are defined by the MODIS PI and once approved, are entered or converted by the EOSDIS Core System contractor. The MODIS PI with support from the Spacecraft subsystem engineers, assists the FOT with any conversion problems (i.e. mnemonics, values, etc.). The mechanism for defining pages and transferring Spacecraft integration and test pages to the EOC is TBD.

8.3 Operations Procedures

The MODIS PI, with support from the FOT and Spacecraft subsystem engineers, establishes what operational procedures are needed for on-orbit flight operations. The MODIS PI should keep in mind that I & T building blocks may have to be assembled into contiguous functional activities that are of reasonable duration harmonious with the in-orbit operational contacts. The FOT reviews all completed operational procedures for compatibility with flight operations such as procedure duration, logical break points, etc.

8.3.1 EOC Definition

The FOT furnishes to the MODIS PI a description of the EOC operations procedures. In addition, the FOT is available to answer questions regarding EOC operations during operations procedure development.

8.3.2 I&T Procedures to EOC Operations Procedures Conversion

The conversion of procedures to the EOC is the responsibility of the EOSDIS Core System contractor and is TBD.

8.3.3 I&T Databases to EOC Operations Databases Conversion

The conversion of databases to the EOC is the responsibility of the EOSDIS Core System contractor and is TBD.

8.3.4 Flight Unique Procedures

The MODIS PI, with support from the FOT and Spacecraft subsystem engineers, identifies any MODIS instrument unique flight operations procedures. These procedures are created by the MODIS PI with support from the Spacecraft subsystem engineers and submitted to the FOT.

8.3.5 Procedure Submittal

The MODIS generated operations procedures are submitted to the FOT by one of the following methods: TBD

Procedure entry, after approval, into the operational system is the responsibility of the EOSDIS Core System contractor and is TBD.

8.3.6 Approved EOC Procedures

Once the procedures have been reviewed and approved, they cannot be changed without the NASA Mission Operations Manager's (MOM) approval.

8.3.7 Procedure Verification

The FOT reviews all operations procedures to verify the accuracy of the directives and also the logic to the extent possible. The MODIS PI with support from the FOT and Spacecraft subsystem engineers identifies operations procedures that require execution for verification. Prior to launch, the FOT conducts a scheduled verification of operations procedures that will include EOC execution and transmission to the Spacecraft/instrument. Procedure verification details are the responsibility of the EOSDIS contractor and are TBD.

8.4 Narrative Procedures

The MODIS PI, with support from the FOT and Spacecraft subsystem engineers, defines any standard and contingency operating procedures needed for in-orbit flight operations. These procedures are defined by the EOSDIS contractor and are TBD.

8.4.1 Standard Operating Procedures

The standard operating procedures define the day-to-day operations of the EOS-AM Spacecraft at the EOC.

These procedures are baselined and procedure changes require the NASA Mission Operations Manager's approval.

These procedures are defined by the EOSDIS contractor and are TBD.

8.4.2 Contingency Operating Procedures

The contingency operating procedures define the actions required by the FOT during potential and credible anticipated non-nominal situations. Examples of this category of procedures for MODIS are:

- Instrument requirements during Spacecraft safe mode and survival mode.
- A procedure to be followed in the event of a MODIS ALERT condition.

These procedures are defined by the EOSDIS contractor and are TBD.

APPENDIX I

10 SPACECRAFT CONTROLS COMPUTER INSTRUMENT REQUIREMENTS

Specific requirements for interaction between the Spacecraft on-board computer and MODIS are understood to be as follows:

10.1 Stored Command Requirements

MODIS stored command requirements are as follows:

10.1.1 Absolute Time Commands

MODIS requirements for Absolute Time Command utilization are TBD.

10.1.2 Relative Time Command Sequences

MODIS requirements for Relative Time Command Sequences (RTCS) command utilization are TBD.

10.2 Telemetry Monitor Requirements

Telemetry Monitor (TMON) application to MODIS is TBD.

APPENDIX II

20 INSTRUMENT COMMAND PROCESSING REQUIREMENT

Specific command processing requirements for MODIS are understood to be as follows:

20.1 Activity Planning Requirements

Activity planning for MODIS is as follows:

20.1.1 Activity Definition

TBD

20.1.2 Event Definition

TBD

20.1.3 Activity Scheduling

There are critical timing requirements for MODIS commands or activities. Details are TBD.

20.2 Constraint Check Requirements

TBD

20.2.1 Command Level

TBD

20.2.2 Activity Level

TBD

20.2.3 Schedule Conflicts

The timing of MODIS commands may be TBD to resolve schedule conflicts.

20.3 Real-Time Command Requirements

TBD

20.3.1 Utilization Plans

TBD

20.3.2 Command Generation Capabilities

TBD

20.3.3 Transmission Requirements

There are no unique requirements for transmitting real-time MODIS commands.

20.4 Microprocessor Load Handling Requirements

TBD

20.4.1 Uplink Message Structures

TBD

20.4.2 Transmission Requirements

Each microprocessor load is created as a unit, and is transmitted in complete form. If retransmission is necessary, the complete load is retransmitted.

20.5 Command Database Requirements

TBD

20.5.1 Command Definition

TBD

20.5.2 Unique Command Structures

None have been identified for MODIS.

20.5.3 Activity Definitions (EOC Command Management)

TBD

20.5.4 Stored Command Sequences (EOC Command Management)

TBD

20.5.5 Real-Time Command Sequences (EOC)

TBD

20.5.6 Utilization Constraints

TBD

APPENDIX III

30 TELEMETRY PROCESSING REQUIREMENTS

Specific requirements for the processing of real-time MODIS telemetry data are understood to be as follows:

30.1 Decommutation Requirements

All telemetry required by the EOC to support instrument early orbit operation and activation are assumed to be defined in the I&T databases to be transferred to the EOC.

30.1.1 Engineering Telemetry Format

MODIS telemetry formats are TBD.

30.1.2 Science Telemetry Format

MODIS telemetry formats are TBD.

30.2 Derived Function Generation Requirements

TBD

30.3 Status Determination Requirements

TBD

30.3.1 Mode Definition

TBS

30.3.2 Event/Mode-Change Detection

TBD

30.4 Uplink Verification Requirements

TBD

30.4.1 Command Verification

TBD

30.4.2 Microprocessor Load Verification

MODIS microprocessor load transmissions are verified by the FOT with a check sum or TBD method.

The MODIS PI verifies microprocessor loading in the instrument. (TBD)

30.5 Health and Safety Monitoring Requirements

MODIS health and safety is monitored by the FOT. The MODIS PI identifies critical instrument health and safety parameters along with their limits. The MODIS PI may monitor MODIS health and safety at his facility if desired.

30.5.1 Limit Check Requirements

TBD

30.5.2 Alarm Requirements

Alarms are required when yellow or red limits are reached. Other conditions are (TBD).

30.6 Display Generation Requirements

TBD

30.6.1 Parameter Calibration

TBD

30.6.2 CRT Page Display

TBD

30.6.3 Strip-Chart Recorder Displays

TBD

30.6.4 Hardcopy Outputs

TBD

30.7 EOC Telemetry Database Requirements

TBD

30.7.1 Telemetry Function Definition

TBD

30.7.2 Derived Function Definition

TBD

30.7.3 Mode/Event Definition

TBD

30.7.4 Limit Check Thresholds

TBD

30.7.5 Alarm Generation Criteria

TBD

30.7.6 Command Verification Criteria

TBD

30.7.7 Display Definition

TBD

30.7.8 Calibration Parameters

TBD

APPENDIX IV

40 OPERATIONAL ACTION REQUIREMENTS

Specific MODIS requirements for operational action under specified conditions are understood to be as follows:

40.1 Contingency Action Requirements

TBD

40.1.1 Emergency Power-Down

The emergency power down sequences for MODIS are TBD.

40.1.2 Limits/Alarm Reaction

Out-of-limits conditions are reported to the MODIS Principal Investigator. Out of limit conditions are (TBD).

40.1.3 Spacecraft Safe Mode (SCC running)

TBD.

40.1.4 SCC Halted

TBD

40.1.5 Other On-Board Processors Halted

TBD

40.1.6 Uplink Transmission Failure

TBD

40.2 Preactivation Requirements

TBD

40.3 Spacecraft Maneuver Accommodation

The plan for MODIS operation during Spacecraft maneuvers is TBD.

40.3.1 Orbit Adjust

TBD

40.4 Alignment/Calibration Requirements

TBD

40.5 Special Observation Requirements

TBD

APPENDIX V

50 PLANNING AID REQUIREMENTS

A standard set of orbital parameters and selected orbital events is generated by the FDF and transferred to the EOC (and TBD) where the MODIS PI can access the data for planning purposes and for use in the generation of any additional unique planning aids required. The accuracy of the data is TBD (the best possible).

The following are example summaries of the long term and short term data to be provided. The actual data to be selected for MODIS use is TBD. Details associated with these TBD parameters are defined in TBD.

50.1 Parameter Definition

TBD

50.1.1 Long Term

The long term aids to be used by MODIS are TBD.

The following is an example summary of long term aids:

EOS-AM Orbital Characteristics

a. Brouwer mean orbital elements
b. Solar beta angle
c. Direction of S/C flight
d. Local mean Sun time
e. S/C ascending node
f. Length of TBD day and night
g. Length of S/C day and night

Ephemeris:

a. Solar
b. Lunar
c. Planetary

Star Catalog

a. Ascending Node Prediction
b. Longitudinal spacing and precession rate.

Solar Eclipse predictions.

50.1.2 Short Term

The short term aids to be used by MODIS is TBD.

The following is an example summary of short term aids:

a. Spacecraft ephemeris
b. Brouwer mean orbital elements.
c. Predicted Orbit Adjust time
d. Solar Eclipse predicts.

Orbital Events
a. Ascending and descending node
b. Spacecraft nadir sunrise and sunset terminator crossing
c. Terminators (both) for TBD degree line of sight at TBD altitude
d. South Atlantic Anomaly entrance and exit.
e. Sunset and Sunrise at TBD altitude.
f. Yaw and elevation angle to sun TBD-seconds before sunset
g. Yaw angle to sun at sunrise for TBD altitude.
h. Grazing sunrise begin/sunset end event
i. Grazing sunrise end event

Solar Beta Angle.

50.2 Parameter Specifications

The MODIS unique specifications for planning aid parameter are TBD

50.2.1 Information Accuracy

TBD.

50.2.2 Data Precision

TBD.

50.2.3 Data Frequency

TBD.

50.3 Information Handling Requirements

The MODIS PI accesses planning and scheduling tools via his IST. Details are TBD.

50.3.1 Format

Standard IST/EOC interface file format is TBD.

50.3.2 Packaging

Standard (i.e., time-annotated date file) is TBD.

50.4 Access Timeline Requirements

MODIS accesses planning and scheduling aid data on a TBD basis.

50.4.1 Lead Time

TBD (i.e., long term parameters consistent with long-term science planning schedule; short-term parameters TBD days/hours beforehand).

50.4.2 Retention

TBD (i.e., long term parameter projections throughout mission, short-term parameters until current).

APPENDIX VI

60 SPECIAL ACTIVATION REQUIREMENT

Specific requirements for activation of MODIS are understood to be as follows:

60.1 Commanding Requirements

Commands required for activation and normal operations are predefined in the database (I&T and EOC).

60.1.1 Special Command Sequences

At least TBD command sequences are required for the initial activation checkout steps planned for MODIS.

60.1.2 Special Command Constraints

The EOC TBD mode transmission are used for all MODIS commands not defined in the database.

60.1.3 Real-time Command Generation

There are TBD special real-time command generation requirements for MODIS activation. All normal real-time command generation capabilities (defined in 20.4) are required.

60.1.4 Special Command Transmission Requirements

TBD.

60.2 Telemetry Processing Requirements

TBD

60.2.1 Special Telemetry Formats

There are no special telemetry formats identified for MODIS.

60.2.2 Special Processing Functions

TBD

60.2.3 Special Processing Parameters

TBD

60.2.4 Special Displays

MODIS science functions are to be displayed in TBD.

60.2.5 Strip Chart Recorder

TBD

60.3 Remote Support Coordination Requirements

TBD

60.3.1 Quick-look Playback Handling

Access to quick-look data is provided via the TBD.

60.3.2 Voice Communications

Voice communications are required between MODIS activation position within the EOC and the MODIS remote terminal facility throughout MODIS activation.

60.4 Facility Requirements

The MODIS PI requires access to TBD standard instrument activation position within the EOC, and standard office-type working space and services for a TBD activation staff.

APPENDIX VII

70 ABBREVIATIONS

ACE	Attitude Control Electronics
ADAC	Attitude Determination and Control
APID	Application Process Identifier
ARIA	Advanced Range Instrumented Aircraft
ARC	Ames Research Center
ASTER	Advanced Spaceborne Thermal Emission and Reflection
ATC	Absolute Time Command
BDD	Baseline Description Document
BDU	Bus Data Unit
C&DH	Command & Data Handling
CADU	Channel Access Data Unit
CCSDS	Consultative Committee For Space Data Systems
CERES	Clouds and Earth's Radiant Energy System
CLTU	Command Link Transmission Unit
CMD	Command
COP	Command Operation Procedure
COMM	Communications Subsystem
CSMS	Communication and System Management Segment
CTIU	Command and Telemetry Interface Unit
C&T	Command and Telemetry
DAAC	Distributed Active Archive Center
DADS	Data Archive and Distribution System
DAR	Data Acquisition Request
DAS	Direct Access System
DB	Direct Broadcast
DCU	Data Control Unit
DDL	Direct Downlink
DMU	Data Memory Unit
DP	Direct Playback
DSN	Deep Space Network
ECOM	EOS Communication Network
ECS	EOSDIS Core System
EDOS	EOS Data and Operations System
EDU	Error Detection and Correction Data Unit
EOC	EOS Operations Center

EOS	Earth Observing System
EOS-AM	Earth Observing System - 10:30 descending node orbit
EOSDIS	EOS Data and Information System
EPS	Electrical Power System
ESDIS	Earth Science Data and Information System
ESN	ESDIS Science Network
FDF	Flight Dynamics Facility
FDIR	Failure Detection, Isolation and Recovery
FIFO	First In First Out
FOS	Flight Operations Segment
FOT	Flight Operations Team
FOV	Field of View
FP	Format Processor
FPSG	Flight Planning and Scheduling Group
GIIS	General Instrument Interface Specification
GN	Ground Network
GN&CS	Guidance, Navigation and Control Subsystem
GSFC	Goddard Space Flight Center
HGA	High Gain Antenna
I & T	Integration and Test
ICC	Instrument Control Center
ICD	Interface Control Document
IFOU	Instrument Flight Operations Understanding
IMS	Information Management System
IST	Instrument Support Terminal
IWG	Investigator Working Group
JPL	Jet Propulsion Laboratory
Kbps	Kilobits per Second
KSA	Ku-Band Single Access
LTIP	Long Term Instrument Plan
LTSP	Long Term Science Plan
Mbps	Megabits per Second
MISR	Multi-angle Imaging Spectro Radiometer
MO&DSD	Mission Operations and Data Systems Directorate
MODIS	Moderate Resolution Imaging Spectrometer
MOM	Mission Operations Manager
MOPITT	Measurements of Pollution in the Troposphere
MSFC	Marshall Space Flight Center

NASA	National Aeronautics and Space Administration
NASCOM	NASA Communications Network
NCC	Network Control Center
NIR	Near Infrared
NSI	NASA Science Internet
P/B	Playback
PGS	Product Generation System
PI	Principal Investigator
PSCN	Program Support Communications Network
R/T	Real-Time
RAM	Random Access Memory
ROM	Read only Memory
RS	Reed-Solomon
RTCS	Relative Time Command Sequence
SAR	Schedule Add Request (TDRSS)
SCC	Spacecraft Controls Computer
SCF	Science Computing Facility
SDF	Software Development Facility
SDPS	Science Data Processing Segment
SCT	Stored Command Table
SFE	Science Formatting Equipment
SMA	S-Band Multiple Access
SMC	System Management Center
SN	Space Network
SSA	S-Band Single Access
SSR	Solid State Recorder
STGT	Second TDRSS Ground Terminal
SWIR	Short Wave Infrared
TBD	To Be Determined
TBR	To Be Reviewed
TBS	To Be Supplied
TCP	Telemetry and Command Processor
TDRS	Tracking and Data Relay Satellite
TDRSS	Tracking and Data Relay Satellite System
TL	Team Leader
TLM	Telemetry
TMON	Telemetry Monitor
TOD	Time-of-Day
TONS	TDRSS Onboard Navigation System
USCCS	User Spacecraft Clock Calibration System
UTC	Universal Time Code

VCID	Virtual Channel Identifier
VCDU	Virtual Channel Data Unit
VIS	Visible
VNIR	Visible and Near Infrared
WOTS	Wallops Orbital Tracking Station
WSGT	White Sands Ground Terminal

Next Assembly	Used on
20008500G1	EOS–AM

First Application
EOS–AM

Revisions		Rev B	
Ltr	Description	Date	Approved
Initial Issue		04–08–93	CM–GSR
Rev. A	Revised per ECN EOS0045	07–15–93	CM–GSR
Rev. B	Revised per ECN EOS0057	08–23–93	CM–GSR

Revision Record Continued on Sheet _____

	Contract No. NAS5–32500	MARTIN MARIETTA — Martin Marietta Astro Space, East Windsor, NJ, Valley Forge, PA
(signature on file)	Written C. Wilda Date 04–08–93	Interface Control Drawing, Earth Observing System AM Spacecraft to Moderate Resolution Imaging Spectroradiometer
(signature on file)	Approved N. Koepp–Baker Date 04–08–93	
	Approved Date	Size A — Code Ident No. 49671 — 20008840
(signature on file)	Issued G. Rauscher Date 04–08–93	Sheet 1 of 3

Top Assembly Drawing,
Earth Observing System AM Spacecraft, 20008500G1

Interface Control Drawing,
Earth Observing System AM Spacecraft to
Moderate Resolution Imaging Spectroradiometer, 20008840

- Interface Control Drawing, Mechanical, Drawing,
  Earth Observing System AM Spacecraft to
  Moderate Resolution Imaging Spectroradiometer, 20008841
- Interface Control Drawing, Mechanical, Tables,
  Earth Observing System AM Spacecraft to
  Moderate Resolution Imaging Spectroradiometer, 20008842
- Interface Control Drawing, Thermal
  Earth Observing System AM Spacecraft to
  Moderate Resolution Imaging Spectroradiometer, 20008843
- Interface Control Drawing, Electrical, Schematic,
  Earth Observing System AM Spacecraft to
  Moderate Resolution Imaging Spectroradiometer, 20008844
- Interface Control Drawing, Electrical, Tables,
  Earth Observing System AM Spacecraft to
  Moderate Resolution Imaging Spectroradiometer, 20008845
- Interface Control Drawing, Integration and Test
  Earth Observing System AM Spacecraft to
  Moderate Resolution Imaging Spectroradiometer, 20008846
- Interface Control Drawing, Command and Telemetry
  Earth Observing System AM Spacecraft to
  Moderate Resolution Imaging Spectroradiometer, 20008847

Figure 1. Drawing Tree

Table I. ICD Revision Status

20008841 MICD Drawing		20008842 MICD Tables		20008843 TICD		20008844 EICD Schematic		20008845 EICD Tables		20008846 I&T ICD		20008847 C&DH ICD	
Issue	Date	Issue	Date	Issue	Date	Issue	Date	Issue	Date	Issue	Date	Issue	Date
Initial	08-12-93	Initial	04-08-93	Initial	06-07-93			Initial	08-12-93				

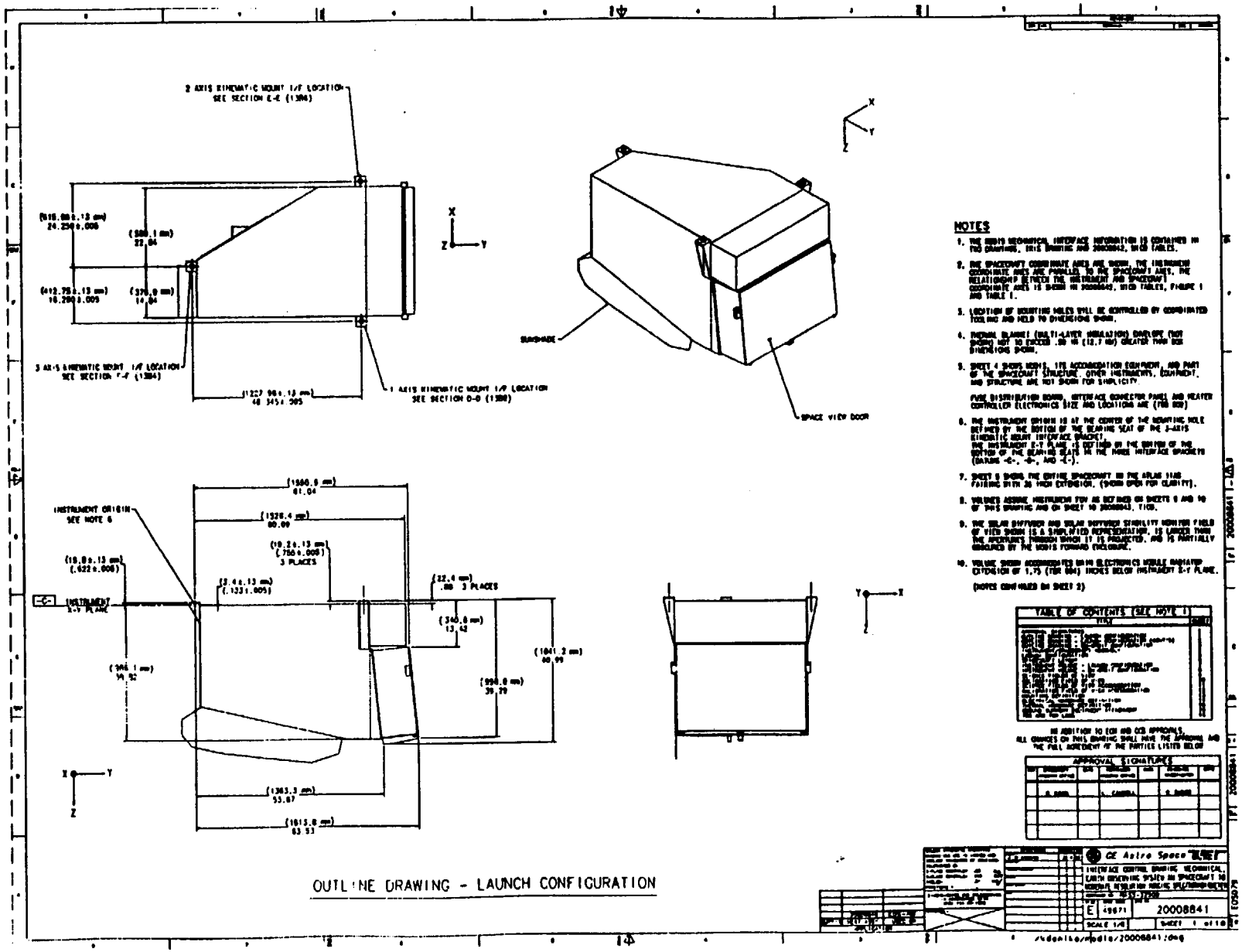

20008841
30 August 1993

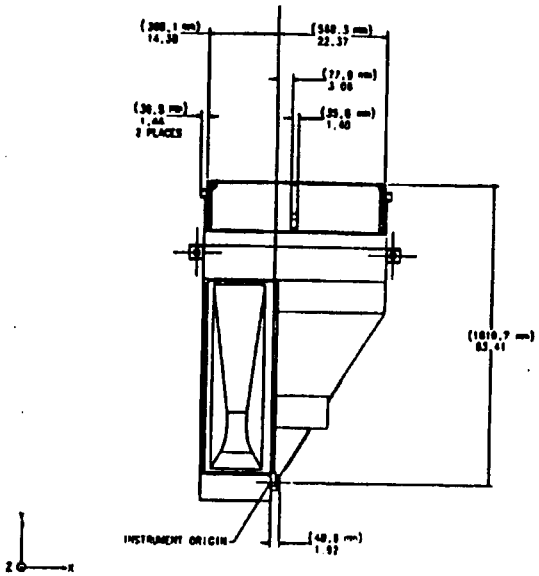

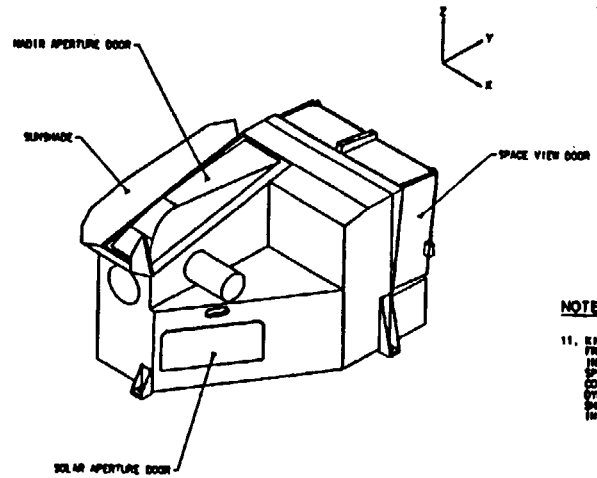

NOTES: (CONTINUED)

11. KINEMATIC MOUNT ACCOMMODATES BEARING ROTATION FROM NOMINAL POSITION AS FOLLOWS:
INSTRUMENT CONTRIBUTION: 1.50°
SPACECRAFT CONTRIBUTION: 1.75°
COMBINED DEFORMATIONS, INCLUDING THERMAL DISTORTION, DYNAMIC DEFLECTION, AND MANUFACTURING TOLERANCES, SHALL NOT CAUSE BEARING TO EXCEED THIS ROTATION IN ANY ROTATION.

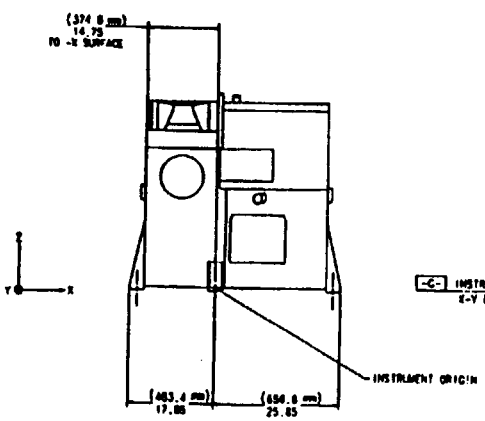

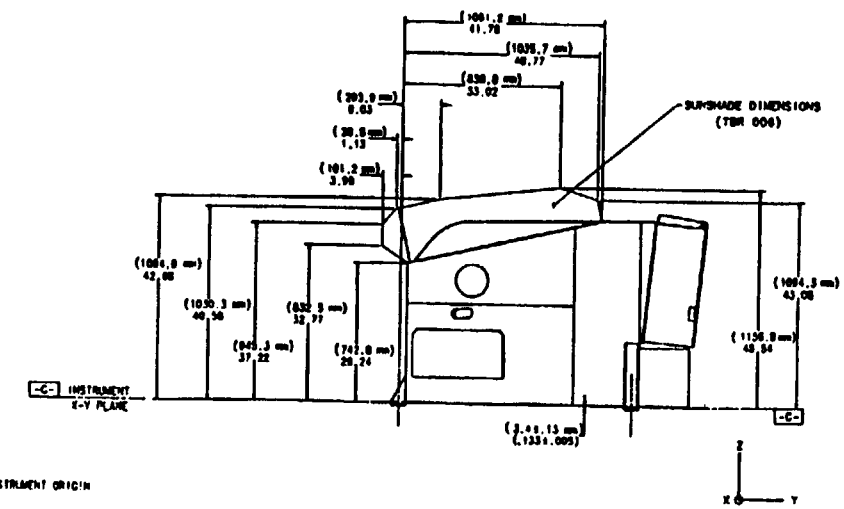

OUTLINE DRAWING - LAUNCH CONFIGURATION (CONT'D)

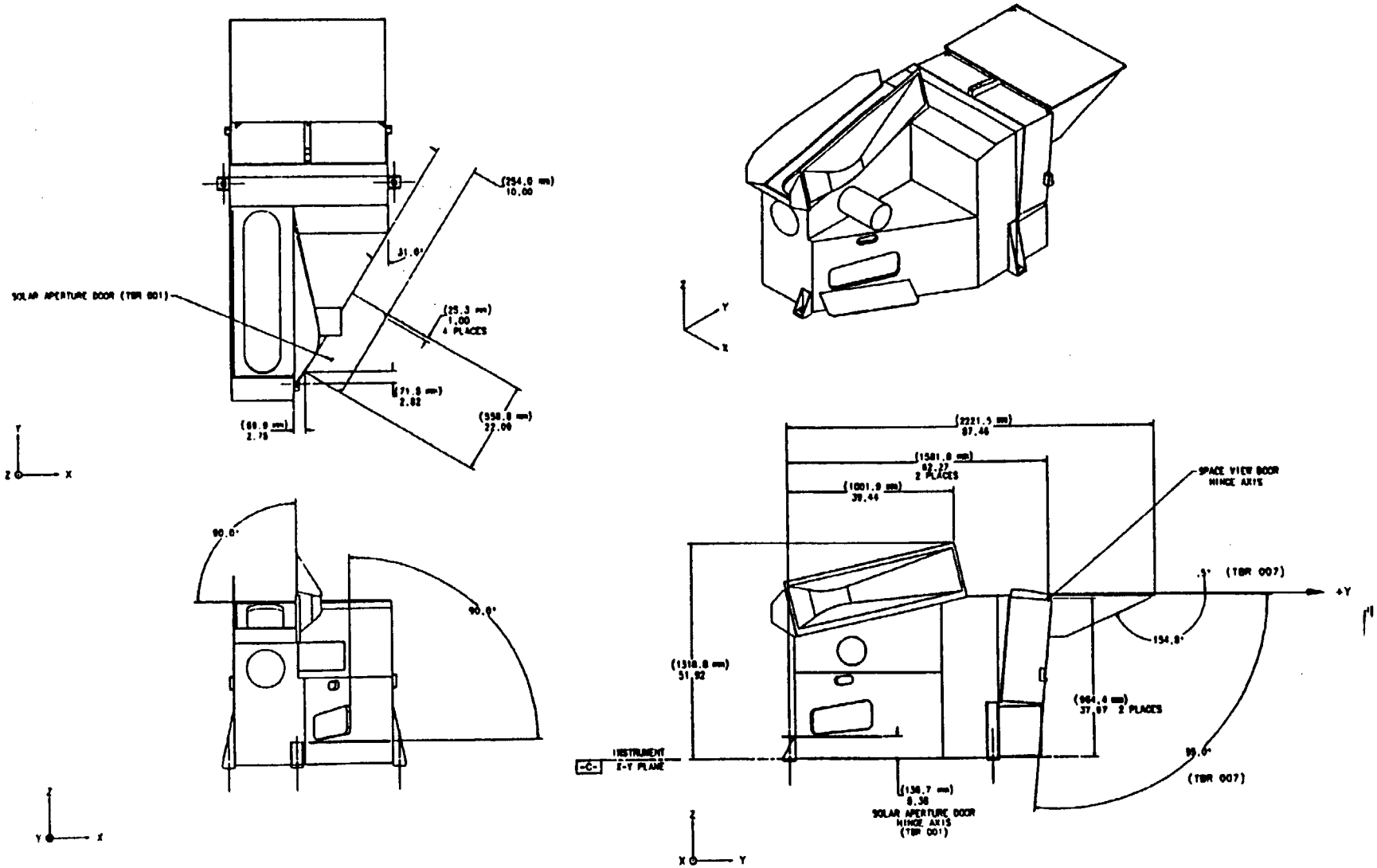

OUTLINE DRAWING - ON-ORBIT CONFIGURATION

20008841
30 August 1993

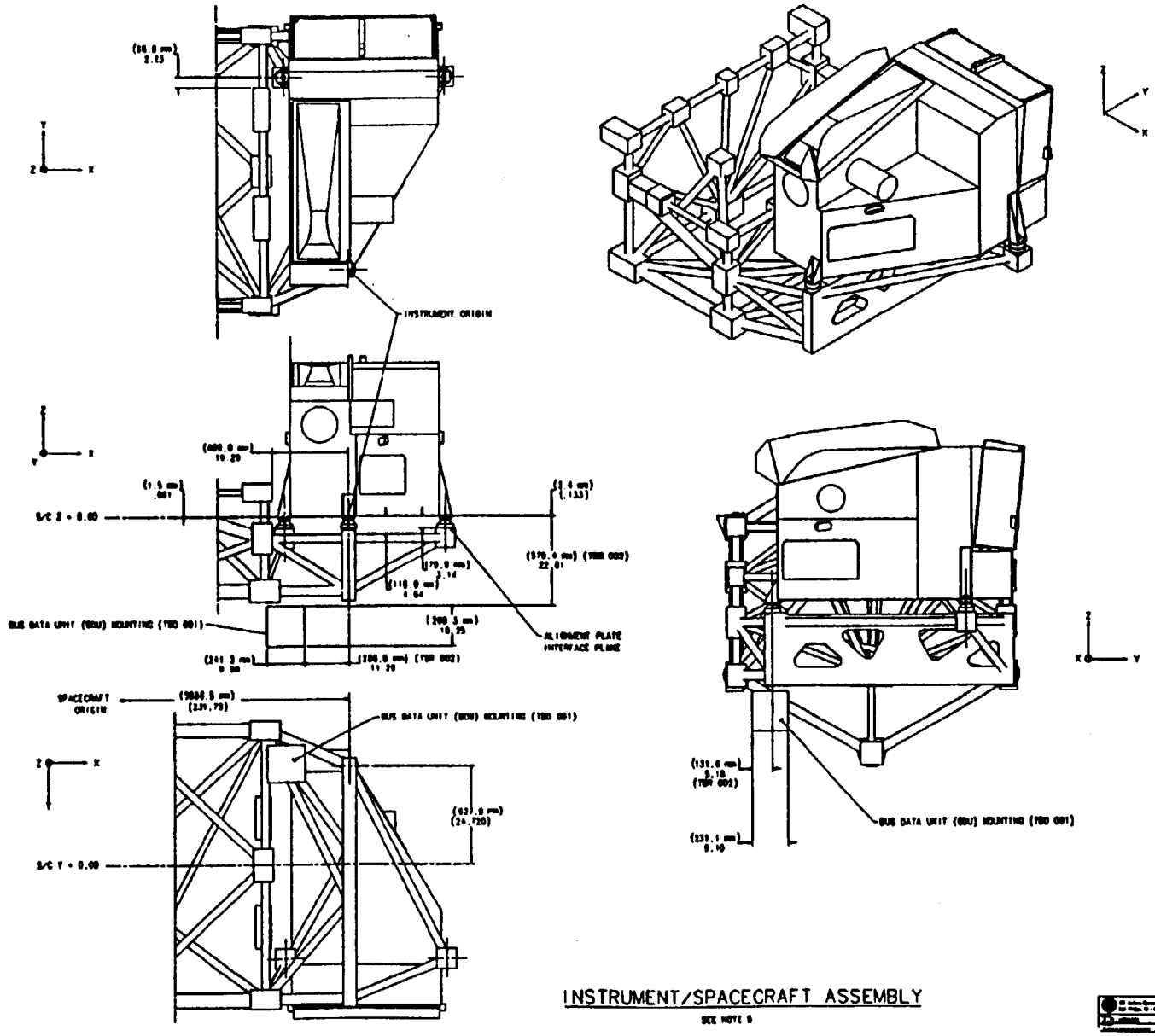

INSTRUMENT/SPACECRAFT ASSEMBLY

SEE NOTE 5

E	49671		20008841
SCALE 1:10			SHEET 4

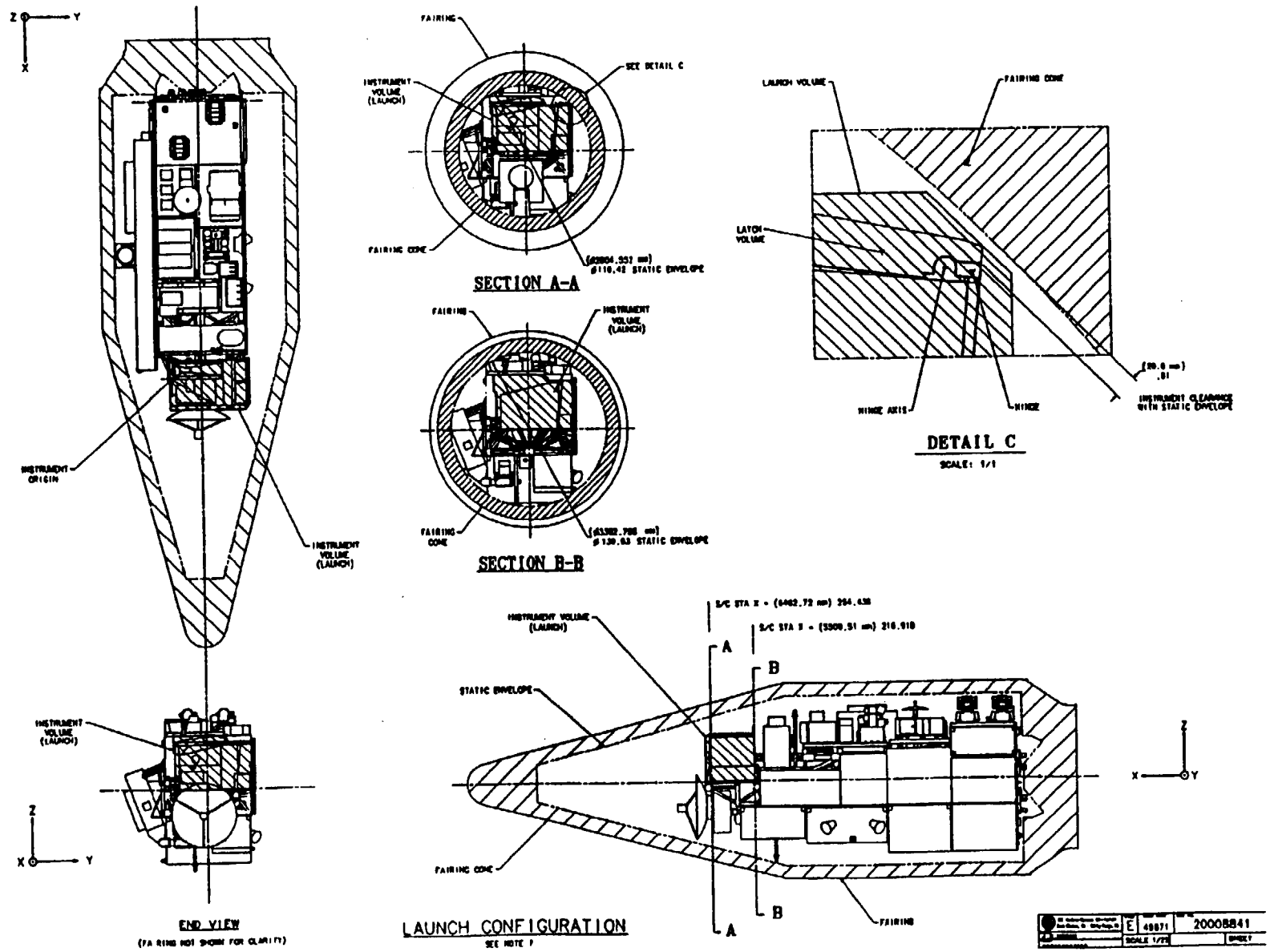

20008841
30 August 1993

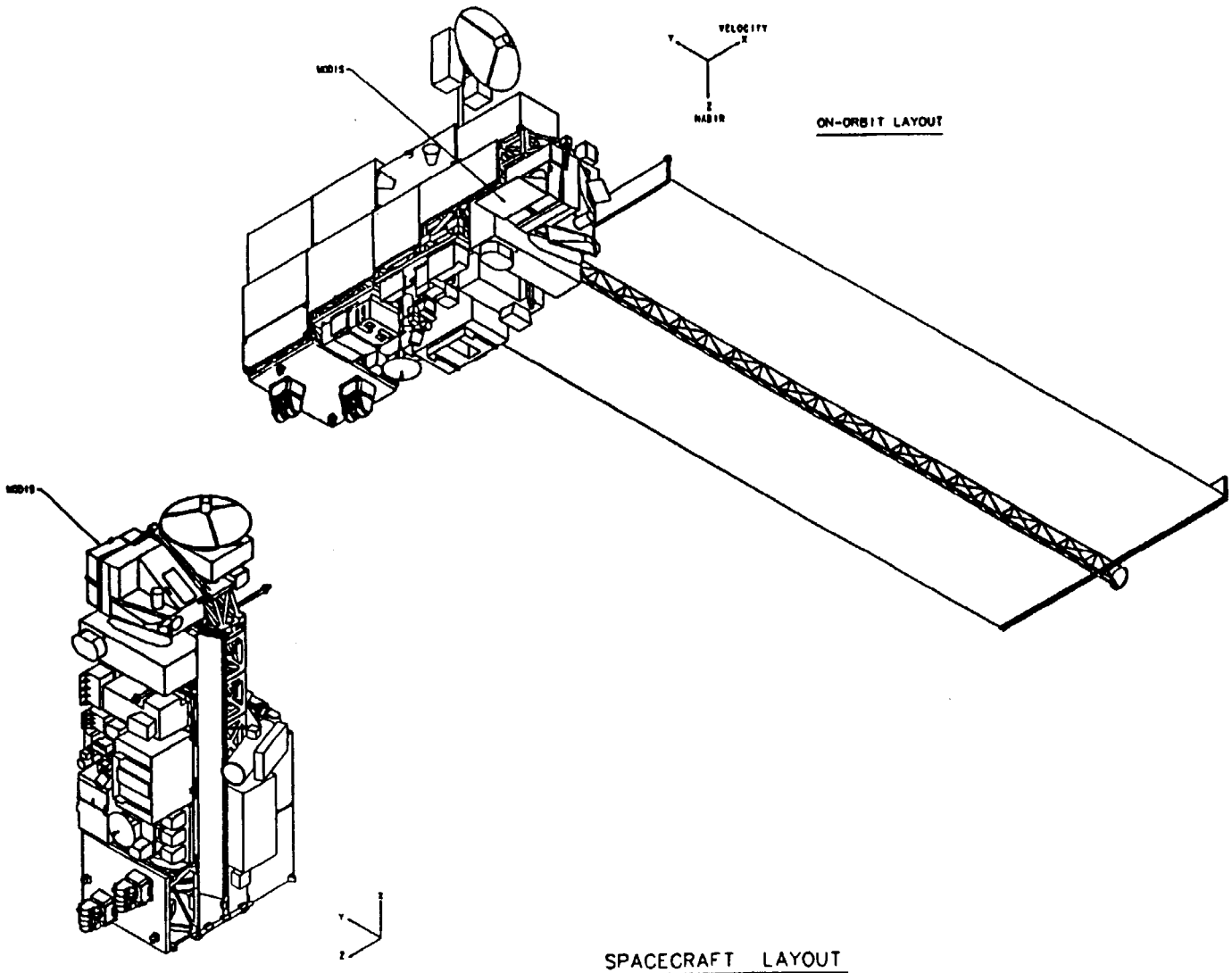

SPACECRAFT LAYOUT

	E	49671	20008841
	SCALE 1/100		SHEET 6

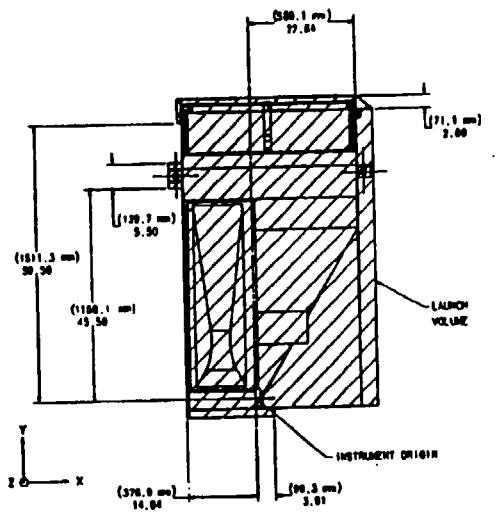

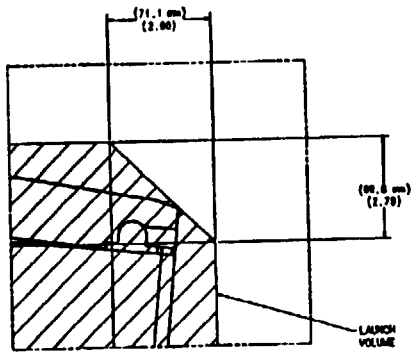

DETAIL J

SCALE: 1/1

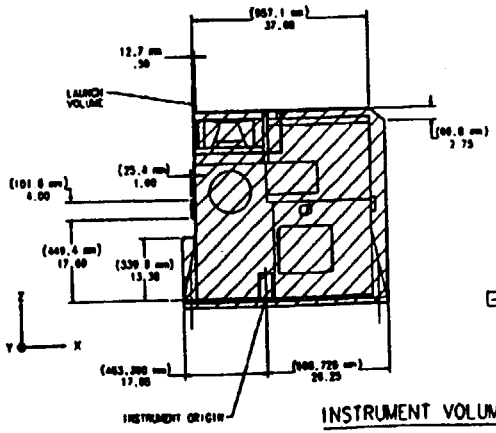

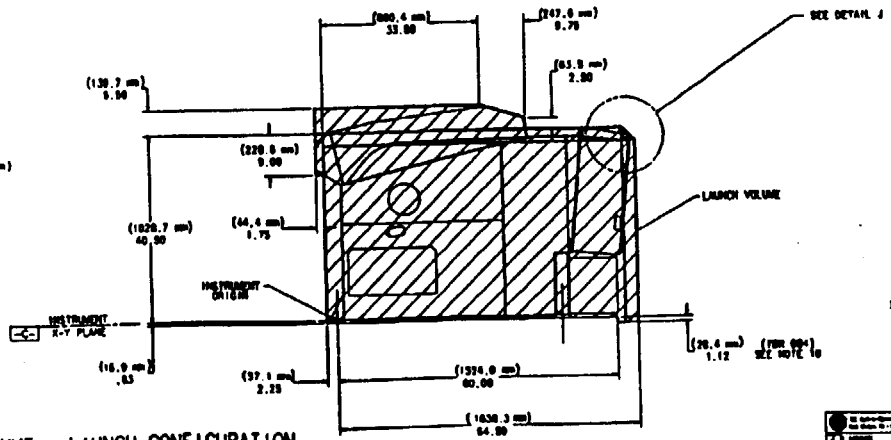

INSTRUMENT VOLUME - LAUNCH CONFIGURATION

	E	40671	20008841
	SCALE 1/6		SHEET

20008841
30 August 1993

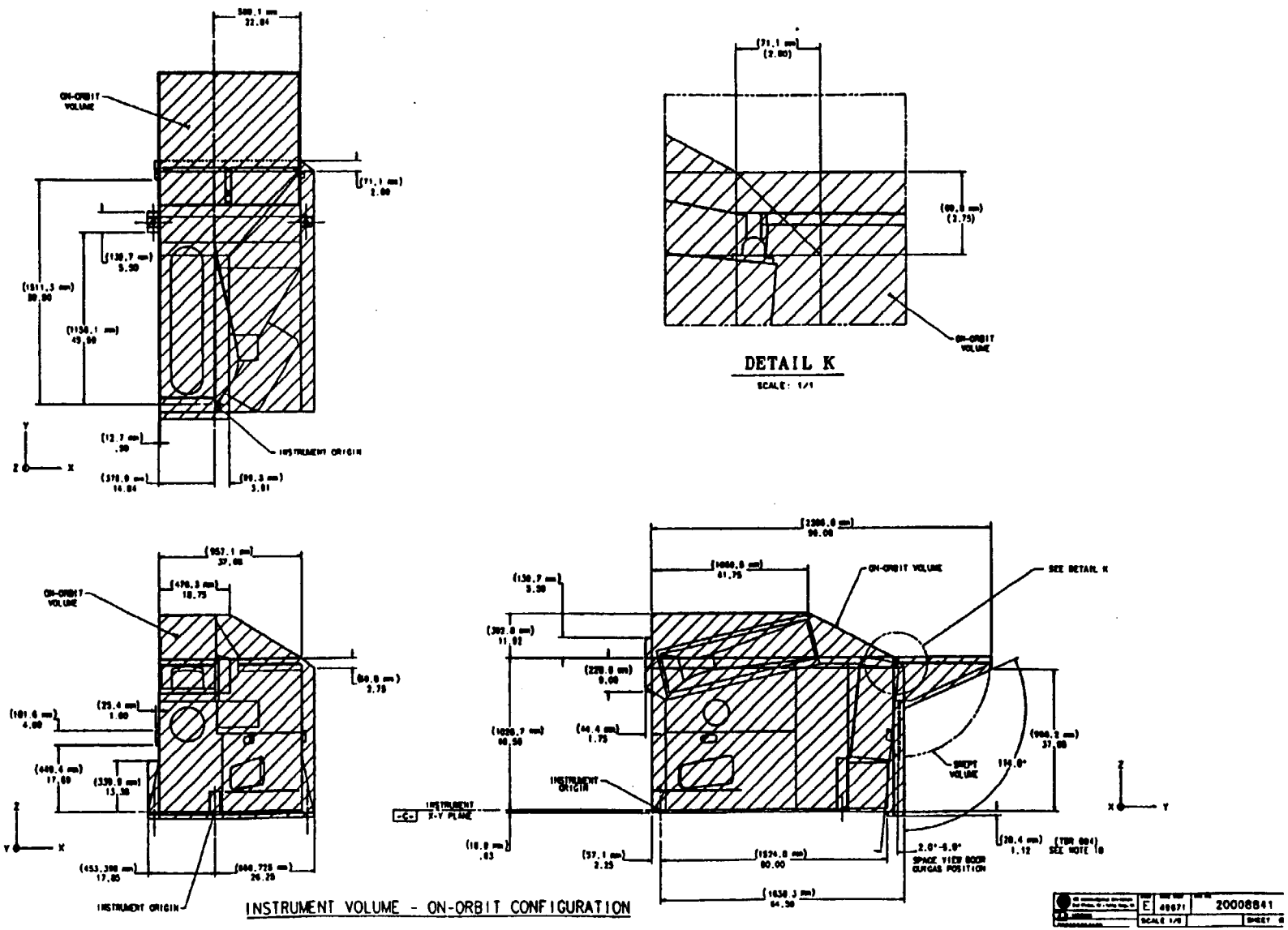

INSTRUMENT VOLUME - ON-ORBIT CONFIGURATION

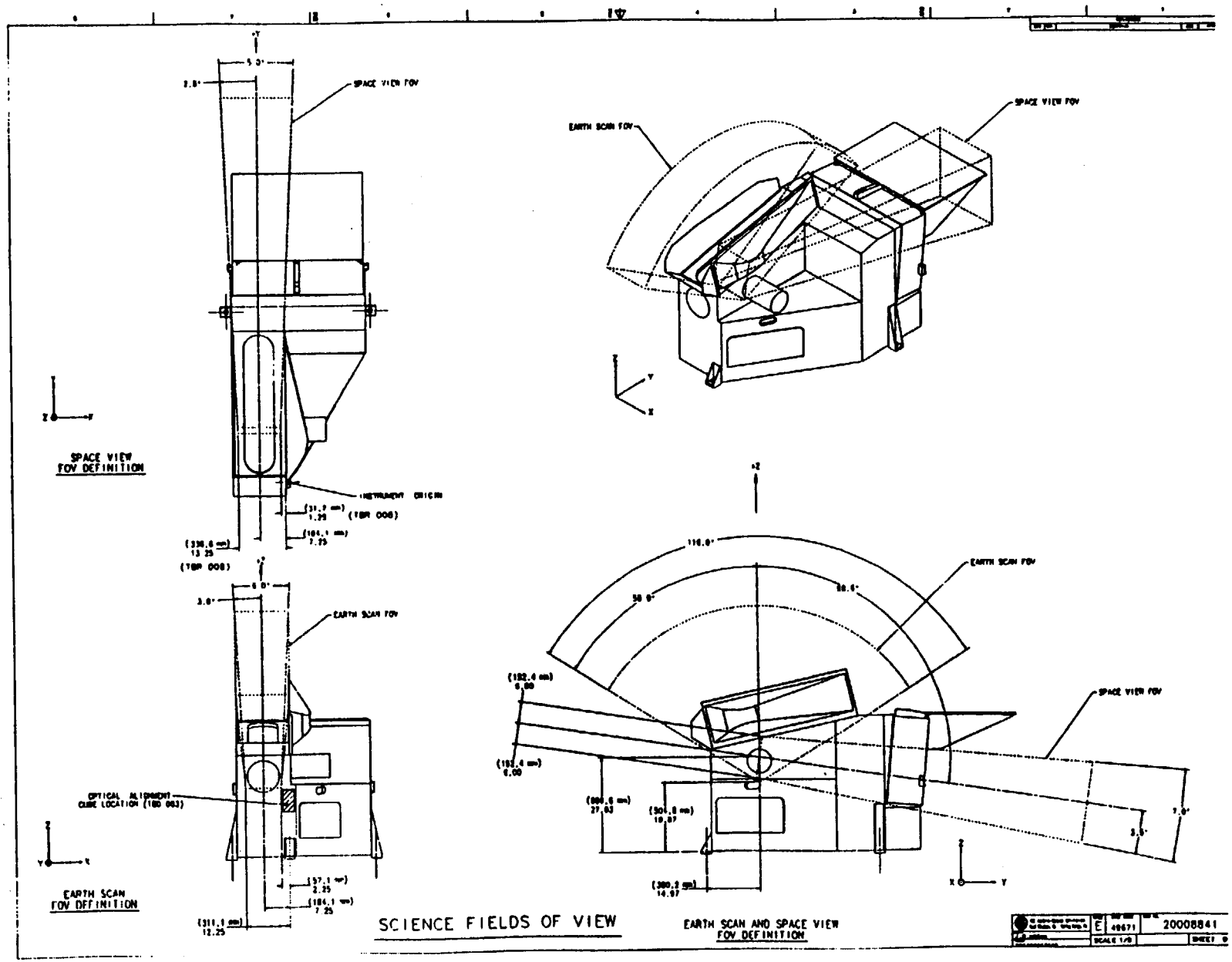

20008841
30 August 1993

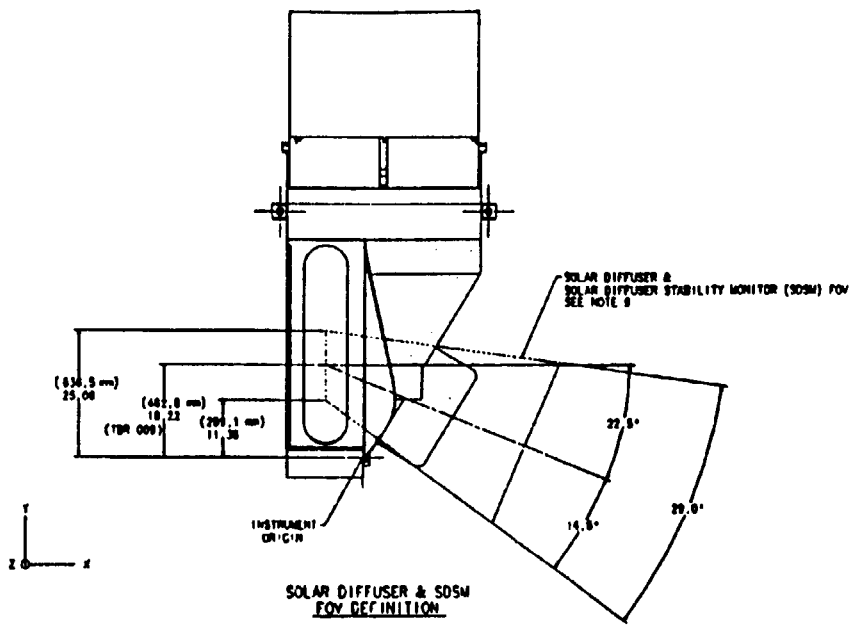

SOLAR DIFFUSER & SDSM
FOV DEFINITION

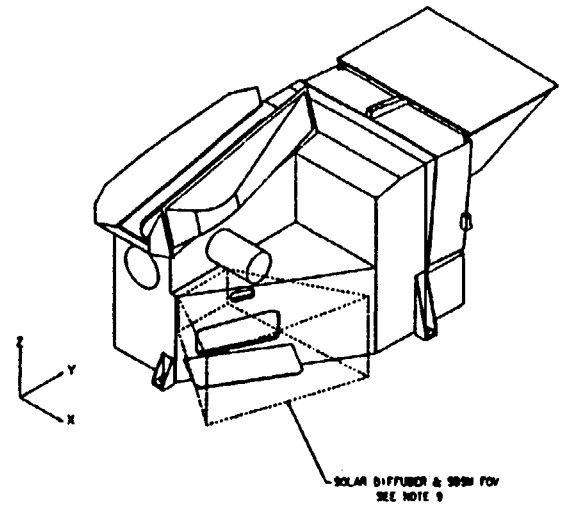

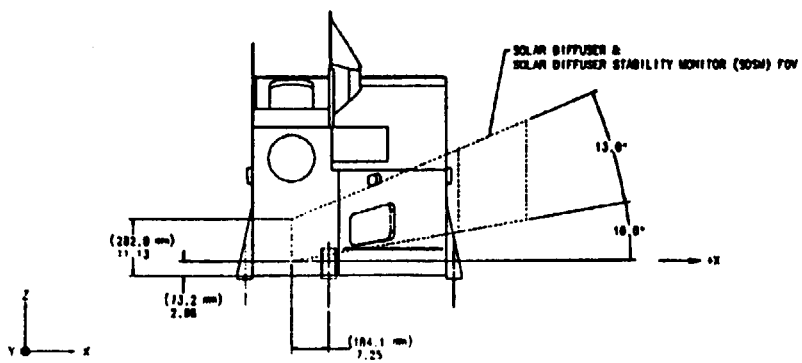

SOLAR DIFFUSER & SDSM
FOV DEFINITION

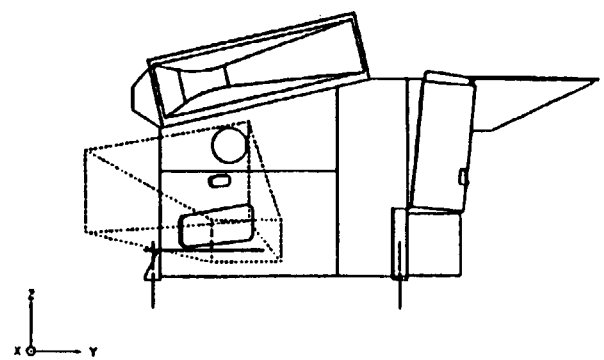

CALIBRATION FIELD OF VIEW

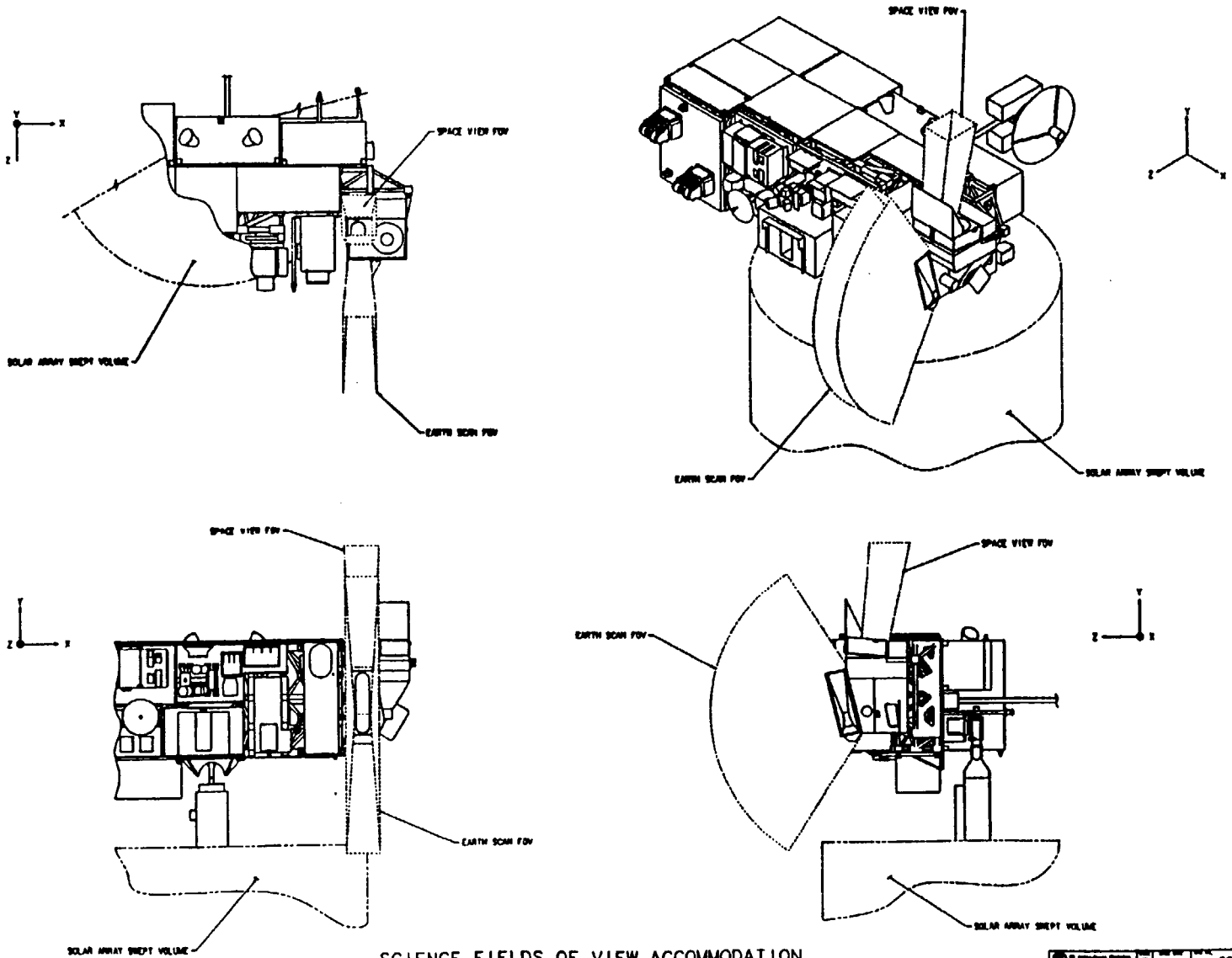

SCIENCE FIELDS OF VIEW ACCOMMODATION

	E	49671	20008841
	SCALE -/-		SHEET 1

20008841
30 August 1993

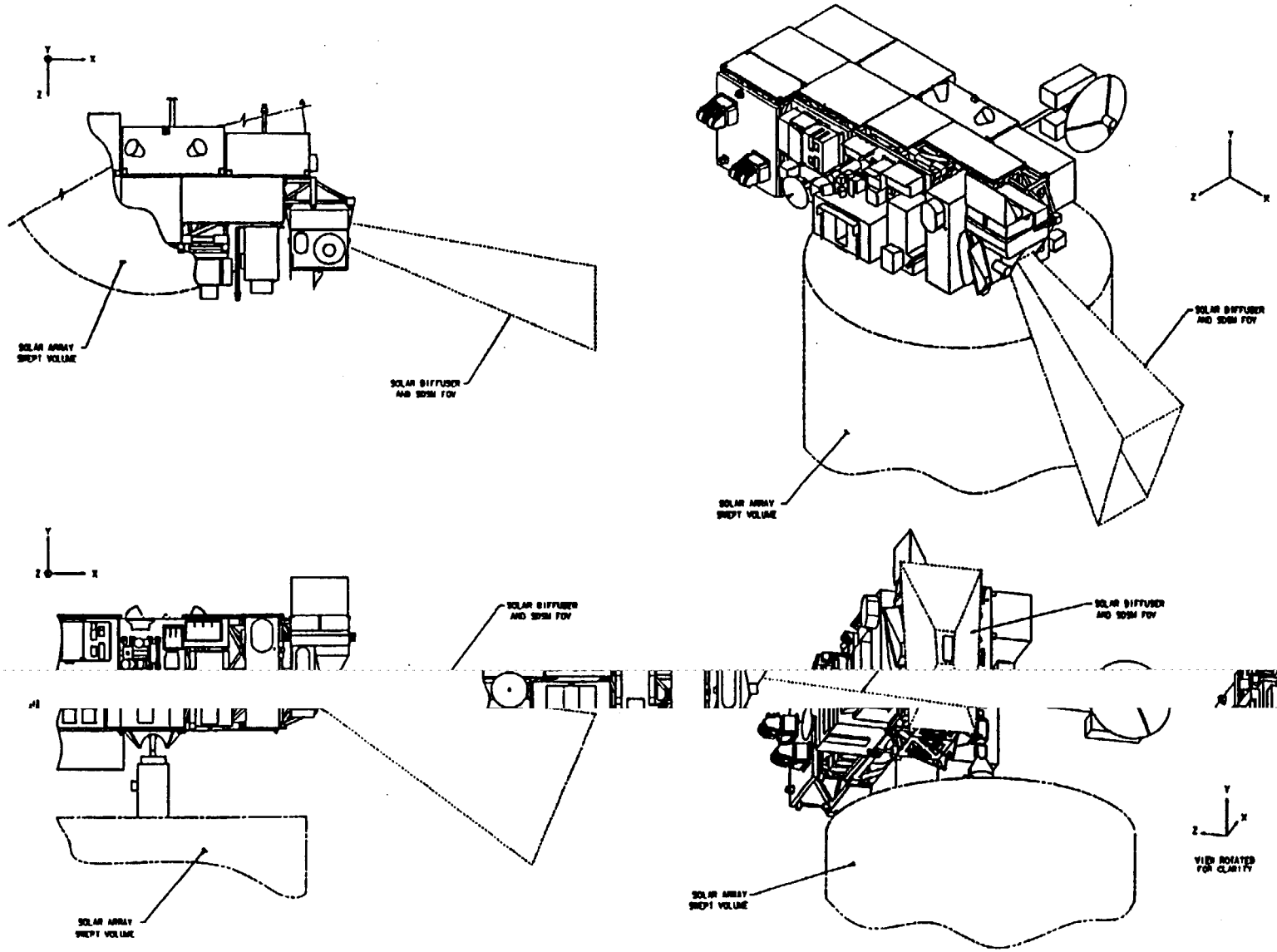

CALIBRATION FIELD OF VIEW ACCOMMODATION

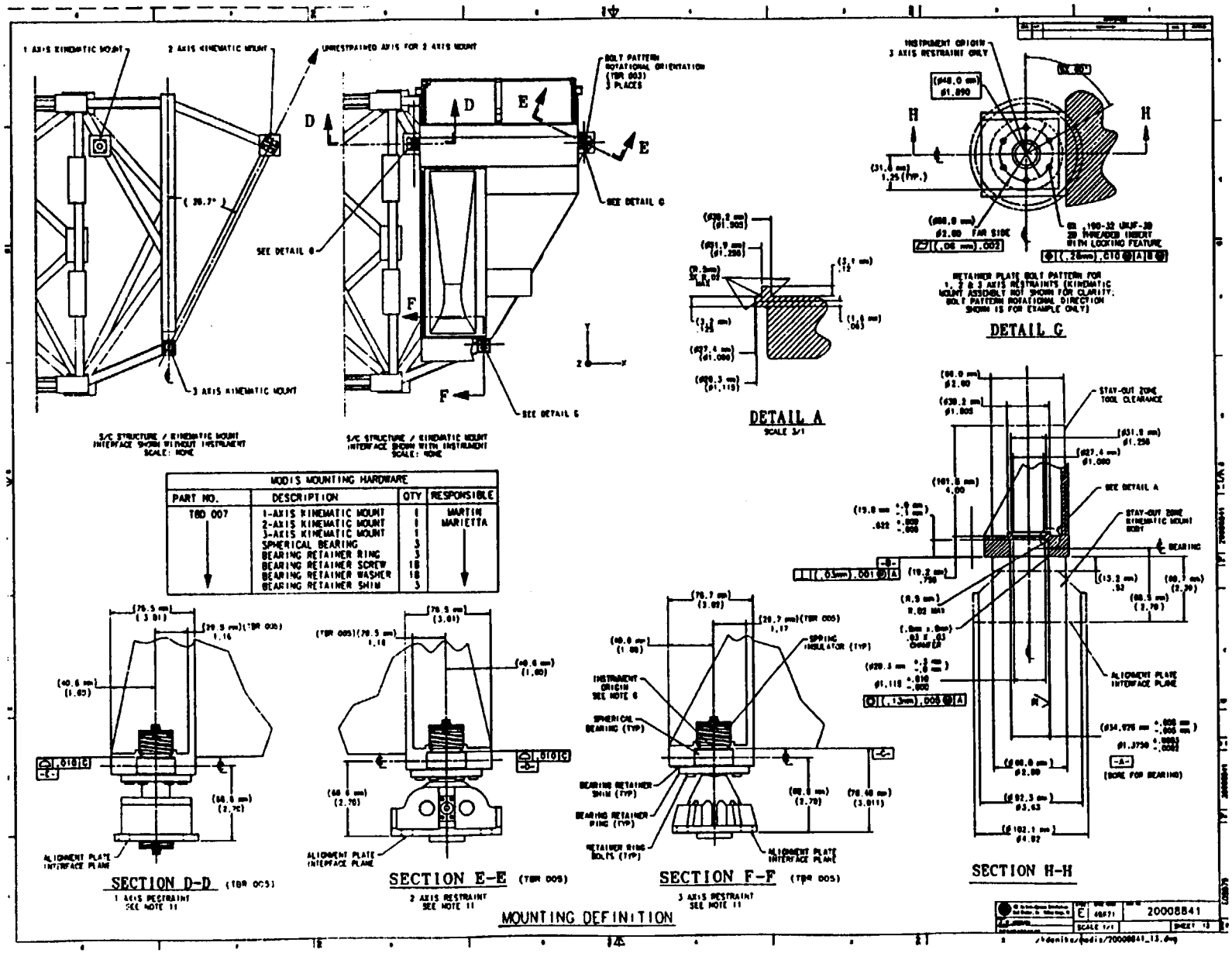

MODIS MOUNTING HARDWARE			
PART NO.	DESCRIPTION	QTY	RESPONSIBLE
TBD 007	1-AXIS KINEMATIC MOUNT	1	MARTIN MARIETTA
	2-AXIS KINEMATIC MOUNT	1	
	3-AXIS KINEMATIC MOUNT	1	
	SPHERICAL BEARING	3	
	BEARING RETAINER RING	3	
	BEARING RETAINER SCREW	18	
	BEARING RETAINER WASHER	18	
	BEARING RETAINER SHIM	3	

20008841
30 August 1993

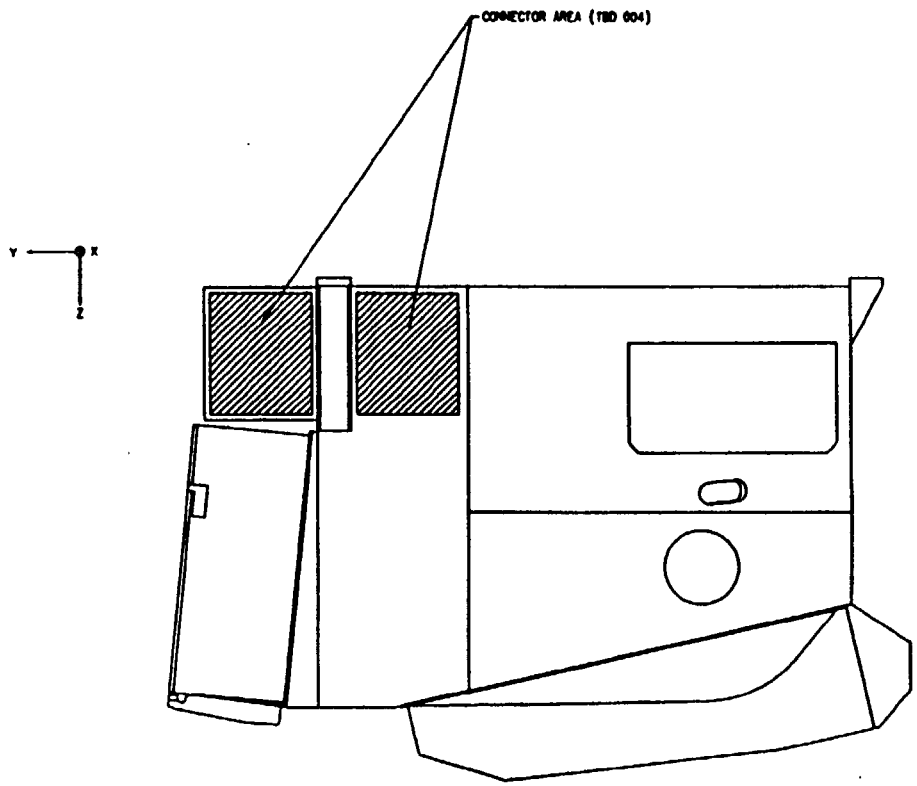

ELECTRICAL HARDWARE DEFINITION

(TBD 005)

SHEET 15 WILL DESCRIBE THE MODIS THERMAL BLANKETS AND THE CLOSEOUT BLANKETS BETWEEN THE MODIS AND SPACECRAFT THERMAL BLANKETS. EXTERIOR HEATER LOCATIONS WILL BE IDENTIFIED.

THERMAL HARDWARE DEFINITION

TBD LOG

ITEM	SHEET	ZONE	SUBJECT	RESPONSIBLE	DUE
TBD 001	4	D6, D6 C4	BDU MOUNTING (3 PLACES)	C. WILDA (MARTIN MARIETTA)	S/C PDR -13 WKS
TBD 002	1	E2	PDU, IC & HOK SIZE AND LOCATION	C. WILDA (MARTIN MARIETTA)	S/C PDR -13 WKS
TBD 003	9	B7	OPTICAL ALIGNMENT CUBE LOCATION	W. CUSHMAN (SBRC)	S/C PDR -13 WKS
TBD 004	14	E6	CONNECTOR AREA	W. CUSHMAN (SBRC)	S/C PDR -13 WKS
TBD 005	15	-	THERMAL HARDWARE DEFINITION	C. WILDA (MARTIN MARIETTA)	S/C PDR -26 WKS
TBD 006	16	-	GROUND SUPPORT EQUIPMENT ATTACHMENT DEFINITION	W. CUSHMAN (SBRC)	S/C PDR -13 WKS
TBD 007	13	D7	MOUNTING HARDWARE PART NUMBERS	C. WILDA (MARTIN MARIETTA)	S/C PDR -13 WKS

TBR LOG

ITEM	SHEET	ZONE	SUBJECT	RESPONSIBLE	DUE
TBR 001	3	E6, B4	SOLAR APERTURE DOOR & HINGE AXIS (2 PLACES)	W. CUSHMAN (SBRC)	S/C PDR -13 WKS
TBR 002	4	D6, D6 C4	BDU LOCATION (3 PLACES)	C. WILDA (MARTIN MARIETTA)	S/C PDR -13 WKS
TBR 003	13	C4	BOLT PATTERN ROTATIONAL ORIENTATION	W. CUSHMAN (SBRC)	S/C PDR -13 WKS
TBR 004	1 2 8	D2 B3 B2	NEW RADIATOR EXTENSION (3 PLACES)	C. WILDA (MARTIN MARIETTA)	S/C PDR -13 WKS
TBR 005	13	A7, A5 A3, C7 C9, C3	INTERFACE BRACKET DIMENSIONS & DEFINITION (6 PLACES)	W. CUSHMAN (SBRC)	10/1/93
TBR 006	2	D2	SUNSHADE DIMENSIONS	C. WILDA (MARTIN MARIETTA)	10/1/93
TBR 007	3	B2 C2	SPACE VIEW DOOR OPENING ANGLES (2 PLACES)	C. WILDA (MARTIN MARIETTA)	10/1/93
TBR 008	8	D6 D7	SPACE VIEW FOV (2 PLACES)	C. WILDA (MARTIN MARIETTA)	10/1/93
TBR 009	10	E8	SOLAR DIFFUSER FOV LOCATION	C. WILDA (MARTIN MARIETTA)	10/1/93

(TBD 006)

SHEET 16 WILL DESCRIBE THE ATTACHMENT OF THE FOLLOWING INSTRUMENT GROUND SUPPORT EQUIPMENT:

VIBRATION/HANDLING FIXTURE
ROLL-OVER FIXTURE
MODIS SYSTEM FIXTURE
LIFTING SLING #1
LIFTING SLING #2
LIFTING SLING #3
MODIS BENCH TEST COOLER
CONTAMINATION CONTROL EQUIPMENT

GROUND SUPPORT EQUIPMENT ATTACHMENT

Next Assembly	Used on
20008840	EOS–AM

First Application
EOS–AM

Revisions		Rev	
Ltr	Description	Date	Approv
Initial Issue		04–08–93	CM–GS

Revision Record Continued on Sheet _____

Contract No.	NAS5–32500
Written	C. Wilda
Date	C. Wilda 4-8-93
Approved	N. Koepp–Baker
Date	N. Koepp-B
Approved	
Date	
Issued	G. Rauscher
Date	4/23/93

GE Astro Space

General Electric Company
East Windsor, N.J.
Valley Forge, Pa

Interface Control Drawing, Mechanical, Tables, Earth Observing System AM Spacecraft to Moderate Resolution Imaging Spectroradiomet

Size	Code Ident No.	
A	49671	20008842

Sheet 1 of 32

PURPOSE

The Mechanical Interface Control Drawing (MICD) Tables, 20008842, when executed, in conjunction with the MICD Drawing, 20008841, represent an agreement of the detailed implementation of the mechanical interface between the Earth Observing System (EOS) AM Spacecraft and the Moderate Resolution Imaging Spectroradiometer (MODIS). These two drawings, together with Thermal Interface Control Drawing (TICD), 20008843; the Electrical Interface Control Drawing (EICD) Schematic, 20008844; EICD Tables, 20008845; Integration and Test Interface Control Drawing (I&T ICD), 20008846; and Command and Data Handling Interface Control Drawing (C&DH ICD), 20008847; describe the details of the interfaces between the EOS–AM Spacecraft and MODIS. The top–level instrument Interface Control Drawing (ICD), 20008840, provides the instrument ICD tree and revision status for all sub–tier instrument ICDs.

SCOPE

The MICD Tables, in conjuction with the MICD Drawing, contain information necessary to develop the spacecraft configuration, for structural and mechanical studies, and during I&T for verification of installation and alignment. The MICD Tables describe the instrument mass properties, mechanisms, Finite Element Model (FEM), flight and launch accountability kit items, and alignment data. The MICD Drawing contains the instrument component outline drawings; science and calibration fields of view; mounting, electrical, and thermal hardware definition, and instrument ground support equipment attachment.

Approval Signatures

IN ADDITION TO ECN AND CCB APPROVALS, ALL CHANGES ON THIS DRAWING SHALL HAVE THE APPROVAL AND THE FULL AGREEMENT OF THE PARTIES LISTED BELOW.

REV	Spacecraft Program Office	Date	Instrument Program Office	Date	Principal Investigator	Date
	(signature on file) J. Balch	02/04/93	(signature on file) L. Candell	03/12/93	(signature on file) W. Barnes	03/16/93

Size	Code Ident No.	
A	49671	20008842
		Sheet 2

Table of Contents

Section	Title	Sheet
	PURPOSE	2
	SCOPE	2
	Approval Signatures	2
	MICD TABLES	8

List of Figures

Figure No.	Title	Sheet
2a	Mechanism Profiles – Nadir Aperture Door Actuator	20
2b	Mechanism Profiles – Space View Door Actuator	21
2c	Mechanism Profiles – Scan Mirror Motor/Encoder	22
2d	Mechanism Profiles – Solar Aperture Door Actuator	23
2e	Mechanism Profiles – SDSM Fold Mirror Drive	24
2f	Mechanism Profiles – SRCA Entrance/Exit Slit Rotator	25
2g	Mechanism Profiles – SRCA Source Wheel Drive	26
2h	Mechanism Profiles – SRCA Grating Positioner	27

List of Tables

Table No.	Title	Sheet
I	Reference Coordinate Systems	2
IIa	Mass Properties – Launch/Stowed Configuration	3
IIb	Mass Properties – On–Orbit Configuration	4
IIIa	Mechanism Characteristics – Nadir Aperture Door Actuator	5
IIIb	Mechanism Characteristics – Space View Door Actuator	6
IIIc	Mechanism Characteristics – Scan Mirror Motor/Encoder	7
IIId	Mechanism Characteristics – Solar Aperture Door Actuator	8
IIIe	Mechanism Characteristics – SDSM Fold Mirror Drive	9
IIIf	Mechanism Characteristics – SRCA Entrance/Exit Slit Rotator	10
IIIg	Mechanism Characteristics – SRCA Source Wheel Drive	11
IIIh	Mechanism Characteristics – SRCA Grating Positioner	12
IV	Finite Element Model	21
V	MODIS Flight Items	22
VI	Launch Accountability Kit	23
VII	Alignment Data	24
VIII	Reference Documents	25

TBD LOG

ITEM	SECTION	PAGE	SUBJECT	RESPONSIBLE	DUE
TBD 001	Figure 1	9	Launch vehicle coordinate system (3 places)	C. Wilda (GE)	Launch vehicle announcement + 26 wks
TBD 002	Table I	9	Launch vehicle coordinates of MODIS (3 places)	C. Wilda (GE)	Launch vehicle announcement + 26 wks
TBD 003	Table IIa Table IIb	10 11	Inertia matrix resolution (2 places)	W. Cushman (SBRC)	03–31–93
TBD 004	Table IIb	11	On–orbit configuration mass properties*	W. Cushman (SBRC)	03–31–93
TBD 005	Table IIIc	14	Dynamic and static imbalance (2 places)	W. Cushman (SBRC)	03–31–93
TBD 006	Table V	29	MODIS flight items	W. Cushman (SBRC)	MODIS CDR + 4 wks
TBD 007	Table VI	30	Launch accountability kit	W. Cushman (SBRC)	MODIS Delivery – 26 wks
TBD 008	Table VII	31	Alignment data	W. Cushman (SBRC)	MODIS Delivery + 4 wks
TBD 009	Table VII	31	Drill template alignment data (6 places)	W. Cushman (SBRC)	06–30–95

* Where the majority of the table information is TBD, the entire table has been identified as TBD in the table title. Table information will be filled in as it becomes available.

TBR LOG

ITEM	SECTION	PAGE	SUBJECT	RESPONSIBLE	DUE
TBR 001	Figure 2a	20	Torque orientation	W. Cushman (SBRC)	MODIS CDR + 4 wks
TBR 002	Figure 2b	21	Torque orientation	W. Cushman (SBRC)	MODIS CDR + 4 wks
TBR 003	Figure 2f Figure 2g Figure 2h	25 26 27	SRCA calibrator positions relative to MODIS origin (3 places)	W. Cushman (SBRC)	MODIS CDR + 4 wks

MICD TABLES

1. The relationship among the instrument, spacecraft, and launch vehicle coordinate systems is shown pictorially in Figure 1.

2. The conversion among coordinate systems at the instrument origin is shown in Table I.

3. Launch and on–orbit configuration mass properties are shown in Tables IIa and IIb.

4. The MODIS mechanisms are listed below. Mechanism characteristics are provided in Table III. Corresponding torque, linear force versus time, and angular momentum profiles are provided in the Figure 2 identified by the same lower case alpha character.
   a. Nadir Aperture Door Actuator
   b. Space View Door Actuator
   c. Scan Mirror Motor/Encoder
   d. Solar Aperture Door Actuator
   e. SDSM Fold Mirror Drive
   f. SRCA Entrance/Exit Slit Rotator
   g. SRCA Source Wheel Drive
   h. SRCA Grating Positioner

5. The finite element model which will be used by both the Instrument and Spacecraft Providers is identified in Table IV.

6. The instrument and associated spacecraft flight items are listed in Table V.

7. The contents of the launch accountability kit are identified in Table VI for both flight and non–flight items.

   The launch accountability kit contains each item not installed prior to shipment to the launch site and which must be installed before flight. Space is allocated for each item which must be removed before flight. Thus the launch accountability kit provides the means to verify that all items which must be installed before flight have been installed and all items which must be removed before flight have been removed.

8. The alignment offset among the instrument boresight, all alignment cubes, and the instrument and drill template mounting plane and hole pattern is shown in Table VII.

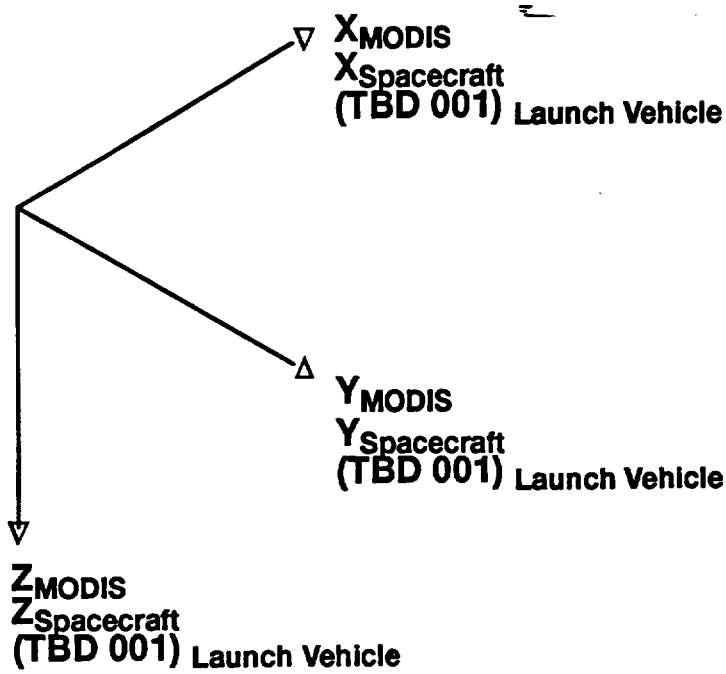

Figure 1. Coordinate Systems

Table I. Reference Coordinate Systems

Coordinate System	Coordinates (mm)		
MODIS (see Note 1)	$X_I =$ 0.0	$Y_I =$ 0.0	$Z_I =$ 0.0
Spacecraft	$X_{S/C} =$ 5886.5	$Y_{S/C} =$ −627.9	$Z_{S/C} =$ 14.4
Launch Vehicle	$X_{Launch\ Vehicle}$=(TBD 002)	$Y_{Launch\ Vehicle}$=(TBD 002)	$Z_{Launch\ Vehicle}$=(TBD 002)

Notes:

1. See 20008841, Sheet 1 for location of instrument origin.

Table IIa. Mass Properties – Launch/Stowed Configuration (See Note 2)

Mass (kg) (See Note 3)	(%) (E)stimated (C)alculated (M)easured	Estimated Center of Mass (mm) (See Notes 3 & 4)
235.2	52 E 48 C 0 M	X = 105.7 Y = 1063.2 Z = 416.1

Estimated Inertia Matrix (kg–m^2) ± (TBD 003)% (See Notes 3 & 5)		
I_{XX} = 55.95	I_{XY} = 3.11	I_{XZ} = –1.93
I_{YX} = 3.11	I_{YY} = 30.43	I_{YZ} = 3.96
I_{ZX} = –1.93	I_{ZY} = 3.96	I_{ZZ} = 46.16

Notes:

2. Launch/stowed configuration mass properties as of 30 September 1992.
3. Mass, center of mass, moments of inertia, and products of inertia in stowed configuration at end of life are the same as in launch/stowed configuration at beginning of life.
4. Center of mass is specified with respect to instrument origin. (See 20008841, Sheet 1.)
5. Instrument moments and products of inertia are specified about axes parallel to the instrument axes and passing through the instrument center of mass.

Table IIb. Mass Properties – On–Orbit Configuration (See Note 6) (TBD 004)*

Mass (kg) (See Note 6)	(%) (E)stimated (C)alculated (M)easured	Estimated Center of Mass (mm) (See Notes 7 & 4)
235.2	52 E 48 C 0 M	X = Y = Z =

Estimated Inertia Matrix (kg–m^2) ± (TBD 003)% (See Notes 7 & 5)		
I_{XX} =	I_{XY} =	I_{XZ} =
I_{YX} =	I_{YY} =	I_{YZ} =
I_{ZX} =	I_{ZY} =	I_{ZZ} =

Notes:

* Where the majority of the table information is TBD, the entire table has been identified as TBD in the table title. Table information will be filled in as it becomes available.

6. On–orbit (all doors deployed) configuraiton mass properties as of 30 September 1992.
7. Mass, center of mass, moments of inertia, and products of inertia in on–orbit configuration at end of life are the same as in on–orbit configuration at beginning of life.

Table IIIa. Mechanism Characteristics – Nadir Aperture Door Actuator

Operation	The Nadir Aperture Door Actuator operates to open the Nadir Aperture Door during initialization and operates to close and open the Nadir Aperture Door for transition to and from Safe and Survival modes (i.e., the Nadir Aperture Door is latched for launch, in the open position for all Science and Calibration modes, and in the close position for all other modes). In the event of failure to command the Nadir Aperture Door open, the Nadir Aperture Door Actuator is designed such that the Nadir Aperture Door can be permanently opened.
Mass being moved (kg) (M)easured, (C)alculated, (E)stimated	3.175 (E)
Inertia (kg–m^2)	0.183
Maximum impulse (N–m–sec)	0.0192
Finite element model node number	367007
Location and mechanism profiles	See Figure 2a

Table IIIb. Mechanism Characteristics – Space View Door Actuator

Operation	The Space View Door Actuator operates to open the Space View Door during outgas and initialization and operates to close and open the Space View Door for transition to and from Safe and Survival modes (i.e., the Space View Door is latched for launch, in the open position for all Science and Calibration modes, in the outgas position for Outgassing mode, and in the close position for all other modes). In the event of failure to command the Space View Door open, the Space View Door Actuator is designed such that the Space View Door can be permanently opened.
Mass being moved (kg) (M)easured, (C)alculated, (E)stimated	3.4 (E)
Inertia (kg–m^2)	0.327
Maximum impulse (N–m–sec)	0.0342
Finite element model node number	355116
Location and mechanism profiles	See Figure 2b

Table IIIc. Mechanism Characteristics – Scan Mirror Motor/Encoder

Operation	The Scan Mirror Motor/Encoder operates the Scan Mirror and controls its rotation during all Science and Calibration modes (i.e., the Scan Mirror is scanning during all Science and Calibration modes and off for all other modes).
Mass being moved (kg) (M)easured, (C)alculated, (E)stimated	4.5 (E)
Inertia (kg–m^2)	0.113
For continuously rotating parts	
Dynamic imbalance (kg–mm^2)	**(TBD 005)**
Static imbalance (kg–mm)	**(TBD 005)**
Residual momentum (N–m–sec)	0.24
Rate (rpm)	20.4
Finite element model node number	361342
Location and mechanism profiles	See Figure 2c

Table IIId. Mechanism Characteristics – Solar Aperture Door Actuator

Operation	The Solar Aperture Door Actuator operates to open and close the Solar Aperture Door and Screen during transition to and from Low and High Bi–directional Reflectance Distribution Function (BRDF) Solar Calibration modes. High BRDF mode consists of both door and screen open, is entered weekly, and lasts approximately 6 minutes. Low BFDF mode consists of door open and screen closed, is entered weekly, and lasts approximately 6 minutes. Both door and screen are latched for launch, in the open position for Solar Calibration mode, and in the closed position for all other modes. In the event of failure to command the Solar Aperture Door open, the actuator is designed such that the door can be permanently opened and the screen permanently closed.
Mass being moved (kg) (M)easured, (C)alculated, (E)stimated	1.2 (E)
Inertia (kg–m^2)	0.0194
Maximum impulse (N–m–sec)	0.0113
Finite element model node number	355349
Location and mechanism profiles	See Figure 2d

Table IIIe. Mechanism Characteristics – SDSM Fold Mirror Drive

Operation	The Solar Diffuser Stability Monitor (SDSM) Fold Mirror Drive operates the SDSM Fold Mirror and controls its position during Solar Calibration mode. Solar Calibration mode is entered two orbits per week and lasts approximately 6 minutes per orbit (i.e., the SDSM Fold Mirror is moved during Solar Calibration mode and off for all other modes).
Mass being moved (kg) (M)easured, (C)alculated, (E)stimated	0.0454 (E)
Inertia (kg–m^2)	5.5×10^{-6}
Maximum impulse (N–m–sec)	2.97×10^{-5}
Finite element model node number	367004
Location and mechanism profiles	See Figure 2e

Table IIIf. Mechanism Characteristics – SRCA Entrance/Exit Slit Rotator

Operation	The Spectroradiometric Calibration Assembly (SRCA) Entrance/Exit Slit Rotator operates during Spectroradiometric Calibration mode. Spectroradiometric Calibration mode is entered monthly and lasts approximately 75 minutes (i.e., the SRCA Entrance Slit Rotator is on during Spectroradiometric Calibration mode and off for all other modes).
Mass being moved (kg) (M)easured, (C)alculated, (E)stimated	0.068 (E)
Inertia (kg–m^2)	3.00×10^{-5}
Maximum impulse (N–m–sec)	3.14×10^{-6}
Finite element model node number	362001
Location and mechanism profiles	See Figure 2f

Table IIIg. Mechanism Characteristics – SRCA Source Wheel Drive

Operation	The SRCA Source Wheel Drive operates the SRCA Source Wheel and controls its position during Spectroradiometric Calibration mode. Spectroradiometric Calibration mode is entered monthly and lasts approximately 75 minutes (i.e., the SRCA Source Wheel is moved during Spectroradiometric Calibration mode and off for all other modes).
Mass being moved (kg) (M)easured, (C)alculated, (E)stimated	0.227 (E)
Inertia (kg–m^2)	2.7×10^{-4}
Maximum impulse (N–m–sec)	2.83×10^{-5}
Finite element model node number	362001
Location and mechanism profiles	See Figure 2g

Table IIIh. Mechanism Characteristics – SRCA Grating Positioner

Operation	The SRCA Grating Positioner operates the SRCA Grating and controls its position during Spectroradiometric Calibration mode. Spectroradiometric Calibration mode is entered monthly and lasts approximately 75 minutes (i.e., the SRCA Grating is moved during Spectroradiometric Calibration mode and off for all other modes).
Mass being moved (kg) (M)easured, (C)alculated, (E)stimated	0.163 (E)
Inertia (kg–m^2)	1.10×10^{-4}
Maximum impulse (N–m–sec)	1.152×10^{-5}
Finite element model node number	362001
Location and mechanism profiles	See Figure 2h

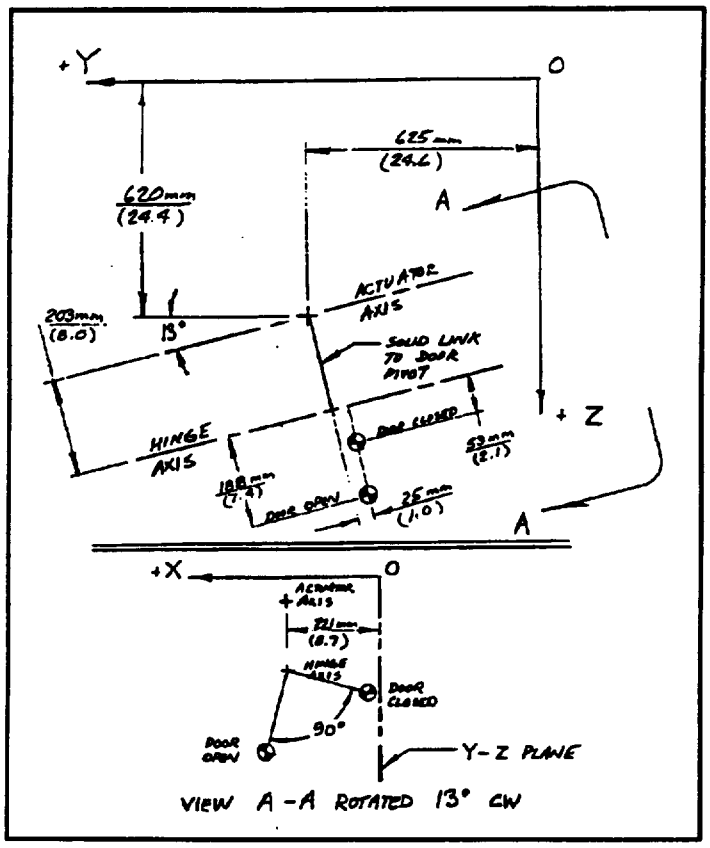

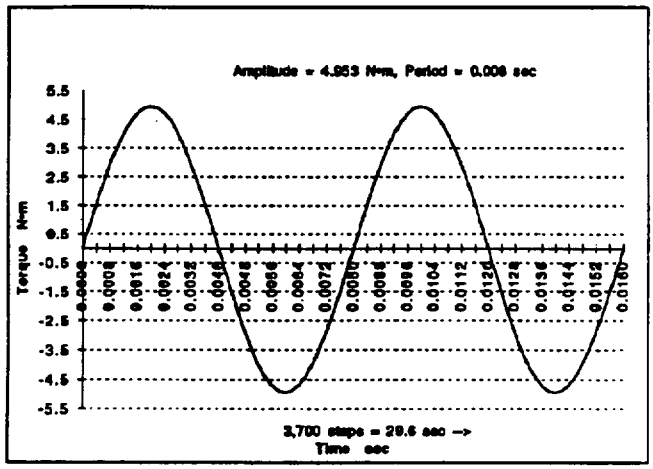

Notes:

8. Torque is assumed to be applied 100% on actuator axis **(TBR 001)**
9. O = MODIS origin
   ⊕ = Center of mass being moved

Figure 2a. Mechanism Profiles – Nadir Aperture Door Actuator

Size	Code Ident No.	
A	49671	20008842
		Sheet 20

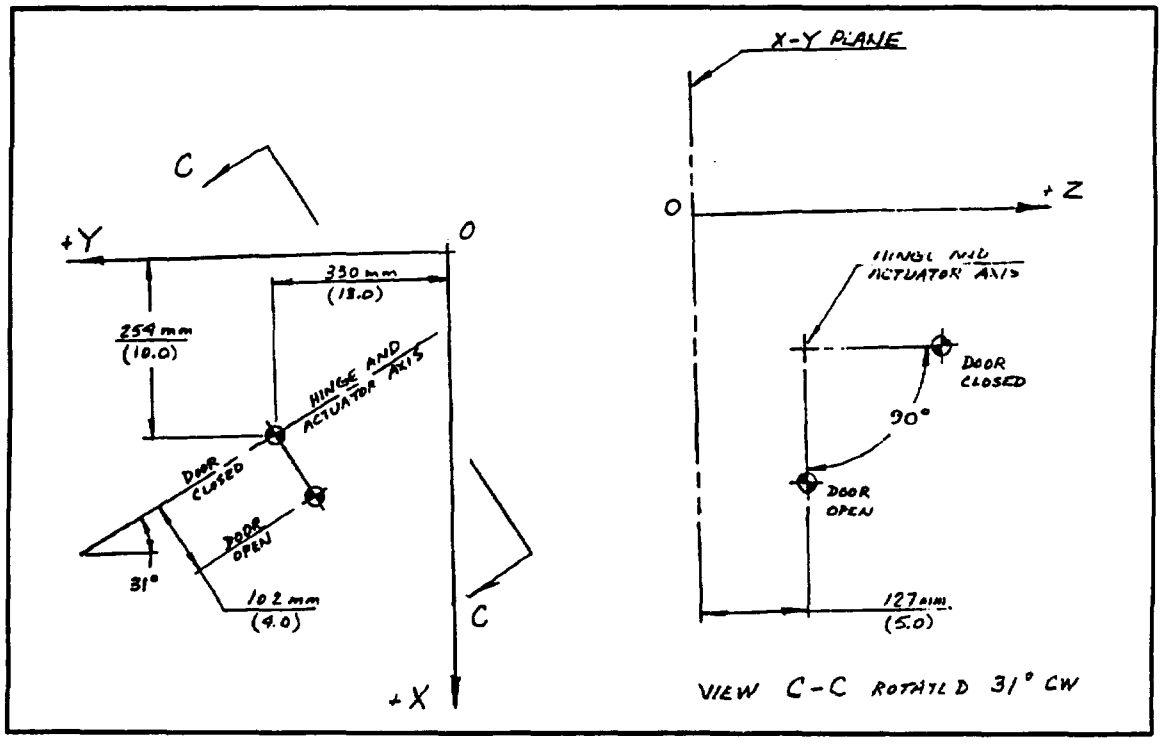

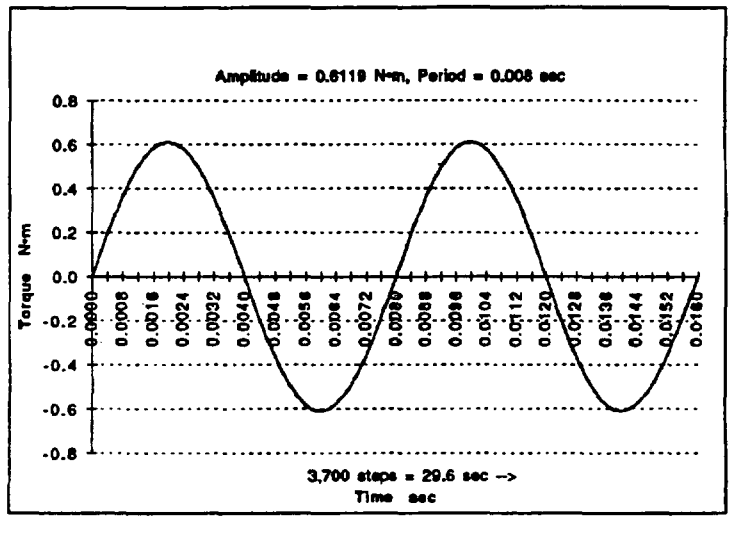

Notes:

14.O = MODIS origin

⊕ = Center of mass being moved

Figure 2d. Mechanism Profiles – Solar Aperture Door Actuator

Size	Code Ident No.	
A	49671	20008842
		Sheet 23

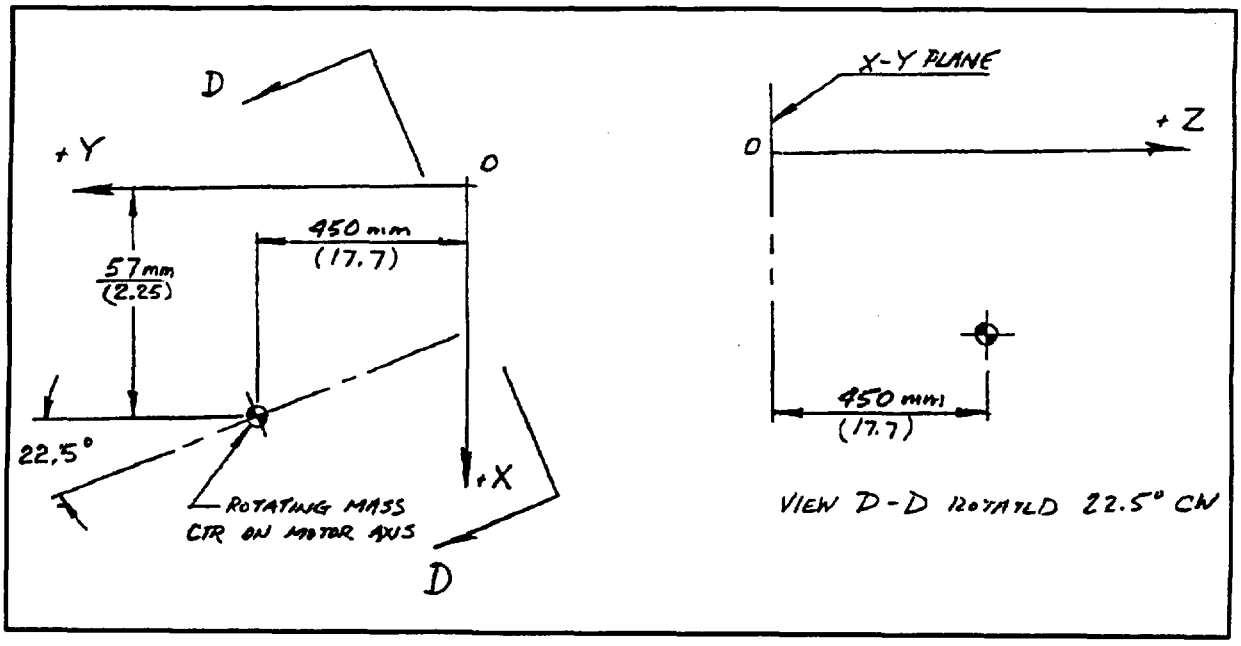

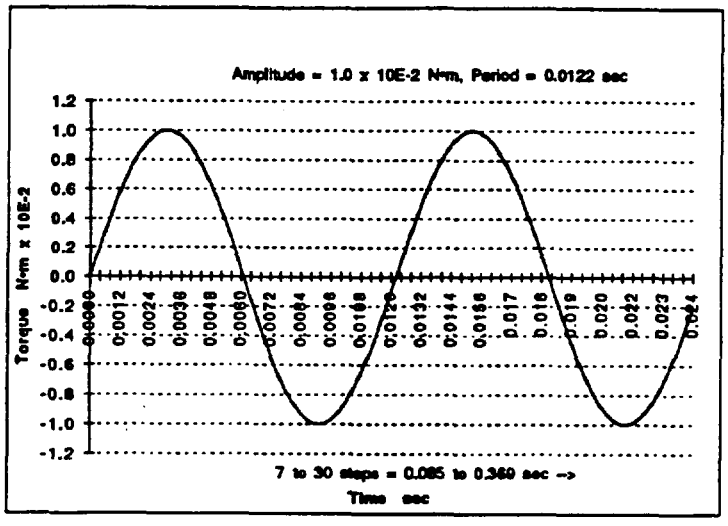

Notes:

15.O = MODIS origin

⊕ = Center of mass being moved

Figure 2e. Mechanism Profiles – SDSM Fold Mirror Drive

Size	Code Ident No.	
A	49671	20008842
		Sheet 24

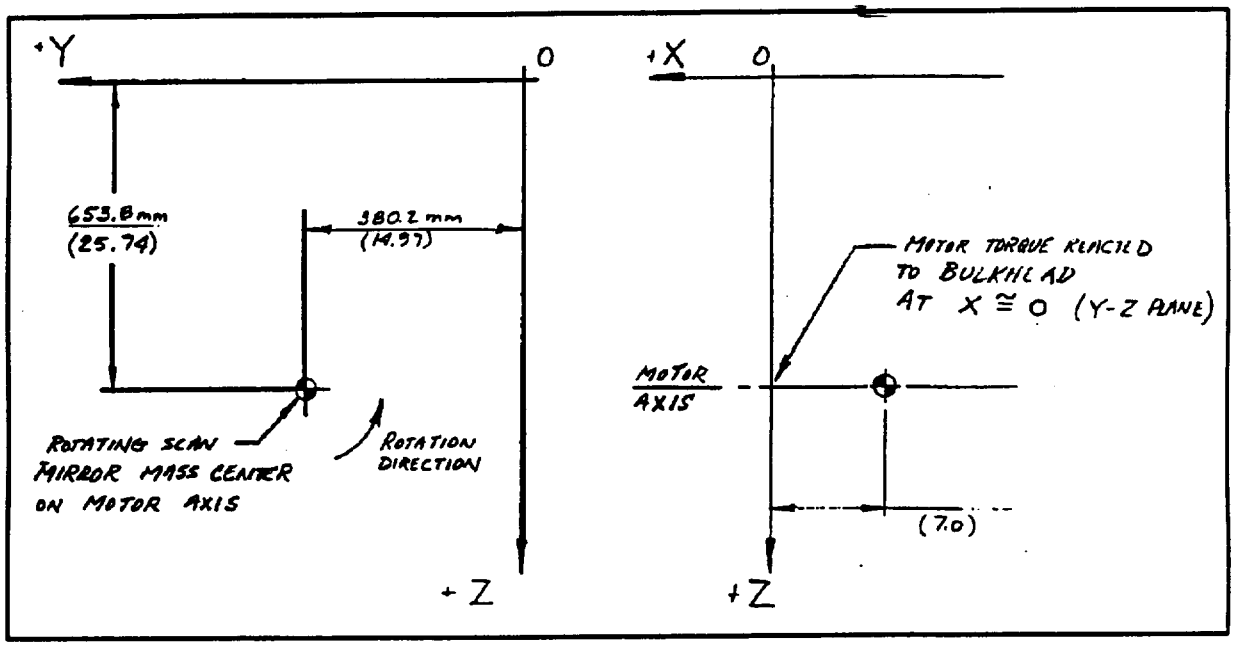

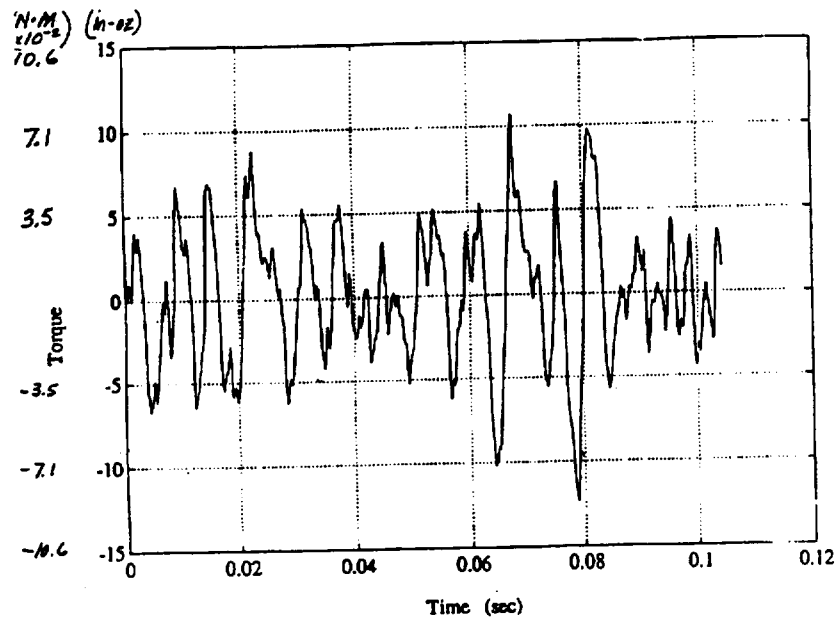

Notes:

12. The scan mirror will experience a start–up torque that varies from 0.42 Nm to 0.6 Nm, depending on motor shaft position. The start–up time is approximately 0.5 second, depending on initial position. Running torque variations are shown above.

13. O = MODIS origin
    ⊕ = Center of mass being moved

Figure 2c. Mechanism Profiles – Scan Mirror Motor/Encoder

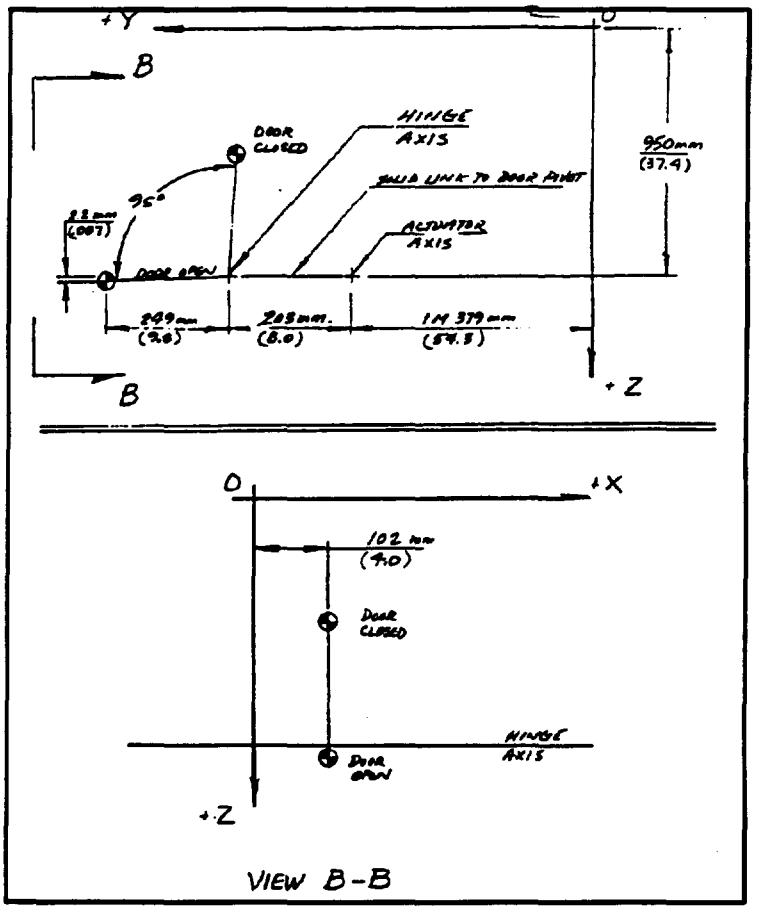

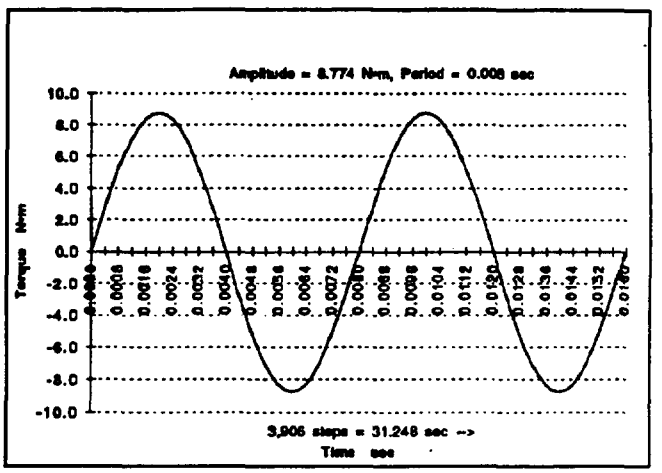

Notes:

10. Torque is assumed to be applied 100% on acutator axis **(TBR 002)**
11. O = MODIS origin
    ⊕ = Center of mass being moved

Figure 2b. Mechanism Profiles – Space View Door Actuator

Size	Code Ident No.	
A	49671	20008842
		Sheet 21

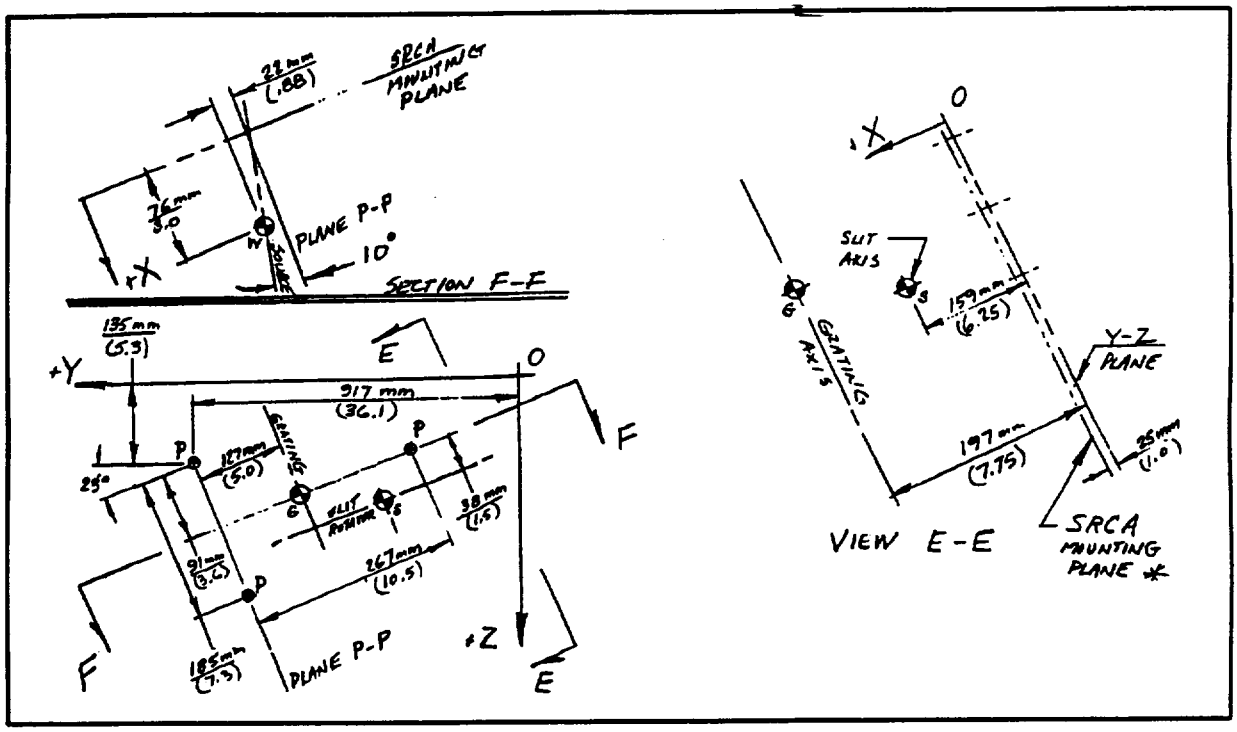

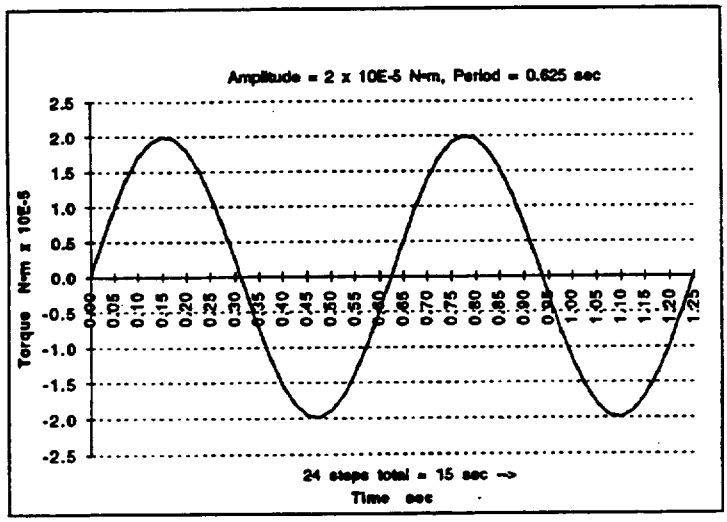

Notes:

16. All SRCA torques reacted to mounting points shown by $\oplus^P$. SRCA calibrator actuator positions relative to MODIS origin are approximate **(TBR 003).**

17. O = MODIS origin
    - $\oplus_G$ = Grating Positioner center of mass being moved
    - $\oplus_S$ = Slit rotator center of mass being moved
    - $\oplus_W$ = Source Wheel center of mass being moved

Figure 2f. Mechanism Profiles – SRCA Entrance/Exit Slit Rotator

Size	Code Ident No.	
A	49671	20008842
		Sheet 25

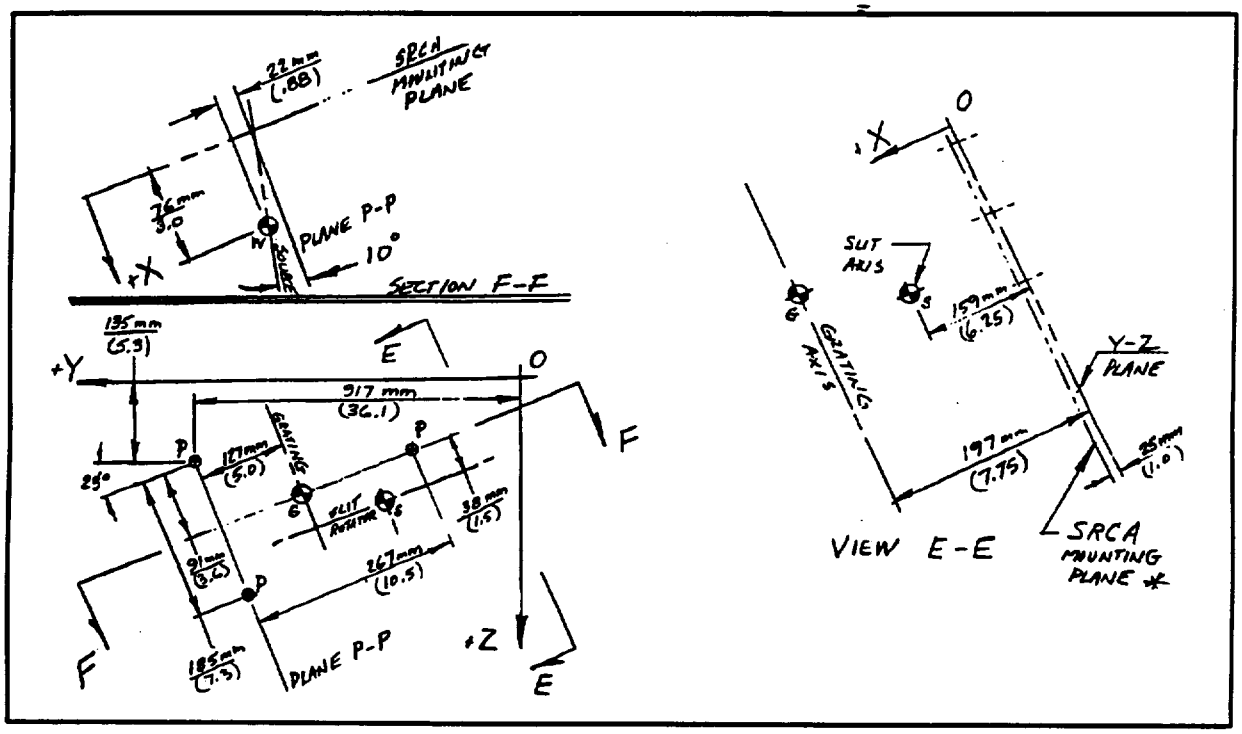

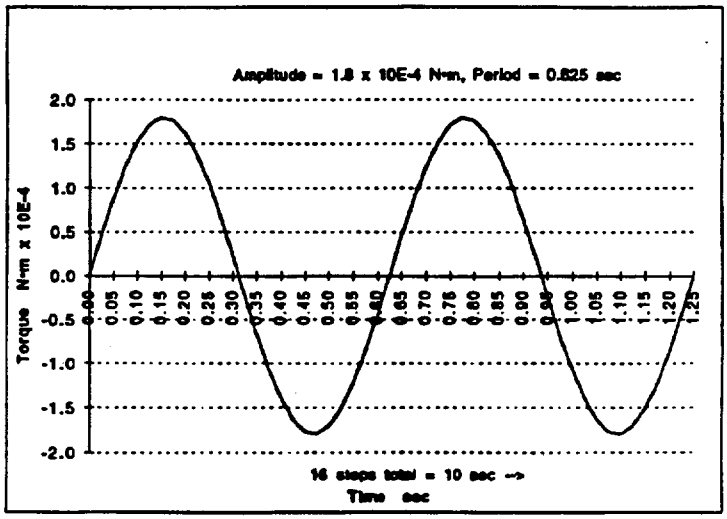

Notes:

18. All SRCA torques reacted to mounting points shown by $\oplus^{P}$. SRCA calibrator actuator positions relative to MODIS origin are approximate **(TBR 003).**

19. $\oplus_{G}$ = Grating Positioner center of mass being moved
    $\oplus_{S}$ = Slit rotator center of mass being moved
    $\oplus_{W}$ = Source Wheel center of mass being moved

Figure 2g. Mechanism Profiles – SRCA Source Wheel Drive

Size	Code Ident No.	
A	49671	20008842
		Sheet 26

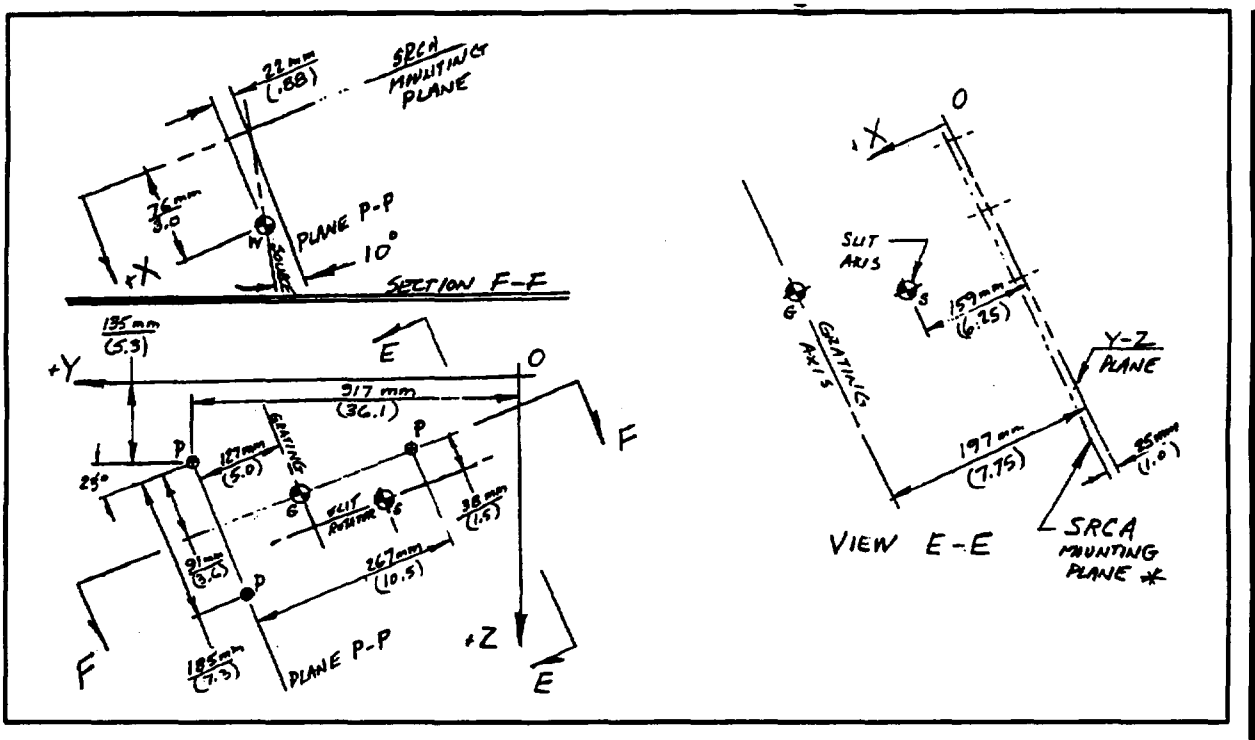

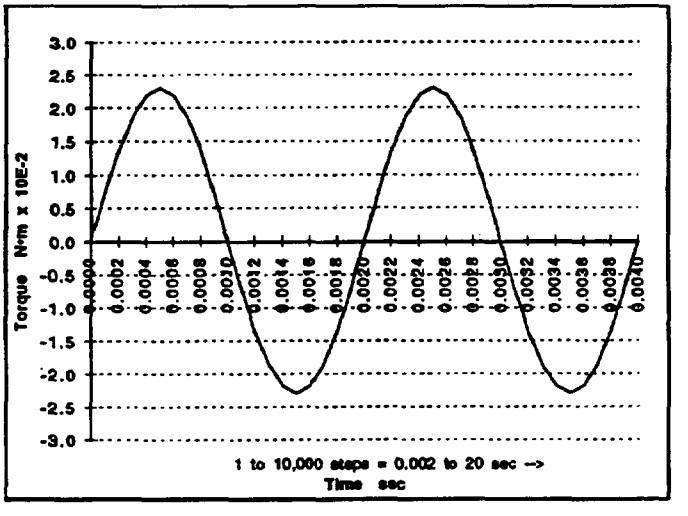

Notes:

20. All SRCA torques reacted to mounting points shown by ⊕P. SRCA calibrator actuator positions relative to MODIS origin are approximate **(TBR 003).**

21. ◐G = Grating Positioner center of mass being moved
    ◐S = Slit rotator center of mass being moved
    ◐W = Source Wheel center of mass being moved

Figure 2h. Mechanism Profiles – SRCA Grating Positioner

Size	Code Ident No.	
A	49671	20008842
		Sheet 27

Table IV. Finite Element Model

	Revision			
	B			
Date	5–18–92			
File name	MODIS–N052092.DAT			
Grid/element/ property ID range	355,001 to 359,999	(see Note 22)		
Coordinate ID range	701 to 725			
First fixed–base frequency (Hz)	80.6			

Notes:

22. Node numbners and descriptions for specific nodes in reduced finite element model are as follows:

Node Number	Description
357392*	Fold Mirror on Optical Bench
357393*	Primary Mirror on Optical Bench
357394*	Secondary Mirror on Optical Bench
358107*	LWIR Optical Assembly on Optical Bench
358108*	SW/MWIR Optical Assembly
358109*	VIS Optical Assembly on Optical Bench
358110*	Dichroic Assembly on Optical Bench
358111*	NIR Optical Assembly on Optical Bench
358112*	Cold Focal Plane in Radiative Cooler
361203*	Scan Mirror Center

Table V. MODIS Flight Items (TBD 006)

Item	Part No.	Supplier	Qty

Table VI. Launch Accountability Kit (TBD 007)

Item	Drawing #	Flight	Non–Flight

Table VII. Alignment Data (TBD 008)

From	To	Alignment Offset (arc–second) (see Note 23)		
		θ_X	θ_Y	θ_Z
Instrument Boresight	Instrument Alignment Cube			
Instrument Alignment Cube	Instrument Interface Cube			
Instrument Interface Cube	Spacecraft Master Reference Cube			
Instrument Alignment Cube	Instrument Mounting Plane & Hole Pattern	(TBD 009)	(TBD 009)	(TBD 009)
Drill Template Alignment Cube	Drill Template Mounting Plane & Hole Pattern	(TBD 009)	(TBD 009)	(TBD 009)

Notes:

23. Entries are offsets between the nominal instrument and spacecraft axes as defined in Figure 1.

Table VIII. Reference Documents*

Document Number	Date	Document Title	Source

* Table information will be filled in as required.

Next Assembly	Used on	Revisions		Rev 002	
20008840	EOS–AM	Ltr	Description	Date	Approved
First Application EOS–AM		Initial Issue		06–07–93	CM–GSR

Revision Record Continued on Sheet _____

Contract No. NAS5–32500	MARTIN MARIETTA	Martin Marietta Astro Space East Windsor, NJ Valley Forge, PA
Written C. Wilda. Date Claire Wilda 6-7-93	Interface Control Drawing, Thermal, Earth Observing System AM Spacecraft to Moderate Resolution Imaging Spectroradiometer	
Approved N. Koepp-Baker Date N B Koepp-Baker 6-7-93		
Approved Date	Size A	Code Ident No. 49671 — 20008843
Issued G. Rauscher Date 6/28/93 G. Rauscher		Sheet 1 of 35

PURPOSE

The Thermal Interface Control Drawing (TICD), 20008843, when executed, represents an agreement of the detailed implementation of the thermal interface between the Earth Observing System (EOS) AM Spacecraft and the Moderate Resolution Imaging Spectroradiometer (MODIS). This drawing, together with the Mechanical Interface Control Drawing (MICD) Drawing, 20008841; MICD Tables, 20008842; Electrical Interface Control Drawing (EICD) Schematic, 20008844; EICD Tables, 20008845; Integration and Test Interface Control Drawing (I&T ICD), 20008846; and Command and Data Handling Interface Control Drawing (C&DH ICD), 20008847; describe the details of the interfaces between the EOS–AM Spacecraft and MODIS. The top–level instrument Interface Control Drawing (ICD), 20008840, provides the instrument ICD tree and revision status for all sub–tier instrument ICDs.

SCOPE

The TICD contains information on surface properties, thermal model analysis cases, power dissipation, thermal control, and temperature limits for use in instrument and spacecraft thermal design and validation of the spacecraft accommodation of the instrument thermal environment.

Approval Signatures

IN ADDITION TO ECN AND CCB APPROVALS,
ALL CHANGES ON THIS DRAWING SHALL HAVE THE APPROVAL AND THE FULL AGREEMENT OF THE PARTIES LISTED BELOW.

REV	Spacecraft Program Office	Date	Instrument Program Office	Date	Principal Investigator	Date
	(signature on file) P. Giustino	4/28/93	(signature on file) L. Candell	5/14/93	(signature on file) W. Barnes	5/28/93

Size	Code Ident No.	
A	49671	20008843
		Sheet 2

Table of Contents

Section	Title	Sheet
	PURPOSE	2
	SCOPE	2
	Approval Signatures	2
1	THERMAL DESCRIPTION	8
1.1	MODIS Thermal Design Description	8
1.2	Thermal Interface Description	8
2	REDUCED THERMAL MODELS	25
2.1	Reduced Thermal Model Analysis Cases	25
2.1.1	Test Case 1 – End of Life Science Mode	25
2.1.2	Test Case 2 – Beginning of Life Science Mode	25
2.1.3	Test Case 3 – Beginning of Life Survival Mode	25
2.1.4	Test Case 4 – Orbit Acquisition and Initialization	26
2.1.5	Test Case 5 – End of Life Safe Mode	26
2.1.6	Test Case 6 – Beginning of Life Safe Mode	26
2.1.7	Test Case 7 – Earth Acquisition Failure Safe Mode	26
2.2	Power Dissipation	26
3	THERMAL CONTROL	30

List of Figures

Figure No.	Title	Sheet
1	Thermal Design Features	9
2a	Passive Radiative Cooler and Space Viewing Analog Electronics Module Radiative Field of View	10
2b	Main Electronics Module Radiative Field of View	11
2c	Forward Viewing Electronics Module Radiative Field of View	12
3a.	Thermal Fields of View Accommodation – Passive Radiative Cooler and Space Viewing Analog Module	13
3b	Thermal Fields of View Accommodation – Main Electronics Module	14
3c	Thermal Fields of View Accommodation–Forward Viewing Analog Module	15
4a	Surface Designations – MODIS External Surfaces	16
4b	Surface Designations – MODIS External Surfaces –X View	17
4c	Surface Designations – MODIS External Surfaces +X View	18
4d	Surface Designations – Space View Door Interior	19
4e	Surface Designations – Space View Door Exterior	20
4f	Surface Designations – Scan Aperture Sunshade Interior	21
4g	Surface Designations – Scan Aperture Sunshade Exterior	22
5	Heater and Sensor Locations	33

List of Tables

Table No.	Title	Sheet
I	Surface Properties	23
II	Reduced Thermal Models	27
III	Test Case Temperature Predictions	28
IV	Power Dissipation	29
Va	Temperature Control	31
VI	Temperature Limits	34
VII	Reference Documents	35

TBD Log

Item	Section	Page	Subject	Resp.	Due
TBD–1	Figure 3a Figure 3b Figure 3c	13 14 15	Thermal FoV accommodation (3 places)	C. Wilda (MMC)	6–15–93
TBD–2	Table I	23	Calculated area (2 places)	P. Bortfeldt (SBRC)	6–15–93
TBD–3	Table Va Table Vb	31 32	Temperature control* (2 places)	P. Bortfeldt (SBRC) J. Mehrten (SBRC)	6–15–93
TBD–4	Figure 5	33	Heater and sensor locations	P. Bortfeldt (SBRC) J. Mehrten (SBRC)	6–15–93
TBD–5	Table VI	34	Temperature limits*	P. Bortfeldt (SBRC)	6–15–93

* Where the majority of the table information is TBD, the entire table has been identified as TBD in the table title. Table information will be filled in as it becomes available.

TBR Log

Item	Section	Page	Subject	Resp.	Due
TBR–1	Table III	28	SMA operating temperature range	P. Bortfeldt (SBRC)	6–15–93

1 THERMAL DESCRIPTION

1.1 MODIS Thermal Design Description

The entrance aperture represents a sizeable thermal disturbance due to a strong radiative coupling to the earth. The space view port and Passive Radiative Cooler (PRC) are both located on the +Y face. Because of the shielding effect of the door, the environmental load on these two apertures is quite low. The PRC is used to cool the LWIR and SWIR/MWIR detectors to their required operating temperature of 85K. A servo–controlled heater is provided at the focal planes to maintain any one of three predetermined temperature set points (85K, 88K, and 95K). The PRC is conductively isolated from the instrument.

The solar calibrator port is located on the +X face of the instrument and is covered by a protective door. During solar calibration periods, the door is opened for approximately 2 minutes and solar energy is admitted through the aperture into the instrument. An articulating screen is provided which may be deployed across the solar calibration aperture to limit admitted radiation to 8% of full sun. This screen will be employed periodically to obtain a second calibration point. Solar calibration is considered to be a significant thermal input.

There are three other calibration devices internal to MODIS. They are the Spectro–Radiometric Calibration Assembly (SRCA), the IR blackbody, and the Solar Diffuser Stability Monitor (SDSM). Each of these devices is used only infrequently. When active, they dissipate some power, the highest being the SRCA and blackbody at about 30W each. These calibration devices are interlocked so that simultaneous activation of more than one will not be permitted.

1.2 Thermal Interface Description

MODIS is designed to be thermally independent from the EOS–AM Spacecraft. All thermally non–functional outer surfaces are covered with Multi–Layer Insulation (MLI) to minimize radiative exchange with the surroundings, and low conductance kinematic mounts are provided at the interface to the spacecraft. The functional openings on the instrument are: 1) entrance aperture, 2) space view port, 3) solar diffuser port, and 4) the PRC opening.

Most of the primary radiating surfaces are located on the +Y face of the instrument, the exception being a single electronics radiator on the +X face. These radiators reject the majority of the power dissipated within the instrument. These radiators are painted white to minimize absorbed albedo and solar energy.

The physical thermal design features are shown in Figure 1; thermal Fields of View (FoV) which went into making up the instrument model are shown in Figure 2a – 2c; resulting thermal FoV accommodation is shown in Figure 3a – 3c; the Thermal Radiation Analyzer System (TRASYS) model surfaces are shown in Figure 4a – 4c; and thermo–optical properties of the TRASYS model surfaces are listed in Table I.

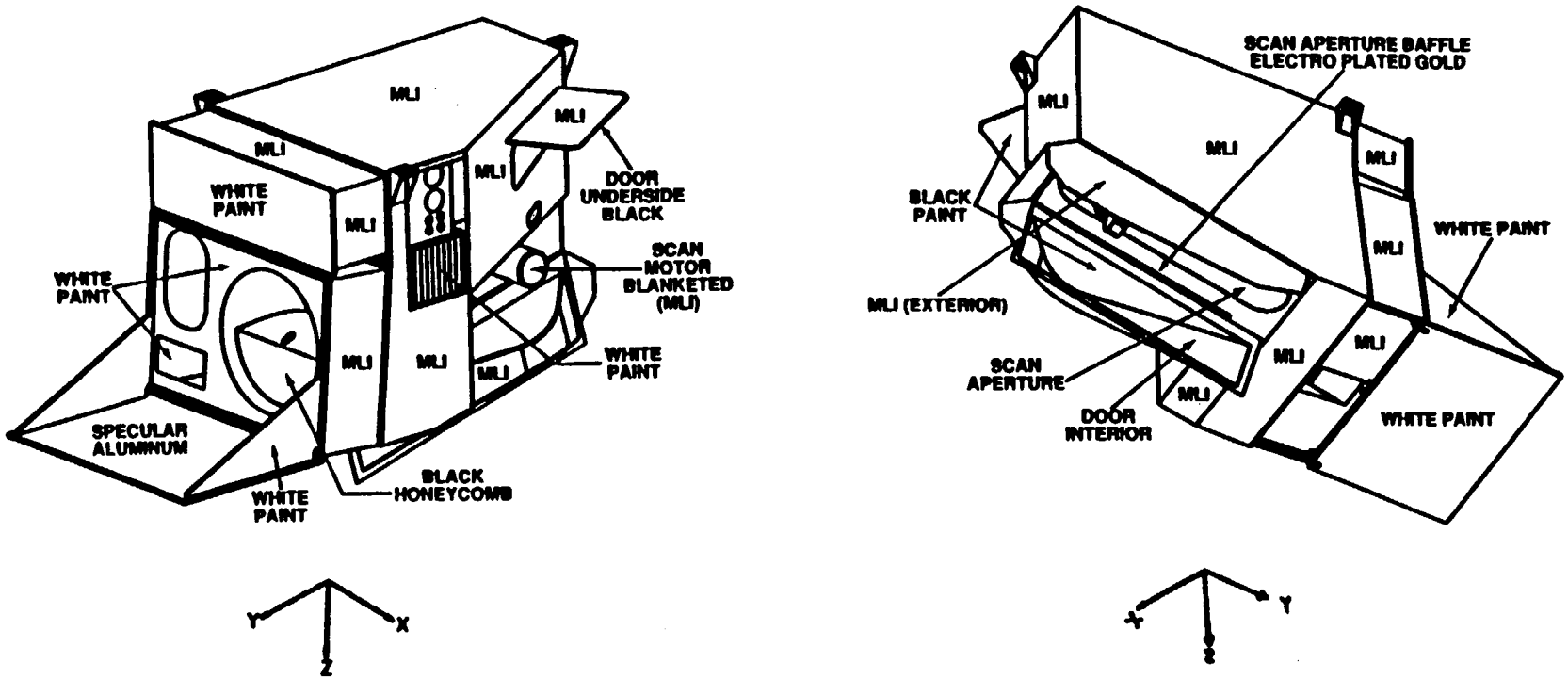

Figure 1. Thermal Design Features

Size A
Code Ident No. 49671
20008843
Sheet 9

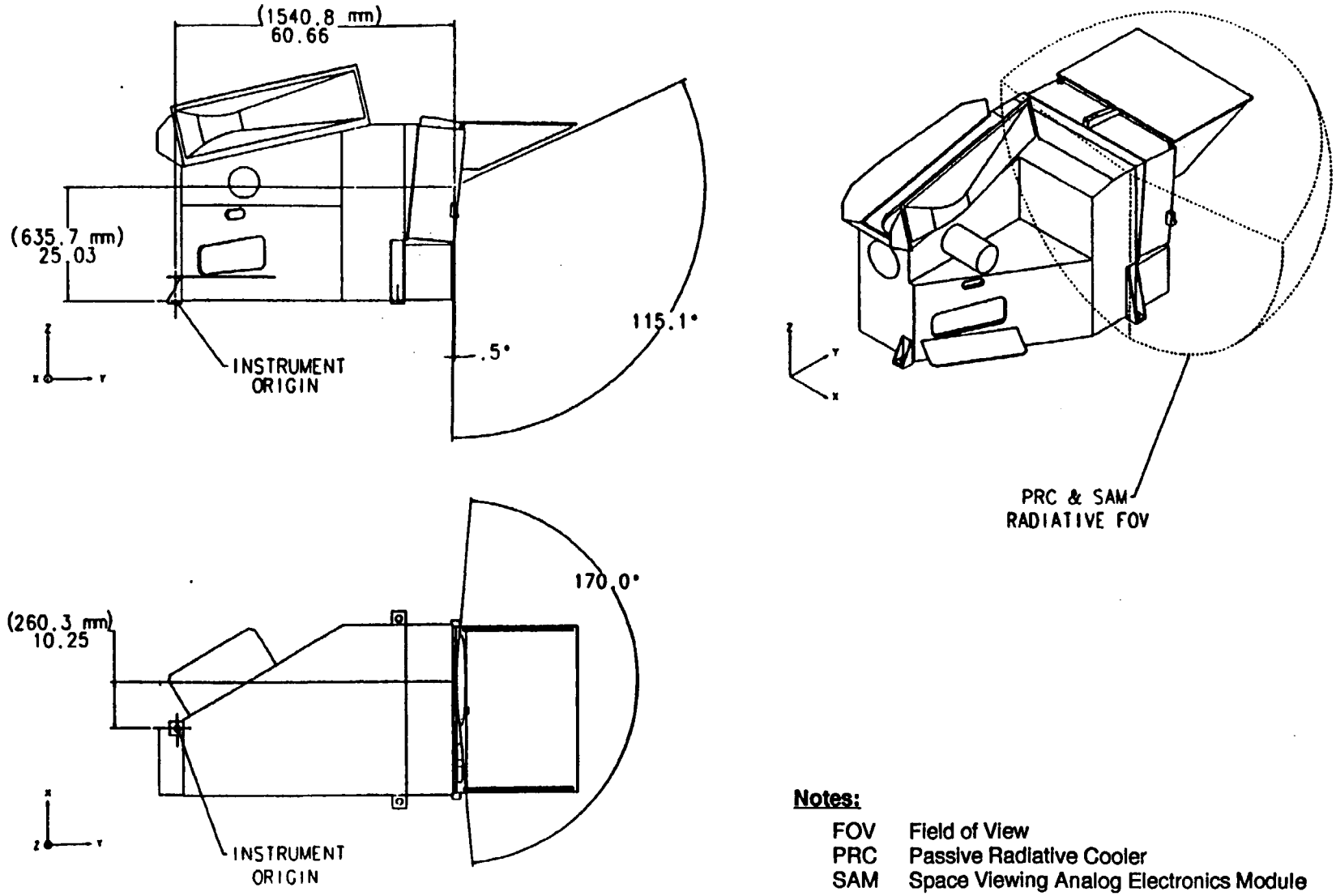

Notes:

FOV	Field of View
PRC	Passive Radiative Cooler
SAM	Space Viewing Analog Electronics Module

Figure 2a. Passive Radiative Cooler and Space Viewing Analog Electronics Module Radiative Field of View

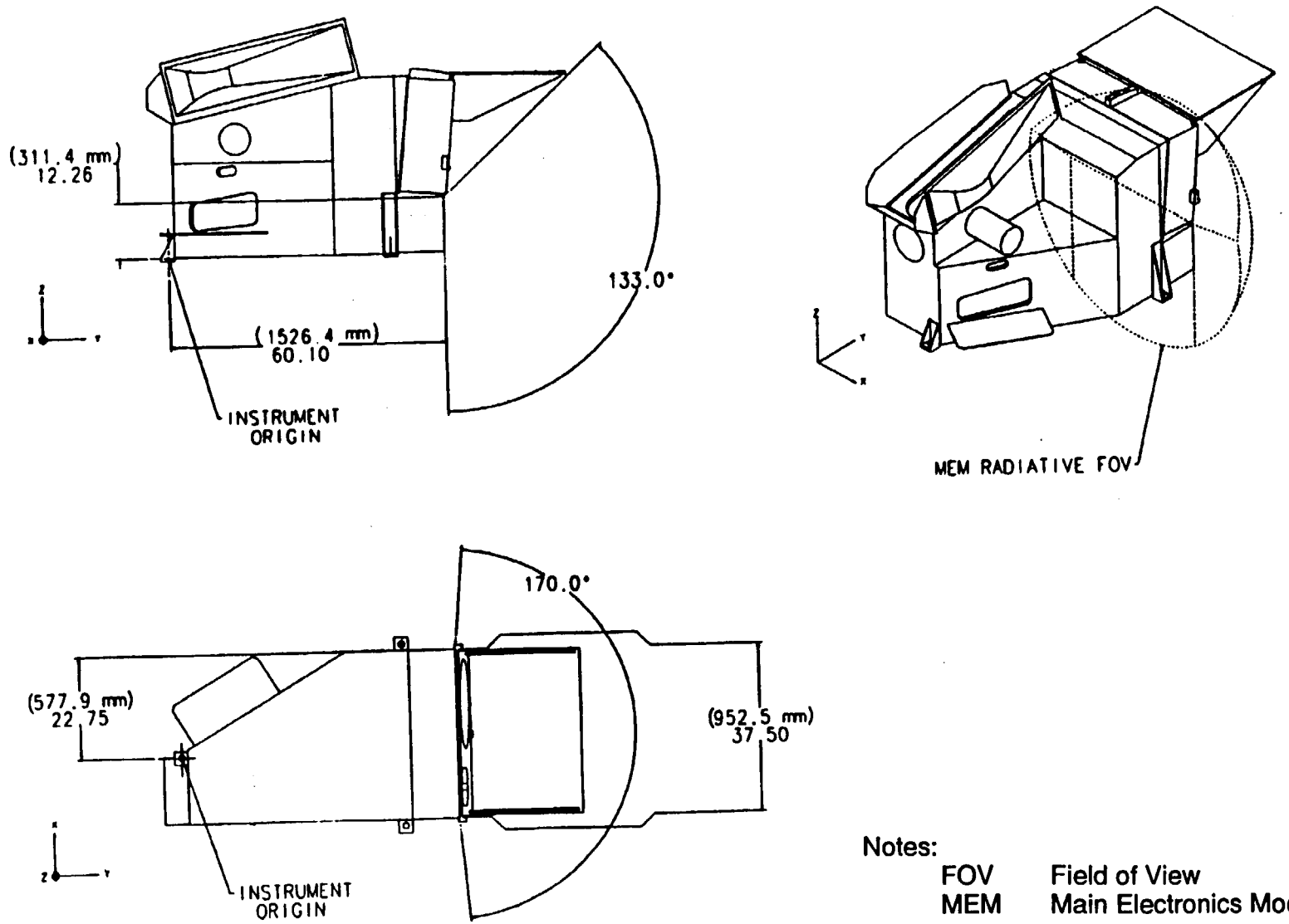

Notes:

FOV	Field of View
MEM	Main Electronics Module

Figure 2b. Main Electronics Module Radiative Field of View

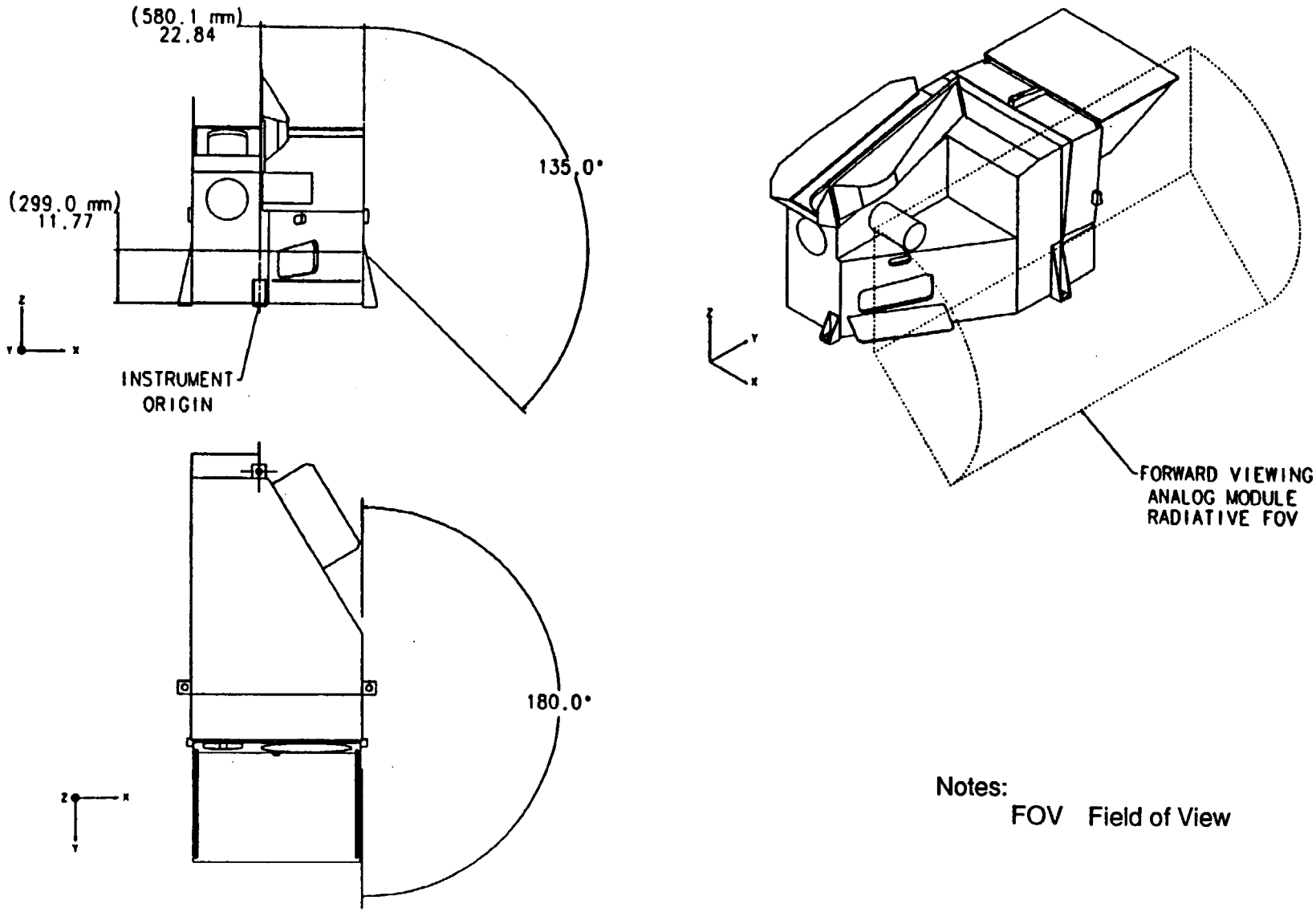

Notes:

FOV Field of View

Figure 2c. Forward Viewing Electronics Module Radiative Field of View

(TBD–1)

Figure 3a. Thermal Fields of View Accommodation – Passive Radiative Cooler and Space Viewing Analog Module

Size	Code Ident No.		
A	49671	20008843	Sheet 13

(TBD–1)

Figure 3b. Thermal Fields of View Accommodation – Main Electronics Module

(TBD–1)

Figure 3c. Thermal Fields of View Accommodation – Forward Viewing Analog Module

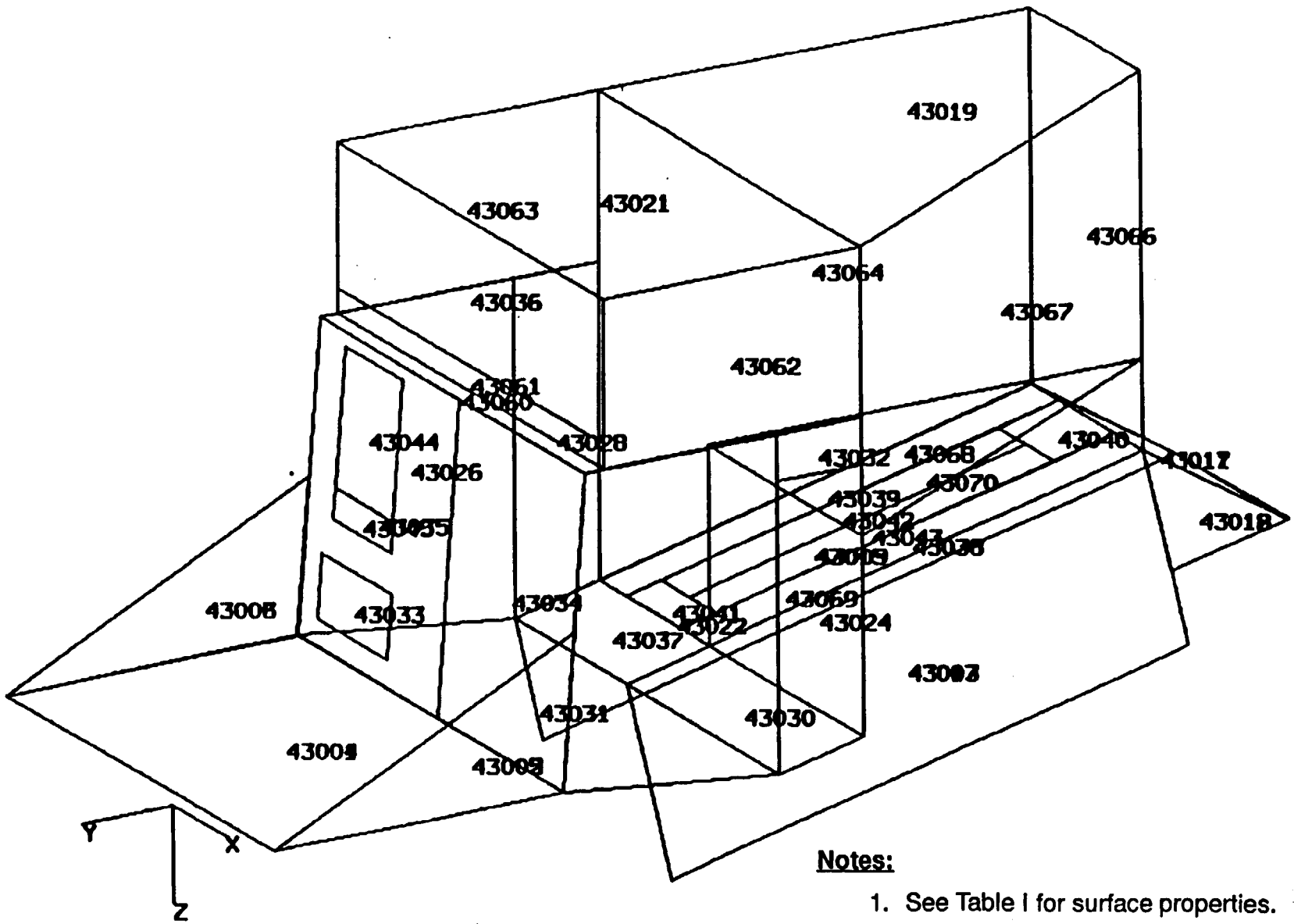

Notes:

1. See Table I for surface properties.

Figure 4a. Surface Designations – MODIS External Surfaces

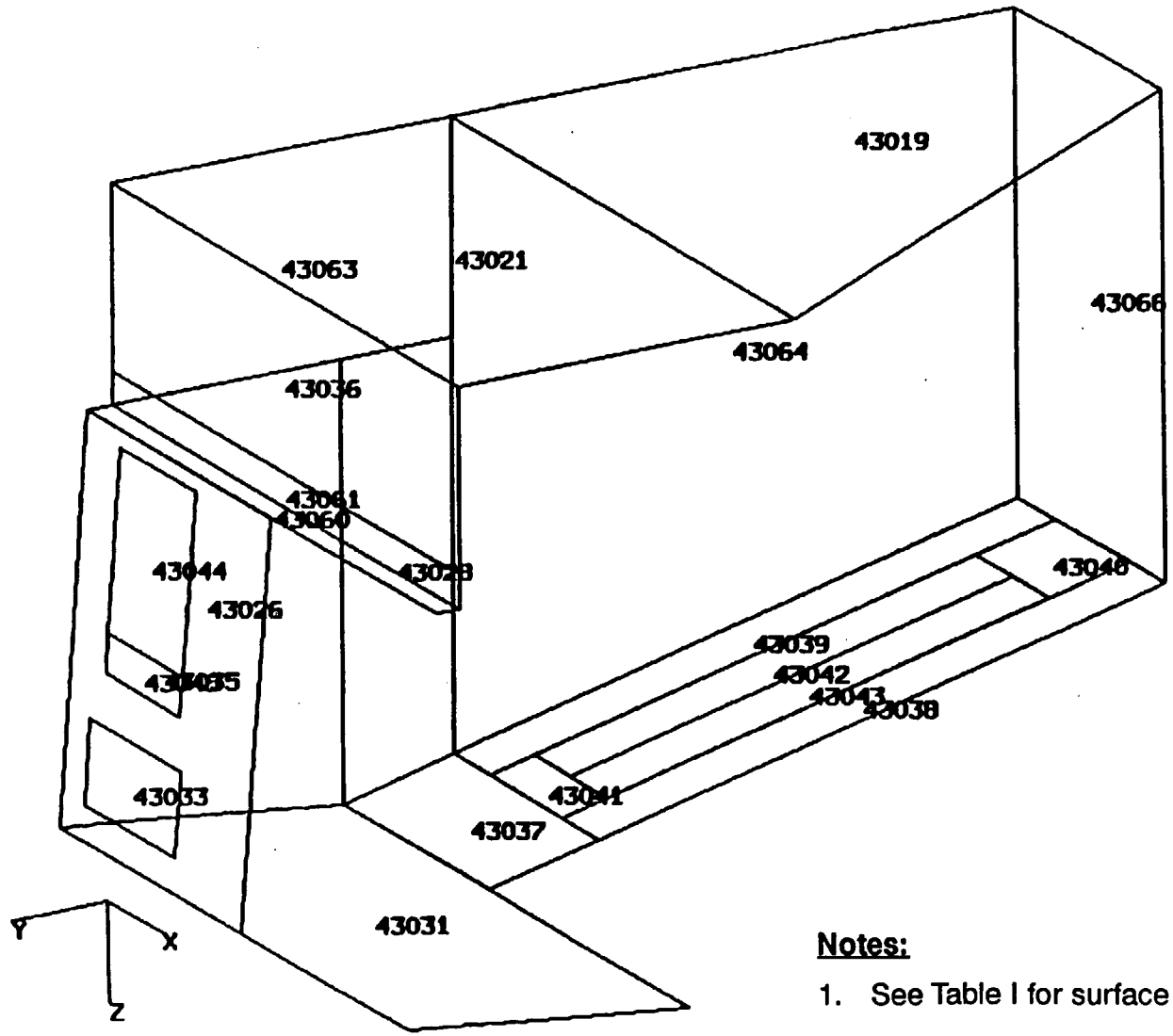

Notes:

1. See Table I for surface properties.

Figure 4b. Surface Designations – MODIS External Surfaces –X View

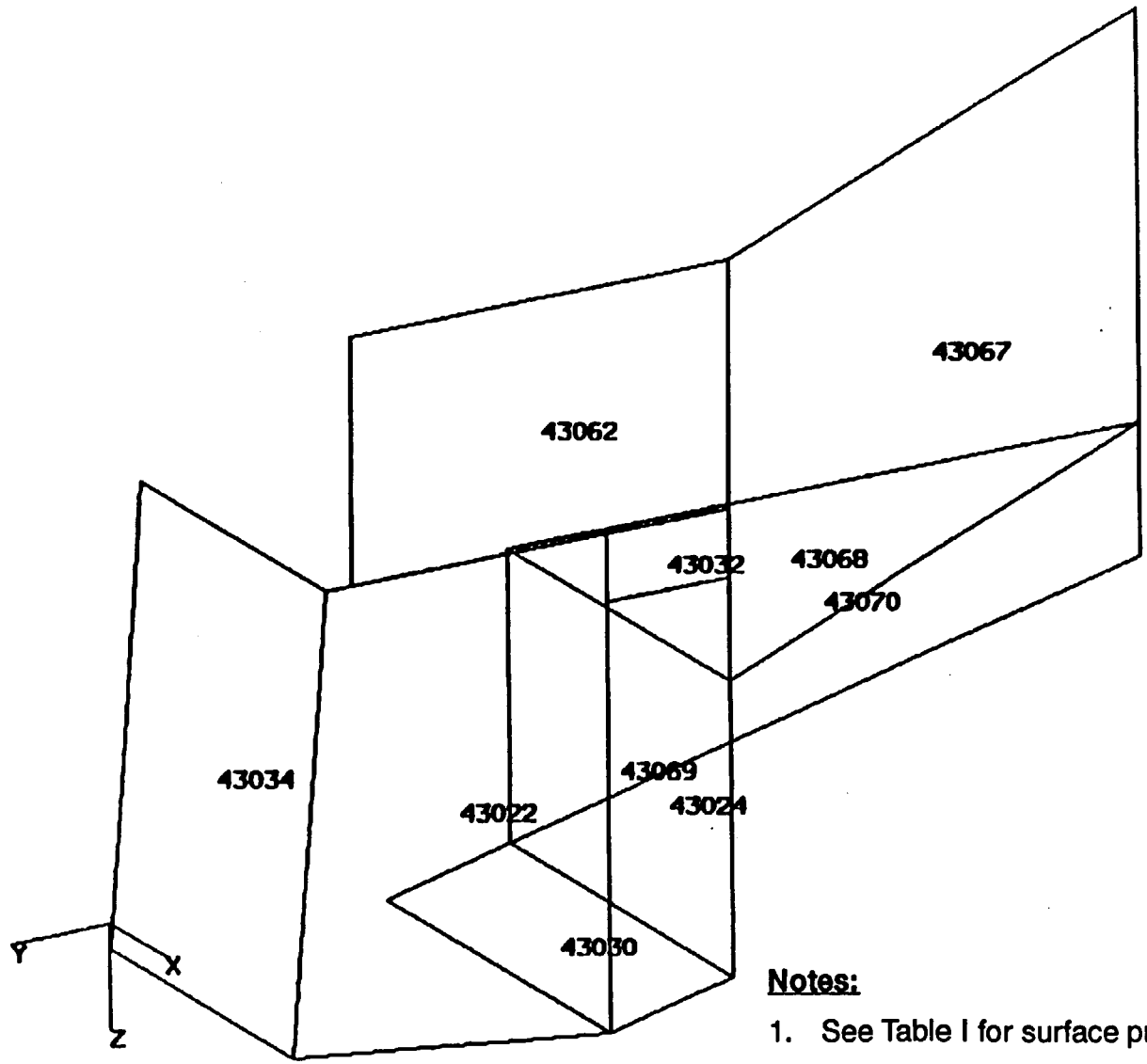

Notes:

1. See Table I for surface properties.

Figure 4c. Surface Designations – MODIS External Surfaces +X View

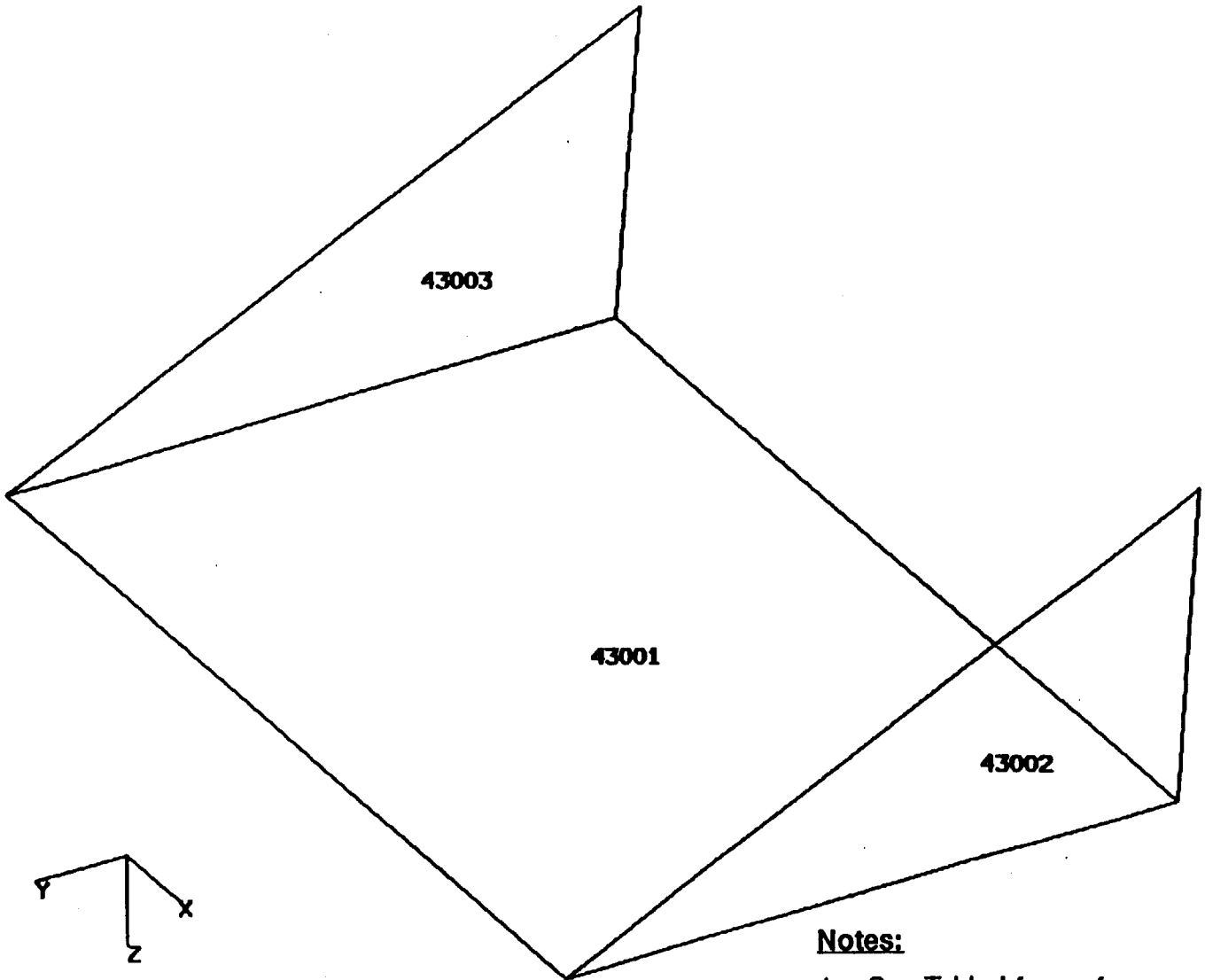

Notes:

1. See Table I for surface properties.

Figure 4d. Surface Designations – Space View Door Interior

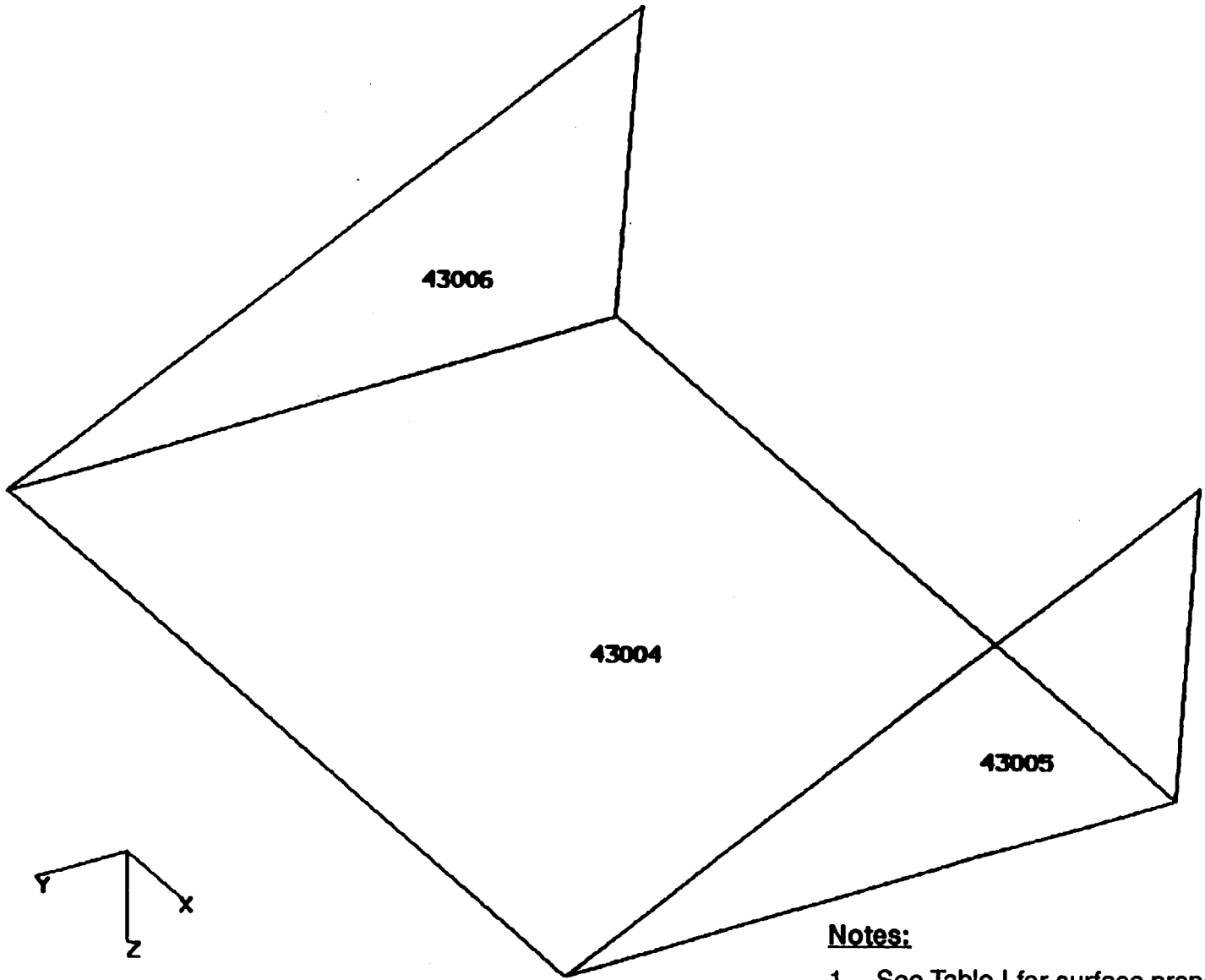

Notes:

1. See Table I for surface properties.

Figure 4e. Surface Designations – Space View Door Exterior

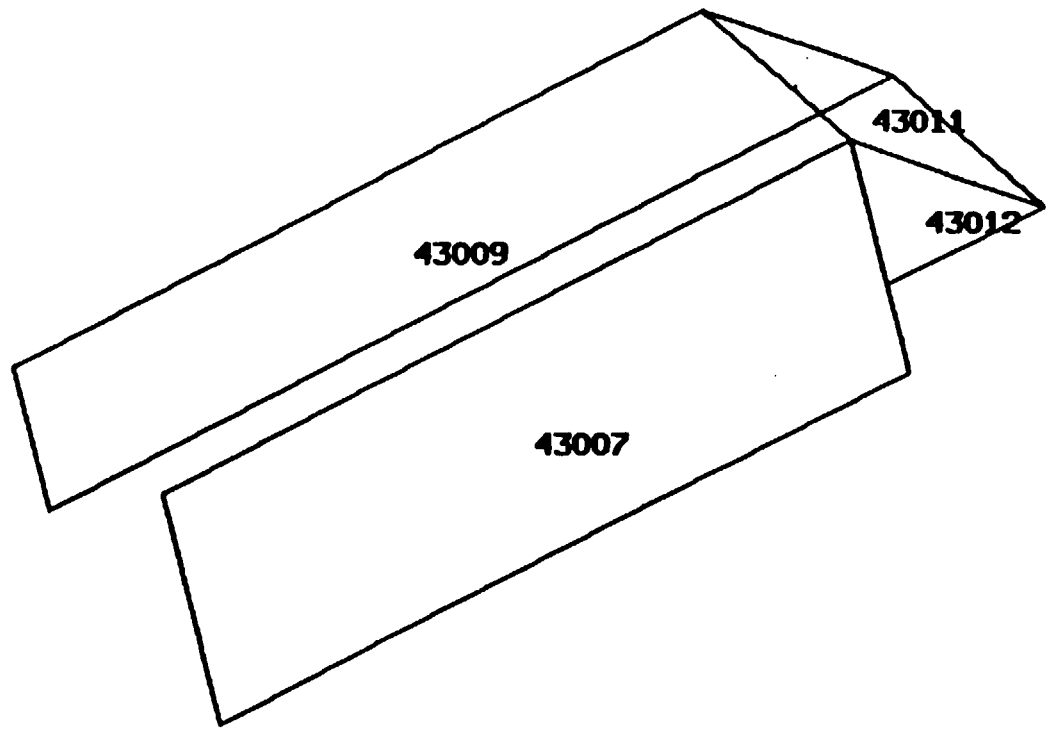

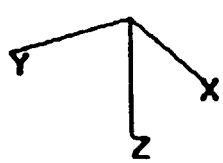

Notes:

1. See Table I for surface properties.

Figure 4f. Surface Designations – Scan Aperture Sunshade Interior

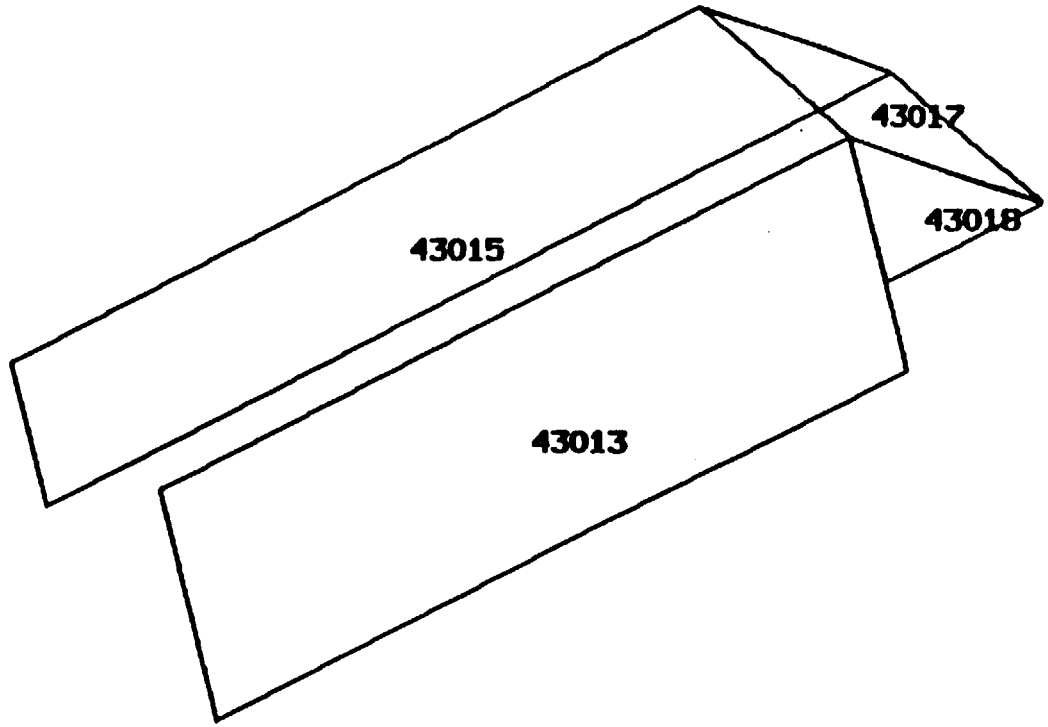

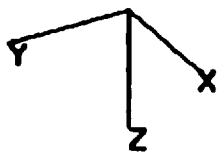

Notes:

1. See Table I for surface properties.

Figure 4g. Surface Designations – Scan Aperture Sunshade Exterior

Table I. Surface Properties

TRASYS Surface ID	Coating	Area (in^2)		Surface Emissivity		Surface Absorptivity	
		Calculated (TBD–2)	TRASYS	BOL	EOL	BOL	EOL
43001	98% specular Aluminum		912	0.035	0.035	0.13	0.13
43002	98% specular Aluminum		144	0.035	0.035	0.13	0.13
43003	98% specular Aluminum		144	0.035	0.035	0.13	0.13
43004	S13G/LO		912	0.88	0.88	0.2	0.35
43005	S13G/LO		144	0.88	0.88	0.2	0.35
43006	S13G/LO		144	0.88	0.88	0.2	0.35
43007	Black paint		706	0.9	0.88	0.9	0.92
43009	Black paint		270	0.9	0.88	0.9	0.92
43010	Black paint		220	0.9	0.88	0.9	0.92
43011	Black paint		226	0.9	0.88	0.9	0.92
43012	Black paint		50	0.9	0.88	0.9	0.92
43013	MLI – 2 mil KAPTON outer layer		353	0.74	0.7	0.35	0.5
43014	MLI – 2 mil KAPTON outer layer		353	0.74	0.7	0.35	0.5
43015	MLI – 2 mil KAPTON outer layer		491	0.74	0.7	0.35	0.5
43017	MLI – 2 mil KAPTON outer layer		226	0.74	0.7	0.35	0.5
43018	MLI – 2 mil KAPTON outer layer		49	0.74	0.7	0.35	0.5
43019	MLI – 2 mil KAPTON outer layer		288	0.74	0.7	0.35	0.5
43020	MLI – 2 mil KAPTON outer layer		684	0.74	0.7	0.35	0.5
43021	MLI – 2 mil KAPTON outer layer		817	0.74	0.7	0.35	0.5
43022	MLI – 2 mil KAPTON outer layer		233	0.74	0.7	0.35	0.5
43023	MLI – 2 mil KAPTON outer layer		192	0.74	0.7	0.35	0.5
43024	MLI – 2 mil KAPTON outer layer		151	0.74	0.7	0.35	0.5
43026	MLI – 2 mil KAPTON outer layer		234	0.74	0.7	0.35	0.5
43027	MLI – 2 mil KAPTON outer layer		192	0.74	0.7	0.35	0.5
43028	MLI – 2 mil KAPTON outer layer		176	0.74	0.7	0.35	0.5

Notes:

BOL	Beginning of life
C	Celsius
EOL	End of life
ID	Identification
in	Inch
MLI	Multi–Layer Insulation
TRASYS	Thermal Radiation Analyzer System

Table I. Surface Properties (Continued)

TRASYS Surface ID	Coating	Area (in^2)		Surface Emissivity		Surface Absorptivity	
		Calculated (TBD–2)	TRASYS	BOL	EOL	BOL	EOL
43030	MLI – 2 mil KAPTON outer layer		158	0.74	0.7	0.35	0.5
43031	MLI – 2 mil KAPTON outer layer		688	0.74	0.7	0.35	0.5
43032	S13G/LO		25	0.88	0.88	0.2	0.35
43033	S13G/LO		24	0.88	0.88	0.2	0.35
43034	S13G/LO		433	0.88	0.88	0.2	0.35
43035	S13G/LO		481	0.88	0.88	0.2	0.35
43036	S13G/LO		418	0.88	0.88	0.2	0.35
43037	Electroplated gold		114	0.06	0.04	0.25	0.35
43038	Electroplated gold		147	0.06	0.04	0.25	0.35
43039	Electroplated gold		147	0.06	0.04	0.25	0.35
43040	Scan aperture –Y side		41	1	1	1	1
43041	Scan aperture +Y side		23	1	1	1	1
43042	Scan aperture –X side		115	1	1	1	1
43043	Scan aperture +X side		115	1	1	1	1
43044	Space view port –Z side		88	1	1	1	1
43045	Space view port +Z side		19	1	1	1	1
43060	MLI – 2 mil KAPTON outer layer		57	0.74	0.7	0.35	0.5
43061	MLI – 2 mil KAPTON outer layer		76	0.74	0.7	0.35	0.5
43062	MLI – 2 mil KAPTON outer layer		279	0.74	0.7	0.35	0.5
43063	MLI – 2 mil KAPTON outer layer		279	0.74	0.7	0.35	0.5
43064	MLI – 2 mil KAPTON outer layer		1194	0.74	0.7	0.35	0.5
43066	MLI – 2 mil KAPTON outer layer		464	0.74	0.7	0.35	0.5
43067	MLI – 2 mil KAPTON outer layer		928	0.74	0.7	0.35	0.5
43068	MLI – 2 mil KAPTON outer layer		396	0.74	0.7	0.35	0.5
43069	MLI – 2 mil KAPTON outer layer		338	0.74	0.7	0.35	0.5
43070	MLI – 2 mil KAPTON outer layer		402	0.74	0.7	0.35	0.5

Notes:

BOL	Beginning of life
C	Celsius
EOL	End of life
ID	Identification
in	Inch
MLI	Multi–Layer Insulation
TRASYS	Thermal Radiation Analyzer System

2 REDUCED THERMAL MODELS

The Reduced Thermal Models (RTMs) used for spacecraft–level analysis are identified in Table II.

2.1 Reduced Thermal Model Analysis Cases

The Systems Improved Numerical Differencing Analyzer (SINDA) analysis cases of the integrated instrument RTMs/spacecraft model are described below, and the resulting temperature predictions are provided in Table III.

The MODIS RTM describes the Day Imaging and Night Imaging modes for one orbit. This information is used for EOL Science Mode analysis. This is not the worst case maximum power dissipation for the MODIS; however, the worst case occurs during infrequent and short duration calibration activities. Since no MODIS transient dissipations are provided in the RTM, the same orbit average dissipations are used.

2.1.1 Test Case 1 – End of Life Science Mode

Test Case 1, End of Life (EOL) Science Mode, provides worst case maximum temperature predicts and heater power (Qhtr) estimates (if required) in the EOL Science Mode for the EOS–AM mission. It assumes a previously–missed TDRSS contact is being made up (i.e., the make–up contact duration is 33 minutes instead of 22 minutes) and includes instrument observation dissipation peaks. This is considered the worst case hot design point for the spacecraft.

2.1.2 Test Case 2 – Beginning of Life Science Mode

Test Case 2, Beginning of Life (BOL) Science Mode, provides worst case minimum temperature predicts and Qhtr estimates in the BOL Science Mode for the EOS–AM mission. It assumes no TDRSS contact during the orbit and does not use instrument observation dissipation peaks; rather, only the Standby levels are used. (If no transient dissipations were provided in the RTMs, the same orbit average dissipations were used.)

2.1.3 Test Case 3 – Beginning of Life Survival Mode

Test Case 3, BOL Survival Mode, provides worst case minimum temperature predicts and Qhtr estimates in the BOL Survival Mode for the EOS–AM mission. This case represents a low power availability condition, and therefore the instrument is assumed to be powered off. It is assumed that the instrument is unable to close its doors and thus experiences the worst cold scenario.

2.1.4 Test Case 4 – Orbit Acquisition and Initialization

Test Case 4, Orbit Acquisition and Initialization (OAI), provides heater power estimates to be used in Electrical Power Subsystem (EPS) energy balance calculations. Both nominal and failed solar array deployment cases are considered for energy balance concerns. Instrument shields and covers are assumed to be closed to minimize heat loss.

2.1.5 Test Case 5 – End of Life Safe Mode

Test Case 5, EOL Safe Mode, includes two nominal, sun–oriented spacecraft configurations with a "parked" solar array. Maximum temperatures (to assess sun–oriented components) and heater power estimates (to determine the load on the EPS) are provided. Instrument doors are assumed open during this phase.

2.1.6 Test Case 6 – Beginning of Life Safe Mode

Test Case 6, BOL Safe Mode, includes two nominal, sun–oriented spacecraft configurations with a "parked" solar array. Maximum temperatures (to assess sun–oriented components) and heater power estimates (to determine the load on the EPS) are provided. Instrument doors are assumed open during this phase.

2.1.7 Test Case 7 – Earth Acquisition Failure Safe Mode

Test Case 7, Earth Acquisition Failure Safe Mode, includes one nominal, sun–oriented spacecraft configurations with a "parked" solar array. Minimum temperatures and heater power estimates are provided. Instrument shields and covers are assumed to be closed to minimize heat loss.

2.2 Power Dissipation

The power dissipations used for spacecraft–level analysis are identified in Table IV.

Table II. Reduced Thermal Models

	Revision			
	Preliminary	Preliminary		
Date	12–30–91	11–18–92		
TRASYS22 file name	MODISN	MDN–THV.INP		
SINDA87 file name	MODISN	MDN–SHV3.INP		
Node #	75000–75049	43000–43099		

Notes:

SINDA Systems Improved Numerical Differencing Analyzer
TRASYS Thermal Radiation Analyzer System

Table III. Test Case Temperature Predictions

SINDA Node #	Temperature Range (C)		Test Case Temperature Predictions (C)						
	Op	Non–Op	1 (max)	2 (min)	3 (min)	4 (min)	5 (max)	6 (min)	7 (min)
43002 PRC	–213 to 45	–213 to 60	–92	–96	–106	–13	–110	–110	–111
43006 SMA	0 to 35 (TBR–1)	–30 to 50	25	17	–8	–28	–26	–28	–31
43007 FAM	–25 to 45	–35 to 70	32	24	–14	–14	–9	–14	–14
43008 CLAM	–25 to 45	–35 to 70	28	19	–13	–23	–22	–24	–27
43009 SAM	–25 to 45	–35 to 70	23	18	–14	–14	–9	–14	–14
43010 MEM	–25 to 45	–35 to 70	28	21	–14	–14	–12	–14	–14

Notes:

BOL	Beginning of life
C	Celsius
CLAM	Cooler Located Analog Module
EOL	End of life
FAM	Forward Viewing Analog Electronics Module
max	Maximum
MEM	Main Electronics Module
min	Minimum
Non–Op	Non–operating
Op	Operating
PRC	Passive Radiative Cooler
SAM	Space Viewing Analog Electronics Module
SINDA	Systems Improved Numerical Differencing Analyzer
SMA	Scan Mirror Assembly

Table IV. Power Dissipation

Node #/Description	Average Power Dissipation (Watts)		
	Mode		
	Safe	Survival	Science (Day/Night Imaging)
43006 SMA	0	0	3.0
43007 FAM	0	0	14.0
43008 CLAM	0	0	4.3
43009 SAM	0	0	32.1
43010 MEM	0	0	110.0
Total RTM electrical dissipation	0	0	163.4
Detailed model electrical dissipation	24.2	0	158.9
Detailed model heater power	100	100	0

Notes:

CLAM	Cooler Located Analog Module
FAM	Forward Viewing Analog Electronics Module
MEM	Main Electronics Module
RTM	Reduced Thermal Model
SAM	Space Viewing Analog Electronics Module
SMA	Scan Mirror Assembly

3 THERMAL CONTROL

1. Heaters, coolers, control sensors, and temperature telemetry sensors are described in Table V.

2. Heater and sensor locations are shown in Figure 5.

3. Temperature limits are given in Table VI.

Table Va. Temperature Control (TBD–3) **

ID	
Function	Provide temperature control for MEM survival
Type	
Configuration*	
Location/RTM Mode	
Device	
Control sensor	
Telemetry sensor	
Temperature telemetry sensor acronym	
Heat sink	Main Electronics Module radiator
Control method	Passive thermostat switch
Power source	Spacecraft power feed routed through MODIS power supply
Dissipation (W)	
Peak	69
Average	69
Set Points (C)	
On	–14
Off	–8

Notes:

* Coolers only

** Where the majority of the table information is TBD, the entire table has been indentified as TBD in the table titile. Table information will be filled in as it becomes availabe.

C Celsuis

ID Identifier

TBD To be determined

MEM Main Electronics Module

W Watt

Table Vb. Temperature Control (TBD–3)**

ID	
Function	Provide temperature control for SAM survival
Type	
Configuration*	
Location/RTM Mode	
Device	
Control sensor	
Telemetry sensor	
Temperature telemetry sensor acronym	
Heat sink	Space Viewing Analog Electronics Module radiator
Control method	Passive thermostat switch
Power source	Spacecraft powerfeed routed through MODIS power supply
Dissipation (W)	
Peak	23
Average	23
Set Points (C)	
On	–14
Off	–8

Notes:

* Coolers only

** Where the majority of the table information is TBD, the entire table has been indentified as TBD in the table titile. Table information will be filled in as it becomes availabe.

C Celsuis

ID Identifier

TBD To be determined

SAM Space Viewing Analog Electronics Module

W Watt

(TBD–4)

Figure 5. Heater and Sensor Locations

Size	Code Ident No.		
A	49671	20008843	Sheet 33

Table VI. Temperature Limits (TBD–5) ** (See Note 2)

Mode	Average (C)	Telemetry Acronym MOD–Tx–_____		Telemetry Acronym MOD–Tx–_____	
		Minimum (C)	Maximum (C)	Minimum (C)	Maximum (C)
Launch					
Safe					
Survival (see Note 3.)		–20	60		
Turn–on					
Science (Day/Imaging)		8	18		

Notes:

** Where the majority of the table information is TBD, the entire table has been identified as TBD in the table title. Table information will be filled in as it becomes available.

2. Telemetry identified by * is invalid when instrument power is off.

3. Survival limits represent temperatures beyond which the instrument cannot recover and meet performance requirements.

Table VII. Reference Documents*

Document Number	Date	Document Title	Source

* Table information will be filled in as required.

(This page intentionally left blank.)

Next Assembly	Used on
20008840	EOS–AM

First Application
EOS–AM

Revisions		Rev	
Ltr	Description	Date	Approve
Initial Issue		08–12–93	CM–GS

Revision Record Continued on Sheet

Contract No.	NAS5–32500
Written	C. Wilda
Date	8-12-93
Approved	F. Komro
Date	8-12-93
Approved	
Date	
Issued	G. Rauscher
Date	8/12/93

MARTIN MARIETTA

POST OFFICE BOX 800
PRINCETON, NEW JERSEY 08543-0
TELEPHONE (609) 490-3400

Interface Control Drawing, Electrical, Tables, Earth Observing System AM Spacecraft to Moderate Resolution Imaging Spectroradiomet

Size	Code Ident No.	
A	49671	20008845

Sheet 1 of 59

PURPOSE

The Electrical Interface Control Drawing (EICD) Tables, 20008845, when executed, in conjunction with the EICD Schematic, 20008844, represents an agreement of the detailed implementation of the electrical interface between the Earth Observing System (EOS) AM Spacecraft and the Moderate Resolution Imaging Spectroradiometer (MODIS). These two drawings, together with the Mechanical Interface Control Drawing (MICD) Drawing, 20008841, MICD Tables, 20008842, Thermal Interface Control Drawing (TICD), 20008843, Integration and Test Interface Control Drawing (I&T ICD), 20008846, and Command and Telemetry Interface Control Drawing (C&T ICD), 20008847, describe the details of the interfaces between the EOS–AM Spacecraft and MODIS. The top–level instrument Interface Control Drawing (ICD), 20008840, provides the instrument ICD tree and revision status for all sub–tier instrument ICDs.

SCOPE

The EICD Tables contain information necessary to fabricate and test the instrument harnesses. It provides definition of interface circuits, timing diagrams, power profiles and transients, and electromagnetic sources and sensitivities. The EICD Schematic contains the instrument system schematic and grounding diagram.

Approval Signatures

IN ADDITION TO ECN AND CCB APPROVALS
ALL CHANGES ON THIS DRAWING SHALL HAVE THE APPROVAL AND THE FULL AGREEMENT OF THE PARTIES LISTED BELOW.

REV	Spacecraft Program Office	Date	Instrument Program Office	Date	Principal Investigator	Date
Initial	(signature on file) P. Giustino for M. Kavka	07–16–93	(signature on file) L. Candell	08–05–93	(signature on file) W. Barnes	07–30–93

Size	Code Ident No.	
A	49671	20008845
		Sheet 2

Table of Contents

Section	Title	Sheet
	PURPOSE	2
	SCOPE	2
	Approval Signatures	2
1	HARNESSES	8
1.1	Harness Definition	8
1.2	Interface Circuits	8
1.3	Timing Diagrams	8
2	POWER	42
3	ELECTROMAGNETIC COMPATIBILITY	47

List of Figures

Figure No.	Title	Sheet
1	Harness Block Diagram – MODIS/Spacecraft Interface	9
2	Harness Block Diagram – MODIS/Power Interface	10
3	Harness Block Diagram – MODIS/Command and Telemetry Interface	11
4	Harness Block Diagram – MODIS/Science Interface	12
5	Power Interface Circuit	29
6	Time Mark and Frequency Bus Interface Circuit	30
7	Command and Telemetry Bus Interface Circuit	31
8	Science Data Interface Circuit	32
9	BDU Passive Analog Telemetry Interface Circuit(s)	33
10	BDU Passive Bi–Level Telemetry Interface Circuit(s)	34
11	BDU Relay Drive Command Interface Circuit(s)	35
12	Time Mark and Frequency Bus Timing Diagram	36
13	Command and Telemetry Bus Timing Diagram	37
14	Science Data Timing Diagram	38
15	BDU Passive Analog Telemetry Timing Diagram(s)	39
16	BDU Passive Bi–Level Telemetry Timing Diagram(s)	40
17	BDU Relay Drive Command Timing Diagram(s)	41
18	Turn–On Transient	44
19	Turn–Off Transient	45
20	[Mode Switch] Transient	46
21	Conducted Emissions Test Data – Power Leads (CE01)	49
22	Conducted Emissions Test Data – Power Leads (CE03)	50
23	Radiated Emissions Test Data – Electric Field (RE02)	51
24	Radiated Emissions Test Data – Magnetic Field (RE04)	52
25	Conducted Susceptibility Test Data – Power Leads (CS01)	53
26	Conducted Susceptibility Test Data – Power Leads (CS02)	54
27	Conducted Susceptibility Test Data – Power Leads (CS06)	55
28	Radiated Susceptibility Test Data – Magnetic Field (RS01)	56
29	Radiated Susceptibility Test Data – Electric Field (RS03)	57
30	Magnetic Properties Test Data	58

List of Tables

Table No.	Title	Sheet
I	Harness Length	13
II	Connector List	14
IIIa	MODP1: Power Feed A Interconnections	15
IIIb	MODP2: Power Feed B Interconnections	16
IIIc	MODP3: BDU Commands Interconnections	17
IIId	MODP4: BDU Telemetry Interconnections	20
IIIe	MODP5: TM&F Bus – Side A Interconnections	25
IIIf	MODP6: TM&F Bus – Side B Interconnections	25
IIIg	MODP7: C&T Bus A Interconnections	26
IIIh	MODP8: C&T Bus B Interconnections	26
IIIi	MODP9: HIgh Rate Data Link – Side A – HI Interconnections	27
IIIj	MODP10: HIgh Rate Data Link – Side A – LO Interconnections	27
IIIk	MODP11: HIgh Rate Data Link – Side B – HI Interconnections	28
IIIm	MODP12: HIgh Rate Data Link – Side B – LO Interconnections	28
IV	Power Consumption	43
V	Emissions	48
VI	Susceptibility	48
VII	Magnetic Properties	48
VIII	Magnetic Susceptibility	48
VIII	Reference Documents	59

TBD LOG

ITEM	SECTION	PAGE	SUBJECT	RESPONSIBLE	DUE
TBD 1	Figure 1 Table IIIa through Table IIIm	9 15 28	Connector numbers (19 places)	S. Holaday (MMC)	6–30–94
TBD 2	Figure 1 Table I	9 13	Harness segment ID numbers (2 places)	S. Holaday (MMC)	12–30–94
TBD 3	Figure 2 Figure 3 Figure 4 Table I	10 11 12 13	Number of harness segments and connector pairs (5 places)	S. Holaday (MMC)	6–30–94
TBD 4	Table I	13	Harness length	S. Holaday (MMC)	10–29–93
TBD 5	Table IIIa Table IIIb Table IIIc Table IIId	15 16 17 20	Destination pin (10 places)	S. Holaday (MMC)	9–30–94
TBD 6	Table IIIa through Table IIIm	15 28	Color (18 places)	S. Holaday (MMC)	9–30–94
TBD 7	Figure 5 through Figure 11	29 35	Interface circuits (7 places)	C. Wilda (MMC)	3–31–94
TBD 8	Figure 12 Figure 13 Figure 14 Figure 16 Figure 17	36 37 38 40 41	Timing diagrams (5 places)	C. Wilda (MMC)	6–30–94
TBD 9	2	42	Test point pin & connector for fuse verification (2 places)	S. Holaday (MMC)	9–30–94
TBD 10	Figure 18 Figure 19 Figure 20	44 45 46	Transients (4 places)	J. Mehrten (SBRC)	EM test +3 mos
TBD 11	Table V through Table VIII	48	EMC (4 places)	J. Mehrten (SBRC)	EM test +3 mos
TBD 12	Figure 21 through 30	49 58	EMC test data (10 places)	J. Mehrten (SBRC)	PFM Delivery

TBR LOG

ITEM	SECTION	PAGE	SUBJECT	RESPONSIBLE	DUE
TBR 1	1.1	8	Non–flight connector number designation	S. Holaday (MMC)	12–30–94
TBR 2	Table II	14	TM&F and C&T Bus connector types (8 places)	S. Holaday (MMC)	9–30–93

1 HARNESSES

1.1 Harness Definition

1. The block diagram of the harnesses utilized by the MODIS is shown in Figures 1 through 4 . (All harnesses are supplied by the Spacecraft Integrator.)

2. The harness lengths are given in Table I. The harness length given is the total length of the harness from the instrument to the spacecraft component providing or receiving the signal. Also included in Table I is the total number of connector pairs present in a harness including the connector mating half on the instrument and on the spacecraft component. Each harness is referenced by the Harness Segment ID between the instrument and the Interface Connector Panel (ICP) shown in Figure 1.

3. The list of connectors mating to the MODIS used by the Spacecraft Integrator to fabricate the MODIS harnesses is shown in Table II.

   a. Spacecraft harness connector numbers are assigned to denote the subsystem, component, and approximate location of the component on the spacecraft. Non–flight connector numbers are preceded by an X. **(TBR 1)**

   b. The interconnections are shown in Tables IIIa through IIIm. The following legend is used for wire type:

Coax	Coaxial transmission line
SC	Single conductor, unshielded
SCS	Single conductor, shielded
Tn	Twisted bundle of n wires, unshielded
TnS	Twisted bundle of n wires, shielded
Twinax	Twinaxial transmission line
Triax	Triaxial transmission line

   c. All harnesses which are required by PN20005869, EOS–AM Spacecraft EMC Control Plan, to have an overall outer shield have either a copper tape over–wrap or a braid shield.

      The copper tape is actually copper–plated mylar tape which is one inch wide. The tape is then folded over 1/8 inch, making it 7/8 inch wide. The tape is 0.0017 inches thick (0.0007 inch copper on 0.001 inch mylar). The wrap is lapped half its width.

      Cables using a braid shield use braids similar to MIL–C–27500.

1.2 Interface Circuits

The interface circuits are shown in Figures 5 through 11.

1.3 Timing Diagrams

The timing diagrams are shown in Figures 12 through 17.

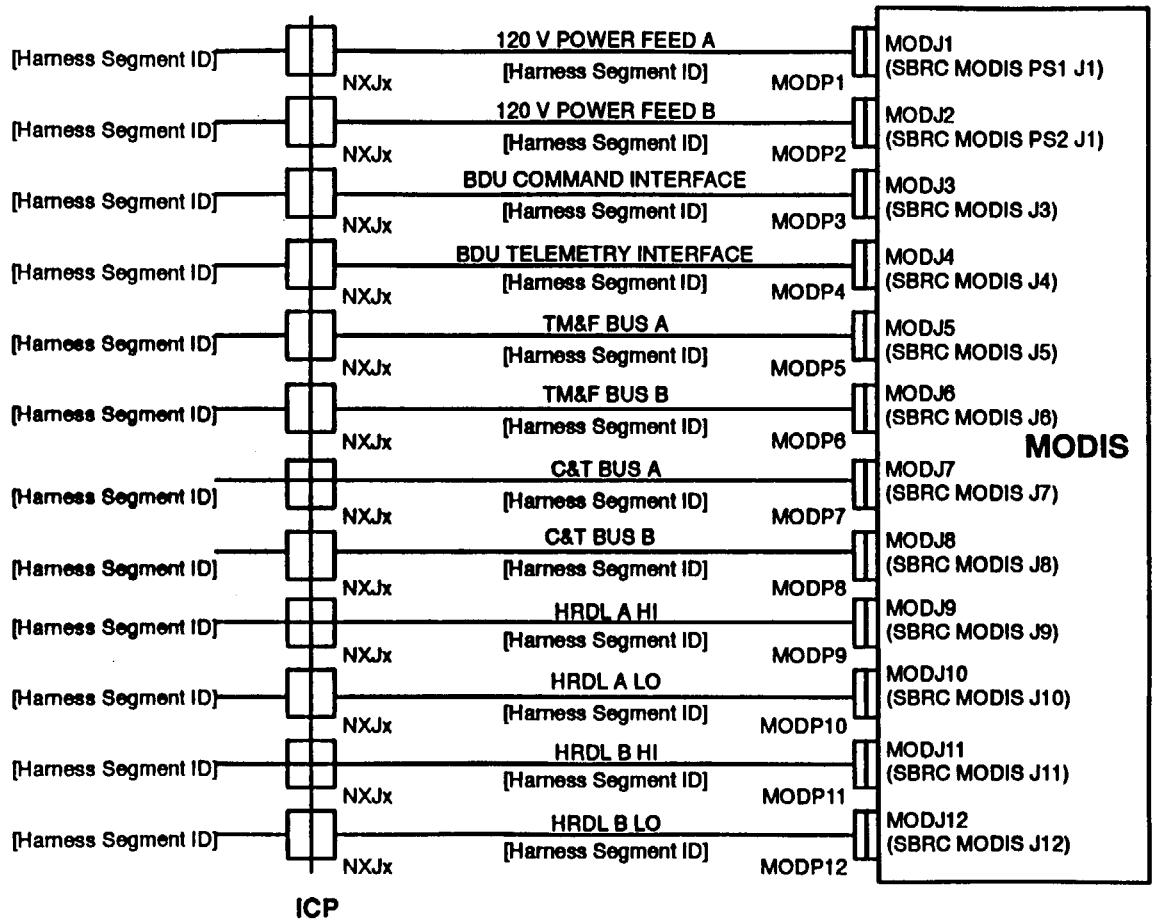

Notes:

ICP Interface Connector Panel

1. Connector numbers are **(TBD 1)**.
2. Harness Segment ID numbers are **(TBD 2)**.

Figure 1. Harness Block Diagram – MODIS/Spacecraft Interface

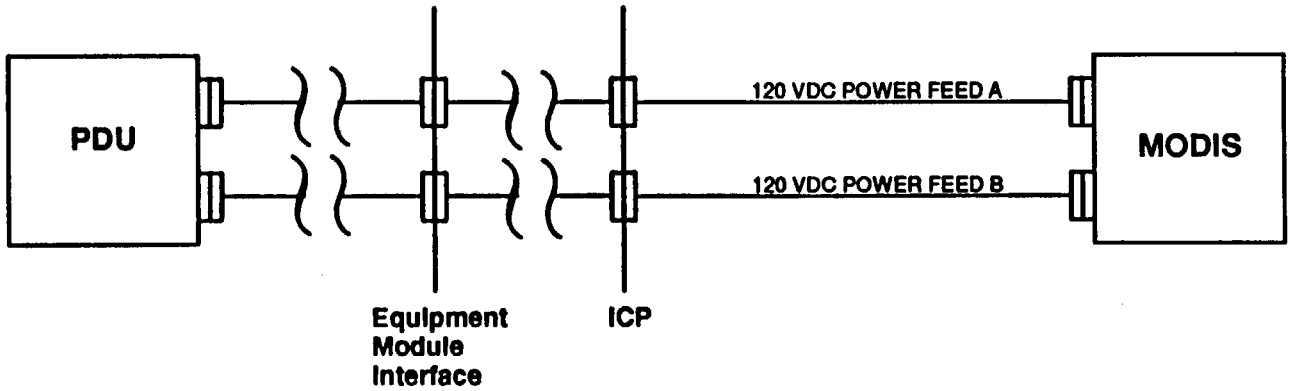

Notes:

ICP Interface Connector Panel

PDU Power Distribution Unit

1. Number of harness segments and connector pairs is **(TBD 3)**

Figure 2. Harness Block Diagram – MODIS/Power Interface

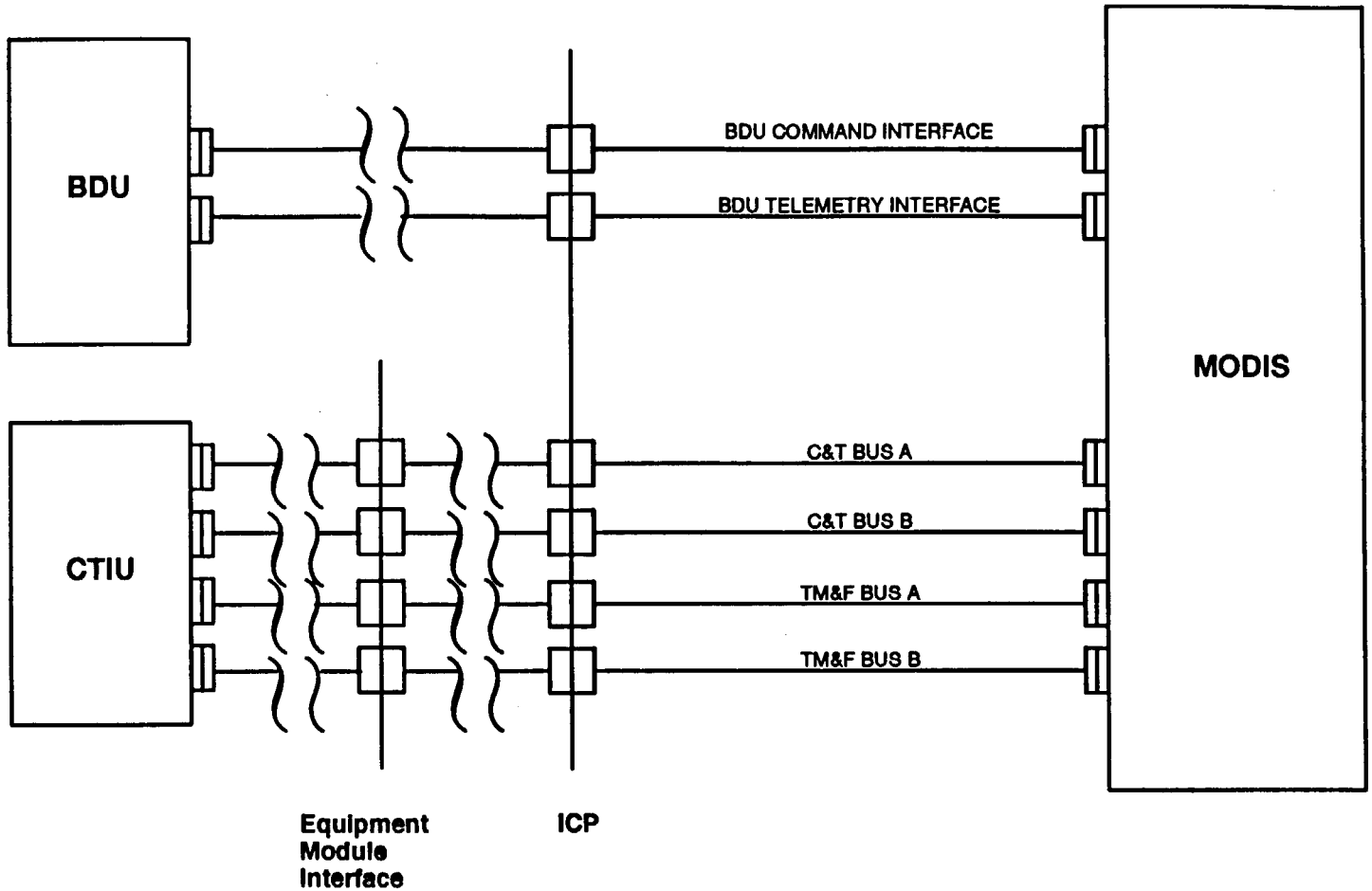

Notes:

BDU Bus Data Unit

CTIU Command and Telemetry Interface Unit

ICP Interface Connector Panel

1. Number of harness segments and connector pairs is **(TBD 3)**.

Figure 3. Harness Block Diagram – MODIS/Command and Telemetry Interface

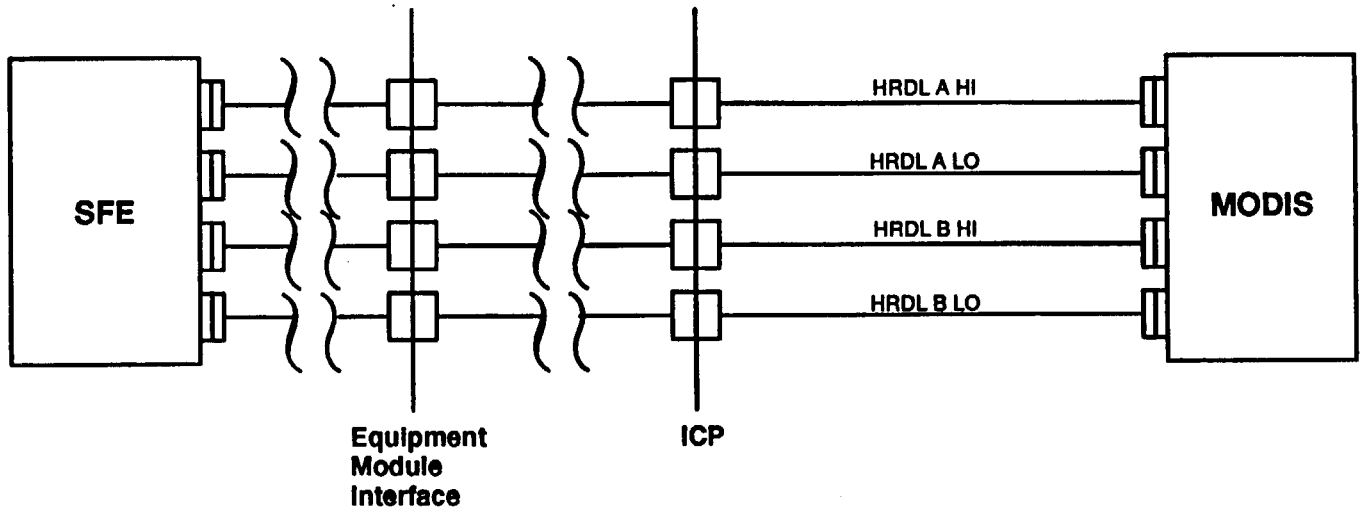

Notes:

ICP Interface Connector Panel

SFE Science Formatting Equipment

1. Number of harness segments and connector pairs is **(TBD 3)**.

Figure 4. Harness Block Diagram – MODIS/Science Interface

Table I. Harness Length

Description	Instrument Harness Segment ID (TBD 2)	Total # of Segments (TBD 3)	Total # of Connector Pairs (TBD 3)	Total Length (meters) (TBD 4)	Figure #
120V Power Feed A					2
120V Power Feed B					2
BDU Cmd I/F					3
BDU Tlm I/F					3
TM&F Bus A					3
TM&F Bus B					3
C&T Bus A					3
C&T Bus B					3
HRDL A HI					4
HRDL A LO					4
HRDL B HI					4
HRDL B LO					4

Table II. Connector List

Component Connector		Harness Connector		MICD Drawing Location		Function
Designation	Type	Designation	Type	Sheet	Zone	
MODJ1	MS27474T12F98P	MODP1	MS27484T12F98S	14	E6	MODIS 120V Power – Feed A
MODJ2	MS27474T12F98P	MODP2	MS27484T12F98S	14	E6	MODIS 120V Power – Feed B
MODJ3	MS27508T16F35S	MODP3	MS27484T16F35P	14	E5	MODIS BDU Cmd I/F
MODJ4	MS27508T22F35S	MODP4	MS27484T16F35P	14	E5	MODIS BDU Tlm I/F (both passive analog and passive bi–level telemetry)
MODJ5	**(TBR 2)** Trompeter BJ3159AC–221 Bulkhead Jack	MODP5	**(TBR 2)** Trompeter PL3155AC–221 Plug	14	E5	MODIS Time Mark and Frequency Bus – Side A
MODJ6	**(TBR 2)** Trompeter BJ3159AC–221 Bulkhead Jack	MODP6	**(TBR 2)** Trompeter PL3155AC–221 Plug	14	E5	MODIS Time Mark and Frequency Bus – Side B
MODJ7	**(TBR 2)** Raychem D–621–0412P	MODP7	**(TBR 2)** Raychem D–621–0411S	14	E5	MODIS Command and Telemetry Bus A
MODJ8	**(TBR 2)** Raychem D–621–0412P	MODP8	**(TBR 2)** Raychem D–621–0411S	14	E5	MODIS Command and Telemetry Bus B
MODJ9	Gore G2S01R52050.0	MODP9	Gore G2S01	14	E5	MODIS High Rate Data Link – Side A – Hi
MODJ10	Gore G2S01R52050.0	MODP10	Gore G2S01	14	E5	MODIS High Rate Data Link – Side A – Lo
MODJ11	Gore G2S01R52050.0	MODP11	Gore G2S01	14	E5	MODIS High Rate Data Link – Side B – Hi
MODJ12	Gore G2S01R52050.0	MODP12	Gore G2S01	14	E5	MODIS High Rate Data Link – Side B – Lo

Table IIIa. MODP1: Power Feed A Interconnections

Pin	Function	Destination		Wire Size	Wire Type	Twist Group	Shield Group	Color (TBD 6)	Interface Circuit (Figure #)	Timing Diagram (Figure #)	Notes
		Connector (TBD 1)	Pin (TBD 5)								
A	MODIS +120 V POWER FEED A–1	NXJx		20	T5S	001	001		5	N/A	1
B	MODIS +120 V POWER FEED A–2	NXJx		20	T5S	001	001		5	N/A	1
C	SPARE										
D	MODIS FAULT GROUND A	NXJx		20	T5S	001	001		5	N/A	1
E	MODIS +120 V POWER FEED RETURN A–1	NXJx		20	T5S	001	001		5	N/A	1
F	MODIS +120 V POWER FEED RETURN A–2	NXJx		20	T5S	001	001		5	N/A	1
G	SPARE										
H	SPARE										
J	SPARE										
K	SPARE										

Notes:

N/A Not applicable

1. Interface cable outer shield bonded to shell of harness connector.

Table IIIb. MODP2: Power Feed B Interconnections

Pin	Function	Destination		Wire Size	Wire Type	Twist Group	Shield Group	Color	Interface Circuit	Timing Diagram	Notes
		Connector (TBD 1)	Pin (TBD 5)					(TBD 6)	(Figure #)	(Figure #)	
A	MODIS +120 V POWER FEED B–1	NXJx		20	T5S	001	001		5	N/A	1
B	MODIS +120 V POWER FEED B–2	NXJx		20	T5S	001	001		5	N/A	1
C	SPARE										
D	MODIS FAULT GROUND B	NXJx		20	T5S	001	001		5	N/A	1
E	MODIS +120 V POWER FEED RETURN B–1	NXJx		20	T5S	001	001		5	N/A	1
F	MODIS +120 V POWER FEED RETURN B–2	NXJx		20	T5S	001	001		5	N/A	1
G	SPARE										
H	SPARE										
J	SPARE										
K	SPARE										

Notes:

N/A Not applicable

1. Interface cable outer shield bonded to shell of harness connector.

Table IIIc. MODP3: BDU Commands Interconnections

Pin	Function	Destination		Wire Size	Wire Type	Twist Group	Shield Group	Color (TBD 6)	Interface Circuit (Figure #)	Timing Diagram (Figure #)	Notes
		Connector (TBD 1)	Pin (TBD 5)								
1	CP_A_ON_B_OFF	NXJx		24	T2	001	001		6	12	1, 2
2	CP_A_ON_B_OFF_RTN	NXJx		24	T2	001	001		6	12	1, 2
3	SPARE										
4	CP_B_ON_A_OFF	NXJx		24	T2	002	001		6	12	1, 2
5	CP_B_ON_A_OFF_RTN	NXJx		24	T2	002	001		6	12	1, 2
6	SPARE										
7	SPARE										
8	CP_STD_RESET	NXJx		24	T2	003	001		6	12	1, 2
9	CP_STD_RESET_RTN	NXJx		24	T2	003	001		6	12	1, 2
10	CP_UPLD_RESET	NXJx		24	T2	004	001		6	12	1, 2
11	CP_UPLD_RESET_RTN	NXJx		24	T2	004	001		6	12	1, 2
12	SPARE										
13	SPARE										
14	SPARE										
15	ENABL_FAILSAFE	NXJx		24	T2	005	001		6	12	1, 2
16	ENABL_FAILSAFE_RTN	NXJx		24	T2	005	001		6	12	1, 2
17	SPARE										
18	SPARE										
19	SPARE										
20	SPARE										
21	SPARE										
22	SPARE										

Notes:

1. Interface cable outer shield bonded to shell of harness connector.
2. All twisted pair signals will be enclosed in an overall shield.

Table IIIc. MODP3: BDU Commands Interconnections (cont'd)

Pin	Function	Destination		Wire Size	Wire Type	Twist Group	Shield Group	Color (TBD 6)	Interface Circuit (Figure #)	Timing Diagram (Figure #)	Notes
		Connector (TBD 1)	Pin (TBD 5)								
23	PS1_ON	NXJx		24	T2	006	001		6	12	1, 2
24	PS1_ON_RTN	NXJx		24	T2	006	001		6	12	1, 2, 3
25	PS1PS2_OFF_A	NXJx		24	T2	007	001		6	12	1, 2
26	PS1PS2_OFF_A_RTN	NXJx		24	T2	007	001		6	12	1, 2, 4
27	SPARE										
28	SPARE										
29	SPARE										
30	PS1PS2_OFF_B	NXJx		24	T2	008	001		6	12	1, 2
31	PS1PS2_OFF_B_RTN	NXJx		24	T2	008	001		6	12	1, 2, 4
32	PS1PS2_ON	NXJx		24	T2	009	001		6	12	1, 2
33	PS1PS2_ON_RTN	NXJx		24	T2	009	001		6	12	1, 2, 3
34	SPARE										
35	SPARE										
36	SPARE										
37	SPARE										
38	PS2_ON	NXJx		24	T2	010	001		6	12	1, 2
39	PS2_ON_RTN	NXJx		24	T2	010	001		6	12	1, 2, 3
40	PS1PS2_SD_DISABL	NXJx		24	T2	011	001		6	12	1, 2
41	PS1PS2_SD_DISABL_RTN	NXJx		24	T2	011	001		6	12	1, 2, 4
42	SPARE										

Notes:

1. Interface cable outer shield bonded to shell of harness connector.
2. All twisted pair signals will be enclosed in an overall shield.
3. Common return group 1 (6 places)
4. Common return group 2 (4 places)

Table IIIc. MODP3: BDU Commands Interconnections (cont'd)

Pin	Function	Destination		Wire Size	Wire Type	Twist Group	Shield Group	Color (TBD 6)	Interface Circuit (Figure #)	Timing Diagram (Figure #)	Notes
		Connector (TBD 1)	Pin (TBD 5)								
43	SPARE										
44	SPARE										
45	PS1PS2_SD_ENABL	NXJx		24	T2	012	001		6	12	1, 2
46	PS1PS2_SD_ENABL_RTN	NXJx		24	T2	012	001		6	12	1, 2, 3
47	SURVHTR_A_ENABL	NXJx		24	T2	013	001		6	12	1, 2
48	SURVHTR_A_ENABL_RTN	NXJx		24	T2	013	001		6	12	1, 2, 3
49	SPARE										
50	SPARE										
51	SURVHTR_B_ENABL	NXJx		24	T2	014	001		6	12	1, 2
52	SURVHTR_B_ENABL_RTN	NXJx		24	T2	014	001		6	12	1, 2, 3
53	SURVHTRS_DISABL	NXJx		24	T2	015	001		6	12	1, 2
54	SURVHTRS_DISABL_RTN	NXJx		24	T2	015	001		6	12	1, 2, 4

ASD–EW 2051 3–89
Size A
MISP7
MISJ8 (MIIJ8)
F BUS A
Segment ID]
MISP8
Size A
MXJx
[Harness Segment ID]
MXJx
[Harn
20008845
Sheet 19

Notes:

1. Interface cable outer shield bonded to shell of harness connector.
2. All twisted pair signals will be enclosed in an overall shield.
3. Common return group 1 (6 places)
4. Common return group 2 (4 places)

Table IIId. MODP4: BDU Telemetry Interconnections

Pin	Function	Destination		Wire Size	Wire Type	Twist Group	Shield Group	Color (TBD 6)	Interface Circuit (Figure #)	Timing Diagram (Figure #)	Notes
		Connector (TBD 1)	Pin (TBD 5)								
1	TR_RC_CLDSTG_HI	NXJx		24	T2	001	002		7	13	1, 2
2	TR_RC_CLDSTG_HI_RTN	NXJx		24	T2	001	002		7	13	1, 2
3	SPARE										
4	TR_AOP_BY_RC	NXJx		24	T2	002	002		7	13	1, 2
5	TR_AOP_BY_RC_RTN	NXJx		24	T2	002	002		7	13	1, 2
6	SPARE										
7	SPARE										
8	TR_MF_NEAR_KM3	NXJx		24	T2	003	002		7	13	1, 2
9	TR_MF_NEAR_KM3_RTN	NXJx		24	T2	003	002		7	13	1, 2
10	SPARE										
11	SPARE										
12	SPARE										
13	TR_MF_OB_BLKHD	NXJx		24	T2	004	002		7	13	1, 2
14	TR_MF_OB_BLKHD_RTN	NXJx		24	T2	004	002		7	13	1, 2
15	SPARE										
16	TR_ME_NX_HEATSINK	NXJx		24	T2	005	002		7	13	1, 2
17	TR_ME_NX_HEATSINK_RTN	NXJx		24	T2	005	002		7	13	1, 2
18	SPARE										
19	TR_SA_MTR_ENCDR	NXJx		24	T2	006	002		7	13	1, 2
20	TR_SA_MTR_ENCDR_RTN	NXJx		24	T2	006	002		7	13	1, 2
21	SPARE										
22	TR_FAM_RADIATOR	NXJx		24	T2	007	002		7	13	1, 2

Notes:

1. Interface cable outer shield bonded to shell of harness connector.
2. All twisted pair signals will be enclosed in an overall shield.

Table IIId. MODP4: BDU Telemetry Interconnections (cont'd)

Pin	Function	Destination		Wire Size	Wire Type	Twist Group	Shield Group	Color (TBD 6)	Interface Circuit (Figure #)	Timing Diagram (Figure #)	Notes
		Connector (TBD 1)	Pin (TBD 5)								
23	TR_FAM_RADIATOR_RTN	NXJx		24	T2	007	002		7	13	1, 2
24	SPARE										
25	TR_SAM_RADIATOR	NXJx		24	T2	008	002		7	13	1, 2
26	TR_SAM_RADIATOR_RTN	NXJx		24	T2	008	002		7	13	1, 2
27	SPARE										
28	TR_ME_PSRADIATOR	NXJx		24	T2	009	002		7	13	1, 2
29	TR_ME_PSRADIATOR_RTN	NXJx		24	T2	009	002		7	13	1, 2
30	SPARE										
31	SPARE										
32	SPARE										
33	CR_NAD_1_LATCHED	NXJx		24	T2	010	003		8	14	1, 2
34	CR_NAD_1_LATCHED_RTN	NXJx		24	T2	010	003		8	14	1, 2
35	CR_NAD_2_LATCHED	NXJx		24	T2	011	003		8	14	1, 2
36	CR_NAD_2_LATCHED_RTN	NXJx		24	T2	011	003		8	14	1, 2
37	SPARE										
38	SPARE										
39	SPARE										
40	SPARE										
41	SPARE										
42	SPARE										
43	SPARE										
44	CR_SVD_1_LATCHED	NXJx		24	T2	012	003		8	14	1, 2

Notes:

1. Interface cable outer shield bonded to shell of harness connector.
2. All twisted pair signals will be enclosed in an overall shield.

Table IIId. MODP4: BDU Telemetry Interconnections (cont'd)

Pin	Function	Destination		Wire Size	Wire Type	Twist Group	Shield Group	Color (TBD 6)	Interface Circuit (Figure #)	Timing Diagram (Figure #)	Notes
		Connector (TBD 1)	Pin (TBD 5)								
45	CR_SVD_1_LATCHED_RTN	NXJx		24	T2	012	003		8	14	1, 2
46	CR_SVD_2_LATCHED	NXJx		24	T2	013	003		8	14	1, 2
47	CR_SVD_2_LATCHED_RTN	NXJx		24	T2	013	003		8	14	1, 2
48	SPARE										
49	SPARE										
50	SPARE										
51	SPARE										
52	SPARE										
53	SPARE										
54	CR_SDD_LATCHED	NXJx		24	T2	014	003		8	14	1, 2
55	CR_SDD_LATCHED_RTN	NXJx		24	T2	014	003		8	14	1, 2
56	CR_CP_A_ON	NXJx		24	T2	015	003		8	14	1, 2
57	CR_CP_A_ON_RTN	NXJx		24	T2	015	003		8	14	1, 2
58	SPARE										
59	SPARE										
60	SPARE										
61	SPARE										
62	SPARE										
63	SPARE										
64	SPARE										
65	CR_CP_B_ON	NXJx		24	T2	016	003		8	14	1, 2
66	CR_CP_B_ON_RTN	NXJx		24	T2	016	003		8	14	1, 2

Notes:

1. Interface cable outer shield bonded to shell of harness connector.
2. All twisted pair signals will be enclosed in an overall shield.

Table IIId. MODP4: BDU Telemetry Interconnections (cont'd)

Pin	Function	Destination		Wire Size	Wire Type	Twist Group	Shield Group	Color (TBD 6)	Interface Circuit (Figure #)	Timing Diagram (Figure #)	Notes
		Connector (TBD 1)	Pin (TBD 5)								
67	SPARE										
68	SPARE										
69	SPARE										
70	SPARE										
71	SPARE										
72	SPARE										
73	SPARE										
74	SPARE										
75	SPARE										
76	SPARE										
77	CR_ENABL_FAILSAF	NXJx		24	T2	017	003		8	14	1, 2
78	CR_ENABL_FAILSAF_RTN	NXJx		24	T2	017	003		8	14	1, 2
79	SPARE										
80	SPARE										
81	CR_PS1_ON	NXJx		24	T2	018	003		8	14	1, 2
82	CR_PS1_ON_RTN	NXJx		24	T2	018	003		8	14	1, 2
83	SPARE										
84	CR_PS2_ON	NXJx		24	T2	019	003		8	14	1, 2
85	CR_PS2_ON_RTN	NXJx		24	T2	019	003		8	14	1, 2
86	CR_PS1_SD_ENABL	NXJx		24	T2	020	003		8	14	1, 2
87	CR_PS1_SD_ENABL_RTN	NXJx		24	T2	020	003		8	14	1, 2
88	SPARE										

Notes:

1. Interface cable outer shield bonded to shell of harness connector.
2. All twisted pair signals will be enclosed in an overall shield.

Table IIId. MODP4: BDU Telemetry Interconnections (cont'd)

Pin	Function	Destination		Wire Size	Wire Type	Twist Group	Shield Group	Color (TBD 6)	Interface Circuit (Figure #)	Timing Diagram (Figure #)	Notes
		Connector (TBD 1)	Pin (TBD 5)								
89	SPARE										
90	SPARE										
91	SPARE										
92	CR_PS2_SD_ENABL	NXJx		24	T2	021	003		8	14	1, 2
93	CR_PS2_SD_ENABL_RTN	NXJx		24	T2	021	003		8	14	1, 2
94	CR_SRVHTRA_ENABL	NXJx		24	T2	022	003		8	14	1, 2
95	CR_SRVHTRA_ENABL_RTN	NXJx		24	T2	022	003		8	14	1, 2
96	SPARE										
97	SPARE										
98	CR_SRVHTRB_ENABL	NXJx		24	T2	023	003		8	14	1, 2
99	CR_SRVHTRB_ENABL_RTN	NXJx		24	T2	023	003		8	14	1, 2
100	SPARE										

Notes:

1. Interface cable outer shield bonded to shell of harness connector.
2. All twisted pair signals will be enclosed in an overall shield.

Table IIIe. MODP5: TM&F Bus – Side A Interconnections

Contact	Function	Destination		Wire Size	Wire Type	Twist Group	Shield Group	Color (TBD 6)	Interface Circuit (Figure #)	Timing Diagram (Figure #)	Notes
		Connector (TBD 1)	Pin								
Center	MODIS TM&F BUS A HI	NXJx	Center	24	Twinax	N/A	N/A		9	15	1
Intermediate	MODIS TM&F BUS A LO	NXJx	Intermediate	24	Twinax	N/A	N/A		9	15	1
Outer shield	MODIS TM&F BUS A SHIELD	NXJx	Outer Shield	N/A	Twinax	N/A	N/A		9	15	1

Table IIIf. MODP6: TM&F Bus – Side B Interconnections

Contact	Function	Destination		Wire Size	Wire Type	Twist Group	Shield Group	Color (TBD 6)	Interface Circuit (Figure #)	Timing Diagram (Figure #)	Notes
		Connector (TBD 1)	Pin								
Center	MODIS TM&F BUS B HI	NXJx	Center	24	Twinax	N/A	N/A		9	15	1
Intermediate	MODIS TM&F BUS B LO	NXJx	Intermediate	24	Twinax	N/A	N/A		9	15	1
Outer shield	MODIS TM&F BUS B SHIELD	NXJx	Outer Shield	N/A	Twinax	N/A	N/A		9	15	1

Notes:

N/A Not applicable

1. NXJx is a single triaxial contact connector.

Table IIIg. MODP7: C&T Bus A Interconnections

Contact	Function	Destination		Wire Size	Wire Type	Twist Group	Shield Group	Color (TBD 6)	Interface Circuit (Figure #)	Timing Diagram (Figure #)	Notes
		Connector (TBD 1)	Pin								
Center	MODIS C&T BUS A HI	NXJx	Center	24	Twinax	N/A	N/A		10	16	1
Intermediate	MODIS C&T BUS A LO	NXJx	Intermediate	24	Twinax	N/A	N/A		10	16	1
Outer shield	MODIS C&T BUS A SHIELD	NXJx	Outer Shield	N/A	Twinax	N/A	N/A		10	16	1

Table IIIh. MODP8: C&T Bus B Interconnections

Contact	Function	Destination		Wire Size	Wire Type	Twist Group	Shield Group	Color (TBD 6)	Interface Circuit (Figure #)	Timing Diagram (Figure #)	Notes
		Connector (TBD 1)	Pin								
Center	MODIS C&T BUS B HI	NXJx	Center	24	Twinax	N/A	N/A		10	16	1
Intermediate	MODIS C&T BUS B LO	NXJx	Intermediate	24	Twinax	N/A	N/A		10	16	1
Outer shield	MODIS C&T BUS B SHIELD	NXJx	Outer Shield	N/A	Twinax	N/A	N/A		10	16	1

Notes:

N/A Not applicable

1. NXJx is a single triaxial contact connector.

Table IIIi. MODP9: High Rate Data Link – Side A – HI Interconnections

Contact	Function	Destination		Wire Size	Wire Type	Twist Group	Shield Group	Color (TBD 6)	Interface Circuit (Figure #)	Timing Diagram (Figure #)	Notes
		Connector (TBD 1)	Pin								
Center	MODIS HRDL A HI	NXJx	Center	16	G2 Coax	N/A	N/A		11	17	1
Outer shield	MODIS HRDL A HI SHIELD	NXJx	Outer Shield	N/A	G2 Coax	N/A	N/A		11	17	1

Table IIIj. MODP10: High Rate Data Link – Side A – LO Interconnections

Contact	Function	Destination		Wire Size	Wire Type	Twist Group	Shield Group	Color (TBD 6)	Interface Circuit (Figure #)	Timing Diagram (Figure #)	Notes
		Connector (TBD 1)	Pin								
Center	MODIS HRDL A LO	NXJx	Center	16	G2 Coax	N/A	N/A		11	17	1
Outer Shield	MODIS HRDL A LO SHIELD	NXJx	Outer Shield	N/A	G2 Coax	N/A	N/A		11	17	1

Notes:

N/A Not applicable

1. NXJx is a single coaxial contact connector.

Table IIIk. MODP11: High Rate Data Link – Side B – HI Interconnections

Contact	Function	Destination		Wire Size	Wire Type	Twist Group	Shield Group	Color (TBD 6)	Interface Circuit (Figure #)	Timing Diagram (Figure #)	Notes
		Connector (TBD 1)	Pin								
Center	MODIS HRDL B HI	NXJx	Center	16	G2 Coax	N/A	N/A		11	17	1
Outer shield	MODIS HRDL B HI SHIELD	NXJx	Outer Shield	N/A	G2 Coax	N/A	N/A		11	17	1

Table IIIm. MODP12: High Rate Data Link – Side B – LO Interconnections

Contact	Function	Destination		Wire Size	Wire Type	Twist Group	Shield Group	Color (TBD 6)	Interface Circuit (Figure #)	Timing Diagram (Figure #)	Notes
		Connector (TBD 1)	Pin								
Center	MODIS HRDL B LO	NXJx	Center	16	G2 Coax	N/A	N/A		11	17	1
Outer Shield	MODIS HRDL B LO SHIELD	NXJx	Outer Shield	N/A	G2 Coax	N/A	N/A		11	17	1

Notes:

N/A Not applicable

1. Jx is a single coaxial contact connector.

(TBD 7)

Figure 5. Power Interface Circuit

Size	Code Ident No.		
A	49671	20008845	Sheet 29

(TBD 7)

Figure 6. BDU Relay Drive Command Interface Circuit(s)

Size	Code Ident No.		
A	49671	20008845	Sheet 30

(TBD 7)

Figure 7. BDU Passive Analog Telemetry Interface Circuit(s)

Size	Code Ident No.		
A	49671	20008845	
			Sheet 31

(TBD 7)

Figure 8. BDU Passive Bi–Level Telemetry Interface Circuit(s)

Size	Code Ident No.		
A	49671	20008845	
			Sheet 32

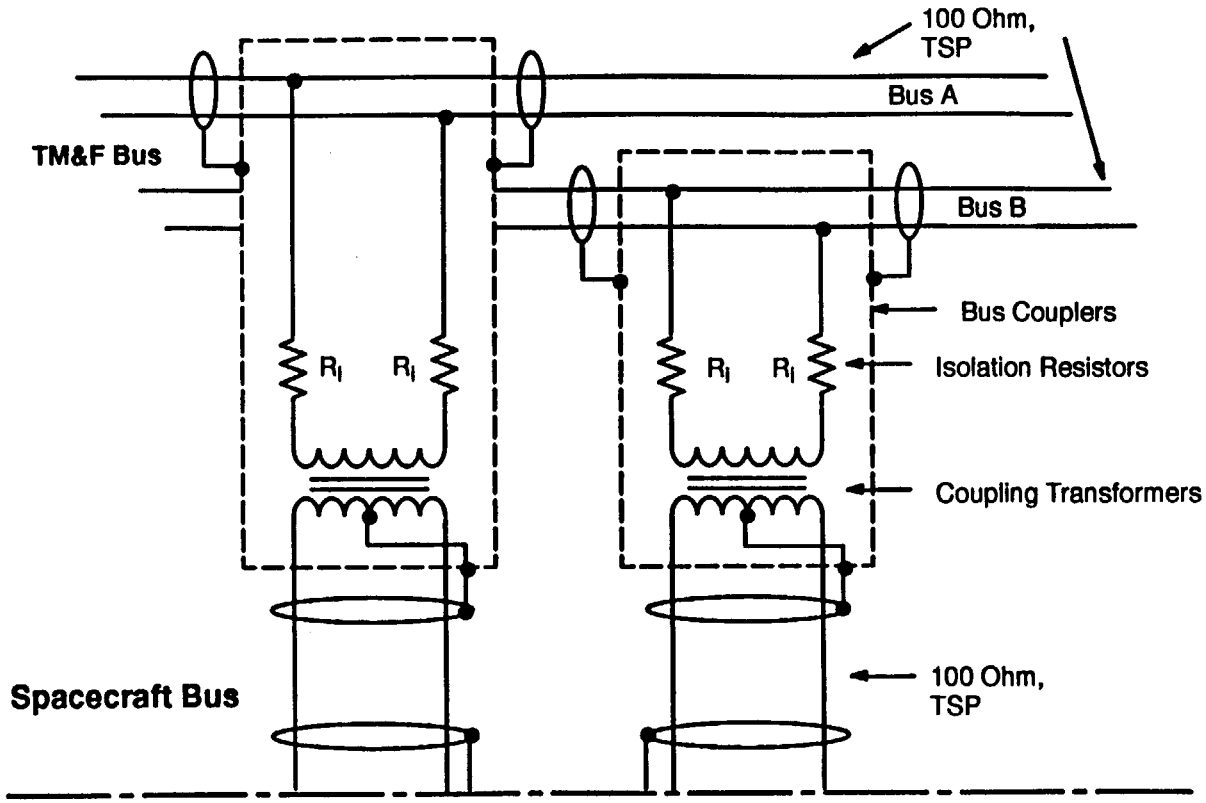

Instrument (TBD 7)

Notes:

TSP Twisted shielded pair

1. Cable characteristic impedance (Z0) = 100 ohms
2. Proposed cable type = GORE CXN2702

Figure 9. Time Mark and Frequency Bus Interface Circuit

(TBD 7)

Figure 10. Command and Telemetry Bus Interface Circuit

Size	Code Ident No.		
A	49671	20008845	
			Sheet 34

(TBD 7)

Figure 11. Science Data Interface Circuit

Size	Code Ident No.		
A	49671	20008845	Sheet 35

(TBD 8)

Figure 12. BDU Relay Drive Command Timing Diagram(s)

(TBD 8)

Figure 13. BDU Passive Analog Telemetry Timing Diagram(s)

(TBD 8)

Figure 14. BDU Passive Bi–Level Telemetry Timing Diagram(s)

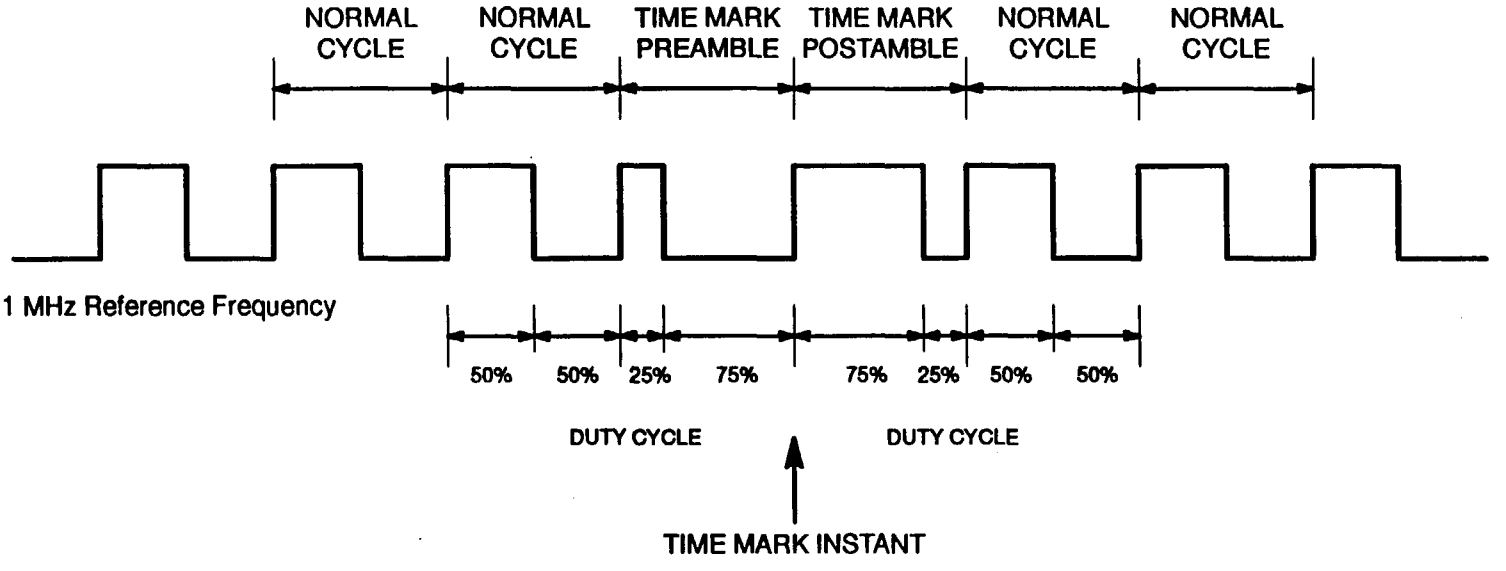

Figure 15. Time Mark and Frequency Bus Timing Diagram

(TBD 8)

Figure 16. Command and Telemetry Bus Timing Diagram

(TBD 8)

Figure 17. Science Data Timing Diagram

2 POWER

1. The instrument power consumption (by mode) is shown in Table IV.

2. Turn–on, turn–off, and significant mode switching transients are shown in Figures 18 through 20.

3. Each power feed side is fused as shown in Figure 5. Test points for fuse verification are located on [pin **#(TBD 9)**, connector **#(TBD 9)**] of the Power Equipment Module.

Table IV. Power Consumption

Mode #	Mode	Power (Watts) Average	Power (Watts) Peak	Time (Minutes)	Use
0	Launch	0	0	–	Once
1	Survival	100	100	–	As required
2	Safe	124	127	–	As required
3	Standby (Utility activity)	124	127	–	As required
4	Outgas	206	215	3 days	Initial/as required
5	Science (day or night)	159	162	100	~continuous
	• with SD/SDSM cal	162	206	12*	1X/Wk
	• with SRCA spectral cal	196	228	72*	1X/Mo
	• with SRCA radiometric cal	194	228	57*	1X/Mo
	• with SRCA registration cal	194	228	78*	1X/3Mo
	• with blackbody heated cal	197	200	40*	1X/Mo
	• with space view cal	159	162	–	~continuous
	1–orbit average power % estimated % calculated % actual	186.2 0 100 0	186.2 0 100 0		
	2–orbit average power % estimated % calculated % actual	172.4 0 100 0	172.4 0 100 0		

Notes:

1. Peak loads are due to configuration mechanism transients and are very short, <0.01 orbit duty cycle.
2. *Time for Science with cal is portion of 100–minute orbit that cal device is On.
3. Modes 2 and 3 include 100W maximum survival heater power. Minimum power is shown for Mode 3; maximum power can approach 200W for short, varied utility duration.
4. Power by mode as of 28 May 1993.
   Orbit average power as of 30 April 1993.

(TBD 10)

Figure 18. Turn–On Transient

Size	Code Ident No.		
A	49671	20008845	Sheet 44

(TBD 10)

Figure 19. Turn–Off Transient

Size	Code Ident No.		
A	49671	20008845	
			Sheet 45

(TBD 10)

Figure 20. [(TBD 10) Mode Switch] Transient

3 ELECTROMAGNETIC COMPATIBILITY

1. The instrument conducted and radiated emissions sources are shown in Table V.

2. The instrument conducted and radiated susceptibilities are shown in Table VI.

3. The instrument magnetic properties are shown in Table VII.

4. The instrument magnetic susceptibilities are shown in Table VIII.

5. The results of the instrument conducted and radiated emissions tests are shown in Figures 21 through 24.

6. The results of the instrument conducted and radiated susceptibility tests are shown in Figures 25 through 29.

7. The results of the instrument magnetic properties tests are shown in Figure 30.

Table V. Emissions (TBD 11)

Source	Location	Frequency (Hz)	Emission Range

Table VI. Susceptibility (TBD 11)

Item	Location	Frequency (Hz)	Susceptibility Range

Table VII. Magnetic Properties (TBD 11)

Magnetic Fields		Dipole Moment
Intensity (μT)	Direction	(Am^2)

Table VIII. Magnetic Susceptibility (TBD 11)

Item	Susceptibility

Notes:

A Ampere
Hz Hertz
m Meter
T Tesla

Size	Code Ident No.	
A	49671	20008845
		Sheet 48

(TBD 12)

Figure 21. Conducted Emissions Test Data – Power Leads (CE01)

(TBD 12)

Figure 22. Conducted Emissions Test Data – Power Leads (CE03)

(TBD 12)

Figure 23. Radiated Emissions Test Data – Electric Field (RE02)

(TBD 12)

Figure 24. Radiated Emissions Test Data – Magnetic Field (RE04)

(TBD 12)

Figure 25. Conducted Susceptibility Test Data – Power Leads (CS01)

(TBD 12)

Figure 26. Conducted Susceptibility Test Data – Power Leads (CS02)

(TBD 12)

Figure 27. Conducted Susceptibility Test Data – Power Leads (CS06)

(TBD 12)

Figure 28. Radiated Susceptibility Test Data – Magnetic Field (RS01)

(TBD 12)

Figure 29. Radiated Susceptibility Test Data – Electric Field (RS03)

(TBD 12)

Figure 30. Magnetic Properties Test Data

Table IX. Reference Documents*

Document Number	Date	Document Title	Source

* Table information will be filled in as required.

(This page intentionally left blank.)

Next Assembly	Used on
20008840	EOS–AM

First Application
EOS–AM

Revisions

Rev Draft 001

Ltr	Description	Date	Approved
001	Draft	07–16–93	

Revision Record Continued on Sheet _____

Contract No.	NAS5–32500
Written	C. Wilda
Date	
Approved	F. Komro
Date	
Approved	
Date	
Issued	G. Rauscher
Date	

MARTIN MARIETTA

POST OFFICE BOX 800
PRINCETON, NEW JERSEY 08543–080
TELEPHONE (609) 490–3400

Interface Control Drawing, Command and Telemetry, Earth Observing System AM Spacecraf to Moderate Resolution Imaging Spectroradiomet

Size	Code Ident No.	
A	49671	20008847

Approval Signatures

**IN ADDITION TO ECN AND CCB APPROVALS,
ALL CHANGES ON THIS DRAWING SHALL HAVE THE APPROVAL AND THE FULL AGREEMENT OF THE PARTIES LISTED BELOW.**

REV	Spacecraft Program Office	Date	Instrument Program Office	Date	Principal Investigator	Date
	(signature on file) M. Kavka	8/6/93	L. Candell		W. Barnes	

Size	Code ident No.	
A	49671	20008847
		Sheet 2

Table of Contents

Section	Title	Sheet
	Approval Signatures	2
1	INTRODUCTION	10
1.1	Purpose	10
1.2	Scope	10
1.3	Organization	10
2	REFERENCE DOCUMENTS	12
3	INSTRUMENT DESCRIPTION	13
3.1	General Description	13
3.2	Functional Description	16
3.3	Subsystem Abbreviations	16
4	MODES	20
4.1	Launch Mode	20
4.2	Survival Mode	20
4.3	Safe Mode	21
4.4	Standby Mode	21
4.5	Outgas Mode	21
4.6	Science Mode	22
4.6.1	Calibration with Solar Diffuser View	22
4.6.2	Calibration with Spectroradiometric Calibration Assembly View	22
4.6.3	Calibration with Blackbody View	22
4.6.4	Calibration with Space View	23
5	COMMANDS	25
5.1	[Command Function]	33
6	TELEMETRY	35
6.1	[Telemetry Function]	54
7	MICROPROCESSORS	56
7.1	Microprocessor Control	56
7.2	Microprocessor Operation	56
7.3	Microprocessor Functional Requirements	56
7.4	Microprocessor Memory Load	56
7.5	Microprocessor Memory Dump	56
7.6	Microprocessor Memory Error Detection	56
8	DATA FORMATS	57
8.1	Command and Telemetry Bus Messages	57
8.1.1	Command and Telemetry Bus Command Messages	57
8.1.2	Command and Telemetry Bus Health and Safety Telemetry Messages	57
8.1.3	Command and Telemetry Bus Housekeeping Telemetry Messages	57
8.2	Science Data Packets	57
8.2.1	Engineering Packets	57

Table of Contents (cont'd)

Section	Title	Sheet
8.2.2	Science Packets	57
8.3	Test Patterns	57
9	CONSTRAINTS	58
9.1	Testing Constraints	58
9.2	Operational Constraints	58
9.3	Environmental Constraints	58

List of Figures

Figure No.	Title	Sheet
1	MODIS Imaging Flow	14
2	MODIS Functional Block Diagram	18
3	MODIS Command and Telemetry Two–Character Subsystem Abbreviations	19
4	MODIS State Diagram	24
5–1	[Command] Schematic	34
6–1	[Telemetry] Schematic	55

List of Tables

Table No.	Title	Sheet
I	MODIS Spectral Bands	15
II	MODIS Command and Telemetry Two–Character Subsystem Abbreviations	17
III	Command List	26
III	Telemetry Acronym Structure	35
V	Telemetry List	36
VI	Science Data Rate	57

TBD LOG

ITEM	SECTION	PAGE	SUBJECT	RESPONSIBLE	DUE
TBD 1	4.1	20	Launch Mode description	J. Mehrten (SBRC)	instr CDR + 3 mo
TBD 2	4.1	20	Launch Mode telemetry definition	J. Mehrten (SBRC)	instr test – 3 mo
TBD 3	4.2	20	Survival Mode description	J. Mehrten (SBRC)	instr CDR + 3 mo
TBD 4	4.2	20	Survival Mode telemetry definition	J. Mehrten (SBRC)	instr test – 3 mo
TBD 5	4.3	21	Safe Mode description	J. Mehrten (SBRC)	instr CDR + 3 mo
TBD 6	4.3	21	Safe Mode telemetry definition	J. Mehrten (SBRC)	instr test – 3 mo
TBD 7	4.4	21	Standby Mode from Safe Mode description	J. Mehrten (SBRC)	instr CDR + 3 mo
TBD 8	4.4	21	Standby Mode from Outgas Mode description	J. Mehrten (SBRC)	instr CDR + 3 mo
TBD 9	4.4	21	Standby Mode from Science Mode description	J. Mehrten (SBRC)	instr CDR + 3 mo
TBD 10	4.4	21	Standby Mode telemetry definition	J. Mehrten (SBRC)	instr test – 3 mo
TBD 11	4.5	21	Outgas Mode description	J. Mehrten (SBRC)	instr CDR + 3 mo
TBD 12	4.5	21	Outgas Mode telemetry definition	J. Mehrten (SBRC)	instr test – 3 mo
TBD 13	4.6	22	Science Mode description	J. Mehrten (SBRC)	instr CDR + 3 mo
TBD 14	4.6	22	Science Mode telemetry definition	J. Mehrten (SBRC)	instr test – 3 mo
TBD 15	4.6.1	22	Cal with SD View Mode description	J. Mehrten (SBRC)	instr CDR + 3 mo
TBD 16	4.6.1	22	Cal with SD View Mode telemetry definition	J. Mehrten (SBRC)	instr test – 3 mo
TBD 17	4.6.2	22	Cal with SRCA View Mode description	J. Mehrten (SBRC)	instr CDR + 3 mo
TBD 18	4.6.2	22	Cal with SRCA View Mode telemetry definition	J. Mehrten (SBRC)	instr test – 3 mo
TBD 19	4.6.3	22	Cal with BB View Mode description	J. Mehrten (SBRC)	instr CDR + 3 mo
TBD 20	4.6.3	22	Cal with BB View Mode telemetry definition	J. Mehrten (SBRC)	instr test – 3 mo

TBD LOG (cont'd)

ITEM	SECTION	PAGE	SUBJECT	RESPONSIBLE	DUE
TBD 21	4.6.4	23	Cal with Space View Mode description	J. Mehrten (SBRC)	instr CDR + 3 mo
TBD 22	4.6.4	23	Cal with Space View Mode telemetry definition	J. Mehrten (SBRC)	instr test – 3 mo
TBD 23	Table III	26 to 32	Command list (7 places)	J. Mehrten (SBRC)	instr CDR + 3 mo
TBD 24	Table III	32	Higher level commands	J. Mehrten (SBRC)	instr test – 3 mo
TBD 25	5.1 Figure 5–1	33	Command description (3 places)	J. Mehrten (SBRC)	instr test – 3 mo
TBD 26	Figure 5–1	34	Command schematic	J. Mehrten (SBRC)	instr test – 3 mo
TBD 27	Table V	36 to 53	Telemetry list (18 places)	J. Mehrten (SBRC)	instr CDR + 3 mo
TBD 28	Table V	53	Processor status, pseudo, & eng tlm	J. Mehrten (SBRC)	instr test – 3 mo
TBD 29	6.1 Figure 6–1	54	Telemetry description (3 places)	J. Mehrten (SBRC)	instr test – 3 mo
TBD 30	Figure 6–1	55	Telemetry schematic	J. Mehrten (SBRC)	instr test – 3 mo
TBD 31	7.1 to 7.6	56	Microprocessors (6 places)	J. Mehrten (SBRC)	instr CDR + 3 mo
TBD 32	8 to 8.1.3 8.2.1 to 8.3	57	Data formats (8 places)	J. Mehrten (SBRC)	instr CDR + 3 mo
TBD 33	9 to 9.3	58	Constraints (4 places)	J. Mehrten (SBRC)	instr test – 3 mo

TBR LOG

ITEM	SECTION	PAGE	SUBJECT	RESPONSIBLE	DUE
TBR 1	Figure 4	24	Transition between Science and Outgas Modes	J. Mehrten (SBRC)	instr CDR + 3 mo

1 INTRODUCTION

1.1 Purpose

The Command and Telemetry Interface Control Drawing (C&T ICD), 20008847, when executed, represents an agreement of the detailed implementation of the command and telemetry interfaces of the Moderate Resolution Imaging Spectroradiometer (MODIS) with the Earth Observing System (EOS) AM Spacecraft. This drawing, together with the Mechanical Interface Control Drawing (MICD) Drawing, 20008841, MICD Tables, 20008842, Thermal Interface Control Drawing (TICD), 20008843, Electrical Interface Control Drawing (EICD) Schematic, 20008844, EICD Tables, 20008845, and Integration and Test Interface Control Drawing (I&T ICD), 20008846, describe the details of the interfaces between the EOS–AM Spacecraft and MODIS. The top–level instrument Interface Control Drawing (ICD), 20008840, provides the instrument ICD tree and revision status for all sub–tier instrument ICDs.

The C&T ICD describes the operating characteristics of the MODIS. Its purpose is to provide to the integration and test (I&T) personnel an understanding of how the MODIS is operated and how its operation and performance are monitored.

1.2 Scope

This C&T ICD is limited to the description of operation of the MODIS necessary to execute the I&T and launch activities of the EOS–AM program and, as such, concentrates on commands and telemetry via the Bus Data Unit (BDU) and Command and Telemetry (C&T) bus, descriptions of modes to be tested, and instrument operating constraints during test. Science and engineering data descriptions are limited to that of format and content since they are processed during test by the Instrument Ground Support Equipment (IGSE). The material contained herein is not intended to define on–orbit operational requirements.

1.3 Organization

Section 1 provides a brief description of the document's purpose followed by a statement of its scope and concluding with a description of its organization.

Section 2 provides a list of the documents referenced in the text and the source of each such document.

Section 3 provides a description of the instrument, focusing on its operation but also describing its features.

Section 4 contains detailed descriptions of all instrument modes, including operating, test, calibration, and contingency modes.

Section 5 provides a description of each command, including its purpose, its effects, how it can be verified, prerequisite telemetry state, and other associated commands.

Section 6 describes all telemetry associated with the instrument, including health and safety telemetry sampled via the Bus Data Unit (BDU) and housekeeping telemetry sampled via the C&T bus. The content of the engineering data embedded in the science data stream is provided, but the telemetry is not described.

Section 7 describes the use of microprocessors.

Section 8 describes the data format.

Section 9 describes all constraints associated with operating and testing the instrument.

2 REFERENCE DOCUMENTS

The following documents provide additional information relative to the functioning of the MODIS command and data handling subsystem. The information contained in these documents is deemed to be supplemental in nature and hence is not included herein.

Reference documents will be provided as required.

3 INSTRUMENT DESCRIPTION

3.1 General Description

MODIS is a passive imaging spectroradiometer, which views the earth, calibration devices and space by means of a continuously rotating scan mirror as illustrated in Figure 1. It collects data from both sides of the scan mirror with four focal plane assemblies (FPAs) containing 36 bands spread over 5 spectral regions (412 nm to 14,235 nm) as summarized in Table I. Ground resolution varies with 29 bands at 1000 m, 5 at 500 m, and 2 at 250 m. The number of detectors per band are 10 for 1000 m resolution bands, 20 for 500 m, and 40 for 250 m. Twenty of the total 490 detectors are used in time division integration (TDI) resulting in a net total of 470 channels sent to the ground. At a 705 km orbit, the optical arrangement and scan mirror coverage of ±55° from nadir, result in a cross track swath of 2330 km and an along track swath of 10 km. MODIS has stringent radiometric, spectral center, spectral bandwidth, and spatial registration requirements. After on–orbit activation, it is anticipated to operate MODIS continuously.

MODIS has four high performance on–board calibrators: an ambient or heated Blackbody (BB); a Solar Diffuser (SD) with 2 levels of reflectance; a Solar Diffuser Stability Monitor (SDSM), which compares the Solar Diffuser reflectance to direct solar view levels, and a Spectral Radiometric Calibration Assembly (SRCA) which operates in 4 modes (spectral, spectral self calibration, spatial, and radiometric). In addition to these external calibrators, MODIS has available an electronic calibration, which temporarily disconnects the FPA sensors, and in their place provides signals, which results in stair step signals passing through the amplifier/digitizing chain. Electronic calibration collects occur over the Solar Diffuser (SD) view for photovoltaic (PV) FPA Bands 1 – 26 and over the space view for photoconductive (PC) FPA Bands 31 – 36.

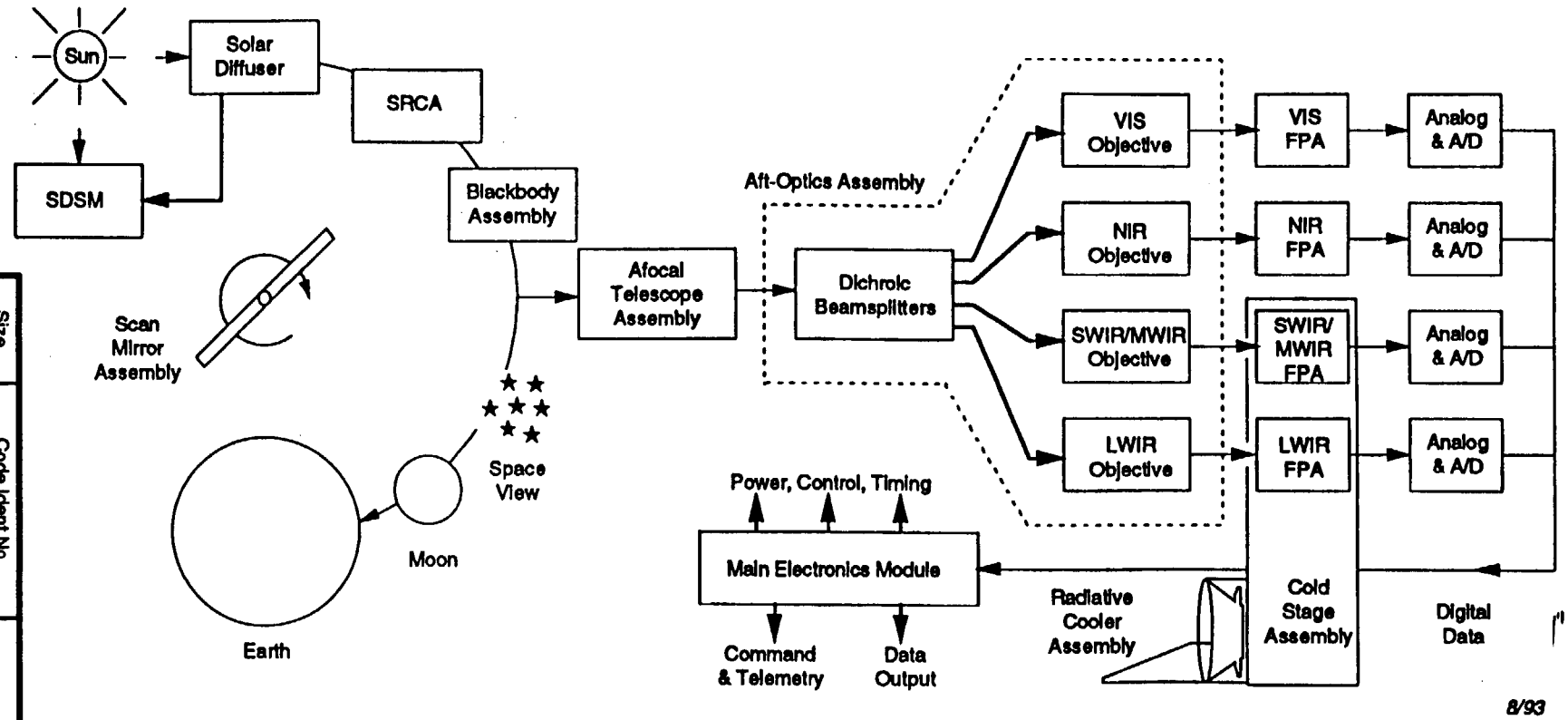

Figure 1. MODIS Imaging Flow

Table I. MODIS Spectral Bands

Band	Center (nm)	Bandwidth (nm)	FPA Spectral Area	Ground Resolution (m)
1	645	50	NIR	250
2	858	35	NIR	250
3	469	20	VIS	500
4	555	20	VIS	500
5	1240	20	SWIR/MWIR	500
6	1640	24.6	SWIR/MWIR	500
7	2130	50	SWIR/MWIR	500
8	412	15	VIS	1000
9	443	10	VIS	1000
10	488	10	VIS	1000
11	531	10	VIS	1000
12	551	10	VIS	1000
13	667	10	NIR	1000
14	678	10	NIR	1000
15	748	10	NIR	1000
16	869	15	NIR	1000
17	905	30	NIR	1000
18	936	10	NIR	1000
19	940	50	NIR	1000
20	3750	180	SWIR/MWIR	1000
21	3959	59.4	SWIR/MWIR	1000
22	3959	59.4	SWIR/MWIR	1000
23	4050	60.8	SWIR/MWIR	1000
24	4465	65	SWIR/MWIR	1000
25	4515	67	SWIR/MWIR	1000
26	1375	30	SWIR/MWIR	1000
27	6715	360	LWIR	1000
28	7325	300	LWIR	1000
29	8550	300	LWIR	1000
30	9730	300	LWIR	1000
31	11030	500	LWIR	1000
32	12020	500	LWIR	1000
33	13335	300	LWIR	1000
34	13635	300	LWIR	1000
35	13935	300	LWIR	1000
36	14235	300	LWIR	1000

Notes:

FPA	Focal Plane Assembly
LWIR	Long–wave infrared (spectral region: 6000 – 14400 nm)
MWIR	Mid–wave infrared (spectral region: 3000 – 6000 nm)
NIR	Near infrared (spectral region: 700 – 1060 nm)
m	Meters
nm	Nanometers
SWIR	Short–wave infrared (spectral region: 1060 – 3000 nm)
VIS	Visible spectral region: 400 – 700 nm

3.2 Functional Description

The hardware functional elements of MODIS are shown by its functional block diagram in Figure 2, which can be related to the imaging flow depicted in Figure 1. The short–wave infrared (SWIR)/mid–wave infrared (MWIR) and long–wave infrared (LWIR) FPAs are cooled to ~85 K by the passive radiative cooler. The PV FPAs produce sampled analog output signals, which are amplified and digitized by the Space View Analog Module (SAM). PC detectors on the LWIR FPA produce continuous analog signals, which are preamplified by the Cooler Located Amplifier Module (CLAM, not separately depicted in Figure 2), then post amplified, integrated, and digitized by the Forward View Analog Module (FAM).

The Formatter (which contains a dedicated microprocessor), first–in–first–out (FIFO) and Fiber Distributed Data Interface (FDDI) circuits process the digitized sensor signals, format them into Consultative Committee for Space Data Systems (CCSDS) science packets and send them over the high rate science link to the spacecraft.

A limited number of command and telemetry signals are processed directly by the Bus Data Unit (BDU) discrete controls. The bulk of command and telemetry signals flow over the MIL–STD–1553 bus, and are processed by the Command & Telemetry microprocessor (CP). The CP also provides general control of all other subsystems. The CP contains the master system clock (48 MHz), which is counted down to 12 MHz for the single board computers in the CP and the Formatter. A 9.6 Mhz clock is provided to the Timing Generator, which provides the various frame and pixel clocks to the Formatter, to the FAM and SAM analog modules, and to the scan mirror drive electronics.

Other controllers within the MEM provide scan mirror drive, mechanism control of doors, temperature control of CFPA and outgas heaters, and control of calibration devices and related mechanisms.

3.3 Subsystem Abbreviations

For simplicity, two character abbreviations are used to identify MODIS subsystems for command and telemetry use. These are listed in Table II, and are also shown in the exploded view of MODIS in Figure 3, which also allows one to associate hardware shape with the functional blocks shown in Figure 2. These abbreviations are shorter than acronyms and abbreviations generally seen in other documents. Also, some of the subsystem elements defined here consist of hardware levels that are lower than configuration control items (e.g., printed wiring boards versus units). In general, the command and telemetry tabular lists in this document have a first sort by these two character subsystem abbreviations.

Table II. MODIS Command and Telemetry Two–Character Subsystem Abbreviations

Abbreviation	Subsystem
AO	Aft Optics (all major optical elements)
BB	Blackbody
CE	Calibrator Electronics (controls all cal devices)
CF	Cold Focal Plane (SWIR, MWIR, LWIR)
CP	Control Processor (Command & Telemetry)
DR	Doors (Space View, Nadir Aperture, Solar Diffuser)
FD	FDDI Formatter & Output Driver
FI	FIFO Memory
FR	Formatter (Format Controller & Engine)
MC	Mechanism Controller
ME	Main Electronics Module (MEM)
MF	Mainframe
PC	PC FPA by Analog Forward View Electronics (FAM)
PS	Power Supply
PV	PV FPAs by Analog Space View Electronics (SAM)
RC	Radiative Cooler
SA	Scan Mirror Assembly
SC	Spacecraft (S/C)
SD	Solar Diffuser
SE	Scan Mirror, Electronics & Encoder
SM	SD Stability Monitor (SDSM)
SR	Spectroradiometric Assy (SRCA)
SS	Sunshade
TC	Temperature Controller
TE	Telescope
TG	Timing Generator
TM	Telemetry Circuits
WF	Warm Focal Plane (VIS, NIR)

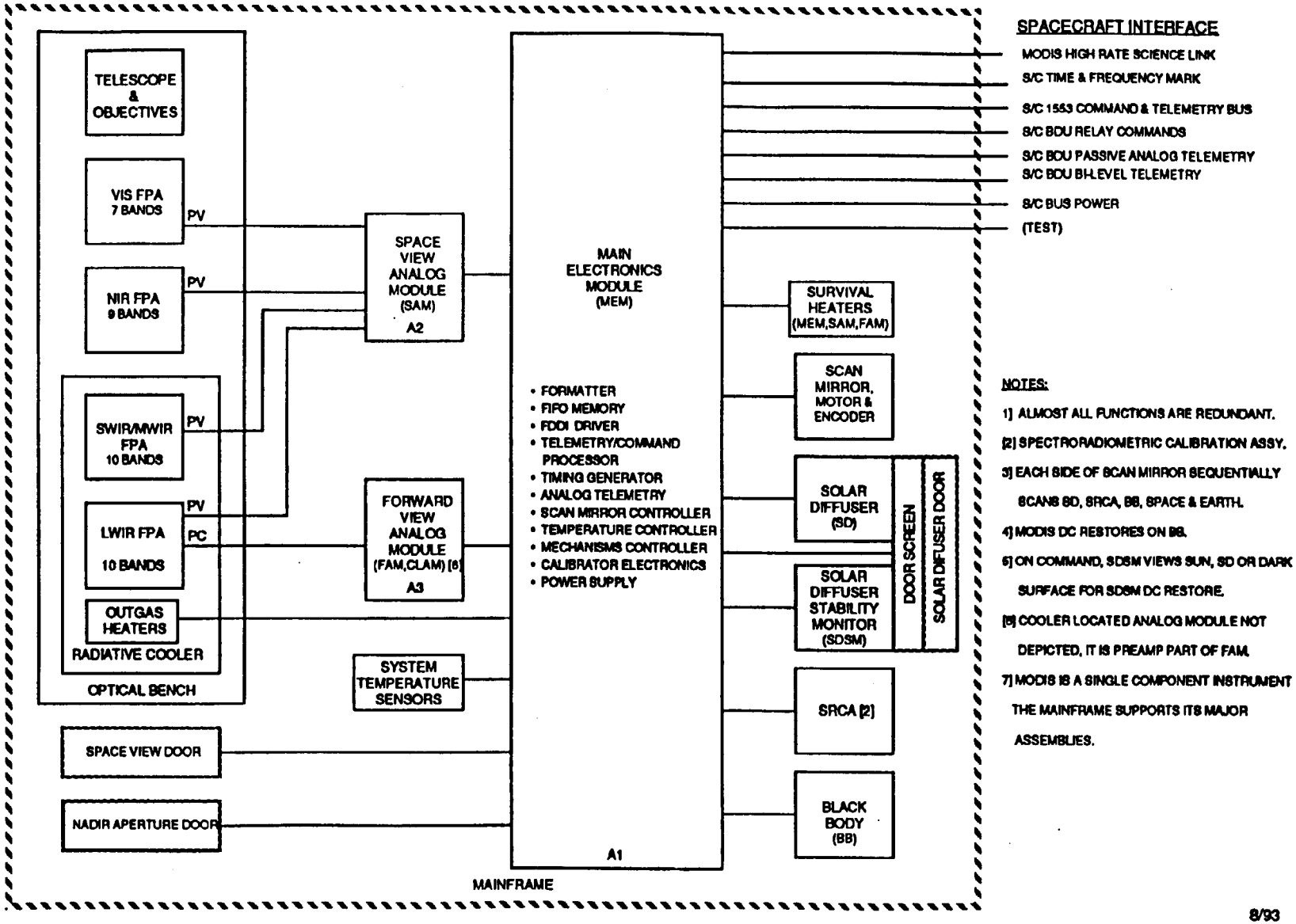

Figure 2. MODIS Functional Block Diagram

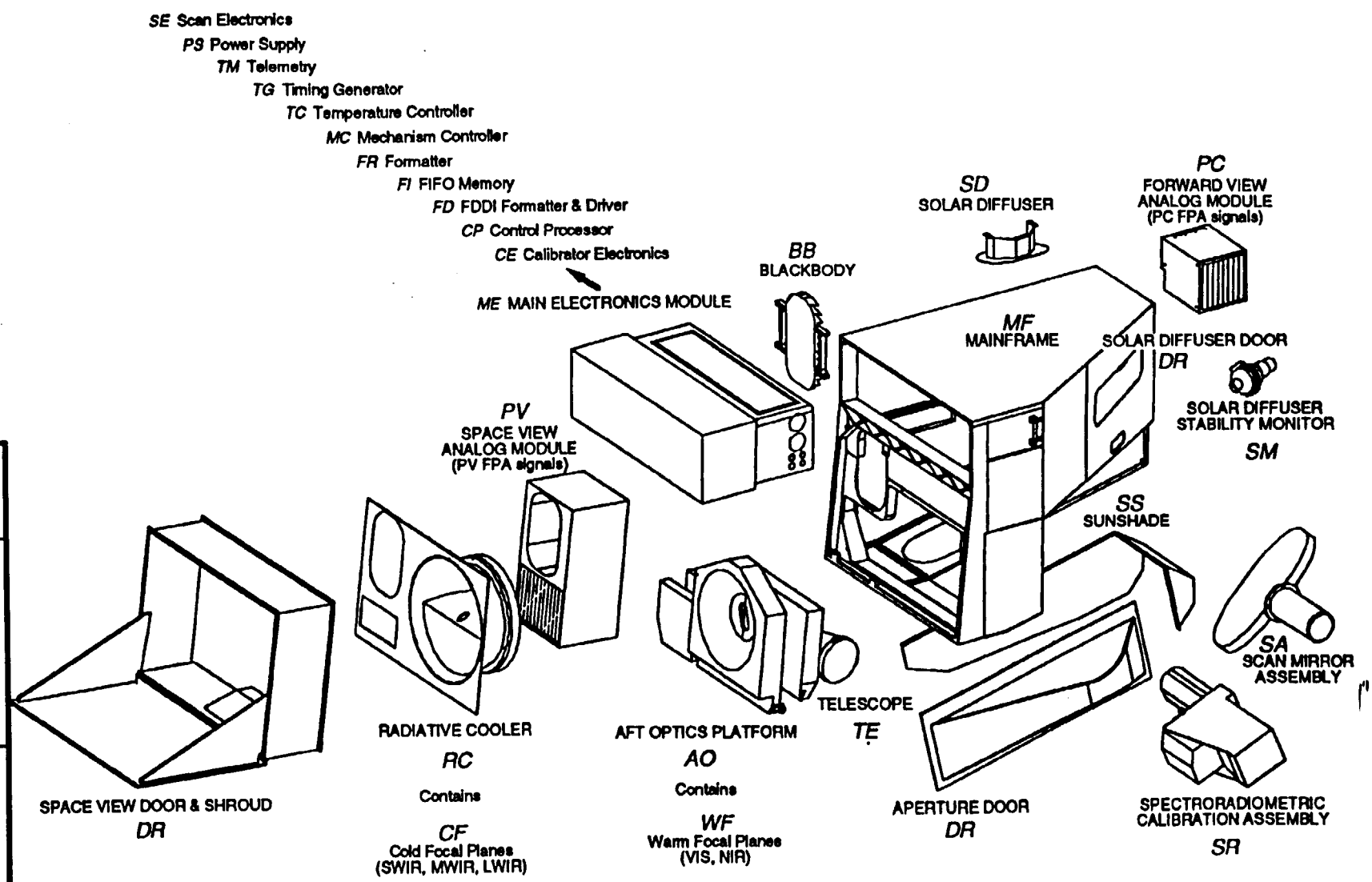

Most abbreviations relate directly to item name. PC and PV for analog modules relate by function.

8/93

Figure 3. MODIS Command and Telemetry Two–Character Subsystem Abbreviations

4 MODES

The MODIS modes define subsystem configurations to perform particular mission functions, which have particular power load and data rate characteristics. The data rate is either the day rate (10.1 Mbps) or the night rate (2.7 Mbps). Operational modes do not stipulate whether side A or side B is used in the case of redundant subsystems. The MODIS modes are listed below and described in the following sections.

Mode #	Mode Name
0	Launch
1	Survival
2	Safe
3	Standby (utility activity)
4	Outgas
5	Science (day or night)

- Calibration with solar diffuser view
- Calibration with SRCA view
- Calibration with blackbody view
- Calibration with space view

The MODIS state diagram is shown in Figure 4.

4.1 Launch Mode

Launch Mode (Mode #0) is the mode to which the MODIS is configured for launch. In Launch Mode the doors are closed and latched, all subsystems and power supplies are Off, and survival heaters are enabled. (Survival heaters cycle On/Off by thermostat).

Launch Mode is entered from Standby mode via the **(TBD 1)** Command Operating Procedure (COP). This COP sets commands to close and latch the doors, enable survival heaters, and turn all subsystems Off. BDU command PS1PS2_OFF_A or PS1PS2_OFF_B is required to turn the power supplies off.

A return to Launch Mode is not possible on–orbit because door latches are a one–time event and can only be reset manually.

Launch Mode is defined by **(TBD 2)** telemetry.

4.2 Survival Mode

Survival Mode (Mode #1) is the mode to which the MODIS is configured for survival in the event that spacecraft power consumption must be reduced to minimum. In Survival Mode the power supplies are Off and survival heaters are enabled.

Survival Mode is entered from any mode via the **(TBD 3)** COP. This COP sets commands to close the doors and turn all subsystems OFF. BDU command PS1PS2_OFF_A or PS1PS2_OFF_B is required to turn the power supplies off.

Survival Mode is defined by **(TBD 4)** telemetry.

4.3 Safe Mode

Safe Mode (Mode #2) is the mode to which the MODIS is configured when the instrument can no longer be guaranteed a stable and safe attitude. In Safe Mode the power supplies are On and all subsystems are Off except C&T.

Safe Mode is entered from any mode via the **(TBD 5)** COP. This COP sets commands to close the doors and turn all subsystems OFF except C&T. Safe Mode is also entered autonomously from any mode in the absence of the SCC OK indication for 5 major cycles.

Safe Mode is defined by **(TBD 6)** telemetry.

4.4 Standby Mode

Standby Mode (Mode #3) is the mode to which the MODIS is configured to establish and maintain instrument thermal stability prior to transition to Science Mode. In Standby Mode the MODIS is in the same basic configuration as Safe Mode, with other configuration choices used for utility activity, such as failsafe activation, memory upload/download, moving doors, or monitoring. The doors may be open or closed.

Standby Mode is entered from Safe Mode via the **(TBD 7)** COP. This COP sets commands to **(TBD 7)**. Standby Mode is entered from Outgas Mode via the **(TBD 8)** COP. This COP sets commands to turn off the outgas heaters and open the Space View Door and Nadir Aperture Door. Standby Mode is entered from Science Mode via the **(TBD 9)** COP. This COP sets commands to turn off all the bands.

Standby Mode is defined by **(TBD 10)** telemetry.

4.5 Outgas Mode

Outgas Mode (Mode #4) is the mode to which the MODIS is configured to outgas the instrument. In Outgas Mode the power supplies are On, C&T is On, cold and intermediate stage outgas heaters are On, and the Space View Door is in the outgas position. For initial on–orbit outgassing the Nadir Aperture Door and Solar Diffuser Door are closed and all other subsystems are off. Subsequent outgassing may be with doors open and VIS/NIR imaging or with the third stage outgas heater On.

Outgas Mode is entered from Standby Mode or Science Mode via the **(TBD 11)** COP. This COP sets commands to turn on the cold and intermediate stage outgas heaters and open the Space View Door to the outgas position.

Outgas Mode is defined by **(TBD 12)** telemetry.

4.6 Science Mode

Science Mode (Mode #5) is the mode to which the MODIS is configured for all science and calibration data collection. All bands are On. At night only bands B20–B36 are collected on earth scenes; all band data are for calibration devices. Calibration configuration choices are described in the following sections.

Science Mode is entered from Standby Mode via the **(TBD 13)** COP. This COP sets commands to turn on all the bands.

Science Mode is defined by **(TBD 14)** telemetry.

4.6.1 Calibration with Solar Diffuser View

Calibration with solar diffuser view consists of solar diffuser image collects for calibration of VIS, NIR and SWIR bands near the north pole; or solar diffuser stability calibration checks over 0.4–2.2 μm by SDSM collects of cavity (DC Restore), sun and solar diffuser; or viewing an electronic calibration ramp of bands B1–B30.

Calibration with solar diffuser view is entered from Science Mode via the **(TBD 15)** COP. This COP sets commands to configure the MODIS for calibration with solar diffuser view.

Calibration with solar diffuser view is defined by **(TBD 16)** telemetry.

4.6.2 Calibration with Spectroradiometric Calibration Assembly View

Calibration with SRCA view consists of VIS, NIR and SWIR image collects for spectral calibration; or spatial calibration; or spectral calibration and SRCA 0.4–0.9 μm self calibration data.

Calibration with SRCA view is entered from Science Mode via the **(TBD 17)** COP. This COP sets commands to configure the MODIS for calibration with SRCA view.

Calibration with SRCA view is defined by **(TBD 18)** telemetry.

4.6.3 Calibration with Blackbody View

Calibration with blackbody view consists of ambient or heated blackbody MWIR and LWIR collects. Precision blackbody temperatures are provided in the engineering packet of the science data.

Calibration with blackbody view is entered from Science Mode via the **(TBD 19)** COP. This COP sets commands to configure the MODIS for calibration with blackbody view.

Calibration with blackbody view is defined by **(TBD 20)** telemetry.

4.6.4 Calibration with Space View

Calibration with space view consists of normal cold space view; or occasional glimpse of the moon; or viewing an electronic calibration ramp of bands B31–B36.

Calibration with space view is entered from Science Mode via the **(TBD 21)** COP. This COP sets commands to configure the MODIS for calibration with space view.

Calibration with space view is defined by **(TBD 22)** telemetry.

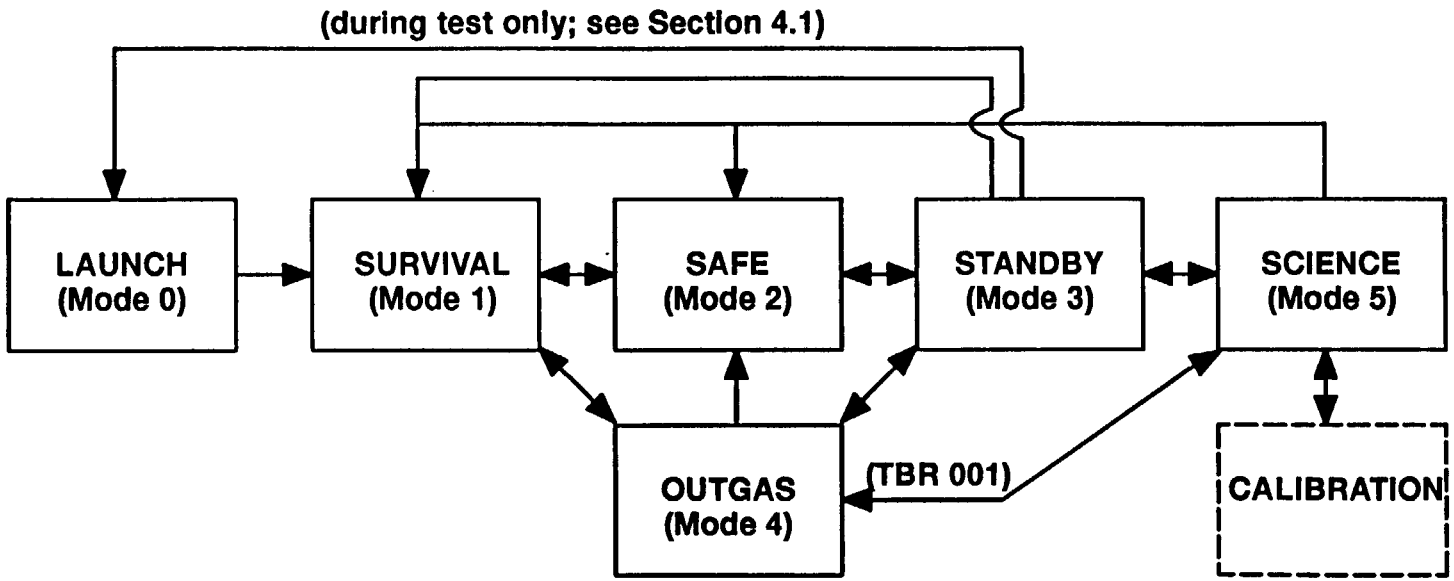

Figure 4. MODIS State Diagram

Size A
Code Ident No. 49671
20008847
Sheet 24

5 COMMANDS

The MODIS commands are listed in Table III and discussed in the following sections.

Table III. Command List (TBD 23)

ID #	Acronym (Note 3)	Command		Type (Note 4)	RT	SA	Format (Note 5)		Prereq ID #	Reference Section
		S/S	Description				Data 1	Data 2		
1	BB_AON_BOFF	CE		R		1				
2	BB_BON_AOFF	CE		R		1				
3	BB_OFF	CE		R		1				
4	CE_AON_BOFF	CE		R		1				
5	CE_BON_AOFF	CE		R		1				
6	CE_OFF	CE		R		1				
7	SDSM_AONBOFF	CE		R		1				
8	SDSM_BONAOFF	CE		R		1				
9	SDSM_OFF	CE		R		1				
10	SR_AON_BOFF	CE		R		1				
11	SR_BON_AOFF	CE		R		1				
12	SR_OFF	CE		R		1				
13	CPA_ON_BOFF	CP		SR		1				
14	CPB_ON_AOFF	CP		SR		1				
15	CP_STD_RESET	CP		SR		1				
16	CP_UPLD_RESET	CP		SR		1				
17	FDDI_AONBOFF	FD		R		1				
18	FDDI_A_RESET	FD		L		1				
19	FDDI_BONAOFF	FD		R		1				
20	FDDI_B_RESET	FD		L		1				

Notes:

RT Remote terminal
SA Subaddress
S/S Subsystem 2–alpha code defined in Table II
1. No entry indicates non–applicable or a "don't care" choice.
2. Table count is 130 commands.
3. Acronym is 16 character short mnemonic, single command action/noun. This will eventually be supplanted by two separate OASIS action/noun fields.
4. Type: L = logic level, R = relay, and SR = S/C relay. All are via 1553 bus except S/C relay.
5. Most significant bit is 1st bit transmitted and is leftmost bit shown

Table III. Command List (cont'd) (TBD 23)

ID #	Acronym (Note 3)	Command		Type (Note 4)	RT	SA	Format (Note 5)		Prereq ID #	Reference Section
		S/S	Description				Data 1	Data 2		
21	FDDI_OFF	FD		R		1				
22	HR_PORTA_SEL	FD		R		1				
23	HR_PORTB_SEL	FD		R		1				
24	FIFO_A_RESET	FI		L		1				
25	FIFO_BLK1_ON	FI		R		1				
26	FIFO_BLK2_ON	FI		R		1				
27	FIFO_BLK3_ON	FI		R		1				
28	FIFO_BLK4_ON	FI		R		1				
29	FIFO_OFF	FI		R		1				
30	FR _AON_BOFF	FR		R		1				
31	FR _BON_AOFF	FR		R		1				
32	FR _OFF	FR		R		1				
33	FR_A_RST_B0	FR		L		1				
34	FR_A_RST_B1	FR		L		1				
35	FR_A_SELFTST	FR		L		1				
36	FR_B_RST_B0	FR		L		1				
37	FR_B_RST_B1	FR		L		1				
38	FR_B_SELFTST	FR		L		1				
39	DRVON_ULOFF	MC		R		1				
40	ENABL_FAILSAF	MC		SR		1				

Notes:

RT Remote terminal
SA Subaddress
S/S Subsystem 2–alpha code defined in Table II
1. No entry indicates non–applicable or a "don't care" choice.
2. Table count is 130 commands.
3. Acronym is 16 character short mnemonic, single command action/noun. This will eventually be supplanted by two separate OASIS action/noun fields.
4. Type: L = logic level, R = relay, and SR = S/C relay. All are via 1553 bus except S/C relay.
5. Most significant bit is 1st bit transmitted and is leftmost bit shown

Table III. Command List (cont'd) (TBD 23)

ID #	Acronym (Note 3)	Command		Type (Note 4)	RT	SA	Format (Note 5)		Prereq ID #	Reference Section
		S/S	Description				Data 1	Data 2		
41	FS_PRI_SEL	MC		R		1				
42	FS_RDT_SEL	MC		R		1				
43	FS_SWS_OPEN	MC		R		1				
44	FS_SW_CLOSE	MC		R		1				
45	MC_ALL_OFF	MC		R		1				
46	NAD_FS_FIRE	MC		R		1				
47	NAD_UL_SOL_ON	MC		L		1				
48	SDD_A_DRV_SEL	MC		R		1				
49	SDD_B_DRV_SEL	MC		R		1				
50	SDD_FS_CKT_ON	MC		R		1				
51	SDD_FS_SOL_ON	MC		L		1				
52	SDD_UL_SOL_ON	MC		L		1				
53	SVD_FS_FIRE	MC		R		1				
54	SVD_UL_SOL_ON	MC		L		1				
55	UL_AON_BOFF	MC		R		1				
56	UL_BON_AOFF	MC		R		1				
57	LWPC_AONBOFF	PC		R		1				
58	LWPC_BONAOFF	PC		R		1				
59	LWPC_OFF	PC		R		1				
60	PCA_CAL_ONOFF	PC		L		1				

Notes:

RT Remote terminal
SA Subaddress
S/S Subsystem 2–alpha code defined in Table II
1. No entry indicates non–applicable or a "don't care" choice.
2. Table count is 130 commands.
3. Acronym is 16 character short mnemonic, single command action/noun. This will eventually be supplanted by two separate OASIS action/noun fields.
4. Type: L = logic level, R = relay, and SR = S/C relay. All are via 1553 bus except S/C relay.
5. Most significant bit is 1st bit transmitted and is leftmost bit shown

Table III. Command List (cont'd) (TBD 23)

ID #	Acronym (Note 3)	Command		Type (Note 4)	RT	SA	Format (Note 5)		Prereq ID #	Reference Section
		S/S	Description				Data 1	Data 2		
61	PCB_CAL_ONOFF	PC		L		1				
62	PS1PS2_OFF_A	PS		SR		1				
63	PS1PS2_OFF_B	PS		SR		1				
64	PS1PS2_SD_DISABL	PS		SR		1				
65	PS1PS2_SD_ENABL	PS		SR		1				
66	PS1_ON	PS		SR		1				
67	PS1_PS2_ON	PS		SR		1				
68	PS2_ON	PS		SR		1				
69	SRVHTRA_ENABL	PS		SR		1				
70	SRVHTRB_ENABL	PS		SR		1				
71	SRVHTRS_DISABL	PS		SR		1				
72	LWPVA_CALONOF	PV		L		1				
73	LWPVB_CALONOF	PV		L		1				
74	LWPV_AONBOFF	PV		R		1				
75	LWPV_BONAOFF	PV		R		1				
76	LWPV_OFF	PV		R		1				
77	NIRA_CALONOFF	PV		L		1				
78	NIRB_CALONOFF	PV		L		1				
79	NIR_AON_BOFF	PV		R		1				
80	NIR_BON_AOFF	PV		R		1				

Notes:

RT Remote terminal
SA Subaddress
S/S Subsystem 2–alpha code defined in Table II
1. No entry indicates non–applicable or a "don't care" choice.
2. Table count is 130 commands.
3. Acronym is 16 character short mnemonic, single command action/noun. This will eventually be supplanted by two separate OASIS action/noun fields.
4. Type: L = logic level, R = relay, and SR = S/C relay. All are via 1553 bus except S/C relay.
5. Most significant bit is 1st bit transmitted and is leftmost bit shown

Table III. Command List (cont'd) (TBD 23)

ID #	Acronym (Note 3)	Command		Type (Note 4)	RT	SA	Format (Note 5)		Prereq ID #	Reference Section
		S/S	Description				Data 1	Data 2		
81	NIR_OFF	PV		R		1				
82	PVA_ROMRAM_SEL	PV		L		1				
83	PVB_ROMRAM_SEL	PV		L		1				
84	PV_CAL_DISABL	PV		R		1				
85	PV_CAL_ENABL	PV		R		1				
86	SMIRA_CALONOF	PV		L		1				
87	SMIRB_CALONOF	PV		L		1				
88	SMIR_AONBOFF	PV		R		1				
89	SMIR_BONAOFF	PV		R		1				
90	SMIR_OFF	PV		R		1				
91	VISA_CALONOFF	PV		L		1				
92	VISB_CALONOFF	PV		L		1				
93	VIS_AON_BOFF	PV		R		1				
94	VIS_BON_AOFF	PV		R		1				
95	VIS_OFF	PV		R		1				
96	SCAN_A_OFF	SA		R		1				
97	SCAN_A_ON	SA		R		1				
98	SCAN_B_OFF	SA		R		1				
99	SCAN_B_ON	SA		R		1				
100	SCAN_HI_GAIN	SA		R		1				

Notes:

RT Remote terminal
SA Subaddress
S/S Subsystem 2–alpha code defined in Table II
1. No entry indicates non–applicable or a "don't care" choice.
2. Table count is 130 commands.
3. Acronym is 16 character short mnemonic, single command action/noun. This will eventually be supplanted by two separate OASIS action/noun fields.
4. Type: L = logic level, R = relay, and SR = S/C relay. All are via 1553 bus except S/C relay.
5. Most significant bit is 1st bit transmitted and is leftmost bit shown

Table III. Command List (cont'd) (TBD 23)

ID #	Acronym (Note 3)	Command		Type (Note 4)	RT	SA	Format (Note 5)		Prereq ID #	Reference Section
		S/S	Description				Data 1	Data 2		
101	SCAN_LO_GAIN	SA		R		1				
102	CFPA_SET_T1	TC		R		1				
103	CFPA_SET_T2	TC		R		1				
104	CFPA_SET_T3	TC		R		1				
105	CS_OGCTL_OFF	TC		R		1				
106	CS_OGCTL_ON	TC		R		1				
107	CS_TEMP_OFF	TC		R		1				
108	CS_TEMP_ON	TC		R		1				
109	IS_OGCTL_OFF	TC		R		1				
110	IS_OGCTL_ON	TC		R		1				
111	IS_TEMP_OFF	TC		R		1				
112	IS_TEMP_ON	TC		R		1				
113	LWIR_HTR_OFF	TC		R		1				
114	LWIR_HTR_ON	TC		R		1				
115	LWIR_TEMPOFF	TC		R		1				
116	LWIR_TEMPON	TC		R		1				
117	OS_OGCTL_OFF	TC		R		1				
118	OS_OGCTL_ON	TC		R		1				
119	OS_TEMP_OFF	TC		R		1				
120	OS_TEMP_ON	TC		R		1				

Notes:

RT Remote terminal
SA Subaddress
S/S Subsystem 2–alpha code defined in Table II
1. No entry indicates non–applicable or a "don't care" choice.
2. Table count is 130 commands.
3. Acronym is 16 character short mnemonic, single command action/noun. This will eventually be supplanted by two separate OASIS action/noun fields.
4. Type: L = logic level, R = relay, and SR = S/C relay. All are via 1553 bus except S/C relay.
5. Most significant bit is 1st bit transmitted and is leftmost bit shown

Table III. Command List (cont'd) (TBD 23)

ID #	Acronym (Note3)	Command		Type (Note 4)	RT	SA	Format (Note 5)		Prereq ID #	Reference Section
		S/S	Description				Data 1	Data 2		
121	SMIR_HTR_OFF	TC		R		1				
122	SMIR_HTR_ON	TC		R		1				
123	SMIR_TEMPOFF	TC		R		1				
124	SMIR_TEMPON	TC		R		1				
125	TG_AON_BOFF	TG		R		1				
126	TG_BON_AOFF	TG		R		1				
127	TG_OFF	TG		R		1				
128	TMG_A_RESET	TG		L		1				
129	TMG_B_RESET	TG		L		1				
130	SET_SAFE_MODE	CP				7				
Higher level commands are (TBD 24)										

Notes:

RT Remote terminal
SA Subaddress
S/S Subsystem 2-alpha code defined in Table II
1. No entry indicates non-applicable or a "don't care" choice.
2. Table count is 130 commands.
3. Acronym is 16 character short mnemonic, single command action/noun. This will eventually be supplanted by two separate OASIS action/noun fields.
4. Type: L = logic level, R = relay, and SR = S/C relay. All are via 1553 bus except S/C relay.
5. Most significant bit is 1st bit transmitted and is leftmost bit shown

5.1 (TBD 25) [Command Function]

The **(TBD 25)**[command] schematic is shown in Figure 5–1.

(TBD 26)

Figure 5–1. (TBD 25) [Command] Schematic

Size	Code Ident No.		
A	49671	20008847	Sheet 34

6 TELEMETRY

The MODIS telemetry is listed in Table V and discussed in the following sections.

Two OASIS 16 character fields are used to define the telemetry acronyms per the mnemonic conventions defined in the "EOS–AM Database and Test Procedure Practices, Standards, and Conventions." The first three characters of the external element field denote the EOS subsystem with the remaining 13 characters reserved. "MOD" are the three characters that denote MODIS. The second OASIS 16 character field defines the item name as indicated in Table IV. This item name structure is used in the following telemetry tables.

Table IV. Telemetry Acronym Structure

- 16 Characters: TT_NNNNNNNNNNNNN
- Type(2 characters),_(1 character),Name(13 characters)
- Type (TT)
  - 1st T is sample type:
    - I – Current
    - V– Voltage
    - T– Temperature
    - B– Bi–level Status
    - P– Power
    - C– Configuration Information
    - S– Status Information
    - D– Memory or Dump Data
  - 2nd T is source:
    - A– Active Analog
    - D– Pseudo or Derived Data
    - R– Real or Raw Data
    - S– Flight Software Generated Data
    - P– Passive Analog

N's are limited to alphanumeric characters and the underscore.

Table V. Telemetry List (TBD 27)

Acronym (Note 3)	Telemetry Point		Type (Note 4)	RT	SA	Major Frame		Minor Frame		T_{0Mf} ΔT	Reference Section
	S/S	Description				1st Mfid	# mfs	1st Bit	# Bits		
TP_AOP_BY_RC	AO		SP				8		8		
TP_AO_DICH_MNT	AO		P				1		8		
TP_AO_LWIR_OBJ	AO		P				1		8		
TP_AO_NIR_OBJ	AO		P				1		8		
TP_AO_OPP_DICH	AO		P				1		8		
TP_AO_SMIR_OBJ	AO		P				1		8		
TP_AO_VIS_OBJ	AO		P				1		8		
IR_BB_HTRA_CURR	BB		A				1		8		
IR_BB_HTRB_CURR	BB		A				1		8		
TP_BB_TEMP01	BB		P				64		12		
TP_BB_TEMP02	BB		P				64		12		
TP_BB_TEMP03	BB		P				64		12		
TP_BB_TEMP04	BB		P				64		12		
TP_BB_TEMP05	BB		P				64		12		
TP_BB_TEMP06	BB		P				64		12		
TP_BB_TEMP07	BB		P				64		12		
TP_BB_TEMP08	BB		P				64		12		
TP_BB_TEMP09	BB		P				64		12		
TP_BB_TEMP10	BB		P				64		12		
TP_BB_TEMP11	BB		P				64		12		

Notes:

1st bit	1st bit transmitted, most significant bit, leftmost bit
Mf	Major frame
mf	Minor frame
Mfid	Major frame identifier
mfid	Minor frame identifier
RT	Remote terminal
SA	Subaddress
S/S	Subsystem 2–alpha code defined in Table II
T_{0Mf} ΔT	Delta time from major frame start (T_0)

1. No entry indicates non–applicable or a "don't care" choice.
2. Table count is 348 signals.
3. Acronym is 2nd 16–character field of OASIS Description. First 16–character field (not shown) contains External Element, which for MODIS is "MOD_." Leading 2 characters define functional signal: CD = configuration derived, CR = configuration raw, IR = current raw, TA = temperature active, TP = temperature passive, and VR = voltage raw per Type/Source codes. Since T indicates temperature, temperature is not part of Description structure. Also see Table IV.
4. Type: A = active analog, B = passive bi–level, D = digital value, P = passive analog, SB = S/C passive bi–level and SP = S/C passive analog.

Table V. Telemetry List (cont'd) (TBD 27)

Acronym (Note 3)	Telemetry Point		Type (Note 4)	RT	SA	Major Frame		Minor Frame		T_{0Mf} ΔT	Reference Section
	S/S	Description				1st Mfid	# mfs	1st Bit	# Bits		
TP_BB_TEMP12	BB		P				64		12		
CR_BB_A_ON	CE		B				8		1		
CR_BB_B_ON	CE		B				8		1		
CR_CE_A_ON	CE		B				8		1		
CR_CE_B_ON	CE		B				8		1		
CR_SDSM_A_ON	CE		B				8		1		
CR_SDSM_B_ON	CE		B				8		1		
CR_SR_A_ON	CE		B				8		1		
CR_SR_B_ON	CE		B				8		1		
TA_LWIR_CFPA	CF		A				64		12		
TA_SMIR_CFPA	CF		A				64		12		
CR_CP_A_ON	CP		SB				8		1		
CR_CP_A_PWR_ON	CP		B				8		1		
CR_CP_B_ON_	CP		SB				8		1		
CR_CP_B_PWR_ON	CP		B				8		1		
TP_CP_A_1553	CP		P				1		8		
TP_CP_B_1553	CP		P				1		8		
CD_SVD_AT_OUTGAS	DR		B				8		1		
CR_NAD_1_LATCHED	DR		SB				8		1		
CR_NAD_2_LATCHED	DR		SB				8		1		

Notes:

1st bit	1st bit transmitted, most significant bit, leftmost bit
Mf	Major frame
mf	Minor frame
Mfid	Major frame identifier
mfid	Minor frame identifier
RT	Remote terminal
SA	Subaddress
S/S	Subsystem 2–alpha code defined in Table II
T_{0Mf} ΔT	Delta time from major frame start (T_0)

1. No entry indicates non–applicable or a "don't care" choice.
2. Table count is 348 signals.
3. Acronym is 2nd 16–character field of OASIS Description. First 16–character field (not shown) contains External Element, which for MODIS is "MOD_." Leading 2 characters define functional signal: CD = configuration derived, CR = configuration raw, IR = current raw, TA = temperature active, TP = temperature passive, and VR = voltage raw per Type/Source codes. Since T indicates temperature, temperature is not part of Description structure. Also see Table IV.
4. Type: A = active analog, B = passive bi–level, D = digital value, P = passive analog, SB = S/C passive bi–level and SP = S/C passive analog.

Table V. Telemetry List (cont'd) (TBD 27)

Acronym (Note 3)	Telemetry Point		Type (Note 4)	RT	SA	Major Frame		Minor Frame		T_{0Mf} ΔT	Reference Section
	S/S	Description				1st Mfid	# mfs	1st Bit	# Bits		
CR_NAD_CLOSED	DR		B				8		1		
CR_NAD_OPEN	DR		B				8		1		
CR_SDD_LATCHED	DR		SB				8		1		
CR_SD_DR_CLOSED	DR		B				8		1		
CR_SD_DR_OPEN	DR		B				8		1		
CR_SD_SCN_CLOSED	DR		B				8		1		
CR_SD_SCN_OPEN	DR		B				8		1		
CR_SVD_1_LATCHED	DR		SB				8		1		
CR_SVD_2_LATCHED	DR		SB				8		1		
CR_SVD_CLOSED	DR		B				8		1		
CR_SVD_OPEN	DR		B				8		1		
TP_NAD	DR		P				1		8		
TP_SDD	DR		P				1		8		
TP_SDD_MTR	DR		P				1		8		
TP_SDD_SCRN	DR		P				1		8		
TP_SVD	DR		P				1		8		
TP_SVD_ACT	DR		P				1		8		
CR_FD_A_MODE	FD		B				8		1		
CR_FD_A_ON	FD		B				8		1		
CR_FD_A_PORT_A	FD		B				8		1		

Notes:

1st bit	1st bit transmitted, most significant bit, leftmost bit
Mf	Major frame
mf	Minor frame
Mfid	Major frame identifier
mfid	Minor frame identifier
RT	Remote terminal
SA	Subaddress
S/S	Subsystem 2–alpha code defined in Table II
T_{0Mf} ΔT	Delta time from major frame start (T_0)

1. No entry indicates non–applicable or a "don't care" choice.
2. Table count is 348 signals.
3. Acronym is 2nd 16–character field of OASIS Description. First 16–character field (not shown) contains External Element, which for MODIS is "MOD_." Leading 2 characters define functional signal: CD = configuration derived, CR = configuration raw, IR = current raw, TA = temperature active, TP = temperature passive, and VR = voltage raw per Type/Source codes. Since T indicates temperature, temperature is not part of Description structure. Also see Table IV.
4. Type: A = active analog, B = passive bi–level, D = digital value, P = passive analog, SB = S/C passive bi–level and SP = S/C passive analog.

Table V. Telemetry List (cont'd) (TBD 27)

Acronym (Note 3)	Telemetry Point		Type (Note 4)	RT	SA	Major Frame		Minor Frame		T_{0Mf} ΔT	Reference Section
	S/S	Description				1st Mfid	# mfs	1st Bit	# Bits		
CR_FD_A_RESET	FD		B				8		1		
CR_FD_B_MODE	FD		B				8		1		
CR_FD_B_ON	FD		B				8		1		
CR_FD_B_PORT_A	FD		B				8		1		
CR_FD_B_RESET	FD		B				8		1		
CR_FI_BLK1_ON	FI		B				8		1		
CR_FI_BLK1_RESET	FI		B				8		1		
CR_FI_BLK2_ON	FI		B				8		1		
CR_FI_BLK2_RESET	FI		B				8		1		
CR_FI_BLK3_ON	FI		B				8		1		
CR_FI_BLK3_RESET	FI		B				8		1		
CR_FR_A_MODE	FR		B				8		1		
CR_FR_A_ON	FR		B				8		1		
CR_FR_A_RESET	FR		B				8		1		
CR_FR_A_RUNNING	FR		B				8		1		
CR_FR_A_UPLOAD	FR		B				8		1		
CR_FR_B_MODE	FR		B				8		1		
CR_FR_B_ON	FR		B				8		1		
CR_FR_B_RESET	FR		B				8		1		
CR_FR_B_RUNNING	FR		B				8		1		

Notes:

1st bit	1st bit transmitted, most significant bit, leftmost bit
Mf	Major frame
mf	Minor frame
Mfid	Major frame identifier
mfid	Minor frame identifier
RT	Remote terminal
SA	Subaddress
S/S	Subsystem 2–alpha code defined in Table II
T_{0Mf} ΔT	Delta time from major frame start (T_0)

1. No entry indicates non–applicable or a "don't care" choice.
2. Table count is 348 signals.
3. Acronym is 2nd 16–character field of OASIS Description. First 16–character field (not shown) contains External Element, which for MODIS is "MOD_." Leading 2 characters define functional signal: CD = configuration derived, CR = configuration raw, IR = current raw, TA = temperature active, TP = temperature passive, and VR = voltage raw per Type/Source codes. Since T indicates temperature, temperature is not part of Description structure. Also see Table IV.
4. Type: A = active analog, B = passive bi–level, D = digital value, P = passive analog, SB = S/C passive bi–level and SP = S/C passive analog.

Table V. Telemetry List (cont'd) (TBD 27)

Acronym (Note 3)	Telemetry Point		Type (Note 4)	RT	SA	Major Frame		Minor Frame		T_{0Mf} ΔT	Reference Section
	S/S	Description				1st Mfid	# mfs	1st Bit	# Bits		
CR_FR_B_UPLOAD	FR		B				8		1		
TP_FR_A_ENGINE	FR		P				1		8		
TP_FR_B_ENGINE	FR		P				1		8		
CR_ENABL_FAILSAF	MC		SB				8		1		
CR_FS_ENABLED	MC		B				8		1		
CR_FS_SW2_CLSD	MC		B				8		1		
CR_MC_PWR_ON	MC		B				8		1		
CR_NAD_FS_FIRED	MC		B				8		1		
CR_SDD_A_DRV_SEL	MC		B				8		1		
CR_SDD_FS_ENABLE	MC		B				8		1		
CR_SDD_PRI_FS_SEL	MC		B				8		1		
CR_SVD_FS_FIRED	MC		B				8		1		
CR_UNLATCH_A_ON	MC		B				8		1		
CR_UNLATCH_B_ON	MC		B				8		1		
TP_ME_NX_HTSINK	ME		SP				8		8		
TP_ME_PSRADIATOR	ME		SP				8		8		
TP_CALBKHD_NR_SR	MF		P				1		8		
TP_LOW2PT_AOBKHD	MF		P				1		8		
TP_MF_CVR_OP_SR	MF		P				1		8		
TP_MF_KM1	MF		P				1		8		

Notes:

1st bit	1st bit transmitted, most significant bit, leftmost bit
Mf	Major frame
mf	Minor frame
Mfid	Major frame identifier
mfid	Minor frame identifier
RT	Remote terminal
SA	Subaddress
S/S	Subsystem 2–alpha code defined in Table II
T_{0Mf} ΔT	Delta time from major frame start (T_0)

1. No entry indicates non–applicable or a "don't care" choice.
2. Table count is 348 signals.
3. Acronym is 2nd 16–character field of OASIS Description. First 16–character field (not shown) contains External Element, which for MODIS is "MOD_." Leading 2 characters define functional signal: CD = configuration derived, CR = configuration raw, IR = current raw, TA = temperature active, TP = temperature passive, and VR = voltage raw per Type/Source codes. Since T indicates temperature, temperature is not part of Description structure. Also see Table IV.
4. Type: A = active analog, B = passive bi–level, D = digital value, P = passive analog, SB = S/C passive bi–level and SP = S/C passive analog.

Table V. Telemetry List (cont'd) (TBD 27)

Acronym (Note 3)	Telemetry Point		Type (Note 4)	RT	SA	Major Frame		Minor Frame		T_{0Mf} ΔT	Reference Section
	S/S	Description				1st Mfid	# mfs	1st Bit	# Bits		
TP_MF_KM2	MF		P				1		8		
TP_MF_KM3	MF		P				1		8		
TP_MF_NEAR_KM3	MF		SP				8		8		
VR_B32_REG_N12V	PC		A				1		8		
VR_B32_REG_N5V	PC		A				1		8		
VR_B32_REG_P12V	PC		A				1		8		
VR_B32_REG_P5V	PC		A				1		8		
VR_B33_REG_N12V	PC		A				1		8		
VR_B33_REG_N5V	PC		A				1		8		
VR_B33_REG_P12V	PC		A				1		8		
VR_B33_REG_P5V	PC		A				1		8		
VR_B34_REG_N12V	PC		A				1		8		
VR_B34_REG_N5V	PC		A				1		8		
VR_B34_REG_P12V	PC		A				1		8		
VR_B34_REG_P5V	PC		A				1		8		
VR_B35_REG_N12V	PC		A				1		8		
VR_B35_REG_N5V	PC		A				1		8		
VR_B35_REG_P12V	PC		A				1		8		
VR_B35_REG_P5V	PC		A				1		8		
VR_B36_REG_N12V	PC		A				1		8		

Notes:

1st bit	1st bit transmitted, most significant bit, leftmost bit
Mf	Major frame
mf	Minor frame
Mfid	Major frame identifier
mfid	Minor frame identifier
RT	Remote terminal
SA	Subaddress
S/S	Subsystem 2–alpha code defined in Table II
T_{0Mf} ΔT	Delta time from major frame start (T_0)

1. No entry indicates non–applicable or a "don't care" choice.
2. Table count is 348 signals.
3. Acronym is 2nd 16–character field of OASIS Description. First 16–character field (not shown) contains External Element, which for MODIS is "MOD_." Leading 2 characters define functional signal: CD = configuration derived, CR = configuration raw, IR = current raw, TA = temperature active, TP = temperature passive, and VR = voltage raw per Type/Source codes. Since T indicates temperature, temperature is not part of Description structure. Also see Table IV.
4. Type: A = active analog, B = passive bi–level, D = digital value, P = passive analog, SB = S/C passive bi–level and SP = S/C passive analog.

Table V. Telemetry List (cont'd) (TBD 27)

Acronym (Note 3)	Telemetry Point		Type (Note 4)	RT	SA	Major Frame		Minor Frame		T_{0Mf} ΔT	Reference Section
	S/S	Description				1st Mfid	# mfs	1st Bit	# Bits		
VR_B36_REG_N5V	PC		A				1		8		
VR_B36_REG_P12V	PC		A				1		8		
VR_B36_REG_P5V	PC		A				1		8		
CR_PS1_ON	PS		SB				8		1		
CR_PS1_SD_ENABL	PS		SB				8		1		
CR_PS2_ON	PS		SB				8		1		
CR_PS2_SD_ENABL	PS		SB				8		1		
CR_SRVHTRA_ENABL	PS		SB				8		1		
CR_SRVHTRB_ENABL	PS		SB				8		1		
IR_PS1_INPUT_CUR	PS		A				1		8		
IR_PS2_INPUT_CUR	PS		A				1		8		
TP_PS1_CVTR_SW	PS		P				1		8		
TP_PS1_DIODE_OUT	PS		P				1		8		
TP_PS1_DWNREG_SW	PS		P				1		8		
TP_PS2_CVTR_SW	PS		P				1		8		
TP_PS2_DIODE_OUT	PS		P				1		8		
TP_PS2_DWNREG_SW	PS		P				1		8		
VR_PS1_N15V_A1ME	PS		A				1		8		
VR_PS1_N15V_A2AF	PS		A				1		8		
VR_PS1_N15V_A3AS	PS		A				1		8		

Notes:

1st bit	1st bit transmitted, most significant bit, leftmost bit
Mf	Major frame
mf	Minor frame
Mfid	Major frame identifier
mfid	Minor frame identifier
RT	Remote terminal
SA	Subaddress
S/S	Subsystem 2–alpha code defined in Table II
T_{0Mf} ΔT	Delta time from major frame start (T_0)

1. No entry indicates non–applicable or a "don't care" choice.
2. Table count is 348 signals.
3. Acronym is 2nd 16–character field of OASIS Description. First 16–character field (not shown) contains External Element, which for MODIS is "MOD_." Leading 2 characters define functional signal: CD = configuration derived, CR = configuration raw, IR = current raw, TA = temperature active, TP = temperature passive, and VR = voltage raw per Type/Source codes. Since T indicates temperature, temperature is not part of Description structure. Also see Table IV.
4. Type: A = active analog, B = passive bi–level, D = digital value, P = passive analog, SB = S/C passive bi–level and SP = S/C passive analog.

Table V. Telemetry List (cont'd) (TBD 27)

Acronym (Note 3)	Telemetry Point		Type (Note 4)	RT	SA	Major Frame		Minor Frame		T_{0Mf} ΔT	Reference Section
	S/S	Description				1st Mfid	# mfs	1st Bit	# Bits		
VR_PS1_N30V_A1ME	PS		A				1		8		
VR_PS1_N8V_A2	PS		A				1		8		
VR_PS1_P15V_A1ME	PS		A				1		8		
VR_PS1_P15V_A2AF	PS		A				1		8		
VR_PS1_P15V_A3AS	PS		A				1		8		
VR_PS1_P30V_A1	PS		A				1		8		
VR_PS1_P5.6V_D1	PS		A				1		8		
VR_PS1_P88V_A1ME	PS		A				1		8		
VR_PS1_P8V_A2	PS		A				1		8		
VR_PS1_P8V_N1ME	PS		A				1		8		
VR_PS2_N15V_A1ME	PS		A				1		8		
VR_PS2_N15V_A2AF	PS		A				1		8		
VR_PS2_N15V_A3AS	PS		A				1		8		
VR_PS2_N30V_A1ME	PS		A				1		8		
VR_PS2_N8V_A2	PS		A				1		8		
VR_PS2_P15V_A1ME	PS		A				1		8		
VR_PS2_P15V_A2AF	PS		A				1		8		
VR_PS2_P15V_A3AS	PS		A				1		8		
VR_PS2_P30V_A1	PS		A				1		8		
VR_PS2_P5.6V_D1	PS		A				1		8		

Notes:

1st bit	1st bit transmitted, most significant bit, leftmost bit
Mf	Major frame
mf	Minor frame
Mfid	Major frame identifier
mfid	Minor frame identifier
RT	Remote terminal
SA	Subaddress
S/S	Subsystem 2–alpha code defined in Table II
T_{0Mf} ΔT	Delta time from major frame start (T_0)

1. No entry indicates non–applicable or a "don't care" choice.
2. Table count is 348 signals.
3. Acronym is 2nd 16–character field of OASIS Description. First 16–character field (not shown) contains External Element, which for MODIS is "MOD_." Leading 2 characters define functional signal: CD = configuration derived, CR = configuration raw, IR = current raw, TA = temperature active, TP = temperature passive, and VR = voltage raw per Type/Source codes. Since T indicates temperature, temperature is not part of Description structure. Also see Table IV.
4. Type: A = active analog, B = passive bi–level, D = digital value, P = passive analog, SB = S/C passive bi–level and SP = S/C passive analog.

Table V. Telemetry List (cont'd) (TBD 27)

Acronym (Note 3)	Telemetry Point		Type (Note 4)	RT	SA	Major Frame		Minor Frame		T_{0Mf} ΔT	Reference Section
	S/S	Description				1st Mfid	# mfs	1st Bit	# Bits		
VR_PS2_P88V_A1ME	PS		A				1		8		
VR_PS2_P8V_A2	PS		A				1		8		
VR_PS2_P8V_N1ME	PS		A				1		8		
CR_LWPV_A_CAL_ON	PV		B				8		1		
CR_LWPV_B_CAL_ON	PV		B				8		1		
CR_LWPV__A_ON	PV		B				8		1		
CR_LWPV__B_ON	PV		B				8		1		
CR_NIR_A_CAL_ON	PV		B				8		1		
CR_NIR_A_ON	PV		B				8		1		
CR_NIR_B_CAL_ON	PV		B				8		1		
CR_NIR_B_ON	PV		B				8		1		
CR_PV_A_ROM_SEL	PV		B				8		1		
CR_PV_B_ROM_SEL	PV		B				8		1		
CR_PV_CAL_ENABL	PV		B				8		1		
CR_SMIR_A_CAL_ON	PV		B				8		1		
CR_SMIR_A_ON	PV		B				8		1		
CR_SMIR_B_CAL_ON	PV		B				8		1		
CR_SMIR_B_ON	PV		B				8		1		
CR_VIS_A_CAL_ON	PV		B				8		1		
CR_VIS_A_ON	PV		B				8		1		

Notes:

1st bit	1st bit transmitted, most significant bit, leftmost bit
Mf	Major frame
mf	Minor frame
Mfid	Major frame identifier
mfid	Minor frame identifier
RT	Remote terminal
SA	Subaddress
S/S	Subsystem 2–alpha code defined in Table II
T_{0Mf} ΔT	Delta time from major frame start (T_0)

1. No entry indicates non–applicable or a "don't care" choice.
2. Table count is 348 signals.
3. Acronym is 2nd 16–character field of OASIS Description. First 16–character field (not shown) contains External Element, which for MODIS is "MOD_." Leading 2 characters define functional signal: CD = configuration derived, CR = configuration raw, IR = current raw, TA = temperature active, TP = temperature passive, and VR = voltage raw per Type/Source codes. Since T indicates temperature, temperature is not part of Description structure. Also see Table IV.
4. Type: A = active analog, B = passive bi–level, D = digital value, P = passive analog, SB = S/C passive bi–level and SP = S/C passive analog.

Table V. Telemetry List (cont'd) (TBD 27)

Acronym (Note 3)	Telemetry Point		Type (Note 4)	RT	SA	Major Frame		Minor Frame		T_{0Mf} ΔT	Reference Section
	S/S	Description				1st Mfid	# mfs	1st Bit	# Bits		
CR_VIS_B_CAL_ON	PV		B				8		1		
CR_VIS_B_ON	PV		B				8		1		
TA_LWA_04_ACECB	PV		A				1		8		
TA_LWB_10_ACECB	PV		A				1		8		
TA_NIRA_02_ACECB	PV		A				1		8		
TA_NIRA_03_ACEACE	PV		A				1		8		
TA_NIRB_08_ACECB	PV		A				1		8		
TA_NIRB_09_ACEACE	PV		A				1		8		
TA_SMA_05_TLMCB	PV		A				1		8		
TA_SMA_06_ACEACE	PV		A				1		8		
TA_SMB_11_SPCB	PV		A				1		8		
TA_SMB_12_ACEACE	PV		A				1		8		
TA_VISA_01_ACECB	PV		A				1		8		
TA_VISB_07_ACECB	PV		A				1		8		
TP_SAM_RADIATOR	PV		SP				8		8		
VR_LWA_04_RN11V	PV		A				1		8		
VR_LWA_04_RN5V	PV		A				1		8		
VR_LWA_04_RP11V	PV		A				1		8		
VR_LWA_04_RP5V	PV		A				1		8		
VR_LWB_10_RN11V	PV		A				1		8		

Notes:

1st bit	1st bit transmitted, most significant bit, leftmost bit
Mf	Major frame
mf	Minor frame
Mfid	Major frame identifier
mfid	Minor frame identifier
RT	Remote terminal
SA	Subaddress
S/S	Subsystem 2–alpha code defined in Table II
T_{0Mf} ΔT	Delta time from major frame start (T_0)

1. No entry indicates non–applicable or a "don't care" choice.
2. Table count is 348 signals.
3. Acronym is 2nd 16–character field of OASIS Description. First 16–character field (not shown) contains External Element, which for MODIS is "MOD_." Leading 2 characters define functional signal: CD = configuration derived, CR = configuration raw, IR = current raw, TA = temperature active, TP = temperature passive, and VR = voltage raw per Type/Source codes. Since T indicates temperature, temperature is not part of Description structure. Also see Table IV.
4. Type: A = active analog, B = passive bi–level, D = digital value, P = passive analog, SB = S/C passive bi–level and SP = S/C passive analog.

Table V. Telemetry List (cont'd) (TBD 27)

Acronym (Note 3)	Telemetry Point		Type (Note 4)	RT	SA	Major Frame		Minor Frame		T_{0Mf} ΔT	Reference Section
	S/S	Description				1st Mfid	# mfs	1st Bit	# Bits		
VR_LWB_10_RN5V	PV		A				1		8		
VR_LWB_10_RP11V	PV		A				1		8		
VR_LWB_10_RP5V	PV		A				1		8		
VR_NIRA_02_RN11V	PV		A				1		8		
VR_NIRA_02_RN5V	PV		A				1		8		
VR_NIRA_02_RP11V	PV		A				1		8		
VR_NIRA_02_RP5V	PV		A				1		8		
VR_NIRA_03_P5VD1	PV		A				1		8		
VR_NIRA_03_RN11V	PV		A				1		8		
VR_NIRA_03_RN5V	PV		A				1		8		
VR_NIRA_03_RP11V	PV		A				1		8		
VR_NIRA_03_RP5V	PV		A				1		8		
VR_NIRB_08_RN11V	PV		A				1		8		
VR_NIRB_08_RN5V	PV		A				1		8		
VR_NIRB_08_RP11V	PV		A				1		8		
VR_NIRB_08_RP5V	PV		A				1		8		
VR_NIRB_09_P5VD1	PV		A				1		8		
VR_NIRB_09_RN11V	PV		A				1		8		
VR_NIRB_09_RN5V	PV		A				1		8		
VR_NIRB_09_RP11V	PV		A				1		8		

Notes:

1st bit	1st bit transmitted, most significant bit, leftmost bit
Mf	Major frame
mf	Minor frame
Mfid	Major frame identifier
mfid	Minor frame identifier
RT	Remote terminal
SA	Subaddress
S/S	Subsystem 2–alpha code defined in Table II
T_{0Mf} ΔT	Delta time from major frame start (T_0)

1. No entry indicates non–applicable or a "don't care" choice.
2. Table count is 348 signals.
3. Acronym is 2nd 16–character field of OASIS Description. First 16–character field (not shown) contains External Element, which for MODIS is "MOD_." Leading 2 characters define functional signal: CD = configuration derived, CR = configuration raw, IR = current raw, TA = temperature active, TP = temperature passive, and VR = voltage raw per Type/Source codes. Since T indicates temperature, temperature is not part of Description structure. Also see Table IV.
4. Type: A = active analog, B = passive bi–level, D = digital value, P = passive analog, SB = S/C passive bi–level and SP = S/C passive analog.

Table V. Telemetry List (cont'd) (TBD 27)

Acronym (Note 3)	Telemetry Point		Type (Note 4)	RT	SA	Major Frame		Minor Frame		T_{0Mf} ΔT	Reference Section
	S/S	Description				1st Mfid	# mfs	1st Bit	# Bits		
VR_NIRB_09_RP5V	PV		A				1		8		
VR_SMA_05_RN11V	PV		A				1		8		
VR_SMA_05_RN5V	PV		A				1		8		
VR_SMA_05_RP11V	PV		A				1		8		
VR_SMA_05_RP5V	PV		A				1		8		
VR_SMA_06_P5VD1	PV		A				1		8		
VR_SMA_06_RN11V	PV		A				1		8		
VR_SMA_06_RN5V	PV		A				1		8		
VR_SMA_06_RP11V	PV		A				1		8		
VR_SMA_06_RP5V	PV		A				1		8		
VR_SMB_11_RN11V	PV		A				1		8		
VR_SMB_11_RN5V	PV		A				1		8		
VR_SMB_11_RP11V	PV		A				1		8		
VR_SMB_11_RP5V	PV		A				1		8		
VR_SMB_12_P5VD1	PV		A				1		8		
VR_SMB_12_RN11V	PV		A				1		8		
VR_SMB_12_RN5V	PV		A				1		8		
VR_SMB_12_RP11V	PV		A				1		8		
VR_SMB_12_RP5V	PV		A				1		8		
VR_VISA_01_RN11V	PV		A				1		8		

Notes:

1st bit	1st bit transmitted, most significant bit, leftmost bit
Mf	Major frame
mf	Minor frame
Mfid	Major frame identifier
mfid	Minor frame identifier
RT	Remote terminal
SA	Subaddress
S/S	Subsystem 2–alpha code defined in Table II
T_{0Mf} ΔT	Delta time from major frame start (T_0)

1. No entry indicates non–applicable or a "don't care" choice.
2. Table count is 348 signals.
3. Acronym is 2nd 16–character field of OASIS Description. First 16–character field (not shown) contains External Element, which for MODIS is "MOD_." Leading 2 characters define functional signal: CD = configuration derived, CR = configuration raw, IR = current raw, TA = temperature active, TP = temperature passive, and VR = voltage raw per Type/Source codes. Since T indicates temperature, temperature is not part of Description structure. Also see Table IV.
4. Type: A = active analog, B = passive bi–level, D = digital value, P = passive analog, SB = S/C passive bi–level and SP = S/C passive analog.

Table V. Telemetry List (cont'd) (TBD 27)

Acronym (Note 3)	Telemetry Point		Type (Note 4)	RT	SA	Major Frame		Minor Frame		T_{0Mf} ΔT	Reference Section
	S/S	Description				1st Mfid	# mfs	1st Bit	# Bits		
VR_VISA_01_RN5V	PV		A				1		8		
VR_VISA_01_RP11V	PV		A				1		8		
VR_VISA_01_RP5V	PV		A				1		8		
VR_VISB_07_RN11V	PV		A				1		8		
VR_VISB_07_RN5V	PV		A				1		8		
VR_VISB_07_RP11V	PV		A				1		8		
VR_VISB_07_RP5V	PV		A				1		8		
TA_RC_CLDSTG	RC		A				1		12		
TA_RC_CLDSTG_0G	RC		A				1		12		
TA_RC_INTSTG	RC		A				1		12		
TA_RC_INTSTG_OG	RC		P				1		12		
TA_RC_OUTSTG_FIN	RC		A				1		12		
TA_RC_OUTSTG_OG	RC		A				1		12		
TP_MF_OB_BLKHD	MF		SP				8		8		
TP_MF_YZ_CALBKHD	MF		P				1		8		
TP_Z_BKHD_NR_BB	MF		P				1		8		
CR_LWPC_A_CAL_ON	PC		B				8		1		
CR_LWPC_A_PWR_ON	PC		B				8		1		
CR_LWPC_B_CAL_ON	PC		B				8		1		
CR_LWPC_B_PWR_ON	PC		B				8		1		

Notes:

1st bit	1st bit transmitted, most significant bit, leftmost bit
Mf	Major frame
mf	Minor frame
Mfid	Major frame identifier
mfid	Minor frame identifier
RT	Remote terminal
SA	Subaddress
S/S	Subsystem 2–alpha code defined in Table II
T_{0Mf} ΔT	Delta time from major frame start (T_0)

1. No entry indicates non–applicable or a "don't care" choice.
2. Table count is 348 signals.
3. Acronym is 2nd 16–character field of OASIS Description. First 16–character field (not shown) contains External Element, which for MODIS is "MOD_." Leading 2 characters define functional signal: CD = configuration derived, CR = configuration raw, IR = current raw, TA = temperature active, TP = temperature passive, and VR = voltage raw per Type/Source codes. Since T indicates temperature, temperature is not part of Description structure. Also see Table IV.
4. Type: A = active analog, B = passive bi–level, D = digital value, P = passive analog, SB = S/C passive bi–level and SP = S/C passive analog.

Table V. Telemetry List (cont'd) (TBD 27)

Acronym (Note 3)	Telemetry Point		Type (Note 4)	RT	SA	Major Frame		Minor Frame		T_{0Mf} ΔT	Reference Section
	S/S	Description				1st Mfid	# mfs	1st Bit	# Bits		
TA_AF_A_MUX_CKT	PC		A				1		8		
TA_AF_B_MUX_CKT	PC		A				1		8		
TP_FAM_RADIATOR	PC		SP				8		8		
TP_PC_CLAM_MNT	PC		P				1		8		
VR_B31_REG_N12V	PC		A				1		8		
VR_B31_REG_N5V	PC		A				1		8		
VR_B31_REG_P12V	PC		A				1		8		
VR_B31_REG_P5V	PC		A				1		8		
TA_RC_OUTSTG_WH	RC		A				1		12		
TP_RC_CLDSTG_HI	RC		SP				8		8		
TP_RC_CLD_SHLD	RC		P				1		12		
TP_RC_MNT_RING	RC		P				1		12		
TP_SA_MTR_ENCDR	SA		SP				8		8		
TP_SA_MTR_PREC_A	SA		P				1		12		
TP_SA_MTR_PREC_B	SA		P				1		12		
TP_SD_TEMP1	SD		P				1		8		
TP_SD_TEMP2	SD		P				1		8		
CR_SE_A_HI_GAIN	SE		B				8		1		
CR_SE_A_PH_LOCK	SE		B				8		1		
CR_SE_B_HI_GAIN	SE		B				8		1		

Notes:

1st bit	1st bit transmitted, most significant bit, leftmost bit
Mf	Major frame
mf	Minor frame
Mfid	Major frame identifier
mfid	Minor frame identifier
RT	Remote terminal
SA	Subaddress
S/S	Subsystem 2–alpha code defined in Table II
T_{0Mf} ΔT	Delta time from major frame start (T_0)

1. No entry indicates non–applicable or a "don't care" choice.
2. Table count is 348 signals.
3. Acronym is 2nd 16–character field of OASIS Description. First 16–character field (not shown) contains External Element, which for MODIS is "MOD_." Leading 2 characters define functional signal: CD = configuration derived, CR = configuration raw, IR = current raw, TA = temperature active, TP = temperature passive, and VR = voltage raw per Type/Source codes. Since T indicates temperature, temperature is not part of Description structure. Also see Table IV.
4. Type: A = active analog, B = passive bi–level, D = digital value, P = passive analog, SB = S/C passive bi–level and SP = S/C passive analog.

Table V. Telemetry List (cont'd) (TBD 27)

Acronym (Note 3)	Telemetry Point		Type (Note 4)	RT	SA	Major Frame		Minor Frame		T_{0Mf} ΔT	Reference Section
	S/S	Description				1st Mfid	# mfs	1st Bit	# Bits		
CR_SE_B_PH_LOCK	SE		B				8		1		
CR_SE_SCAN_A_ON	SE		B				8		1		
CR_SE_SCAN_B_ON	SE		B				8		1		
PR_SE_MTR_A_PWR	SE		A				1		8		
PR_SE_MTR_B_PWR	SE		A				1		8		
VR_SE_A_NV	SE		A				1		8		
VR_SE_A_PV	SE		A				1		8		
VR_SE_B_NV	SE		A				1		8		
VR_SE_B_PV	SE		A				1		8		
TP_SDSM_GEDET	SM		P				1		8		
TP_SDSM_MOTOR	SM		P				1		8		
IR_SR_10WLA_CURR	SR		A				64		8		
IR_SR_10WLB_CURR	SR		A				64		8		
IR_SR_1WLA_CURR	SR		A				64		8		
IR_SR_1WLB_CURR	SR		A				64		8		
TA_SR_IR_SRC_A	SR		A				64		8		
TA_SR_IR_SRC_B	SR		A				64		8		
TA_SR_SIPD_A	SR		A				64		8		
TA_SR_SIPD_B	SR		A				64		8		
TP_SR_2NDMIR_DET	SR		P				64		8		

Notes:

1st bit	1st bit transmitted, most significant bit, leftmost bit
Mf	Major frame
mf	Minor frame
Mfid	Major frame identifier
mfid	Minor frame identifier
RT	Remote terminal
SA	Subaddress
S/S	Subsystem 2–alpha code defined in Table II
T_{0Mf} ΔT	Delta time from major frame start (T_0)

1. No entry indicates non–applicable or a "don't care" choice.
2. Table count is 348 signals.
3. Acronym is 2nd 16–character field of OASIS Description. First 16–character field (not shown) contains External Element, which for MODIS is "MOD_." Leading 2 characters define functional signal: CD = configuration derived, CR = configuration raw, IR = current raw, TA = temperature active, TP = temperature passive, and VR = voltage raw per Type/Source codes. Since T indicates temperature, temperature is not part of Description structure. Also see Table IV.
4. Type: A = active analog, B = passive bi–level, D = digital value, P = passive analog, SB = S/C passive bi–level and SP = S/C passive analog.

Table V. Telemetry List (cont'd) (TBD 27)

Acronym (Note 3)	Telemetry Point		Type (Note 4)	RT	SA	Major Frame		Minor Frame		T_{0Mf} ΔT	Reference Section
	S/S	Description				1st Mfid	# mfs	1st Bit	# Bits		
TP_SR_2NDMIR_SP	SR		P				64		8		
TP_SR_LAMP_RING	SR		P				64		8		
TP_SR_MONO_CHAS	SR		P				64		8		
TP_SR_SNOUT	SR		P				64		8		
VR_SR_EX_NFI_RAD	SR		A				64		8		
VR_SR_EX_WFI_RAD	SR		A				64		8		
VR_SR_SRC_A_RAD	SR		A				64		8		
VR_SR_SRC_B_RAD	SR		A				64		8		
TP_SUNSHADE	SS		P				1		8		
CD_CFPA_T2_SEL	TC		B				8		1		
CR_CFPA_T1_SEL	TC		B				8		1		
CR_CFPA_T3_SEL	TC		B				8		1		
CR_CLDSTG_HTR_ON	TC		B				8		1		
CR_CLDSTG_TLM_ON	TC		B				8		1		
CR_INTSTG_HTR_ON	TC		B				8		1		
CR_INTSTG_TLM_ON	TC		B				8		1		
CR_LWIR_FPHTR_ON	TC		B				8		1		
CR_LWIR_T_TLM_ON	TC		B				8		1		
CR_OUTSTG_HTR_ON	TC		B				8		1		
CR_OUTSTG_TLM_ON	TC		B				8		1		

Notes:

1st bit	1st bit transmitted, most significant bit, leftmost bit
Mf	Major frame
mf	Minor frame
Mfid	Major frame identifier
mfid	Minor frame identifier
RT	Remote terminal
SA	Subaddress
S/S	Subsystem 2–alpha code defined in Table II
T_{0Mf} ΔT	Delta time from major frame start (T_0)

1. No entry indicates non–applicable or a "don't care" choice.
2. Table count is 348 signals.
3. Acronym is 2nd 16–character field of OASIS Description. First 16–character field (not shown) contains External Element, which for MODIS is "MOD_." Leading 2 characters define functional signal: CD = configuration derived, CR = configuration raw, IR = current raw, TA = temperature active, TP = temperature passive, and VR = voltage raw per Type/Source codes. Since T indicates temperature, temperature is not part of Description structure. Also see Table IV.
4. Type: A = active analog, B = passive bi–level, D = digital value, P = passive analog, SB = S/C passive bi–level and SP = S/C passive analog.

Table V. Telemetry List (cont'd) (TBD 27)

Acronym (Note 3)	Telemetry Point		Type (Note 4)	RT	SA	Major Frame		Minor Frame		T_{0Mf} ΔT	Reference Section
	S/S	Description				1st Mfid	# mfs	1st Bit	# Bits		
CR_SMIR_FPHTR_ON	TC		B				8		1		
CR_SMIR_T_TLM_ON	TC		B				8		1		
VR_CLDSTG_CKT_PV	TC		A				1		8		
VR_INTSTG_CKT_PV	TC		A				1		8		
VR_LWIR_CKT_NV	TC		A				1		8		
VR_LWIR_CKT_PV	TC		A				1		8		
VR_LWIR_HTR_PV	TC		A				1		8		
VR_OUTSTG_CKT_PV	TC		A				1		8		
VR_SMIR_CKT_NV	TC		A				1		8		
VR_SMIR_CKT_PV	TC		A				1		8		
VR_SMIR_HTR_PV	TC		A				1		8		
VR_VIS_CKT_NV	TC		A				1		8		
VR_VIS_CKT_PV	TC		A				1		8		
TP_TE_FOLD_MIR	TE		P				1		8		
TP_TE_PRI_MIR	TE		P				1		8		
TP_TE_SECI_MIR	TE		P				1		8		
CR_TG_A_ON	TG		B				8		1		
CR_TG_A_RESET	TG		B				8		1		
CR_TG_B_ON	TG		B				8		1		
CR_TG_B_RESET	TG		B				8		1		

Notes:

1st bit	1st bit transmitted, most significant bit, leftmost bit
Mf	Major frame
mf	Minor frame
Mfid	Major frame identifier
mfid	Minor frame identifier
RT	Remote terminal
SA	Subaddress
S/S	Subsystem 2–alpha code defined in Table II
T_{0Mf} ΔT	Delta time from major frame start (T_0)

1. No entry indicates non–applicable or a "don't care" choice.
2. Table count is 348 signals.
3. Acronym is 2nd 16–character field of OASIS Description. First 16–character field (not shown) contains External Element, which for MODIS is "MOD_." Leading 2 characters define functional signal: CD = configuration derived, CR = configuration raw, IR = current raw, TA = temperature active, TP = temperature passive, and VR = voltage raw per Type/Source codes. Since T indicates temperature, temperature is not part of Description structure. Also see Table IV.
4. Type: A = active analog, B = passive bi–level, D = digital value, P = passive analog, SB = S/C passive bi–level and SP = S/C passive analog.

Table V. Telemetry List (cont'd) (TBD 27)

Acronym (Note 3)	Telemetry Point		Type (Note 4)	RT	SA	Major Frame		Minor Frame		T_{0Mf} ΔT	Reference Section
	S/S	Description				1st Mfid	# mfs	1st Bit	# Bits		
CR_A_AD_DATA_AVL	TM		B				8		1		
CR_A_AD_RNGE_OUT	TM		B				8		1		
CR_B_AD_DATA_AVL	TM		B				8		1		
CR_B_AD_RNGE_OUT	TM		B				8		1		
TP_TM_A_ANLG_CKT	TM		P				1		8		
TP_TM_B_ANLG_CKT	TM		P				1		8		
TA_NIR_WFPA	WF		A				1		12		
TA_VIS_WFPA	WF		A				1		12		
Processor status telemetry, pseudo telemetry, and engineering telemetry are **(TBD 28)**											

Notes:

1st bit	1st bit transmitted, most significant bit, leftmost bit
Mf	Major frame
mf	Minor frame
Mfid	Major frame identifier
mfid	Minor frame identifier
RT	Remote terminal
SA	Subaddress
S/S	Subsystem 2–alpha code defined in Table II
T_{0Mf} ΔT	Delta time from major frame start (T_0)

1. No entry indicates non–applicable or a "don't care" choice.
2. Table count is 348 signals.
3. Acronym is 2nd 16–character field of OASIS Description. First 16–character field (not shown) contains External Element, which for MODIS is "MOD_." Leading 2 characters define functional signal: CD = configuration derived, CR = configuration raw, IR = current raw, TA = temperature active, TP = temperature passive, and VR = voltage raw per Type/Source codes. Since T indicates temperature, temperature is not part of Description structure. Also see Table IV.
4. Type: A = active analog, B = passive bi–level, D = digital value, P = passive analog, SB = S/C passive bi–level and SP = S/C passive analog.

6.1 (TBD 29) [Telemetry Function]

The **(TBD 29)** [telemetry] schematic is shown in Figure 6–1.

(TBD 30)

Figure 6–1. (TBD 29) [Telemetry] Schematic

Size	Code Ident No.		
A	49671	20008847	Sheet 55

7 MICROPROCESSORS

The MODIS contains two instrument microprocessors: 1) Telemetry and Command Processor (CP), and 2) Format Processor (FR). Each consists of two (primary and redundant) Single Board Computers (SBCs) using a GEC–Plessey 16–bit MA31750 with a memory management unit. Both operate at 12 MHz. Memory is in radiation–hardened 32 K x 8 bit Static Random Access Memory (SRAM) chips. The CP has a 48 Mhz clock which is divided down for all MODIS timing.

7.1 Microprocessor Control

(TBD 31)

7.2 Microprocessor Operation

(TBD 31)

7.3 Microprocessor Functional Requirements

(TBD 31)

7.4 Microprocessor Memory Load

(TBD 31)

7.5 Microprocessor Memory Dump

(TBD 31)

7.6 Microprocessor Memory Error Detection

(TBD 31)

8 DATA FORMATS

(TBD 32)

8.1 Command and Telemetry Bus Messages

(TBD 32)

8.1.1 Command and Telemetry Bus Command Messages

(TBD 32)

8.1.2 Command and Telemetry Bus Health and Safety Telemetry Messages

(TBD 32)

8.1.3 Command and Telemetry Bus Housekeeping Telemetry Messages

(TBD 32)

8.2 Science Data Packets

The MODIS science data rate is shown in Table VI.

Table VI. Science Data Rate

	Data Rate (Mbps)	
	2–Orbit Average	Peak
Estimate	6.2	10.8
Basis (%)		
Estimated	0	0
Calculated	100	100
Actual	0	0

8.2.1 Engineering Packets

(TBD 32)

8.2.2 Science Packets

(TBD 32)

8.3 Test Patterns

(TBD 32)

9 CONSTRAINTS

(TBD 33)

9.1 Testing Constraints

(TBD 33)

9.2 Operational Constraints

(TBD 33)

9.3 Environmental Constraints

(TBD 33)

20043116
CAGE No. 49671
26 August 1993

(PRELIMINARY)

EOS-AM Spacecraft

MEASUREMENT OF POLLUTION IN THE TROPOSPHERE (MOPITT)

INSTRUMENT FLIGHT OPERATIONS UNDERSTANDING

Prepared Under:
Contract No. NAS5-32500
NASA Goddard Space Flight Center
Greenbelt, Maryland 20771

Prepared by:
Martin Marietta
Astro-Space
P. O. Box 800
Princeton, New Jersey 08543-0800

REVISION LOG

This log identifies those portions of this document which have been revised since original issue.

Revision	Paragraph Number(s) Affected	Rev. Date	Approval
Draft	All	2 April 1993	N/A
Preliminary	All	26 August 1993	N/A

TABLE OF CONTENTS

SECTION/ PARAGRAPH	TITLE	PAGE
1	INTRODUCTION	1
1.1	Purpose	1
1.2	Scope	1
2	DOCUMENTATION	2
2.1	Applicable Documents	2
2.2	Information Documents	2
3	INSTRUMENT DEFINITION	3
3.1	Basic Description	3
3.2	Instrument Operations	4
3.2.1	Operating Modes	4
3.2.2	Microprocessor Operation	6
3.2.3	Instrument Commands	6
3.2.4	Instrument Telemetry	6
3.2.4.1	Science Data	6
3.2.4.2	Engineering Data	6
3.2.4.3	Housekeeping Data	6
3.2.5	Bus Data Unit	7
3.2.6	Operating Constraints	7
3.2.6.1	Categories of Constraint/Restraints	7
3.2.6.2	MOPITT Operating Constraints	8
3.2.7	Activation	8
4	OPERATIONAL SYSTEM DEFINITION	10
4.1	Spacecraft Bus	10
4.1.1	Command and Telemetry Systems	12
4.1.2	Spacecraft Controls Computer	14
4.1.2.1	Spacecraft Controls Computer Description	14
4.1.2.2	Spacecraft Controls Computer Operation	17
4.1.3	Command and Telemetry Interface Unit	21
4.1.4	Science Formatting Equipment	25
4.1.5	Solid State Recorder	28
4.1.6	Bus Data Unit	35
4.1.7	Initial Spacecraft Operation	35
4.1.8	Spacecraft Maneuver Operations	36
4.1.9	Autonomous Operations	37
4.1.10	Spacecraft Bus Operating Modes	37
4.1.11	Spacecraft Bus - Instrument Operating Modes Relationships	43

TABLE OF CONTENTS (continued)

SECTION/ PARAGRAPH	TITLE	PAGE
4.2	Ground System	45
4.2.1	Space Network	45
4.2.2	FDF	47
4.2.3	NASCOM	48
4.2.4	Science Support Networks	48
4.2.5	Alternate Space/Ground Links	49
4.2.6	EOSDIS	49
4.2.6.1	EDOS	49
4.2.6.2	ECOM	50
4.2.6.3	ECS	51
4.2.6.3.1	FOS	51
4.2.6.3.2	SDPS	54
4.2.6.3.3	CSMS	55
5	FUNCTIONAL RESPONSIBILITY ALLOCATIONS	56
5.1	Planning and Scheduling	56
5.1.1	Long Term Planning	57
5.1.2	Initial Scheduling	57
5.1.3	Daily Planning and Scheduling	58
5.1.4	Planning Aids	59
5.2	Uplink Generation	59
5.3	Real-Time Operations	60
5.4	Performance Verification	61
5.5	Database and Software Maintenance	61
5.6	Early Orbit Operations	62
5.6.1	Launch - Orbit Acquisition Mission Phases	63
5.6.2	Activation	67
5.6.3	Transition to Orbital Operations	68
5.7	Spacecraft Maneuvers	69
5.8	Special Observations	69
5.9	Contingencies	69
6	INTERFACE EXCHANGE ITEMS	72
6.1	Planning and Scheduling	72
6.2	Command Generation	73
6.3	Real Time Operations	73
6.4	Analysis	73
6.5	Operations Database	74
6.6	Other Interface Exchange Items	74

TABLE OF CONTENTS (continued)

SECTION/ PARAGRAPH	TITLE	PAGE
7	JOINT OPERATING PROCEDURES	75
7.1	PI/EOC FOT Interface	75
7.1.1	Daily Operations Planning	75
7.1.2	Command Generation	76
7.1.3	Special Operations	76
7.1.4	EOC Database	76
7.1.5	Microprocessor Load Verification	76
7.2	PI/EOC Command Management Interface	77
7.2.1	Operations Plans	77
7.2.2	Planning Aids	77
7.2.3	Command Generation	77
7.2.4	Performance Feedback	77
7.3	PI/FOT Interface	78
7.3.1	Real Time Operations	78
7.3.2	Special Operations	78
7.3.3	Initial Operations	78
7.3.4	Performance Verification	78
7.4	PI/DAAC Interface	79
7.5	PI/ Access to Telemetry	79
8	IMPLEMENTATION AGREEMENTS	80
8.1	Flight Operations Database	80
8.1.1	Commands	80
8.1.2	Instrument Telemetry	80
8.1.3	Instrument Limits	80
8.1.4	Database Approval	81
8.2	Operational Displays	81
8.3	Operations Procedures	81
8.3.1	EOC Definition	81
8.3.2	I&T Procedures to EOC Operations Procedures Conversion	81
8.3.3	I&T Databases to EOC Operations Databases Conversion	82
8.3.4	Flight Unique Procedures	82
8.3.5	Procedure Submittal	82
8.3.6	Approved EOC Procedures	82
8.3.7	Procedure Verification	82
8.4	Narrative Procedures	82
8.4.1	Standard Operating Procedures	83
8.4.2	Contingency Operating Procedures	83

TABLE OF CONTENTS (continued)

SECTION/ PARAGRAPH	TITLE	PAGE
	APPENDIX I	
10	SPACECRAFT CONTROLS COMPUTER INSTRUMENT REQUIREMENTS	84
10.1	Stored Command Requirements	84
10.1.1	Absolute Time Commands	84
10.1.2	Relative Time Command Sequences	84
10.2	Telemetry Monitor Requirements	84
	APPENDIX II	
20	INSTRUMENT COMMAND PROCESSING REQUIREMENT	
20.1	Activity Planning Requirements	85
20.1.1	Activity Definition	85
20.1.2	Event Definition	85
20.1.3	Activity Scheduling	85
20.2	Constraint Check Requirements	85
20.2.1	Command Level	85
20.2.2	Activity Level	85
20.2.3	Schedule Conflicts	86
20.3	Real-Time Command Requirements	86
20.3.1	Utilization Plans	86
20.3.2	Command Generation Capabilities	86
20.3.3	Transmission Requirements	86

TABLE OF CONTENTS (continued)

SECTION/ PARAGRAPH	TITLE	PAGE
20.4	Microprocessor Load Handling Requirements	86
20.4.1	Uplink Message Structures	86
20.4.2	Transmission Requirements	86
20.5	Command Database Requirements	86
20.5.1	Command Definition	87
20.5.2	Unique Command Structures	87
20.5.3	Activity Definitions (EOC Command Management)	87
20.5.4	Stored Command Sequences (EOC Command Management)	87
20.5.5	Real-Time Command Sequences (EOC)	87
20.5.6	Utilization Constraints	87

APPENDIX III

30	TELEMETRY PROCESSING REQUIREMENTS	88
30.1	Decommutation Requirements	88
30.1.1	Engineering Telemetry Format	88
30.1.2	Science Telemetry Format (20 Mbps)	88
30.2	Derived Function Generation Requirements	88
30.3	Status Determination Requirements	88
30.3.1	Mode Definition	88
30.3.2	Event/Mode-Change Detection	88
30.4	Uplink Verification Requirements	89
30.4.1	Command Verification	89
30.4.2	Microprocessor Load Verification	89
30.5	Health and Safety Monitoring Requirements	89
30.5.1	Limit-Check Requirements	89
30.5.2	Alarm Requirements	89
30.6	Display Generation Requirements	89
30.6.1	Parameter Calibration	89
30.6.2	CRT Page Display	90
30.6.3	Strip-Chart Recorder Displays	90
30.6.4	Hardcopy Outputs	90

TABLE OF CONTENTS (continued)

SECTION/ PARAGRAPH	TITLE	PAGE
30.7	EOC Telemetry Database Requirements	90
30.7.1	Telemetry Function Definition	90
30.7.2	Derived Function Definition	90
30.7.3	Mode/Event Definition	90
30.7.4	Limit Check Thresholds	90
30.7.5	Alarm Generation Criteria	90
30.7.6	Command Verification Criteria	91
30.7.7	Display Definition	91
30.7.8	Calibration Parameters	91

APPENDIX IV

40	INSTRUMENT OPERATIONAL ACTION REQUIREMENTS	
40.1	Contingency Action Requirements	92
40.1.1	Emergency Power-Down	92
40.1.2	Limits/Alarm Reaction	92
40.1.3	Spacecraft Safe hold (SCC running)	92
40.1.4	SCC Halted	92
40.1.5	Other On-board Computers Halted	92
40.1.6	Uplink Transmission Failure	92
40.2	Preactivation Requirements	92
40.3	Spacecraft Maneuver Accommodation	93
40.3.1	Orbit Adjust	93
40.4	Alignment/Calibration Requirements	93
40.5	Special Observation Requirements	93

APPENDIX V

50	PLANNING AID REQUIREMENTS	94
50.1	Parameter Definition	94
50.1.1	Long Term	94
50.1.2	Short Term	95
50.2	Parameter Specifications	95
50.2.1	Information Accuracy	95
50.2.2	Data Precision	95
50.2.3	Data Frequency	96
50.3	Information Handling Requirements	96
50.3.1	Format	96
50.3.2	Packaging	96

TABLE OF CONTENTS (continued)

SECTION/ PARAGRAPH	TITLE	PAGE
50.4	Access Timeline Requirements	96
50.4.1	Lead Time	96
50.4.2	Retention	96

APPENDIX VI

60	SPECIAL ACTIVATION REQUIREMENT	97
60.1	Commanding Requirements	97
60.1.1	Special Command Sequences	97
60.1.2	Special Command Constraints	97
60.1.3	Real-time Command Generation	97
60.1.4	Special Command Transmission Requirements	97
60.2	Telemetry Processing Requirements	97
60.2.1	Special Telemetry Formats	97
60.2.2	Special Processing Functions	98
60.2.3	Special Processing Parameters	98
60.2.4	Special Displays	98
60.2.5	Strip Chart Recorder	98
60.3	Remote Support Coordination Requirements	98
60.3.1	Quick-look Playback Handling	98
60.3.2	Voice Communications	98
60.4	Facility Requirements	98

APPENDIX VII

70	ABBREVIATIONS	99

LIST OF FIGURES

FIGURE	TITLE	PAGE
1	MOPITT Modes Transitions	5
2	EOS-AM Spacecraft Mission Phases	11
3	Uplink Paths	12
4	Downlink Paths	13
5	Absolute Time Stored Command Structure	17
6	Absolute Time Stored Command Operation	18
7	Relative Time Command Sequence Structure	19
8	Relative Time Command Sequence Operation	20
9	CTIU Command Processing Flow	22
10	CTIU Telemetry Processing Flow	23
11	SFE Interface Block Diagram	27
12	SSR Basic Configuration	28
13	SSR Science Data Buffer Utilization	30
14	SSR Typical Operating Scenario	31
15	SSR Operation Profile	34
16	Typical Operational Initialization Phase Activities Timeline	35

LIST OF FIGURES (continued)

FIGURE	TITLE	PAGE
17	Orbit Maintenance Scenario	36
18	Spacecraft Operating Modes Availability	38
19	Top Level Space Network Scheduling Process	46
20	EOC / Space Network Scheduling Timeline	47
21	EOC Staffing Structure	51
22	MOPITT IST User Perspective	53
23	Launch / Ascent Phase Timeline	65
24	Orbit Acquisition Mission Phase Timeline	66
25	DELTA-V Activity Flow	67
26	PI Facility / EOC FOT Interface	75

LIST OF TABLES

TABLE	TITLE	PAGE
I	MOPITT Operating Modes	4
II	Proposed SSR Buffer Sizing	29
III	Spacecraft Bus and MOPITT Operating Modes	44

TO BE DETERMINED (TBD) LIST

TBD	SEC. / PAGE	DESCRIPTION	RESPONSIBLE	DUE

This list will be added with the final update

TO BE REVIEWED (TBR) LIST

TBR	SEC. / PAGE	DESCRIPTION	RESPONSIBLE	DUE

This list will be added with the final update.

TO BE SUPPLIED (TBS) LIST

TBS	SEC. / PAGE	DESCRIPTION	RESPONSIBLE	DUE

This list will be added with the final update.

(This page intentionally left blank.)

1 INTRODUCTION

This Instrument Flight Operations Understanding (IFOU) is a statement of the EOS-AM community's understanding regarding the Measurement Of Pollution In The Troposphere (MOPITT) flight operations plans and requirements.

This Instrument Flight Operations Understanding will be updated periodically as requirements evolve and are further defined. Inputs are welcomed from the Instrument Team, Flight Operations Team, EOS Ground Systems, NASA Institutional Facilities, and the EOS-AM Project entities.

1.1 Purpose

This IFOU will be used by the Flight Operations Team (FOT) and EOS Operations Center (EOC) support personnel in defining prelaunch preparation efforts and in verifying operational readiness prior to launch. Requirements for specific types of operational support will be defined and implemented consistent with this IFOU. This IFOU will be used to ensure that instrument needs are properly reflected in other documentation.

1.2 Scope

This document describes the EOS-AM Spacecraft MOPITT operations on-orbit and instrument flight operations support. The focus is from the Flight Operations Team's perspective.

Interactivity with ground systems control and interconnectivity to the EOS ground systems segment are described. Institutional interfaces between Spacecraft, applicable ground systems and the end-user are included. The flight operations scheduling, planning, and operations philosophy are included. Aspects of the Earth Observing System Data and Information System (EOSDIS), as well as the external systems / facilities with which the Spacecraft flight operations elements interface, are only addressed as required to clarify these concepts.

The understandings stated herein are explicitly subordinate to interfaces between MOPITT and the EOS-AM Spacecraft, as defined in the most recent issue of the documents listed in Section 2.

This document does not take precedence over any of the requirements, specifications, documents or interfaces associated with the Spacecraft or affiliated ground systems.

2 DOCUMENTATION

2.1 Applicable Documents

The concept and content of this document are consistent with the documents listed below:

(GSFC) - 421-10-01 30 Oct. 1992	Requirements Document for the EOS-AM Spacecraft
(GSFC) - 420-03-02 01 Dec. 1992	General Instrument Interface Specification
20005396 (SEP-101) 15 May 1992	EOS-AM Spacecraft Contract End Item Specification
(GSFC) - 421-12-15-02 Date: TBD	Unique Instrument Interface Document for MOPITT
(GSFC) - 420-05-02 13 Nov. 1992	Performance Assurance Requirements for the EOS-AM Observatories
20008850 Date: TBD	MOPITT Interface Control Document (ICD)

2.2 Information Documents

The following documents amplify or clarify the information presented in this document.

20008529 (OPD-110) 18 May 1992	EOS-AM Spacecraft Operations Requirements
EOS-DN-SE&I-010 15 May 1992	EOS Baseline Description Document (BDD)
EOS-DN-SE&I-031 23 Apr. 1992	Command and Telemetry Requirements Analysis
EOS-DN-C&DH-032 15 Dec. 1991	Command and Telemetry Concept Definition
GSFC-510-30CD/0191 19 March 1993	Earth Observing System Data and Information System (EOSDIS) Flight Operations Segment (FOS) Operations Concept (Revision 4)
20008502 (UID-101) 04 Sept. 1992	General Instrument Interface Handbook

3 INSTRUMENT DEFINITION

The understandings regarding MOPITT are as follows:

3.1 Basic Description

MOPITT is an infrared gas-correlation radiometer which senses upwelling infrared radiation in several emission bands of carbon monoxide (CO) and total column methane (CH_4). The instrument measures the CO and the CH_4 column amount with a horizontal resolution of 22 km x 22 km and provides profiles of CO with a horizontal resolution of 22 km x 22 km and a vertical resolution of 3–4 km. These measurements are used in studies to determine how the lower atmosphere interacts with the surface, ocean, and biomass systems.

MOPITT has eight optical channels, each with dedicated detectors and bandpass filters. There are four optical systems, each of which services two channels – one shortwave channel at about 2.4 μm whose data are only valid during daylight and a longwave channel at 4.7 μm whose data are valid at all times. There are a total of six gas correlation systems. In some cases the gas correlation filter is shared between two channels.

MOPITT is designed to be a monitoring instrument with few operating modes. The general operational scenario will be to adjust the instrument for satisfactory operation and then collect data until such time as the operating parameters drift out of a satisfactory envelope, at which time the instrument will be re–adjusted. Calibration sequences are performed automatically by the instrument at preset (programmable) time intervals.

MOPITT contains an instrument microprocessor. This microprocessor is designated "the instrument computer". The instrument computer forms the heart of the instrument's electrical subsystem. With the exception of the spacecraft communications interface, the instrument computer is in control of all the electronics within the instrument. The instrument computer also provides an external test port and supporting functionality to allow instrument control, diagnosis, health and status monitoring during ground testing. Instrument computer details are TBD.

MOPITT instrument telemetry contains science, engineering, and housekeeping data. MOPITT data is recorded on-board the Spacecraft and transmitted (downlinked) during scheduled EOS-AM/TDRSS contact periods. The downlinked data is packetized and packet types assigned Application Process Identifiers (APID's).

3.2 Instrument Operations

MOPITT activities are preplanned and scheduled. The MOPITT instrument computer and Spacecraft Controls Computer (SCC) instrument commands are loaded on a TBD schedule. The instrument computer and SCC commands are uplinked by the EOS Operations Center (EOC) during EOS-AM/TDRSS contact periods.

The nominal MOPITT operational timeline is a continuous cross–track scan of ± 14 views, each of approximately 0.43 seconds duration. The scan is interlaced with alternate views being seen on the left–right and right–left halves of the scan. This scanning sequence is punctuated by a calibration sequence during which time a space view (90° from nadir view) and calibration view (180° from nadir view) are each observed for 30 seconds (nominal, programmable). These sequences occur at 30 minute (nominal, programmable) intervals. The calibration interval is arranged to be asynchronous to the orbit period.

3.2.1 Operating Modes

Five Modes have been identified for the MOPITT instrument (see Table I).

TABLE I MOPITT OPERATING MODES

	OFF	Emergency	Launch	Idle	Ready
120 V	off	on	on	on	on
Power Supply	off	TBD	launch (TBD)	idle	ready
C&T Bus	off	off	on	on	on
Science Bus	off	off	off	off	on

Mode change commands are scheduled stored commands loaded into the Spacecraft Bus SCC.

The following is a brief description of the MOPITT instrument modes.

a. Off – Instrument power is OFF and survival heaters are enabled. The maximum duration in this mode (without the survival heaters powered) is two hours after switching from either the Full Power Mode or Survival Mode in orbit.

b. **Emergency** – This is an extreme low power form of survival. The 120 Vdc is powered to the instrument but the power supplies are turned off or are in a reduced power mode. This mode allows the heaters to be controlled by the BDU only. This mode would only be used in an extreme submode of the spacecraft survival mode.

c. **Launch** – This mode is required to protect the various mechanisms of the instrument. The details of this mode are TBD.

d. **Idle** – This mode is used during the power–up sequence and as a reduced power state. Full C&T is available and the instrument computer is on. Limited monitoring is available in this mode. Software reprogramming procedures can be invoked in this mode

e. **Ready** – This is the normal operational mode of the instrument. All of the mechanisms and the electronics are turned on. The instrument is measuring radiances and formatting data for the science bus. The estimated power consumption is 180 Watts. The main operations sequences will be invoked from this mode.

During ready mode the following procedures/functions can be invoked:

- dust cover procedures
- scan procedures
- calibration procedures
- evaporate procedure
- check–out functions
- program functions

Transitions from mode to mode are made by ground command with the exception that a transition out of the ready mode can be made autonomously by the instrument on detection of a fault condition. Figure 1 illustrates the flow and transition of the MOPITT operational modes.

MOPITT Mode transitions are TBD

FIGURE 1 MOPITT MODE TRANSITIONS

Other Mode details are TBD.

3.2.2 Microprocessor Operation

The MOPITT microprocessor operational details are TBD.

3.2.3 Instrument Commands

The majority of instrument commanding is performed through the use of the MOPITT microprocessor (TBD). The microprocessor requires only (TBD) commands from the SCC. These commands are issued to the instrument in accordance with the time tag associated with each command.

Detail definition with specific commands is TBD. The extent to which macro commands may be used to "package" numerous separate commands is TBD.

Real time commanding is not planned as a routine operation, however, contingency or emergency operations may require real time commanding.

3.2.4 Instrument Telemetry

Specific MOPITT instrument telemetry processing requirements are defined in Appendix III.

3.2.4.1 Science Data

Specific MOPITT instrument science telemetry processing requirements are defined in Appendix III.

3.2.4.2 Engineering Data

Specific MOPITT instrument engineering telemetry processing requirements are defined in Appendix III.

3.2.4.3 Housekeeping Data

The MOPITT housekeeping data is used by the Flight Operations Team for the following applications:

a. Monitor health and safety
b. Verify command execution

Specific MOPITT instrument housekeeping telemetry processing requirements are defined in Appendix III.

3.2.5 Bus Data Unit

MOPITT will share assignment of Bus Data Unit (BDU)-1 with the CERES and MISR instruments. The MOPITT interface with BDU-1 is: (TBR)

TYPE	NUMBER	
	Instrument	Accommodations Equipment
Relay Drive	20	30
Bi-Level	16	11
Passive Analog	21	39

3.2.6 Operating Constraints

A constraint is a limitation imposed on the operation of the Spacecraft Bus and instruments in order to protect or prevent compromise of mission goals.

3.2.6.1 Categories of Constraint/Restraints

Constraints have been defined into the following six categories based upon the implications of violating those constraints:

a. **Mission Critical (MC)** - Those constraints which prevent permanent loss of a system, subsystem, or a component which would cause the termination of the mission. The damage to the hardware can be due to anything from a one time event to improper usage over an extended period of time.

b. **Hardware Critical (HC)** - Those constraints which prevent permanent loss of Spacecraft hardware from which recovery to full Spacecraft operational state *can not* be made. The damage to the hardware can be due to anything from a one time event to improper usage over an extended period of time. (e.g. Loss of either CERES instrument would fall into this category.)

c. **Configuration Critical (CC)** - Those constraints which prevent the loss of Spacecraft hardware from which recovery to full Spacecraft operational state *can be* made by switching to redundant hardware.

d. **Data Critical (DC)** - Those constraints which prevent permanent loss or corruption of a particular set of data, either command or telemetry.

e. **Temporary Data Loss (TL)** - Loss or corruption of data, either command or telemetry, that can be regained.

f. **Operational Restriction (OR)** - Guidelines for procedures when a number of possible operational options exist or information relevant to the proper operation of the Spacecraft.

3.2.6.2 MOPITT Operating Constraints

a. Initial activation shall be performed during real-time contact with the Spacecraft.

Additional MOPITT operating constraints are TBD.

3.2.7 Activation

MOPITT is configured for activation as follows:

MOPITT is powered on and checked out during the Spacecraft Operational Initialization Mission Phase.

The Activation Procedure is used for the power-up phase. The sequence of operations is as follows:

a. **Outgassing interval** – The instrument is allowed to outgas at minimal operating levels.

b. **First checkout phase** – All mechanisms are off. The covers are closed. Commands and computers are verified. The mechanisms are tested one at a time. The targets and thermostats are exercised.

c. **Second checkout phase** – First confirm that spacecraft outgassing is within tolerable limits. Activate Stirling Cycle Coolers. Confirm operation of coolers.

d. **Third checkout phase** – Activate signal channels. Verify system operation using internal targets and inside of space door. Verify system noise levels. Perform initial setting of molecular sieves and mechanism rates.

e. **First Data Phase** – Open space cover. Verify calibration using targets and space view.

f. **Second data Phase** – Open earth cover. Begin initial data taking phase.

g. **Data acquisition phase** – Continue acquisition of science data. Review calibration data on ongoing basis.

MOPITT is now in the main operating mode and will remain there for most of its life. There are three other phases:

a. **Adjustment Phase** – Entered when some calibration parameter drifts out of limits or when anomalous science data detected. Frequency of calibrations increases, mechanism rates/temperatures/pressures are adjusted according to conditions. New conditions are reviewed and if satisfactory a return to data acquisition phase is made.

b. **Maneuver Phase** – Entered when spacecraft performing some maneuver assuming that spacecraft has not entered standby mode. Mirrors to park position (180° from earth view – view internal target). Covers TBD. Return to acquisition phase after maneuver.

c. **Failure Phase** – Entered on on–board or ground detection of TBD problem. Transition to idle mode with Stirling Cycle Coolers off. Ground review of problem. Manual transition to adjustment phase to test problem resolution.

4 OPERATIONAL SYSTEM DEFINITION

The understandings regarding operation of the EOS-AM Spacecraft and ground system, as each relates to instrument operation, are as follows:

4.1 Spacecraft Bus

The EOS-AM Spacecraft Bus provides the platform for science instrument observations, and provides the environment and services necessary to sustain instrument operability.

The EOS-AM Spacecraft mission can be described by seven mission phases. Each mission phase represents a predefined period during which a set of interrelated operations and activities are performed. The primary activities associated with these mission phases are:

a. Prelaunch -- Launch readiness of the Spacecraft, launch vehicle, and associated ground elements is established and verified.

b. Launch / Ascent -- The launch vehicle places the Spacecraft in the injection orbit and the Spacecraft senses separation from the launch vehicle.

c. Orbit Acquisition Initialization -- A positive Spacecraft energy balance and a S-Band communications link is established. A stable earth-oriented attitude is attained.

d. Orbit Acquisition -- The Spacecraft performs the maneuvers necessary to achieve operational orbit. These maneuvers are designed by the cognizant operations elements and initiated by ground command under Flight Operations Team control.

e. Operational Initialization -- The Spacecraft operational orbit is acquired. A complete housekeeping and instrument equipment checkout is performed by the Flight Operations Team with technical direction from the Spacecraft Bus contractor and the instrument PIs or delegates. A fully operational Spacecraft state is established.

f. Operational -- The Flight Operations Team is responsible for conducting Spacecraft operations. Proper Spacecraft orbit is maintained and full resources to the instruments are provided during the science mode.

g. End of Mission -- Upon decision to end the Spacecraft mission, the Spacecraft is placed in a dormant state and permitted to experience a normal orbit decay to re-entry into the Earth's atmosphere.

Figure 2 depicts a top-level flow of the EOS-AM Spacecraft mission phases.

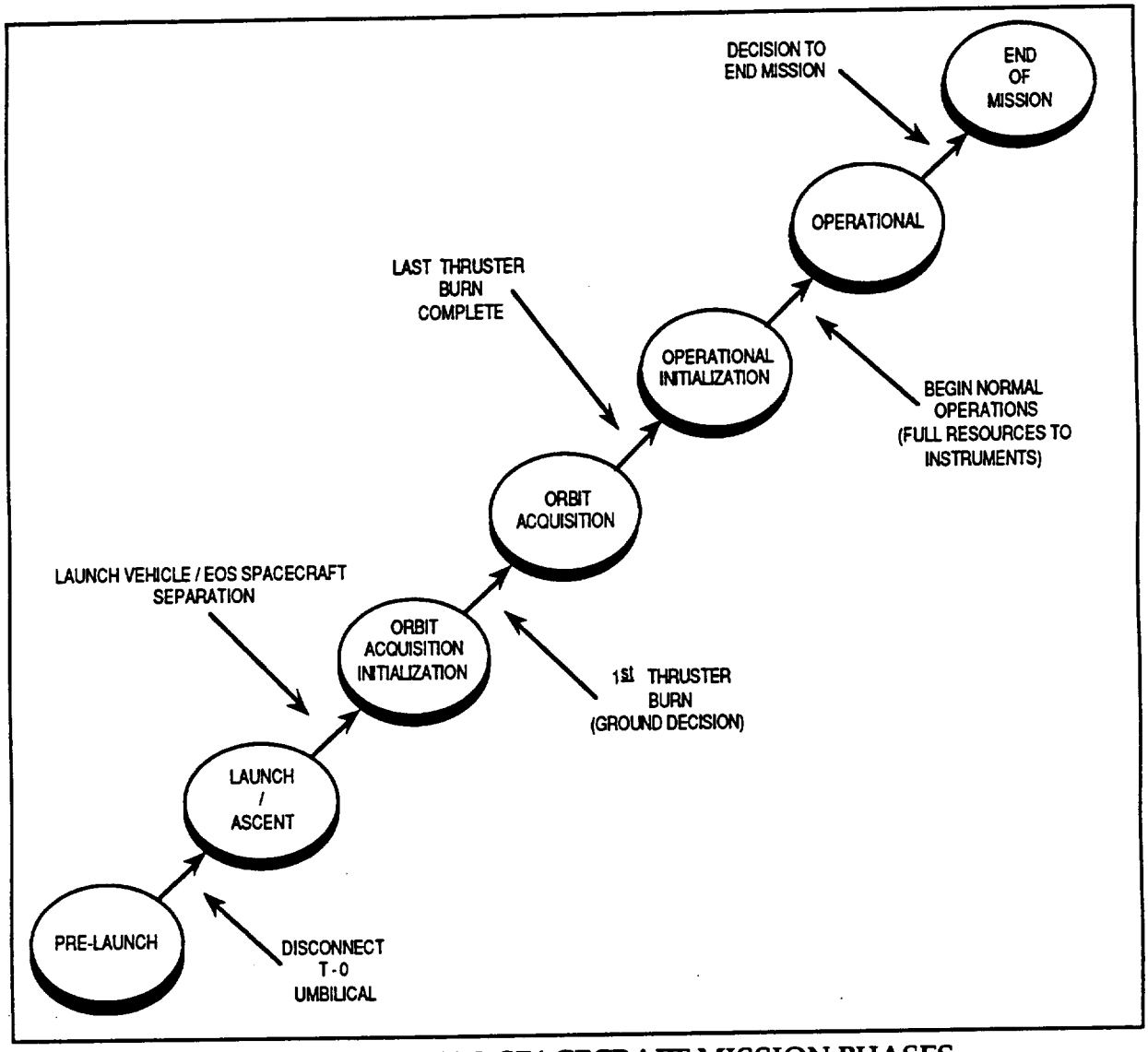

FIGURE 2 EOS-AM SPACECRAFT MISSION PHASES

4.1.1 Command and Telemetry Systems

The Spacecraft Bus command system provides the primary means of controlling the Spacecraft and instrument operations while in orbit. The Spacecraft Bus telemetry system provides the means for monitoring Spacecraft status, health and safety, and for acquiring/storing and retrieving EOS-AM science data. Command and telemetry systems hardware also generates and distributes timing signals, and produces the relative time code which appears within the telemetry format.

During normal operations, 150 Mbps science playback data (when commanded) and 16 kbps real-time housekeeping telemetry data is transmitted throughout each Spacecraft/TDRSS contact. 10 kbps command capability is available to handle uplink transmissions. The other Spacecraft Bus command and telemetry link capabilities are shown in Figure 3 (Uplink Paths) and Figure 4 (Downlink Paths). Commands may be preloaded into the SCC and issued by the stored command capability at designated times. Repetitive sequences of commands may be stored within the SCC and activated by an initiate command to reduce command transmission and storage volume.

SERVICE	SPACECRAFT ANTENNA	DATA RATE	REMARKS
SSA	HIGH GAIN	10 Kbps	NORMAL COMMAND OPERATIONS HIGH-RATE COMMANDS
SMA	HIGH GAIN	1 Kbps	LOW-RATE COMMANDS
SSA	OMNI	125 Bps	CONTINGENCY VERY LOW-RATE COMMANDS
DSN/GN/WOTS	OMNI	2 Kbps	EMERGENCY

LEGEND

SSA = S-BAND SINGLE ACCESS
SMA = S-BAND MULTIPLE ACCESS
DSN = DEEP SPACE NETWORK
GN = GROUND NETWORK
WOTS = WALLOPS ORBITAL TRACKING STATION

FIGURE 3 UPLINK PATHS

SERVICE	TYPE	DATA RATES I	Q	ANTENNA	CONTENT	USE
KSA	Play Back or Real Time	75 Mbps	75 Mbps	High Gain	Science Data	Science Mission Processing
SSA	Play Back		256 Kbps	High Gain	Health & Safety Housekeeping Data SCC Dump Data	As required for Anomaly follow up
	Real Time	16 Kbps	16 Kbps			Routine Operation
			1 Kbps	OMNI	Critical Health & Safety SCC Dump Data	Operation without High Gain Antenna
			1 Kbps			
SMA	Real Time		16 Kbps	High Gain	Housekeeping Data Diagnostic	Operation without SSA
DSN GN WOTS	Real Time	16 Kbps	16 Kbps	OMNI	Housekeeping Data Diagnostic	Operation without TDRSS
	Play Back		512 Kbps			Emergency Operations
DB	Real Time	12.5 Mbps	12.5 Mbps	Direct Access System	Real-Time Science Data	MODIS Real-Time Data
DB/DDL		12.5 Mbps	105 Mbps			MODIS (I), ASTER (Q) Real-Time Data
DP	Play Back	75 Mbps	75 Mbps	Direct Access System	Playback Science Data	Instrument Playback Data
DB	Real Time	12.5 Mbps		Direct Access System	Real-Time Science Data	MODIS Real-Time Data
DP	Play Back		105 Mbps		Playback Science Data	Instrument Playback Data

LEGEND

DB = Direct Broadcast
DDL = Direct Downlink
DP = Direct Playback
DSN = Deep Space Network
GN = Ground Network
WOTS = Wallops Orbital Tracking Station

KSA = K-band single access
SSA = S-band single access
SMA = S-band multiple access
TDRSS = Tracking and Data Relay Satellite System

FIGURE 4 DOWNLINK PATHS

The Direct Access System (DAS) provides for direct-to-user downlink of science data via the X-band transmission system which is independent of the High Gain Antenna (HGA). A summary of Spacecraft downlink services, including the DAS, is shown in Figure 4 (Downlink Paths).

Normal operation will be to configure the DAS for continuous operation in the Direct Broadcast (DB) mode, providing uninterrupted output of real-time MODIS science data along the orbital path. When scheduled by the EOC, the DAS Direct Broadcast/Direct Downlink (DB/DDL) mode will provide direct-to-user ASTER science data on the X-Band Q channel, in addition to the MODIS data on the X-Band I channel.

The DAS Direct Playback (DP) mode is considered an emergency mode and will be used only in the event the Solid State Recorder (SSR) science data cannot be played back through the HGA.

The EOC scheduling function will coordinate DAS operations with the user ground stations. The Spacecraft DAS services will be managed via the SCC stored command and Relative Time Command Sequence (RTCS) capability.

4.1.2 Spacecraft Controls Computer

The Spacecraft Controls Computer (SCC) provides the hardware, software and firmware support for control of on-board operational processes.

Specific requirements for interaction between SCC functions and instrument operation are defined in Appendix I.

4.1.2.1 Spacecraft Controls Computer Description

There are redundant SCCs, each of which hosts the firmware to provide SCC initialization functions. Both SCCs can be simultaneously powered and host the full software load but only one SCC can be active at any time. Once loaded, the active SCC software provides a real-time Operating System and supports the execution of application software for the Spacecraft subsystems and instruments. The SCC provides a number of application software services to maintain Spacecraft and instrument operability.

a. The SCC Operating System/Executive is a standardized operating system which supports the execution of the SCC applications software and manages the SCC resources (I/O, scheduling, memory management, timing).

b. The Command, Telemetry and Control (CT&C) application interfaces with all SCC-resident software and provides the following services:

1. Validation and distribution of ground commands for SCC applications software execution.

2. Performs system level Fault Detection, Isolation and Recovery (FDIR). The FDIR software resides in the SCC applications programs and in the Telemetry Monitor (TMON).

3. Storage and processing of Absolute Time Commands (ATC) and Relative Time Command Sequences (RTCS).

4. Sequencing control of SCC-issued subsystem and instrument commands (Absolute-time stored commands, Relative-time stored commands, closed-loop control commands and FDIR commands).

5. Performs Spacecraft Time management, and provides for generation and distribution of the SCC Time of Day (TOD) information to the instruments.

6. Collects SCC telemetry for inclusion in the downlinked telemetry stream.

7. Collects, formats and distributes Ancillary data to the instruments via the Command & Telemetry Bus.

c. The Attitude Determination and Control (ADAC) application software provides software to acquire and maintain Spacecraft attitude within the accuracy limits necessary for instrument operation. The ADAC application provides control of the Solar Array Drive and High Gain Antenna via closed-loop control and FDIR commands.

d. The Navigation (NAV) software performs Spacecraft orbit determination and control. NAV provides position and vector information to the ADAC. NAV also provides telemetry data, Doppler compensation information, closed-loop control and FDIR commands.

e. The Thermal Monitor and Control Software (TMCS) provides autonomous control of the active Spacecraft thermal control elements [Heater Controller Electronics (HCEs) and Capillary Pump Heat Transport System (CPHTS)] to maintain the Spacecraft bus and instrument temperatures within allowable operational limits. The TMCS provides telemetry data, closed-loop control and FDIR commands.

f. The Power Monitor and Control Software (PMCS) provides autonomous control of the Electrical Power System (EPS), including battery charge control and automatic load shedding. The PMCS provides telemetry data, closed-loop control commands and FDIR commands.

The Telemetry Monitor (TMON) will be used to monitor critical Spacecraft bus and instrument telemetry. TMON provides the on-board capability to monitor spacecraft housekeeping data and SCC memory and to initiate autonomous action when predefined anomalous conditions occur. TMON has the capability to mask out telemetry information, perform logical operations on the telemetry information and compare the results to predefined values. If specific anomalous conditions occur, TMON will trigger predetermined actions which may be 1) no action, 2) issue a spacecraft command, or 3) issue a command to activate a Relative Time Command Sequence (RTCS). When a TMON action is triggered, a message will be inserted in the spacecraft activity log which will specifically define the action taken. TMON is table-driven via the telemetry monitor tables, which are ground-controllable. Each TMON function may be individually enabled or disabled by ground command. Each TMON function may also be inhibited from issuing its predetermined commands, while still being allowed to perform its comparison check and notify the activity log if an anomalous condition is detected.

The Fault Detection, Isolation and Recovery (FDIR) system is designed to autonomously reconfigure the Spacecraft in response to predefined survival-critical hardware or software failures. The intent of the FDIR is to minimize autonomous switching, while protecting the Spacecraft Bus and instruments and providing those services required for survival. Anomalies which are not time critical will be resolved by ground intervention rather than FDIR action. Most of the FDIR software resides in the SCC application software programs. FDIR utilizes the TMON software to perform simple, table-driven FDIR functions.

The FDIR system monitors the state of various Spacecraft hardware and software functions, determines fault occurence and generates fault recovery commands to the Spacecraft. When necessary, the FDIR controls the Spacecraft entry into Safe

Mode and Survival Mode. Since the SCC may not be functional during these modes, some FDIR functions are distributed in hardware thoughout the Spacecraft. If the SCC is non-functional, stored command and RTCS operation will also be interrupted. Safe Mode and Survival Mode recovery will be accomplished only by ground command.

4.1.2.2 Spacecraft Controls Computer Operation

During normal flight operations a SCC stored command table memory load will be performed once per day with the list of Absolute Time Commands (ATC) and associated time tags necessary to perform Spacecraft operations for the next 24 hours. Figure 5 shows the stored command structure.

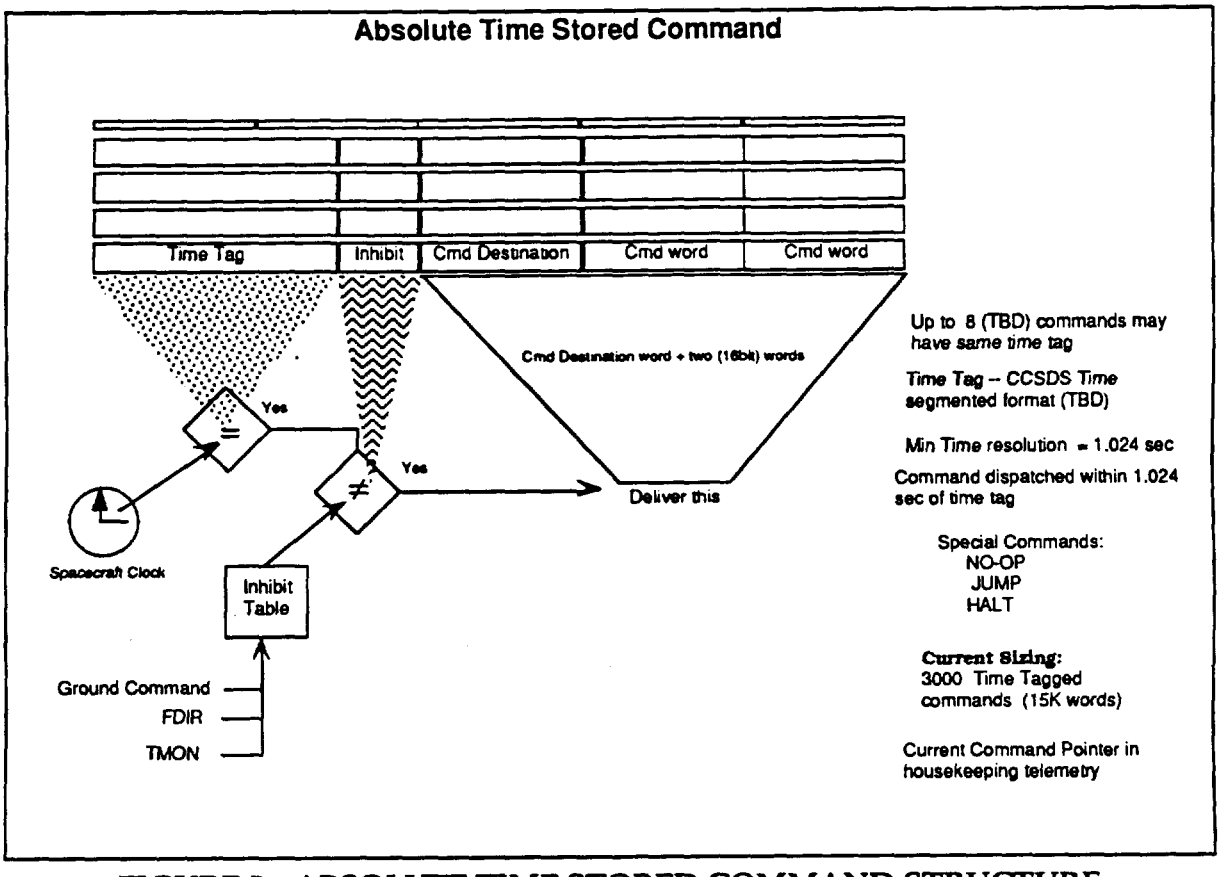

FIGURE 5 ABSOLUTE TIME STORED COMMAND STRUCTURE

The SCC will distibute each stored command to the appropriate spacecraft or instrument subsystem when the time tag matches the Spacecraft time. The command time tag resolution is 1.024 seconds. The SCC has the capability to accept, store and distribute up to 3000 stored commands. Each stored command has an associated inhibit identifier by which the SCC identifies the functional group to which the command belongs. All commands in a functional command group (as determined by the SCC inhibit table) may be inhibited from execution by either ground command or FDIR/TMON generated command. Figure 6 depicts stored command operation. Stored command loads will be planned to occur at least 6 hours prior to the end of the last stored command load, so there may be up to 30 hours of Spacecraft commands in the stored command table at that time. Specific stored-command requirements for instrument operation are defined in Appendix I.

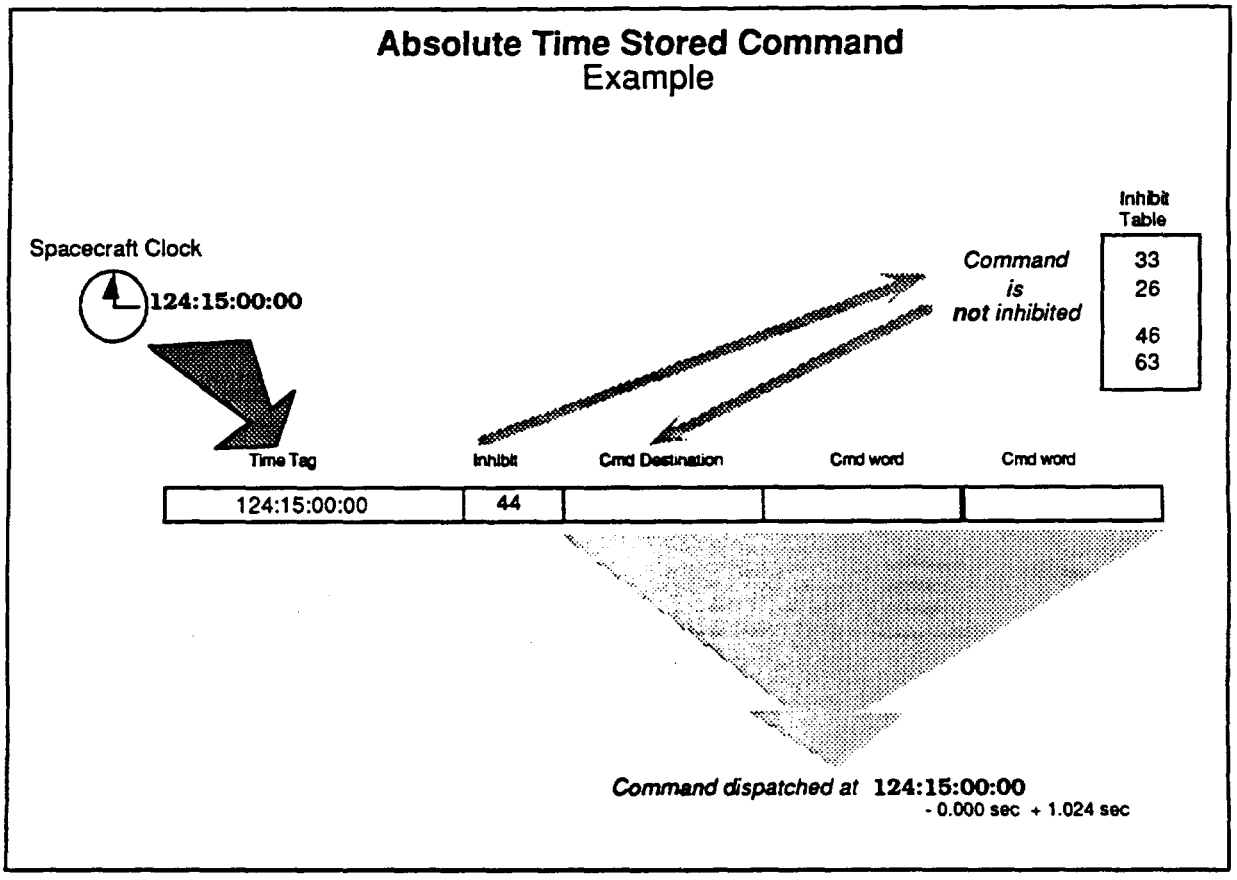

FIGURE 6 ABSOLUTE TIME STORED COMMAND OPERATION

During flight operations, groups of commands known as Relative Time Command Sequences (RTCSs) will be used to provide at least 128 SCC-resident predefined command sequences. Each RTCS has an associated RTCS sequence number, an inhibit ID, and up to 16 Relative Time Commands with associated relative time tags. Figure 7 illustrates the RTCS structure. RTCSs may be executed by ground command, stored command, SCC (FDIR/TMON) generated command or by another Relative Time Command. The relative time tag associated with each command defines the time delay relative to the previously dispatched command. Relative time tags have a resolution of 1.024 seconds. Each RTCS will have an associated inhibit identifier by which the RTCS may be inhibited from execution by ground command or FDIR/TMON generated command. No inhibit identifier will be provided for individual commands within the RTCS. Multiple RTCSs may be active at the same time.

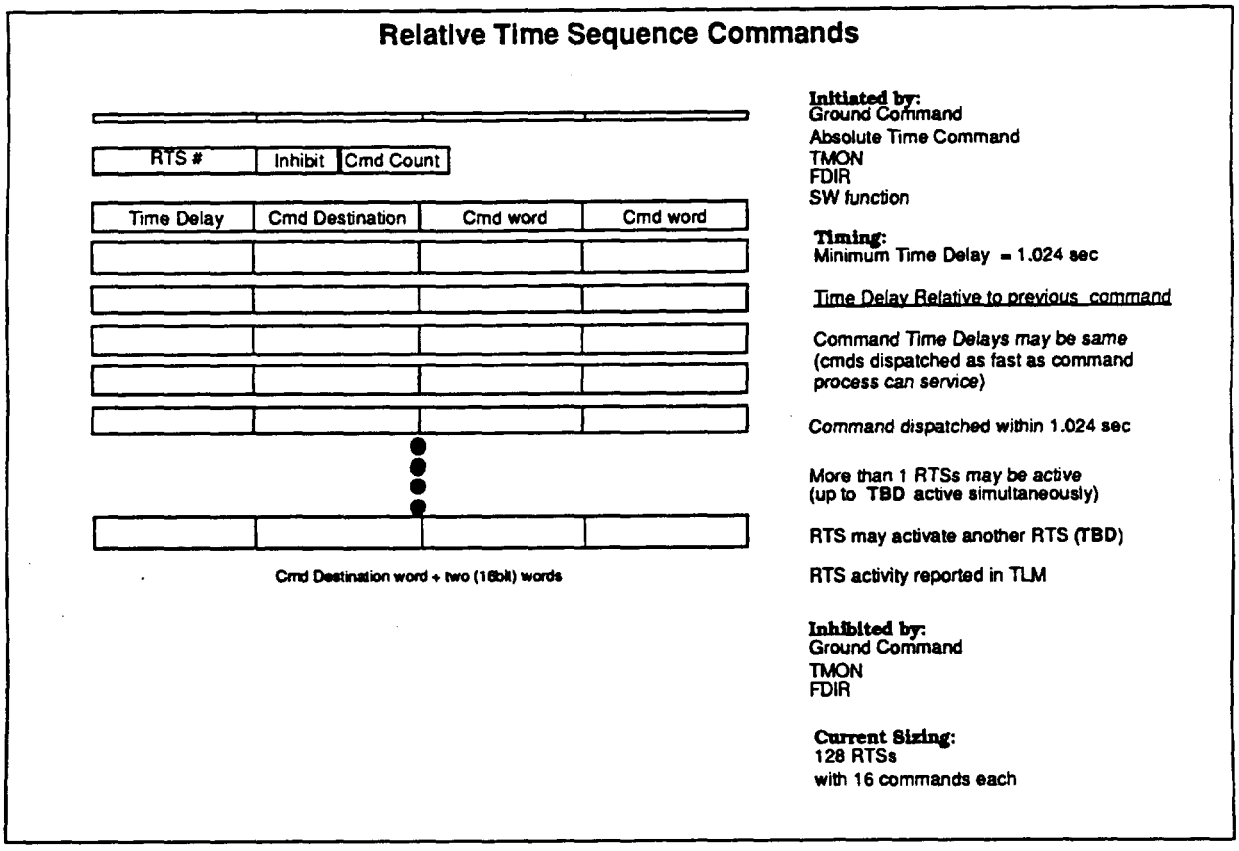

FIGURE 7 RELATIVE TIME COMMAND SEQUENCE STRUCTURE

RTCSs will be loaded into the SCC via ground command and will remain in the SCC memory until removed or over written by ground command. They do not require reloading on a regular basis. RTCSs will be used to perform repetitive functions on-board the Spacecraft (thus reducing the number of stored commands required), and as a command resource for the TMON/FDIR software.

Specialized RTCSs may be loaded, particularly during the Launch through Operational Initialization Mission Phases, for such time-critical operations as solar array release and deployment in order to minimize the need for ground control. These RTCSs will be deleted and/or replaced for normal operations.

Figure 8 depicts RTCS operation.

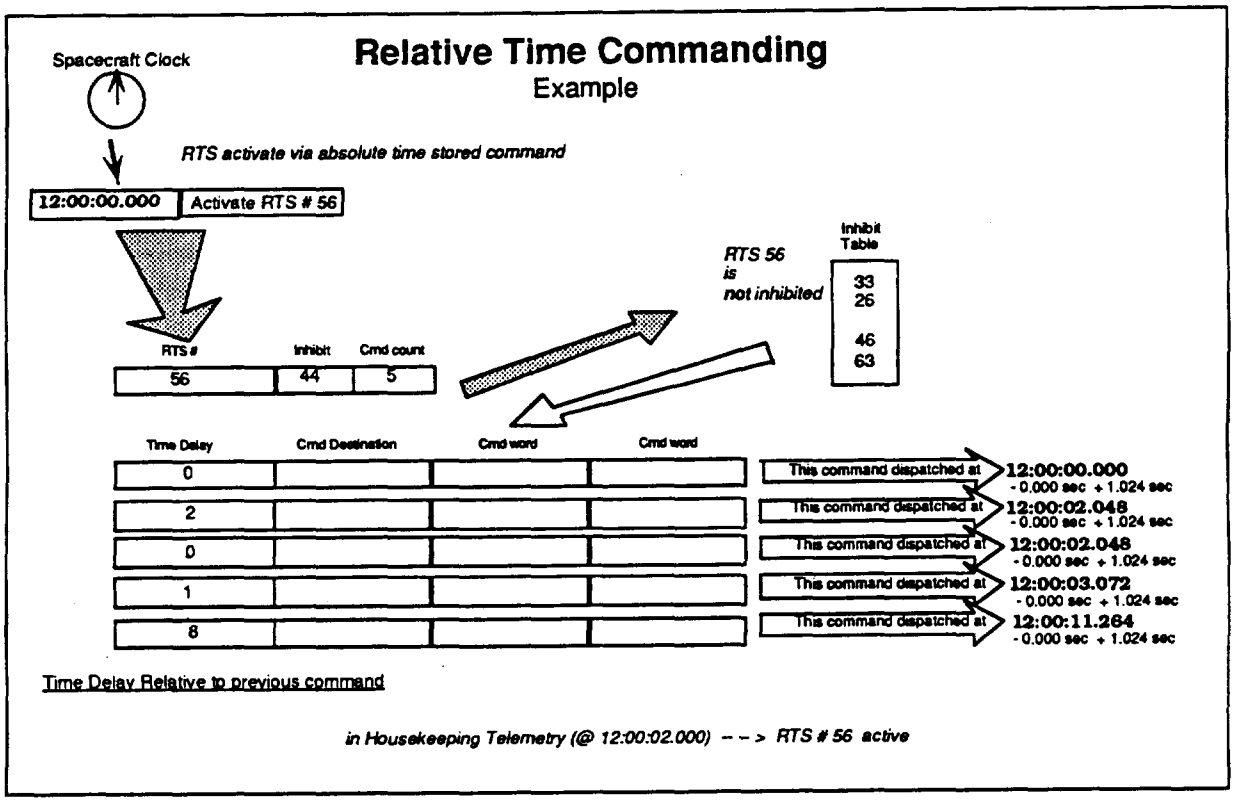

FIGURE 8 RELATIVE TIME COMMAND SEQUENCE OPERATION

4.1.3 Command and Telemetry Interface Unit

The Command and Telemetry Interface Unit (CTIU) is a central component for command and telemetry processing. The CTIU provides the processing and routing of command and telemetry data between the ground system, the Spacecraft Controls Computer and the Spacecraft instruments and housekeeping systems. The CTIU provides the following spacecraft services:

a. Uplink command decoding, processing, and distribution within the spacecraft.

b. Collection and formatting of spacecraft housekeeping and ancillary data in preparation for mass storage or immediate downlink.

c. Spacecraft command, telemetry and closed-loop interfaces to the Spacecraft Controls Computer (SCC).

d. Maintenance and distribution of Spacecraft Time and reference frequencies within the spacecraft including the coordination of Spacecraft Time with ground timing and ranging systems.

There are two redundant CTIUs, only one of which is active at any time and which acts as the Command and Telemetry (C&T) bus controller. The other CTIU is a 'hot standby' and acts as a Remote Terminal (RT). Both CTIUs are always powered when the Spacecraft is powered. Both the active and standby CTIUs can receive and execute uplinked CTIU-specific commands.

The active CTIU receives commands and command data from the ground via the S-Band Transponder, in addition to FDIR commands , closed-loop commands, and Absolute-time and Relative- time stored commands from the Spacecraft Controls Computer. CTIU-specific commands are executed immediately, while SCC-specific commands and command data (SCC table, software or stored command loads) are transferred to the SCC via the CTIU-to-SCC serial interface. The CTIU processes and distributes all other command data (Spacecraft or instrument commands and microprocessor loads) to the appropriate subsystem or instrument via the C&T bus. Since the SCC may be inoperative when the Spacecraft is in safe mode, only the CTIU processes real-time ground commands. Figure 9 illustrates the CTIU command processing flow.

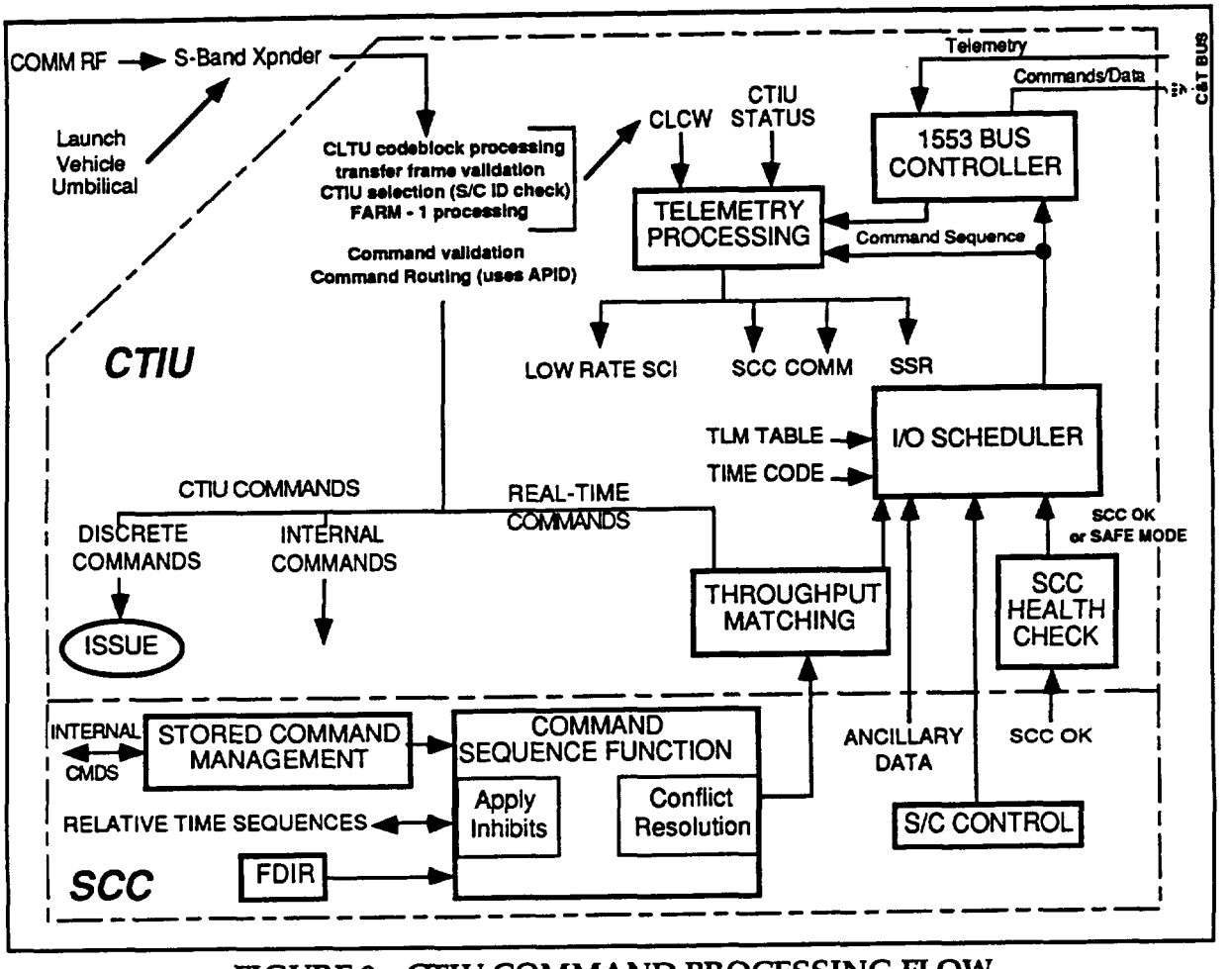

FIGURE 9 CTIU COMMAND PROCESSING FLOW

The CTIU receives Spacecraft subsystem and instrument telemetry via the C&T bus and the Bus Data Units (BDU). The CTIU formats the telemetry data for output to the Solid State Recorder (SSR) and/or the S-Band Transponder. Figure 10 shows the CTIU telemetry processing flow.

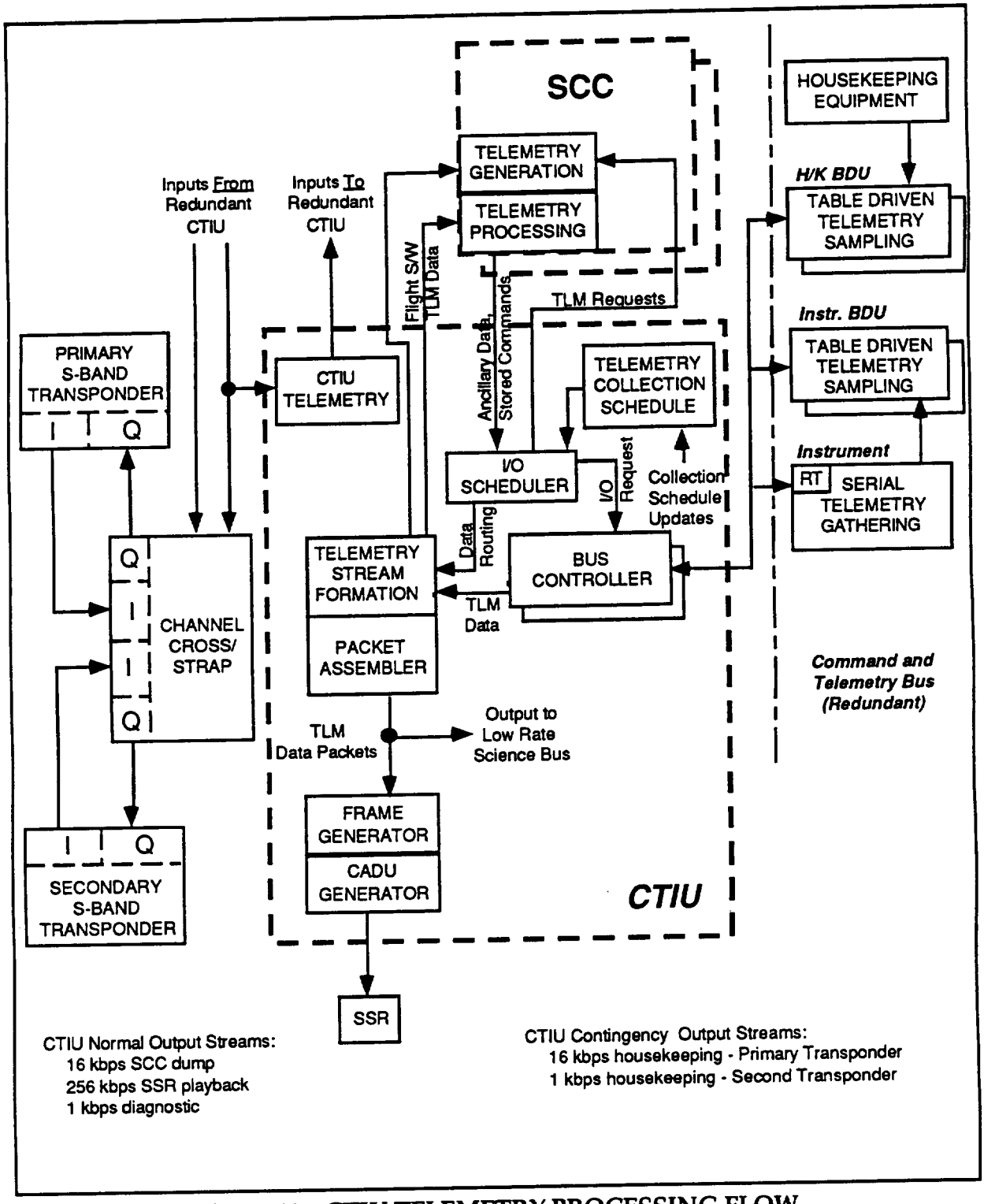

Figure 10 CTIU TELEMETRY PROCESSING FLOW

The active CTIU also provides the Spacecraft master clock and time services. The Master Oscillator (MO) provides the frequency reference signals to the S-Band transponder and CTIU with a frequency accuracy of 1 part in 10^8.

The CTIU propagates the master Spacecraft Clock using the MO frequency reference. The difference between the Spacecraft Clock and Universal Time Code (UTC) is the Clock error, which will grow due to the time-integrated effect of MO frequency errors. The Clock error must be periodically measured, and must be corrected when it approaches 30 milliseconds. The CTIU supports the accurate measurement of the Clock error via the ground based NASA User Spacecraft Clock Calibration System (USCCS). The USCCS is a distributed system using TDRSS White Sands Ground Terminal (WSGT), Network Control Center (NCC), EOS Data and Operations System (EDOS), EOC, and the on-board transponder to determine and correct the Spacecraft Clock error. USCCS software is required in the EOC to process the information and provide the on-board clock bias. The USCCS system currently guarantees calibration accuracy of +/-5 microseconds with respect to UTC. It is anticipated that EOC would request a clock calibration as often as once per day, and will update the Clock bias as necessary to maintain 10 microsecond accuracy.

The Spacecraft Clock may be set and adjusted either by ground command or from SCC-resident software. Both initialization and delta-time (fine adjustment) commands are supported. Clock initialization commands generally cause service interruption in the navigation system and will be used only for system initialization and failure recovery. Delta-time adjustment commands may be executed with a 1 microsecond accuracy and cause minimal disturbance to the system for short periods of time. Delta-time adjustments will be used for clock adjustments when necessary. Clock adjustment and bias update operations will be scheduled to provide minimum perturbation to instrument operations. The EOC FOT will provide coordination of all clock adjustments and bias updates and notification of all users of time-tagged Spacecraft data, as required.

The CTIU also provides two separate time and synchronization services :

a. The Standard Time (ST) service provides moderate accuracy synchronization and Time Of Day (TOD) information in support of Spacecraft housekeeping functions. In general, Spacecraft functions (except for navigation) do not require knowledge of Universal Time Code (UTC), but some functions such as stored command processing do require Time Of Day (TOD) knowledge.

b. The Precise Time (PT) service delivers high accuracy, high precision time data to the science instruments and the on-board navigation function, which have more stringent accuracy requirements. The instruments require an on-board time reference accurate to within 100 microseconds relative to UTC. The desired accuracy for navigation measurement data time tagging is +/- 10 microseconds.

4.1.4 Science Formatting Equipment

The Science Formatting Equipment (SFE) is part of the high-rate data handling system for the Spacecraft. The major function of the SFE is to internally route science data from the SSR, High Rate instrument and Low Rate Science Bus input ports to the appropriate SSR, KSA and DAS modulator output ports. Data routing in the SFE consists of processing the asynchronous packetized input data and transferring the data, in the proper format, to the KSA and/or DAS modulators or to the SSR output (record) port at data rates up to 150 Mbps.

The SFE is fully redundant, including the buses, the bus controllers, and the internally cross-strapped input and output ports. The SFE generates all internally used frequencies.

The SFE input interfaces are defined as follows:

a. The Low Rate Science Bus provides for up to 6 remote terminals including the instruments and the 2 CTIUs. The Low Rate Science Bus will carry telemetry data, ancillary data, and low rate science instrument (CERES and MOPITT) data with a maximum aggregate input data rate of 200 kbps. The SFE will control the Low Rate Science Bus via two Bus Controllers, only one of which will be active at any given time.

b. Each of the SFE High Rate serial input ports will accept variable size packets of science data at up to 50 Mbps from the high rate data Instruments.

c. The SFE will receive SSR playback data on two redundant ports, only one of which will be active at any time. The data rate for the active port will be selectable at 0, 105 or 150 Mbps.

d. The BDU interface provides control of the SFE configuration, operating mode and input/output rates through either SCC or ground generated commands

The SFE output interfaces are as follows:

a. The SFE will output independent data streams to each channel of the redundant KSA and DAS modulators. The KSA modulators each have a single channel, while the DAS modulators each have two independent channels.

b. The SSR record interface consists of unidirectional ports from the SFE to the SSR. Only the SSR Record interface port which is connected to the active SSR controller will be active. The SFE/SSR record data stream consists of Channel Access Data Units (CADUs) at a fixed recording rate of 150 Mbps.

c. The BDU interface provides for the collection of SFE housekeeping telemetry During normal operations the SFE will be configured to output specific data streams, accepting and routing instrument and Low Rate Science Bus data to the SSR and the modulators:

1. The SSR record output will be configured to record all High Rate instrument and Low Rate Science Bus data.

2. The KSA modulator output will be configured for SSR playback via TDRSS, requiring ground commands during each TDRSS contact to turn the SFE playback clock on and off.

3. The Direct Access System (DAS) Direct Broadcast (DB) link will transmit real-time MODIS instrument data.

4. The DAS Direct Downlink (DDL) will transmit ASTER real-time data.

The FOT will monitor the SFE performance during real-time housekeeping telemetry data reception.

The SFE interfaces are shown in Figure 11.

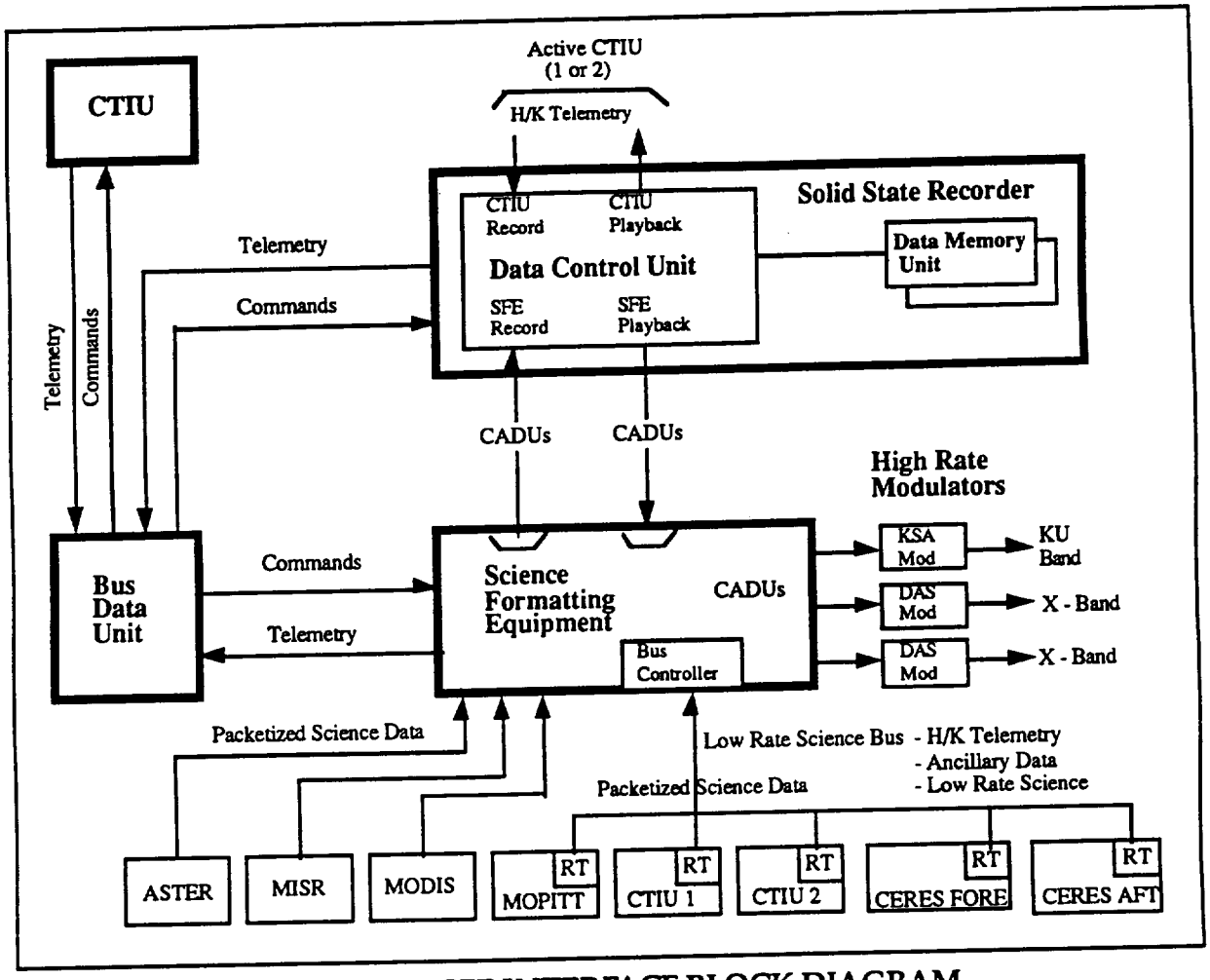

FIGURE 11 SFE INTERFACE BLOCK DIAGRAM

4.1.5 Solid State Recorder

The Solid State Recorder (SSR) is a high capacity data storage device consisting of two redundant Data Control Units (DCUs), and two identical Data Memory Units (DMUs). Figure 12 shows the SSR basic configuration. In operation, only one DCU is active at a given time. The DCU contains the record/playback processing, and command and telemetry processing. A part of the 2.4 Gbit DCU memory (357 Mbit) is allocated to housekeeping telemetry data storage. The total 140 Gbit memory capacity is provided by the two DMUs plus the local memory contained in the DCU. The SSR may be commanded into a Low Power Mode in order to provide the CTIU interfaces and the associated record/playback functions while minimizing the SSR power dissipation. In the Low Power Mode, only the active DMU and its local memory is powered and housekeeping telemetry record and playback via the CTIU is available. Low Power Mode is entered when the SSR is powered up and may be entered by command from the Science Mode.

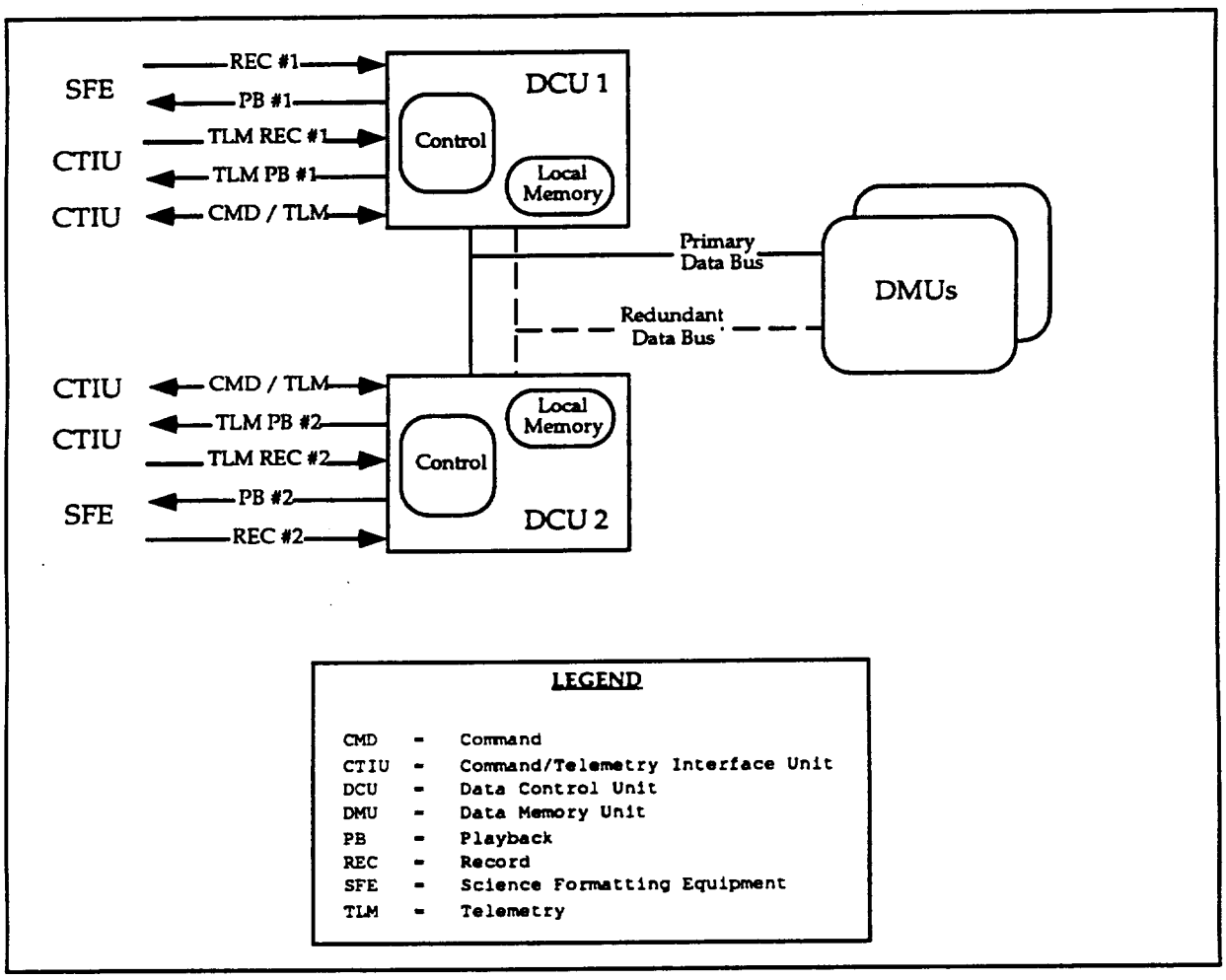

Figure 12 SSR Basic Configuration

The SSR is capable of simultaneously recording and playing back science data via interfaces with the Science Formatting Equipment (SFE). Concurrently the SSR is capable of recording or playing back housekeeping telemetry data via an interface with the CTIU. The SFE and CTIU interfaces operate independently of each other.

The SSR is capable of recording science data from the SFE at a data rate of 150 Mbps. The SSR will sort and record spacecraft science data in separate logical data buffers sorted according to the Virtual Channel Identifier (VCID) of the data source. Up to eight science data storage areas [circular first in first out (FIFO)] buffers may be provided, each accepting data from a single or multiple VCIDs. The four ASTER VCIDs may be directed to a single data buffer. Figure 13 illustrates the SSR science data buffer utilization. This capability will provide for selective playback of the science data. The proposed buffer sizes will accommodate at least one full orbit of data when instruments are operated in their predicted profiles. The current proposed buffer sizes are shown in Table II. Each SSR buffer may be commanded to allow the oldest data to be overwritten or to protect the data (overwrite inhibited).

Table II Proposed SSR Buffer Sizing

Data Type	Buffer Size	Remarks
Housekeeping	357 Mbits	Four Orbits of data
Low Rate Science	357 Mbits	105 minutes of data
MODIS	44.8 Gbits	60 mins day rate, 50 mins night rate
MISR	24.9 Gbits	67 mins of data. > 1 orbit nominal ops
ASTER	69.6 Gbits	12.9 mins at 90 Mbps.

The SSR is capable of playing back recorded science data at a maximum data rate of 150 Mbps. The SSR input and output data streams consist of integral numbers of 8192 bit blocks which are referred to as Channel Access Data Units (CADUs). The first requested CADU for each requested playback shall be preceded by the last 100 to 256 CADUs played back from this buffer during the previous playback. The SSR will not erase science data during playback, but the oldest data will be overwritten when a new recording session occurs directly over previously recorded data. The science data output stream from each buffer will be in the same time order in which it was recorded. The SSR is capable of playing back any ground-specified portion of the stored science data.

The SSR is capable of recording and playing back 16 Kbps Spacecraft housekeeping telemetry data via cross-strapped interfaces to the Spacecraft CTIUs. The housekeeping input and output data streams consist of housekeeping telemetry CADUs which are recorded in and played back from the 357 Mbit circular FIFO DCU buffer. The SSR can record or playback the housekeeping data concurrently with the science data playback, but cannot record and playback housekeeping data simultaneously. After four orbits the DCU buffer will be filled, and the SSR will overwrite the housekeeping data.

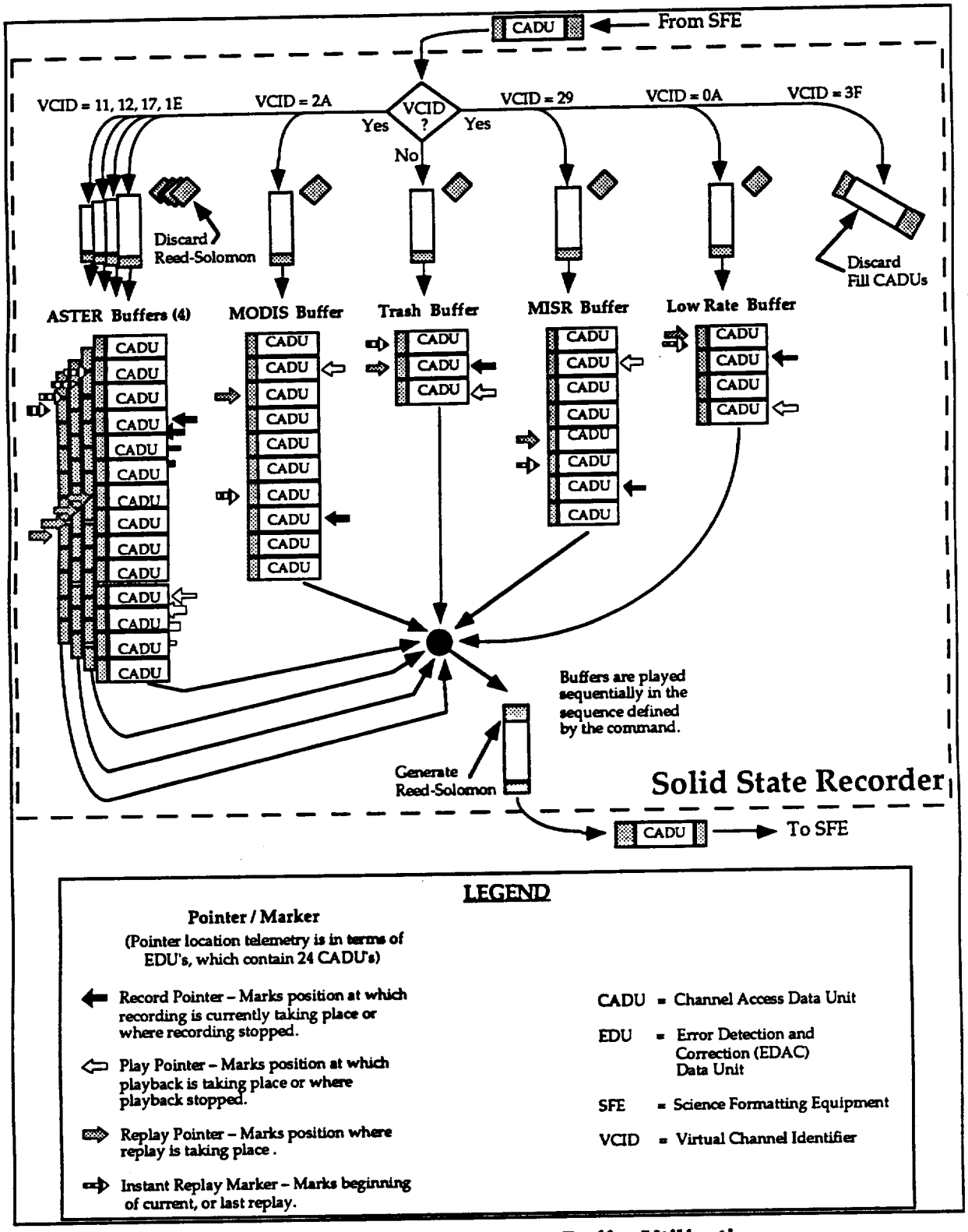

Figure 13 SSR Science Data Buffer Utilization

See Figure 14 for a typical operating scenario.

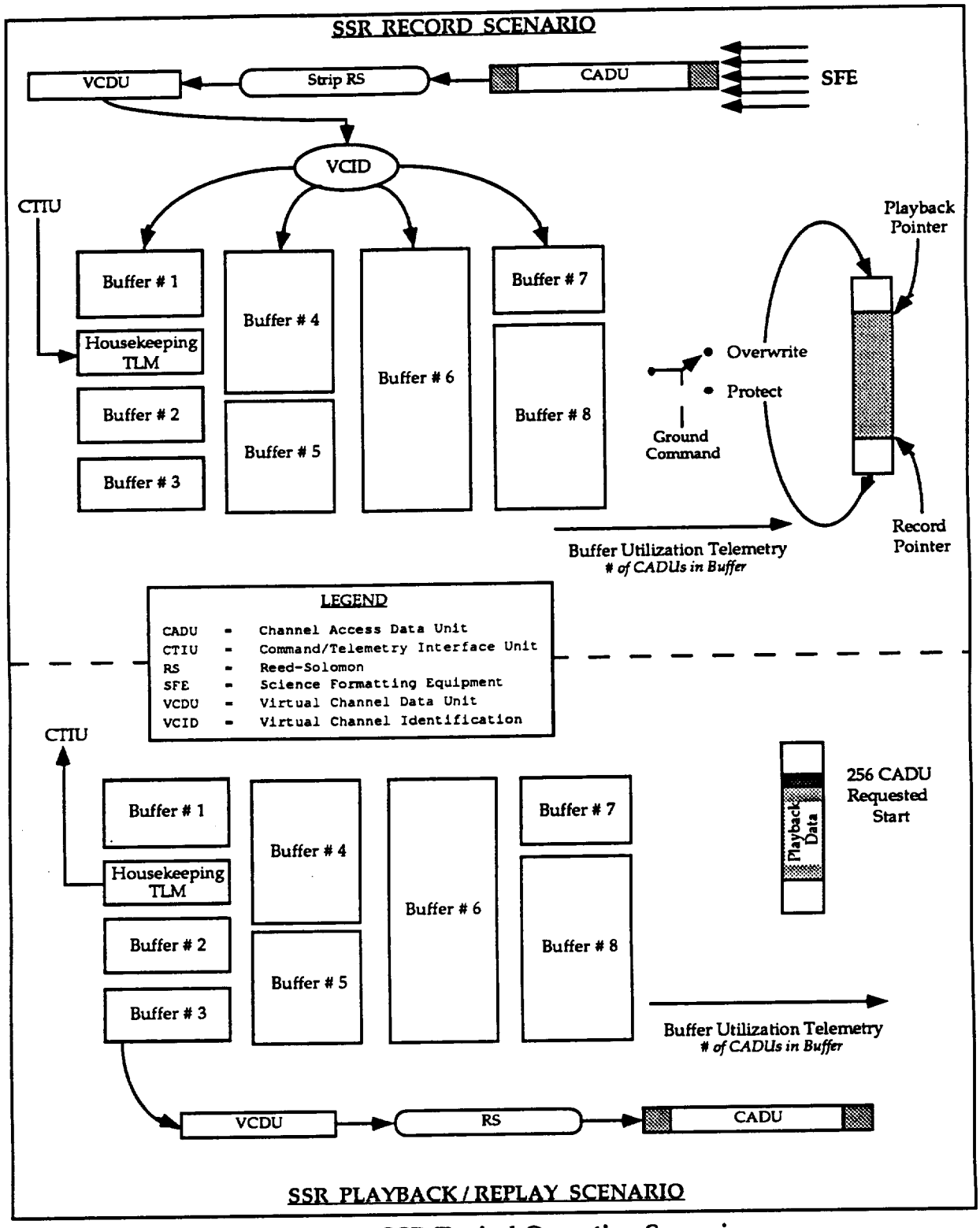

Figure 14 SSR Typical Operating Scenario

The SSR plays back stored housekeeping data at a ground-commanded rate of either 256 Kbps (via TDRSS) or 512 Kbps (via DSN/GN/WOTS). The output data stream consists of integral numbers of CADUs. The first requested CADU for each playback will be preceded by the last 100 to 256 CADUs played back from the buffer during the previous playback. The SSR will not erase telemetry data during playback, but the data will be overwritten when a new record segment occurs directly over previously recorded data regardless of the playback status of the previously recorded data. The telemetry data output stream will be in the same time order in which it was recorded.

The SSR telemetry will provide status information for each buffer which will be evaluated by the EOC to assure complete data retrieval. The status information will indicate:

a. The locations of the beginning of data that has not been dumped
b. The current location of the record pointer
c. The location of the dump pointer.

The EOC will track the instrument science and the housekeeping telemetry data times, the data position in the SSR memory, and the playback status of recorded data in order to ensure no loss of either science or housekeeping data.

Normal SSR operation will be to record all science data, with the SSR always in Record mode and the SSR data input being determined by the instrument operations. The high rate instruments and Low Rate Science Bus output will be recorded in separate buffers. The operating plan for retrieving science data from the SSR is to play back the data during two nominal 10 minute TDRSS contacts during each EOS-AM orbit. At the data rates available, a full SSR (all buffers full) would take approximately 18 minutes to dump completely. Since the peak data generation of the instrument set occurs during the daylight observations, and six to eight minutes of SSR playback will occur during each ten minute TDRSS contact, all data contained on the SSR may not be retrievable during a single 10 minute contact.

TDRSS contact spacing and location will be influenced by the Spacecraft/TDRS/Earth geometry and the TDRSS scheduling requirements, but equally spaced contacts (approximately 40 minutes apart) are the current plan.

SSR operations will be controlled by a combination of stored and real-time commands. Science instrument data start/stop operations will be initiated by stored commands generated by the EOC scheduling function, while memory configuration, mode change, playback and communication link configuration commands will be via real-time commands.

Nominal SSR operations (see Figure 15 for the SSR operation profile) will be as follows:

a. The housekeeping telemetry data will be continuously recorded in the DCU memory, overwriting the housekeeping buffer after approximately 3.5 orbits. The housekeeping buffer will be played back only in the event of a Spacecraft anomaly or to provide specific data for ground analysis.

b. The SSR will continuously record CERES, MOPITT, ancillary and telemetry data from the Low Rate Science Bus via the SFE into the Low Rate buffer. This data will continue to be recorded even while the SSR is being played back.

c. The SSR will record science data from the instruments via the SFE into their respective buffers. The ASTER data may be recorded into one buffer or may be sorted by VCID into four different buffers.Instrument data will continue to be recorded even if the SSR is being played back during the record period.

d. The SSR science data will be played back during each scheduled 10 minute TDRSS contact (twice per orbit). The science data buffers will be played back in sequence, oldest data first, such that sufficient space is available in each buffer to accommodate the science data scheduled to be recorded before the next TDRSS contact.

e. The ASTER and MISR buffers will be completely played back if possible.

f. The LOW Rate and MODIS buffers will nominally never be completely emptied since the instruments will be continuously producing science data. Playing back older science data while simultaneously recording new science data will be the normal operational configuration.

g. SSR playback start and stop will be controlled by ground command.

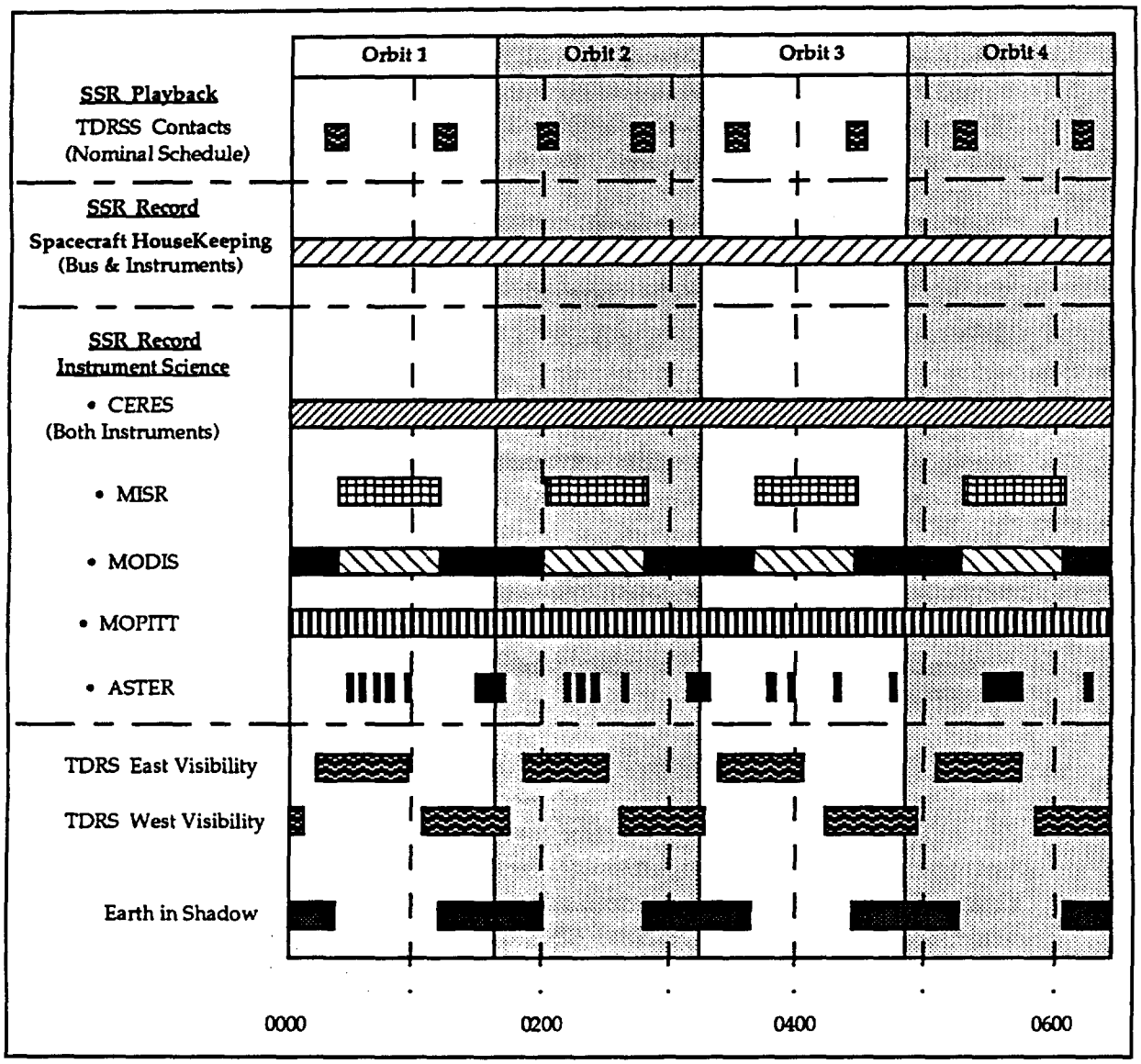

Figure 15 SSR Operation Profile

4.1.6 Bus Data Unit

Bus Data Unit(s) (BDU) provide standard command and telemetry interfaces between the Spacecraft housekeeping components and instruments. The BDU is an internally redundant device.

The BDUs collect, reformat and transmit housekeeping and instrument telemetry data to the active CTIU via the C&T bus. The BDU provides analog/digital signal conversion and conditioning.

The BDUs also receive command data from the active CTIU via the C&T bus, processing and issuing the commands. BDUs may issue relay drive, logic pulse or serial commands.

4.1.7 Initial Spacecraft Operation

The Spacecraft command and telemetry systems are active during all Spacecraft mission phases, and are fully available to support initial activation and subsequent operation of MOPITT.

The Spacecraft operational orbit is acquired during the Spacecraft Operational Initialization Phase. A complete housekeeping and instrument equipment checkout is performed and a fully operational system state is established. The EOC activities are augmented by Spacecraft engineering support from the contractor's facility and TBD Instrument Team representatives.

Figure 16 shows a typical time-line representation of the activities during the Operational Initialization Phase.

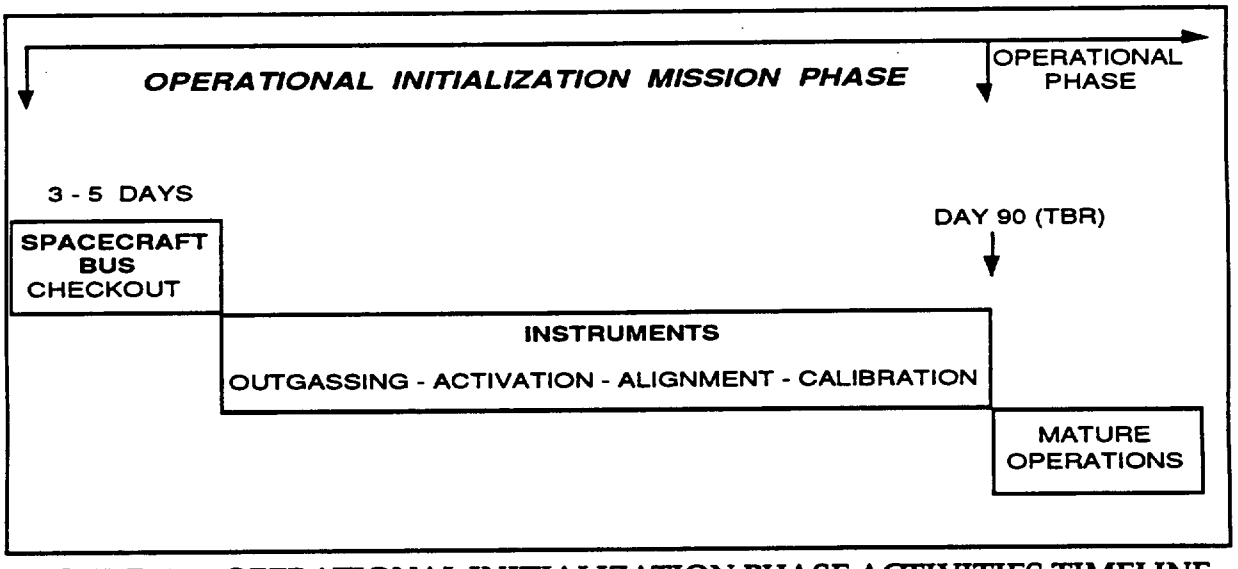

FIGURE 16 OPERATIONAL INITIALIZATION PHASE ACTIVITIES TIMELINE

4.1.8 Spacecraft Maneuver Operations

Throughout the EOS-AM mission, periodic orbit maintenance maneuvers are executed by the Spacecraft to maintain the operational (705 km) orbit requirements. The frequency of orbit adjusts is TBD. Each maneuver is planned and scheduled in advance of execution. Orbit maintenance maneuvers are not enabled without providing an opportunity for appropriate instrument reconfiguration, except in Spacecraft emergency situations. The Propulsion Subsystem provides impulse for orbit maintenance.

The Spacecraft is monitored by the Flight Dynamics Facility (FDF) through TDRSS ranging, and by the EOC, which uses TDRSS Onboard Navigation System (TONS) determinations. When required, orbital adjust calculations are performed to determine the direction and length of the burn, and the required start time. These calculations are used to generate stored commands. Upon completion of the burn, Spacecraft orbital parameters are monitored to determine the need for further correction. Figure 17 summarizes the steps described in paragraph 4.1.8

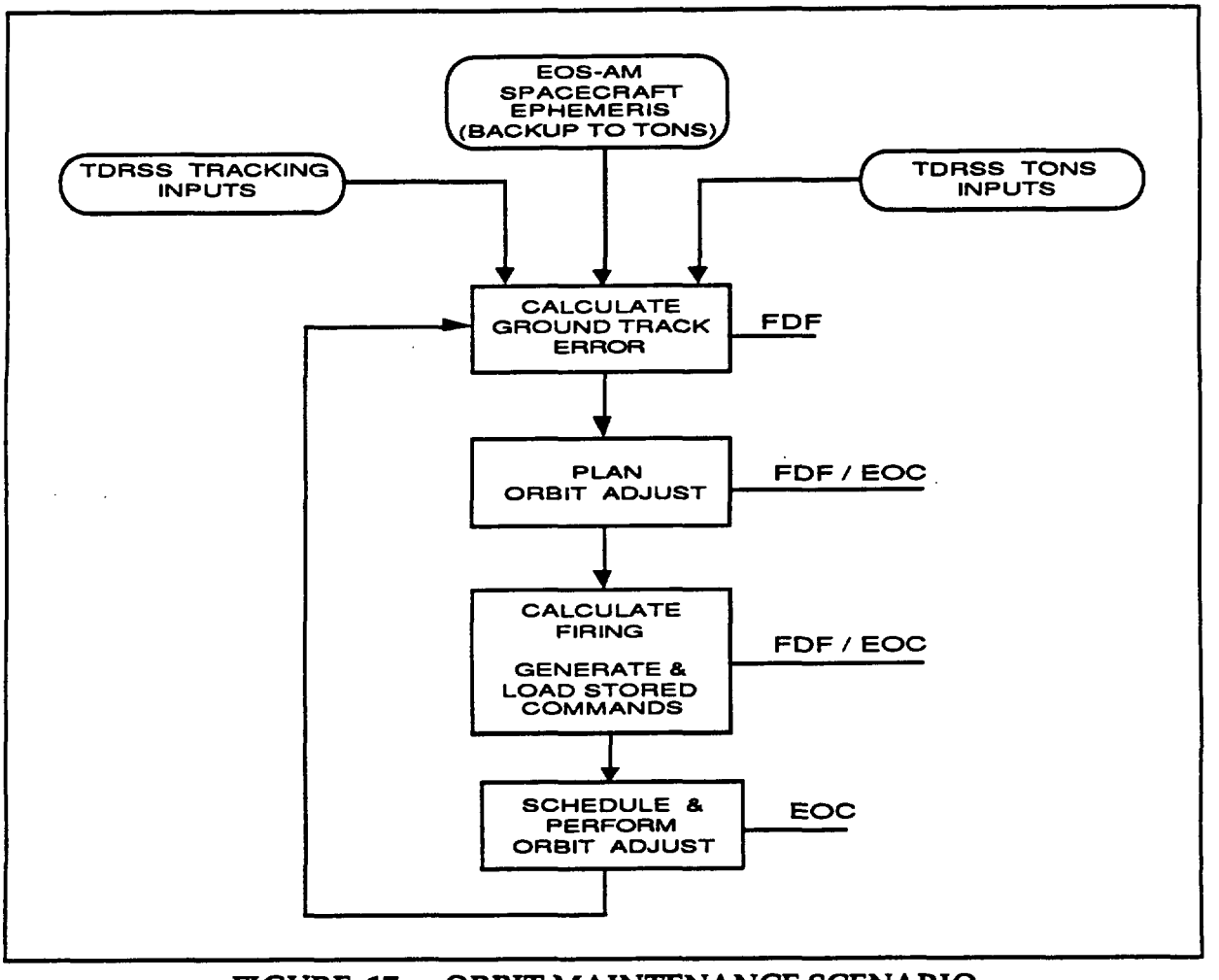

FIGURE 17 ORBIT MAINTENANCE SCENARIO

4.1.9 Autonomous Operations

The Spacecraft Fault Detection, Isolation and Recovery (FDIR) System protects the Spacecraft Bus and instruments in the event of survival-critical failures that occur in the absence of ground command and control. To accomplish this, the FDIR system autonomously switches the Spacecraft's configuration (equipment configuration and operating mode) in response to predefined survival-critical faults to isolate faults and prevent propagation. The FDIR system resides mostly in the SCC. This system provides autonomous action only if the fault detected is time critical to Spacecraft survival.

The major Spacecraft functions assessed by the on-board FDIR system requires a Flight Operations Team response in the event of function loss. The Flight Operations Team takes predefined actions in the event a FDIR event is detected.

The Spacecraft Safe Mode or Survival Mode is entered only after unsafe conditions or pending unsafe conditions are detected by the Flight Operations Team or the Spacecraft on-board FDIR system.

The Spacecraft may autonomously transfer into Safe Mode which may involve a degraded Spacecraft operation, and may also involve interruption of stored-command execution (only in the case of SCC or CTIU/C&T Bus loss).

Safe Mode or Survival Mode recovery occurs in predefined ground command / control steps only after detailed analysis and Spacecraft subsystems checkout and Operational Readiness verification.

4.1.10 Spacecraft Bus Operating Modes

The Spacecraft Bus operating modes are defined by the minimum functional and performance capabilities that are required to satisfy mission conditions and constraints.

Transition between a primary mode and a back-up mode is initiated by either Ground Command (stored or real-time) or on-board FDIR logic. The on-board Spacecraft Bus computer [SCC] autonomously initiates a transition from a primary mode (ie; Science Mode) to a back-up mode (ie; Survival Mode) following violation of preselected FDIR criteria. Exit from a back-up mode to a functionally more capable mode is by ground command only.

Figure 18 shows the Spacecraft operating modes available during each mission phase and their status (primary availability or back-up availability).

SPACECRAFT SYSTEM MODES	EOS-AM1 SPACECRAFT MISSION PHASES						
	Pre-Launch	Launch / Ascent	Orbit Acquisition Initialization	Orbit Acquisition	Operational Initialization	Operational	End of Mission
Ground Test Mode	P	B					
Launch/Ascent Mode		P	P				
Standby Mode			P	P	P	B	
Science Mode					P	P	
Delta-V Mode				P	P	P	
Survival Mode		B	B	B	B	B	P
Safe Mode		B	B	B	B	B	B

LEGEND
P = PRIMARY MODE
B = BACKUP MODE

FIGURE 18 SPACECRAFT OPERATING MODES AVAILABILITY

The Spacecraft Bus system operating modes are:

a. **Ground Test Mode.** -- The Ground Test Mode is a non-flight mode, used by the Launch Operations Team, in the Pre-Launch Phase following Spacecraft to Launch Vehicle integration. During the Ground Test Mode, the Spacecraft Bus undergoes comprehensive performance testing. Instrument science will not be tested during this mode but the integrity of instrument interfaces are verified. No deployments will be performed during the pre-launch tests.

   The Spacecraft is essentially in a check-out state receiving power from the Launch Vehicle T - minus zero umbilical, at the launch pad. The Spacecraft readiness for launch is established. The batteries are charged and equipment powered, as required, for low rate telemetry and commanding. Telemetry is provided to the Ground Support Equipment via the T - minus zero umbilical Spacecraft 1 kbps health and safety telemetry will be multiplexed with the Launch Vehicle telemetry and made available via the Launch Vehicle telemetry and antenna systems after Spacecraft disconnect from the T - minus zero umbilical. The software and data tables are loaded with the appropriate parameters for Orbit Acquisition Initialization and Orbit Acquisition Phase activities.

   The Ground Test Mode is entered by ground command. The Ground Test Mode is exited into the Launch/Ascent Mode for the Launch Phase upon the Spacecraft going to internal power.

b. **Launch/Ascent Mode** – The Launch/Ascent Mode is a primary mode in both the Launch/Ascent and Orbit Acquisition Initialization Phases. The instruments are powered off with survival heaters enabled. Housekeeping equipment is powered as required for low-rate commanding and telemetry, with survival and operational heaters enabled.

The Flight Operations Team will monitor the Spacecraft telemetry received via the launch vehicle when it becomes available. No direct Flight Operations Team command/control involvement is necessary during the Launch and Ascent, assuming nominal Spacecraft conditions and activities.

Upon detection of separation from the launch vehicle, preprogrammed logic will be activated to perform major early mission activities, including:

- An attitude maneuver to obtain an Earth-oriented attitude
- Deployment of the solar array to support the bus load and begin battery recharge
- Establishment of an S–band command/telemetry link, primarily with TDRS via the omnis
- Deployment of the High Gain Antenna
- Enable the FDIR algorithms necessary for autonomous transition to Survival Mode or Safe Mode in the event of predefined failures. These algorithms will remain enabled throughout the subsequent mission phases.

Launch/Ascent preprogrammed activities will, as a backup, accept real-time ground commanded initiation, provided that a communication link with the ground has been established.

Nominally, exit from the Launch/Ascent Mode to Standby Mode will be ground commanded when the major early mission events (e.g. earth acquisition, energy balance, High Gain Antenna deployment) have been successfully completed. If an anomaly occurs after the Spacecraft has separated from the launch vehicle, the transition from the Launch/Ascent Mode to either the Survival Mode or Safe Mode may be commanded either by autonomous on-board logic or by ground command.

c. **Standby Mode** – Standby Mode is used during Spacecraft subsystem checkout or as a back-up to the Science Mode. Although instrument science is not supported in this mode, instrument housekeeping functions can remain operational. Services provided during the Standby Mode include:

- Full power is provided. The Spacecraft Bus maintains a positive energy balance. The Spacecraft solar array tracks the sun.
- Thermal control is provided.
- Nominal S-Band Spacecraft Bus and instrument housekeeping (16 Kb) / health and safety (1 Kb) telemetry are provided.
- Commands are processed and distributed.
- Spacecraft housekeeping, health, and safety data storage and retrieval are operational.
- The SCC is operational.
- The Spacecraft Guidance and Navigation functions operate nominally, providing Earth-pointing (precision, if transition is from Science Mode). The TONS system is operational with the Spacecraft ephemeris loaded as back-up.

d. **Science Mode** -- The Science Mode is the primary mode used during the Operational mission phase and during on-orbit instrument checkout. During Science Mode the Spacecraft Bus provides the full complement of resources. Services provided during the Science Mode include:

- Full power is provided. The spacecraft Bus maintains a positive energy balance. The solar array tracks the sun.
- S-Band Spacecraft Bus and instrument housekeeping / health and safety telemetry are provided.
- Science data transmission (real-time or playback) capability on the K-Band and Direct Access System are provided.
- Ancillary data and time-tagged navigational data functions are provided.
- Commands are processed and distributed.
- Spacecraft high rate and low rate data storage and retrieval are operational.
- The SCC is operational including High Gain Antenna pointing and control.

- The Spacecraft Guidance and Navigation functions operate nominally, providing precision Earth-pointing. The TONS system is operational with the Spacecraft ephemeris loaded as back-up.

e. **Delta-V Mode** -- The Delta-V Mode is a propulsive mode used to raise Spacecraft altitude from the injection orbit to mission operational altitude, circularize the mission orbit and to provide periodic correction to maintain the mission orbit. At a minimum, in the Delta-V Mode, the Spacecraft can be at survival power levels, and at a maximum, the Spacecraft can be at full power.

Best case: (such as planned Delta-V during Operational Phase)

- Full power is provided.
- The spacecraft Bus maintains a positive energy balance.
- The solar array tracks the sun with nominal rotation.
- Science data transmission (real-time or playback) capability on the K-Band and Direct Access System could be provided; however, fine pointing and jitter control are not supported.
- Ancillary data and time-tagged navigational data functions are provided.
- Spacecraft high rate data storage and retrieval could be operational.

Worst case: (such as during Orbit Acquisition Phase)

- Survival power (degraded capability).
- Commands are processed and distributed.
- S-Band Spacecraft Bus and instrument housekeeping / health and safety telemetry are provided.
- Spacecraft low rate data storage and retrieval are operational.
- The SCC is operational including High Gain Antenna pointing and control.
- The Spacecraft Guidance and Navigation functions operate providing Earth-pointing; however, fine pointing and jitter control are not supported. The TONS system is operational with the Spacecraft ephemeris loaded as back-up.

f. **Survival Mode** -- The Survival Mode is a minimal power or power critical mode in which only essential Spacecraft functions (i.e., low-rate commanding and telemetry, instrument survival heaters) are supported. Transition into

the Survival Mode causes non-essential housekeeping equipment to power-down.

Instruments are commanded to take action to protect themselves and establish a minimal power configuration. The Survival Mode is the primary mode for the Launch/Ascent, Orbit Acquisition Initialization, Orbit Acquisition, and End of Mission Phases. Services provided during the Survival Mode include:

- The solar array tracks the sun.
- Commands are processed and distributed.
- S-Band Spacecraft Bus and instrument housekeeping / health and safety telemetry are provided.
- Spacecraft critical health and safety data storage and retrieval are operational.
- The SCC is operational. (Best case)
- The Spacecraft Guidance and Navigation functions operate nominally, providing Earth-pointing, best case; Sun pointing worst case. The TONS system is operational with the Spacecraft ephemeris loaded as back-up.

g. **Safe Mode** -- The Safe Mode is a state in which the Spacecraft Bus is capable of operating partially or completely independent of the SCC. Specifically, the Spacecraft Bus operates in the Safe Mode as long as the Attitude Control Electronics (ACE) performs the attitude control functions.

Safe Mode can be entered via ground command by the Flight Operations Team. Safe Mode is entered autonomously under two circumstances. The first is the loss of SCC - I'm OK - signal and the second is due to GN&C FDIR action. Autonomous Spacecraft entrance into the Safe Mode due to GN&C FDIR occurs if the GN&C FDIR detects an attitude error beyond a given threshold and attitude control is switched to the ACE. Services provided during the Safe Mode include:

Best case:

- Full power is provided The spacecraft Bus maintains a positive energy balance. The solar array tracks the sun with nominal rotation.

- Commands are processed and distributed.
- S-Band Spacecraft Bus and instrument housekeeping / health and safety telemetry are provided.
- Science data transmission (real-time or playback) capability on the K-Band and Direct Access System is provided.
- Ancillary data and time-tagged navigational data functions are provided.
- Spacecraft low rate and high rate data storage and retrieval are operational.
- The SCC is operational.
- The Spacecraft Guidance and Navigation functions operate safely Earth pointing with degraded pointing accuracy. The TONS system is operational with the Spacecraft ephemeris loaded as back-up.
- Earth Pointing
- Thruster based attitude control.

Worst case:

- Power for survival equipment and instruments
- No command / telemetry until the FOT re-establishes these functions [Command and Telemetry Interface Unit (CTIU) failure scenario].
- SCC non-functional. No SCC services.
- Sun pointing

4.1.11 Spacecraft Bus - Instrument Operating Modes Relationships

The Spacecraft Bus operating modes and MOPITT operating modes are directly interrelated. The Spacecraft Bus provides predefined services and resources for each of its operating modes. MOPITT operates to predefined tasks for each of its operating modes.

Table III relates MOPITT operating modes and the Spacecraft Bus operating modes.

TABLE III
SPACECRAFT BUS AND MOPITT OPERATING MODES

SPACECRAFT SYSTEM MODE	MOPITT INSTRUMENT MODE				
	Off	Emergency	Launch	Idle	Ready
Ground Test	X		X		
Launch/Ascent			X		
Standby				X	
Science				X	X
Delta-V					X
Survival		X			
Safe				X	

LEGEND

X = Normal Configuration

4.2 Ground System

The EOS ground system provides the earth sciences community with a variety of data products obtained from the Earth Observing System spacecrafts. Data archiving, distribution and user interface capabilities are provided. The ground system also supports the command and control of the EOS-AM Spacecraft.

EOS-AM flight operations utilizes several NASA institutional support facilities along with dedicated EOS facilities. These include the following:

4.2.1 Space Network

The Space Network (SN) is the primary data transport system for relaying data between the EOS-AM Spacecraft and the ground, and provides communication resource scheduling support to EOSDIS. The SN elements together provide the communications path between the Spacecraft communications subsystem and the EOS Data and Operations System (EDOS). The SN has two parts:

a. **The Tracking and Data Relay Satellite System (TDRSS).** TDRSS comprises the Tracking and Data Relay Satellites [TDRS(s)], the White Sands Ground Terminal (WSGT), and the Second TDRS Ground Terminal (STGT), also located at White Sands.

b. **The Network Control Center (NCC) at the Goddard Space Flight Center (GSFC).** The NCC is the operations center for all SN activities. It provides operational management of all elements of the SN and is responsible for all scheduling activities for the TDRS(s) and ground terminals. The EOC interfaces with NCC for scheduling SN resources. The NCC implements operations, executes schedules, and performs link monitoring and fault isolation.

Figure 19 depicts a top level view of the Space Network scheduling process.

The nominal plan for TDRSS support calls for two contacts 10 minutes in length, per EOS-AM orbit. The requirement for support is submitted with the specific timing of support services left to be scheduled by the NCC. A forecast schedule of TDRSS support intervals is released by the NCC approximately one-two weeks beforehand. Contingency/emergency support arrangements can be made with 10 minutes advance notice.

Figure 20 shows a timeline of Space Network and EOC scheduling activities during a normal forecast scheduling period and an active scheduling period.

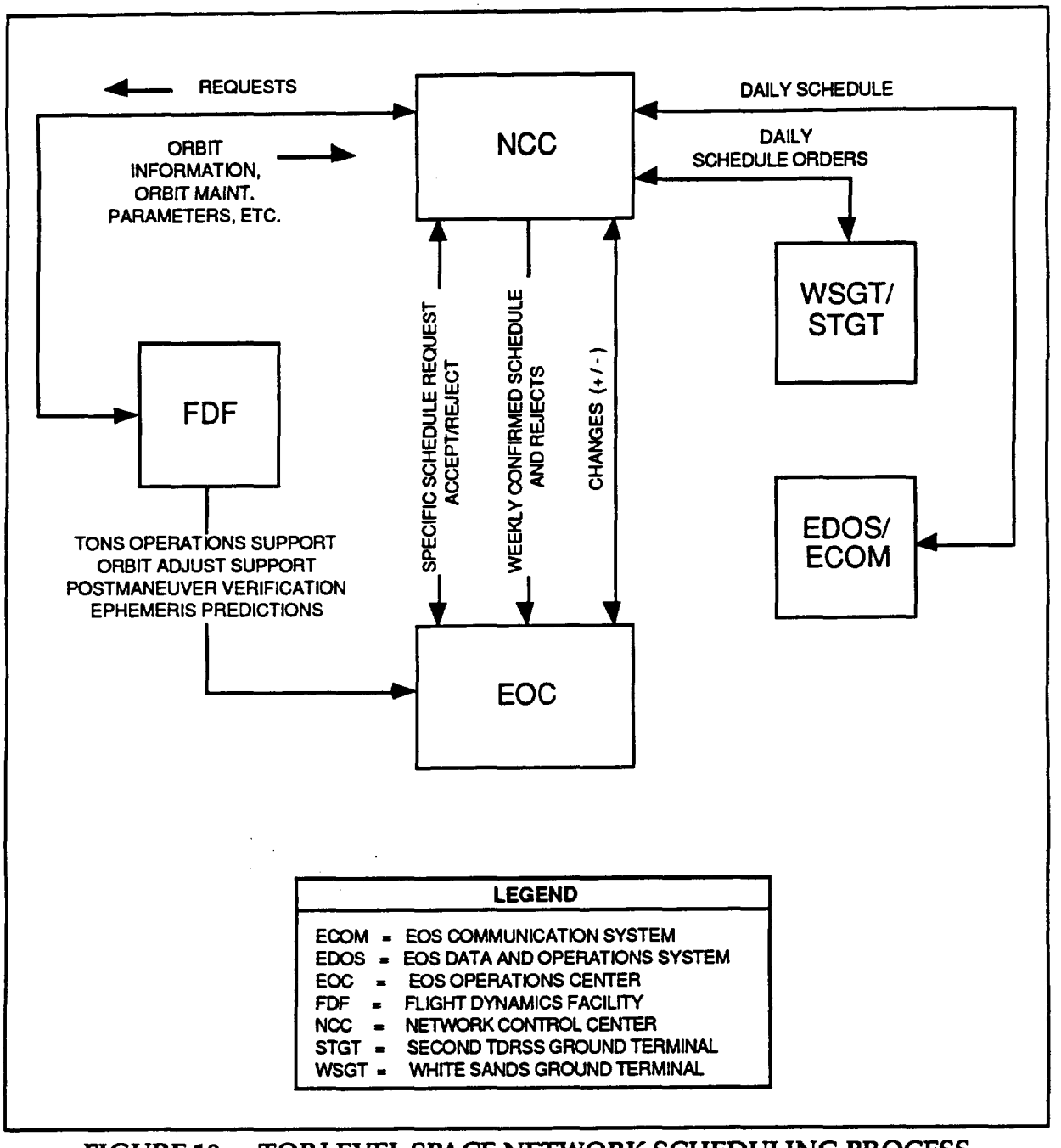

FIGURE 19 TOP LEVEL SPACE NETWORK SCHEDULING PROCESS

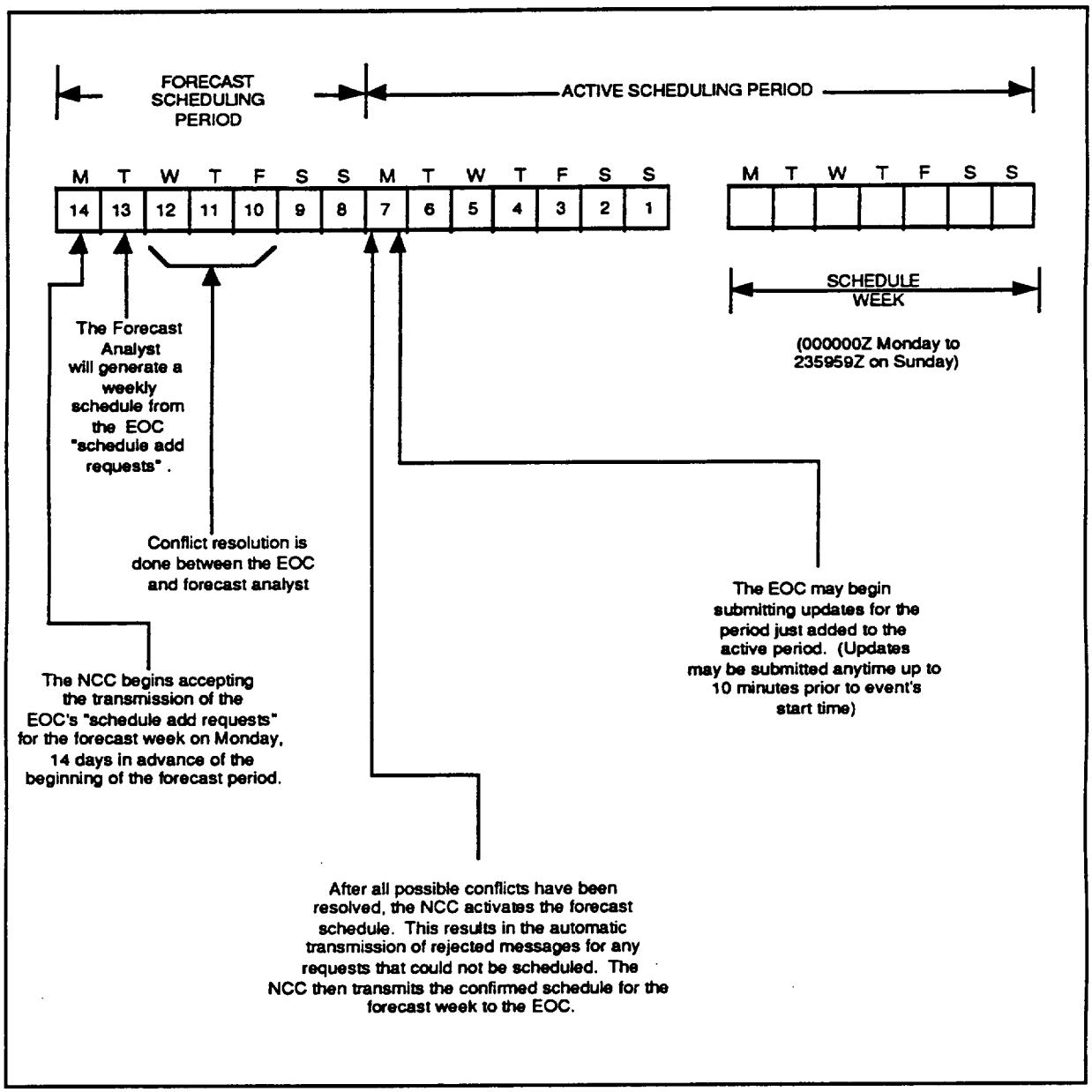

FIGURE 20 EOC / SPACE NETWORK SCHEDULING TIMELINE

4.2.2 Flight Dynamics Facility

The Flight Dynamics Facility (FDF) is an institutional facility located at GSFC that provides orbit, attitude, and navigation computational services in support of flight projects. Prelaunch services include mission design analysis, trajectory analysis, sensor analysis, and operations planning. Operational support services include orbit and attitude determination, anomaly resolution, orbit adjustment planning and maneuver support, sensor calibration, post mission velocity analysis, and generation of planning and scheduling data products.

The FDF provides operational support to the EOS-AM Spacecraft. The FDF interacts directly with the EOC to provide TONS operations support, orbit adjustment support, and post maneuver verification of spacecraft parameters. In addition, FDF provides the EOC with TDRS and EOS-AM Spacecraft ephemeris loads and predictions for planning and scheduling support.

The FDF routinely provides predicted orbit information for use in flight operations and definitive data for scientific data processing (when requested). The FDF generates planning aid data to support both long and short term operational planning activities and for use in command generation processing. Performance monitoring data is extracted from planning aid data sets, or generated separately; this data is provided to the EOC for use in verifying proper Spacecraft operation during real-time contact intervals. The FDF operates seven days per week to generate predictive orbit data for use in daily command generation processing. The short-term planning aid data used in daily planning activities is generated/updated TBD, while long term planning aid generation is scheduled to support specific long term planning activities whenever they occur.

4.2.3 NASA Communication Network

Together with the EOS Communications Network (ECOM) (Section 4.2.6.2), NASA Communication Network (NASCOM) provides the set of circuits, switching, and terminal facilities for operational telecommunications support of the EOS project. Both networks provide a high level of security for the command, telemetry, and other information directly related to the spacecraft operations that they support. NASCOM provides the communications between the Earth Science Data Information System (ESDIS) and the NCC (and possibly other institutional systems), either directly or via ECOM gateways.

4.2.4 Science Support Networks

Other NASA networks that support EOS science communications include the Program Support Communications Network (PSCN) and the NASA Science Internet (NSI):

a. The PSCN provides programmatic and administrative data communication services between NASA Headquarters, NASA centers, and other users. The PSCN Control Center, located at Marshall Space Flight Center (MSFC), has overall responsibility for scheduling, software development, maintenance, and monitoring of the PSCN.

b. The NSI is a multi-discipline and multi-project network that is operated by the NSI Project Office at NASA's Ames Research Center (ARC). NSI provides data access and interchange among a wide variety of NASA science

disciplines. It provides direct user access to several disciplines supported

by ESDIS and gateways to other networks that will be part of the ESDIS Science Network (ESN).

4.2.5 Alternate Space/Ground Links

In the event that the Spacecraft is unable to communicate through TDRSS, NASA ground stations link the Spacecraft with the EOC for housekeeping and health and safety data. The ground stations include the following:

a. Deep Space Network (DSN).
b. Ground Network (GN).
c. Wallops Orbital Tracking Station (WOTS).

4.2.6 Earth Observing System Data and Information System

The Earth Observing System Data and Information System (EOSDIS) ground system consists of EDOS, ECOM, and ECS.

4.2.6.1 EOS Data and Operations System

The EOS Data and Operations System (EDOS) is a component of the EOS Ground System which provides an interface between the White Sands Ground Terminals and other EOS Ground Systems like the EOC, ASTER Instrument Control Center (ICC), and the DAACs. The interface between EDOS and the DSN, GN, WOTS, and Direct Playback stations is TBD.

EDOS processes data which conforms to the CCSDS recommendations.

For telecommand services, EDOS provides an asynchronous interface with the EOC, while providing a synchronous interface with the White Sands Ground Terminal. EDOS receives CCSDS Command Link Transmission Units (CLTUs) from the EOC and provides the CCSDS protocol for transmission of the data to the White Sands Ground Terminals.

For telemetry services, EDOS provides several data processing functions:

a) For data requiring real-time transmission (i.e., real-time housekeeping data to the EOC), EDOS extracts packets from the S-band downlink and transmits the packets with a minimum of delay at the rate received. In addition, EDOS provides a time tagging function which will allow for accurate spacecraft time determination.

b) EOS-AM data transmitted via the high-rate science link (i.e., the K-band link), undergoes level zero production data processing at EDOS. Playback data is forward ordered if necessary, and data sets are generated which contain time ordered packets (all with the same APID) with quality and accounting information appended. The size of the data sets generated is predetermined, so one data set may contain data from one or more TDRSS contacts. Overlap between TDRSS contacts is eliminated where it occurs. Level zero processed data sets are available for delivery to destinations within 21 hours of receipt of all the required data.

c) Up to 5% of the total data generated by the spacecraft may receive quick-look processing at EDOS. Quick-look processing is a means of delivering science/engineering data to a destination within approximately one hour of its receipt at EDOS. Any data included in a quick-look processed data set is also included in a routine level zero production processed data set. Quick-look processed data sets are limited to data received during a single TDRSS contact. The data in a quick-look processed data set may include all of the data associated with the specified APID received during the TDRSS session or only those packets for the specified APID that have a special secondary header flag set (quick look flag).

d) Another EDOS processing option is rate buffering. This option is intended to capture downlink data at a high data rate and deliver that data to a destination at a different, lower data rate with minimal processing delays.

   Rate buffered data sets are files of packets for a single APID with limited quality and accounting information appended.

EDOS provides an interface to the EOC, ICC, and DAACs for realtime spacecraft monitoring, data accounting, fault isolation, and configuration management.

4.2.6.2 EOS Communication Network

The EOS Communication Network (ECOM) is a facility system that supplies supporting services to EOSDIS. ECOM provides the set of circuits, switching, and terminal facilities for operational telecommunications support specific to the EOS project. Together with NASCOM, ECOM provides a high level of security for the command, telemetry, and other information directly related to the Spacecraft operations. ECOM provides the data transport path from the EDOS elements to various other elements of EOSDIS, including the EOC and ASTER ICC. ECOM supports a variety of bandwidths and uses state-of-the art communications methods, including fiber optics and domestic communications satellites.

4.2.6.3 EOSDIS Core System

The EOSDIS Core System (ECS) has the following three segments:

a. The Flight Operations Segment.
b. The Science Data Processing Segment.
c. The Communication and System Management Segment.

4.2.6.3.1 Flight Operations Segment

The Flight Operations Segment (FOS) manages and controls the EOS-AM Spacecraft and its instruments.

The FOS comprises the following three basic elements:

a. **The EOS Operations Center**

The EOS Operations Center (EOC) facility serves as the focal point for EOS-AM Spacecraft real-time flight operations. The EOC will be located at GSFC. Figure 21 shows the EOC staffing structure and relationships with other EOS-AM Project related entities.

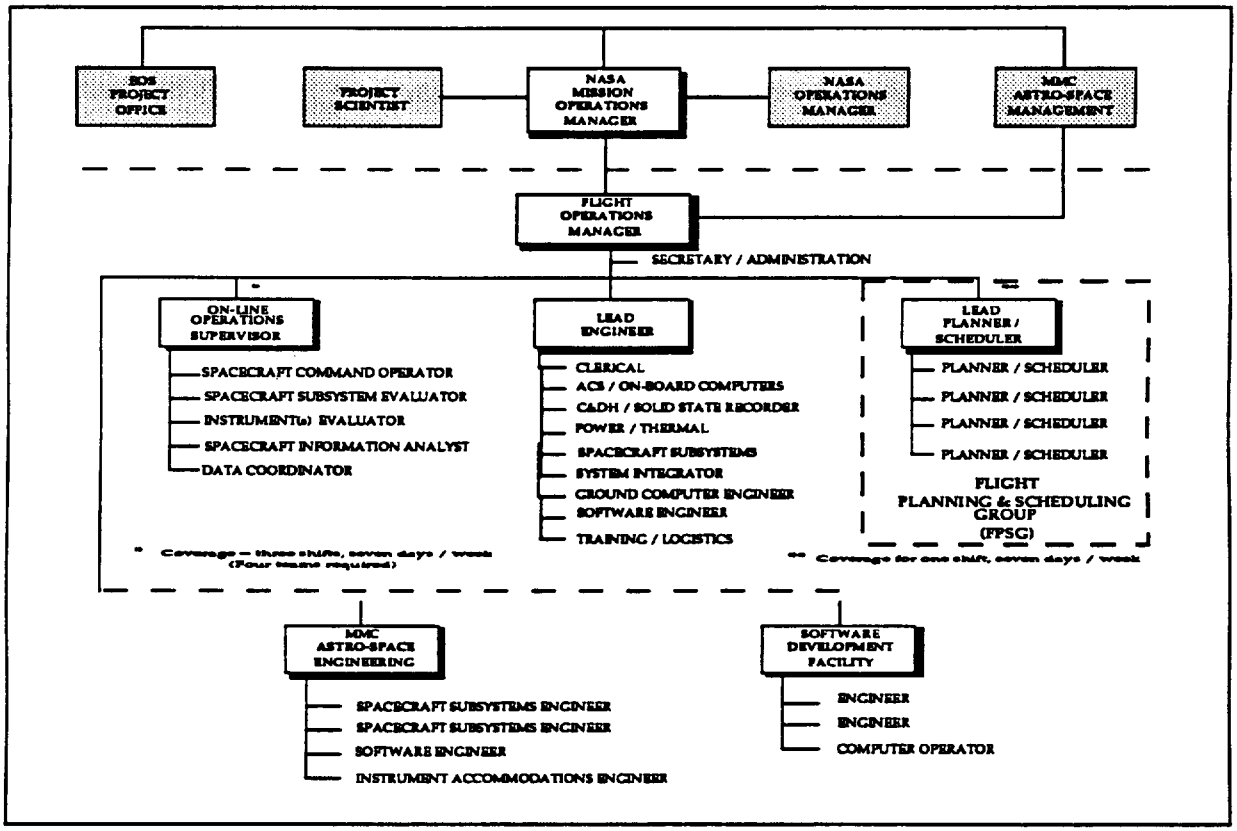

FIGURE 21 EOC STAFFING STRUCTURE

The flight operations elements responsible for the health and safety of the Spacecraft are located at the EOC. The FOT performs the detailed flight operations planning and scheduling, command, control, and real-time monitoring of the Spacecraft. The spacecraft engineering group, located at the EOC, is responsible for detailed Spacecraft performance analysis and produces periodic spacecraft subsystem performance reports.

Housekeeping, engineering, and instrument quick-look processed science data are also analyzed to support flight operations and to support Spacecraft and instrument engineering.

The FOT coordinates MOPITT operations with the Spacecraft and other instruments. Working with the MOPITT PI via the Instrument Support Terminal(s), the FOT plans and schedules the MOPITT and Spacecraft operations.

The EOS-AM spacecraft contractor provides a spacecraft simulator, which is a hybrid of the Spacecraft Bus Command and Data Handling (C&DH) subsystem and special simulation software. This simulator supports ground tests and training. The simulator will be located at the EOC.

Specific EOC command and telemetry database requirements for the MOPITT instrument are defined in Appendix II and Appendix III, respectively.

Specific requirements for EOC computer processing of MOPITT telemetry data are defined in Appendix III.

Specific requirements for MOPITT uplink transmissions are defined in Appendix II, while MOPITT uplink verification requirements are included within Appendix III.

b. The Instrument Control Center

There is no Instrument Control Center (ICC) for MOPITT.

c. Instrument Support Terminal

An Instrument Support Terminal (IST) is a software toolkit hosted on the MOPITT Principal Investigator (PI) workstation. The MOPITT IST workstation provides access to EOC based information and functions. It also provides for the exchange of data between the EOC and other instrument support systems at PI/TL or instrument team locations.

One or more ISTs (TBD) may be available to enable the MOPITT PI to participate in the planning, scheduling, commanding, and monitoring of the MOPITT instrument. The procedures for these interfaces are TBD and are furnished by the ECS contractor.

Figure 22 shows the MOPITT IST user perspective.

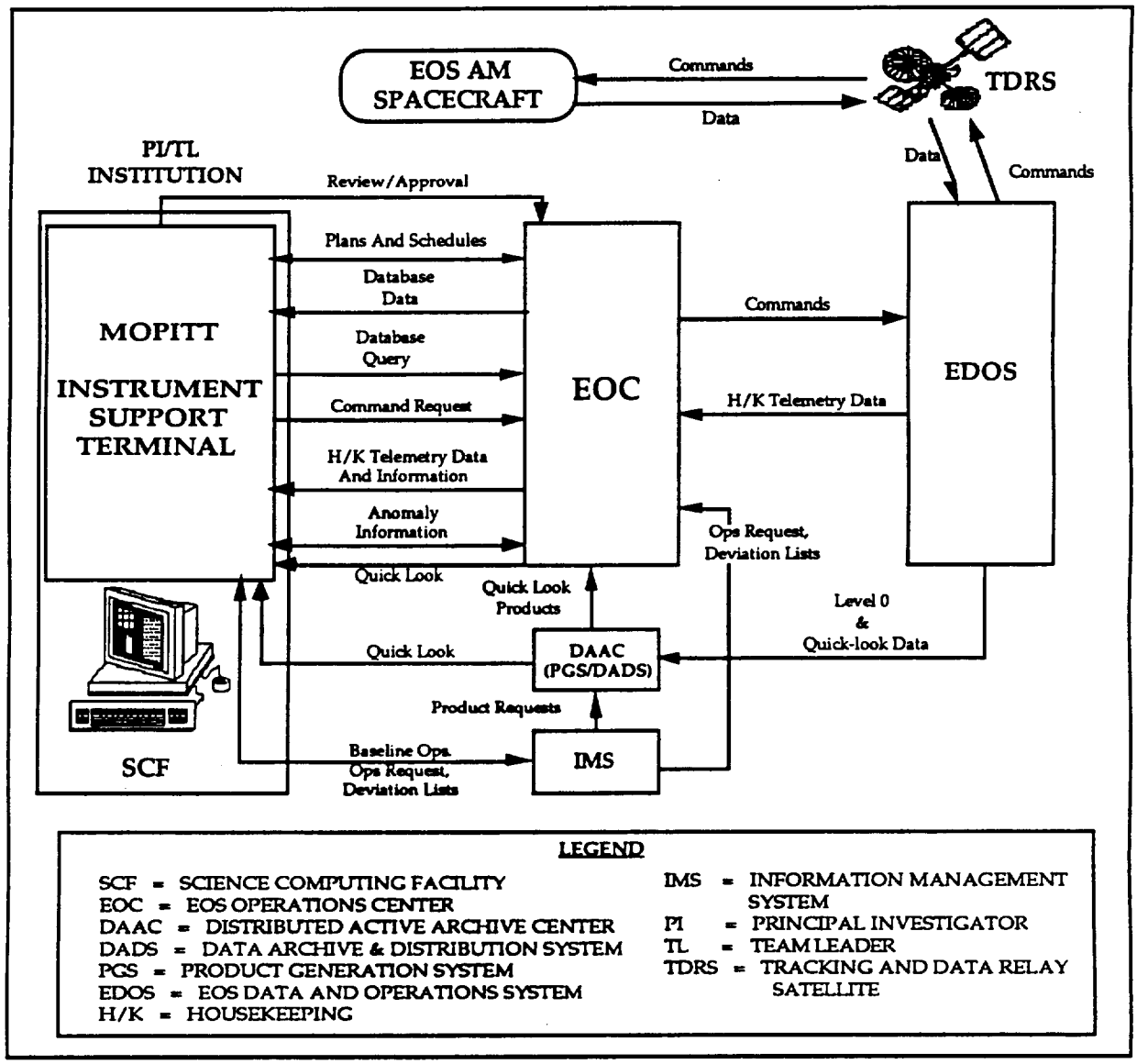

FIGURE 22 MOPITT IST USER PERSPECTIVE

The MOPITT IST provides for the exchange of data with the EOC. Other instrument support systems at the MOPITT PI location (e.g., for transfer of instrument microprocessor loads and dumps) also utilize the IST. Different authorized individuals may use the IST to perform different functions in support of MOPITT operations (e.g., some IST users may support planning and scheduling; others, anomaly resolution).

During the ECS development phase, the PI and the Earth Science Data Information System (ESDIS) project will negotiate the allocation of instrument operations functions to the MOPITT IST.

The ISTs run on a wide range of computer platforms that conform to industry standards. The MOPITT PI is responsible for ensuring that the

hardware that hosts the IST meets these standards and for integrating the toolkit with the hardware and other PI applications.

4.2.6.3.2 Science Data Processing Segment

The Science Data Processing Segment (SDPS) provides processing and distribution for science data and a data information system for EOSDIS. It consists of the following three kinds of elements:

a. The Distributed Active Archive Centers (DAACs) -- The DAACs will process data from the instruments to standard level 1-4 products, provide short- and long-term storage for EOS and selected non-EOS data, and distribute the data to users. Each is composed of a Product Generation System (PGS), a Data Archive and Distribution System (DADS), and a portion of the distributed Information Management System. Several DAACs are distributed around the United States.

b. The Information Management System (IMS) -- The IMS is a distributed data and information management service that includes a catalog system in support of user data selection and ordering. The IMS is distributed but will function as a single integrated information and data management service from the point of view of the user. The IMS therefore presents the same comprehensive view of the EOSDIS from any IMS access node.

c. The Science Computing Facilities (SCFs) -- SCFs are located at science investigator sites and are used to develop and maintain algorithms, produce data sets, validate data and data products, and analyze and synthesize EOS and other data to expand knowledge about the Earth system and its components.

The SDPS performs the EOSDIS functions of processing and archiving data from the EOS instruments and data from other earth science projects.

4.2.6.3.3 Communication and System Management Segment

The Communication and System Management Segment (CSMS) provides communications, networking, system-wide network management, and site/element operations management. This segment contains the following two elements:

a. The System Management Center (SMC) -- A system management service for EOSDIS ground system resources.

b. The EOSDIS Science Network (ESN) -- A communications network and services providing for the electronic distribution of data among the DAACs, SCFs, and other related science facilities.

The CSMS performs the EOSDIS functions of providing access to and distribution of EOS data products, networking capabilities, and the exchange of items such as data and algorithms.

5 FUNCTIONAL RESPONSIBILITY ALLOCATIONS

The allocations of responsibility for performing various operational functions in support of MOPITT flight operations are understood to be as follows:

5.1 Planning and Scheduling

Planning and scheduling has the objective of producing a detailed schedule for the activities of the EOS-AM Spacecraft (Spacecraft Bus and AM Instrument Set). The Flight Planning and Scheduling Group (FPSG), a segment of the FOT, is responsible for producing the integrated Spacecraft detailed activity schedule.

The planning and scheduling process includes the following three steps:

a. **A long-term mission planning phase.**
Long-term mission planning for the Spacecraft begins up to 5 years before the activities being planned and produces or updates the Long-Term Science Plan (LTSP) and Long-Term Instrument Plans (LTIPs).

b. **An initial scheduling phase.**
Initial scheduling, whose primary objective is to secure the SN resources for flight operations for the target week, begins about 3 weeks before the target week and uses baseline activity profiles, activity lists and/or activity deviation lists.

c. **A final scheduling phase.**
Final scheduling, which begins after the instrument and Spacecraft subsystem activity lists are generated, produces a detailed activity schedule for the Spacecraft Bus and the instruments. This schedule forms a basis for commanding the Spacecraft.

The science community and the FOT will integrate science and Spacecraft information in the planning and scheduling process.

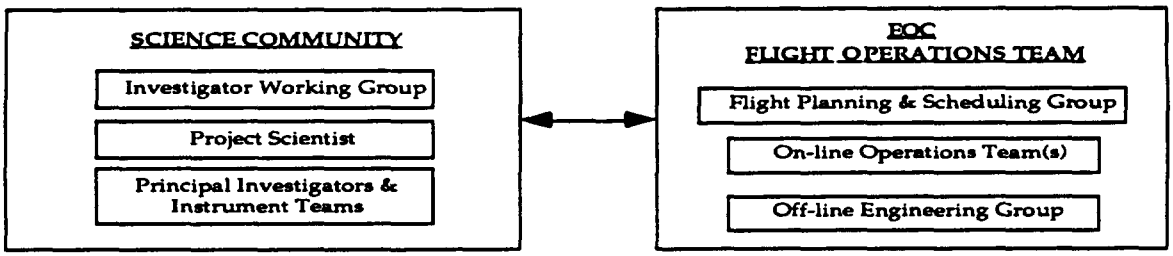

5.1.1 Long Term Planning

The project scientist produces, with the Investigator Working Group (IWG) recommendations, a LTSP for the Spacecraft. The PIs/TLs produce LTIPs for their

respective instruments. The FOT uses these long-term plans to develop a long-term Spacecraft operations plan.

The IWG recommends guidelines and overall science objectives to the Project Scientist, who defines policy. The IWG has representatives from each of the instruments. The IWG meets regularly, at least every 6 months (usually every three months). The LTSP presents science objectives for the Spacecraft establishes science mission priorities to be used in later scheduling, and recommends approaches for satisfying scientific objectives. The LTSP also defines special events and specifies requirements for coordination between instruments.

The MOPITT PI has responsibility for the MOPITT LTIP. The MOPITT LTIP also contains planned routine background operations for ongoing observations or operations that are related to routine calibration and maintenance activities.

The FPSG has the responsibility for Spacecraft planning. Some of the Spacecraft Bus subsystem activities that the FPSG manages are directly related to science and to Spacecraft Bus subsystem operations; these include the power, command and data handling, and communications subsystems. Others support Spacecraft maintenance, including battery management and orbit maintenance. The FPSG formulates long-term spacecraft operations plans and keeps the IWG and the MOPITT PI informed of changes in Spacecraft operations, including predicted frequencies in which science operations are affected for maintenance.

5.1.2 Initial Scheduling

Initial scheduling has the objectives of securing the required SN resources from the NCC. The FPSG identifies the SN resources required for Spacecraft Bus subsystem operations (e.g., TONS operations, orbit adjustment operations). Based on the baseline activity profiles, instrument activity lists, and activity deviation lists (if any) for the instruments, and the SN resource needs for the Spacecraft Bus subsystems, the EOC estimates on-board Solid State Recorder usage and SN resource needs and develops a TDRSS schedule request. The FPSG sends the schedule request to the NCC and negotiates with the NCC as necessary to secure the best possible SN resource allocations.

On the basis of the TDRSS schedule, the Spacecraft Bus activities required and instrument activities, the FPSG develops a preliminary Spacecraft activity schedule, which it makes available to all instruments. The MOPITT PI has access to available scheduling information via the IST. This global information includes the plans (e.g., LTSP, LTIPs, and long-term Spacecraft operations plan), orbit information (e.g., scheduling aids from the FDF), a TDRSS schedule for the target week, and the most current preliminary Spacecraft activity schedule.

The MOPITT PI expresses changes of scheduling needs with operations requests, which contain activity deviation lists, and provides them to the FPSG. The MOPITT PI acknowledges the "no change to operating instructions" by the use of TBD provided to the FPSG on a TBD schedule.

The Spacecraft Bus subsystems undergo initial scheduling. From the long-term Spacecraft operations plan, the FPSG identifies the activities that the subsystems must perform during the target week. Based on these activities, the FPSG generates an initial activity profile. The FPSG uses the activity profile to identify the Spacecraft Bus subsystems' SN resource needs.

After validation of the activity profile, the FPSG generates a TDRSS schedule request and sends it to the NCC, about 2 weeks before the target week. For about a week after the submission of this TDRSS schedule request, the FPSG can negotiate with the NCC for the best SN resource allocations. A week before the target week, the NCC provides the active TDRSS schedule to the FPSG. Based on the TDRSS schedule and other resource profiles, the FPSG builds a preliminary Spacecraft activity schedule for the target week.

5.1.3 Daily Planning and Scheduling

The FPSG is responsible for overall coordination of daily Spacecraft operations planning and scheduling activities. The MOPITT PI is responsible for reviewing the daily Spacecraft operations plan.

Final scheduling has the objective of producing for the Spacecraft a detailed activity schedule on which commanding will be based. Final scheduling is based on the preliminary activity schedule and any new input that has been accepted since the preliminary activity schedule was developed.

The FPSG combines the activity deviation lists, if any, with the corresponding baseline activity profiles to produce instrument activity lists. The FPSG develops the Spacecraft subsystem activity lists. Based on the instrument and Spacecraft subsystem activity lists the FPSG, using EOC resources, generates a detailed activity schedule for the Spacecraft. The FPSG can normally perform final scheduling without any input from the MOPITT IST.

As in initial scheduling, the MOPITT PI can access scheduling information using the IST.

Scheduling conflict resolution is TBD.

5.1.4 Planning Aids

Planning aids which pertain to long-term and daily flight planning activities are generated by the EOSDIS and FDF, and are available to the MOPITT PI.

The planning aid access details are TBD and are the responsibility of the EOSDIS Core Systems contractor.

5.2 Uplink Generation

The uplink generation process translates the Spacecraft detailed activity schedule, instrument microprocessor loads, and other information to be stored into Spacecraft command loads ready for uplink transmission. This process will be performed using TBD procedures. The MOPITT PI is responsible for generating all MOPITT control sequences which are used to implement planned instrument operations. The FPSG is responsible for generating control sequences which are used to implement planned Spacecraft Bus operations. The MOPITT PI is responsible for ensuring that the MOPITT commands in the command database are current and correct.

The MOPITT PI is responsible for defining MOPITT constraint checks, constraint violation resolution ground rules, and for performing checks on MOPITT microprocessor load sequences. Specific constraint check requirements for MOPITT are defined in Appendix II.

The FPSG is responsible for coordinating the processing of Spacecraft and instrument operating schedules into uplink loads. The primary point of contact between the MOPITT PI and the Flight Operations Team is TBD.

Spacecraft commanding (real-time uplink commands, realtime microprocessor loads to the instruments, real-time commands to the SCC, and stored SCC commands) has the purpose of directing the spacecraft and instruments to perform the activities as scheduled or as needed. This function has the following three major activities:

a. Normal commanding, which implements the Spacecraft Bus and instrument activities that have been specified in the Spacecraft detailed activity schedule.

b. Implementation of late changes to the scheduled course of activities as necessitated by late changes to the Spacecraft detailed activity schedule.

c. Emergency/contingency commanding required for safe operations of the Spacecraft Bus and instruments.

Command associated activities also involve command data validation, command verification, onboard memory management, and command history maintenance.

Stored SCC commands generated for MOPITT are typically composed of absolute time commands. An absolute time command has associated with it a well-defined execution time.

The assignment of command related responsibilities for MOPITT to the PI and the FOT are TBD. The FOT uplinks commands for MOPITT as specified by TBD approved plans and activities.

The FOT is responsible for uplinking scheduled MOPITT command loads. The PI may also request the FOT to initiate real-time commands. The FOT is responsible for generating, validating, deconflicting, and maintaining the command data for the Spacecraft Bus subsystems. The SCC software is the responsibility of the Spacecraft Bus contractor. The FDF provides the FPSG with required parameters for TONS operations and orbit adjustment operations. The FPSG incorporates the appropriate parameters into SCC-stored commands and SCC-stored Spacecraft tables.

5.3 Real-Time Operations

The Flight Operations Team is responsible for all aspects of real-time contact with the Spacecraft. The ECS contractor, using EOC resources, is responsible for processing real-time telemetry data to:

a. Determine the status of various Spacecraft systems.
b. Monitor the health and safety of Spacecraft Bus subsystems and each EOS-AM instrument.
c. Generate displays for use by the FOT.

The EOSDIS Core System contractor is responsible for IST display generation. The method and implementation are TBD.

The FOT is also responsible for generating and transmitting all real-time commands, for transmitting the stored command loads, and for verifying all uplink transmissions. Specific uplink verification requirements for MOPITT are defined in Appendix II.

The FOT is responsible for implementing the daily Spacecraft operations schedule under normal circumstances, and for taking appropriate action to preserve Spacecraft health and safety. The MOPITT PI is responsible for defining health and safety monitoring and reaction procedures for MOPITT, and the Flight Operations Team is responsible for implementing these procedures. Specific MOPITT health and safety monitoring and action requirements are defined in Appendix III and Appendix IV, respectively.

The MOPITT PI is also responsible for advising the FOT of any changes in MOPITT operating characteristics, capability, or in plans for MOPITT utilization which should be factored into any aspect of real-time operations. The FOT is responsible for advising the MOPITT PI (directly, or indirectly via the FPSG) of any departure from planned operation of MOPITT.

5.4 Performance Verification

Verification of operational performance is required for all Spacecraft Bus subsystems and MOPITT in order to maintain an up-to-date knowledge of Spacecraft operating characteristics, capabilities, and limitations. Performance verification results will be

used in science data analysis/evaluation and as an input to ongoing science and operational planning activities. The MOPITT PI is responsible for verifying all aspects of MOPITT instrument performance, and the FOT is responsible for verifying the performance of Spacecraft Bus subsystems throughout the Spacecraft mission. The SDF at the Spacecraft contractor's facility supports the FOT in verifying Spacecraft Bus flight software performance relating to on-board operation. The MOPITT PI is responsible for MOPITT performance verification requirements. The FOT and MOPITT PI are both responsible for advising the EOS-AM Science Team all/any performance verification results which are pertinent to the planning of future mission operations.

The FOT is responsible for maintaining a log of all uplink activities, which includes for each uplink activity the command data uplinked, the start and end times, and its receipt by the C&DH. The FOT, using EOC resources, also maintains information on whether stored command data are correctly stored in the SCC memory and information on whether the SCC-stored commands are dispatched successfully to the intended destination entities. For real-time commands, the FOT maintains information regarding command execution by the Spacecraft Bus subsystems. The FOT will verify MOPITT microprocessor loads via checksum or TBD method.

Similarly, the MOPITT PI is responsible for maintaining information on whether the stored or real-time instrument commands are successfully executed by MOPITT (Details are TBD). The MOPITT PI is also responsible for maintaining information on whether the instrument microprocessor loads are correctly loaded and executed (Details are TBD).

Command histories are maintained by the FOT and MOPITT PI.

5.5 Database and Software Maintenance

The Spacecraft SCC and MOPITT instrument microprocessor will contain software and database information which are subject to in-orbit maintenance. The EOC

computer systems contain a database which supports command generation, telemetry processing operations; and all ground system elements contain software subject to maintenance. The configuration of each software system and database are controlled with update procedures coordinated to maintain consistency between the EOS-AM Spacecraft and ground system and between various ground system facilities.

The FOT has overall responsibility for coordinating software and database maintenance activities to insure system-wide consistency. The SDF has responsibility for the Spacecraft Bus flight software.

The FOT is responsible for defining and verifying variable-parameter modifications for the allocation of command storage memory within the SCC, and for implementing SCC flight software and database modifications. The MOPITT PI is responsible for maintaining all MOPITT instrument microprocessor software and database contents for MOPITT.

The FOT is responsible for maintaining all Spacecraft Bus subsystem parameters within each ground system database and for maintaining the core definitions of all individual commands within the EOC systems. The FOT is also responsible for maintaining the core definition of all downlink telemetry functions within the EOC database for which EOC processing of any type is required. The MOPITT PI is responsible for providing to the EOC the parameter values which define all MOPITT commands and telemetry functions (e.g., serial magnitude commands having specific bit patterns or variable sub-fields; telemetry functions contained within an instrument-controlled format structure). The MOPITT PI is responsible for defining all other ground system database information updates which relate to MOPITT (i.e., command sequences, constraints, verification procedures; activity definitions; telemetry calibration data, limit-check threshold levels, derived function definitions, display formats).

The ESDIS Project is responsible for the maintenance of Code 500-supplied ground system software, and the EOSDIS Core System contractor for implementing the associated database modifications. The FOT is required to remain cognizant of database content and status within the EOC. The FOT interacts with the MOPITT PI to implement any database updates which are pertinent to MOPITT. The ECS contractor provides the database manager software for the EOC database.

5.6 Early Orbit Operations

The early orbit operations responsibility for performing various operational functions in support of MOPITT flight operations are understood to be as follows:

5.6.1 Launch - Orbit Acquisition Mission Phases

The MOPITT PI is responsible for defining any command sequences, EOC displays, and contingency procedures which should be available during launch through the Orbit Acquisition mission phase operations in order to assure the health and safety of MOPITT. Specific MOPITT requirements for pre-activation attention are defined in Appendix IV.

The launch vehicle places the Spacecraft in the injection orbit; and the Spacecraft senses separation (Spacecraft from launch vehicle). Data is relayed from the Advanced Range Instrumented Aircraft (ARIA) to the EOS Operations Center. Figure 23 shows the Launch / Ascent phase timeline.

The FOT is responsible for the following activities:

a. Monitor Spacecraft Bus housekeeping telemetry (Launch / Ascent specific display sets).

b. Monitor and verify Spacecraft Bus operating mode.

c. Monitor and verify Spacecraft Bus resources.

d. Verify stored commands execution.

e. Spacecraft scheduling and planning.

During the Orbit Acquisition Initialization phase, a positive Spacecraft energy balance and an S-Band communications link are established. A stable earth-oriented attitude is attained and an onboard orbit estimate is obtained.

The FOT is prepared to take command and control of the Spacecraft and are responsible for the following activities:

a. Monitor Spacecraft Bus housekeeping telemetry (phase specific display sets).

b. Monitor and verify Spacecraft Bus operating mode.

c. Monitor and verify Spacecraft Bus resources.

d. Verify stored commands execution.

e. Verify Earth acquisition.

f. Verify Solar Array deployment and solar tracking.

g. Verify High Gain Antenna deployment.

h. Verify command and control capability.

h. Spacecraft scheduling and planning.

During the Orbit Acquisition phase, the Spacecraft performs a series of delta-V maneuvers (significant change in velocity vector). The FDF and FPSG are responsible for calculating burn parameters, planning the delta-V maneuvers, calculating the required firings, scheduling, and performing the maneuvers. Figure 24 shows a timeline of the planned maneuvers. Figure 25 shows an activity flow.

The FOT is responsible for the Spacecraft operation and the following activities:

a. Monitor Spacecraft Bus housekeeping telemetry.

b. Monitor and verify Spacecraft Bus operating mode.

c. Monitor and verify Spacecraft Bus resources.

d. Verify stored command execution.

e. Coordinate the FDF Delta-V data inputs to the EOC.

f. Verify on-board Solid State Recorder status.

g. Real-time command and control.

h. Spacecraft scheduling and planning.

TIMELINE TIME REFERENCE

500 km Perigee Injection Orbit

LAUNCH (MINUTES)

L-TBD	L-TBD	L	L+3	L+4	L+15

GO TO INTERNAL POWER (MINUTES)

G	G+TBD	G+5	G+8	G+9	G+20	G+20	G+21	G+22.5	G+37.5	G+39	G+47	G+69.5	G+82	G+82	G+118	G+TBD	G+TBD	G+TBD	G+TBD	G+267

SEPARATION (MINUTES)

S	S	S+1	S+2.5	S+17.5	S+19	S+27	S+49.5	S+62	S+62	S+98	S+TBD	S+TBD	S+TBD	S+TBD	S+247

EVENT

- Go to Internal Power
- Disconnect T-0 Umbilical
- Ignite Stage 0 and Liftoff (L)
- Booster Engine Cutoff (BECO)
- Jettison Fairing
- Separate Launch Vehicle / Spacecraft - First Perigee
- Begin Rate Null (SCC Commands)
- Complete Rate Null
- Begin Solar Array Deployment
- Complete Solar Array Deployment
- Complete Earth Acquisition
- Enter first Eclipse
- Pass First Apogee
- Exit first Eclipse
- Solar Array begins to Track the Sun
- Pass second Perigee
- Activate HGA release mechanisms (SCC commands)
- HGA Deployment Complete
- HGA slew to Acquire sight to TDRSS (SCC Commands)
- S-Band link to TDRSS established through HGA
- First Delta-V Burn (third apogee earliest)

NOTE: This timeline was developed by the EOS System Engineering Group. Please note that it is preliminary and as definition of the Launch Vehicle System and sequence timing is developed, this timeline will be updated.

FIGURE 23 LAUNCH / ASCENT PHASE TIMELINE

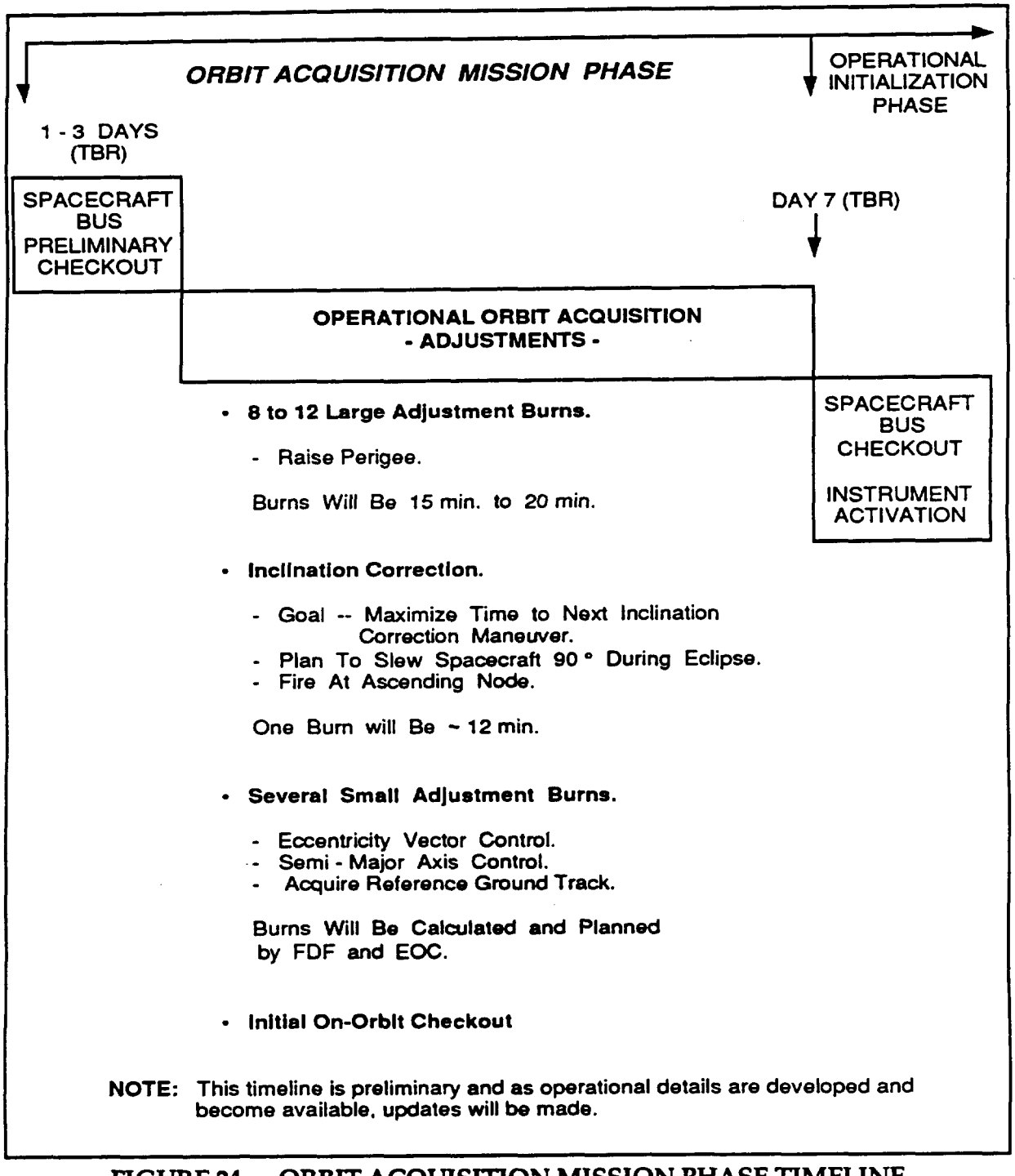

FIGURE 24 ORBIT ACQUISITION MISSION PHASE TIMELINE

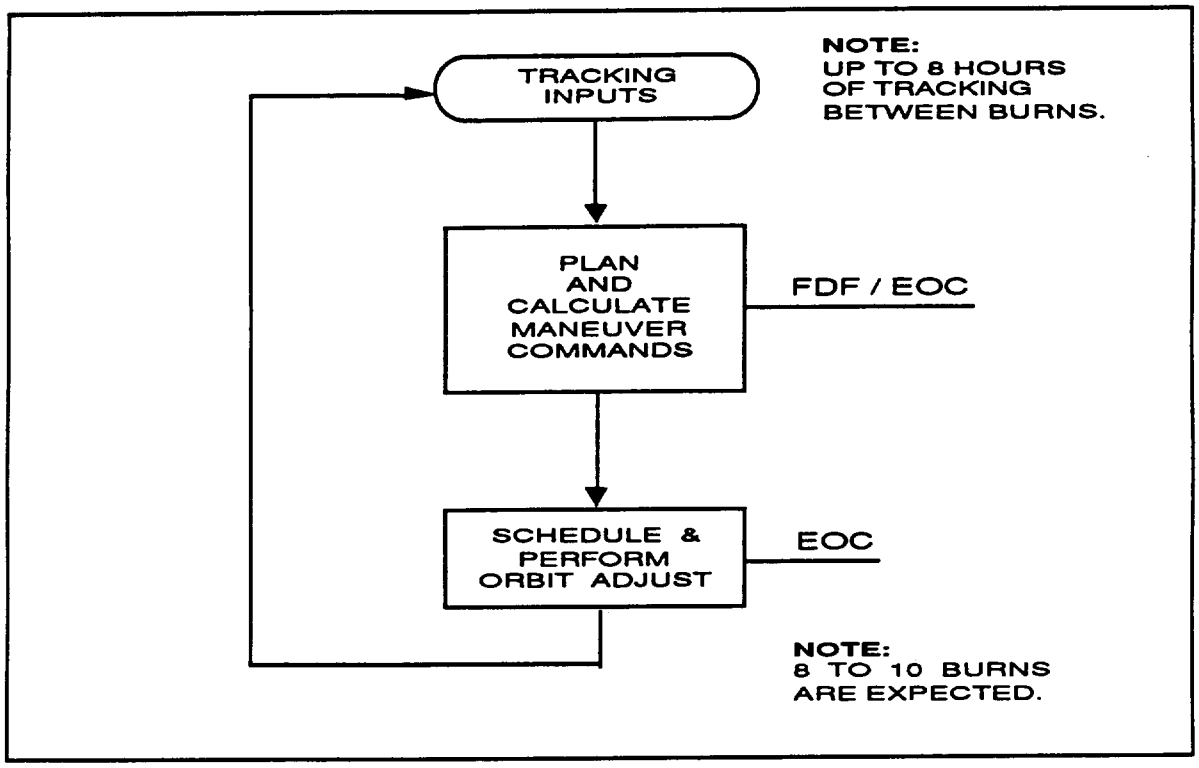

FIGURE 25 DELTA-V ACTIVITY FLOW

5.6.2 Activation

Spacecraft activation follows the launch through Orbit Acquisition phases, and leads into orbital mission operations. Most activation events occur over a period of several weeks during the Operational Initialization phase. The MOPITT PI is responsible for all MOPITT activation plan, and is expected to provide the MOPITT contribution to the initial Spacecraft activation plan. The FOT is responsible for the Spacecraft Bus activation plans and procedures.

The MOPITT PI or designated representative(s) is present in the EOC during each MOPITT activation event and has direct responsibility for MOPITT activation procedures within the EOC. The FOT supports the MOPITT PI or designated representative(s) in implementing instrument activation procedures, and coordinates initial MOPITT operations with other Spacecraft Bus and instrument activation events throughout this phase of operation. Specific requirements for FOT and MOPITT PI support are TBD. Activities during MOPITT instrument activation are defined in Appendix VI.

The FOT is responsible for the activation and checkout of the Spacecraft subsystems and the following activities:

a. Monitor Spacecraft Bus housekeeping telemetry.

b. Monitor and verify Spacecraft Bus operating mode.

c. Monitor and verify MOPITT health and safety data.

d. Coordinate the MOPITT operations with the Instrument Team.

e. Monitor and verify Spacecraft Bus resources.

f. Spacecraft scheduling and planning.

g. Stored command table loads.

h. TDRS and EOS-AM Spacecraft ephemerides load.

i. Instrument microprocessor loads (if required).

j. Memory dump verification (if required).

k. Verify stored commands execution.

l. Coordinate the FDF data inputs to the EOC for required Delta-V operations and TONS.

m. Verify SSR status and management initialization (normal operation).

n. Spacecraft and Ground Systems operational phase readiness verification and turn-over to the Spacecraft mature operations.

5.6.3 Transition to Orbital Operations

After the EOS-AM Spacecraft Bus and instruments are fully activated, Spacecraft operations transitions into the Operational mission phase. When this occurs, the normal daily flight operations planning and scheduling process begins along with normal ground system operations.

The FPSG uses the MOPITT baseline activity profile (provided before launch by the MOPITT PI), unless an operations request containing an activity deviation list is received from the MOPITT PI, to generate MOPITT instrument activity lists.

5.7 Spacecraft Maneuvers

Several types of maneuvers are executed by the Spacecraft at predefined points throughout the EOS-AM mission. A nominal long-term schedule of maneuver events is available prior to launch, and is maintained current along with other long-term planning information. The EOS-AM Science Team will be responsible for factoring the maneuver schedule into the long term science plan, and for establishing overall compatibility between this schedule and planned science operations. The FOT is responsible for maintaining maneuver schedule currency, and for notifying the EOS-AM Science Team (via the Project Scientist) of maneuver schedule changes.

The FOT has responsibility for all maneuver operations. The FOT and FDF are jointly responsible for the detailed planning of each Spacecraft maneuver and the FOT is responsible for maneuver execution. For orbit adjust maneuvers, the FDF is responsible for developing plans for corrective firings of the orbit adjust system and also is responsible for providing planning aid and operational data updates to reflect maneuver results. The FPSG coordinates with the FDF to schedule specific maneuver events consistent with long term science plan intent and is responsible for scheduling instrument operations to accommodate maneuver implementation. The MOPITT PI is responsible for defining all maneuver accommodation requirements (including special command sequences, EOC displays, etc.) for MOPITT, for reviewing the maneuver operational plans, and for advising the FOT, as appropriate, of any concerns regarding these plans. Specific MOPITT requirements for Spacecraft maneuver accommodation actions are defined in Appendix IV.

5.8 Special Observations

The FOT is responsible for coordinating with the MOPITT PI regarding any special observation activities, such as TBD, which may affect MOPITT.

Specific MOPITT requirements for special observation actions are defined in Appendix IV.

5.9 Contingencies

In the event that a Spacecraft emergency situation develops, the FOT is responsible for taking whatever action is appropriate to preserve Spacecraft health and safety. The FOT requests emergency support from the NCC. If TDRSS cannot be used or is not available, the NCC works with the DSN/GN/WOTS for support. The FOT utilizes emergency support, as available, to establish a safe Spacecraft configuration. First priority is given to mission critical functions (i.e., communications, power, attitude control), and then to establishing a safe configuration for the EOS-AM instruments and other Spacecraft Bus subsystems.

The MOPITT PI is responsible for defining the safe/survival configuration(s) for MOPITT, and the command sequences necessary to establish that configuration. Specific MOPITT requirements for contingency actions are defined in Appendix IV.

If the Spacecraft enters Safe Mode or Survival Mode, the FOT is responsible for verifying/establishing a safe configuration for each instrument and Spacecraft Bus subsystem. The FOT notifies the MOPITT PI that the Safe Mode or Survival Mode has interrupted normal operation, and of resulting MOPITT instrument status. The MOPITT PI is responsible for advising the FOT of any need for further priority attention to MOPITT. The MOPITT PI is also responsible for defining any reactivation procedure to be followed in restoring normal instrument operation. The FOT is responsible for implementing all Safe Mode or Survival Mode reaction and recovery operations. These actions will include:

a. Initiate the appropriate contingency procedure.

b. Recover and analyze stored housekeeping / health and safety data from the on-board data storage device (if possible).

c. Notify the MOPITT PI to coordinate actions that may have occurred which relate to instrument operation.

d. Notify cognizant engineering and management personnel.

e. Request appropriate institutional support.

f. Analyze associated telemetry data available for problem isolation.

g. Initiate a corrective action plan if applicable.

h. Continue to monitor real-time telemetry if available, and log all events.

The FOT notifies the MOPITT PI in the event an instrument health or safety incident is discovered by the Flight Operations Team. The FOT follows predefined instructions as prescribed by the MOPITT PI. The FOT has available and maintains a set of "safing" commands provided by the PI. The MOPITT PI will be responsible for evaluating the incident and advising the FOT of instrument status and plans for resuming operations.

The FOT is responsible for re-establishing the continuity of planned science operations, as defined in the Spacecraft activity schedule, once the Spacecraft has been returned to a normal operating configuration.

The MOPITT PI is responsible for defining all health and safety telemetry parameters and EOC monitoring criteria for MOPITT, and the procedures to be followed by the FOT should a MOPITT health and safety incident occur. The FOT is

responsible for executing predefined monitoring and response procedures, consulting with the MOPITT PI regarding instrument status, and further response actions which might be appropriate. The FOT advises the PI of MOPITT status regarding operational planning activities which are currently underway and the FOT is responsible for adjusting ongoing plans for MOPITT operation to accommodate the situation at hand (in coordination with the MOPITT PI). The MOPITT PI is responsible for defining command sequence, EOC procedure and any other modifications necessary to reflect changes in MOPITT operational capability or status whenever necessary throughout the EOS-AM mission.

6 INTERFACE EXCHANGE ITEMS

The MOPITT PI exchanges information electronically with the EOC and the Flight Operations Team by using the IST. The IST is connected to the EOC via the EOSDIS computer networks. These networks are available around the clock, supporting the exchange of information whenever it is required. The formats and forms for this information exchange is the responsibility of the ECS contractor and is TBD.

6.1 Planning and Scheduling

The MOPITT PI may access any planning and scheduling products in the EOC. This includes the long term plans, planning aids, the list of routine activities for the instrument, the list of deviations for the instrument, the TDRSS schedule for the Spacecraft, and the schedules for the other instruments and the Spacecraft Bus subsystems.

The planning aids consist of information derived from predicted orbit information and are identified in Appendix V. The planning aids can display the information graphically or the information can be listed in tabular form. Details are TBD.

The list of routine instrument activities can be reviewed by the MOPITT PI using the IST. This list is the activities that MOPITT normally perform over its cycle (e.g., per orbit, per 16 day orbit cycle). It is initially defined prior to launch and is changed infrequently. Modifications are discussed with the Flight Planning and Scheduling Group (FPSG); modifications that impact the science data collected are coordinated with the IWG and the project scientist. Modifications to the instrument activity list are submitted via the IST to the FPSG for inclusion in the planning and scheduling database after the proper approval.

The MOPITT PI can submit and review the schedule of deviations from the normal activities. This schedule includes activities such as special calibrations and microprocessor loads. These deviations are provided to the FPSG one (TBR) week in advance. Note that changes to the routine activities due to an instrument or Spacecraft problem are handled as exceptions to the plans and schedules. The schedule of activities and commands associated with recovering from an anomaly and typically developed over shorter time frames than those for normal operations.

Quick look data, either housekeeping, instrument engineering, or science data, is identified during the scheduling process and the secondary header flag in the packet is set or the EDOS delivery orders for the delivery of the data from a TDRSS session is modified. The MOPITT PI submits requests for quick look data at least several days in advance to the flight planning and scheduling group using the IST.

6.2 Command Generation

Command generation includes real-time commands, SCC stored commands, and commands/loads for the MOPITT microprocessor.

The MOPITT PI provides the instrument microprocessor software and tables to the EOC for uplink, using the IST. Non-urgent information for uplink is provided at least two days in advance. The IST is also used to send the EOC the command mnemonics required to implement any non-routine activity, such as the commands to recover from an anomalous situation. The IST/EOC procedures and protocols insure that the transfer of information to be uplinked is authorized, complete, and consistent.

The MOPITT PI is capable of using the IST to review and/or approve the command loads generated by the FOT in the EOC from the routine activity list and the requested deviations from normal operations. Planning, scheduling, and/or command products that must be approved by the MOPITT PI for routine and anomalous operations are TBD.

6.3 Real Time Operations

Using the IST, the MOPITT PI may monitor the instrument and Spacecraft housekeeping data as it is received in the EOC. The data may be displayed using any previously defined format that is in the operations data base. Formats for plots, alphanumeric information, and graphic formats are TBD.

The MOPITT PI may monitor the commanding process via the IST. Status information is available on which commands have been generated, which have been successfully uplinked, and which have been issued to the instrument. The verification that the instrument successfully executed the commands is the responsibility of the MOPITT PI. Exceptions are to TBD by the ECS contractor and the MOPITT PI.

6.4 Analysis

The MOPITT PI may use the IST to perform analysis on instrument and spacecraft data. The housekeeping data can be plotted versus time or versus other housekeeping parameters. Standard capabilities include trend analysis, and minimum/maximum/mean statistics.

The following IST functions are provided for instrument engineering, quick look science data and other science analysis: TBD.

The analysis of health and safety data is limited to that received by the EOC, and includes all real time housekeeping data and at least one orbit per day of a complete orbits worth of housekeeping data from the onboard SSR. If the MOPITT PI needs housekeeping data from, a specific time of day, this is requested in advance.

In addition to housekeeping data the MOPITT PI is able to use the IST to access the EOC operations history log. This log contains a complete log of all significant activities in the EOC, including the schedule, command and command verification information, alarms and limit violations, and selected operator actions. About 7 days of operations history data is kept in the EOC; older logs are available from the GSFC DAAC. The IST provides the tools to extract data from the operations history by time and type.

6.5. Operations Database

The MOPITT PI supplies the EOC with an operations data base prior to launch that contains the instrument telemetry formats, command formats, procedures, limits, constraints, and so on. The MOPITT PI may view this data base using the IST and may submit requests for changes to the data base. The data base is under configuration control. The ECS contractor is responsible for configuration control and the details are TBD.

Urgent requests can be handled more expeditiously (details are TBD).

6.6 Other Interface Exchange Items

The IST provides an electronic mail capability to support the general communication between the MOPITT PI, other instrument teams, and the FOT personnel in the EOC.

The IST provides a file transfer capability for the exchange of bulk data such as microprocessor loads and dumps.

The MOPITT PI uses the IST to provide the EOC with periodic operations reports on the status of MOPITT. Integrated reports on the Spacecraft and instruments developed by the EOC are available to the MOPITT PI via the IST.

7 JOINT OPERATING PROCEDURES

The interface procedures which are followed in conducting MOPITT flight operations are understood to be as follows:

7.1 PI/EOC FOT Interface

The MOPITT PI and the Flight Operations Team (see Figure 26) interface routinely regarding mission planning, uplink generation, and performance verification matters and interface as required regarding real-time operations. The FOT and MOPITT PI interface as appropriate regarding MOPITT instrument accommodations of Spacecraft maneuvers and contingency operations. The FPSG serves as the primary point of contact for the MOPITT PI regarding all EOC operations, and regarding all flight operations plans, planning aids, command generation inputs and outputs, and performance reports which are pertinent to MOPITT.

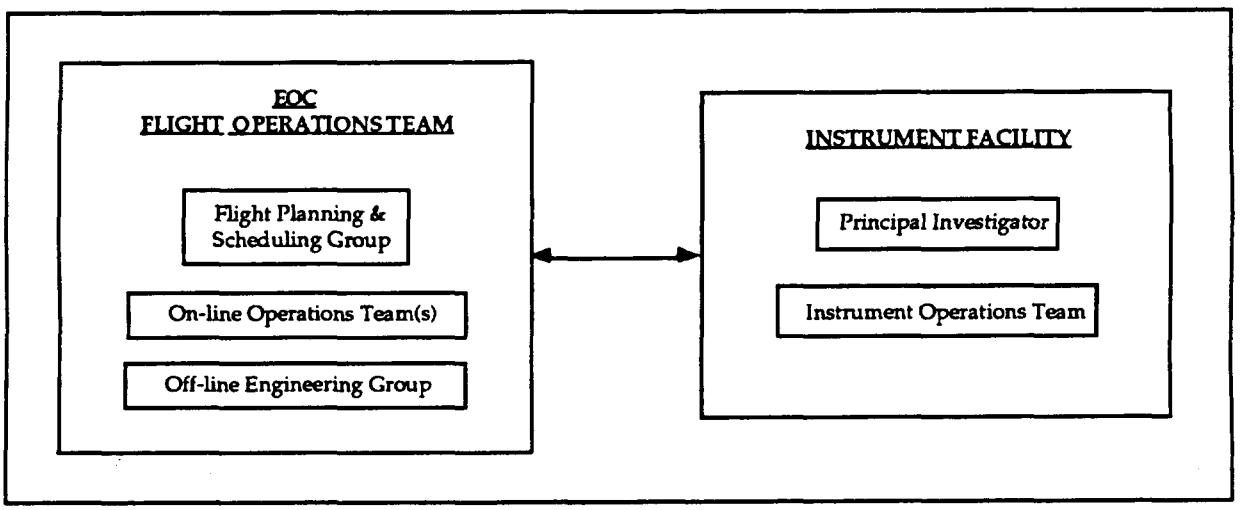

FIGURE 26 PI FACILITY / EOC FOT INTERFACE

7.1.1 Daily Operations Planning

Under normal circumstances, the MOPITT baseline activity profile is used to develop the initial activity list 4-7 days before the corresponding operational period begins. The MOPITT PI provides exceptions, activity deviation lists, in the event normal MOPITT baseline activities needs to be altered. The FPSG staff coordinates all operations planning inputs, and keeps the MOPITT PI advised of the timetable for accessing plans to be reviewed, and for providing inputs and/or comments regarding these plans.

7.1.2 Command Generation

Command generation is performed by the FPSG using EOC resources. The FPSG serves as the point of contact for all review comments related to command generation processing.

7.1.3 Special Operations

The FPSG notifies the MOPITT PI whenever a Spacecraft maneuver operation is being planned, or whenever a special operation (TBR) or contingency operation which affects MOPITT occurs. The MOPITT PI defines MOPITT requirements for accommodating the special operation and/or for resuming normal operation when the special operation has concluded. Where real-time operation is a factor, the FOT represents the MOPITT PI in coordinating implementation of appropriate real-time procedures. If a special operation disrupts planned operations (e.g., contingency situation), the FOT advises the MOPITT PI of the disruption, and they will jointly define the procedure for restoring operational plan continuity.

7.1.4 EOC Database

The FPSG manages the availability of operations plans, planning aids, and command generation processing inputs and outputs, and coordinates with the MOPITT PI regarding access to this information. The MOPITT PI generates all additions, deletions, and modifications to the EOC database for MOPITT, and notifies the FPSG of each submission. The FPSG coordinates the database approval and update procedure required to incorporate each change, and notifies the MOPITT PI when the change has been incorporated. The MOPITT PI reviews the modified database, and notifies the FPSG of any discrepancy which requires corrective action. The format to be used is TBD and is the responsibility of the ECS contractor.

7.1.5 Microprocessor Load Verification

The FOT transmits the MOPITT microprocessor loads and verifies the loads via checksum (TBR). If verification beyond a checksum is required or a checksum capability is not provided, the MOPITT PI verifies that each microprocessor load transmitted to the instrument(s) is properly received and installed within microprocessor memory. When verification is prerequisite to instrument scheduling, the MOPITT PI will notify the FPSG staff of load verification. When real-time telemetry indications of microprocessor load acceptance are available, load verification feedback may be provided by the FOT at the discretion of the MOPITT PI.

7.2 PI/EOC Command Management Function Interface

The MOPITT PI interfaces with the EOC through the IST interface defined in TBD. The basic interface for information exchange is via file transfer. The MOPITT PI has access to EOC resident information and processing capabilities (details are TBD).

The MOPITT PI interfaces procedurally with the EOC as follows:

7.2.1 Operations Plans

In support of flight planning activities, the MOPITT PI can access EOC information via the IST. Any comments or proposed deviations to operational plans may be flagged (TBR) for the FPSG attention.

7.2.2 Planning Aids

Short term planning aid data initially appears within the EOC TBD weeks beforehand, and will be updated at TBD intervals. Long term planning aids are updated as requested by the EOS-AM Science Team (normally for each long term science plan update). Special planning aid data files may be assembled to contain only data of interest to the MOPITT PI and transferred to the MOPITT IST. Planning aid data is updated within the EOC according to a (TBD) regular schedule.

7.2.3 Command Generation

Routine Spacecraft command generation processing will begin TBD hours before the operational period, and is completed no later than TBD hours beforehand. The MOPITT PI does not interact directly with EOC Spacecraft command generation processing.

7.2.4 Performance Feedback

Observed performance of MOPITT is documented in feedback reports which are transmitted in text form using the electronic mail capabilities of the EOC and IST interface. Routine and special reports are generated by the MOPITT PI at his IST, and are transferred to the EOC for posting. Performance reports are filed and archived by the FPSG.

7.3 PI/FOT Interface

The MOPITT PI and the on-line operations team interface to the extent that real-time operations are significant to the MOPITT PI, and as required to exchange instrument/Spacecraft Bus performance information or to supplement the routine interface between the MOPITT Principal Investigator and the FPSG.

The MOPITT PI interfaces procedurally with the FOT as follows:

7.3.1 Real Time Operations

For real-time operations, the on-line operations team (TBD) is the point of contact for the MOPITT PI (TBR). In the event of an instrument anomaly, MOPITT operations team (TBD) coordinates with the on-line operations team (TBD) for any actions required. MOPITT operations team (TBD) contacts the MOPITT PI as soon as possible to review the situation and to define any follow-up activities required.

7.3.2 Special Operations

The normal interface for handling maneuver accommodation, contingency adjustments, and departures from planned operations involves the MOPITT PI and the FPSG. The on-line operations team may, however, become involved in these matters in lieu of the FPSG staff during non-working hours, especially under time-critical circumstances. In such a case, the on-line operations team handles immediate concerns, with the FPSG staff handling longer-term and follow-through aspects.

7.3.4 Initial Operations

During initial MOPITT activation, the MOPITT PI or delegate at the GSFC EOC works directly with the FOT. Flight planning and scheduling personnel interface with the MOPITT PI to perform the MOPITT planning and scheduling functions.

7.3.5 Performance Verification

The MOPITT PI and FOT may exchange performance information regarding instrument and/or Spacecraft operation in order to fully evaluate observed performance and capability. A Spacecraft engineer from the FOT serves as the point of contact for Spacecraft performance verification inquiries.

7.4 PI/DAAC Interface

The MOPITT PI interfaces with the DAAC via DAAC toolkits (that are co-operable with the IST toolkit). DAAC toolkit details are TBD. The data processing interface between IST(s) and the DAAC is utilized for flight operations functions.

Details are TBD.

7.5 PI Access to Telemetry

The following guidelines define access to telemetry data for the MOPITT PI:

a. Telemetry data is recorded continuously throughout the EOS-AM mission by the on-board SSR. Data retrieval is obtained TBD per orbit.

b. Telemetry data is acquired in real-time for approximately 20 minutes of each orbit.

c. The on-line operations team monitors all real-time contact intervals and the telemetry data acquired is processed in real-time. The EOC computer performs status determination, event detection and limit-check processing, and generates displays containing telemetry data and processing results.

8 IMPLEMENTATION AGREEMENTS

The following paragraphs describe the plans for implementing the data input to the operational system to support MOPITT flight operations.

8.1 Flight Operations Database

The basic flight operations database are provided by the Spacecraft contractor. Database conversion, to the EOC system, is the responsibility of the EOSDIS Core System contractor. This database, containing commands, telemetry, and limits, is used for in-orbit flight operations.

8.1.1 Commands

Instrument commands are placed in the EOC database. The database contains command capabilities identified by the MOPITT PI, with support from the FOT and Spacecraft subsystem engineers. All flight operational commanding required is tested and demonstrated during Spacecraft Integration and Test. The EOC command categories are TBD.

8.1.2 Instrument Telemetry

The MOPITT PI, with support from the FOT and Spacecraft subsystem engineers, identifies telemetry point definitions required for flight operations; and the Spacecraft contractor ensure that telemetry points have been defined and tested/demonstrated during Spacecraft Integration and Test.

8.1.3 Instrument Limits

The MOPITT PI, with support from FOT and Spacecraft subsystem engineers, ensures that the Spacecraft integration and test limit definitions are correct for on-orbit flight operations. If not, new limits are defined and the ECS contractor coordinates (Project approval and entry) the change to the EOC database.

The MOPITT PI with support from the FOT and Spacecraft subsystem engineers identifies the specific reactions to be taken during all out-of-limit conditions (i.e. Red, Yellow, and Delta limits). The FOT documents all out-of-limit reactions in the TBD Plan.

8.1.4 Database Approval

The MOPITT PI and Spacecraft subsystem engineers access the database via IST to review their appropriate section(s). Changes to the database are submitted via IST mail. The PI and Spacecraft subsystem engineer checks the database to ensure that the data is functionally and syntactically correct. After all of the database information for MOPITT has been approved, the MOPITT PI signs off on his portion of the EOC database.

8.2 Operational Displays

The MOPITT PI, with support from the FOT and Spacecraft subsystem engineer, identifies which displays are needed for in-orbit flight operations. Any displays deemed necessary are defined by the MOPITT PI and once approved, are entered or converted by the EOSDIS Core System contractor. The MOPITT PI with support from the Spacecraft subsystem engineers, assists the FOT with any conversion problems (i.e. mnemonics, values, etc.). The mechanism for defining pages and transferring Spacecraft integration and test pages to the EOC is TBD.

8.3 Operations Procedures

The MOPITT PI, with support from the FOT and Spacecraft subsystem engineers, establishes what operational procedures are needed for on-orbit flight operations. The MOPITT PI should keep in mind that I & T building blocks may have to be assembled into contiguous functional activities that are of reasonable duration harmonious with the in-orbit operational contacts. The FOT reviews all completed operational procedures for compatibility with flight operations such as procedure duration, logical break points, etc.

8.3.1 EOC Definition

The FOT furnishes to the MOPITT PI a description of the EOC operations procedures. In addition, the FOT is available to answer questions regarding EOC operations during operations procedure development.

8.3.2 I&T Procedures to EOC Operations Procedures Conversion

The conversion of procedures to the EOC is the responsibility of the EOSDIS Core System contractor and is TBD.

8.3.3 I&T Databases to EOC Operations Databases Conversion

The conversion of databases to the EOC is the responsibility of the EOSDIS Core System contractor and is TBD.

8.3.4 Flight Unique Procedures

The MOPITT PI, with support from the FOT and Spacecraft subsystem engineers, identifies any MOPITT instrument unique flight operations procedures. These procedures are created by the MOPITT PI with support from the Spacecraft subsystem engineers and submitted to the FOT.

8.3.5 Procedure Submittal

The MOPITT generated operations procedures are submitted to the FOT by one of the following methods: TBD

Procedure entry, after approval, into the operational system is the responsibility of the EOSDIS Core System contractor and is TBD.

8.3.6 Approved EOC Procedures

Once the procedures have been reviewed and approved, they cannot be changed without the NASA Mission Operations Manager's (MOM) approval.

8.3.7 Procedure Verification

The FOT reviews all operations procedures to verify the accuracy of the directives and also the logic to the extent possible. The MOPITT PI with support from the FOT and Spacecraft subsystem engineers identifies operations procedures that require execution for verification. Prior to launch, the FOT conducts a scheduled verification of operations procedures that will include EOC execution and transmission to the Spacecraft/instrument. Procedure verification details are the responsibility of the EOSDIS contractor and are TBD.

8.4 Narrative Procedures

The MOPITT PI, with support from the FOT and Spacecraft subsystem engineers, defines any standard and contingency operating procedures needed for in-orbit flight operations. These procedures are defined by the EOSDIS contractor and are TBD.

8.4.1 Standard Operating Procedures

The standard operating procedures define the day-to-day operations of the EOS-AM Spacecraft at the EOC.

These procedures are baselined and procedure changes require the NASA Mission Operations Manager's approval.

These procedures are defined by the EOSDIS contractor and are TBD.

8.4.2 Contingency Operating Procedures

The contingency operating procedures define the actions required by the FOT during potential and credible anticipated non-nominal situations. Examples of this category of procedures for MOPITT are:

- Instrument requirements during Spacecraft safe mode and survival mode.
- A procedure to be followed in the event of a MOPITT ALERT condition.

These procedures are defined by the EOSDIS contractor and are TBD.

APPENDIX I

10 SPACECRAFT CONTROLS COMPUTER INSTRUMENT REQUIREMENTS

Specific requirements for interaction between the Spacecraft on-board computer and MOPITT are understood to be as follows:

10.1 Stored Command Requirements

MOPITT stored command requirements are as follows:

10.1.1 Absolute Time Commands

MOPITT requirements for Absolute Time Command utilization are TBD.

10.1.2 Relative Time Command Sequences

MOPITT requirements for Relative Time Command Sequences (RTCS) command utilization are TBD.

10.2 Telemetry Monitor Requirements

Telemetry Monitor (TMON) application to MOPITT is TBD.

APPENDIX II

20 INSTRUMENT COMMAND PROCESSING REQUIREMENT

Specific command processing requirements for MOPITT are understood to be as follows:

20.1 Activity Planning Requirements

Activity planning for MOPITT is as follows:

20.1.1 Activity Definition

TBD

20.1.2 Event Definition

TBD

20.1.3 Activity Scheduling

There are critical timing requirements for MOPITT commands or activities. Details are TBD.

20.2 Constraint Check Requirements

TBD

20.2.1 Command Level

TBD

20.2.2 Activity Level

TBD

20.2.3 Schedule Conflicts

The timing of MOPITT commands may be TBD to resolve schedule conflicts.

20.3 Real-Time Command Requirements

TBD

20.3.1 Utilization Plans

TBD

20.3.2 Command Generation Capabilities

TBD

20.3.3 Transmission Requirements

There are no unique requirements for transmitting real-time MOPITT commands.

20.4 Microprocessor Load Handling Requirements

TBD

20.4.1 Uplink Message Structures

TBD

20.4.2 Transmission Requirements

Each microprocessor load is created as a unit, and is transmitted in complete form. If retransmission is necessary, the complete load is retransmitted.

20.5 Command Database Requirements

TBD

20.5.1 Command Definition

TBD

20.5.2 Unique Command Structures

None have been identified for MOPITT.

20.5.3 Activity Definitions (EOC Command Management)

TBD

20.5.4 Stored Command Sequences (EOC Command Management)

TBD

20.5.5 Real-Time Command Sequences (EOC)

TBD

20.5.6 Utilization Constraints

TBD

APPENDIX III

30 TELEMETRY PROCESSING REQUIREMENTS

Specific requirements for the processing of real-time MOPITT telemetry data are understood to be as follows:

30.1 Decommutation Requirements

All telemetry required by the EOC to support instrument early orbit operation and activation are assumed to be defined in the I&T databases to be transferred to the EOC.

30.1.1 Engineering Telemetry Format

MOPITT telemetry formats are TBD.

30.1.2 Science Telemetry Format

MOPITT telemetry formats are TBD.

30.2 Derived Function Generation Requirements

TBD

30.3 Status Determination Requirements

TBD

30.3.1 Mode Definition

TBS

30.3.2 Event/Mode-Change Detection

TBD

30.4 Uplink Verification Requirements

TBD

30.4.1 Command Verification

TBD

30.4.2 Microprocessor Load Verification

MOPITT microprocessor load transmissions are verified by the FOT with a check sum or TBD method.

The MOPITT PI verifies microprocessor loading in the instrument. (TBD)

30.5 Health and Safety Monitoring Requirements

MOPITT health and safety are monitored by the FOT. The MOPITT PI identifies critical instrument health and safety parameters along with their limits. The MOPITT PI may monitor MOPITT health and safety at his facility if desired.

30.5.1 Limit Check Requirements

TBD

30.5.2 Alarm Requirements

Alarms are required when yellow or red limits are reached. Other conditions are (TBD).

30.6 Display Generation Requirements

TBD

30.6.1 Parameter Calibration

TBD

30.6.2 CRT Page Display

TBD

30.6.3 Strip-Chart Recorder Displays

TBD

30.6.4 Hardcopy Outputs

TBD

30.7 EOC Telemetry Database Requirements

TBD

30.7.1 Telemetry Function Definition

TBD

30.7.2 Derived Function Definition

TBD

30.7.3 Mode/Event Definition

TBD

30.7.4 Limit Check Thresholds

TBD

30.7.5 Alarm Generation Criteria

TBD

30.7.6 Command Verification Criteria

TBD

30.7.7 Display Definition

TBD

30.7.8 Calibration Parameters

TBD

APPENDIX IV

40 OPERATIONAL ACTION REQUIREMENTS

Specific MOPITT requirements for operational action under specified conditions are understood to be as follows:

40.1 Contingency Action Requirements

TBD

40.1.1 Emergency Power-Down

The emergency power down sequence for MOPITT is TBD.

40.1.2 Limits/Alarm Reaction

Out-of-limits conditions are reported to the MOPITT Principal Investigator. Out of limit conditions are (TBD).

40.1.3 Spacecraft Safe Mode (SCC running)

TBD.

40.1.4 SCC Halted

TBD

40.1.5 Other On-Board Processors Halted

TBD

40.1.6 Uplink Transmission Failure

TBD

40.2 Preactivation Requirements

TBD

40.3 Spacecraft Maneuver Accommodation

The plan for MOPITT operation during Spacecraft maneuvers is TBD.

40.3.1 Orbit Adjust

TBD

40.4 Alignment/Calibration Requirements

TBD

40.5 Special Observation Requirements

TBD

APPENDIX V

50 PLANNING AID REQUIREMENTS

A standard set of orbital parameters and selected orbital events is generated by the FDF and transferred to the EOC (and TBD) where the MOPITT PI can access the data for planning purposes and for use in the generation of any additional unique planning aids required. The accuracy of the data is TBD (the best possible).

The following are example summaries of the long term and short term data to be provided. The actual data to be selected for MOPITT use is TBD. Details associated with these TBD parameters are defined in TBD.

50.1 Parameter Definition

TBD

50.1.1 Long Term

The long term aids to be used by MOPITT are TBD.

The following is an example summary of long term aids:

EOS-AM Orbital Characteristics

a. Brouwer mean orbital elements
b. Solar beta angle
c. Direction of S/C flight
d. Local mean Sun time
e. S/C ascending node
f. Length of TBD day and night
g. Length of S/C day and night

Ephemeris:

a. Solar
b. Lunar
c. Planetary

Star Catalog

a. Ascending Node Prediction
b. Longitudinal spacing and precession rate.

Solar Eclipse predictions.

50.1.2 Short Term

The short term aids to be used by MOPITT is TBD.

The following is an example summary of short term aids:

a. Spacecraft ephemeris
b. Brouwer mean orbital elements.
c. Predicted Orbit Adjust time
d. Solar Eclipse predicts.

Orbital Events
a. Ascending and descending node
b. Spacecraft nadir sunrise and sunset terminator crossing
c. Terminators (both) for TBD degree line of sight at TBD altitude
d. South Atlantic Anomaly entrance and exit.
e. Sunset and Sunrise at TBD altitude.
f. Yaw and elevation angle to sun TBD-seconds before sunset
g. Yaw angle to sun at sunrise for TBD altitude.
h. Grazing sunrise begin/sunset end event
i. Grazing sunrise end event

Solar Beta Angle.

50.2 Parameter Specifications

The MOPITT unique specifications for planning aid parameter are TBD

50.2.1 Information Accuracy

TBD.

50.2.2 Data Precision

TBD.

50.2.3 Data Frequency

TBD.

50.3 Information Handling Requirements

The MOPITT PI accesses planning and scheduling tools via his IST. Details are TBD.

50.3.1 Format

Standard IST/EOC interface file format is TBD.

50.3.2 Packaging

Standard (i.e., time-annotated date file) is TBD.

50.4 Access Timeline Requirements

MOPITT accesses planning and scheduling aid data on a TBD basis.

50.4.1 Lead Time

TBD (i.e., long term parameters consistent with long-term science planning schedule; short-term parameters TBD days/hours beforehand).

50.4.2 Retention

TBD (i.e., long term parameter projections throughout mission, short-term parameters until current).

APPENDIX VI

60 SPECIAL ACTIVATION REQUIREMENT

Specific requirements for activation of MOPITT are understood to be as follows:

60.1 Commanding Requirements

Commands required for activation and normal operations are predefined in the database (I&T and EOC).

60.1.1 Special Command Sequences

At least TBD command sequences are required for the initial activation checkout steps planned for MOPITT.

60.1.2 Special Command Constraints

The EOC TBD mode transmission are used for all MOPITT commands not defined in the database.

60.1.3 Real-time Command Generation

There are TBD special real-time command generation requirements for MOPITT activation. All normal real-time command generation capabilities (defined in 20.4) are required.

60.1.4 Special Command Transmission Requirements

TBD.

60.2 Telemetry Processing Requirements

TBD

60.2.1 Special Telemetry Formats

There are no special telemetry formats identified for MOPITT.

60.2.2 Special Processing Functions

TBD

60.2.3 Special Processing Parameters

TBD

60.2.4 Special Displays

MOPITT science functions are to be displayed in TBD.

60.2.5 Strip Chart Recorder

TBD

60.3 Remote Support Coordination Requirements

TBD

60.3.1 Quick-look Playback Handling

Access to quick-look data is provided via the TBD.

60.3.2 Voice Communications

Voice communications are required between MOPITT activation position within the EOC and the MOPITT remote terminal facility throughout MOPITT activation.

60.4 Facility Requirements

The MOPITT PI requires access to TBD standard instrument activation position within the EOC, and standard office-type working space and services for a TBD activation staff.

APPENDIX VII

70 ABBREVIATIONS and ACRONYMS

ACE	Attitude Control Electronics
ADAC	Attitude Determination and Control
APID	Application Process Identifier
ARC	Ames Research Center
ARIA	Advanced Range Instrumented Aircraft
ASTER	Advanced Spaceborne Thermal Emission and Reflection
ATC	Absolute Time Command
BDD	Baseline Description Document
BDU	Bus Data Unit
C&DH	Command & Data Handling
CADU	Channel Access Data Unit
CCSDS	Consultative Committee For Space Data Systems
CERES	Clouds and Earth's Radiant Energy System
CLTU	Command Link Transmission Unit
CMD	Command
COMM	Communications Subsystem
CSMS	Communication and System Management Segment
CTIU	Command and Telemetry Interface Unit
C&T	Command and Telemetry
DAA	Data Acquisition Assembly
DAAC	Distributed Active Archive Center
DADS	Data Archive and Distribution System
DAR	Data Acquisition Request
DAS	Direct Access System
DB	Direct Broadcast
DCU	Data Control Unit
DDL	Direct Downlink
DMU	Data Memory Unit
DP	Direct Playback
DSN	Deep Space Network
ECOM	EOS Communication Network
ECS	EOSDIS Core System
EDOS	EOS Data and Operations System
EDU	Error Detection and Correction Data Unit
EOC	EOS Operations Center
EOS	Earth Observing System

EOS-AM	Earth Observing System - 10:30 descending node orbit
EOSDIS	EOS Data and Information System
EPS	Electrical Power System
ESDIS	Earth Science Data and Information System
ESN	ESDIS Science Network
FDF	Flight Dynamics Facility
FDIR	Failure Detection, Isolation and Recovery
FIFO	First In First Out
FOS	Flight Operations Segment
FOT	Flight Operations Team
FOV	Field of View
FPSG	Flight Planning and Scheduling Group
GIIS	General Instrument Interface Specification
GN	Ground Network
GN&CS	Guidance, Navigation and Control Subsystem
GSFC	Goddard Space Flight Center
HGA	High Gain Antenna
I & T	Integration and Test
ICC	Instrument Control Center
ICD	Interface Control Document
IFOU	Instrument Flight Operations Understanding
IMS	Information Management System
IST	Instrument Support Terminal
IWG	Investigator Working Group
JPL	Jet Propulsion Laboratory
Kbps	Kilobits per Second
KSA	Ku-Band Single Access
LTIP	Long Term Instrument Plan
LTSP	Long Term Science Plan
Mbps	Megabits per Second
MISR	Multi-angle Imaging Spectro Radiometer
MO&DSD	Mission Operations and Data Systems Directorate
MODIS	Moderate Resolution Imaging Spectrometer
MOM	Mission Operations Manager
MOPITT	Measurements of Pollution in the Troposphere
MSFC	Marshall Space Flight Center

NASA	National Aeronautics and Space Administration
NASCOM	NASA Communication Network
NCC	Network Control Center
NIR	Near Infrared
NSI	NASA Science Internet
P/B	Playback
PGS	Product Generation System
PI	Principal Investigator
PSCN	Program Support Communications Network
R/T	Real-Time
RAM	Random Access Memory
ROM	Read only Memory
RS	Reed-Solomon
RTCS	Relative Time Command Sequence
SCC	Spacecraft Controls Computer
SCF	Science Computing Facility
SDF	Software Development Facility
SDPS	Science Data Processing Segment
SCT	Stored Command Table
SFE	Science Formatting Equipment
SMA	S-Band Multiple Access
SMC	System Management Center
SN	Space Network
SSA	S-Band Single Access
SSR	Solid State Recorder
STGT	Second TDRSS Ground Terminal
SWIR	Short Wave Infrared
TBD	To Be Determined
TBR	To Be Reviewed
TBS	To Be Supplied
TDRS	Tracking and Data Relay Satellite
TDRSS	Tracking and Data Relay Satellite System
TL	Team Leader
TLM	Telemetry
TMON	Telemetry Monitor
TOD	Time-of-Day
TONS	TDRSS Onboard Navigation System

USCCS ..... User Spacecraft Clock Calibration System
UTC ..... Universal Time Code

VCID ..... Virtual Channel Identifier
VCDU ..... Virtual Channel Data Unit
VNIR ..... Visible and Near Infrared

WOTS ..... Wallops Orbital Tracking Station
WSGT ..... White Sands Ground Terminal

Next Assembly	Used on
20008500G1	EOS–AM

First Application
EOS–AM

Revisions		Rev 001	
Ltr	Description	Date	Approve
Initial Issue		8/4/93	CM/GSF

Revision Record Continued on Sheet _____

Contract No.	NAS5–32500
Written	R. Thomas
Date	8/3/93
Approved	F. Komro
Date	8/3/93
Issued	G. Rauscher
Date	8/3/93

MARTIN MARIETTA
POST OFFICE BOX 800
PRINCETON, NEW JERSEY 08543–08
TELEPHONE (609) 490–3400

Interface Control Drawing,
Earth Observing System AM Spacecraft to
Measurement Of Pollution In The Troposphere

Size	Code Ident No.	
A	49671	20008850

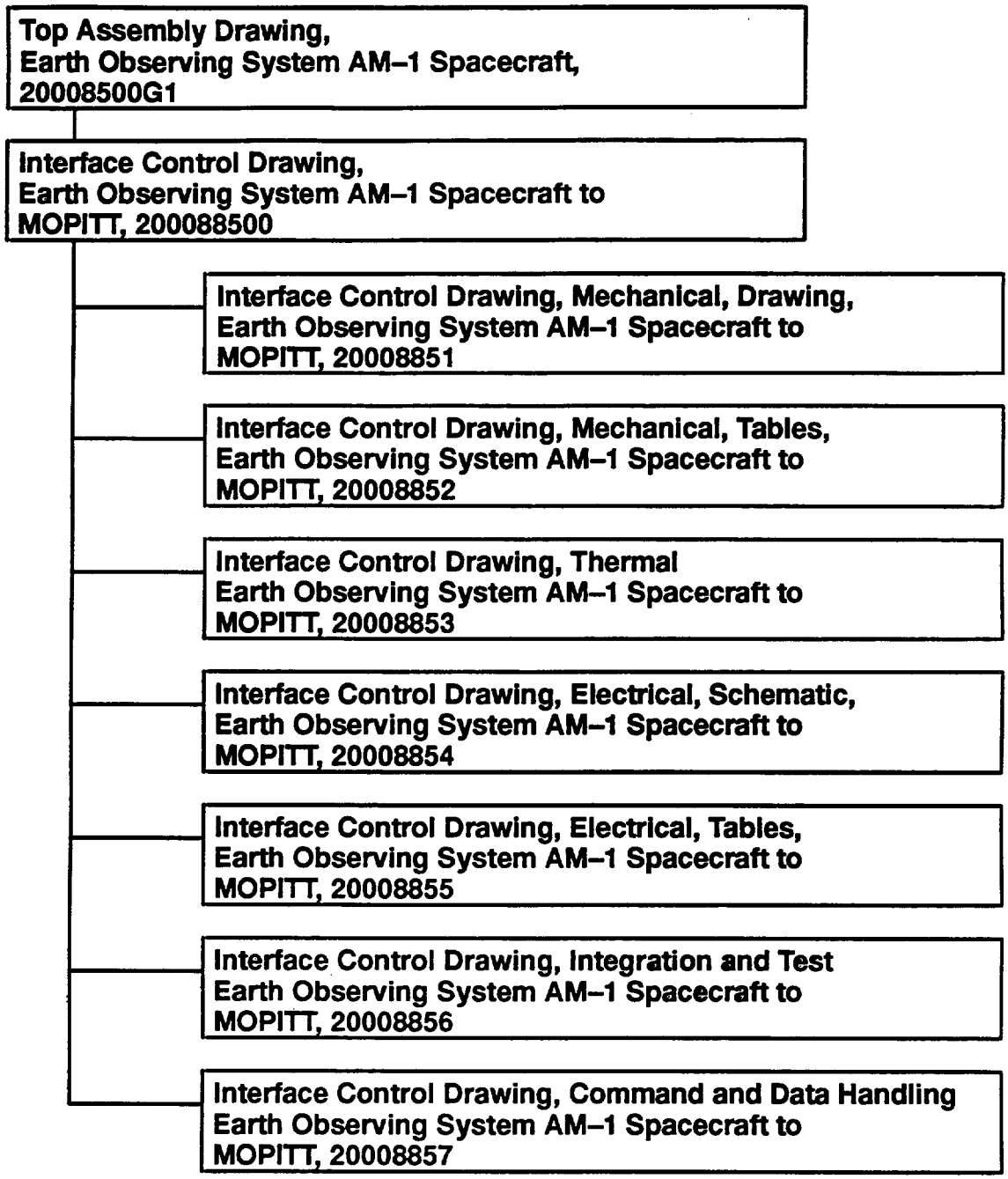

Figure 1. Drawing Tree

Table I. ICD Revision Status

20008851 MICD Drawing		20008852 MICD Tables		20008853 TICD		20008854 EICD Schematic		20008855 EICD Tables		20008856 I&T ICD		20008857 C&DH ICD	
Issue	Date	Issue	Date	Issue	Date	Issue	Date	Issue	Date	Issue	Date	Issue	Date
draft 001	8/2/93												

Size A

Code Ident No. 49671

20008850

Sheet 3

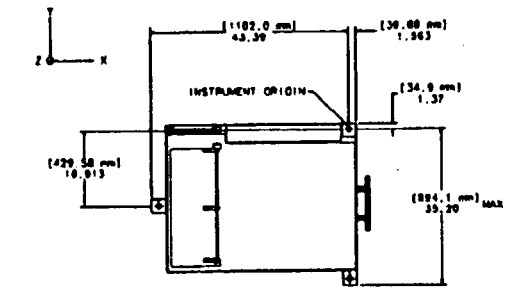

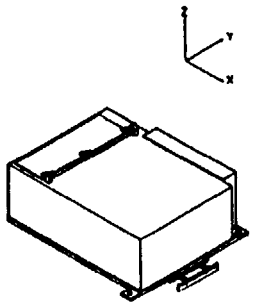

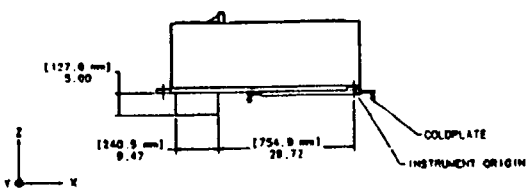

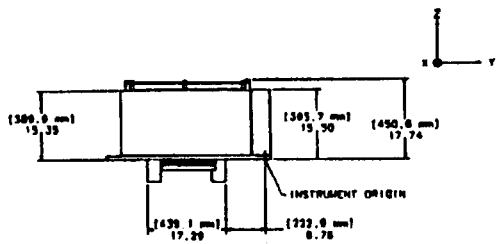

NOTES

1. THE MOPITT MECHANICAL INTERFACE INFORMATION IS CONTAINED IN THIS DRAWING, THIS DRAWING AND 20008840, WHICH TABLES.
2. THE SPACECRAFT COORDINATE AXES ARE SHOWN. THE INSTRUMENT COORDINATE AXES ARE PARALLEL TO THE SPACECRAFT AXES. THE RELATIONSHIP BETWEEN THE INSTRUMENT AND SPACECRAFT COORDINATE AXES IS SHOWN IN 20008842, WHICH TABLES, FIGURE 1 AND TABLE 1.
3. LOCATION OF MOUNTING HOLES WILL BE CONTROLLED BY COORDINATED TOOLING AND HELD TO DIMENSIONS SHOWN.
4. THERMAL BLANKET (MULTI-LAYER INSULATION) ENVELOPE (NOT SHOWN) NOT TO EXCEED .50 IN (12.7 MM) OUTSIDE FROM STRUCTURE DIMENSIONS SHOWN.
5. SHEET 4 SHOWS MOPITT, ITS ACCOMMODATION EQUIPMENT, AND PART OF THE SPACECRAFT STRUCTURE. OTHER INSTRUMENTS, EQUIPMENT, AND STRUCTURE ARE NOT SHOWN FOR SIMPLICITY. FUSE DISTRIBUTION BOARD, INTERFACE CONNECTOR PANEL, AND HEATER CONTROLLER ELECTRONICS SIZE AND LOCATIONS ARE ALSO SHOWN.
6. THE INSTRUMENT ORIGIN IS AT THE CENTER OF THE MOUNTING HOLE DEFINED BY THE BOTTOM OF THE BEARING SEAT OF THE 3-AXIS KINEMATIC MOUNT INTERFACE BRACKET. THE INSTRUMENT X-Y PLANE IS DEFINED BY THE LOWER SURFACE OF THE BOTTOM BEARING SEAT IN THE THREE INTERFACE BRACKETS (DATUMS -C-, -D-, AND -E-).
7. SHEET 6 SHOWS THE ENTIRE SPACECRAFT ON THE ATLAS IIAS FAIRING WITH 36 INCH EXTENSION. (SHOWN OPEN FOR CLARITY).
8. VELOMEX ANGULAR INSTRUMENT FOV AS DEFINED ON SHEET 10 OF THIS DRAWING AND ON SHEET 10 20008843, TBD.
9. KINEMATIC MOUNT ACCOMMODATES BEARING ROTATION FROM NOMINAL POSITION AS FOLLOWS:
   INSTRUMENT CONTRIBUTION: 1.36°
   SPACECRAFT CONTRIBUTION: 1.75°
   COMBINED DEFORMATIONS, INCLUDING THERMAL DISTORTION, DYNAMIC DEFLECTION, AND MANUFACTURING TOLERANCES, SHALL NOT CAUSE BEARING TO EXCEED THESE VALUES DURING ROT ROTATION.

TABLE OF CONTENTS (SEE NOTE 1)

TITLE	SHEET
[illegible]	[illegible]

IN ADDITION TO ECO AND SCO APPROVALS, ALL CHANGES ON THIS DRAWING SHALL HAVE THE APPROVAL AND THE FULL AGREEMENT OF THE PARTIES LISTED BELOW

APPROVAL SIGNATURES

[illegible]		[illegible]		[illegible]		[illegible]	

OUTLINE DRAWING - LAUNCH CONFIGURATION

CE Astro Space

INFORM BOARD DRAWING, MECHANICAL, DATA GRAPHIC SHEET 10 SPACECRAFT 10 DEVELOPMENT OF MOPITT ON THE SPACECRAFT

E	46671	20008851

jjorrvs/MOPITT/20008851_1.dwg

20008851
30 August 1993

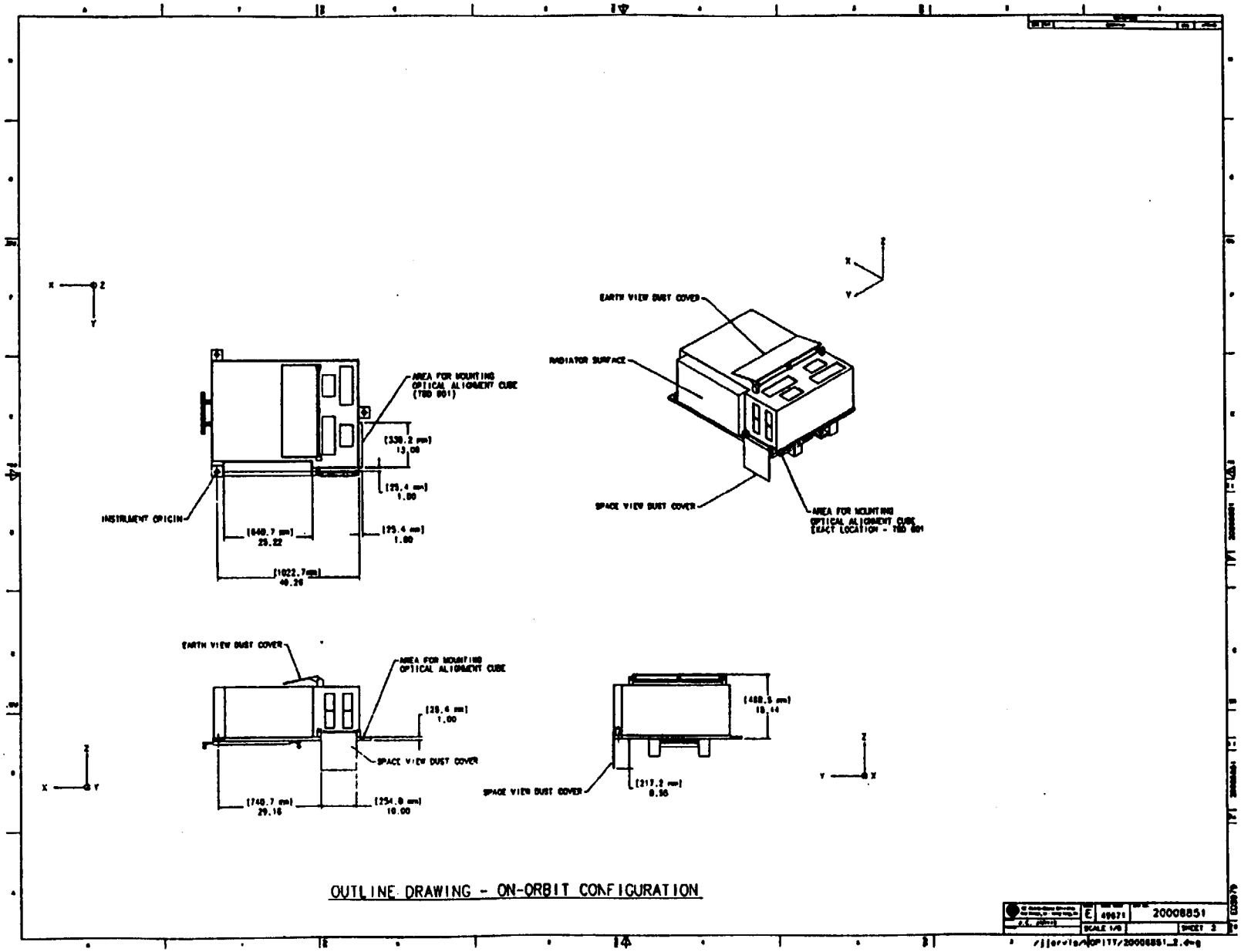

OUTLINE DRAWING - ON-ORBIT CONFIGURATION

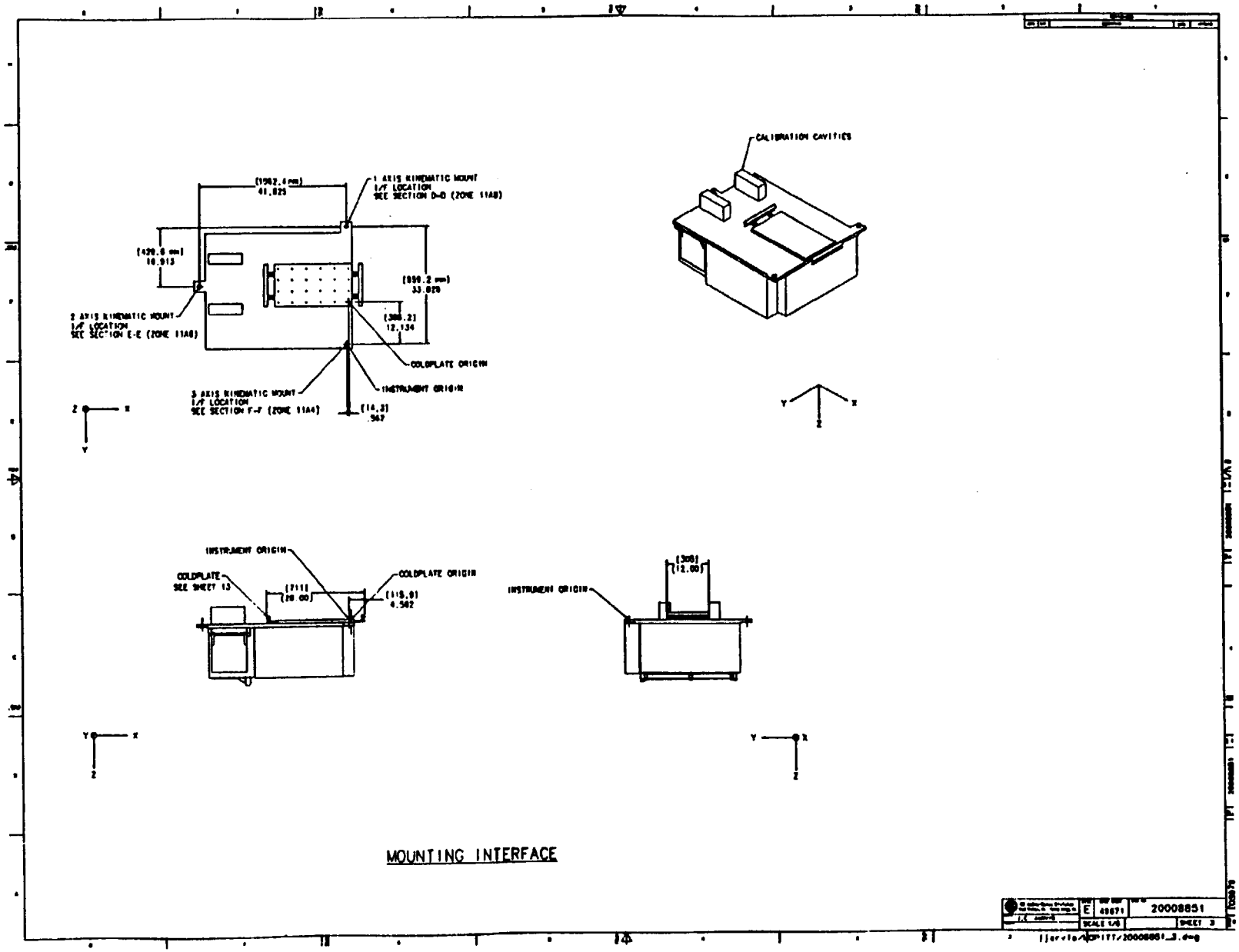
CALIBRATION CAVITIES
1 AXIS KINEMATIC MOUNT
I/F LOCATION
SEE SECTION D-D (ZONE 11A8)
2 AXIS KINEMATIC MOUNT
I/F LOCATION
SEE SECTION E-E (ZONE 11A8)
3 AXIS KINEMATIC MOUNT
I/F LOCATION
SEE SECTION F-F (ZONE 11A4)
COLDPLATE ORIGIN
INSTRUMENT ORIGIN
INSTRUMENT ORIGIN
COLDPLATE
SEE SHEET 13
COLDPLATE ORIGIN
INSTRUMENT ORIGIN
MOUNTING INTERFACE
E
20008851
SCALE 1/8
SHEET 3

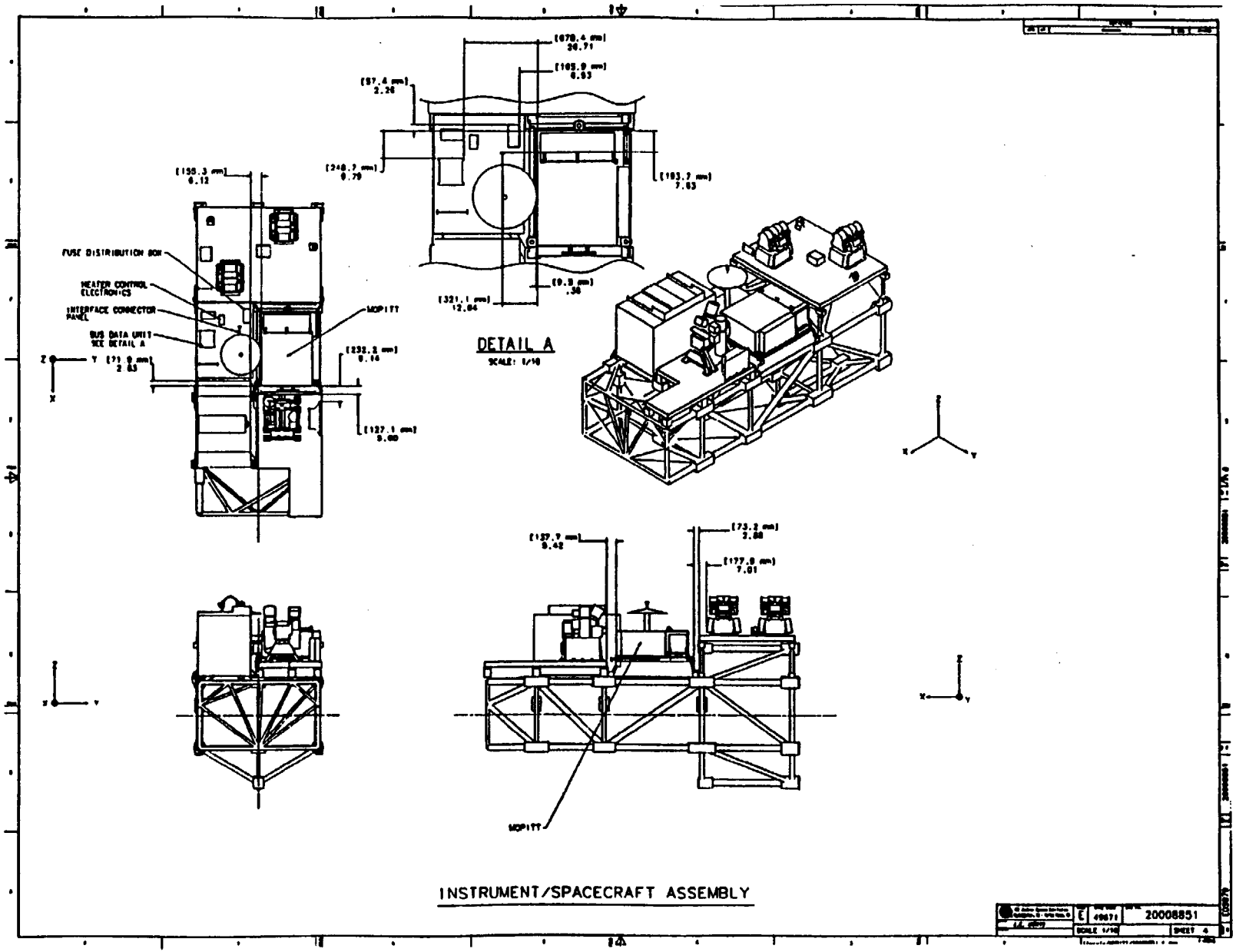
FUSE DISTRIBUTION BOX
HEATER CONTROL ELECTRONICS
INTERFACE CONNECTOR PANEL
BUS DATA UNIT SEE DETAIL A
MOPITT
DETAIL A
SCALE: 1/10
MOPITT
INSTRUMENT/SPACECRAFT ASSEMBLY
20008851

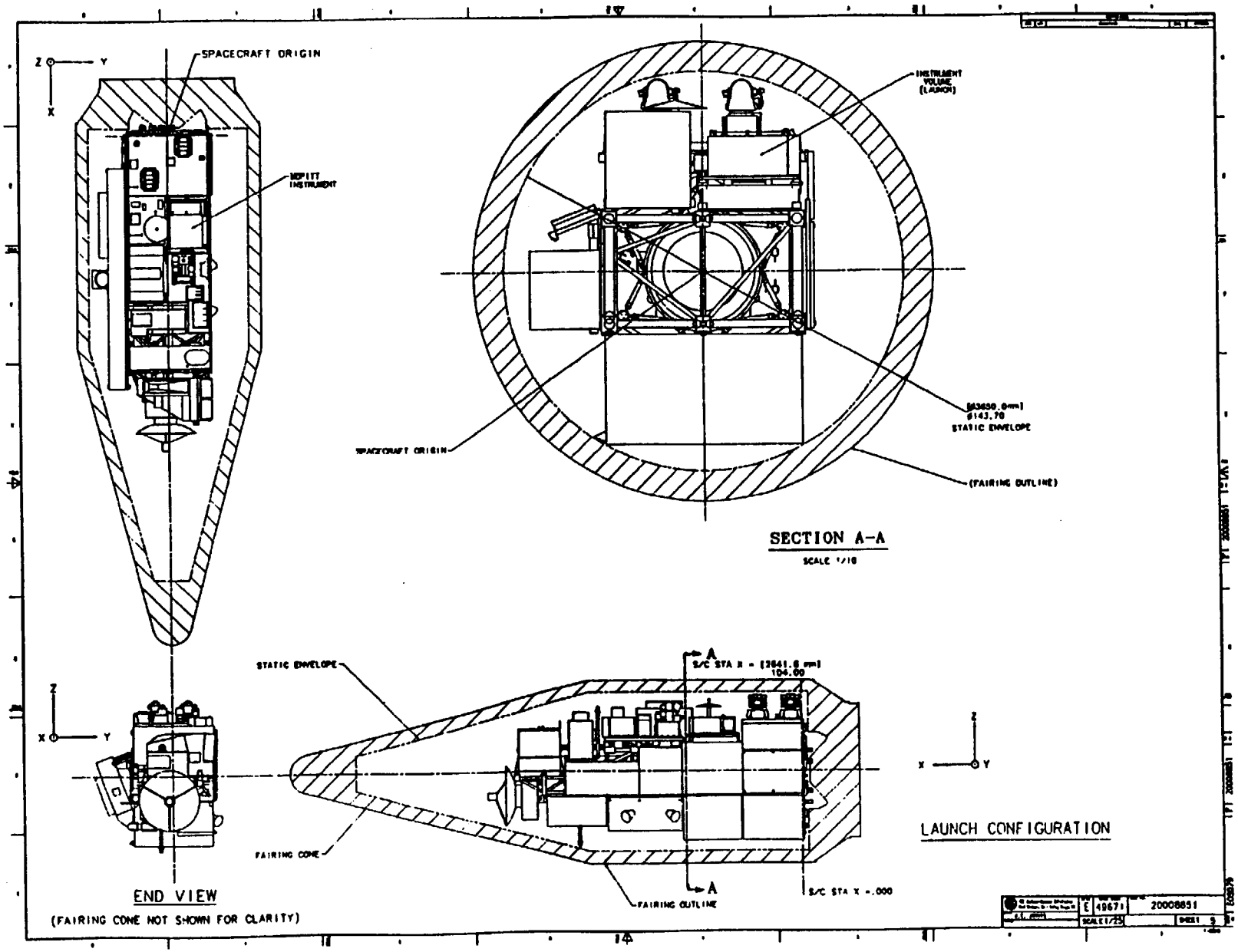

20008851
30 August 1993

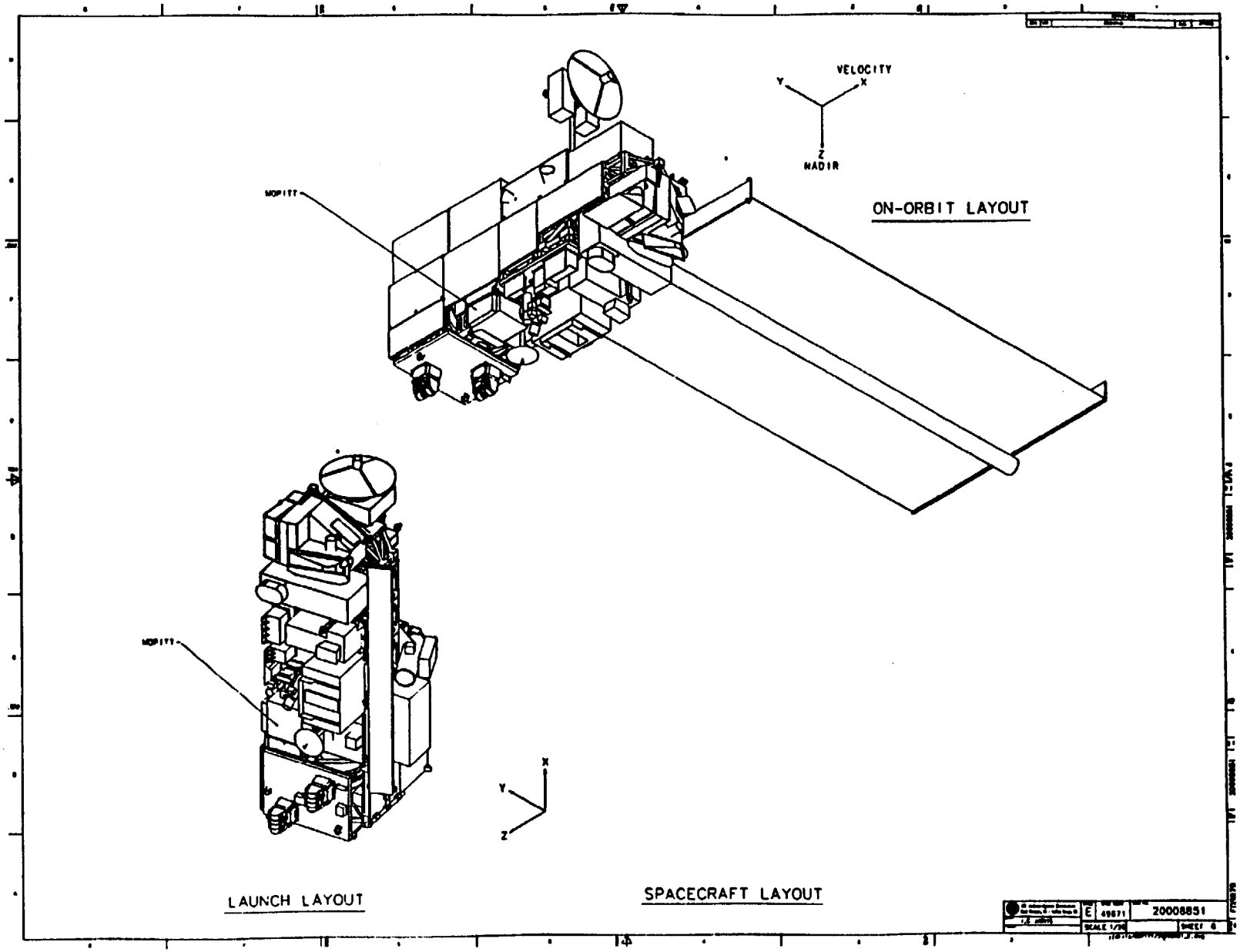
VELOCITY
Y
X
Z
NADIR
MOPITT
ON-ORBIT LAYOUT
MOPITT
Y
X
Z
LAUNCH LAYOUT
SPACECRAFT LAYOUT
E
20008851

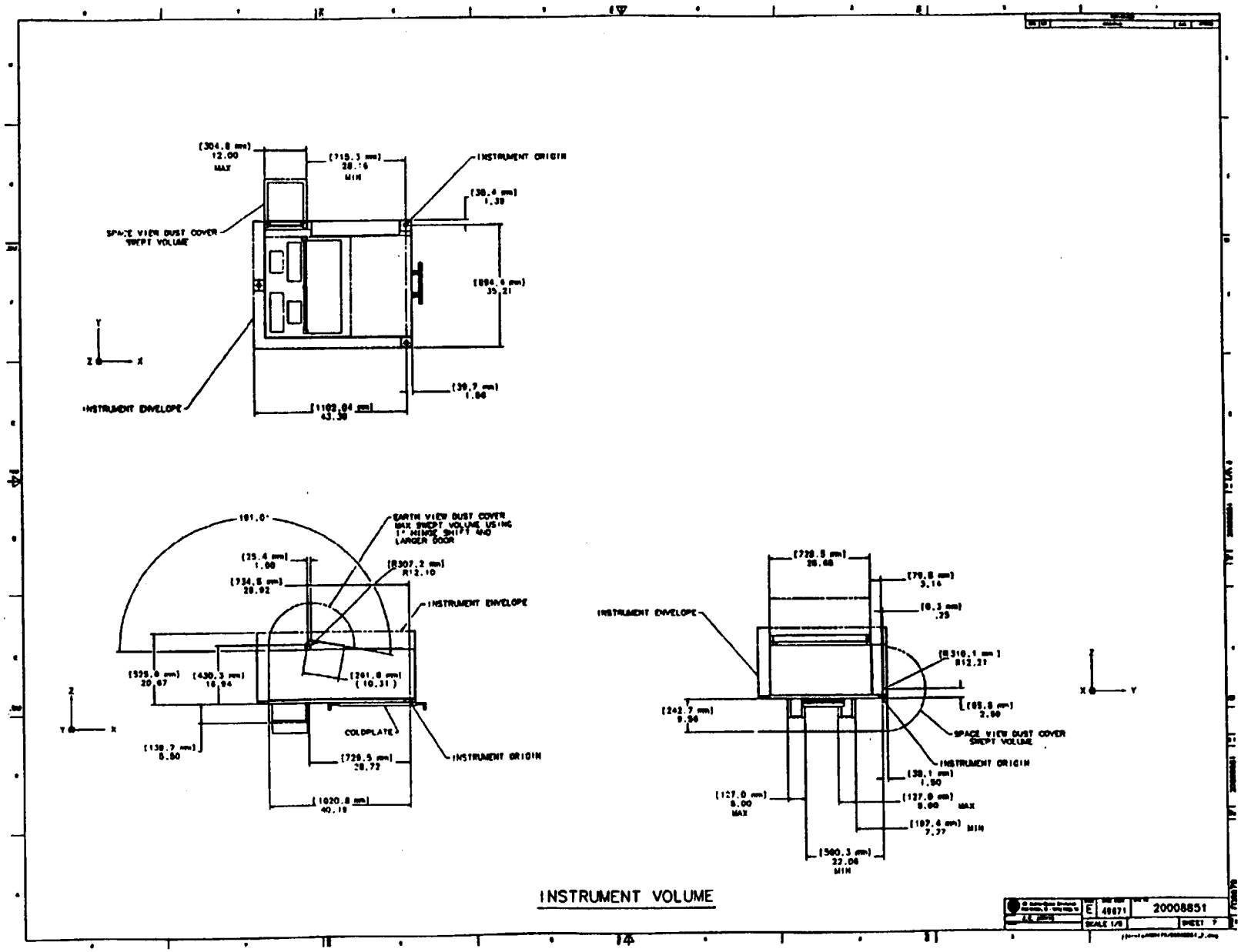

20008851
30 August 1993

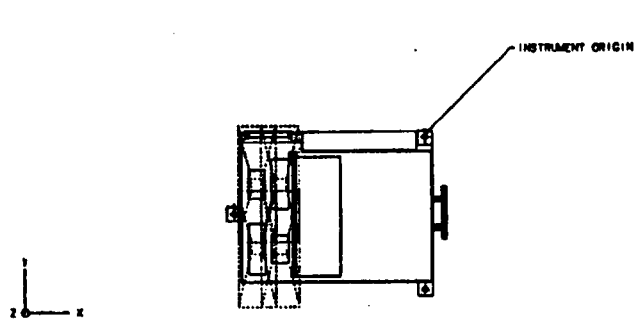

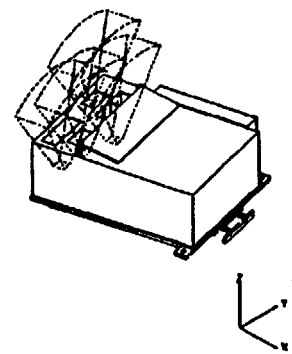

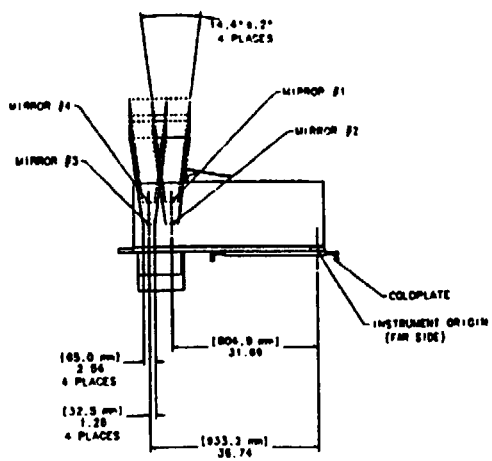

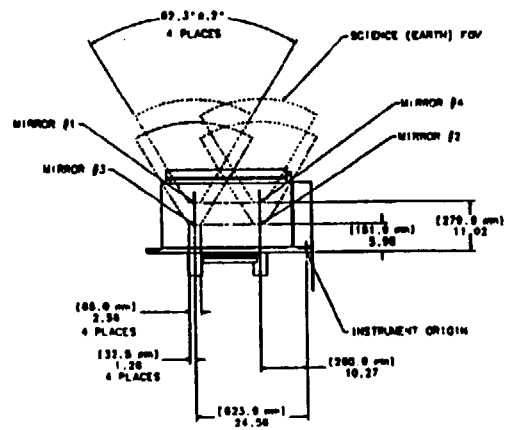

SCIENCE (EARTH) FIELDS OF VIEW

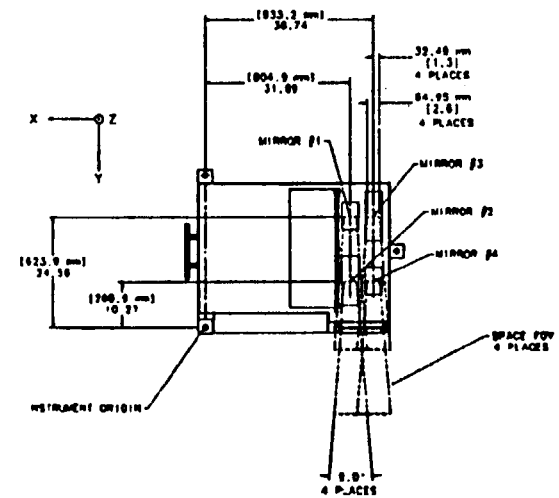

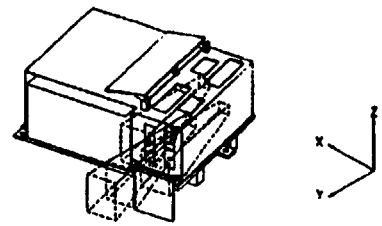

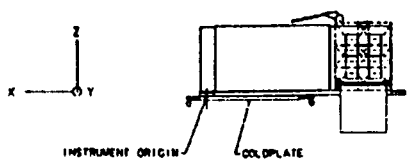

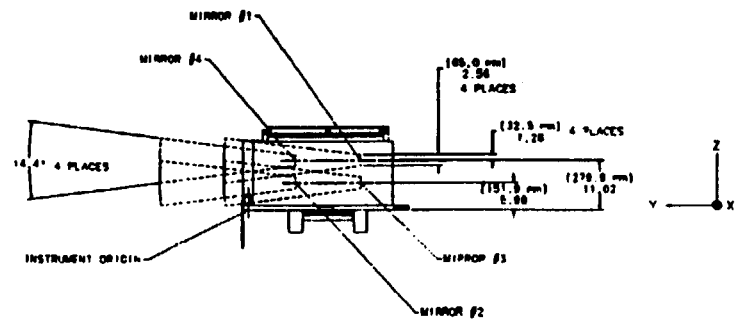

CALIBRATION (SPACE) FIELDS OF VIEW

E | 49671 | 20008851
SCALE 1/6 | SHEET 9

20008851
30 August 1993

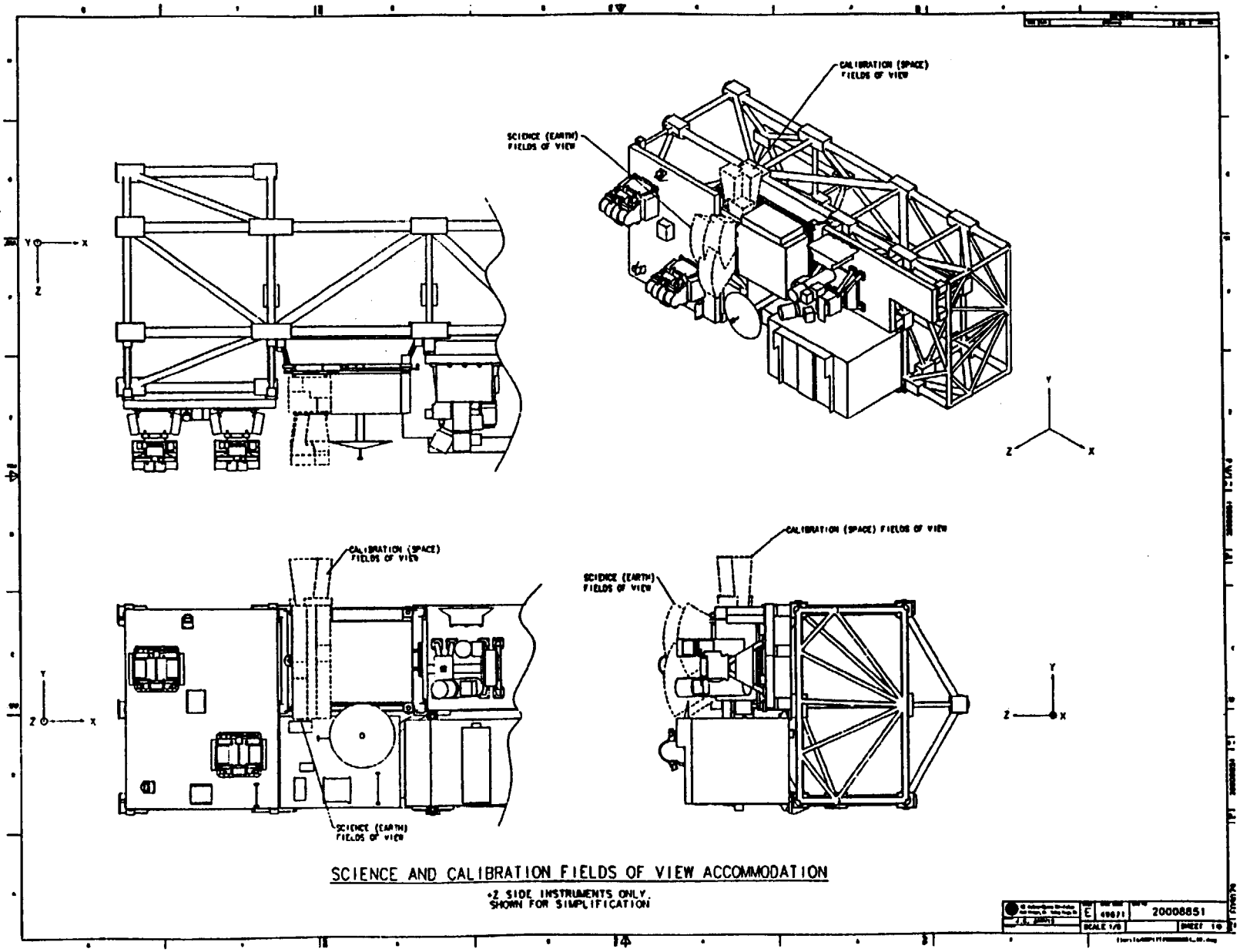

SCIENCE AND CALIBRATION FIELDS OF VIEW ACCOMMODATION

*2 SIDE INSTRUMENTS ONLY, SHOWN FOR SIMPLIFICATION

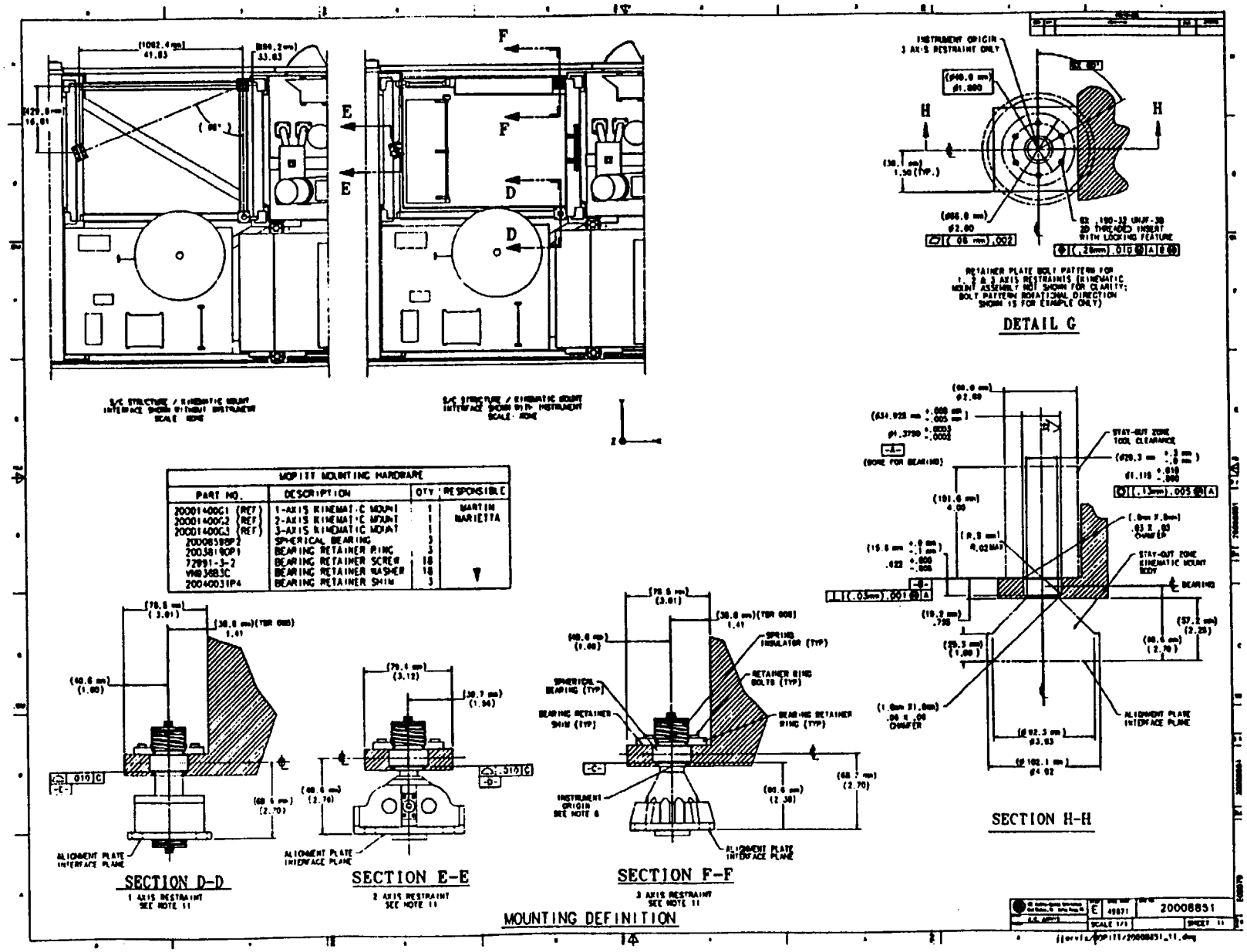

MOPITT MOUNTING HARDWARE			
PART NO.	DESCRIPTION	QTY	RESPONSIBLE
20001400G1 (REF)	1-AXIS KINEMATIC MOUNT	1	MARTIN MARIETTA
20001400G2 (REF)	2-AXIS KINEMATIC MOUNT	1	
20001400G3 (REF)	3-AXIS KINEMATIC MOUNT	1	
20008589P2	SPHERICAL BEARING	3	
20038180P1	BEARING RETAINER RING	3	
72991-3-2	BEARING RETAINER SCREW	18	
VM83883C	BEARING RETAINER WASHER	18	
20040031P4	BEARING RETAINER SHIM	3	

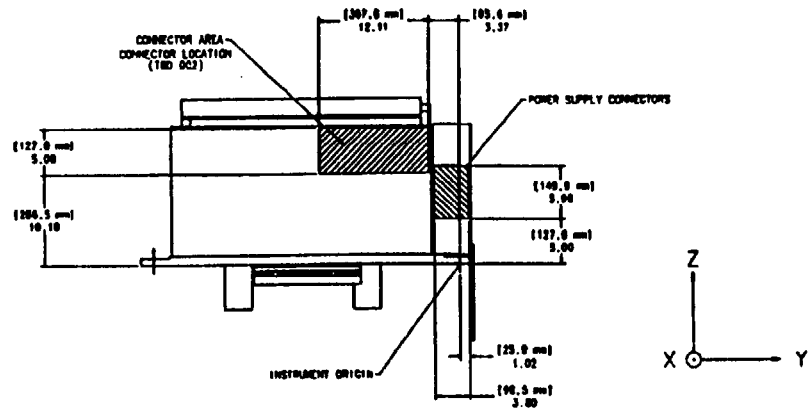

ELECTRICAL HARDWARE DEFINITION

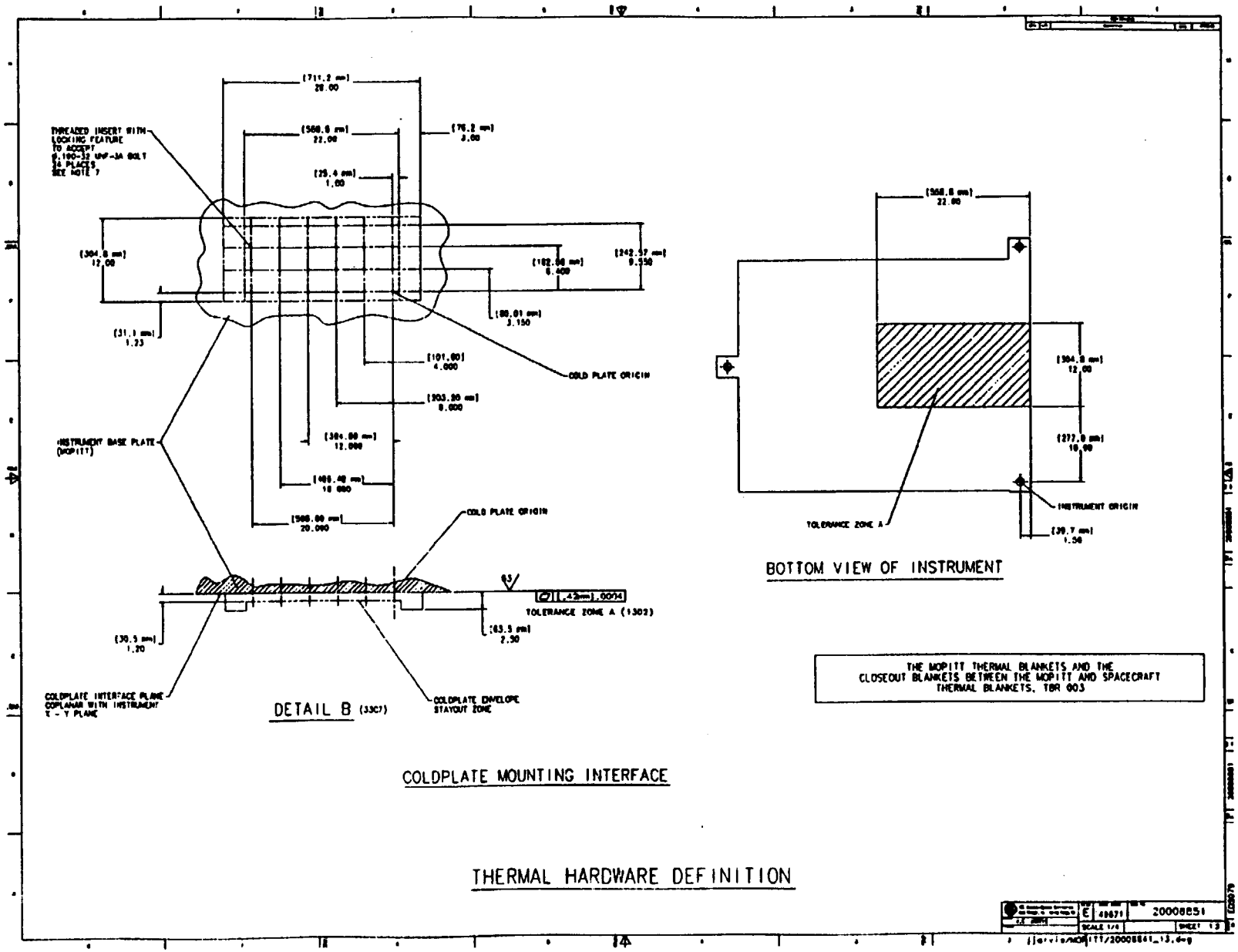

20008851
30 August 1993

(TBD 004)

SHEET 16 WILL DESCRIBE THE ATTACHMENT OF THE FOLLOWING INSTRUMENT GROUND SUPPORT EQUIPMENT:

VIBRATION/HANDLING FIXTURE
LIFTING SLING

GROUND SUPPORT EQUIPMENT ATTACHMENT

TBD LOG					
ITEM	SHEET	ZONE	SUBJECT	RESPONSIBLE	DUE
TBD 001	3	E6	OPTICAL ALIGNMENT GUIDE LOCATION	COM DEV	MOPITT PDR
TBD 002	12	F8	CONNECTOR LOCATION	COM DEV	MOPITT PDR
TBD 003	13	-	THERMAL HARDWARE DEFINITION	MARTIN MARIETTA	S/C PDR ~29 DEC
TBD 004	14	-	ENCLOSE SUPPORT EQUIPMENT ATTACHMENT DEFINITION	COM DEV	MOPITT PDR

TBD LOG

E 49671 20008851

SCALE +/- SHEET 16

||orvis/MOPITT/20008841_16.dwg

Next Assembly	Used on
20008850	EOS–AM

First Application
EOS–AM

Revisions		Rev 001	
Ltr	Description	Date	Approved
001	Draft	8/10/93	CM/GSR

Revision Record Continued on Sheet _____

Contract No.	NAS5–32500
Written	R. Thomas
Date	
Approved	F. Komro
Date	
Approved	
Date	
Issued	G. Rauscher
Date	

MARTIN MARIETTA
POST OFFICE BOX 800
PRINCETON, NEW JERSEY 08543–0800
TELEPHONE (609) 490–3400

Interface Control Drawing, Mechanical, Tables, Earth Observing System AM Spacecraft to Measurements of Pollution in The Troposphere

Size	Code Ident No.	
A	49671	20008852

PURPOSE

The Mechanical Interface Control Drawing (MICD) Tables, 20008852, when executed, in conjunction with the MICD Drawing, 20008851, represent an agreement of the detailed implementation of the mechanical interface between the Earth Observing System (EOS) AM Spacecraft and the Measurement Of Pollution In The Troposphere (MOPITT) instrument. These two drawings, together with Thermal Interface Control Drawing (TICD), 20008853; the Electrical Interface Control Drawing (EICD) Schematic, 20008854; EICD Tables, 20008855; Integration and Test Interface Control Drawing (I&T ICD), 20008856; and Command and Telemetry Interface Control Drawing (C&T ICD), 20008857; describe the details of the interfaces between the EOS–AM Spacecraft and MOPITT. The top–level instrument Interface Control Drawing (ICD), 20008850, provides the instrument ICD tree and revision status for all sub–tier instrument ICDs.

SCOPE

The MICD Tables in conjunction with the MICD Drawings contain information necessary to develop the spacecraft configuration, for structural and mechanical studies, and during I&T for verification of installation and alignment. The MICD Tables describe the instrument mass properties; mechanisms; finite element model (FEM); flight and launch accountability kit items; and alignment data. The MICD Drawing contains the instrument component outline drawings; science and calibration fields of view; mounting, electrical, and thermal hardware definition; and instrument ground support equipment attachment.

Approval Signatures

**IN ADDITION TO ECN AND CCB APPROVALS,
ALL CHANGES ON THIS DRAWING SHALL HAVE THE APPROVAL AND THE FULL AGREEMENT OF THE PARTIES LISTED BELOW.**

REV	Spacecraft Program Office	Date	Instrument Program Office	Date	Instrument Contractor	Date	Principal Investigator	Date
	(signature on file) M. Kavka	8/25/93	R. Colley		J. Dorey		J. Drummond	

Size A | Code Ident No. 49671 | 20008852 | Sheet 3

ASD-EW 2051 3-89

Table of Contents

Section	Title	Sheet
	PURPOSE	2
	SCOPE	2
	Approval Signatures	3
	MICD TABLES	11

List of Figures

Figure No.	Title	Sheet
1	Coordinate System	12
2a–1	Pressure Modulation Cell Torque versus Time Profile	23
2a–2	Pressure Modulation Cell Linear Force versus Time Profile	24
2b–1	Length Modulation Cell Torque versus Time Profile	25
2b–2	Length Modulation Cell Angular Momentum Profile	26
2c–1	Scan Motor Drive Mechanism Torque versus Time Profile	27
2c–2	Scan Motor Drive Mechanism Angular Momentum Profile	28
2d–1	Chopper Torque versus Time Profile	29
2d–2	Chopper Linear Force versus Time Profile	30
2e–1	Stirling Cycle Cooler Compressor Torque and Linear Force Characteristics	31
2f–1	Stirling Cycle Cooler Displacer Torque and Linear Force Characteristics	32
2g–1	Earth Port Cover Torque versus Time Profile	33
2g–2	Earth Port Cover Angular Momentum Profile	34
2h–1	Space Port Cover Torque versus Time Profile	35
2h–2	Space Port Cover Angular Momentum versus Time Profile	36
3	Location of mechanisms	37

List of Tables

Table No.	Title	Sheet
I	Origin Reference Coordinates	12
IIa	Mass Properties – Launch [/Stowed] Configuration	13
IIb	Mass Properties – On–Orbit Configuration	14
IIIa	Mechanism Characteristics – Pressure Modulation Cells	15
IIIb	Mechanism Characteristics – Length Modulation Cells	16
IIc	Mechanism Characteristics – Scan Motor Drive Mechanisms	17
IId	Mechanism Characteristics – Chopper Mechanisms	18
IIe	Mechanism Characteristics – Stirling Cycle Cooler Compressors	19
IIf	Mechanism Characteristics – Stirling Cycle Cooler Displacers	20
IIg	Mechanism Characteristics – Earth Port Cover	21
IIh	Mechanism Characteristics – Space Port Cover	22
IV	Finite Element Model	38
V	MOPITT Flight Items	39
VI	Launch Accountability Kit	40
VII	Alignment Data	41
VIII	Reference Documents	42

TBD LOG

ITEM	SECTION	PAGE	SUBJECT	RESPONSIBLE	DUE
TBD 001	Figure 1	11	Launch Vehicle Coordinate System	MMC	Launch Vehicle Announcement + 26 Weeks
TBD 002	Table I	11	Launch Vehicle Coordinates of MOPITT	MMC	Launch Vehicle Announcement + 26 Weeks
TBD 004	Table IIa	13	Mass Properties– Launch Configuration Inertia Matrix Resolution	COM DEV	MOPITT PDR + 3 Weeks
TBD 006	Table IIa	14	Mass Properties–On–Orbit Configuration Inertia Matrix Resolution	COM DEV	MOPITT PDR + 3 Weeks
TBD 008	Table IIIa	15	Mechanism Characteristics– Pressure Modulation Cells– Axis of Rotation	COM DEV	MOPITT PDR + 3 Weeks
TBD 009	Table IIIa	15	Mechanism Characteristics– Pressure Modulation Cells– Inertia	COM DEV	MOPITT PDR + 3 Weeks
TBD 010	Table IIIa	15	Mechanism Characteristics– Pressure Modulation Cells– Maximum Impulse	COM DEV	MOPITT PDR + 3 Weeks
TBD 014	Table IIIb	16	Mechanism Characteristics–Length Modulation Cells– Inertia	COM DEV	MOPITT PDR +3 Weeks
TBD 015	Table IIIb	16	Mechanism Characteristics–Length Modulation Cells– Maximum Impulse	COM DEV	MOPITT PDR +3 Weeks

TBD LOG

ITEM	SECTION	PAGE	SUBJECT	RESPONSIBLE	DUE
TBD 018	Table IIIc	17	Mechanism Characteristics–Scan Mirror Mechanisms–Maximum Impulse	COM DEV	MOPITT PDR +3 Weeks
TBD 021	Table IIId	18	Mechanism Characteristics–Chopper Mechanisms–Axis of rotation	COM DEV	MOPITT PDR +3 Weeks
TBD 023	Table IIId	18	Mechanism Characteristics–Chopper Mechanisms–Maximum Impulse	COM DEV	MOPITT PDR +3 Weeks
TBD 025	Table IIIe	19	Mechanism Characteristics–Stirling Cycle Cooler Compressors–Majority of Tablee	COM DEV	MOPITT PDR +3 Weeks
TBD 026	Table IIIf	20	Mechanism Characteristics–Stirling Cycle Cooler Displacers–Majority of Tablee	COM DEV	MOPITT PDR +3 Weeks
TBD 027	Table IIIg	21	Mechanism Characteristics–Earth Port Cover – Majority of Tablee	COM DEV	MOPITT PDR +3 Weeks
TBD 028	Table IIIh	22	Mechanism Characteristics–Space Port Cover – Majority of Tablee	COM DEV	MOPITT PDR +3 Weeks
TBD 029	Figure 2a–1	23	Pressure Modulation Cell Torque Versus Time Profilee	COM DEV	MOPITT PDR +3 Weeks
TBD 030	Figure 2a–2	24	Pressure Modulation Cell Angular Momentum Versus Time Profilee	COM DEV	MOPITT PDR +3 Weeks
TBD 031	Figure 2b–1	25	Length Modulation Cell Torque Versus Time Profilee	COM DEV	MOPITT PDR +3 Weeks
TBD 032	Figure 2b–2	26	Length Modulation Cell Angular Momentum VersusTime Profilee	COM DEV	MOPITT PDR +3 Weeks
TBD 033	Figure 2c–1	27	Scan MirrorTorque Versus Time Profilee	COM DEV	MOPITT PDR +3 Weeks
TBD 034	Figure 2c–2	28	Scan Mirror Angular Momentum Versus Time Profilee	COM DEV	MOPITT PDR +3 Weeks

* Where the majority of the table information is TBD, the entire table has been identified as TBD in the table title. Table information will be filled in as it becomes available.

TBD LOG

ITEM	SECTION	PAGE	SUBJECT	RESPONSIBLE	DUE
TBD 035	Figure 2d–1	29	Chopper Torque Versus Time Profile	COM DEV	MOPITT PDR + 3 Weeks
TBD 036	Figure 2d–2	30	Chopper Linear Force Versus Time Profile	COM DEV	MOPITT PDR + 3 Weeks
TBD 037	Figure 2e–1	31	Stirling Cycle Cooler Compresser Torque Versus Frequency Profile	COM DEV	MOPITT PDR + 3 Weeks
TBD 038	Figure 2e–2	32	Stirling Cycle Cooler Compresser Linear Force Versus Frequency Profile	COM DEV	MOPITT PDR + 3 Weeks
TBD 039	Figure 2f–1	33	Stirling Cycle Cooler Displacer Torque Versus Frequency Profile	COM DEV	MOPITT PDR + 3 Weeks
TBD 040	Figure 2f–2	34	Stirling Cycle Cooler Displacer Linear Force Versus Frequency Profile	COM DEV	MOPITT PDR + 3 Weeks
TBD 041	Figure 2g–1	35	Earth Port Cover Torque Versus Time Profile	COM DEV	MOPITT PDR + 3 Weeks
TBD 042	Figure 2g–2	36	Earth Port Cover Angular Momentum Versus Time Profile	COM DEV	MOPITT PDR + 3 Weeks
TBD 043	Figure 2h–1	37	Space Port Cover Torque Versus Time Profile	COM DEV	MOPITT PDR + 3 Weeks
TBD 044	Figure 2h–2	38	Space Port Cover Angular Momentum Versus Time Profile	COM DEV	MOPITT PDR + 3 Weeks
TBD 045	Table V	40	MOPITT Flight Items – Entire Table	COM DEV	MOPITT PDR + 3 Weeks
TBD 046	Table VI	41	Launch Accountability Kit – Entire Table	COM DEV	MOPITT PDR + 3 Weeks
TBD 047	Table VII	42	Alignment Data – Entire Table	COM DEV & MMC	MOPITT PDR + 3 Weeks

* Where the majority of the table information is TBD, the entire table has been identified as TBD in the table title. Table information will be filled in as it becomes available.

TBR LOG

ITEM	SECTION	PAGE	SUBJECT	RESPONSIBLE	DUE
TBR 001	Table IIa	13	Mass Properties–Launch Configuration Center of Mass & Inertia Matrix	COM DEV	MOPITT PDR + 3 Weeks
TBR 002	Table IIa	14	Mass Properties–On–Orbit Configuration Center of Mass &Inertia Matrix	COM DEV	MOPITT PDR + 3 Weeks

MICD TABLES

1. The relationship among the instrument, spacecraft, and launch vehicle coordinate systems is shown pictorially in Figure 1.

2. The conversion among coordinate systems at the instrument origin is shown in Table I.

3. Launch and on–orbit configuration mass properties are shown in Tables IIa and IIb.

4. The MOPITT mechanisms are listed below. Mechanism characteristics are provided in Table III. Corresponding torque, linear force versus time, and angular momentum profiles are provided in the Figure 2 identified by the same lower case alpha character.
   a. Pressure Modulation Cells
   b. Length Modulation Cells
   c. Scan Mirror Mechanisms
   d. Chopper Mechanisms
   e. Stirling Cycle Cooler Compressors
   f. Stirling Cycle Cooler Displacers
   g. Earth Port Cover
   h. Space Port Cover

5. The finite element model which will be used by both the Instrument and Spacecraft Providers is identified in Table IV.

6. The instrument and associated spacecraft flight items are listed in Table V.

7. The contents of the launch accountability kit are identified in Table VI for both flight and non–flight items.

   The launch accountability kit contains each item not installed prior to shipment to the launch site and which must be installed before flight. Space is allocated for each item which must be removed before flight. Thus the launch accountability kit provides the means to verify that all items which must be installed before flight have been installed and all items which must be removed before flight have been removed.

8. The alignment offset among the instrument boresight, all alignment cubes, and the instrument and drill template mounting plane and hole pattern is shown in Table VII.

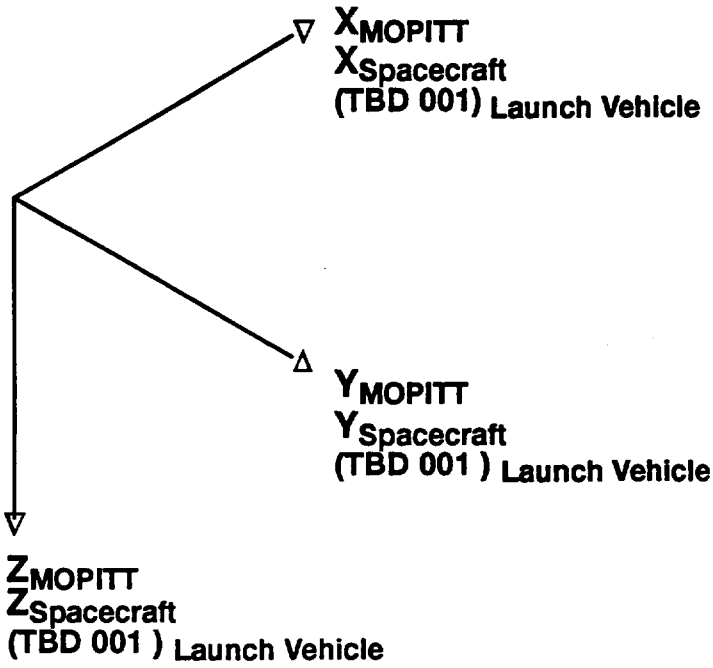

Figure 1. Coordinate System

Table I. Origin Reference Coordinates

Local Coordinate System	Coordinates (mm)		
MOPITT (See Note 1)	X_{MOPITT}=0.00	Y_{MOPITT}=0.00	Z_{MOPITT}=0.00
Spacecraft (See Note 1)	$X_{S/C}$ = + 252.15	$Y_{S/C}$ = +85.90	$Z_{S/C}$ = + 84.00
Launch Vehicle	$X_{Launch\ Vehicle}$ = (TBD 002)	$Y_{Launch\ Vehicle}$ = (TBD 002)	$Z_{Launch\ Vehicle}$ = (TBD 002)

Notes:

1. See 20008851, Sheet 1 for location of instrument origin. The location of the instrument origin is measured with respect to the S/C origin.

Table IIa. Mass Properties – Launch/Stowed Configuration (TBR001) (See Note 2)

Mass (kg) (See Note 3)	(%) (E)stimated (C)alculated (M)easured	Estimated Center of Mass (mm) (See Notes 3 & 4)
164	100 E	X = – 460.40 Y = – 436.24 Z = 120.09

Estimated Inertia Matrix (kg–m^2) ± (TBD 004)% (See Notes 3 & 5)		
I_{XX} = 11.21	I_{XY} = 0.09	I_{XZ} = –0.41
I_{YX} = 0.09	I_{YY} = 17.53	I_{YZ} = 0.00
I_{ZX} = –0.41	I_{ZY} = 0.00	I_{ZZ} = 23.17

Notes:

2. Launch/stowed configuration mass properties as of 7/14/93
3. Mass, center of mass, moments of inertia, and products of inertia in launch/stowed configuration at end of life are the same as in launch/stowed configuration at beginning of life. The center of mass, moments of inertia and products of inertia include the 6.13 Kg coldplate. The mass specified is the mass of the instrument alone.
4. Center of mass is specified with respect to instrument origin.
5. Instrument moments and products of inertia are specified about axes parallel to the instrument axes and passing through the instrument center of mass.

Table IIb. Mass Properties – On–Orbit Configuration (TBR001) (See Note 6)

Mass (kg) (See Note 6)	(%) (E)stimated (C)alculated (M)easured	Estimated Center of Mass (mm) (See Notes 4 & 7)
164	100 E	X = – 460.40 Y = – 436.24 Z = 120.09

Estimated Inertia Matrix (kg–m^2) ± (TBD 006)% (See Notes 5 & 7)		
I_{XX} = 11.38	I_{XY} = 0.20	I_{XZ} = –0.15
I_{YX} = 0.20	I_{YY} = 17.12	I_{YZ} = 0.00
I_{ZX} = –0.15	I_{ZY} = 0.00	I_{ZZ} = 22.82

Notes:

6. On–orbit (all doors deployed) configuration mass properties as of 7/14/93
7. Mass, center of mass, moments of inertia, and products of inertia in on–orbit configuration at end of life are the same as in on–orbit configuration at beginning of life. The location of the on–orbit center of mass is within a 5mm radius of its location. The center of mass, moments of inertia and products of inertia include the 6.13 Kg coldplate. The mass specified is the mass of the instrument alone.

Table IIIa. Mechanism Characteristics – Pressure Modulation Cells

Location	See Figure 3
Operation	Continuous with a linear motion along the instrument X axis. There are two pressure modulation cells and pressure modulation is achieved by the two pistons moving in opposition with each other along a common axis. PMC 1 oscillates at 42 Hz and PMC 2 oscillates at 52 Hz.
Mass being moved (kg) (M)easured, (C)alculated, (E)stimated	0.030 (Each Cell) C
Axis of linear motion (with respect to instrument origin (mm)	Along the instrument X axis
PMC 1 **Center of mass (mm)** **(with respect to instrument origin)** (M)easured, (C)alculated, (E)stimated	X= 524 Y= 29 C Z= 139
PMC 1 **Axial force – [Along the X axis] (N)**	0.02
PMC 2 **Center of mass (mm)** **(with respect to instrument origin)** (M)easured, (C)alculated, (E)stimated	X= 524 Y= 608 C Z= 139
PMC 2 **Axial force – [Along the X axis] (N)**	0.17
Inertia (kg–m^2) Along the X axis	**(TBD 009)**
Maximum Impulse (N–m–sec)	**(TBD 010)**
Finite Element Model Node Numbers	396412–396413
Mechanism profiles	See Figures 2a–1 & 2a–2

Table IIIb. Mechanism Characteristics – Length Modulation Cells

Location	
Operation	Continuous rotation about the instrument Y axis. There are four length modulation cells arranged in two counter rotating pairs. Each LMC is rotating at 690 rpm ± 30 rpm.
Mass being moved (kg) (M)easured, (C)alculated, (E)stimated	0.250 (Each Cell) C
Axis of rotation (with respect to instrument origin (mm)	About instrument Y Axis
LMC 1 **Center of mass about point of rotation (mm) (with respect to instrument origin)** (M)easured, (C)alculated, (E)stimated	X= 421 Y= 162 C Z= 89
LMC 2 **Center of mass about point of rotation (mm) (with respect to instrument origin)** (M)easured, (C)alculated, (E)stimated	X= 421 Y= 473 C Z= 89
LMC 3 **Center of mass about point of rotation (mm) (with respect to instrument origin)** (M)easured, (C)alculated, (E)stimated	X= 465 Y= 162 C Z= 235
LMC 4 **Center of mass about point of rotation (mm) (with respect to instrument origin)** (M)easured, (C)alculated, (E)stimated	X= 524 Y= 473 C Z= 235
Inertia (kg–m^2)(with respect to axis of rotation)	**(TBD 014)**
Maximum Impulse (N–m–sec)	**(TBD 015)**
Finite Element Model Node Number	396410–396411
Mechanism profiles	See Figures 2b–1 & 2b–2

Table IIIc. Mechanism Characteristics –Scan Motor Drive Mechanisms

Location	See Figure 3
Operation	There are 4 scan motor drive mechanisms. Each mechanism consists of a mirror and a stepper motor. In scanning mode, the mirrors rotate about the X axis through 3.6 degrees every 0.4 secs for 14 steps in one direction, then 15 steps in the reverse. For calibration the mirrors rotate through 1 turn in 1 second approximately twice per hour.
Mass being moved (kg) (M)easured, (C)alculated, (E)stimated	0.140 (Each Mirror) C
Axis of rotation (with respect to instrument origin (mm)	About the instrument X axis
Scan Mirror 1 **Center of mass about point of rotation (mm) (with respect to instrument origin)** (M)easured, (C)alculated, (E)stimated	X= 762 Y= 151 C Z= 267
Scan Mirror 2 **Center of mass about point of rotation (mm) (with respect to instrument origin)** (M)easured, (C)alculated, (E)stimated	X= 762 Y= 485 C Z= 139
Scan Mirror 3 **Center of mass about point of rotation (mm) (with respect to instrument origin)** (M)easured, (C)alculated, (E)stimated	X= 891 Y= 151 C Z= 139
Scan Mirror 4 **Center of mass about point of rotation (mm) (with respect to instrument origin)** (M)easured, (C)alculated, (E)stimated	X= 891 Y= 485 C Z= 267
Inertia (kg–m^2)(with respect to axis of rotation)	52.5 x 10^{-6} (per mirror)
Maximum Impulse (N–m–sec)	**(TBD 018)**
Finite Element Model Node Number	396421–396422
Mechanism profiles	See Figures 2c–1 & 2c–2

Table IIId. Mechanism Characteristics – Chopper Mechanisms

Location	See Figure 3
Operation	The Choppers are a pair of vibrating vanes moving in opposition to chop light rays entering the aperture of the LMC.
Mass being moved (kg) (M)easured, (C)alculated, (E)stimated	0.0016
Axis of rotation (with respect to instrument origin) (mm)	About the X axis
Chopper 1 **Center of mass about point of rotation (mm)** **(with respect to instrument origin)** (M)easured, (C)alculated, (E)stimated	X= 600 Y= 123 C Z= 267
Chopper 2 **Center of mass about point of rotation (mm)** **(with respect to instrument origin)** (M)easured, (C)alculated, (E)stimated	X= 600 Y= 513 C Z= 139
Chopper 3 **Center of mass about point of rotation (mm)** **(with respect to instrument origin)** (M)easured, (C)alculated, (E)stimated	X= 662 Y= 123 C Z= 139
Chopper 4 **Center of mass about point of rotation (mm)** **(with respect to instrument origin)** (M)easured, (C)alculated, (E)stimated	X= 662 Y= 513 C Z= 267
Inertia (kg–m^2)(with respect to axis of rotation)	78.40×10^{-11}
Maximum Impulse (N–m–sec)	**(TBD 023)**
Finite Element Model Node Number	396425
Mechanism profiles	See Figures 2d–1 & 2d–2

Table IIIe. Mechanism Characteristics –Stirling Cycle Cooler Compressors (TBD 025)*

Location	See Figure 3
Operation	There are 2 Stirling Cycle Coolers that operate continuously. To minimize vibration the coolers are operated so that the moving pistons of the compressors are phased to offset each other. This is accomplished by the compressors for the two Stirling coolers being aligned along a common axis and move in opposition to each other, thus cancelling the momentum imbalance.
Mass being moved (kg) (M)easured, (C)alculated, (E)stimated	0.165 Each Compressor C
Stirling Cycle Cooler #1 Compressor Center of mass (mm) (with respect to instrument origin) (M)easured, (C)alculated, (E)stimated	X= 207 Y= 217 Z= 93
Stirling Cycle Cooler #2 Compressor: Center of mass (mm) (with respect to instrument origin) (M)easured, (C)alculated, (E)stimated	X= 207 Y= 418 Z= 93
Inertia (kg–m^2)(with respect to axis of rotation)	
Maximum Impulse (N–m–sec)	
Finite Element Model Node Number	396416–396417
Mechanism Profiles	See Figures 2e–1 & 2e–2

Notes:

* Where the majority of the table information is TBD, the entire table has been identified as TBD in the table title. Table information will be filled in as it becomes available.

Table IIIf. Mechanism Characteristics – Stirling Cycle Cooler Displacers (TBD 026)*

Location	See Figure 3
Operation	There are 2 Stirling Cycle Coolers that operate continuously. To minimize vibration the coolers are operated so that the moving pistons of the of the displacers are also phased to offset each other. This is accomplished by the displacers for the two Stirling coolers being aligned along a common axis and move in opposition to each other, thus cancelling the momentum imbalance.
Mass being moved (kg) (M)easured, (C)alculated, (E)stimated	Each Displacer C
Stirling Cycle Cooler #1 Displacer. Center of mass (mm) (with respect to instrument origin) (M)easured, (C)alculated, (E)stimated	X= 316 Y= 214 Z=195
Stirling Cycle Cooler #2 Displacer: Center of mass (mm) (with respect to instrument origin) (M)easured, (C)alculated, (E)stimated	X=316 Y=423 Z=195
Inertia (kg–m^2)(with respect to axis of rotation)	
Maximum Impulse (N–m–sec)	
Finite Element Model Node Number	396416–396417
Mechanism Profiles	See Figures 2f–1 & 2f–2

Notes:

* Where the majority of the table information is TBD, the entire table has been identified as TBD in the table title. Table information will be filled in as it becomes available.

Table IIIg. Mechanism Characteristics – Earth Port Cover (TBD 027)*

Location	See Figure 3
Operation	Intermittent operation during turn–on or transition to and from survival mode.
Mass being moved (kg) (M)easured, (C)alculated, (E)stimated	0.165
Axis of rotation	Y axis
Center of mass about point of rotation (mm) (with respect to instrument origin) (M)easured, (C)alculated, (E)stimated	X= Y= Z=
Inertia (Kg–m^2)	
Maximum Impulse (N–m–sec)	
Cycle duration (Sec)	15
Finite Element Model Node Number	396185–396294
Mechanism Profiles	See Figures 2g–1 & 2g–2

Notes:

* Where the majority of the table information is TBD, the entire table has been identified as TBD in the table title. Table information will be filled in as it becomes available.

Table IIIh. Mechanism Characteristics – Space Port Cover (TBD 028)*

Location	See Figure 3
Operation	Intermittent operation during turn–on or transition to and from survival mode.
Mass being moved (kg) (M)easured, (C)alculated, (E)stimated	
Axis of rotation	X axis
Center of mass about point of rotation (mm) (with respect to instrument origin) (M)easured, (C)alculated, (E)stimated	X= Y= Z=
Inertia (Kg–m^2)	
Maximum Impulse (N–m–sec)	
Cycle duration (Sec)	15
Finite Element Model Node Number	396295–396398
Mechanism Profiles	See Figures 2h–1 & 2h–2

Notes:

* Where the majority of the table information is TBD, the entire table has been identified as TBD in the table title. Table information will be filled in as it becomes available.

(TBD 029)

Figure 2a–1. Pressure Modulation Cell Torque versus Time Profile

(TBD 030)

Figure 2a–2. Pressure Modulation Cell Linear Force versus Time Profile

(TBD 031)

Figure 2b–1. Length Modulation Cell Torque versus Time Profile

(TBD 032)

Figure 2b–2. Length Modulation Cell Angular Momentum Versus Time Profile

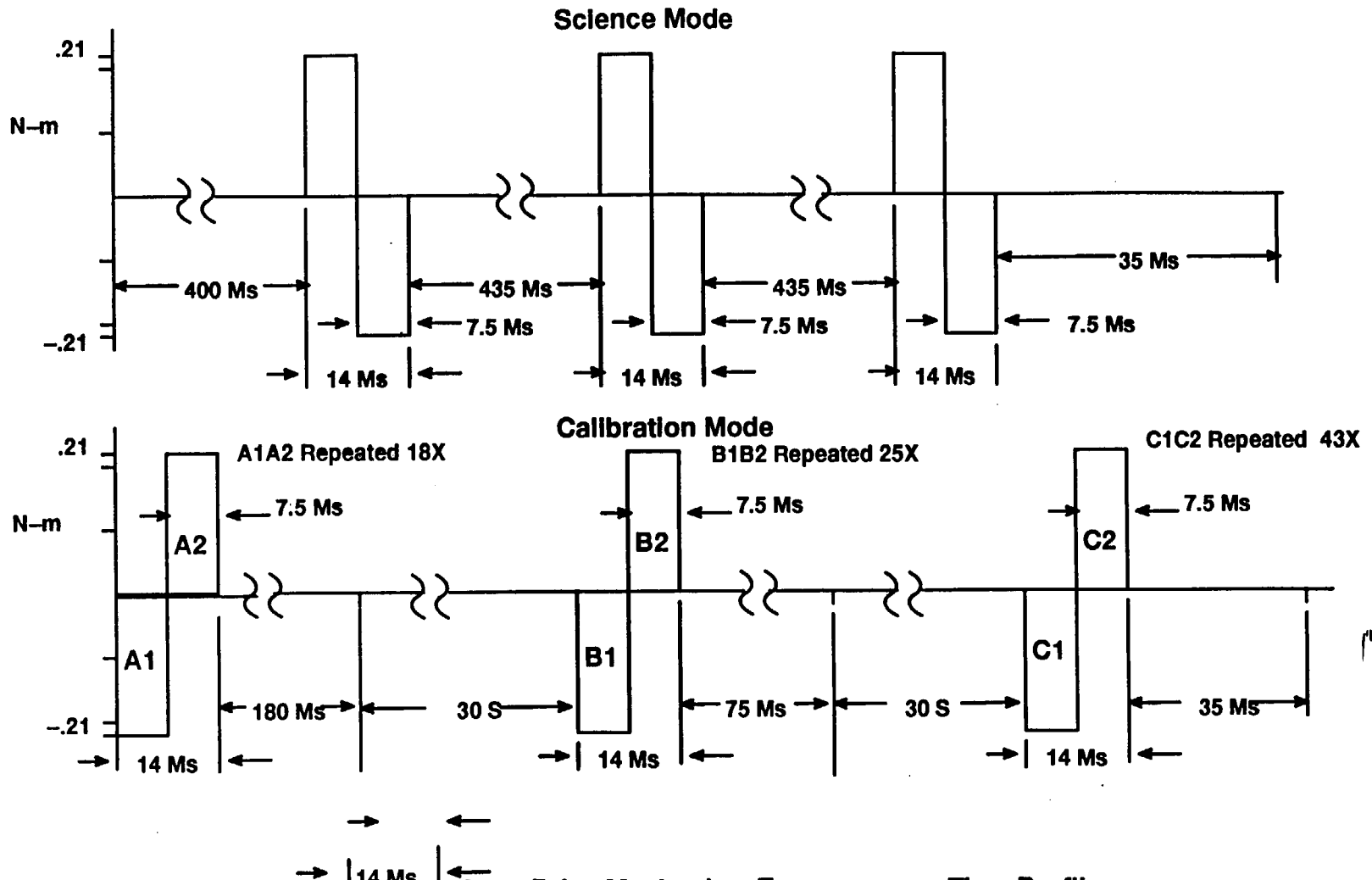

Figure 42Ms-1 Scan Motor Drive Mechanism Torque versus Time Profile

(TBD 034)

Figure 2c–2. Scan Motor Drive Mechanism Angular Momentum Versus Time Profile

(TBD 035)

Figure 2d–1. Chopper Torque versus Time Profile

(TBD 036)

Figure 2d–2. Chopper Linear Force versus Time Profile

Parameter	Frequency of Vibration		
	Fundemental 46 (Hz)	Second Harmonic 92 (Hz)	Third Harmonic 138 (Hz)
Residual Force along X axis (N)	0.1780	0.1780	0.1780
ResidualForce along Y axis (N)	0.1780	0.1780	0.1780
Residual Torque about X axis (N–m)	0.0000	0.0000	0.0000
Torque about Y axis (N–m)	0.0040	0.0070	0.0220

NOTES:

8. MOPITT cooler configuration consists of BAe coolers with Lockeed drive electronics

Figure 2e–1. Stirling Cycle Cooler Compressor Torque and Linear Force Characteristics

Parameter	Frequency of Vibration		
	Fundemental 46 (Hz)	Second Harmonic 92 (Hz)	Third Harmonic 138 (Hz)
Residual Force along X axis (N)	0.0180	0.0180	0.0180
ResidualForce along Y axis (N)	0.0180	0.0180	0.0180
Residual Torque about X axis (N–m)	0.0000	0.0000	0.0000
Residual Torque about Y axis (N–m)	0.0008	0.0015	0.0005

NOTES:

9. MOPITT cooler configuration consists of BAe coolers with Lockeed drive electronics

Figure 2f–1. Stirling Cycle Cooler Displacer Torque and Linear Force Characteristics

(TBD 041)

Figure 2g–1. Earth Port Cover Torque versus Time Profile

(TBD 042)

Figure 2g–2. Earth Port Cover Angular Momentum Versus Time Profile

(TBD 043)

Figure 2h–1. Space Port Cover Torque versus Time Profile

(TBD 044)

Figure 2h–2. Space Port Cover Angular Momentum Versus Time Profile

(TBD 044)

Figure 3. Location of Mechanisms

Size	Code Ident No.		
A	49671	20008852	
			Sheet 37

Table IV. Finite Element Model

	Revision			
	Preliminary	Update		
Date	April 7, 1993	May 6, 1993		
File name (See Note 10)	(1) mopitt2fbd.blk (2) mopittd2fbd.blk	(1) mopittrx2fbd.blk (2) mopittrxd2fbd.blk		
Grid/Element/ Property and Material ID Range	395001 – 399999	395001 – 399999		
Coordinate ID Range	1026 – 1050	1026 – 1050		
First Mode Frequency (Hz) (See Note 10)	(1) 41.9 Hz (2) 41.7 Hz	(1) 41.9 Hz (2) 41.7 Hz		

Notes:

10. (1) Launch Model
    (2) Deployed, on orbit model
11. Node numbers and descriptions for specific nodes in reduced finite element model are as Follows :

Node Number	Description
396421	Scan Motor Drive #1
396422	Scan Motor Drive #2
396400	Optical bench Pt.#1 (Mirror 1)
396401	Optical bench Pt.#2 (Mirror 2)
396402	Optical bench Pt.#3 (Mirror 3)
396403	Optical bench Pt.#4 (Mirror 4)
396404	Optical bench Pt.#5
396405	Optical bench Pt.#6
395006	MOPITT/SC Interface #1
395330	MOPITT/SC Interface #2
395349	MOPITT/SC Interface #3

Table V. MOPITT Flight Items (TBD 045)*

Item	Part No.	Supplier	Qty

Notes:

* Where the majority of the table information is TBD, the entire table has been identified as TBD in the table title. Table information will be filled in as it becomes available.

Table VI. Launch Accountability Kit (TBD 046)*

Item	Drawing #	Flight	Non–Flight

Notes:

* Where the majority of the table information is TBD, the entire table has been identified as TBD in the table title. Table information will be filled in as it becomes available.

Table VII. Alignment Data
(TBD 047)*

From	TO	Alignment Offset (arc–second) (see Note 9)		
		θ_X	θ_Y	θ_Z
Instrument Boresight	Instrument Mounting Plane and Hole Pattern			
Instrument Boresight	Instrument Alignment Cube	Requirement 150 Actual	Requirement 150 Actual	Requirement 150 Actual
Instrument Alignment Cube	Drill Template Alignment Cube			
Drill Template Alignment Cube	Spacecraft Master Reference Cube			
Instrument Alignment Cube	Spacecraft Master Reference Cube			
Spacecraft Master Reference Cube	Spacecraft Earth Frame of Reference			
Instrument Boresight	Spacecraft Earth Frame of Reference	Requirement 300 Actual	Requirement 300 Actual	Requirement 300 Actual

Notes:

12. Entries are offsets between the nominal instrument and spacecraft axes as defined in Figure 1.

* Where the majority of the table information is TBD, the entire table has been identified as TBD in the table title. Table information will be filled in as it becomes available.

Table VIII. Reference Documents

Document Number	Date	Document Title	Source

* Table information will be filled in as required.