# CHAPTER 2

# Preflight Calibration in the Laboratory

# OBJECTIVES

•To provide an absolute calibration of the sensor by reference to NIST standards and to the sun.

•To provide an absolute calibration of the on-board calibrators using the sensor as a transfer radiometer.

•To characterize, to the extent possible, the performance of the sensor and the on-board calibrators.

•To indicate, through the results of these calibrations and characterizations, the degree to which the sensor and the on-board calibrators have met specifications.

# METHODOLOGY

Preflight calibration has four components:

- Traceability to NIST.
- Preflight calibration and characterization tests.
  Characterization tests are addressed in Appendix C.
- Establishing the link to on-orbit calibration.
- Construction and verification of instrument performance models.

# PREFLIGHT CALIBRATION IN THE LABOR^TORY

## PREFLIGHT CALIBRATION DETERMINES TRACEABILITY TO NIST AND THE SUN

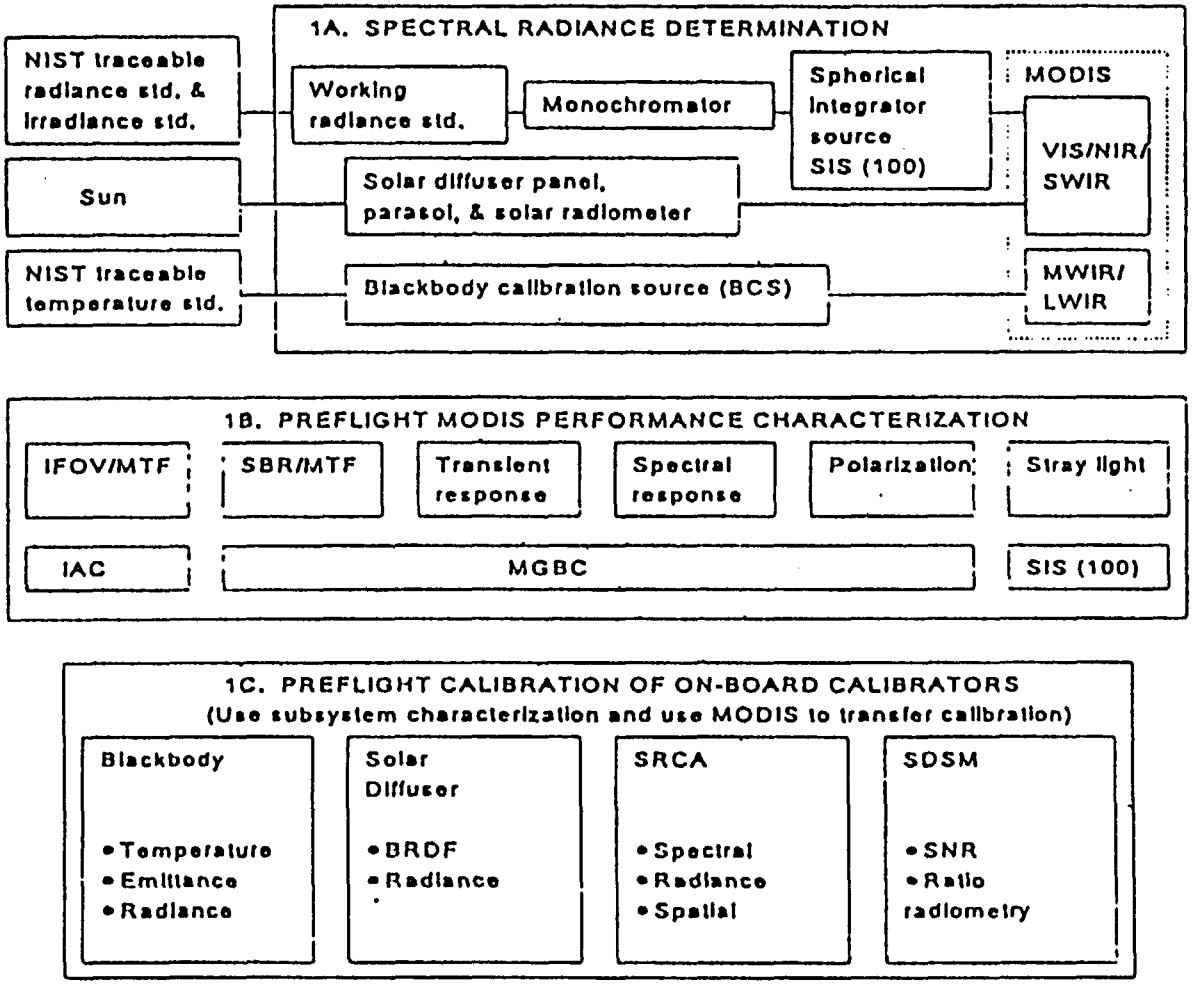


Figure 2.1 MODIS preflight calibration plan

# PREFLIGHT CALIBRATION IN THE LABORATORY

## PREFLIGHT CALIBRATION CONDUCTS CALIBRATION AND CHARACTERIZATION TESTS

- A limited set of system level tests will be performed on the Engineering Model to verify the testing methodology and instrument design.

- A full set of system level tests will be performed on the Protoflight Model (and subsequent flight models) to calibrate and characterize the instrument.

- Tests will be performed in both ambient and thermal vacuum (T/V) conditions to characterize environmental effects such as filter shifts.

- Thermal Vacuum tests will be performed at thermal conditions as close to the instruments' expected environment as possible.

# PREFLIGHT CALIBRATION IN THE LABORATORY

## PREFLIGHT TESTS COVER ALL SPECIFICATION REQUIREMENTS

| TEST PARAMETER | SPEC PARA | TEST PROCEDURE | TEST ENVIRONMENT | SCAN MIRROR STATUS | GSE OPTICAL STIMULI |
|---|---|---|---|---|---|
| SPATIAL - IFOV | 3.3.1 | 152781 | AMB LAB | NON-SCANNING | IAC WITH SLITS |
| RESPONSE UNIFORMITY | 3.4.5.4 | | | | |
| SPECTRAL | 3.3.3 | 152792 | AMB LAB AND T/V | NON-SCANNING | MGBC+MONOCHROMATOR |
| WAVELENGTH TOLERANCE | 3.3.3.2 | | AMB LAB AND T/V | | |
| OUT OF BAND | 3.3.3.3 | | AMB LAB | | |
| RIPPLE | 3.3.3.4 | | AMB LAB AND T/V | | |
| WAVELENGTH STABILITY | 3.4.7.4 | | AMB LAB AND T/V | | |
| WAVELENGTH ACCURACY | 3.4.7.5 | | AMB LAB AND T/V | | |
| POLARIZATION | 3.3.5 | 152793 | AMB LAB | NON-SCANNING | COLLIMATOR +POLARIZER PRISM |
| MTF | 3.4.2 | 152788 | AMB LAB AND T/V | SCANNING | MGBC+SLITS; IAC + SLITS |
| TRANSIENT RESPONSE | 3.4.4 | 152789 | AMB LAB | SCANNING | MGBC+RETICLES |
| RADIOMETRIC PERFORMANCE | 3.4.5 | VIS/NIR/SWIR | AMB LAB AND T/V | SCANNING | SIS(100) AND BCS |
| DYNAMIC RANGE | 3.4.1 | 152784 | | | |
| SNR | 3.4.1 | MWIR/LWIR | | | |
| SYSTEM NOISE MEAS | 3.4.5.5 | 152785 | | | |
| CH TO CH UNIFORMITY | 3.4.5.3.2 | | | | |
| SYSTEM NOISE | 3.4.5.5 | | | | |
| LINEARITY | | | | | |
| SYSTEM CROSSTALK | 3.4.5.3.3 | 152787 | AMB LAB | SCANNING | MGBC + WIDE SLITS |
| GHOSTING | 3.4.5.5 | ( ) | AMB LAB | SCANNING | MGBC + FULL FIELD |
| GEOMETRIC PERFORMANCE | 3.4.6 | | | | |
| POINTING KNOWLEDGE | 3.4.6.1 | 152791 | AMB LAB | NON-SCANNING | MGBC + PTG ASSY |
| ALIGNMENT CHANGE | 3.4.6.2 | 152791 | AMB LAB | NON-SCANNING | MGBC + PTG ASSY |
| SPECTRAL BAND REG | 3.4.6.3 | 152790 | AMB LAB AND T/V | SCANNING | MGBC+SBR RETICLES |
| RADIOMETRIC STABILITY | 3.4.7 | VIS/NIR/SWIR | | SCANNING | |
| SHORT TERM | 3.4.7.1 | 152784 | AMB LAB | | SIS(100) AND BCS |
| LONG TERM | 3.4.7.2 | MWIR/LWIR | ANALYSIS | | NA |
| SPECTRAL BAND TO BAND | 3.4.7.3 | 152785 | AMB LAB AND T/V | | SIS(100) AND BCS |
| STRAY LIGHT | 3.4.8 | | AMB LAB | SCANNING | |
| DIRECT SUNLIGHT | 3.4.8.1 | 152797 | AMB LAB | | SOLAR TEST SOURCE |
| BRIGHT TARGET | 3.4.8.2 | 152794 | AMB LAB | | SIS(100) |
| DARK TARGET | 3.4.8.3 | 152794 | AMB LAB | | SIS(100) |
| WARM TARGET | 3.4.8.4 | 152796 | AMB LAB | | MGBC-TARGET RETICLE |

# PREFLIGHT CALIBRATION IN THE LABORATORY

## CALIBRATION SOURCES

### MODIS GROUND BASED CALIBRATOR (MGBC)

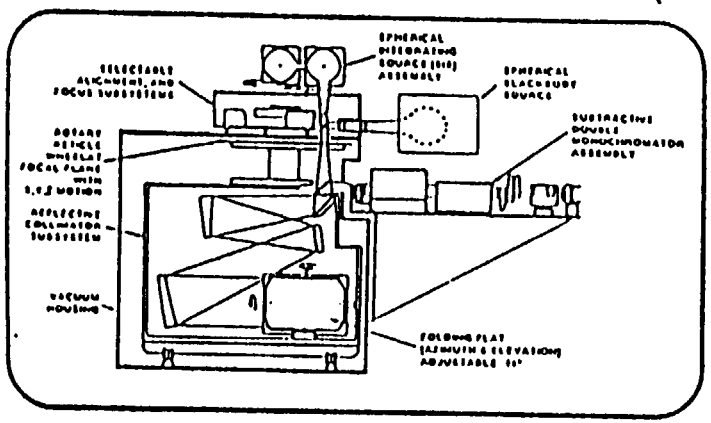

### INTEGRATION & ALIGNMENT COLLIMATOR (IAC)

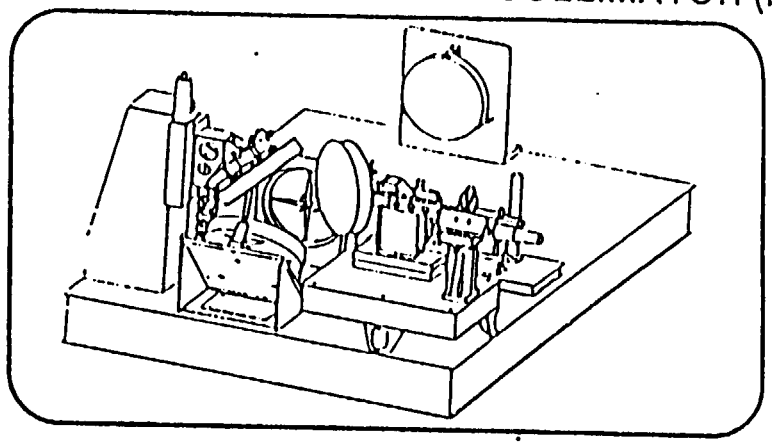

### BLACKBODY CALIBRATION SOURCE (BCS)
### SPACE VIEW SOURCE (SVS)

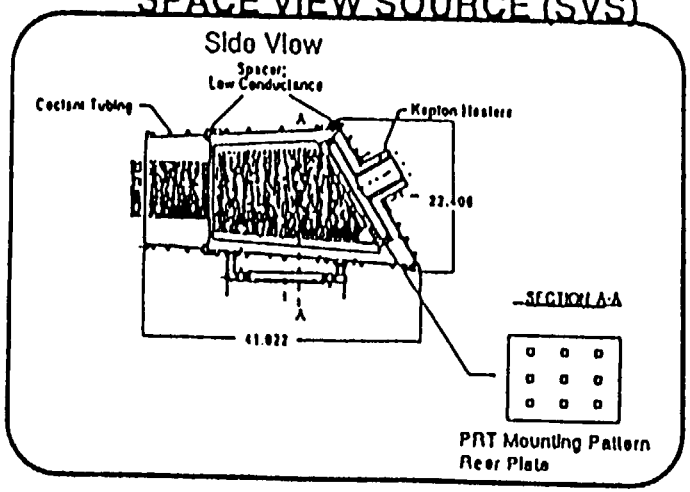


### SPHERICAL INTEGRATING SOURCE (SIS 100)

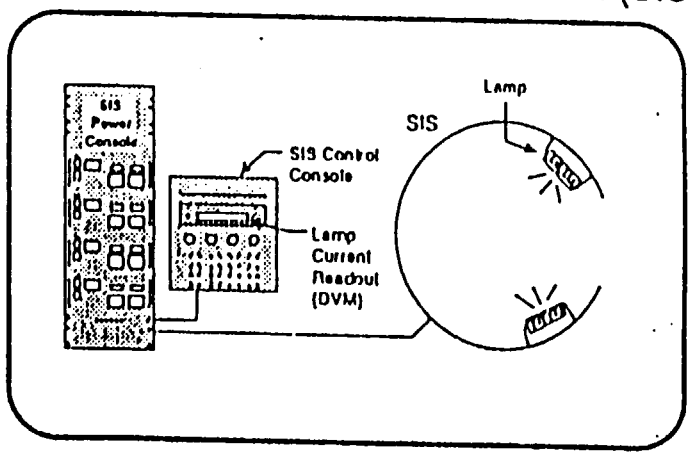

# PREFLIGHT CALIBRATION IN THE LABORATORY

## RADIOMETRIC PERFORMANCE

- Radiometric performance will be measured at the full system level
- Scan mirror operating and the normal DC restoration operation will be used
- Measurements will be made under ambient and vacuum environmental conditions
- Subsets of the tests will be made and distributed across the scan line
- The reflectance region (0.4 to 2.5 μm) and the thermal IR region (3.5 to 14.5 μm) will be independently calibrated

# PREFLIGHT CALIBRATION IN THE LABORATORY

## Reflectance Region
## VIS / NIR /SWIR

- Calibrated Spherical Integration Source (SIS(100)) will be used
- Always be located in ambient laboratory
- SIS(100) completely fills the MODIS solid angle-area
- Spectral radiance levels available with the SIS(100) cover the full dynamic range of bands 1-19, 26
- Dynamic range coverage: minimum 5 levels and most will be > 10 levels
- Multiple runs used to obtain full calibration sets
- These data are used to obtain:

  Responsivity, offset parameters and system noise performance,

  short term stability

  SIS(100) has small nonuniformity effects (< 2%)

  SIS(100) nonuniformity not folded into noise computations

CALIBRATION ACCURACY OF SIS(100) IS 2.8%

# Thermal IR Region (MWIR / LWIR)

- Blackbody Calibration Source(BCS) and the Space View Source (SVS) will be used
- For ambient environment calibration configuration

  BCS temperature range is 290 to 380 K

  SVS temperature is 290 K
- For thermal vacuum environment calibration

  BCS temperature range is 180 to 335 K

  SVS temperature is < 80 K
- All channels of each MWIR and LWIR spectral band will be exercised throughout the spectral band dynamic range
- Data will be collected for BCS and SVS temperatures, scan angle, multiple scan lines, and number of frames for channels of a spectral band
- The responsivity, offset values, and the variation of performance across the scan line are measured
- The NE$\Delta$L and NE$\Delta$T are the normalized standard deviations of spectral band/channel data wherein MODIS is viewing the same portion of BCS and SVS

## CALIBRATION ACCURACY OF BCS/SVS IS 0.5%

# PREFLIGHT CALIBRATION ESTABLISHES THE LINK TO ON-ORBIT CALIBRATION

- The on-board calibrators are calibrated using the MODIS as the transfer.

- The pre-launch and immediate post-launch performance of the calibrators is expected to be consistent, preserving NIST traceability.

- Key in-flight uncertainties will have been measured.

# IN-FLIGHT RADIOMETRIC ACCURACY DEPENDS ON PRE-FLIGHT CHARACTERIZATION AND SRCA/SDSM

HUGHES
SANTA BARBARA RESEARCH CENTER
a subsidiary

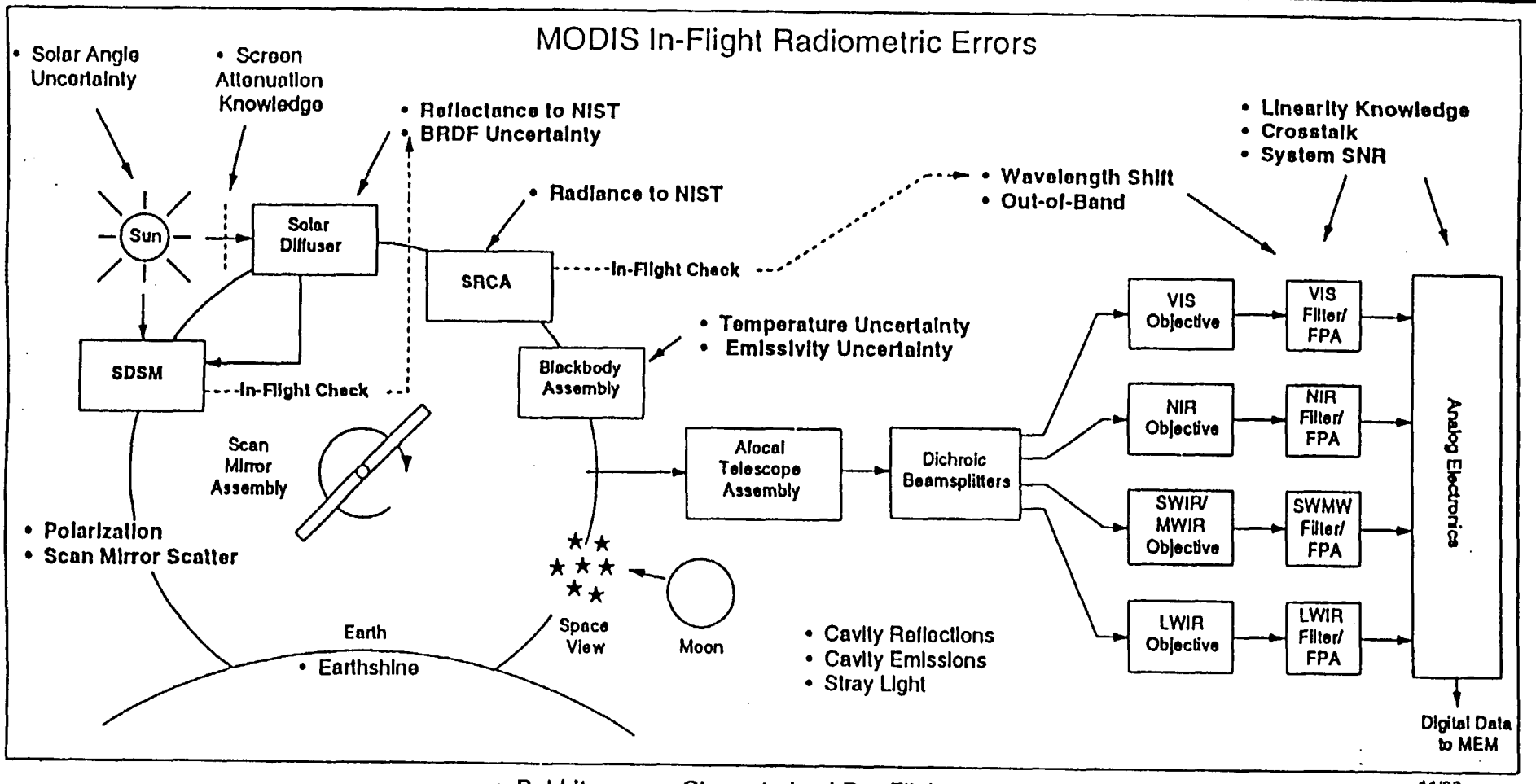


• Bold Items are Characterized Pre-Flight

11/93
93-0868-137

# PREFLIGHT CALIBRATION IN THE LABORATORY

## THE FORM OF THE CALIBRATION CURVE WILL BE DETERMINED IN THERMAL VACUUM TESTS

Any nonlinear terms will be identified.

The non-linear coefficient will be determined pre-launch. Post-launch measurements of the non-linear term (with heated blackbody, the other SD level, or non-ideal SRCA lamp levels) will be limited in their dynamic range.

Temperature dependency of the coefficients will be measured.

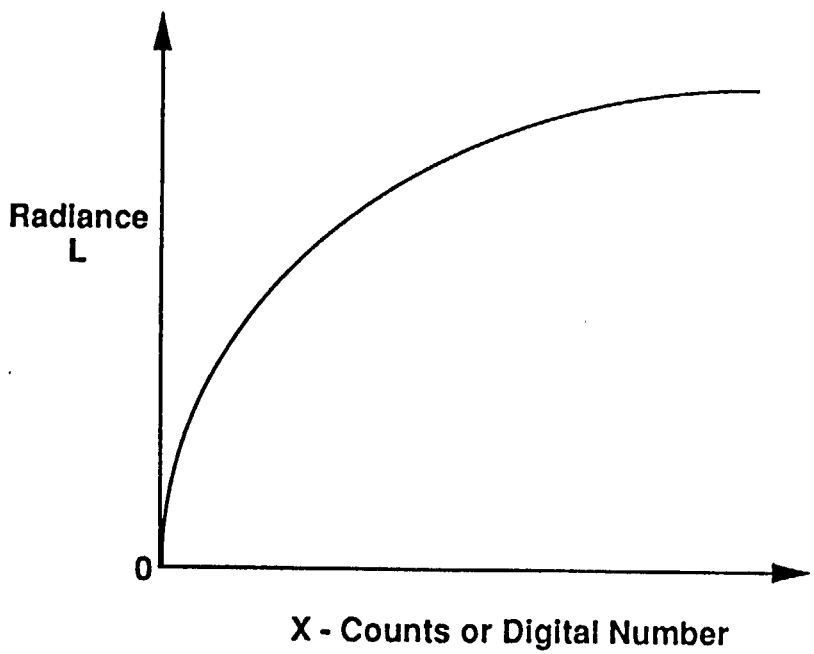


$$L = q\,f(x) + m\,x + b$$

where
$f(x)$ is a non-linear term, commonly $x^2$.
$q$ is the non-linear coefficient.
$m$ is the gain.
$b$ is the offset.
$x$ is the number of counts.

# PREFLIGHT CALIBRATION IN THE LABORATORY

## PREFLIGHT CALIBRATION REQUIRES THE CONSTRUCTION AND VERIFICATION OF PERFORMANCE MODELS

PURPOSES:

- Define and iterate with Systems Engineering requirements and error flowdowns.
- Define critical functions for test hardware and establish tolerances.
- Predict results prior to testing based on as-measured parameters.
- Analyze laboratory measurements.
- Predict sensor performance based on these measurements.
- Define calibration coefficients for MODIS database.
- Act as a resource to monitor, simulate, and troubleshoot changes in calibration once in orbit.

CURRENT MODELS:

MODIS Systems Analysis Program (MSAP or RMM)
MODIS Simulator
Structural, Thermal, Optical Performance (STOP)
Various subsystem models

# ERROR BUDGET

Current accuracy estimates are:

| Accuracy Budget | Preflight 1-19,26 Radiance (%) | Preflight 1-19,26 Reflectance (%) |
|---|---|---|
| Irrad / Rad Standard | 0.50 | |
| Working Standard | 1.00 | |
| Standard Lamp Usage | | |
| Total | 1.69 | |
| Orientation | 0.30 | |
| Diffuser to Lamp | 0.50 | |
| Current | 0.50 | |
| Linearity | 1.50 | |
| Diffuser | 0.50 | 1.00 |
| Monochromator (tot) | 1.76 | 0.00 |
| Scattered Light | 1.00 | 0.00 |
| Wavelength Calibration | 0.30 | 0.00 |
| Non-uniformity | 1.00 | 0.00 |
| Geometric Error | 1.00 | 0.00 |
| SIS (total) | 0.71 | 0.00 |
| Current Control | 0.50 | 0.00 |
| Non-uniformity | 0.50 | 0.00 |
| MODIS (total) | 2.28 | 1.62 |
| SNR | 0.50 | 0.50 |
| Linearity | 0.50 | 0.50 |
| Cross-talk | 0.50 | 0.50 |
| Wavelength Shift | 1.00 | 0.00 |
| Out-of-Band | 1.24 | 0.00 |
| Polarization | 1.00 | 1.00 |
| Scan Mirror Scatter | 0.80 | 0.80 |
| Stray Light | 0.50 | 0.50 |
| RSS Total | 3.62 | 1.90 |
| Requirement | 5.00 | 2.00 |
| Margin | 1.38 | 0.10 |

| Accuracy Budget | Preflight Infrared Radiance (%) | Preflight Band 20 Radiance (%) | Preflight Bands 31,32 Radiance (%) |
|---|---|---|---|
| Source (total) | 0.52 | 0.52 | 0.22 |
| BB Temp | 0.17 | 0.17 | 0.06 |
| BB Emiss | 0.10 | 0.10 | 0.10 |
| Nonuniformity | 0.34 | 0.34 | 0.12 |
| Scattering | 0.05 | 0.05 | 0.05 |
| Stray Light | 0.05 | 0.05 | 0.05 |
| Stability | 0.34 | 0.34 | 0.12 |
| MODIS (total) | 0.55 | 0.27 | 0.18 |
| SNR | 0.25 | 0.05 | 0.02 |
| Linearity | 0.10 | 0.10 | 0.10 |
| Cross-talk | 0.10 | 0.10 | 0.10 |
| Wavelength Shift | 0.40 | 0.08 | 0.02 |
| Out-of-Band | 0.15 | 0.05 | 0.01 |
| Polarization | 0.00 | 0.00 | 0.00 |
| Scan Mirror Scatter | 0.01 | 0.01 | 0.02 |
| Stray Light | 0.20 | 0.20 | 0.10 |
| RSS Total | 0.76 | 0.58 | 0.28 |
| Requirement | 1.00 | 0.75 | 0.50 |
| Margin | 0.24 | 0.17 | 0.22 |

# BASIS FOR PREDICTIONS

- SBRC predictions based on budgets, experience, and available measurements
- NIST traceability maintained through multiple transfer standards
- MCST is reviewing these predictions
- PREDICTED UNCERTAINTIES STILL EVOLVING

# VERIFICATION

Tests will be conducted at all phases:

Subsystem checkout
subsystem integration
optical alignment and performance
ambient performance
thermal vacuum tests
instrument/spacecraft integration
in-flight performance

- Results from each level will be compared for consistency.
- Test results will verify/update performance models.
- System level results will also be verified with preflight cross calibration and solar radiation based calibrations.

references: SBRC Calibration Management Plan, CDRL 018, March 1994.
SBRC Performance Verification Plan, CDRL 022, January 1994 (under revision).

# PERSONNEL

- SBRC will conduct all preflight calibration.
- MCST will review all aspects of preflight calibration and assist where appropriate.
- The Universities of Arizona and Wisconsin and others to be named will also assist.

# SCHEDULE

| EVENT | DATE |
|---|---|
| SBRC conducts EM ambient tests | 94DEC to 95FEB |
| SBRC conducts EM T/V tests | 95FEB |
| SBRC delivers final in-flight procedures | 95JUNE |
| SBRC conducts Protoflight ambient tests | 96APR - 96MAY |
| Protoflight Model Delivery | 96JUN |

***These dates have been updated on 4/1/94. They are subject to further change.**

# CALIBRATION SITES

- All preflight laboratory calibrations shall be conducted at SBRC

- Some characterization measurements will be conducted during spacecraft integration at Martin Marietta

# RISK ASSESSMENT

Preflight calibration error budgets are challenging.

SBRC's original preflight calibration plan is being redone and descoped for cost considerations. Analysis of the final risk increase has not yet been completed.

# RISKS FROM SBRC REPLAN

The Engineering Model system level tests will be extremely limited, increasing the risk of having problems go undetected until the protoflight model construction when they will be more difficult to correct.

The Engineering Model will not include the SRCA and SD/SDSM. Their performance is at a higher risk.

The use of the MODIS Ground Based Calibrator (MGBC) is being delayed. The impact on the science data products is not yet evaluated.

ALL TESTS WILL STILL BE PERFORMED ON THE PROTOFLIGHT MODEL

**Future descopes will increase risks to calibration, particularly the MGBC and SRCA.**

# CHAPTER 2 SUPPLEMENTAL VIEWGRAPHS

# FULL COMPLEMENT OF OPTICAL STIMULI AVAILABLE (1 OF 2)

HUGHES
SANTA BARBARA RESEARCH CENTER
a subsidiary

THE MODIS OPTICAL STIMULI PROVIDE DYNAMIC TEST CAPABILITY THAT EXERCISE, CHARACTERIZE, AND CALIBRATE MODIS INSTRUMENT

MODIS GROUND-BASED CALIBRATOR (MGBC)

- PROVIDE A MODERATE ACUITY (40 μr IMAGE BLUR) OVERFILLS THE ENTRANCE APERTURE ACROSS THE FULL FIELD (1° x 3°)
- SPATIAL PHASED RETICLE PATTERNS USED FOR CHARACTERIZATION OF MTF, SBR, TRANSIENT RESPONSE, GHOSTING, AND CROSSTALK
- PROVIDES OPTICAL ALIGNMENT OF THE MODIS INSTRUMENT TO THE OPTICAL STIMULI AND MEASURE THE MODIS OPTICAL AXIS TO EXTERNAL ALIGNMENT REFERENCE
- DOUBLE MONOCHROMATOR USED TO CHARACTERIZE MODIS SPECTRAL PERFORMANCE

FULL APERTURE SPACE VIEW SOURCE (SVS) THAT CAN BE USED IN/OUT OF A VACUUM CHAMBER

# FULL COMPLEMENT OF OPTICAL STIMULI AVAILABLE (2 OF 2)

HUGHES
SANTA BARBARA RESEARCH CENTER
a subsidiary

- BLACKBODY CALIBRATION SOURCE (BCS)
  - USED IN/OUT OF A VACUUM CHAMBER
  - TEMPERATURE RANGE: 170K TO 380K
  - EMISSIVITY > 0.999
- SPHERICAL INTEGRATOR SOURCE, SIS(100)
  - RADIOMETRIC CALIBRATION THROUGHOUT THE 0.4 TO 2.2 μm REGION
  - LOCATED IN AMBIENT LABORATORY CONDITIONS
  - CALIBRATE MODIS UNDER AMBIENT OR VACUUM CONDITIONS
  - CALIBRATION IS TRACEABLE TO NIST STANDARDS
- POLARIZATION CHARACTERIZATION SOURCE
- INTEGRATION AND ALIGNMENT COLLIMATOR
  - CENTRALLY OBSCURED PARABOLA WITH SOURCES AND RETICLES
  - TWO POINTABLE MIRRORS COVER 1° × 3° FIELD

# MGBC SYSTEM DESIGN CONFIGURATION

HUGHES
SANTA BARBARA RESEARCH CENTER
a subsidiary

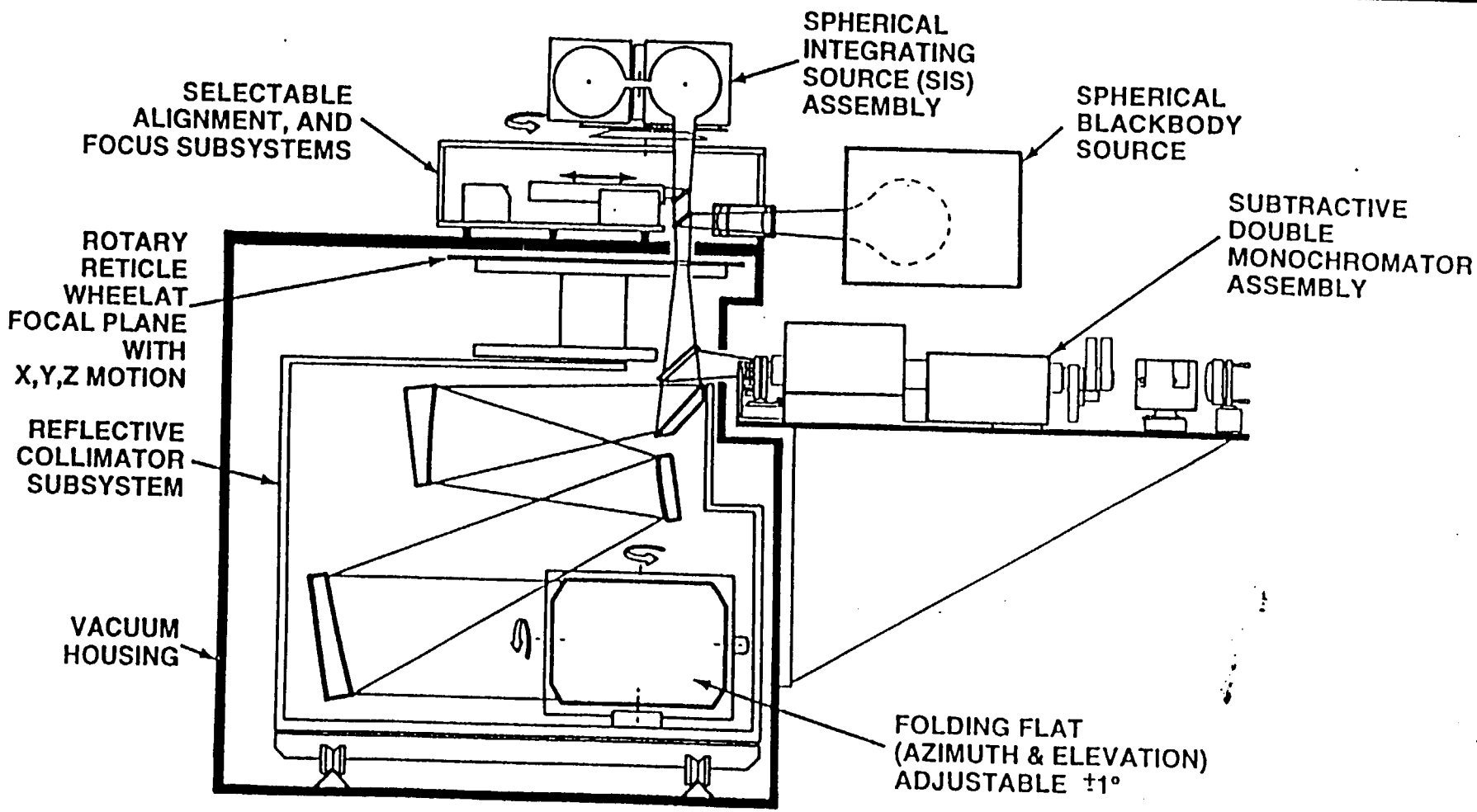

# SPECTRAL MEASUREMENTS ASSEMBLY

HUGHES
SANTA BARBARA RESEARCH CENTER
a subsidiary

## DOUBLE GRATING SUBTRACTIVE MONOCHROMATOR SUBSYSTEM

### EXIT SLIT MICROPOSITIONING AND REFERENCE DETECTOR ASSEMBLY

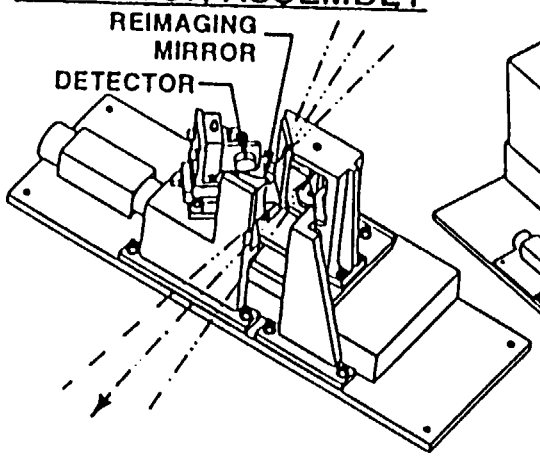


- PYROELECTRIC DETECTOR FOR RELATIVE SPECTRAL RESPONSE MEASUREMENTS
- EXIT SLIT CAN BE POSITIONED ON MODIS FOCAL PLANE WITH VERNIER POSITIONING

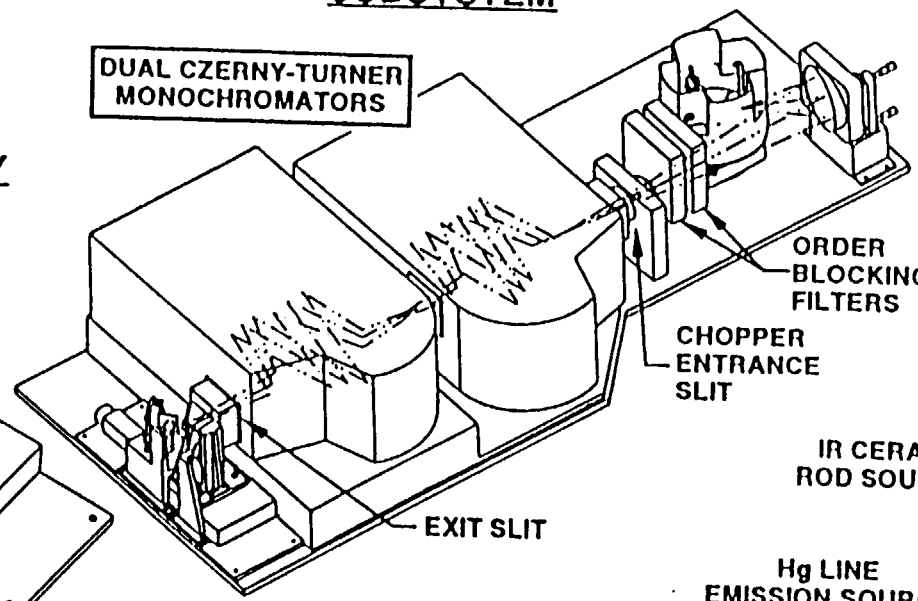


- WAVELENGTH RANGE COVERED IS 0.4UM TO 14.3UM
- SPECTRAL BANDWIDTHS FROM 2NM TO 300NM
- AUTOMATIC SLIT WIDTH CONTROL (3 SLIT MECHANISMS) FOR MAXIMIZING THROUGHPUT

### SOURCE ASSEMBLY

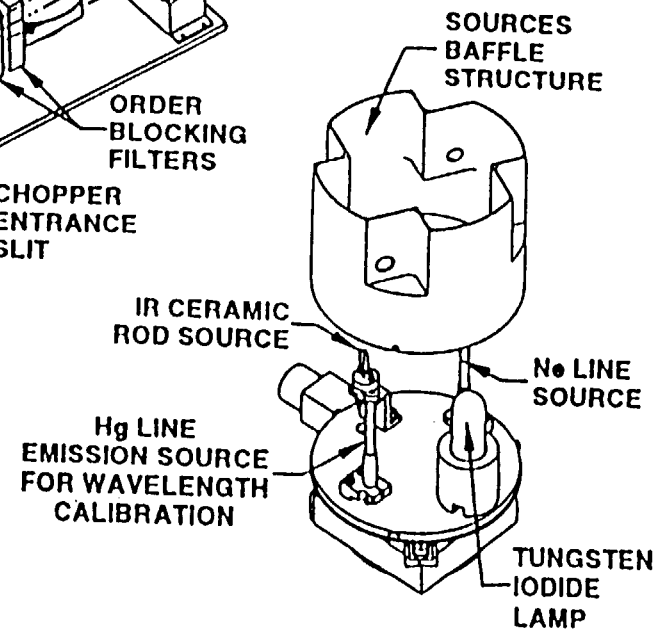


- LINE SOURCES PROVIDE WAVELENGTH CALIBRATION OVER ENTIRE RANGE
- TUNGSTEN SOURCE COVERS VIS/NIR/SWIR
- CERAMIC ROD SOURCE COVERS MWIR/LWIR

PREFLIGHT CALIBRATION IN THE LABORATORY

# MGBC RETICLE DESIGNS

HUGHES

SANTA BARBARA REBEARCH CENTER
a subsidiary

RRC 11/9/93

| RETICLE WHEEL POSN | RETICLE MATERIAL | FUNCTION |
|---|---|---|
| 1 | GLASS | ALIGNMENT OF MODIS/ MGBC |
| 2 | NONE | OPEN SPACE |
| 3 | METAL | MTF ALL BANDS, SCAN AXIS |
| 4 | METAL | SBR ALL BANDS, SCAN AXIS |
| 5 | FUSED SI | SBR VNS*, 1KM, TRACK AXIS |
| 6 | FUSED SI | SBR VNS, 0.5 &0.25KM, TRACK |
| 7 | ZnSe | SBR MW/LWIR, 1KM, TRACK AXIS |
| 8 | ZnSe | STRAY LIGHT MW/LWIR, 5X5 PIX |
| 9 | METAL | CROSSTALK VNS, SLITS USED FOR BOTH TRACK& SCAN AXES |
| 10 | METAL | CROSSTALK MW/LWIR, SLITS USED FOR TRACK&SCAN AXES |
| 11 | FUSED SI | TRANSIENT RESPONSE, VIS ONLY |
| 12 | FUSED SI | TRANSIENT RESPONSE, NIR ONLY |
| 13 | FUSED SI | TRANSIENT RESPONSE, SWIR ONLY |
| 14 | ZnSe | TRANSIENT RESPONSE, MWIR ONLY |
| 15 | ZnSe | TRANSIENT RESPONSE, LWIR ONLY |

* VNS - VISIBLE, NIR AND SHORTWAVE IR

SBR(ALONG SCAN)

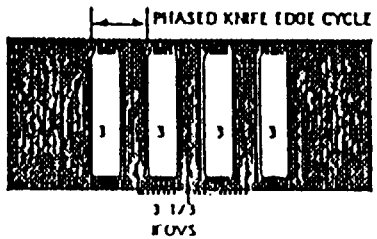


SBR(ALONG TRACK) 1KM

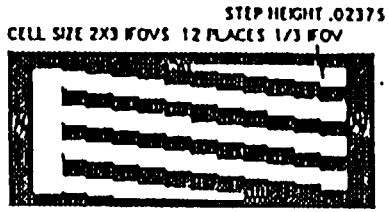


SBR(ALONG TRACK)0.5&0.25KM

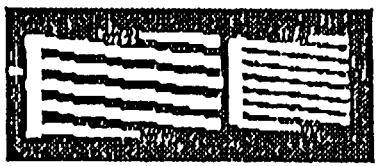

MTF(ALONG SCAN)

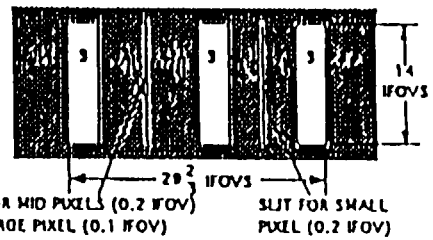


STRAY LIGHT

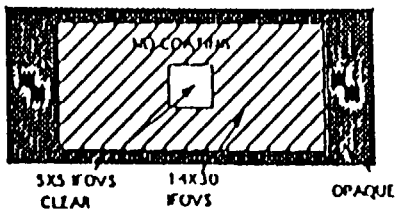


CROSS TALK

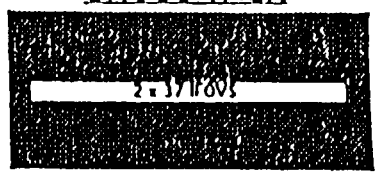


TRANSIENT RESPONSE

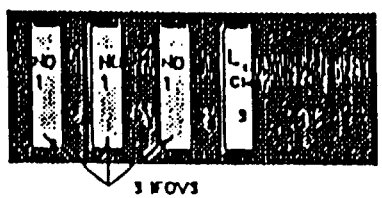


ALIGNMENT

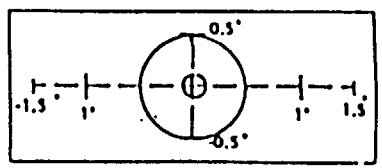

# SIS (100) SYSTEM DESIGN

HUGHES
SANTA BARBARA RESEARCH CENTER
a subsidiary

93-12-184

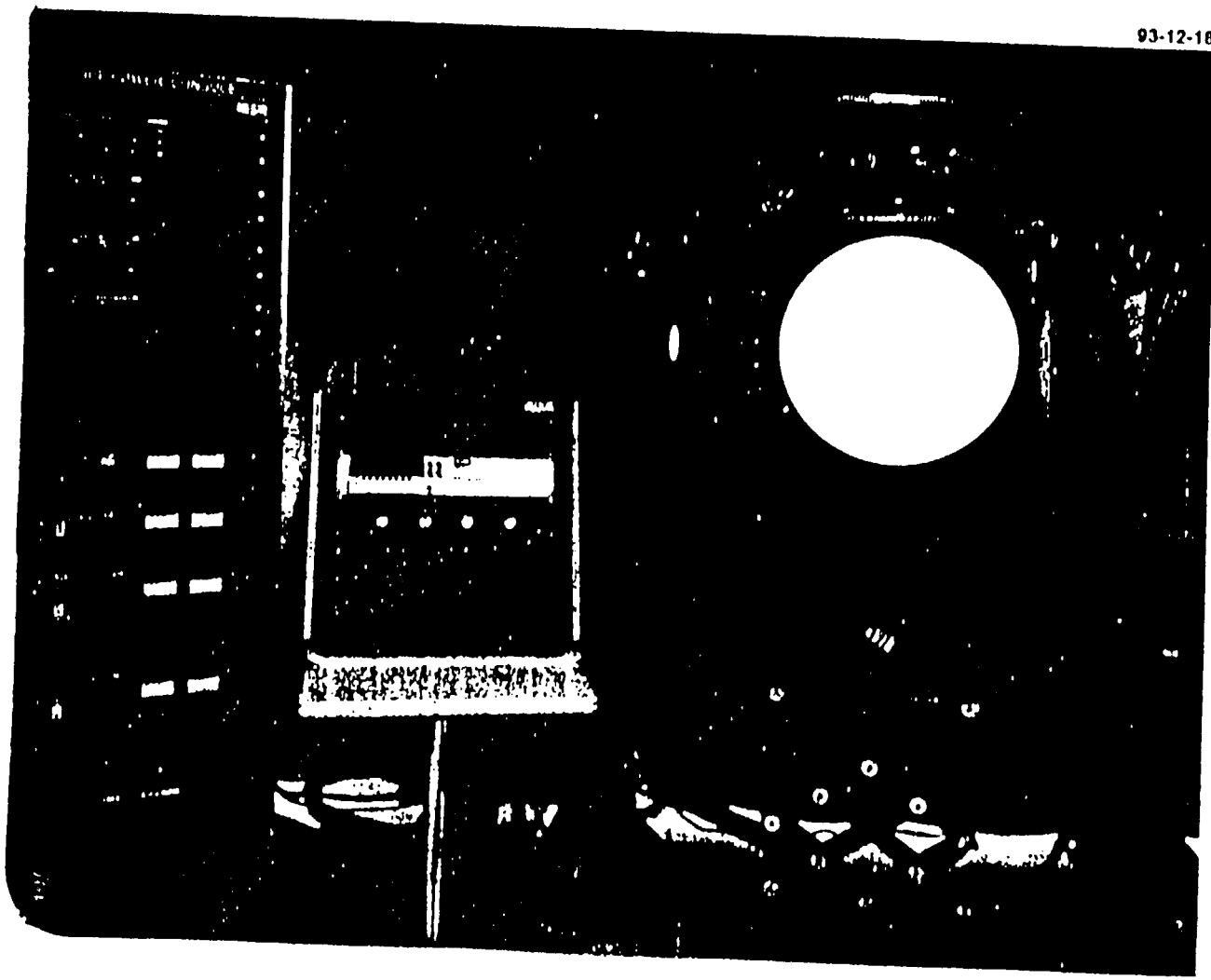

- SPHERE DIA.
  100 cm (40 inch)
- APERTURE DIA.
  45.7 cm (18 inch)
- 37 INDIVIDUALLY SWITCHED QUARTZ HALOGEN LAMPS
- 4050 TOTAL WATTS
- SPECTRAFLECT INTERIOR COATING
- EXTRA BACK HEMISPHERE WITH PORTHOLE FOR MODIS STRAY LIGHT TESTING

# BLACKBODY CALIBRATION SOURCE ASSEMBLY IS IN PROCESS

HUGHES
SANTA BARBARA RESEARCH CENTER
a subsidiary

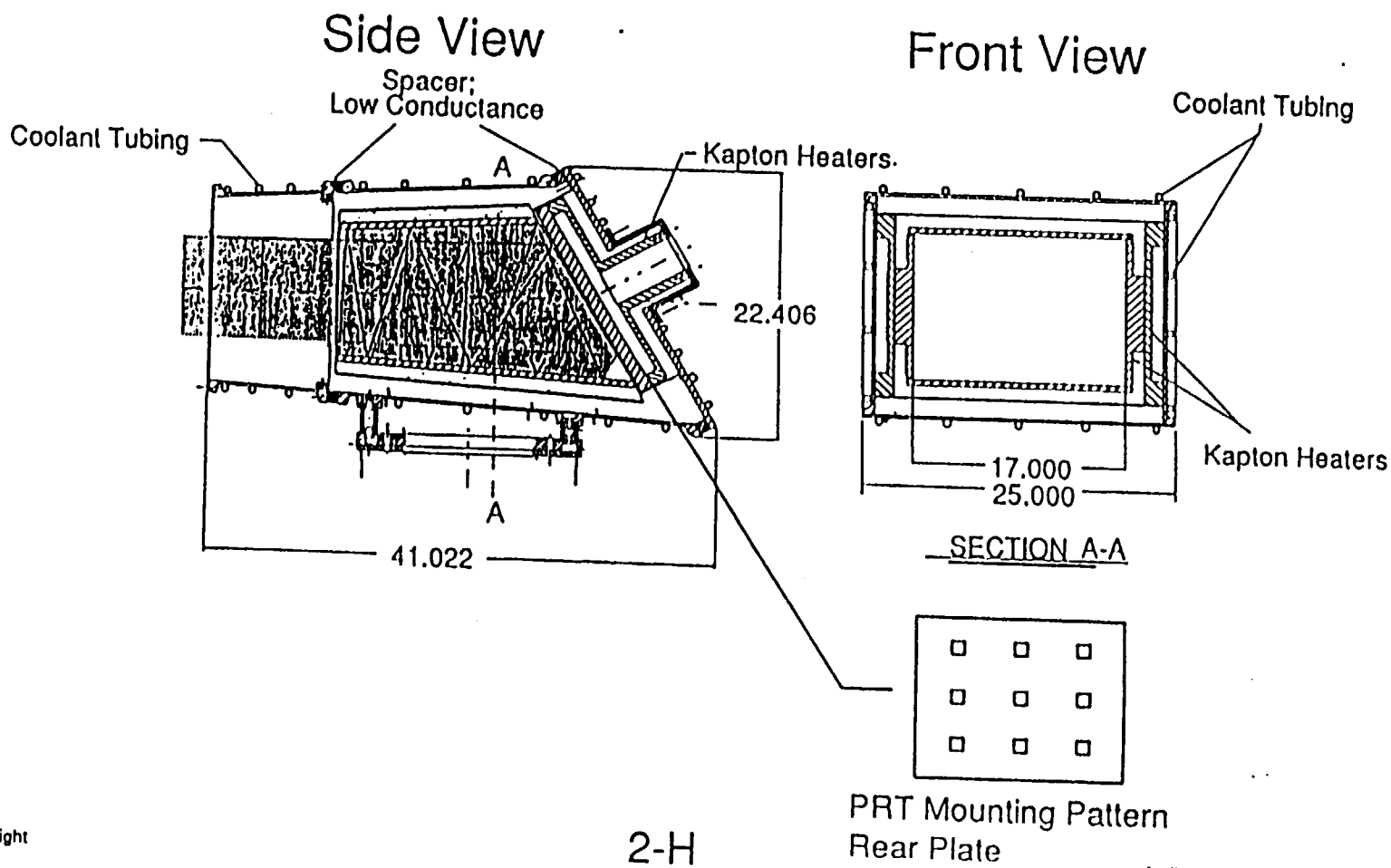

# INTEGRATION AND ALIGNMENT COLLIMATOR DESIGN

HUGHES
SANTA BARBARA RESEARCH CENTER
a subsidiary

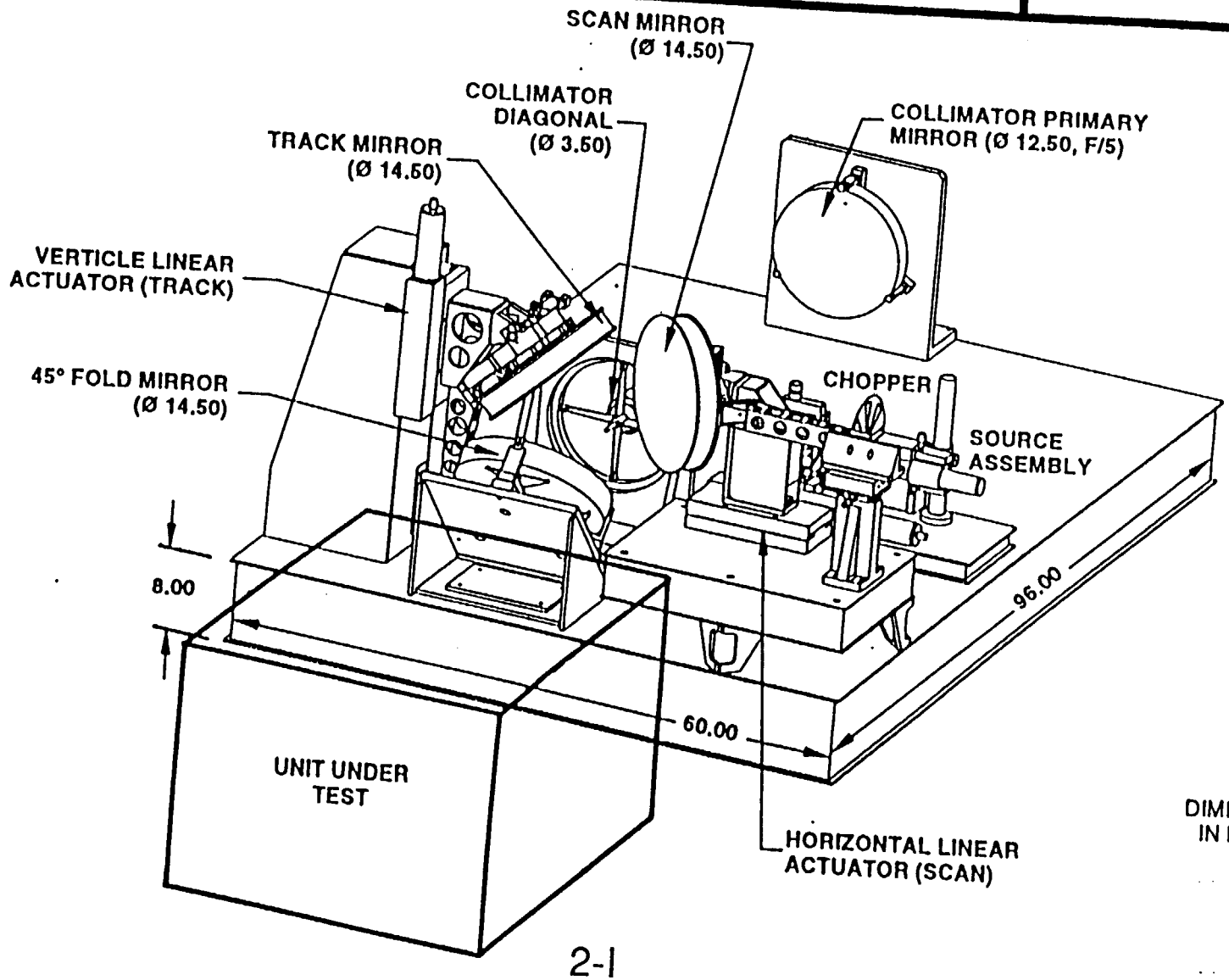


DIMENSIONS
IN INCHES

Table 1-2. Performance Characterization and Calibration Math Model

| Model | Purpose |
|---|---|
| Transfer spectral radiance/irradiance to spherical integrator source (SIS) via monochromator comparator – multiple methodologies | Source calibration, VIS/NIR/SWIR |
| SIS – MODIS | Instrument calibration, VIS/NIR/SWIR |
| Full aperture blackbody – MODIS | Instrument calibration, MWIR/LWIR |
| MTF/IFOV – calibrator (phased reticles) – MODIS | Instrument characterization, all bands |
| Band-to-band registration – calibrator and phased reticle – MODIS | Instrument characterization, all bands |
| Transient response – calibrator – MODIS | Instrument characterization, all bands |
| Spectral response – monochromator – MODIS | Instrument characterization, all bands |
| Polarization – calibrator – MODIS | Instrument characterization, all bands |
| Stray light response/calibrator/SIS – MODIS | Instrument characterization, all bands |
| OBC blackbody – MODIS | Instrument calibration, MWIR/LWIR |
| OBC diffuser calibration | BRDF 0.4-2.40 μm, angle |
| OBC solar-illuminated diffuser – MODIS | Instrument calibration, VIS/NIR/SWIR |
| SRCA – filtered incandescent source – MODIS | Calibration transfer, VIS/NIR/SWIR |
| SRCA – filtered incandescent source – MODIS | Instrument calibration check, VIS/NIR/SWIR |
| Wavelength calibration – SRCA monochromator | λ calibration, VIS/NIR |
| Spectral response – SRCA – MODIS | Instrument characterization, VIS/NIR |
| Band-to-band spatial registration – OBC SRCA – MODIS | Instrument characterization, all bands |
| Diffuser – sun – solar illuminated diffuser stability monitor | Diffuser stability check, 0.4-2.3 μm |
| Ground truth – Earth/lunar/atmosphere – MODIS - several major models | Instrument calibration |