MODIS DATA PRODUCTS
- LAND -

Discipline Group	Priority Rank	MODIS OUTPUT DATA PRODUCT INFORMATION				
		Prod #	Parameter :: Qualifier	Investigator	Time	Original Product Name (from Investigator)
LND	i	1556	Roughness ::	Tanre, Muller	PL	Bidirec.Reflect/Albedo/Surf.Rough.
LND	i	1557	Roughness ::	Tanre, Muller	PL	Bidirec.Reflect/Albedo/Surf.Rough.
LND	i	2001	Albedo :: Sectral	Muller, Strahler	AL	Spectral Hemispherical Albedo
LND	i	2015	Albedo ::	Tanre, Muller	PL	Bidirec.Reflect/Albedo/Surf.Rough.
LND	i	2016	Albedo ::	Tanre, Muller	AL	Bidirec.Reflect/Albedo/Surf.Rough.
LND	i	2040	Reflectance :: BRDF Land	Muller, Strahler	AL	BRDF
LND	i	2404	Radiance :: Topographic Correction	Muller	AL	Topographic Correction
LND	i	2405	Radiance :: Topographic Correction	Muller	AL	Topographic Correction
LND	i	2484	Temperature :: Land SFC	Wan	AL	Surface Temperature
LND	i	2485	Temperature :: Land SFC	Wan	AL	Surface Temperature
LND	i	2669	Land Cover :: Type	Strahler, Huete et al	AL	Land Cover
LND	i	2670	Land Cover :: Type	Strahler, Huete et al	AL	Land Cover

MODIS DATA PRODUCTS
- LAND -

Discipline Group	Priority Rank	MODIS OUTPUT DATA PRODUCT INFORMATION				
		Prod #	Parameter :: Qualifier	Investigator	Time	Original Product Name (from Investigator)
LND	i	2703	Production :: Primary	Running	PL	Primary Production
LND	i	2749	Vegetation Index ::	Justice, Huete, et al	AL	Vegetation Indices
LND	i	2750	Vegetation Index ::	Justice, Huete, et al	AL	Vegetation Indices
LND	i	2751	Vegetation Index ::	Justice, Huete, et al	AL	Vegetation Indices
LND	i	3020	Snow Cover ::	Salomonson	AL	Snow Cover
LND	i	3021	Snow Cover ::	Salomonson	AL	Snow Cover
LND	ii	2047	Brightness Index :: Soil	Huete	AL	Soil Brightness Index
LND	ii	2095	Color Index :: Soil	Huete	AL	Soil Color Index
LND	ii	2259	Heterogeneity :: Spatial	Justice, Strahler	AL	Radiomet.Spat.Heterog.(MODIS-N 428m)
LND	ii	2260	Heterogeneity :: Spatial	Justice, Strahler	AL	Radiomet.Spat.Heterog.(MODIS-N 856m)
LND	ii	2261	Heterogeneity :: Spatial	Strahler, Justice	AL	Spatial Structure
LND	ii	2262	Heterogeneity :: Spatial	Justice, Strahler	AL	Radiomet.Spatial Heterogeneity

MODIS DATA PRODUCTS
- LAND -

Discipline Group	Priority Rank	MODIS OUTPUT DATA PRODUCT INFORMATION				
		Prod #	Parameter :: Qualifier	Investigator	Time	Original Product Name (from Investigator)
LND	ii	2286	Mixture Model :: Spectral-Spatial	Huete	PL	Spectral/Spatial Mixture Modeling
LND	ii	2337	Vegetation Index :: Polarization	Vanderbilt	PL	Polarization Vegetation Index
LND	ii	2424	Reflectance :: Directional	Tanre, Muller	PL	Bidirec.Reflect/Albedo/Surf.Rough.
LND	ii	2425	Reflectance :: Directional	Tanre, Muller	PL	Bidirec.Reflect/Albedo/Surf.Rough.
LND	ii	2434	Reflectance :: Directional	Muller, Strahler	AL	Directional Reflectance
LND	ii	2537	Temperature Diff :: Day-Night	Huete	PL	Day/Night Temperature Difference
LND	ii	2659	Duration :: Growing Season	Justice	PL	Length of Growing Season
LND	ii	2660	Duration :: Growing Season	Justice	PL	Length of Growing Season
LND	ii	2671	Land Cover :: Type Change	Strahler, Huete, et al	AL	Land Cover Change
LND	ii	2672	Land Cover :: Type Change	Strahler, Huete, et al	AL	Land Cover Change
LND	ii	2680	Vegetation Index :: LAI	Running	PL	Leaf Area Index
LND	ii	2723	Vegetation :: Stress	Running, Huete	PL	Vegetation Stress
LND	ii	2724	Veg. Index :: Soil&BRDF Adjusted	Huete	PL	Improved Vegetation Index
LND	ii	2748	Vegetation Index :: Soil Adjusted	Huete	AL	Improved Soil-Adjusted Veg. Index

MODIS DATA PRODUCTS
- ATMOSPHERE -

Discipline Group	Priority Rank	MODIS OUTPUT DATA PRODUCT INFORMATION				
		Prod #	Parameter :: Qualifier	Investigator	Time	Original Product Name (from Investigator)
ATM	A	2294	Optical Depth :: Aerosol	Tanre, Kaufman	AL	Spectral Aero. Opt. Thickness (Ocean)
ATM	A	2311	Optical Depth :: Cloud	King	AL	Cloud Optical Thickness
ATM	A	2312	Optical Depth :: Cloud	King	AL	Cloud Optical Thickness
ATM	A	2429	Reflectance :: Directional	Kaufman, et al	AL	Surface Directional Reflectance
ATM	A	2430	Reflectance :: Directional	Kaufman, et al	AL	Surface Directional Reflectance
ATM	A	2431	Reflectance :: Directional	Kaufman, et al	AL	Surface Directional Reflectance
ATM	A	2663	Fires :: Count	Kaufman, Justice	AL	Fire Count Size & Temperature
ATM	A	2664	Fires :: Count	Kaufman, Justice	AL	Fire Count Size & Temperature
ATM	A	2711	Fires :: Classification	Kaufman, Justice	AL	Fire Count Size & Temperature
ATM	A	3321	H20 :: Integrated	Kaufman, Tanre	AL	Total Precip. Water(Water Vapor Prof.)
ATM	B	1022	Aerosol Size-Distribution ::	Tanre, Kaufman	AL	Mean Radius & Dispersion of Aerosol
ATM	B	1560	Stability-Lifted Index ::	Menzel	AL	Atmospheric Stability (Lifted Index)
ATM	B	1765	Cloud Drop Phase ::	King, Menzel	AL	Cloud Water Thermodynamic Phase
ATM	B	1874	H20 :: Integrated	Kaufman, Tanre	AL	Total Precip. Water(Water Vapor Prof.)

MODIS DATA PRODUCTS
- ATMOSPHERE -

Discipline Group	Priority Rank	MODIS OUTPUT DATA PRODUCT INFORMATION				
		Prod #	Parameter :: Qualifier	Investigator	Time	Original Product Name (from Investigator)
ATM	B	2003	Single Scattering Albedo :: Aerosol	Tanre, Kaufman	PL	Aerosol Single Scattering Albedo
ATM	B	2068	Cloud-Field Area ::	Kaufman	PL	Cloud Area & Perimeter - Geometry
ATM	B	2081	Cloud Cover ::	King	AL	Cloud Fractional Area
ATM	B	2082	Cloud Cover ::	King	AL	Cloud Fractional Area
ATM	B	2092	Could-Field Perimeter ::	Kaufman	PL	Cloud Area & Perimeter - Geometry
ATM	B	2466	Temperature :: Cloud Top	Menzel	AL	Cloud Top Temperature
ATM	B	2467	Temperature :: Cloud Top	Menzel	AL	Cloud Top Temperature
ATM	B	2471	Temperature :: Fires	Kaufman, Justice	AL	Fire Count Size & Temperature
ATM	B	2665	Fires :: Extent	Kaufman, Justice	AL	Fire Count Size & Temperature
ATM	B	2666	Fires :: Extent	Kaufman, Justice	AL	Fire Count Size & Temperature
ATM	C	1333	03 :: Integrated	Menzel	AL	Total Ozone Content
ATM	C	1334	03 :: Integrated	Menzel	AL	Total Ozone Content
ATM	C	2268	IPAR ::	Tanre	PL	Incident PAR
ATM	C	3322	H2O :: Integrated	Kaufman	AL	Total Precip. Water(Water Vapor Prof.)

MODIS DATA PRODUCTS
- OCEAN -

Discipline Group	Priority Rank	MODIS OUTPUT DATA PRODUCT INFORMATION				
		Prod #	Parameter :: Qualifier	Investigator	Time	Original Product Name (from Investigator)
OCN	1	2416	Radiance :: Water Leaving	Gordon, et al	AL	Water Leaving Radiances (Visible)
OCN	1	2417	Radiance :: Water Leaving	Gordon, et al	AL	Water Leaving Radiances (Visible)
OCN	1	2527	Temperature :: SST	Brown	AL	Region. Sea Surf. Temp.(AVHRR Algorithm)
OCN	1	2528	Temperature :: SST	Brown	AL	Region. Sea Surf. Temp.(AVHRR Algorithm)
OCN	1	2529	Temperature :: SST	Brown	AL	Region. Sea Surf. Temp.(AVHRR Algorithm)
OCN	1	2530	Temperature :: SST	Brown, Barton	AL	Global Sea Surf. Temp.(ATSR Algorithm)
OCN	1	2531	Temperature :: SST	Brown, Barton	AL	Global Sea Surf. Temp.(ATSR Algorithm)
OCN	1	2532	Temperature :: SST	Brown, Barton	AL	Global Sea Surf. Temp.(ATSR Algorithm)
OCN	1	2569	Chlorophyll a ::	Carder	AL	Chlorophyll-A Concentration (Case II)
OCN	1	2570	Chlorophyll a ::	Carder	AL	Chlorophyll-A Concentration (Case II)
OCN	1	2571	Chlorophyll a ::	Clark	AL	Chlorophyll-a Concentration (Case I)
OCN	1	2572	Chlorophyll a ::	Clark	AL	Chlorophyll-a Concentration (Case I)

MODIS DATA PRODUCTS
- OCEAN -

Discipline Group	Priority Rank	MODIS OUTPUT DATA PRODUCT INFORMATION				
		Prod #	Parameter :: Qualifier	Investigator	Time	Original Product Name (from Investigator)
OCN	1	2575	Chlorophyll :: Fluor Line Height	Abbott	AL	Chorophyll Fluorescence Line Height
OCN	1	2576	Chlorophyll :: Fluor Line Height	Abbott	AL	Chorophyll Fluorescence Line Height
OCN	1	2577	Coccolith :: Detached	Gordon, Clark	AL	Detached Coccolith Conc. (E. Huxleyi)
OCN	1	2578	Coccolith :: Detached	Gordon, Clark	AL	Detached Coccolith Conc. (E. Huxleyi)
OCN	1	2580	Organic Matter :: Dissolved Colored	Carder	AL	Dissolved Organic Matter-Case I Global
OCN	1	2581	Organic Matter :: Dissolved Colored	Carder	AL	Dissolved Organic Matter-Case I Global
OCN	1	2582	Organic Matter :: Dissolved Colored	Parslow, et al	AL	Dissolved Organic Matter-Southern
OCN	1	2583	Organic Matter :: Dissolved Colored	Parslow, et al	AL	Dissolved Organic Matter-Southern
OCN	1	2585	Pigment Conc :: Phycoerythrin	Hoge	AL	Phycoerytherin Pigment Concentration
OCN	1	2586	Pigment Conc :: Phycoerythrin	Hoge	AL	Phycoerytherin Pigment Concentration
OCN	1	2591	Pigment Conc ::	Gordon, Clark	AL	Pigment Concentration (CZCS)
OCN	1	2592	Pigment Conc ::	Gordon, Clark	AL	Pigment Concentration (CZCS)

MODIS DATA PRODUCTS
- OCEAN -

Discipline Group	Priority Rank	MODIS OUTPUT DATA PRODUCT INFORMATION				
		Prod #	Parameter :: Qualifier	Investigator	Time	Original Product Name (from Investigator)
OCN	1	2606	Productivity :: Primary	Esias, Abbott	AL	Ocean Primary Productivity (Empirically)
OCN	1	3199	Attenuation coef@ 490nm ::	Gordon, Clark	AL	Attenuation K at 490nm (Case I)
OCN	1	3200	Attenuation coef@ 490nm ::	Gordon, Clark	AL	Attenuation K at 490nm (Case I)
OCN	2	2330	PAR ::	Esias	PL	Daily PAR
OCN	2	2566	Chlorophyll a ::	Abbott	PL	Chlorophyll-A Conc. from Flouresc.
OCN	2	2567	Chlorophyll a ::	Abbott	PL	Chlorophyll-A Conc. from Flouresc.
OCN	2	2568	Chlorophyll a ::	Abbott	PL	Chlorophyll-A Conc. from Flouresc.
OCN	2	2602	Productivity :: Primary	Abbott	PL	Primary Productivity, Case I waters
OCN	2	2603	Productivity :: Primary	Abbott	PL	Primary Productivity, Case I waters
OCN	2	2604	Productivity :: Primary	Abbott	PL	Instant. Surf. Prim. from F.L.H.
OCN	2	2605	Productivity :: Primary	Abbott	PL	Instant. Surf. Prim. from F.L.H.
OCN	2	3211	Flourescence efficiency ::	Abbott	PL	Flourescence Efficiency
OCN	2	3212	Flourescence efficiency ::	Abbott	PL	Flourescence Efficiency

MODIS DATA PRODUCTS
- OCEAN -

Discipline Group	Priority Rank	MODIS OUTPUT DATA PRODUCT INFORMATION				
		Prod #	Parameter :: Qualifier	Investigator	Time	Original Product Name (from Investigator)
OCN	3	1688	Wind :: Glint pattern	Gordon	PL	Sfc Winds in Glint Pattern
OCN	3	2031	Attenuation ceof :: PAR	Clark	PL	Attenuation of PAR (K)
OCN	3	2032	Attenuation ceof :: PAR	Clark	PL	Attenuation of PAR (K)
OCN	3	2110	Emissivity ::	Barton	PL	Surface Emissivity
OCN	3	2111	Emissivity ::	Barton	PL	Surface Emissivity
OCN	3	2254	Glint field ::	Gordon	PL	Glint Field
OCN	3	2266	IPAR ::	Gordon	AL	Surface Incident PAR (h nu), Keb
OCN	3	2267	IPAR ::	Gordon	AL	Surface Incident PAR (hau) Keb
OCN	3	2295	Angstrom exponent :: Aerosol	Gordon	AL	Aerosol Angstrom Exp. Optical Depth
OCN	3	2296	Angstrom exponent :: Aerosol	Gordon	AL	Aerosol Angstrom Exp. Optical Depth
OCN	3	2344	Radiance :: Aerosol	Gordon	AL	Single Scatt. Aerosol Radiation; ta<0.6
OCN	3	2345	Radiance :: Aerosol	Gordon	AL	Single Scatt. Aerosol Radiance; Ta<0.6

MODIS DATA PRODUCTS
- OCEAN -

Discipline Group	Priority Rank	MODIS OUTPUT DATA PRODUCT INFORMATION				
		Prod #	Parameter :: Qualifier	Investigator	Time	Original Product Name (from Investigator)
OCN	3	2555	Backscatter ceof :: Phytoplankton	Gordon	PL	Phytoplankton Backscattering Coef
OCN	3	2556	Backscatter ceof :: Coccolith	Gordon	PL	Coccolith Backscattering Coef
OCN	3	2557	Backscatter ceof :: Coccolith	Gordon	PL	Coccolith Backscattering Coef
OCN	3	2558	Backscatter ceof :: Phytoplankton	Gordon	PL	Phytoplankton Backscattering Coef
OCN	3	2559	Backscatter ceof :: Total	Gordon	PL	Total Backcsattering Coef
OCN	3	2560	Backscatter ceof :: Total	Gordon	PL	Total Backcsattering Coef
OCN	3	2573	Chlorophyll :: Flour line curv	Hoge	AL	Chlorophyll Flourescence Curvature
OCN	3	2574	Chlorophyll :: Flour line curv	Hoge	AL	Chlorophyll Flourescence Curvature
OCN	3	2593	Pigment conc :: Curv	Hoge	PL	Pigment Concentration (Curvature)
OCN	3	2594	Pigment conc :: Curv	Hoge	PL	Pigment Concentration (Curvature)
OCN	3	2608	Solids :: Organic fraction	Clark	PL	Organic Fraction
OCN	3	3085	Solids :: Suspended	Clark	AL	Total Suspended Solids

MODIS DATA PRODUCTS
- OCEAN -

Discipline Group	Priority Rank	MODIS OUTPUT DATA PRODUCT INFORMATION				
		Prod #	Parameter :: Qualifier	Investigator	Time	Original Product Name (from Investigator)
OCN	3	3086	Solids :: Suspended	Clark	AL	Total Suspended Solids
OCN	3	3206	Attenuation coef@ 520nm :: Beam	Clark	PL	Beam Attenuation Coef c,520nm
OCN	3	3207	Attenuation coef@ 520nm :: Beam	Clark	PL	Beam Attenuation Coef c,520nm
OCN	3	3216	Backscatter coef :: Particulate	Parslow	PL	Particulate Backscattering coefficient
OCN	3	3217	Backscatter coef :: Particulate	Parslow	PL	Particulate Backscattering coefficient
OCN	3	3303	XXX :: Calibration data	Evans	AL	Calibration Data Sets
OCN	3	3317	Organic matter :: Flour curv	Hoge	AL	Organic Matter Flourescence Curvature
OCN	3	3318	Organic matter :: Flour curv	Hoge	AL	Organic Matter Flourescence Curvature
OCN	3	3319	Chlorophyll :: Abs line height	Hoge	PL	Absorption Line Height
OCN	3	3320	Chlorophyll :: Abs line height	Hoge	PL	Absorption Line Height

MODIS DATA PRODUCTS
- CALIBRATION -

Discipline Group	Priority Rank	MODIS OUTPUT DATA PRODUCT INFORMATION				
		Prod #	Parameter :: Qualifier	Investigator	Time	Original Product Name (from Investigator)
CAL	a	2338	Radiance :: MODIS-N Level-1B<3um	Salomonson	AL	At-Satellite Radiances<3um
CAL	a	2339	Radiance :: MODIS-N Level-1B<3um	Salomonson	AL	At-Satellite Radiances<3um
CAL	a	2340	Radiance :: MODIS-N Level-1B<3um	Salomonson	AL	At-Satellite Radiances<3um
CAL	a	2341	Radiance :: MODIS-N Level-1B<3um	Salomonson	AL	At-Satellite Radiances<3um
CAL	a	2342	Radiance :: MODIS-N Level-1B<3um	Salomonson	AL	At-Satellite Radiances<3um
CAL	a	2392	Radiance :: MODIS-N Level-1B<3um	Salomonson	AL	At-Satellite Radiances<3um
CAL	a	2393	Masking-shadowing :: Cloud	Salomonson	AL	At-Satellite Radiances<3um
CAL	b	2282	Masking-shadowing :: Cloud	Salomonson	AL	Cloud masking/shadowing (MODIS-N)
CAL	b	2283	Masking-shadowing :: Cloud	Salomonson	AL	Cloud masking/shadowing (MODIS-N)
CAL	b	2284	Masking-shadowing :: Cloud	Salomonson	AL	Cloud masking/shadowing (MODIS-N)
CAL	b	2285	Masking-shadowing :: Cloud	Salomonson	AL	Cloud masking/shadowing (MODIS-T)

MODIS DATA PRODUCTS
- SPECIAL CASES -

Discipline Group	Priority Rank	MODIS OUTPUT DATA PRODUCT INFORMATION				
		Prod #	Parameter :: Qualifier	Investigator	Time	Original Product Name (from Investigator)
ATM/LND	C/i	2338	Radiance :: Land leaving	Kaufman, Tanre	AL	Level-2 Land Leaving Radiances
ATM/LND	C/i	2339	Radiance :: Land leaving	Kaufman, Tanre	AL	Level-2 Land Leaving Radiances
ATM/LND	C/i	2340	Radiance :: Land leaving	Kaufman, Tanre	AL	Level-2 Land Leaving Radiances
Not Rated		2341	Sea ice :: Max extent	Salomonson	AL	Sea Ice (Max Total Extent)
Not Rated		2342	Sea ice :: Max extent	Salomonson	AL	Sea Ice (Max Total Extent)
Not Rated		2392	XXX :: Data char	Justice, Strahler	PL	Data Characteriz. (geometry, jitter)
Not Rated		2393	XXX :: Data char	Justice, Strahler	PL	Data Characteriz. (geometry, jitter)
Not Rated		2282	XXX :: Data char	Justice, Strahler	PL	Data Characteriz. (geometry, jitter)
Deleted-LND		2283	Emissivity :: Land	Wan	PL	Land Surface Emissivity
Deleted-LND		2284	Emissivity :: Land	Wan	PL	Land Surface Emissivity

MODIS-N
MODERATE RESOLUTION IMAGING SPECTROMETER (NADIR)

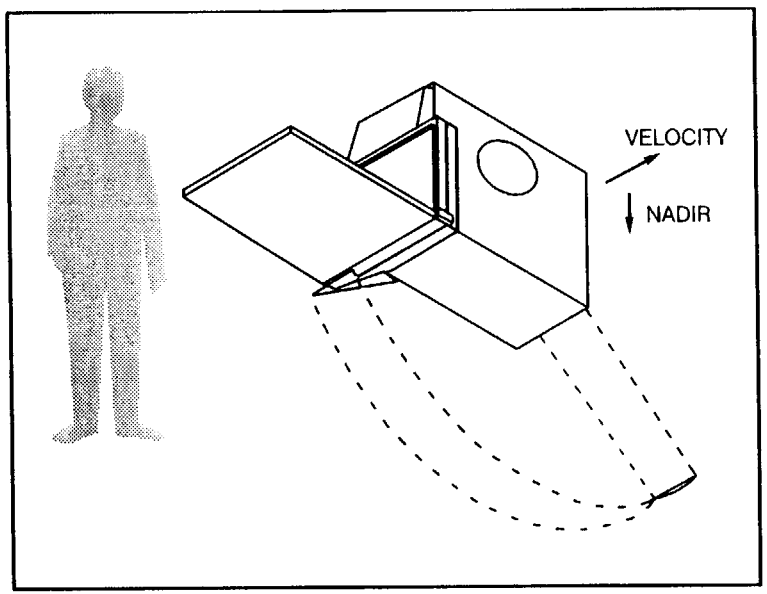

INSTRUMENTATION

MEASUREMENT

- ATMOSPHERE, LAND AND OCEAN PROCESSES

SPECTRAL RANGE 0.4 - 14.2μm

36 SPECTRAL BANDS (10 TO 500 nm BANDWIDTHS)

2 @ 250 IFOV	BOUNDARY (LAND, WATER AND CLOUDS)(659 & 865nm)
5 @ 500 IFOV	LAND AND CLOUDS (470-2130nm)
9 @ 1,000 IFOV	OCEANS (415-865nm)
3 @ 1,000 IFOV	ATMOSPHERE (905, 936 & 940nm)
17 @ 1,000 IFOV	ATMOSPHERE & SURFACE TEMPERATURE (3.7-14.2μm)

S/N 500 OR GREATER

5.5 Mbps ORBITAL AVERAGE DATA RATE

2330 KM SWATH WIDTH

±55° VIEW ANGLE

G137.015

MODIS-N SPECTRAL BANDS AND PRIMARY USES (1)

BAND	CENTER WAVELENGTH (nm)	BANDWIDTH (nm)	IFOV (m)	USE
1	659 +/-5	50	250	TEXTURE, EDGE DETECTION
2	865 +/-5	40	250	TEXTURE, EDGE DETECTION
3	470 +/-5	20	500	SOIL-VEG DIFFERENTIATION
4	555 +/-5	20	500	CHLOROPHYLL
5	1240 +/-6	20	500	LEAF CANOPY PROPERTIES
6	1640 +/-8	20	500	SNOW/CLOUD DIFFERENTIATION
7	2130 +/-10	50	500	SNOW/CLOUD DIFFERENTIATION

G137.016

MODIS-N SPECTRAL BANDS AND PRIMARY USES (3)

BAND	CENTER WAVELENGTH (nm)	BANDWIDTH (nm)	IFOV (m)	USE
20	3750 +/-19	180	1000	CLOUD & SURFACE TEMPERATURE
21	3750 +/-19	50	1000	FIRE DETECTION
22	3959 +/-20	50	1000	CLOUDS & SURFACE TEMPERATURE
23	4050 +/-20	50	1000	CLOUDS & SURFACE TEMPERATURE
24	4465 +/-22	50	1000	TROPOSPHERIC TEMP & CLOUD FRACTION
25	4515 +/-22	50	1000	TROPOSPHERIC TEMP & CLOUD FRACTION
26	4565 +/-23	50	1000	TROPOSPHERIC TEMP & CLOUD FRACTION
27	6715 +/-34	360	1000	MID TROPOSPHERIC HUMIDITY
28	7325 +/-37	300	1000	UPPER TROPOSPHERIC HUMIDITY
29	8550 +/-43	300	1000	LAND TEMPERATURE
30	9730 +/-49	300	1000	OZONE
31	11030 +/-55	300	1000	CLOUDS & SURFACE TEMP
32	12020 +/-60	300	1000	CLOUDS & SURFACE TEMP
33	13335 +/-67	300	1000	CLOUD HEIGHT & FRACTION
34	13635 +/-67	300	1000	CLOUD HEIGHT & FRACTION
35	13935 +/-70	300	1000	CLOUD HEIGHT & FRACTION
36	14235 +/-71	300	1000	CLOUD HEIGHT & FRACTION

THE HIGH RANGES OF BANDS 29, 31, AND 32 (DEFINED LATER) HAVE THE SAME WAVELENGTH REQUIREMENTS AS THE NORMAL RANGES OF THESE BANDS. THEY ARE USED FOR FIRES, VOLCANOS, ETC.

G137.017

MODIS-N PHYSICAL CHARACTERISTICS

- VOLUME — 1.6m x 1m x 1m
  (CROSSTRACK, ALONG-TRACK, HIGH)
  (ANY DEPLOYED STRUCTURES LESS THAN 1m EXTENSION)
- MASS — 200kg
- POWER — 225 WATTS (AVE.)
- DATA RATE — 11.0 Mbps DAY
  1.8 Mbps NIGHT

G137.018

MODIS-N SPECTRAL BANDS AND PRIMARY USES (2)

BAND	CENTER WAVELENGTH (nm)	BANDWIDTH (nm)	IFOV (m)	USE
8	415 +/-2	15	1000	BLUE OCEAN COLOR
9	443 +/-1	10	1000	LOW CHLOROPHYLL
10	490 +/-1	10	1000	NONLIN. CHLOROPHYLL
11	531 +/-2	10	1000	HIGH CHLOROPHYLL
12	565 +/-5	10	1000	CHLOROPHYLL BASELINE
13	653 +1,-2	15	1000	FLUORESCENCE BASELINE
14	681 +/-1	10	1000	FLUORESCENCE
15	750 +/-2	10	1000	ATMOSPHERIC CORRECTION
16	865 +/-5	15	1000	ATMOSPHERIC CORRECTION
17	905 +/-1	30	1000	WATER VAPOR
18	936 +/-1	10	1000	CLOUD TOP ALTITUDE/ CLOUD COMPOSITION
19	940 +/-1	50	1000	WATER VAPOR

G137.019

MODIS-N
MODERATE RESOLUTION IMAGING SPECTROMETER (NADIR)

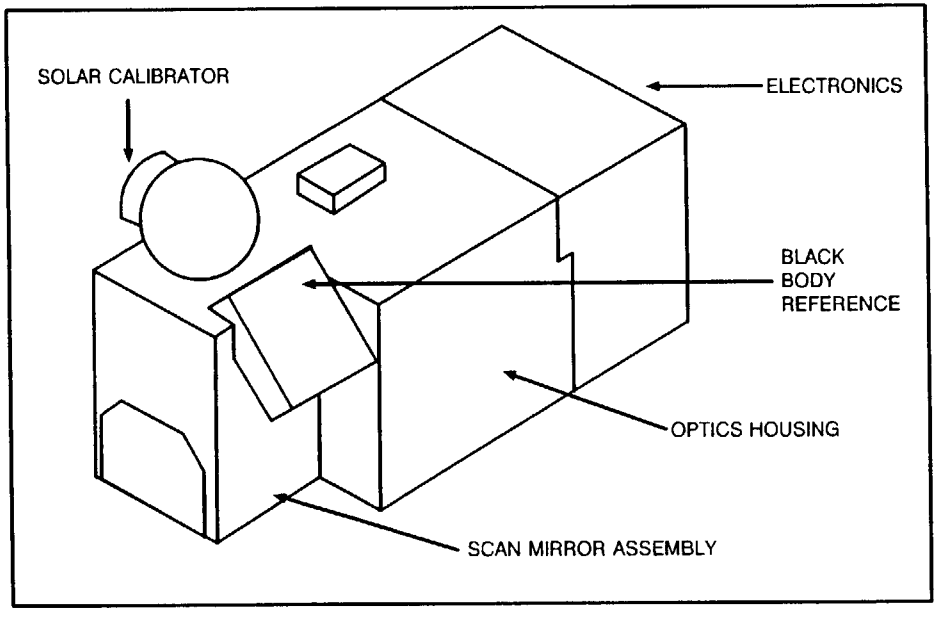

INSTRUMENT DESCRIPTION

SWATH WIDTH 2330 KM

SPECTRAL RANGE 0.4 - 14.2 um

36 SPECTRAL BANDS, 10 TO 500 nm BANDWIDTHS

RESOLUTIONS:

250M	2 CHANNELS
500M	5 CHANNELS
1000M	29 CHANNELS

MASS	200 KG
POWER	225 W
DATA RATE	11 MBPS (AVG DAY) 1.8 MBPS (AVG NIGHT)

G137.020