MODIS: Advanced Facility Instrument for Studies of the Earth as a System

VINCENT V. SALOMONSON, W. L. BARNES, PETER W. MAYMON, HARRY E. MONTGOMERY, AND HARVEY OSTROW

Abstract—**The Moderate Resolution Imaging Spectrometer (MODIS) is an Earth-viewing sensor that is planned as a facility instrument for the Earth Observing System (Eos) scheduled to begin functioning in the mid-1990's. The MODIS is composed of two mutually supporting sensors that cover a swath width sufficient to provide nearly complete two-day global coverage from a polar-orbiting, sun-synchronous, serviceable platform. High signal-to-noise ratios are to be provided, e.g., 500 to 1 or greater with 10–12 bit quantization over the dynamic ranges of the spectral bands. Utilizing serviceability, mission lifetime should be ten years.**

One of the MODIS sensors is termed MODIS-N, where "*N*" signifies nadir-viewing. With a 1780 km swath, MODIS-N provides images in 40 spectral bands in the spectral range of 0.4–14.2 μm applicable to land, ocean, and atmosphere studies and their interactions. The companion to MODIS-N is MODIS-T, where "*T*" signifies a tiltable field-of-view. This instrument also provides a 1780 km swatch and is tiltable ± 50 degrees along the spacecraft track. It provides high resolution spectrometric capability and covers the region from 400 to 1040 nm in 64 bands with 10 nm spectral resolution.

The development of the MODIS facility has proceeded from conceptual design studies (Phase-A) into detailed design studies (Phase-B). A science team will be formed in 1989 to provide guidance as the MODIS development proceeds into the construction and implementation phase (Phase-C/D).

I. Introduction

A RECENT STUDY for the Advisory Council of NASA included an objective "to obtain a scientific understanding of the entire Earth system on a global scale by describing how its component parts and their interactions have evolved, how they function, and how they may be expected to evolve on all times scales" [11]. The role of remote sensing, in providing observations of change occurring over the globe, has been described in a report submitted to the International Council of Scientific Unions (ICSU) [2]. It is expected that spaceborne remote sensing will play a major role in Earth science studies. Because many Earth processes involve phenomena that evolve rapidly (commonly on the order of days as opposed to months or years), spaceborne sensors can provide unique and useful, even essential, observations that will lead to improved understanding of Earth and atmospheric processes [3]–[8].

An Earth Observing System (Eos) is planned for launch in the mid-1990's that would augment and improve upon existing satellites operated by the National Oceanic and Atmospheric Administration (NOAA) and the National Aeronautics and Space Administration (NASA). In a report by the Eos Science and Mission Requirements Group it is noted that global data sets useful for hydrology, oceanography, meteorology, and other disciplines should be provided by Eos sensor systems [9]. One of the key sensor groups in Eos is the Surface Imaging and Sounding Package (SISP). Included in SISP is the MODIS sensor facility, which has been configured specifically for Earth system science studies including interactions of land and ocean surfaces with the atmosphere.

A MODIS Instrument Panel was formed in 1984 and in its final report [10] has defined the scientific requirements and generated more specific sensor parameters. This paper will describe the MODIS instrument based on the currently defined scientific requirements and some initial conceptual design studies.

II. The MODIS Instrument Concept

To achieve the goals and satisfy the scientific requirements stated previously, the MODIS sensor facility must provide global, long-term repetitive surveys of the Earth. The MODIS heritage is derived from sensors such as the Landsat Multispectral Scanner (MSS) and Thematic Mapper (TM), the NOAA Advanced Very High Resolution Radiometer (AVHRR), High Resolution Infrared Sounder (HIRS), and the Nimbus Coastal Zone Color Scanner (CZCS). Each of these sensors has provided data sets that span several years. The MODIS, therefore, must be designed not only to improve upon these sensors, but also extend their data sets so that a useful observation record is extended into the 21st century.

The MODIS science requirements dictate two-day repeat coverage over the globe with 250, 500, and 1000 m spatial resolution channels that have sufficient dynamic range and spectral coverage to permit a wide range of land, ocean, and tropospheric and stratospheric phenomena to be studied. The dynamic range to be covered will require 10–12 bit quantization.

The requirement to avoid sun-glint and also provide continuous nadir viewing made it necessary to split MODIS into two separate instruments called MODIS-T (Tilt) and MODIS-N (Nadir). MODIS-T provides near complete two-day global coverage at 1-km resolution and is tiltable along-track up to ± 50 degrees off-nadir to avoid

Manuscript received June 9, 1988; revised August 15, 1988.
The authors are with the Laboratory for Terrestrial Physics, NASA/Goddard Space Flight Center, Greenbelt, MD 20771.
IEEE Log Number 8825552.

0196-2892/89/0300-0145$01.00 © 1989 IEEE

sun-glint over the oceans in addition to observing bidirectional reflectance of land surface features. For land, ocean, and atmospheric studies, MODIS-N must provide at least 35 bands to complement those on MODIS-T plus bands in the reflective infrared (1–3 μm) and emitted thermal infrared (4–15 μm).

MODIS must provide data over a period of 10 years or more so that daily, weekly, monthly, and interannual variations in land, ocean, and atmospheric phenomena may be better understood. This calls for extended instrument life that can be obtained either through improved reliability of design or through repair and/or replacement on the Eos platform by using the Space Shuttle or a comparable facility.

Based on the MODIS Instrument Panel requirements, MODIS-N and MODIS-T Phase-A feasibility studies were completed and reports published in 1985 [11], [12]. Descriptions of the two instrument concepts are provided in the following sections.

III. MODIS-T

An imaging spectrometer concept evolved during the Phase-A study. It provided complete coverage of the spectrum between 400 and 1040 nm in 64 bands each of 10 nm bandwidth using a solid-state area array detector. Table I summarizes the MODIS-T sensor parameters.

As presently envisioned, the MODIS-T would use a "whiskbroom" [13] scan to cover a 1780 km swath (see Fig. 1). This swath width provides nearly complete Earth coverage in two days from an 824 km orbital altitude [14]. Given a 64 × 64 element detector array that covers 64 km along-track per scan and a subpoint velocity of 6.6 km per s, the scan period is 9.7 s. A tilt accuracy equivalent to 0.1 IFOV will be provided. Calculations indicate that over the mid-range wavelengths (600–900 nm) signal-to-noise ratios of 800 : 1 are achievable. That figure drops off considerably on either side of the wavelength range because of the fall off in quantum efficiency of silicon photodetectors. The instrument weighs approximately 50 km (110 lbs).

MODIS-T is presently beginning a Phase-B, detailed design study at the NASA Goddard Space Flight Center. Some subsystem analyses and trade-offs have been reported [15]. A radiometric analysis of ocean scenes and typical land surfaces has led to the preliminary derivation of some MODIS-T engineering parameters that are listed in Table II. Additional details concerning a possible scan subsystem and the baseline optical design are given in the following sections.

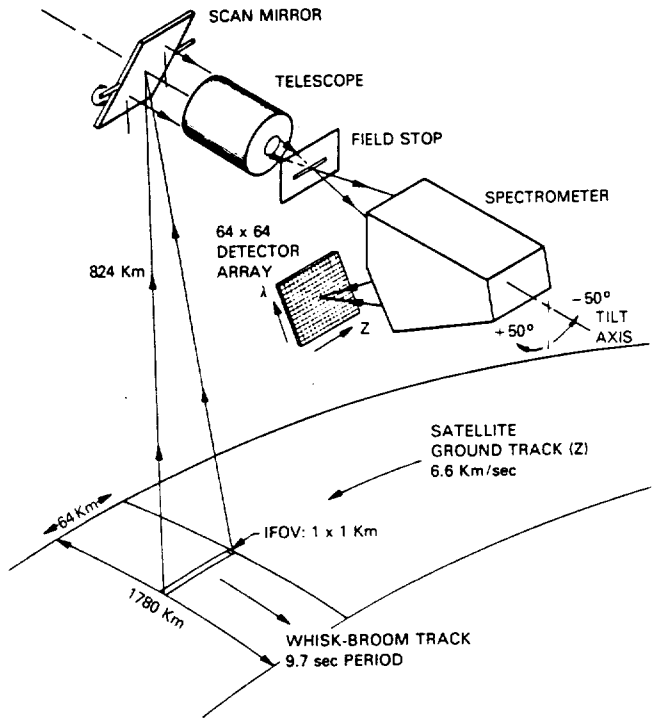

Fig. 1. MODIS-T.

TABLE I
MODIS-T ABBREVIATED REQUIREMENTS

Parameters	Specifications
IFOV	1 km square pixel at nadir (4.18 arcmin)
Swath	64 km along-track (4.45°); ±45° cross-track
Global coverage	> 90% in two days
Lifetime in orbit	Ten years (may be serviced)
Along-track pointing	±50°
Spectral range	400 nm to 1040 nm
Spectral resolution	10 nm (FWHM)
Image quality	MTF > 0.3 at nyquist frequency
Polarization sensitivity	2% max within ±30° of nadir (cross-track)
Dynamic range	2^{12}
Radiometric accuracy	±2% max
Radiometric precision	±0.01%
SNR	> 500:1 at 400 nm; 43.8 W/(m^2 sr μm)
	> 100:1 at 600 nm; 14.1 W/(m^2 sr μm)
	> 50:1 at 800 nm; 4.9 W/(m^2 sr μm)

A. Scan Subsystem

The MODIS-T scan subsystem design is driven by two science requirements: 1) a ±45 degree cross-track swath to provide nearly complete Earth coverage in two days; 2) a maximum of two-percent linear polarization sensitivity for all channels within ±30° of nadir cross-track and ±50° of nadir along-track. The wide, cross-track swath dictates a whiskbroom scan approach. A pushbroom scan approach would require multiple optical subsystems, each covering a portion of the swath and would result in a bulky instrument and difficulties in calibration and coregistration. A trade-off study of alternative whiskbroom scan configurations has been done [15]. A two-mirror compensating/active and a near-normal incidence scan configuration were found to be the most attractive candidates [16] for the whiskbroom scanner.

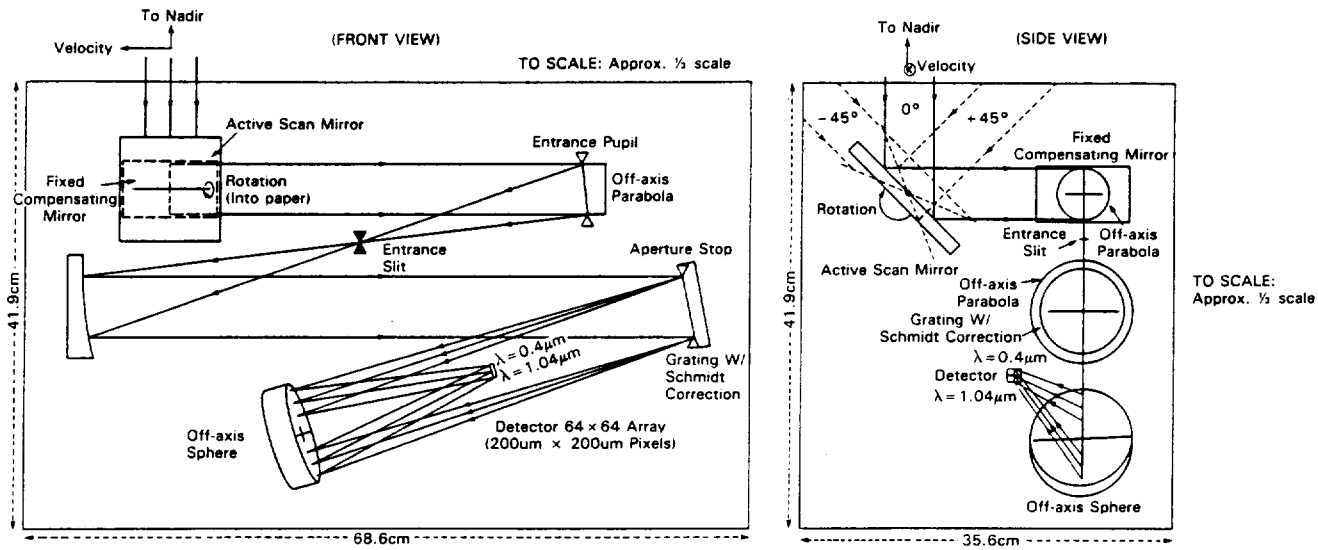

Fig. 2. Grating-type reflecting Schmidt design for MODIS-T (baseline concept).

TABLE II
MODIS-T DESIGN PARAMETERS

Required:	
Platform altitude	824 km
Orbit	98.7° inclination
Equatorial crossing	13:30
Swath width	90°
Derived:	
Collecting aperture (dia.)	47 mm
Detector element	200 x 200 μm
Optical transmission	37%
Scan efficiency*	45%
Integration time	2 msec
Focal plane noise	500 electrons
Optical MTF (at Nyquist frequency)	>.5

*Rocking scan mirror

The two-mirror compensating/active configuration is shown in Fig. 2 and consists of a pair of crossed 45 degree flats. The first flat is tilted to provide the cross-track scanning. It features low linear polarization sensitivity without image rotation. The second mirror cancels the polarization effects introduced by the first flat except for a small scan component. If required, lower linear polarization sensitivity can be obtained by reducing the incidence angles of the crossed flats.

The near-normal incidence configuration consists of a single flat viewed by a spectrometer at near-normal incidence (10 degrees). This flat is tilted about the axis intersected by the plane of incidence to provide cross-track scanning. It features very low linear polarization sensitivity. Scan distortion (an arc-shaped scan path) could be compensated by offset pointing the flat about the cross-track scan axis and its perpendicular axis.

The two-mirror compensating/active configuration is currently the preferred candidate for the scan subsystem. This conclusion may be modified after further investigation of the following factors: 1) integration of the scan subsystem with the spectrometer optical system and assessment of the system linear polarization sensitivity; 2) compatibility of the scan subsystem with the on-board calibration subsystem; and 3) scan efficiency (uni- or bi-directional rocking mirror or continuously rotating paddle wheel mirror).

B. Preliminary Baseline Optical Design

Trade-off studies, similar to those mentioned above, have led to the selection of a grating-type reflecting Schmidt imaging spectrometer for the baseline MODIS-T design (Fig. 2). The optical package is approximately 69 cm × 42 cm × 36 cm.

The fore-optics consist of a decentered parabola that also serves as the entrance pupil. A physical entrance slit defines the field-of-view of the instrument. Image quality at the entrance slit suffers from astigmatism, coma, and field curvature. However, nearly 100 percent of the energy from any point source in the field-of-view still is contained within the entrance slit. The spectrometer primary mirror is also a decentered parabola. This mirror recollimates the light and forms a confocal parabola pair with the fore-optic parabola. Abel and Hatch discuss the many attributes of confocal parabolas working at infinite conjugates [17].

The dispersing element is a conventionally ruled 100 line/mm plane grating blazed at a wavelength of 720 nm. It is the aperture stop of the optical design. The grating is positioned at an 11 degree angle of incidence in the spectral plane. The 400–1040 nm spectral range is dispersed over the angular subtense in the spectral plane equal to the spatial field-of-view in the spatial plane.

The grating also serves as a reflective Schmidt corrector. A fourth-order asphere term is added to the base planar grating substrate. A Schmidt spherical mirror is placed at its radius of curvature from the grating and centered along the first diffraction order of the central wavelength (720 nm). This sphere is decentered in the spatial plane to avoid obscuration by the detector.

The calculated worse case geometrical MTF at the focal plane is 0.91 at the Nyquist frequency. One-hundred (100) percent of the energy from a point source in the field-of-view is contained within less than one-half a pixel (worse case geometric spot diameter is 93 μm). The geometric distortion is about one-third of the pixel size. Field curvature, fifth-order spherical abberration, and residual third- and fifth-order coma limit the image quality. Despite these residuals, the image quality is well within the optical specifications.

IV. MODIS-N

A. Preliminary Baseline Design

MODIS-N is a relatively conventional scanning radiometer. The baseline Phase-A design [12] has a 20-cm aperture optics, a 56 × 26 centimeter elliptical scan mirror and an overall length slightly over 1 m (see Fig. 3). The scan mirror operates in a bidirectional mode and reverses direction at the end of each scan line in a manner similar to the Landsat Thematic Mapper (see Fig. 4). By scanning slowly along-track, coincident with the fast crosstrack scan, the pattern is corrected as shown. This requires a two-axis scan system that is shown in Fig. 5.

In the baseline concept three focal-planes are provided for the visible and near-infrared bands, the shortwave infrared bands, and the thermal infrared bands, respectively. Each spectral band utilizes an eight-element linear array for the 1-km spatial resolution bands, a 16-element array for 500-m spatial resolution bands and a 32-element array for the 250-m resolution bands. These arrays are all parallel to each other on the focal plane and scan an 8-km swath in the along-track direction over the 1780 km swath-width every 0.95 s based on use of a bi-directional scan-mirror system. The active scan time plus turnaround time equals approximately 1.2 s. The use of longer linear arrays would allow a reduction in scan-mirror velocity, but, as is also true in the case of MODIS-T, sensor calibration complexity would be increased.

Detector choices are still under study. The visible and near-infrared bands (VIS, NIR) would use silicon detectors. The short-wave infrared (SWIR) 1–3 μm bands may use HgCdTe, InSb, or possibly InGaAs detectors. The 3–5 μm medium wave infrared (MWIR) bands may employ InSb or HgCdTe detectors. However, the 5–14 μm long-wave infrared (LWIR) bands present a problem. In order to operate out to 14.2 μm, HgCdTe detectors are the preferred choice, and to minimize the cryogenic cooling load it is desirable that they be photovoltaic devices. However, such detectors are currently not available at the longer wavelengths and it will be necessary to use photoconductive devices. The additional heat load presented by photoconductive detectors will impact the cryogenic cooler. A passive radiative cooler is preferred. If a passive cryogenic cooler proves to be inadequate because of heat load

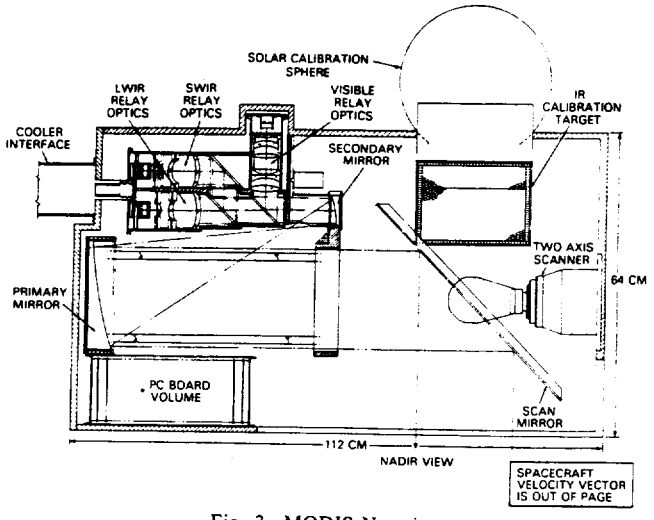

Fig. 3. MODIS-N optics.

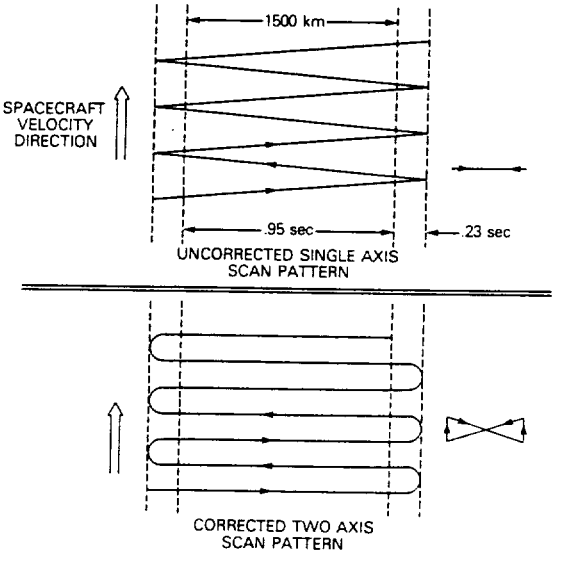

Fig. 4. MODIS-N scan pattern.

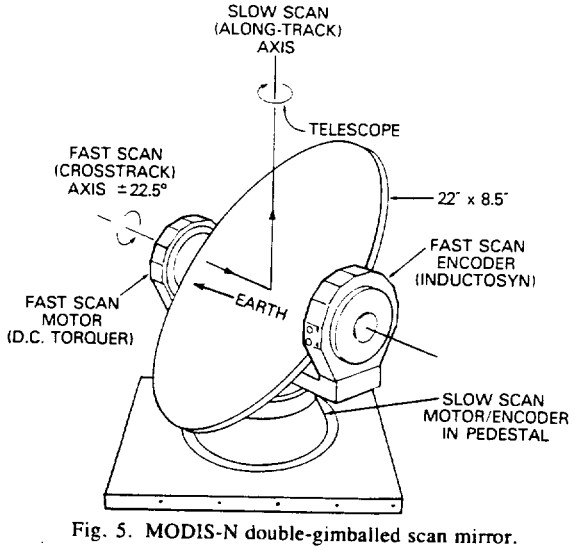

Fig. 5. MODIS-N double-gimballed scan mirror.

TABLE III
MAXIMUM RADIANCE FOR MODIS-N VISIBLE AND NEAR-IR CHANNELS (SOLAR ZENITH ANGLE = 22.5 DEGREES)

channel number	λ (μm)	Δλ (μm)	IFOV (m)	ρ_{max}	total spectral radiance, L (*)	path spectral radiance (*)	surface*** spectral radiance (*)	comments
1	0.470	0.02	500	0.950	561.2	270.8	290.3	soil-veg differentiation
2	0.555	0.02	500	0.950	490.9	182.9	308.0	green peak
3	0.675	0.02	500	0.950	413.7	118.6	295.1	chloro absorption
4	0.880	0.02	500	0.900	255.5	53.3	202.2	veg max reflectance
5	0.435	0.01	1000	0.100	96.5	72.8	23.8	low chlorophyll
6	0.490	0.01	1000	0.100	91.4	59.2	32.2	nonlin. chlorophyll
7	0.520	0.01	1000	0.100	76.4	45.1	31.3	high chlorophyll
8	0.565	0.01	1000	0:090	63.8	34.4	29.3	chlorophyll baseline
9	0.620	0.01	1000	0.090	55.9	26.5	29.4	sediment
10	0.665	0.01	1000	0.040	29.7	17.0	12.6	atmos/sediment
11	0.685	0.01	1000	0.040	27.4	15.2	12.2	chlorophyll fluorescence
12	0.765	0.01	1000	0.040	20.3	09.9	10.4	atmos correction
13	0.865	0.01	1000	0.040	15.5	06.5	9.0	atmos correction
14'**	0.754	0.01	1000	1.500	555.8	N/A	N/A	cloud optical depth
15'**	0.761	0.0012	1000	1.200	437.6	N/A	N/A	cloud altitude –
16'**	0.763	0.0012	1000	1.350	493.9	N/A	N/A	cloud altitude –
17'	0.700	0.10	1000	1.000	410.3	112.1	298.2	polarization
18'	0.700	0.10	1000	1.000	410.3	112.1	298.2	polarization
19'	0.700	0.10	1000	1.000	410.3	112.1	298.2	polarization
20	1.240	0.02	500	0.500	68.4	09.4	58.9	leaf canopy properties
21**	1.640	0.02	500	1.000	68.3	N/A	N/A	snow/cloud differentiation & cloud properties
22'	2.060	0.05	500	0.800	26.7	02.6	24.2	cloud altitude –
23**	2.130	0.05	500	0.800	21.9	N/A	N/A	snow/cloud differentiation & cloud properties
24'	0.575	0.15	250	0.950	480.9	171.0	309.9	texture, edge detection
25'	0.880	0.12	250	0.900	255.5	53.3	202.2	texture, edge detection

(*) = watts/square meter-steradian-μm
total spectral radiance = path spectral radiance + surface spectral radiance contribution at sensor [Reference B].
()' = Non-baseline
** = For these bands, ρ_{max} is an apparent reflectance and the total spectral radiance L is computed from $L = \rho E\cos(22.5)/\pi$. The values of E are obtained from Neckel & Labs [23] for 0.750-0.763 μm and from Labs & Neckel [24] for 1.64-2.13 μm.
*** = This is the radiance from the instantaneous field of view on the Earth's surface which is observed by the sensor after atmospheric attenuation.

TABLE IV
MODIS-N THERMAL CHANNELS

channel number	λ (μm)	Δλ (μm)	IFOV (m)	NEΔT (C)	T (K)	dL/dT (**)	NESR (*)	TMAX (K)	MAXRAD (*)	COMMENTS
26	3.750	0.090	1000	.27 @	275	7.1E-3	1.92E-3	335	1.71	clouds and surface temperature
27	3.959	0.050	1000	.20 @	275	10.7E-3	2.14E-3	328	1.89	clouds and surface temperature
28	4.050	0.050	1000	.20 @	275	12.6E-3	2.52E-3	328	2.16	clouds and surface temperature
29	4.465	0.050	1000	.25 @	250	8.7E-3	2.18E-3	264	0.336	tropospheric temp & cloud fraction
30	4.515	0.050	1000	.25 @	275	24.8E-3	6.20E-3	285	0.884	tropospheric temp & cloud fraction
31	4.565	0.050	1000	.25 @	275	26.4E-3	6.59E-3	302	1.76	tropospheric temp & cloud fraction
32	6.715	0.360	1000	.25 @	240	43.1E-3	10.76E-3	271	3.21	mid tropospheric humidity
33	7.325	0.300	1000	.25 @	250	68.8E-3	17.20E-3	275	4.47	upper tropospheric humidity
34	9.730	0.300	1000	.25 @	250	8.8E-2	2.19E-2	275	6.34	ozone
35	11.030	0.500	1000	.05 @	300	140.3E-3	7.02E-3	324	13.30	clouds & surface temperature
36	12.020	0.500	1000	.05 @	300	121.2E-3	6.06E-3	324	12.10	clouds & surface temperature
37	13.335	0.300	1000	.25 @	260	73.4E-3	18.30E-3	285	6.56	cloud height & fraction
38	13.635	0.300	1000	.25 @	250	64.6E-3	16.20E-3	268	5.03	cloud height & fraction
39	13.935	0.300	1000	.25 @	240	56.5E-3	14.10E-3	261	4.42	cloud height & fraction
40	14.235	0.300	1000	.25 @	220	43.9E-3	11.00E-3	238	2.96	cloud height &fraction

(*) = watts/square meter-steradian-μm

(**) = watts/square meter-steradian-μm-degree Kelvin

or inability to obtain an unobstructed space view, it would be necessary to consider a mechanical cooler. MODIS is attempting to obtain at least a ten-year data set with repair and refurbishment opportunities available at three-year intervals. A mechanical cooler with adequate reliability to provide a three-year operating life is questionable. It is possible to reduce the number of detectors in the arrays to minimize the heat load while increasing the mirror scan rate proportionally. These and other trade-offs will be addressed in the Phase-B detailed design studies.

At present 40 spectral bands are required and are defined in Tables III, IV, and V. These 40 bands can be collected in the functional groups described below.

Bands 5–13, as with all MODIS-N bands, provide a constant nadir-viewing set of "ocean-color" bands with 10 nm bandwidths at 1000 m spatial resolution. They complement the MODIS-T bands, particularly when MODIS-T is slewing fore or aft to avoid sun-glint from the ocean surface.

Bands 1–4 and 20–23 have 500 m spatial resolution, with widths between 20 and 50 nm, and are devoted primarily to observation of land surfaces and secondarily to

TABLE V
SIGNAL-TO-NOISE AND NOISE EQUIVALENT SPECTRAL RADIANCE (NESR) REQUIREMENTS FOR THE MODIS-N VISIBLE AND NEAR-IR CHANNELS (SOLAR ZENITH ANGLE = 70 DEGREES)

channel number	λ (μm)	$\Delta\lambda$ (μm)	$\rho_{typical}$	NE$\Delta\rho$ (%)	dL/dρ (*)	NESR (*)	total spectral radiance, L (*)	path spectral radiance (*)	surface*** spectral radiance (*)	snr reqd
1	0.470	0.02	0.030	0.100	124.4	0.12E-00	35.3	32.7	2.6	283
2	0.555	0.02	0.100	0.100	124.8	0.12E-00	29.0	19.7	9.3	232
3	0.675	0.02	0.065	0.100	119.3	0.12E-00	16.5	10.3	6.2	137
4	0.880	0.02	0.250	0.100	88.8	0.89E-01	25.2	6.8	18.4	283
5	0.435	0.01	0.051	0.050	100.3	0.50E-01	40.3	37.0	3.3	802
6	0.490	0.01	0.035	0.040	129.9	0.52E-01	32.7	29.5	3.2	629
7	0.520	0.01	0.028	0.030	122.7	0.37E-01	24.3	21.8	2.5	659
8	0.565	0.01	0.018	0.025	123.1	0.31E-01	17.8	16.2	1.7	579
9	0.620	0.01	0.006	0.020	122.0	0.24E-01	12.4	11.8	0.6	507
10	0.665	0.01	0.002	0.015	120.0	0.18E-01	9.5	9.3	0.2	528
11	0.685	0.01	0.002	0.015	116.0	0.17E-01	8.5	8.3	0.2	487
12	0.765	0.01	0.002	0.015	96.2	0.14E-01	5.4	5.2	0.2	373
13	0.865	0.01	0.001	0.010	83.7	0.84E-02	3.5	3.4	0.1	415
14'**	0.754	0.01	0.400	0.250	137.2	0.34E-00	54.9	N/A	N/A	160
15'**	0.761	0.0012	0.100	0.250	135.1	0.34E-00	13.5	N/A	N/A	40
16'**	0.763	0.0012	0.300	0.250	135.4	0.34E-00	40.6	N/A	N/A	120
17	0.700	0.10	0.250	0.150	117.6	0.18E-00	36.3	13.1	23.2	205
18	0.700	0.10	0.250	0.150	117.6	0.18E-00	36.3	13.1	23.2	205
19	0.700	0.10	0.250	0.150	117.6	0.18E-00	36.3	13.1	23.2	205
20	1.240	0.02	0.100	0.100	44.6	0.45E-01	5.4	1.4	4.0	120
21**	1.640	0.02	0.300	0.100	25.3	0.25E-01	7.6	N/A	N/A	300
22	2.060	0.05	0.100	0.150	10.8	0.16E-01	1.2	0.2	1.0	74
23**	2.130	0.05	0.100	0.150	10.1	0.15E-01	1.0	N/A	N/A	67
24	0.575	0.15	0.100	0.100	124.5	0.12E-00	27.3	17.9	9.4	219
25	0.880	0.12	0.250	0.100	88.8	0.89E-01	25.2	6.8	18.4	283

(*) = watts/square meter-steradian-μm
** = For these bands, $\rho_{typical}$ is an apparent reflectance and the total spectral radiance L is computed from $L = \rho E \cos(70)/\pi$. The values of E are obtained from Neckel & Labs [23] for 0.750-0.763 μm and from Labs & Neckel [24] for 1.64-2.13 μm.
*** = This is the radiance from the instantaneous field of view on the Earth's surface which is observed by the sensor after atmospheric attenuation.

studies of cloud characteristics. Spectrally there is overlap with bands 5–13. The dynamic range, however, is much larger than the ocean color bands to allow observation of dark soils as well as snow and ice-covered surfaces. Consequently the radiometric resolution/quantization capability is less than that for the ocean color bands. Channels 1–4 also complement MODIS-T observations by providing a constant nadir-view while MODIS-T may be slewing over an area to obtain bi-directional reflectance observations of land surfaces.

Bands 26–40, defined in Table IV, effectively duplicate spectrally those on the High Resolution Infrared Sounder (HIRS) on the NOAA operational meteorological satellites. These bands are used for studies of the troposphere and lower stratosphere and also provide tropospheric sounding and surface temperature measurements over the entire 1780 km swath at 1 km spatial resolution. The spatial resolution, in particular, is much improved over the present HIRS instrument. As a result, this should provide interesting insights into the variability of atmospheric constituents (e.g., water vapor) and temperature structure at this spatial resolution as well as allow for correction of surface temperature estimates in the 3–5 and 10–12 μm atmospheric "windows".

There are several bands that are more experimental or do not have as strong a heritage as others in the MODIS-N instrument. These are designated by a prime (′) symbol in Table III. Many of these bands are discussed in the MODIS Instrument Panel Report [10]. Channels 17–19 represent an experiment to observe polarization effects over large regions in the 700 nm spectral region. It would be scientifically interesting to observe Earth scene polarization from a free-flyer platform for the first time. Bands 14–16 will employ differential absorption in the oxygen-A band region to estimate cloud-top altitudes [18]. Bands 24 and 25 have been added based on arguments that supporting observations are needed at a higher resolution (e.g., 250 m) to complement the 500 and 1000 m resolution from other bands on MODIS-N and the 10–80 m resolution from SPOT, Landsat, or the Eos/High Resolution Imaging Spectrometer (described in this issue) in order to study the dynamics and extent of land transformations [19]. And finally, band 22 at 2.06 μm has been included because of its potential use for cloud altitude determination and for ascertaining properties of vegetation.

A specification has been prepared for MODIS-N that provides more detailed instrument requirements [20]. Based on this specification, Santa Barbara Research Center (Goleta, California) and Perkin-Elmer Corporation (Danbury, Connecticut) have been selected to conduct Phase-B, detailed design studies, beginning in July 1988.

B. Instrument Performance Requirements

Performance requirements for MODIS-N came from the science community [8]. The requirements are reflected in Tables III, IV, V, and VI and drive the sensor to 40 bands. Tables III and IV show the maximum values of scene radiance that together with the noise floor establishes the required dynamic range for the sensor. Tables IV and V present the specification value of Noise Equivalent Spec-

TABLE VI
MODIS CALIBRATION GOALS

Type of accuracy	VIS, NIR, SWIR	MWIR, TIR
Absolute	< 2% of max scene radiance (< 3% for polarization channels)	< 1% of max scene radiance
Relative		
Root Mean Square (RMS)	< NESR (see Tables 3 & 4)	<NESR
Detector to Detector Uniformity	<NESR	<NESR
Spectral Band to Spectral Band	< 0.5% at full scale < 1.0% at half scale	< 0.5% at full scale < 1.0% at half scale
Stability	< 1.0% (over 2 weeks and with 10° temperature excursions)	< 0.5% (over 2 weeks and with 10° temperature excursions)

tral Radiance (NESR) for the most difficult operational condition. The NE$\Delta\rho$ values shown in Table V are specification values and are required to be met at all scene conditions. Performance requirements for the visible and near infrared channels are given in Table V for a 70 degree solar zenith angle that represents low radiance conditions. The table shows typical surface reflectances and the corresponding noise equivalent delta reflectance (NE$\Delta\rho$) requirements for each of the spectral bands. The derivative of the total spectral radiance with respect to the surface reflectance ($dL/d\rho$) was multiplied by the NE$\Delta\rho$ to obtain the noise equivalent spectral radiance (NESR). The total spectral radiance observed at the sensor aperture is displayed in this table along with its two components, i.e., the path spectral radiance and the surface spectral radiance [21]. The required signal-to-noise ratio (SNR) shown in the last column was obtained from the ratio of the total spectral radiance and the noise equivalent spectral radiance (NESR). Table III lists the nominal maximum expected radiances for the sensor that are obtained at a solar zenith angle of 22.5 degrees.

Table IV shows the performance characteristics of the infrared channels. The noise equivalent delta temperature (NEΔT) and corresponding brightness temperature are indicated for each band. The derivative of the expected radiance with respect to brightness temperature (dL/dT) was multiplied by the NEΔT to obtain the noise equivalent scene spectral radiance (NESR). The maximum expected scene temperatures (TMAX) were extracted from High Resolution Infrared Sounder (HIRS) data and used to compute maximum scene radiances.

Requirements for MODIS calibration are twofold, spectral, and radiometric. Spectral calibration entails making a determination of the wavelength range of energy falling on each detector, which may change with variations in instrument temperature or lifetime. This calibration must be done onboard and minimally to an accuracy of ± 5 nm. Accordingly, MODIS-N will be equipped with an on-board spectral calibrator. Specific calibrator design concepts are still being addressed. MODIS-N will also be equipped with visible and thermal targets to provide onboard radiometric calibration. A solar illuminated diffuser will be the primary on-board calibrator for the visible through the SWIR spectral regions. It will provide an end-to-end system calibration using the full aperture and full field of view of the system. Two reference calibration points for the MWIR and LWIR thermal channels will be cold space and a blackbody-simulating surface that will fill the aperture thereby providing an end-to-end calibration for these channels.

Since accurate calibration is essential for quantitative parameter extraction, it must be as good as is practically achievable. Table VI presents MODIS-N calibration accuracy goals. The calibration error is composed of a bias (absolute error) about the true mean radiance and a root mean square (rms) or relative error about the biased mean. When viewing an extended scene of uniform radiance all detectors within a given spectral band will have an rms variation about the mean that is no greater than the value indicated in Table VI. These are very difficult goals, but sufficient progress is being made to present them as requirements for consideration in the Phase-B detailed design study. If they cannot be met, then the scientific community will have to assess the impact of providing a lesser capability. The absolute accuracies given in Table VI are a percentage of the maximum scene radiances shown in Tables III and IV. Relative calibration accuracy, i.e., root mean square (rms) and detector-to-detector, must be less than the noise equivalent scene radiance (NESR) values provided in Tables IV and V. The other two relative calibration accuracies, band-to-band and temporal stability, are given as a percentage of full and half-scale values.

V. DATA

The MODIS is an Eos facility instrument and must produce science data products. The output data are divided into two major categories, Level 1 and Levels 2–4 [22]. All MODIS data will be processed to Level 1A. Level 1A consists of radiometrically calibrated and geometrically located pixels. A subset of the MODIS data will be processed into a series of routine science products (Levels 2–4) that are still being defined. All processing will occur at the Eos Data Information System (EosDIS) using algorithms supplied by the MODIS Science Team.

Eos guidelines call for a 100-percent duty cycle for MODIS. This implies that MODIS-N thermal channel data will be transmitted full time and that MODIS-T and MODIS-N visible and near-IR channel data will be transmitted during the 30 percent of each orbit with sufficient reflected solar radiance to give reasonable signal-to-noise ratios. Using this assumption and 40-percent oversampling crosstrack, the 104 MODIS channels will generate 8×10^{11} bits/day. This is equivalent to more than 500 computer tapes each day (6250 bytes/in, 2400 ft) for the anticipated ten-year Eos mission. Of course, it is not likely that magnetic computer tapes will be used to store the data, probably some form of optical disk technology will be used that will result in much more compact data storage. The EosDIS guidelines call for all of the MODIS data to be processed to at least Level-1 within 48 h. The task of developing a data facility to address this task is at

least as complex as that of developing the MODIS sensors.

VI. Summary and Conclusions

The MODIS facility for the Earth Observing System (Eos) is a key element that supports ambitious goals related to studying the Earth as a system.

The MODIS-T (64 spectral bands) and the MODIS-N (40 bands) combine to provide a multispectral observing capability that will be of considerable use in land, ocean and atmospheric research. Among the many observables will be global vegetation; snow and ice extent; land dynamics; ocean color; sea surface and land surface temperatures; tropospheric temperature profiles; and water vapor and ozone in the stratosphere. Providing near global coverage every two days at 250–1000 m spatial resolution over a ten-year lifetime should produce data sets of significant value in gaining a better quantification and understanding of a wide variety of processes occurring in the atmosphere and on the surface of the Earth.

Acknowledgment

As in all such efforts, the development of MODIS-N and T entails a great deal of collaboration. The authors particularly acknowledge and express appreciation for the guidance and information derived from discussions with C. MacKenzie (Eos Project Manager), M. Donohoe (Eos Instrument Manager), J. Krehbiel (former MODIS-T Instrument Manager) and many others. We express appreciation to J. Wentz and M. Walsh for careful typing of the manuscript.

References

[1] F. Bretherton, "Earth system science: A close view," Report of the Earth System Sciences Committee to the NASA Advisory Council, National Aeronautics and Space Administration, Washington, DC, 1988 (available from Code EPM-20, NASA Headquarters, Washington, DC, 20546).

[2] S. I. Rasool, "Potential of remote sensing for the study of global change," *Advances in Space Research*, vol. 7, pp. 1–97, 1986.

[3] C. O. Justice, J. R. G. Townshend, B. Holben, and C. J. Tucker, "Analyses of the phenology of global vegetation using meteorological satellite data," *Int. J. Remote Sensing*, vol. 6, pp. 1271–1318, 1985.

[4] C. J. Tucker, I. Y. Fung, C. D. Keeling, and R. H. Gamma, "Relationship between atmospheric CO_2 variations and a satellite-derived index," *Nature*, vol. 319, pp. 195–199, 1986.

[5] J. R. G. Townshend, C. O. Justice, and V. Kalb, "Characterization and classification of South American land cover types using satellite data," *Int. J. Remote Sensing*, vol. 7, pp. 1189–1207, 1987.

[6] J. Susskind and D. Reuter, "Retrieval of sea surface temperature from HIRS-2/MSU," *J. Geophys. Res.*, vol. 90, pp. 11602–11608, 1985.

[7] J. Susskind, D. Reuter, and M. T. Chahine, "Cloud fields retrieved from analyses of HIRS-2/MSU sounding data," *J. Geophys. Res.*, vol. 92, pp. 4035–4050, 1987.

[8] W. E. Esaias, G. C. Feldman, C. R. McClain, and J. A. Elrod, "Monthly satellite derived phytoplankton pigment distribution for the North Atlantic Ocean Basin," *EOS*, vol. 67, pp. 835–837, 1986.

[9] D. Butler and R. E. Hartle, *Earth Observing System: Science and Mission Requirements Working Group Report, Vol. 1*, NASA TM-86129, NASA/Goddard Space Flight Center, Greenbelt, MD, (Government Accession No. N84-30450).

[10] W. Esaias and W. Barnes, "Moderate resolution imaging spectrometer (MODIS) instrument panel report," *Earth Observing System Reports*, vol. IIb, 1986.

[11] OAO Corporation, "MODIS definition study," Final Rep., NASA Contract NAS 5-27157, Modification no. 5, OAO Corp., Greenbelt, MD, 1985.

[12] ITT Aerospace, "Phase-A study report on the MODIS-N spectrometer for the Earth observing system," ITT Aerospace/Optical Div., Fort Wayne, IN, 1985.

[13] K. Numendal, "Wide-field imagers—pushbroom or whiskbroom scanners," *Proc. SPIE*, vol. 226, p. 38, 1980.

[14] V. V. Salomonson, W. L. Barnes, H. E. Montgomery, and H. Ostrow, "Moderate resolution imaging spectrometer-nadir (MODIS-N): Progress 1988," in *Proc. SPIE Symp.* (Orlando, FL), Apr. 1988.

[15] P. W. Maymon, S. P. Neeck, and J. C. Moody, Sr., "Optical system design alternatives for the moderate-resolution imaging spectrometer-tilt (MODIS-T) for the Earth observing system (Eos)," in *Proc. SPIE Symp.* (Orlando, FL), Apr. 1988.

[16] W. Egan, *Photometry and Polarization in Remote Sensing*. New York: Elsevier, 1985, pp. 31–32.

[17] I. R. Abel and M. R. Hatch, "The pursuit of symmetry in wide-angle reflective optical designs," *Proc. SPIE*, vol. 237, pp. 273–274, 1980.

[18] M.-L. C. Wu, "Remote sensing of cloud top pressure using reflected solar radiation in the oxygen-A band," *Journal of Climate and Applied Meteorology*, vol. 24, pp. 539–546, 1985.

[19] J. R. G. Townshend and C. O. Justice, "Selecting the spatial resolution of satellite sensors required for global monitoring of land transformations," *Int. J. Remote Sensing*, vol. 9, pp. 189–236, 1988.

[20] Goddard Space Flight Center, "Moderate resolution imaging spectrometer-nadir (MODIS-N) specification for a Phase-B study," 1987. (Available from Sensor Concepts and Development Branch, NASA, Goddard Space Flight Center, Code 625, Greenbelt, MD 20771.)

[21] R. Fraser, personal communication, GSFC.

[22] Eos Data Panel, "Earth observing system data and information system, vol. IIa," Tech. Memo. 87777, National Aeronautics and Space Administration, Washington, DC 1986.

[23] H. Neckel and D. Labs, "The solar radiation between 3300 and 12,500 angstroms," *Solar Physics*, vol. 90, pp. 205–258, 1984.

[24] D. Labs and H. Neckel, "Transformation of the absolute solar radiation data into the 'international practical temperature scale of 1968,'" *Solar Physics*, vol. 15, pp. 79–87, 1970.

*

Vincent V. Salomonson received the B.S. degree in agricultural engineering from Colorado State University, Fort Collins, in 1959, the B.S. degree in meteorology from the University of Utah, Salt Lake City, in 1960, the M.S. degree in agricultural engineering from Cornell University, Ithaca, NY, in 1964 and the Ph.D. degree in atmospheric science from Colorado State University in 1968.

He is currently the Deputy Director for Earth Sciences in the Space and Earth Sciences Directorate at the Goddard Space Flight Center/NASA. He served as the Project Scientist for Landsat 4 and 5 from 1977 to 1988 and the Chief of the Laboratory for Terrestrial Physics from 1980 to 1988. At Goddard he has engaged in studies seeking to assess the applications of space technology to research in the atmospheric and earth sciences for the past 20 years. His publication record shows over 100 publications in scientific journals, conference proceedings, and NASA reports. For the past two years he has led and coordinated the research and development efforts at Goddard associated with the Moderate Resolution Imaging Spectrometer (MODIS).

In 1986 Dr. Salomonson received the IEEE Geoscience and Remote Sensing Society Distinguished Achievement Award in recognition of significant technical contributions to satellite remote sensing.

W. L. Barnes received the Ph.D., degree in physics from Florida State University, Tallahassee, and the B.S. and M.S. degrees in physics from North Texas State University, Denton.

He was a member of the Professional Staff of the Southwest Research Institute, San Antonio, TX, for four years and has held a variety of positions in science, engineering and management at the Goddard Space Flight Center of the National Aeronautics and Space Administration over the past 17 years. He is presently head of the Sensor Concepts and Development Branch of the Laboratory for Terrestrial Physics and has been working on establishing requirements and developing preliminary design concepts for MODIS-T and MODIS-N for the last four years.

*

Peter W. Maymon received the M.S. degree in physics from the University of Maryland and the B.S. degree in applied physics (concentration in optics) from Georgia Institute of Technology, Atlanta.

He worked four years at Perkin-Elmer Optical Operations Directorate, Wilton, CT as an Optical Metrologist prior to attending graduate school. While at the University of Maryland he served as an Optical Consultant for the Quantum Electronics Department in the School of Physics. Currently, he is a senior member of NASA/Goddard's Optical Design Section where he is engaged in the optical design of several spaceborne instruments.

Mr. Maymon is a member of SPIE and OSA.

Harry E. Montgomery received the Ph.D. degree in aerospace engineering from Catholic University of America, Washington, DC, and the M.S. and B.S. degrees in mechanical engineering from Johns Hopkins University, Baltimore, MD.

He has contributed both technical and managerial support to various satellite programs, including: interplanetary monitoring probe (IMP), earth resources technology satellite (ERTS), geostationary operational satellite (GEOS), etc. He is currently managing the Phase-B studies for MODIS-N and providing technical and scientific analysis to the Earth Observing System (Eos).

*

Harvey Ostrow received the B.E.E. and M.E.E. degrees from the City College of New York.

While at the Goddard Space Flight Center, he has been closely associated with the development of numerous spaceborne imaging radiometers including the Landsat RBV and MSS and has been responsible for a variety of technology development programs in the areas of remote sensing systems, focal plane arrays, and imaging radiometry. He is presently a Senior Systems Engineer in the Laboratory for Terrestrial Physics and is responsible for performance trade-offs and analyses for the MODIS-N and MODIS-T designs.