MODIS SCIENCE DATA SUPPORT TEAM PRESENTATION

November 8, 1991

AGENDA

1. Action Items
2. MODIS Airborne Simulator (MAS)
3. MODIS SDST Workplan
4. NetCDF Status
5. MODIS Science Computing Facility Plan

ACTION ITEMS:

08/30/91 [Lloyd Carpenter and Team]: Draft a schedule of work for the next 12 months. Include primary events and milestones, documents to be produced, software development, MAS support, etc. (An update is included in the handout.) STATUS: Open. Due date 09/27/91.

10/04/91 [Phil Ardanuy and Team]: Prepare questions for the project to characterize the spacecraft position and attitude knowledge and the MODIS pointing knowledge in a way that will facilitate the evaluation of methods such as image registration to meet the science team requirements for earth location. (A letter to the project has been prepared, 10/28/91.) STATUS: Open. Due date 10/18/91.

10/04/91 [Tom Goff]: Examine and describe the Miami DSP navigation scheme in relation to MODIS navigation. Status: Open. Due date 11/15/91.

10/04/91 [Tom Goff]: Contact Angel Li (currently at GSFC) to ask questions regarding the DSP. (Angel Li was contacted. Tom will report on the discussion.) Status: Open. Due date 10/18/91.

Progress on MAS Level-1B processing system development

Progress up to 7 November 1991

(1) MAS software development

On November 5 I received the first MAS Level-1A dataset from Ames. This was acquired during a test flight over California and Nevada on October 31. The data comprised two 6250 bpi 9-track magnetic tapes and supplementary documentation. I received the corresponding INS dataset on 6250 bpi 9-track magnetic tape on November 6. All of the MAS Level-1A data and INS data has been read from the tapes and stored on the LTP VAX. Processing of the data so far has involved the following steps.

(a) Creating 'quicklook' images from the raw Level-1A 8 bit data.

Channel 2 (0.680 microns) was examined to determine flight coverage and data integrity. A photocopy print of a full resolution subset of the channel 2 data is included overleaf. This region shown is Lake Tahoe, Nevada. The image is a 'negative' - e.g. the darkest areas are snow cover, the lightest areas are water surface. Composite images of the entire flight, subsampled to every 10th line and pixel were also created.

(b) Examining the blackbody data for thermal infrared channels.

In order to estimate the quality of the thermal infrared data, plots were made of the cold and hot blackbody data on the first MAS tape. Copies are shown overleaf.

(c) Examining the INS data to determine straight line flight track boundaries.

The INS heading data was plotted versus time, and three straight line flight tracks identified. The tracks contain 4910, 17200, and 2201 scanlines respectively.

(d) Computing regressions for INS data within the straight line flight track boundaries.

(e) Computing slopes and intercepts for calibration from counts to radiance for all channels.

Spectral response curves were simulated using a Gaussian function and the spectral response half power point information. The thermal infrared bands were calibrated using this information. No calibration information for the visible/near-IR bands has yet been obtained from Ames. Values of 0.1 for slope and 0.0 for intercept were used for these bands.

(f) Computing calibrated radiances, geolocations, and writing to a Level-1B netCDF file.

At present the first flight track has been processed to the Level-1B stage. For a first attempt, every 10th scanline was processed. There is a significant computing overhead involved in processing every scanline of MAS data, compared to processing every third line of MAMS data as was done in testing.

No significant problems have been encountered by the processing software in the processing of the MAS data to date.

(2) Copying of MAS Level-1B netCDF files to magnetic tape

Investigation of possible formats for Level-1B magnetic tapes indicate that a fixed length block containing fixed length records is most portable. There are several methods possible for creating these tapes on the VAX, and these have been tested.

One method is to read the data using a C program, which reblocks the data to 512 byte fixed length records. This can be done direct from netCDF file on disk to magnetic tape. Tests have shown that this is a reliable method for copying the netCDF files to magtape.

Another method is to change the header attributes of the netCDF file in VMS, only for the purpose of copying to magtape. This method has had some preliminary testing, but requires further investigation. The advantage is that the VMS system COPY utility may be used to copy the file to disk, which appears to be the fastest method available.

In summary, a reliable mechanism exists for copying netCDF files to magnetic tape in a portable format. These tapes can be either 9-track 6250 bpi or Exabyte.

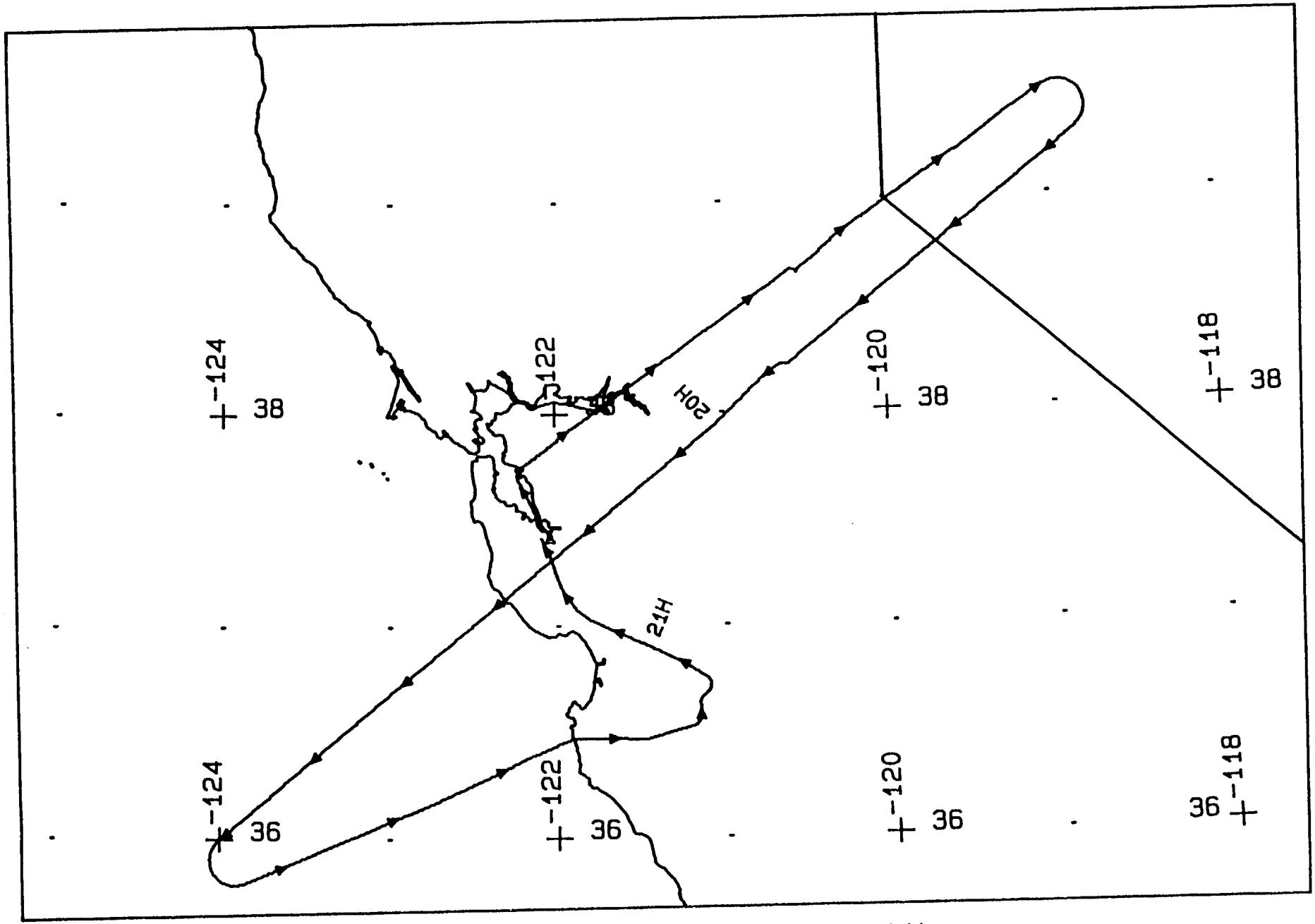

FLIGHT 92-017 31 October 1991 A/C 709 FIRE Functional Check Flight

3.7 System Sensitivity Performance

CALCULATION & TEST RECORD

OUT PUT CHAN #	SPECTRAL CHANNEL #	BAND EDGES (μm)	CALIB. SOURCE RADIANCE (note 1&2)	MEASURED SIGNAL (mv)	MEASURED RMS NOISE mv @SCAN SPEED 6.25	25	CALCULATED NER @ SCAN SPEED (note 3) 6.25	25
1 A	-	----	----	----				
2 B	1	0.675-0.685	4.27E-06	1.10E+03	18.7	25.2	7.3E-08	9.8E-08
3 C	2	1.605-1.655	2.75E-06	1.90E+03	1.4	2.9	2.0E-09	4.2E-09
4 D	8	1.905-1.955	1.70E-06	2.44E+03	2	4.3	1.4E-09	3.0E-09
5 E	11	2.055-2.105	1.43E-06	1.10E+03	1.2	2.7	1.6E-09	3.5E-09
6 F	12	2.105-2.155	1.32E-06	9.28E+02	1.2	2.6	1.7E-09	3.7E-09

			DELTA TEMP (deg C)				CALCULATED NETD (deg C) (note 4)	
7 G	23	3.675-3.825	15.0	1.75E+03	77.5	119	0.66	1.02
8	29	4.575-4.725	15.0	1.90E+03	28.5	44.5	0.23	0.35
9	28	4.325-4.575	15.0	1.80E+03	29.5	46	0.25	0.38
10	34	8.60-9.00	15.0	2.30E+03	28	42	0.18	0.27
11	39	10.7-11.2	15.0	2.51E+03	45	70	0.27	0.42
12	41	11.7-12.2	15.0	1.48E+03	55	85	0.56	0.86

NOTES:

1. *Calibration source for channels 1-10 AB532 S/N ____*
2. *In W / cm² * nm * sr*
3. *NER = Noise Equivalent Radiance: in W / cm² * nm * sr*
   NER = RADIANCE / (SIGNAL / NOISE)
4. *NETD = Noise Equivalent Temperature Difference*
   NETD = DELTA TEMP / (SIGNAL / NOISE)

Tests Performed & Verified By: _____
Daedalus Enterprises, Inc.

System S/N: 003 Spectrometer 001 Witness: _____
Date: 10-10-91

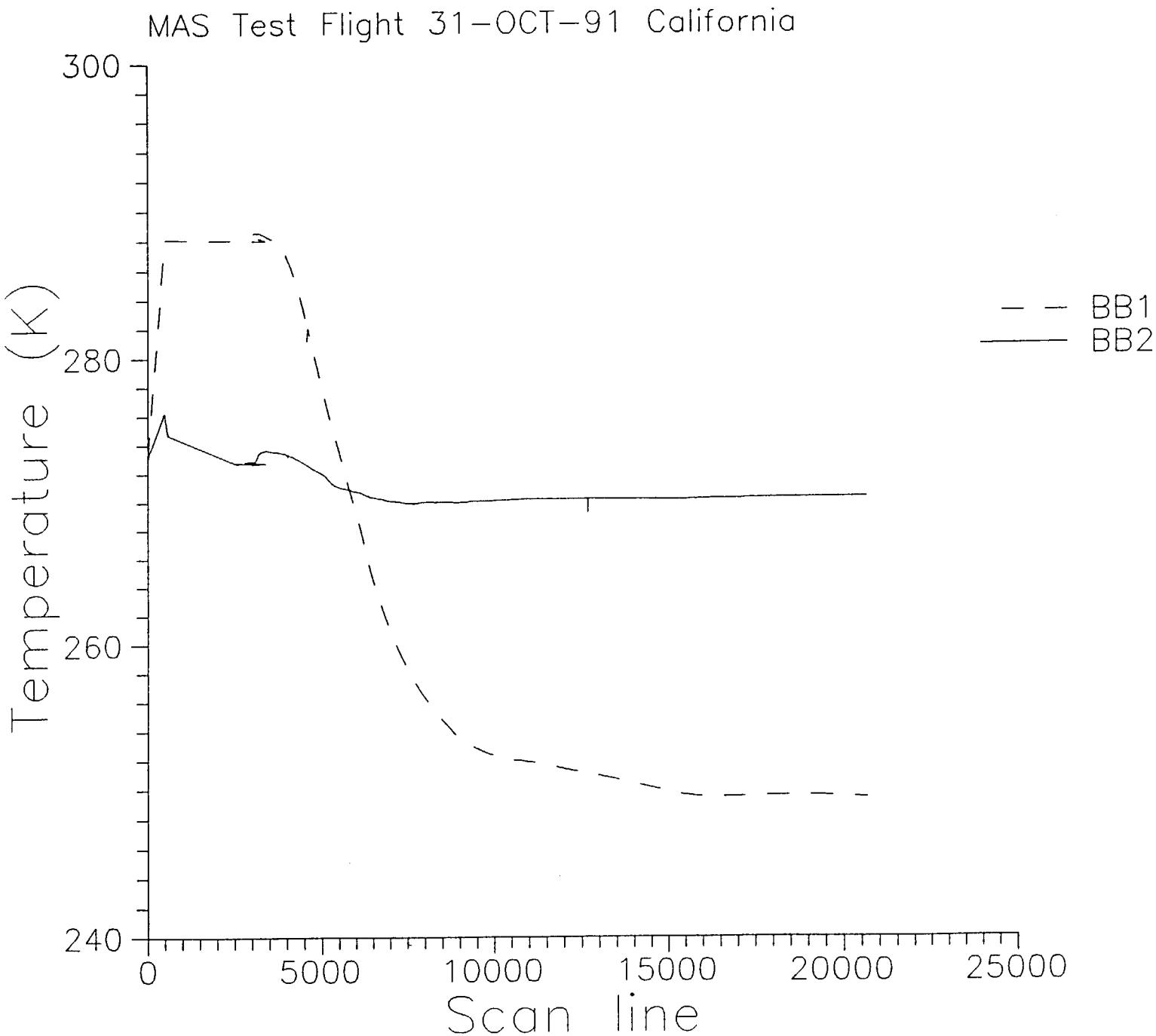
MAS Test Flight 31-OCT-91 California
300
280
260
240
Temperature (K)
0
5000
10000
15000
20000
25000
Scan line
BB1
BB2

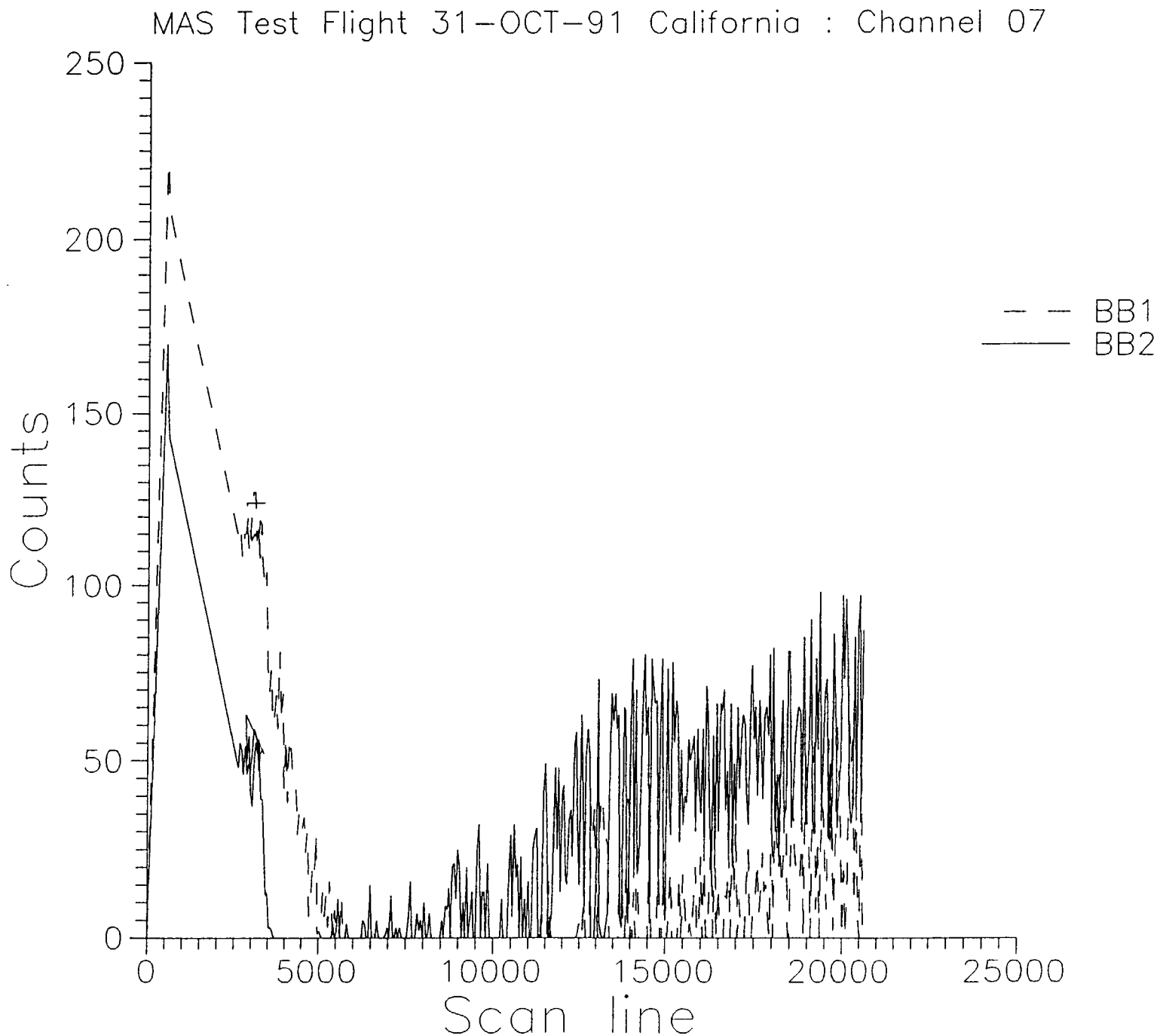
MAS Test Flight 31-OCT-91 California : Channel 07
250
200
150
100
50
0
Counts
0
5000
10000
15000
20000
25000
Scan line
BB1
BB2

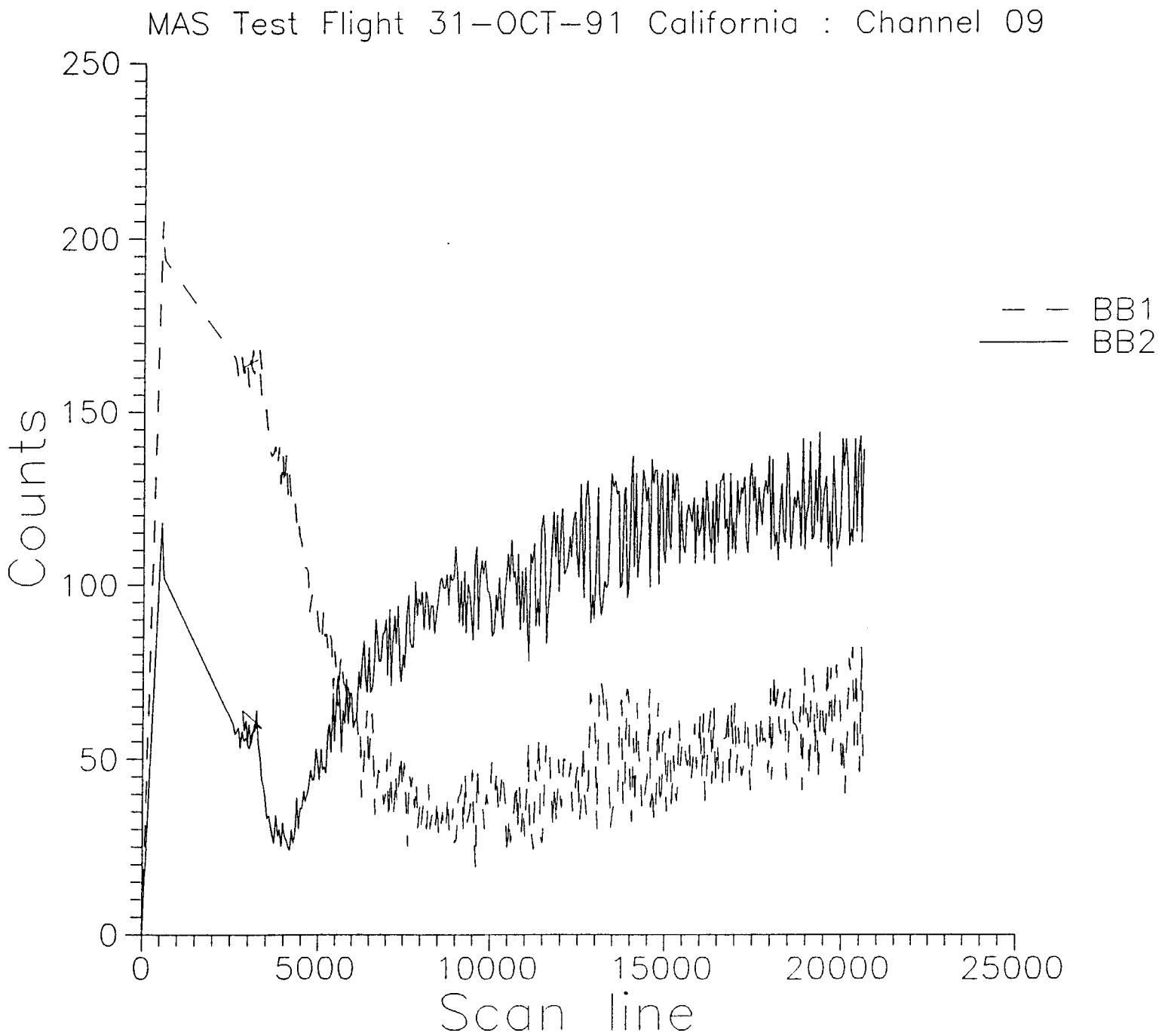
MAS Test Flight 31-OCT-91 California : Channel 09
250
200
150
100
50
0
Counts
0
5000
10000
15000
20000
25000
Scan line
BB1
BB2

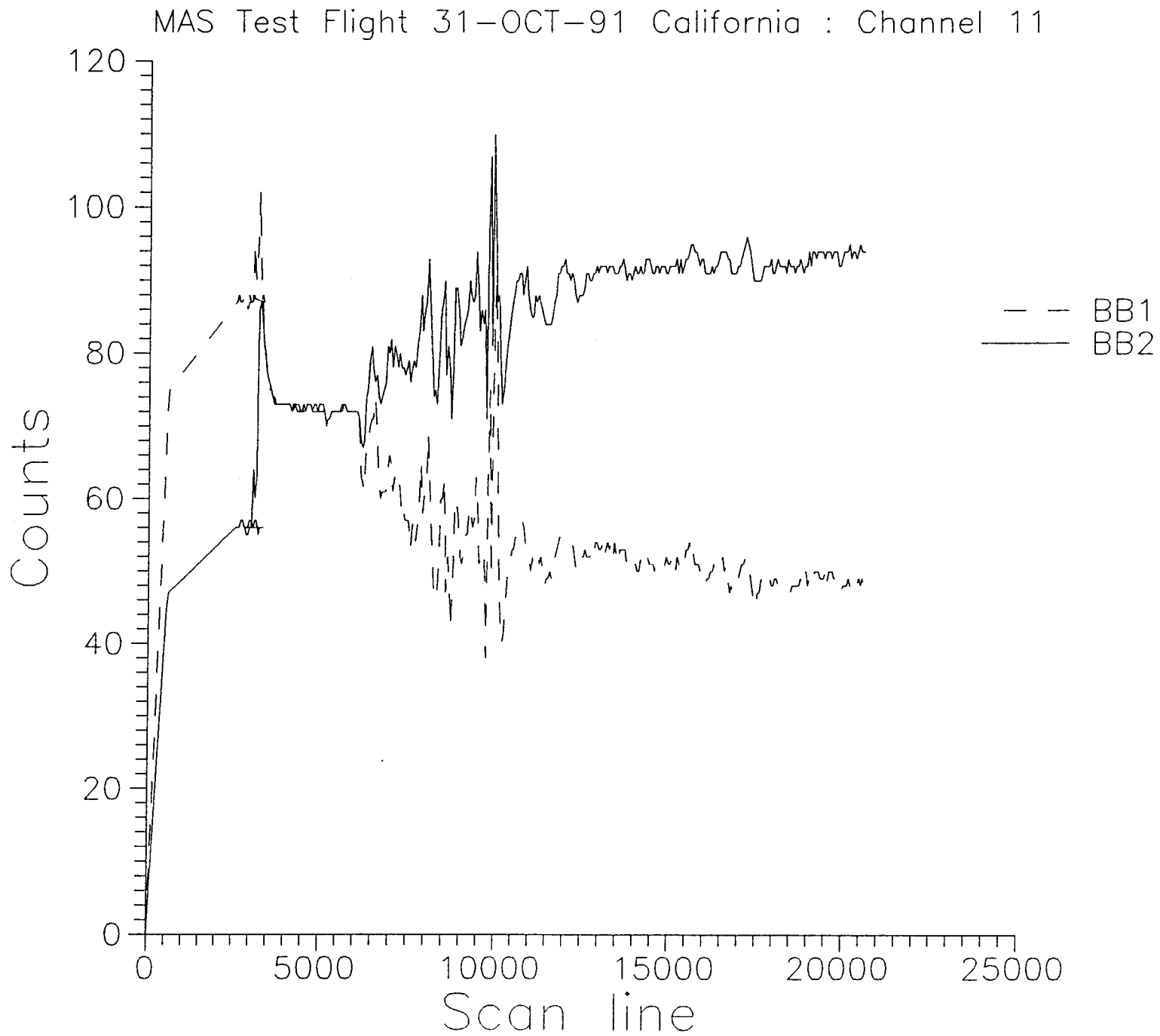
MAS Test Flight 31-OCT-91 California : Channel 11
Counts
Scan line
0
20
40
60
80
100
120
0
5000
10000
15000
20000
25000
BB1
BB2

PRELIMINARY DRAFT

MODIS Science Data Support Team

FY 1992 Work Plan

(Not to be confused with the Project Plan, the Software and Data Management Plan or the Science Computing Facility Plan)

MODIS\PLANS\WORKPLAN
November, 1991

MODIS SDST

PRELIMINARY DRAFT

Table of Contents

1 Introduction 1

2.1 Team Member Algorithm Development Support 1
2.2 SDST Algorithm Development 4
2.2.1 MODIS Image Registration 4
2.2.2 Digital Elevation Model 5
2.3 Simulations of MODIS Instrument Data 5

3 MODIS Science Computing Facility (SCF) 6

4 MODIS Airborne Simulator (MAS) 7

5 MODIS SDST Deliverables 8
5.1 MODIS Science Data Support Team Project Plan . . . 8
5.2 MODIS Software and Data Management Plan 8
5.3 MODIS Science Computing Facility Plan 9
5.4 MAS Level-1B Data 10

APPENDIX A: MODIS DATA SIMULATIONS A-1

PRELIMINARY DRAFT

1 Introduction

The objective of this work plan is to document the support to be provided by the MODIS Science Data Support Team (SDST) during FY 1992. The SDST provides support for the development of the MODIS science data processing system. Software development, validation, porting, integration and operational testing, documentation, maintenance, modification, and configuration management are all included within the scope of support to be provided. The support also includes the identification of issues involved in MODIS image registration and the use of a digital elevation model, development of a MODIS Science Computing Facility (SCF) Plan and a MODIS Software and Data Management Plan, and support for the MODIS Airborne Simulator (MAS).

(In progress)

Figure 1. Context diagram of the MODIS Science Data Support Team.

2 MODIS Software and Data Management

2.1 Team Member Algorithm Development Support

The MODIS Science Team Members will develop their own algorithms for generating special products and some of the core products. Provisions are made in the EOSDIS Core System (ECS) Statement of Work, Section 3.5, for investigator software development support. These algorithms may be developed at the investigators home facility, at the MODIS SCF using a toolkit developed by the ECS contractor, or at the ECS development facility (before the SCF can support development activity). The MODIS SDST will assist the Investigators as necessary in using the SCF and the toolkits, in porting their algorithms to the SCF, and/or in integrating, testing and validating their algorithms on the MODIS SCF prior to delivery to the EOSDIS. A plan will be developed for porting science team members algorithms to the SCF. Guidelines will be written for team members and others generating MODIS processing algorithms to facilitate porting to the SCF.

The ECS contractor will develop Interface Control Documents (ICDs) for the PGS-to-investigator software interface. The MODIS SDST will provide support as necessary for compliance with the ICD recommended coding and documentation standards for software to be tested, operated, and maintained in the PGS production environment. The investigator software responsibilities of the ECS contractor, the MODIS SDST, and the MODIS Team Members are shown in Table 2.1-1. The software is to be designed, coded, tested, and validated by the investigators using toolkits (with support from the SDST as necessary). The software is then made available to the SDST for porting, integration, testing, and validation on the SCF, and for assurance that the software complies with the EOSDIS coding and documentation standards. The SDST then delivers the software to the ECS contractor for integration into the PGS production environment.

Table 2.1-1 Responsibilities for Investigator Software

ITEM	ECS Contractor	MODIS SDST	Team Member
ICD for Investigator software to PGS & SCF	Develops	Complies	Complies
Investigator software implementation standards	Reviews	Assists in compliance	Complies
Investigator software documentation standards	Defines standards for operations manuals and reviews others	Assists in compliance	Complies
Algorithm definition	None	None	Leads
Investigator software design, code, test, and maintenance	None	Supports as necessary	Leads
Investigator software installation and integration with ECS	Leads	Supports	Reviews
Investigator software science verification	None	Assists	Leads
Investigator software operational testing	Plans and executes	Supports	Reviews
Investigator software QA/PA	Reviews and evaluates	Supports	Leads

2.2 SDST Algorithm Development

MODIS Level-1A, Level-1B, and some of the higher level algorithms will be developed, tested, validated and integrated on the SCF by the SDST. Many of the utility algorithms will be handled in the same way.

2.2.1 MODIS Image Registration

A survey will be made to identify the significant questions and issues associated with MODIS image-to-map registration (registering MODIS images to Ground Control Points (GCP)) for more precise earth location. In addition, image-to-image registration will also be considered for the purpose of providing a good basis for examining changes over time in the recorded sensor data. A plan for MODIS image registration will be developed and circulated to the science team for comments and modification.

Efforts to build an automatic image registration system for MODIS will take into account the lessons learned in the extensive work that has already been done with images from Landsat, AVHRR, and other systems. As a first step, discussions have been held with many persons who have experience in image registration from GSFC, JPL, CSC (EOSAT), and EDC. The discussions with EDC relate primarily to experiences with Advanced Very High Resolution Radiometer (AVHRR) image registration over the United States.

The basic plan for MODIS image registration is to provide improved image location information for each scene over land areas. This information will be included in the MODIS Level-1B data product. Several steps are involved in preparing for this task.

<u>Identify promising techniques and algorithms</u>. The Fast Fourier Transform (FFT) was applied successfully to Landsat 1, 2 and 3 images. Precise registration was achieved with edge detection methods on Landsat 4 and 5 data. A method which offers the best possibility of providing a fully automatic process (or nearly so) would be very desirable for use with MODIS images. The adopted technique, or algorithm, must provide for identification and work-around or rejection of problem scenes without human intervention. The algorithm must be suitable for production processing.

Identify tasks involved in selecting a good set of GCPs. This will involve the identification of 100-meter to 500-meter feature types with well defined edges. Existing sets of GCPs will be examined for their suitability in the MODIS application. Dependence on frequency bands, gain, radiance range, seasonal variations, atmospheric conditions, spatial resolution, etc. will influence the usefulness of different types of features. Geographical areas where additional work is needed will be identified.

Test various candidate algorithms using real data (AVHRR, MAS, or simulated MODIS).

Identify the computer resources required to do production image registration.

2.2.2 Digital Elevation Model

The MODIS Science Team is assuming that a global Digital Elevation Model (DEM) will be available for use at launch. It is important to identify the implications for MODIS processing.

It is not necessary to consider earth topography at Level-1A, because the Level-1A data are not earth located. At Level-1B the use of a DEM would have a major impact on the required computer resources for earth location based on the spacecraft position and attitude and instrument pointing. The same is true for image registration/rectification. Use of a DEM is required in order to determine earth locations with the accuracy required by the science team.

The topography is involved in many aspects of the processing of MODIS Level-2 and Level-3 land products.

2.3 Simulations of MODIS Instrument Data

In fulfilling the Team Leader's Execution Phase Statement of Work, three increasingly complete implementations of MODIS at-launch product generation code prototypes will be delivered to EOSDIS, 33, 21, and 9 months prior to the launch of the first MODIS-N copy. Simulated MODIS-N data will be required to support the operational testing and integration of MODIS standard product science algorithms prior to delivery to EOSDIS. Utilization of realistically simulated MODIS data, perhaps in conjunction with consistently simulated ancillary data, will permit tests of all possible paths within the data product algorithms, and will also obtain reliable estimates of the resource requirements of the

algorithms. Prior to delivery, as a part of the SDST integration and testing process, the implemented code and the robustness of the retrieval algorithms (i.e., the capability for exception handling) will be exercised through application of this simulated MODIS-N data. For each pass, the simulated MODIS data will be made incrementally more comprehensive and realistic.

Generation of simulated MODIS-N data for supporting algorithm integration and operational testing is expected to be an iterative, coordinated activity involving MODIS science team members from the land, ocean, atmosphere, and calibration disciplines, support of the MODIS SDST (and MCST), and possibly collaboration with science team members from related instruments (e.g., AIRS/AMSU, CERES, MISR, and ASTER) and coordination with the EOS Modeling Panel.

In such a simulation, the Earth description and the associated geophysical fields (either in situ, remotely sensed, and/or generated by a GCM) can be used to generate spectral radiances, which are then propagated through orbital and instrument models. MODIS instrument errors and other artifacts are introduced into the observations at this point. The simulated data are then applied to the science algorithms within the Team Leader's Science Computing Facility (SCF) to operationally test the algorithms and create simulated data products. The process is iterated as early algorithm prototypes are improved and as new versions of integrated MODIS-N standard product generation software packages are prepared for delivery to EOSDIS. Prior to delivery, as a part of the SDST integration and testing process, the implemented code, the processing capacity of EOSDIS, and even the robustness of the retrieval algorithms (i.e., the capability for exception handling) will be exercised through application of this simulated MODIS-N data. For each pass, the simulated MODIS data will be made incrementally more comprehensive and realistic. See the appendix for more detail.

3 MODIS Science Computing Facility (SCF)

The MODIS Science Computing Facility (SCF) (also known as the MODIS Team Leader Computing Facility (TLCF)) work area involves the identification and documentation of functional, operational and performance requirements, operations concepts, science scenarios and preliminary design for the SCF.

The MODIS SCF must support pre and post launch algorithm development, integration, testing, validation, modification and

evolution. It must also provide computing resources for the MODIS Team Leader and Goddard Team Members, and it will provide support for quality control and test of the MODIS products. Special products for the Team Leader and some of the Goddard team members, will be generated on the SCF.

The SCF computing capacity (CPU power, storage capacity, communications, displays, I/O, etc.) must grow in response to the increasing requirements resulting from scheduled growth and phasing of algorithm development, rehosting, integration, testing, and validation. Increasing capacity will also be needed to support instrument characterization and calibration. The design of the SCF must be responsive to the planned life-cycle evolution of requirements, operating environment, and expected work load.

The requirements will be refined, and the MODIS science scenarios and SCF operations concepts will be developed and used as the basis for the preliminary design.

A UNIX work station will be selected and installed in the Team Leader SCF supporting CASE tools, C++ (or other object oriented language), MAS processing, and development of utilities and Level-1 algorithms.

4 MODIS Airborne Simulator (MAS)

Science data support will be provided for MODIS Airborne Simulator (MAS) experiments. An upgrade to 50 channels will be made on the MAS next year. Processing code (currently at Version 1.x stage) must be upgraded to Version 2.x. We will also continue to modify and update code as required or requested after feedback from the Science Team, King and Menzel.

For field experiments, it is valuable to have someone in the field, (or in close contact with those in the field) to keep tabs on data quality, instrument problems or failures, visible calibration, etc. This is especially important in early test stages. Support may also be required in flight planning; e.g. weather conditions at the site. If ground or in-situ data is taken in conjunction with MAS overflights, we may act as a central distributor.

Registration of MAS imagery may require investigation. Integration of MAS processing into the V0 DAAC must also be

investigated. Imaging capabilities incorporating NetCDF on: VAS, IRIS, PC's, MAC, etc. will be implemented as part of the tools/utilities suite.

5 MODIS SDST Deliverables

5.1 MODIS Science Data Support Team Project Plan

The MODIS Science Data Support Team Project Plan will document the support to be provided by the MODIS (SDST) to the MODIS Science Team Leader and Team Members within the context of the EOS objectives, the MODIS objectives, and within the EOSDIS structure. The Project Plan will address the objectives, related activities, technical plan, management, end items schedules, resources, reviews, and quality assurance as they relate to the MODIS SDST activities.

A strawman was delivered in October, 1991. The draft version will be delivered in March 1992, and the final version will be delivered in July 1992. Revisions will be delivered as required.

5.2 MODIS Software and Data Management Plan

The MODIS Software and Data Management Plan will describe the manner in which the MODIS instrument data will be acquired, calibrated, validated, earth located, processed, archived and distributed to the science users, within the EOSDIS data management structure. The end-to-end data flow from its origin at the MODIS instrument to the science product archival and distribution will be described in the EOSDIS context.

The Plan will further define the nature of the algorithms to be produced, the computer resources and software tools required for algorithm development, data processing, and generation of special products. A configuration management system will be provided for the protection and assurance of operational software and data products.

The collection and management of input data, ancillary data and data from external sources will be described as they relate to the processing and production of MODIS products. The manner in which reference data for ground control points, digital elevation and terrain models, atmospheric models, coastline definitions, etc. will be collected and integrated into the system will be specified.

The Plan will describe the output products to be produced, including standard, quicklook, browse, and special products. The descriptions will include the volume, product level, and format of the output data. The use of IWG approved standard formats will be emphasized.

The software development and validation schedule will be consistent with the EOS Science Software Development Schedule. It will be based upon the three initial software versions required prior to launch:

V1 launch minus 33 months: Test migration from SCF to the EOSDIS, exercise interfaces, and test execution in operational environment.

V2 launch minus 21 months: Correct any problems in V1, complete operator interface, generate all messages.

V3 launch minus 9 months: Software ready for launch. Final integration, test of operations procedures, training of operations staff.

Each delivery will include software, test data, user's guide, operations guide, and software version description.

Consideration will be given to the processing and management of quick look data for field experiments, targets of opportunity and special investigations. A plan will be provided for the generation and delivery of metadata and browse products.

The responsibilities of the MODIS Science Data Support Team will be identified in terms of data product requirements, operational scenarios, algorithm integration and testing, design and implementation of the operational processing system, data product validation, integration of computer resources, and development of documentation during the definition, prelaunch and postlaunch phases.

A "strawman" version of the plan will be delivered in January 1992. The draft version will be delivered in June 1992. A revision will be delivered in June 1993, and the final version will be delivered in June 1994. Software review materials will be delivered annually.

5.3 MODIS Science Computing Facility Plan

The MODIS Science Computing Facility (SCF) Plan will identify and

document the functional, operational and performance requirements, operations concepts, and science scenarios for the SCF.

The MODIS SCF must support pre and post launch algorithm development, integration, testing, validation, modification and evolution. It must also provide computing resources for the MODIS Team Leader and Goddard Team Members, and it will provide support for quality control and test of the MODIS products. Special products for the Team Leader and some of the Goddard team members, will be generated on the SCF. These requirements will be addressed in the SCF Plan.

The SCF computing capacity (CPU power, storage capacity, communications, displays, I/O, etc.) must grow in response to the increasing requirements resulting from scheduled growth and phasing of algorithm development, rehosting, integration, testing, and validation. Increasing capacity will also be needed to support instrument characterization and calibration. The design of the SCF must be responsive to the planned life-cycle evolution of requirements, operating environment, and expected work load. The SCF Plan will be based upon these life-cycle requirements.

The plan will include costs and schedules for the purchase of equipment and software, facilities and services to be provided by others, and the networking requirements.

A "strawman" version of the plan will be delivered in January 1992. The draft version will be delivered in June 1992. The final version will be delivered in June 1994. Revisions will be delivered as needed.

5.4 MAS Level-1B Data

Science data support will be provided for MODIS Airborne Simulator (MAS) experiments. Processing code (currently at Version 1.x stage) will be upgraded to Version 2.x. The code will also be modified and updated on a continuing basis as required or requested after feedback from the Science Team, King and Menzel. Imaging capabilities incorporating NetCDF on: VAS, IRIS, PC's, MAC, etc. will be implemented as part of the tools/utilities suite.

For each flight, the MAS Level-1B data product in NetCDF format will be delivered within five working days from receipt of the complete data set (Level-1A sensor data plus INS data). A

"User's Guide" describing the data and indicating how it is to be read will be provided along with the data.

APPENDIX A: MODIS DATA SIMULATIONS

MODIS Data Product Algorithms

Algorithms developed for the generation of MODIS-N data products will differ from earlier remote sensing algorithms in several fundamental ways. First, the complexity of the computations will increase. Atmospheric corrections will be employed to perform quantitative, rather than qualitative, remote sensing of the Earth's surface. More information will be extracted from the higher spectral and spatial resolutions, made possible in part by improved confidence in the MODIS instruments' calibration and characterization. The increase in complexity, along with the higher sampling rates caused by the greater resolution in space and frequency and increased duty cycle, will drive up the CPU requirements. The move to quantitative remote sensing will necessitate the ingestion of a greatly increased amount of ancillary data, from collocated and coincident measurements from other EOS instruments when possible. Finally, the increase in sophistication of the algorithms will often result in additional data value dependent branching.

Clearly, full tests of MODIS science data product algorithms requires not only simulated MODIS data, but also data or simulated data from many other sources (potentially including other satellite, aircraft, and in situ datasets).

Related EOS Instrument Simulations

As presently advocated by the EOS Payload Panel, MODIS-N instruments are recommended to fly on board sun-synchronous platforms in both the morning (AM descending node) and afternoon (PM ascending node).

Due to reduced cloud cover in the morning, the AM MODIS would offer the greatest ability to image the Earth's surface, thereby providing the primary science capability for the Land discipline. For the associated data reduction, requirements for atmospheric correction of the observed radiances over land will necessitate input moisture (and possibly temperature) profiles, as well as other atmospheric constituents (e.g., aerosols, total ozone, surface pressure). Other instruments recommended for the AM orbit include ASTER, CERES, and MISR, each of which offer substantial synergy with MODIS-N.

Due to the larger solar insolation and cloud amount, the PM MODIS will offer the greatest opportunity to study clouds and radiation (though complemented by the AM orbiter data). Other instruments recommended for the PM cluster include AIRS/AMSU-A/MHS, CERES, and MIMR.

Both the AM and PM orbits offer observing advantages to the ocean discipline for different areas of the Earth (note also SeaWiFS-2 as a free-flyer in the MODIS-N timeframe).

At this time, a number of MODIS-N simulation activities are occurring, as are simulations for EOS instruments closely tied to MODIS-N. At present, these are designed to address specific, science team unique, sets of questions. For example, the CERES science team is beginning to simulate CERES/MODIS/AIRS/AMSU through the joint use of recent historical ERBE/AVHRR/TOVS data from NOAA-9. In addition, the team has been conducting measurement simulations over 6-day periods using EOS-A overflights over a temporally and diurnally varying Earth specified by ISCCP GOES fields to optimize CERES spatial and angular sampling characteristics. In addition, the AIRS science team is evaluating alternative candidate profile retrieval algorithms through the use of line-by-line atmospheric transmittance simulations. In addition, the AIRS team is considering the use of an imbedded mesoscale model inside of a GCM to generate high spatial resolution simulation data sets. The MODIS science team has simulated spatial characteristics of MODIS through application of the instrument MTF to Landsat TM data, coverage and other effects of possibly conflicting land Bidirectional Reflectance Distribution Function (BRDF) model and ocean sunglint avoidance operating modes, and ocean bio-optical algorithm sensitivity to finite accuracy and resolution of ancillary data sets. The team is working towards developing a "math model" to accurately represent both geometry and radiometry in simulating MODIS-N and MODIS-T scenes.

An End-to-End Concept for MODIS System Simulations

A diverse set of variables must be considered in a generalized MODIS-N system simulation. In the atmosphere, the radiative effects of liquid water and ice clouds must be realistically treated, along with tropospheric and stratospheric aerosols, ozone, other trace gases, and the thermodynamic structure. Over the oceans, the sea surface temperature, optically active organic and inorganic oceanic constituents, and sea ice must be described, along with near-surface winds, wave spectra, and sea ice. Over land, the topography, snow and vegetation cover, along

with spectral surface properties must be specified. Finally, the solar and platform positions and viewing geometries must be specified, along with the forward radiative transfer models needed to create incident spectral radiances at the instrument apertures.

As required, the MODIS SDST will support the practical application of a coordinated Earth definition, where the physics must include a radiatively consistent treatment of the effects of each of the proposed core products. The geophysical parameter data requirements will flow from the Earth description (see above).

Tom Goff's Status
for
7 November, 1991

TGoff on GSFC mail, or teg@LTPIRIS2.GSFC.NASA.GOV

* The first version of the C program that creates the MAS data set in NetCDF format on the LTP VAX has been completed. The data content has been verified with both a known validation data set and a sample MAMS data set.

  - This program will be enhanced in the future to include attribute specifications for all variables and band specifiers for each channel that will include center wavelength and band width parameters.

  - The NetCDF data set size is slightly smaller than an equivalent non-formatted data set. The incremental time to transform the data into NetCDF format is approximately 20 minutes for a 2000 line flight track.

* Several utility programs have been written on the VAX. These include programs that synopsize the NetCDF MAS data contents and write flat file data sets of subsampled MAS data for examination as browse examples (on PC's or other). These programs have been ported to the LTP SGI IRIS. The subsampling program can be used to create data files that PV-Wave can ingest.

* A program to convert NetCDF to the native EASI/PACE data format on the SGI IRIS computer has been written. This EASI/PACE program will become a part of the EASI/PACE menu system on the LTP SGI IRIS computer. The program will be validated and exercised next week.

* Further information derived from a conversation with Mike King's programmer:

  - They use the IBM 3081 for radiative transfer models that create data sets that are transferred to an Apple Macintosh computer via FTP. All programming is performed in FORTRAN. The Mac has a 600 MByte disc and they use the SpyGlass imaging package. It is expected that access to the IBM mainframe will be limited in the future.

  - It appears that the Mac would be a more appropriate platform to place any NetCDF to native file format conversion programs. King et al have given permission for access to several Mac computers. These machines do not have a C compiler at present. This is necessary to compile the NetCDF library on the target (Mac) computers. We should develop programs (or port the VAX programs) that read in NetCDF MAS data to the Mac. These programs are preferably written in C, but can be written in FORTRAN if necessary.

* I recommend that a C compiler for the Mac be purchased that can be used to create a Mac version of the NetCDF libraries. This would be used on any Mac that happens to be currently available and removed after the NetCDF library has been created.

* Version 2.0 of the NetCDF library has just been announced for distribution by UCAR. Our current versions will be updated as time allows - after the current flurry of MAS engineering data is processed.

* I held a brief discussion with Angel Li from the University of Miami during his ongoing visit to GSFC. He recommended that topics concerning geolocation be directed to Sue Walsh at U of Miami. We discussed their implementation of the distributed processing of CZCS data. They use a database which contains a dependencies table to determine if a data set is to be processed. There is presently no method of initiating a process automatically for an incomplete input data set. This capability will be added in the future.

MODIS SCIENCE COMPUTING FACILITY PLAN

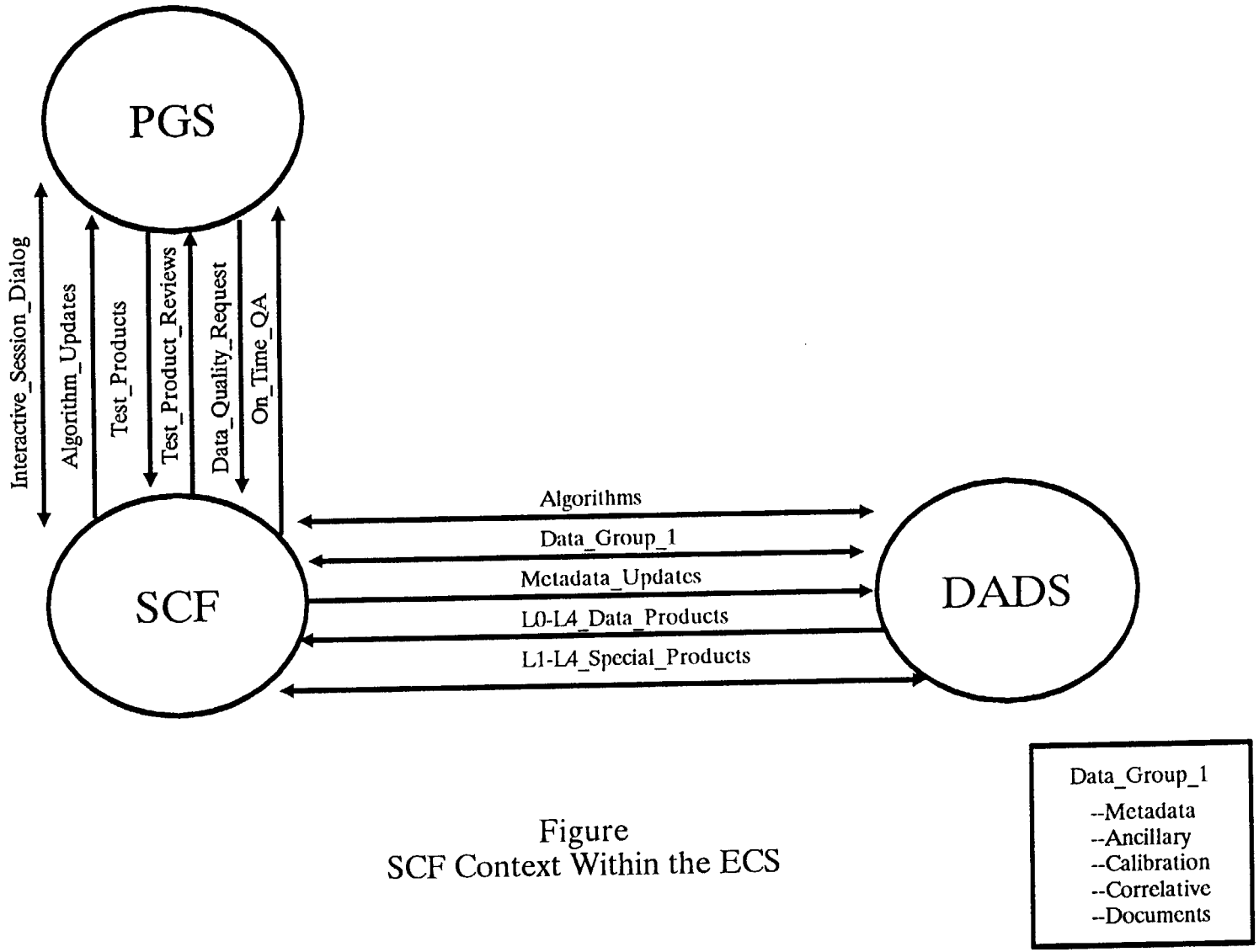

Figure
SCF Context Within the ECS

Data Dictionary for SCF Context

ALGORITHMS consist of the executable programs for science product generation, source code of these executable programs, job control scripts, and algorithm documentation. Algorithms are the result of new or updated science algorithms passing through the integration and test process, involving the scientist and the PGS's algorithm integration and test staff. After formal approval, algorithms are delivered by the PGS to the DADS for storage, and are retrieved as needed to support product production. The DADS shall also archive algorithms contributed as EOSDIS resources by other data centers. Algorithms shall be orderable and distributed to authorized users. Some frequently used algorithms may also be kept on line in the PGS.

ALGORITHM UPDATES are delivered to the PGS's integration and test environment by scientists at an SCF. They represent changes to existing production algorithms, or a new algorithm to produce a new Standard Product. Algorithm updates include the source code for the candidate algorithm, its associated documentation, and a job step control skeleton. The source code will be compiled to form an executable program suite as part of the integration and test process. The job step control skeleton contains instructions that control the sequence of execution of, and the interchange of data between programs from the executable program suite. Test data sets and calibration data should also be included.

PGS-0610 The PGS shall accept from the SCFs new or modified calibration coefficients to be validated in the test environment. Calibration coefficients shall contain the following information at a minimum:

a. Identification of coefficient data set
b. Calibration coefficients values
c. Author and version number
d. Identification of related processing algorithm
e. Start and stop date/time of applicability
f. Documentation (e.g., author, date and time, SCF identification, reasons for update, etc.)

PGS-0640 The PGS shall accept from the SCF new or modified Standard Product algorithms to be tested at the processing facility. This software shall be received into the test environment and shall contain the following information at a minimum:

a. Algorithm identification
b. Algorithm source code
c. List of required inputs
d. Processing dependencies
e. Test data and procedures
f. Algorithm documentation

ANCILLARY DATA refers to any data, other than Standard Products, that are required as input in the generation of a Standard Product. This may include selected engineering data from the EOS platform, ephemeris data, as well as non-EOS ancillary data. All ancillary data is received by the PGS from the DADS.

CALIBRATION is the collection of data required to perform calibration of the instrument science data, instrument engineering data, and the spacecraft or platform engineering data. It includes pre-flight calibration measurements, in-flight calibrator measurements, calibration equation coefficients derived from calibration software routines, and ground truth data that are to be used in the data calibration processing routine.

CORRELATIVE data are scientific data needed to evaluate and validate EOS data products.

DATA QUALITY REQUEST is a request issued by the PGS to a scientist at an SCF to perform QA of a particular product before future processing or distribution. A time window is applied to the request in keeping with the production schedule.

DOCUMENTS are the hardcopy or digitized references or records about an instrument or the products generated from its data. These shall be archived at the DADS.

INTERACTIVE SESSION DIALOG consists of messages that flow between a scientist at an SCF and the PGS that support general communication with the Integration and Test Service. This includes logins, mail messages, etc.

L0-L4 DATA PRODUCTS consist of L0 Data Products from the IPs, the ADCs and ODCs, and L1-L4 Standard Products produced in the PGS.

PGS-1260 The PGS shall send the DADS quick-look products for routing to the appropriate destination (e.g., ICC, SCF).

L1-L4 SPECIAL PRODUCTS are special science data products consisting of L1A, L1B, L2, L3, and L4 which are produced at the SCFs. These shall be archived at the DADS and distributed to authorized requestors.

METADATA is data which describes the content, format, and utility of a Standard Product. It includes standard metadata (i.e., algorithm and calibration numbers, size of product, date created, etc.), algorithm-derived metadata, QA information from the PI's, summary statistics and an audit trail. Metadata is received by each DADS with the corresponding data sets. DADS validates it physically, updates it with inventory information, enters it into a distributed database (to which the IMS has access), and archives it. Metadata about special products produced at SCF shall be sent to DADS along with their associated data products.

METADATA UPDATES are additional or changed items in the metadata for a previously delivered product.

ON TIME QA is a response to a data quality request that is received within the established production time window. It is received from a scientist at an SCF. It consists of data which will be used to complete the QA fields of the metadata. Overdue QA responses are sent directly to the DADS.

PGS-1130 The PGS shall receive product QA from the SCF which shall describe the results of the scientist's product quality review at an SCF. Product QA shall contain the following information at a minimum:

a. Identification of product
b. QA results
c. Product storage and processing instructions

TEST PRODUCTS are science products generated by new or updated algorithms during the integration and test period. Test products are delivered to scientists at an SCF.

PGS-0900 The PGS shall send test products to the SCF for analysis. These shall contain the results of algorithm testing and shall contain the following information at a minimum:

a. Algorithm identification
b. Test time(s)
c. Processor identification
d. Test results

TEST PRODUCT REVIEWS are evaluations of test products that are used to determine how to proceed in the integration and test process for a new or updated algorithm. A review may indicate the need for further algorithm refinement, or it may indicate that a candidate algorithm is ready for formal adoption into the production environment. Test product reviews are received by the PGS from scientists at an SCF.

Excerpts from the ECS Statement of Work
Reflectiong on SCF Functions

2.5.1.2 ECS Release 1

Release 1 shall provide initial PGS functionality and hardware capacity for early stages of science data processing software (algorithm) Integration and Test (I&T), at a site accessible via the ESN by developers. Prior to the delivery of Release 1, a preliminary PGS toolkit shall be designed, reviewed, and delivered to support algorithm development at the SCFs and to facilitate transportability of algorithms to the PGS. Design of the preliminary PGS tool kit shall be coordinated with the overall ECS design.

2.5.1.3 ECS Release 2 and Release 3 (EOSDIS Version 1)

.....

The ECS Release 2 shall provide the PGS functionality and capacity necessary for final I&T of the algorithms (developed and initially tested at the SCFs) in an operational production environment accessible via the ESN by developers. Release 2 shall be capable of accepting NOAA data products necessary for I&T of the algorithms.

3.5 Investigator Software Development Support

EOS investigator software development will be accomplished primarily at the SCFs using a toolkit developed by the ECS Contractor. The Contractor shall assist the Investigators as necessary to understand the ECS interface and use the toolkits. Prior to the availability of PGS facilities at each DAAC, the Contractor shall make its ECS development facility available to support a limited amount of investigator software development and software integration and test, specified by the CO/COTR, after the Contractor-site facility can be so scheduled and before the SCF can support the development activity. The Contractor shall operate this facility, make it available to EOS investigators, and provide for data security as required by the ECS Specification. Although the final sizing of each DAAC will not include algorithm development, provision shall be made to allow use of excess capacity for investigator software development on a non-interference basis and in a controlled and scheduled manner. During production operations, investigator software will be developed and tested at SCFs and integrated and tested at the DAAC(s). The Contractor shall develop ICDs (DID 209/SE1) for the PGS-to-investigator software interface for both the PGS and SCF environments. The ICDs shall include, in addition to complete descriptions of software and operational interfaces, an appendix of recommended coding and

documentation standards for software to be tested, operated, and maintained in the PGS production environment.

List of Functions to be Performed by the MODIS Team Leader SCF
November 8, 1991

Develop and maintain algorithms

Team Leader Services

Level-1A processing algorithms

Level-1B processing algorithms, including calibration

["Utility" algorithms?]

Team Member Science Algorithms (**Analyze and synthesize EOS and other data to expand knowledge about the Earth System and its components**).

Snow and ice products (Vince Salomonson)

Atmospheric products (Mike King and Yoram Kaufman)

MAS processing algorithms

All land team products (?)

Produce data sets

MAS products

Other Team Member Special Products

Validate data

Test products from PGS Test and Integration

Standard Product validation (as specified by the Team Member)

Integrate and test

"Beta" test of ECS software, data formats, standards, and other support for SCFs

MODIS production algorithm integration and test

Manage Team Leader services and functions

Bold typeface indicates direct quote from ECS Specification, Section 3.5, "Science Computing Facilities"

Toolkits and Other ECS-Provided Support
(Derived from the ECS Specification)

7.5.2.1.9 Toolkit Services

.....

The DADS toolkit will provide tools for data format conversion of EOS data, data product subsetting and subsampling, lossy and lossless data compression, and data transformation.

In addition, an ESN toolkit is required for communications and services that will provide compatibility with ESN and ECS. The toolkit for network communications and services will consist of GOSIP/ISO protocols, network management and maintenance, process to process communications, electronic mail/message handling, virtual terminal support, file transfer and management, window managers, directory services, and network security and access control.

PIs and TLs will be able to remotely access the ICC operating their instrument through an ICC toolkit hosted locally. This software toolkit will provide a subset of the capabilities available at the ICC, and will enable the PI/TL to participate in planning and scheduling of instrument operation as well as monitoring the performance of the instrument based on actual instrument engineering data and science quick-look data or other status information provided by the ICC. The PI/TL will also be able to submit command requests to the ICC.

The PGS toolkit will provide scientists with tools needed to simulate the operation of their algorithms in the production environment of the PGS. The toolkit will provide file access, job control, error logging, dynamic storage allocation, and standard mathematical operations such as matrix inversion and fast Fourier transforms.

The SMC toolkit is a set of Computer Aided Software Engineering (CASE) tools which will enable the scientist to develop and maintain his scientific software in a structured, standardized, yet flexible environment. These tools will include the full range of software development and maintenance tools covering all phases of the software development life cycle.

The IMS toolkits will provide data visualization tools, local SCF information management capabilities, and the capability to execute IMS services in a client-server mode. The IMS toolkits will be installed on both the IMS server computers and on the local workstations at the scientist's home facility.

The IMS toolkits will provide the capability to browse subsetted, subsampled and summary data products using the IMS

server computer resources and local workstation resources. When IMS toolkits are installed at local workstations, the workstations will provide a local staging area for data products and will host the data visualization tools.

The IMS toolkits will also provide data base management capabilities at a local SCF to support the ingest and management of information on special products prior to their submission to the ECS. In providing these capabilities to the local sites, standards will be imposed that will facilitate the migration of special products into ECS.

7.5.1.5.1.3 Functional Requirements

....

The Algorithm Integration and Test section also describes, in requirements PGS-0970 to PGS-1025, a set of standard algorithm support routines to be run in the production environment. The PGS is required by PGS-1030 to provide a "toolkit" to the SCF containing corresponding routines. The routines provided to the SCF by the PGS shall provide scientists with tools that they need to simulate the operation of their algorithms in the production environment of the PGS. The routines shall provide file access, job control, error logging, dynamic storage allocation, standard mathematical operations such as matrix inversion and fast Fourier transforms, as well as scientific routines composing a science processing library. The source code for these routines shall be portable, and shall have calling sequences that appear identical to the calling sequences for the corresponding routines running in the PGS processing environment. Differences between the code provided to the SCF and the corresponding code at the PGS may exist, but these differences shall not affect the future integration of the algorithm into the PGS environment. Such differences might include, for example, a performance difference in a mathematical routine, or a difference in the output location for an error message (an error log file instead of an operator's console).

PGS-0970 The PGS shall provide file access subroutines that enforce compliance with the adopted standard ECS formats.

PGS-0980 The PGS shall provide job control routines that provide all required task parameters to the Standard Product software.

PGS-0990 The PGS shall provide error logging subroutines for use by Standard Product software in notifying the system operators of conditions requiring their attention.

PGS-1000 The PGS shall provide error logging subroutines for use by Standard Product software in notifying users of conditions requiring their attention.

PGS-1010 The PGS shall provide mass storage allocation subroutines that provide algorithms with a means for dynamic allocation of storage for temporary files.

PGS-1015 The PGS shall provide ancillary data access subroutines that provide Standard Product software access to ephemeris data (e.g., solar, lunar, and satellite ephemeris), Earth rotation data, and time and position measurement data. These subroutines shall perform operations such as:

a. Interpolation
b. Extrapolation
c. Coordinate system conversion

PGS-1020 The PGS shall provide mathematical libraries including:

a. Linear algebra and analysis (e.g., LINPAC, IMSL)
b. Statistical calculations (e.g., SAS, SPSS)

PGS-1025 The PGS shall provide a science processing library containing routines such as:

a. Image processing routines
b. Data visualization routines
c. Graphics routines

PGS-1030 The PGS shall provide a toolkit to the SCF containing versions of the routines specified in requirements PGS-0970 to PGS-1025.

7.5.2.2 IMS Architecture

Conceptually, the IMS architecture consists of IMS server computers located at each of the DAACs, workstations locally executing the IMS toolkit software, and SCFs executing the Virtual IMS information management software. Workstations, located remote from the IMS servers, at the scientist's home facility execute the IMS toolkit software to provide the user applications discussed above. The workstations are capable of executing the portable IMS toolkit software because of adherence to standards for window systems, graphics, and data base query languages.

A scientist's home computing facility with the Virtual IMS data base management software installed will have the capability to locally manage special product metadata prior to submission to EOSDIS. The Virtual IMS data base management system manages local data at the scientist's home facility.

7.5.2.3.9 Toolkit Services

7.5.2.3.9.1 Toolkit Integration

IMS-1380 The IMS shall provide the capability to integrate the element toolkits with a common user interface.

IMS-1390 The IMS shall distribute toolkit software and documentation to users authorized by the appropriate elements.

7.5.2.3.9.2 Virtual IMS Information Management

IMS-1400 The Virtual IMS Information Management software shall operate with a local data base using a DBMS provided by the SCF which conforms to a set of to be determined standards, thereby facilitating the process of importation of the local data base into the ECS.

IMS-1410 The Virtual IMS Information Management software shall provide metadata management services for local SCF metadata.

IMS-1420 The Virtual IMS Information Management software shall provide the capabilities to search the local SCF data base.

IMS-1430 The Virtual IMS Information Management software shall provide local interactive and batch data management capabilities to:

a. Add
b. Update
c. Delete
d. Retrieve

IMS-1440 The Virtual IMS Information Management software shall provide local SCF data base administration utilities for, at a minimum:

a. Modifying the data base schema
b. Performance monitoring
c. Performance tuning
d. Administration of user access control
e. Data base backup
f. Data base recovery

IMS-1450 The Virtual IMS Information Management tools shall provide the capability to modify the data base structure while adhering to established standards.

IMS-1460 The Virtual IMS Information Management software shall provide the capability to electronically load data base structures and their content.

IMS-1470 The Virtual IMS Information Management software data base management system shall provide, at a minimum, the capability to select data for retrieval by:

a. Boolean operators
b. Relational operators
c. Attribute values
d. Combinations thereof

IMS-1480 The Virtual IMS Information Management software shall allow a user to locate and identify desired data without having detailed knowledge of the system's:

a. Architecture
b. Data base management system
c. Data base structure
d. Query languages
e. Data formats

7.5.2.3.9.3 IMS Toolkit User Application Services

IMS-1490 The IMS toolkit software shall provide users, including those working from ICCs and ISTs, with the capability to locally construct the requests for IMS services, forward the requests to the IMS server, and obtain request results.

IMS-1500 The IMS toolkit software shall provide the tools to support automated generation of metadata, for example, directory, inventory, and catalog of documentation and reference material entries.

IMS-1505 The IMS toolkit software shall provide the tools to simulate an on-line IMS session for training sessions.

7.5.2.3.9.4 Data Visualization

IMS-1510 The IMS data visualization toolkit capabilities shall be portable and execute on user workstations and appropriate ECS facility computers.

IMS-1520 The IMS toolkit software shall provide data visualization tools to assist the investigators to perform the following functions, at a minimum:

a. QA/Validation of products generated by the PGS
b. Algorithm development
c. Calibration functions, parameter verification, and anomaly detection
d. View subsetted, subsampled, and summarized data prior to ordering

IMS-1530 The IMS data visualization toolkit shall provide the capability to visualize data in raster and vector formats and to visualize animated products.

IMS-1540 The IMS toolkit software shall provide the capability to generate, at a minimum:

a. Two-dimensional plots (x-y plots, scatter plots, profiles, histograms)
b. Three-dimensional plots
c. Contour plots
d. Three-dimensional surface diagrams

IMS-1550 The IMS toolkit data visualization tools shall provide capabilities for image manipulation.

IMS-1570 The IMS toolkit software shall provide statistical analysis capabilities.

IMS-1590 The IMS toolkit data visualization tools shall provide capabilities for sizing and positioning the cursor by:

a. Earth coordinates
b. Image coordinates
c. Instrument scan-line coordinated