# MODIS
# SCIENCE DATA SUPPORT TEAM
# PRESENTATION

**November 15, 1991**

## AGENDA

1. Action Items
2. MODIS Airborne Simulator (MAS)
3. MODIS SDST Workplan
4. NetCDF Status
5. MODIS Team Leader Computing Facility Plan

ACTION ITEMS:

08/30/91 [Lloyd Carpenter and Team]: Draft a schedule of work for the next 12 months. Include primary events and milestones, documents to be produced, software development, MAS support, etc. (An updated draft is included in the handout.) STATUS: Open. Due date 09/27/91.

10/04/91 [Phil Ardanuy and Team]: Prepare questions for the project to characterize the spacecraft position and attitude knowledge and the MODIS pointing knowledge in a way that will facilitate the evaluation of methods such as image registration to meet the science team requirements for earth location. (The letter to the project was prepared, 10/28/91.) STATUS: Open. Due date 10/18/91.

10/04/91 [Tom Goff]: Examine and describe the Miami DSP navigation scheme in relation to MODIS navigation. Status: Open. Due date 11/15/91.

11/08/91 [Tom Goff]: Meet with Angel Li (currently at GSFC) again before he leaves GSFC for more information regarding the DSP. Status: Open. Due date 12/06/91.

**MODIS Airborne Simulator: Fire Experiment**

Liam Gumley is on site in Houston, and filed this report.

Liam arrived on Monday night, and the aircraft arrived on Tuesday afternoon.

They took data on the trip from Ames to Houston, and it looks OK.

No data was taken on Wednesday because the investigators and/or instruments for in situ data were not ready. The first flight started at about 7:20 am on Thursday, and returned about 1:00 pm the same day. The data looks good

The noise problem has been improved. A heater in the pod with the MAS instrument was the source of the noise. The problem has been fixed now so that the instrument works properly with the heater on.

The Quick View program is there, and they are using it to look at Thursday's data. Chris Moeller programmed some calibration capability into the Quick View software, so they can look at calibrated radiances. Everything looks good.

There are a total of 15 or 20 people there associated with the 5 different instruments on the aircraft. They will make about 10 flights altogether collecting data with the MAS.

Everything seems to be going well. Liam will be in on Monday.

**DRAFT**

# MODIS Science Data Support Team

# FY 1992 Work Plan

(Not to be confused with the Project Plan, the Software and Data Management Plan or the ~~Science~~ MODIS Team Leader Computing Facility Plan)

MODIS\PLANS\WORKPLAN
November, 1991

MODIS SDST

**DRAFT**

# Table of Contents


1 Introduction . . . . . 1

2 MODIS Software and Data Management . . . . . 1
- 2.1 Team Member Algorithm Development Support . . . . . 1
- 2.2 SDST Algorithm Development . . . . . 4
  - 2.2.1 MODIS Level-1A and Level-1B Algorithms . . . 4
  - 2.2.2 MODIS Image Registration . . . . . 4
  - 2.2.3 Digital Elevation Model . . . . . 5
- 2.3 MODIS Algorithm Guidelines and Standards . . . . . 6
- 2.4 Simulations of MODIS Instrument Data . . . . . 6

3 MODIS ~~Science~~ Team Leader Computing Facility ~~(SCF~~ (TLCF) . . . . . 7

4 MODIS Airborne Simulator (MAS) . . . . . 8

5 Training . . . . . 9

6 Processes and Procedures . . . . . 9

7 MODIS SDST Deliverables, Schedule and Level of Effort . 9
- 7.1 MODIS Science Data Support Team Project Plan . . . 9
- 7.2 MODIS Software and Data Management Plan . . . . . 9
- 7.3 MODIS ~~Science~~ Team Leader Computing Facility Plan 11
- 7.4 MAS Level-1 Data . . . . . 11
- 7.5 Schedule . . . . . 12
- 7.6 Level of Effort . . . . . 12

APPENDIX A: MODIS DATA SIMULATIONS . . . . . A-1

**DRAFT**

# 1 Introduction

The objective of this work plan is to document the support to be provided by the MODIS Science Data Support Team (SDST) during FY 1992. The SDST provides support for the development of the MODIS science data processing system. Software development, validation, porting, integration and operational testing, documentation, maintenance, modification, and configuration management are all included within the scope of support to be provided. The support also includes the identification of issues involved in MODIS image registration and the use of a digital elevation model, development of a MODIS ~~Science~~ Team Leader Computing Facility ~~(SCF~~ (TLCF) Plan and a MODIS Software and Data Management Plan, and support for the MODIS Airborne Simulator (MAS).

| |
|---|
| To be completed |

Figure 1. Context diagram of the MODIS Science Data Support Team.

# 2 MODIS Software and Data Management

## 2.1 Team Member Algorithm Development Support

The MODIS Science Team Members will develop their own algorithms for generating special products and some of the core products. ~~Provisions are made in the EOSDIS Core System (ECS) Statement of Work, Section 3.5, for investigator software development support.~~ These algorithms may be developed at the investigators home facility, or at the MODIS ~~SCF~~ TLCF using a toolkit developed by the ~~ECS contractor~~ MODIS SDST.~~, or at the ECS development facility (before the SCF can support development activity).~~ The MODIS SDST will assist the Investigators as necessary in using the ~~SCF~~ TLCF and the toolkits, in porting their algorithms to the ~~SCF~~ TLCF, and/or in integrating, testing and validating their algorithms on the MODIS ~~SCF~~ TLCF prior to delivery to the EOSDIS. A plan will be developed for porting science team members algorithms to the ~~SCF~~ TLCF. Guidelines to facilitate porting to

the ~~SCF~~ TLCF will be written for team members and others generating MODIS processing algorithms .

The ~~ECS contractor~~ MODIS SDST will also develop Interface Control Documents (ICDs) for the ~~PGS~~ EOSDIS-to-investigator software interface. The MODIS SDST will provide support as necessary for compliance with the ~~ICD~~ recommended coding and documentation standards for software to be tested, operated, and maintained in the PGS production environment. The investigator software responsibilities of the ~~ECS contractor, the~~ MODIS SDST, and the MODIS Team Members are shown in Table 2.1-1. ~~The software is to be designed, coded, tested, and validated by the investigators using toolkits (with support from the SDST as necessary). The software is then made available to the SDST for porting, integration, testing, and validation on the SCF TLCF, and for assurance that the software complies with the EOSDIS coding and documentation standards. The SDST then delivers the software to the ECS contractor for integration into the PGS production environment.~~ (See also Section 2.3).

**DRAFT**

## Table 2.1-1 Responsibilities for Investigator Software

| ITEM | ECS Contractor | MODIS SDST | Team Member |
|---|---|---|---|
| ICD for Investigator software to PGS & ~~SCF~~ TLCF | Develops for PGS | Develops for TLCF, Complies for PGS | Complies for TLCF |
| Investigator software implementation standards | Reviews | ~~Assists in compliance~~ Complies | ~~Complies~~ Aware |
| Investigator software documentation standards | Defines standards for operations manuals and reviews others | Assists in compliance | Complies |
| Algorithm definition | None | None | Leads |
| Investigator software design, code, test, and maintenance | None | Supports as necessary | Leads |
| Investigator software installation and integration with ECS | Review | ~~Supports~~ Leads | Reviews |
| Investigator software science verification | None | Assists | Leads |
| Investigator software operational testing | Plans and executes | Supports, Conducts on TLCF | Reviews |
| Investigator software QA/PA (product assurance) | Reviews and evaluates | Supports | ~~Leads~~ None |

Note: SDST interacts with project on concepts, plans, and requirements.

## 2.2 SDST Algorithm Development

MODIS Level-1A, Level-1B, and some of the higher level algorithms will be developed, tested, validated and integrated on the ~~SCF~~ TLCF by the SDST. Many of the utility algorithms will be handled in the same way.

### 2.2.1 MODIS Level-1A and Level-1B Algorithms

The MODIS Level-1A product has been defined in terms of its contents and reversibility. It has also been decided that the sensor data will not be unpacked. The scan cube has been identified as a meaningful unit of data for some purposes, but the scan cube is too small as a unit for ordering and distributing the data. A suitable data structure for distribution will be determined.

For the MODIS Level-1B product, the data will be calibrated and earth-located. The scan cube is still a meaningful unit of data, but a larger unit is needed for distribution. With calibrated radiances, and with no further reversibility requirement, there is more flexibility in defining the format and structure. An examination of this issue will be coordinated with the science team members to assure that their requirements are met.

The Level-1B design must be refined to provide for ground location information based upon image registration and the use of a digital elevation model (DEM), as discussed in the following sections..

The MODIS Level-1 processing design must be updated as additional information on the MODIS-N data stream becomes available.

### 2.2.2 MODIS Image Registration

A survey will be made to identify the significant questions and issues associated with MODIS image-to-map registration (registering MODIS images to Ground Control Points (GCP)) for more precise earth location. In addition, image-to-image registration will also be considered for the purpose of providing a good basis for examining changes over time in the recorded sensor data. A plan for MODIS image registration will be developed and circulated to the science team for comments and modification.

Efforts to build an automatic image registration system for MODIS

will take into account the lessons learned in the extensive work that has already been done with images from Landsat, AVHRR, and other systems. As a first step, discussions have been held with many persons who have experience in image registration from GSFC, JPL, CSC (EOSAT), and EDC. The discussions with EDC relate primarily to experiences with Advanced Very High Resolution Radiometer (AVHRR) image registration over the United States.

The basic plan for MODIS image registration is to provide improved image location information for each scene over land areas. This information will be included in the MODIS Level-1B data product. Several steps are involved in preparing for this task.

Identify promising techniques and algorithms. The Fast Fourier Transform (FFT) was applied successfully to Landsat 1, 2 and 3 images. Precise registration was achieved with edge detection methods on Landsat 4 and 5 data. A method which offers the best possibility of providing a fully automatic process (or nearly so) would be very desirable for use with MODIS images. The adopted technique, or algorithm, must provide for identification and work-around or rejection of problem scenes without human intervention. The algorithm must be suitable for production processing.

Identify tasks involved in selecting a good set of GCPs. This will involve the identification of 100-meter to 500-meter feature types with well defined edges. Existing sets of GCPs will be examined for their suitability in the MODIS application. Dependence on frequency bands, gain, radiance range, seasonal variations, atmospheric conditions, spatial resolution, etc. will influence the usefulness of different types of features. Geographical areas where additional work is needed will be identified.

Test various candidate algorithms using real data (AVHRR, MAS, or simulated MODIS).

Identify the computer resources required to do production image registration.

### 2.2.3 Digital Elevation Model

The MODIS Science Team is assuming that a global Digital Elevation Model (DEM) will be available for use at launch. It is

important to identify the implications for MODIS processing.

It is not necessary to consider earth topography at Level-1A, because the Level-1A data are not earth located. At Level-1B the use of a DEM would have a major impact on the required computer resources for earth location based on the spacecraft position and attitude and instrument pointing. The same is true for image registration/rectification. Use of a DEM is required in order to determine earth locations with the accuracy required by the science team.

The topography is involved in many aspects of the processing of MODIS Level-2 and Level-3 land products.

### 2.3 MODIS Algorithm Guidelines and Standards

The MODIS SDST will develop guidelines for development and delivery of team members algorithms to facilitate porting to the TLCF. The MODIS SDST will also develop Interface Control Documents (ICDs) for the EOSDIS-to-investigator software interface. The MODIS SDST will provide support as necessary for compliance with the recommended coding and documentation standards for software to be tested, operated, and maintained in the PGS production environment. The software is to be designed, coded, tested, and validated by the investigators following the guidelines provided by the SDST (with support from the SDST as necessary). The software is then made available to the SDST for porting, integration, testing, and validation on the TLCF, and for assurance that the software complies with the EOSDIS coding and documentation standards. The SDST then delivers the software to the EOSDIS for integration into the PGS production environment with assistance from the SDST as needed). (See also Section 2.1.)

### 2.4 Simulations of MODIS Instrument Data

In fulfilling the Team Leader's Execution Phase Statement of Work, three increasingly complete implementations of MODIS at-launch product generation code prototypes will be delivered to EOSDIS, 33, 21, and 9 months prior to the launch of the first MODIS-N copy. Simulated MODIS-N data will be required to support the operational testing and integration of MODIS standard product science algorithms prior to delivery to EOSDIS. Utilization of realistically simulated MODIS data, perhaps in conjunction with consistently simulated ancillary data, will permit tests of all possible paths within the data product algorithms, and will also obtain reliable estimates of the resource requirements of the

algorithms. Prior to delivery, as a part of the SDST integration and testing process, the implemented code and the robustness of the retrieval algorithms (i.e., the capability for exception handling) will be exercised through application of this simulated MODIS-N data. For each pass, the simulated MODIS data will be made incrementally more comprehensive and realistic.

Generation of simulated MODIS-N data for supporting algorithm integration and operational testing is expected to be an iterative, coordinated activity involving MODIS science team members from the land, ocean, atmosphere, and calibration disciplines, support of the MODIS SDST (and MCST), and possibly collaboration with science team members from related instruments (e.g., AIRS/AMSU, CERES, MISR, and ASTER) and coordination with the EOS Modeling Panel.

In such a simulation, the Earth description and the associated geophysical fields (either in situ, remotely sensed, and/or generated by a GCM) can be used to generate spectral radiances, which are then propagated through orbital and instrument models. MODIS instrument errors and other artifacts are introduced into the observations at this point. The simulated data are then applied to the science algorithms within the Team Leader~~'s Science~~ Computing Facility ~~(SCF~~ (TLCF) to operationally test the algorithms and create simulated data products. The process is iterated as early algorithm prototypes are improved and as new versions of integrated MODIS-N standard product generation software packages are prepared for delivery to EOSDIS. Prior to delivery, as a part of the SDST integration and testing process, the implemented code, the processing capacity of EOSDIS, and even the robustness of the retrieval algorithms (i.e., the capability for exception handling) will be exercised through application of this simulated MODIS-N data. For each pass, the simulated MODIS data will be made incrementally more comprehensive and realistic. See the appendix for more detail.

## 3 MODIS ~~Science~~ Team Leader Computing Facility ~~(SCF~~ (TLCF)

The MODIS ~~Science~~ Team Leader Computing Facility ~~(SCF~~ (TLCF) ~~(also known as the MODIS Team Leader Computing Facility (TLCF))~~ work area involves the identification and documentation of functional, operational and performance requirements, operations concepts, science scenarios and preliminary design for the ~~SCF~~ TLCF.

The MODIS ~~SCF~~ TLCF must support pre and post launch algorithm

development, integration, testing, validation, modification and evolution. It must also provide computing resources for the MODIS Team Leader and Goddard Team Members, and it will provide support for quality control and test of the MODIS products. Special products for the Team Leader and some of the Goddard team members, will be generated on the ~~SCF~~ TLCF.

The ~~SCF~~ TLCF computing capacity (CPU power, storage capacity, communications, displays, I/O, etc.) must grow in response to the increasing requirements resulting from scheduled growth and phasing of algorithm development, rehosting, integration, testing, and validation. Increasing capacity will also be needed to support instrument characterization and calibration. The design of the ~~SCF~~ TLCF must be responsive to the planned life-cycle evolution of requirements, operating environment, and expected work load.

The requirements will be refined, and the MODIS science scenarios and ~~SCF~~ TLCF operations concepts will be developed and used as the basis for the preliminary design.

A UNIX work station will be selected and installed in the ~~Team Leader SCF~~ TLCF supporting CASE tools, C++ (or other object oriented language), MAS processing, and development of utilities and Level-1 algorithms.

# 4 MODIS Airborne Simulator (MAS)

Science data support will be provided for MODIS Airborne Simulator (MAS) experiments. An upgrade to 50 channels will be made on the MAS next year. Processing code (currently at Version 1.x stage) must be upgraded to Version 2.x. We will also continue to modify and update code as required or requested after feedback from the Science Team, King and Menzel.

For field experiments, it is valuable to have someone in the field, (or in close contact with those in the field) to keep tabs on data quality, instrument problems or failures, visible calibration, etc. This is especially important in early test stages. Sup~~port~~ ~~may~~ also be required in flight planning; e.g. weather conditions at the site. If ground or in-situ data is taken in conjunction with MAS overflights, we may act as a central distributor.

Registration of MAS imagery may require investigation.

Integration of MAS processing into the V0 DAAC must also be investigated. Imaging capabilities incorporating NetCDF on: VAS, IRIS, PC's, MAC, etc. will be implemented as part of the tools/utilities suite.

# 5 Training

(To be completed)

# 6 Processes and Procedures

(To be completed)

# 7 MODIS SDST Deliverables, Schedule and Level of Effort

## 7.1 MODIS Science Data Support Team Project Plan

The MODIS Science Data Support Team Project Plan will document the support to be provided by the MODIS (SDST) to the MODIS Science Team Leader and Team Members within the context of the EOS objectives, the MODIS objectives, and within the EOSDIS structure. The Project Plan will address the objectives, related activities, technical plan, management, end items schedules, resources, reviews, and quality assurance as they relate to the MODIS SDST activities.

A strawman was delivered in October, 1991. The draft version will be delivered in March 1992, and the final version will be delivered in July 1992. Revisions will be delivered as required.

## 7.2 MODIS Software and Data Management Plan

The MODIS Software and Data Management Plan will describe the manner in which the MODIS instrument data will be acquired, calibrated, validated, earth located, processed, archived and distributed to the science users, within the EOSDIS data management structure. The end-to-end data flow from its origin at the MODIS instrument to the science product archival and distribution will be described in the EOSDIS context.

The Plan will further define the nature of the algorithms to be produced, the computer resources and software tools required for

algorithm development, data processing, and generation of special products. A configuration management system will be provided for the protection and assurance of operational software and data products.

The collection and management of input data, ancillary data and data from external sources will be described as they relate to the processing and production of MODIS products. The manner in which reference data for ground control points, digital elevation and terrain models, atmospheric models, coastline definitions, etc. will be collected and integrated into the system will be specified.

The Plan will describe the output products to be produced, including standard, quicklook, browse, and special products. The descriptions will include the volume, product level, and format of the output data. The use of IWG approved standard formats will be emphasized.

The software development and validation schedule will be consistent with the EOS Science Software Development Schedule. It will be based upon the three initial software versions required prior to launch:

- V1 launch minus 33 months: Test migration from ~~SCF~~ TLCF to the EOSDIS, exercise interfaces, and test execution in operational environment.

- V2 launch minus 21 months: Correct any problems in V1, complete operator interface, generate all messages.

- V3 launch minus 9 months: Software ready for launch. Final integration, test of operations procedures, training of operations staff.

Each delivery will include software, test data, user's guide, operations guide, and software version description.

Consideration will be given to the processing and management of quick look data for field experiments, targets of opportunity and special investigations. A plan will be provided for the generation and delivery of metadata and browse products.

The responsibilities of the MODIS Science Data Support Team will be identified in terms of data product requirements, operational scenarios, algorithm integration and testing, design and implementation of the operational processing system, data product

validation, integration of computer resources, and development of documentation during the definition, prelaunch and postlaunch phases.

A "strawman" version of the plan will be delivered in January 1992. The draft version will be delivered in June 1992. A revision will be delivered in June 1993, and the final version will be delivered in June 1994. Software review materials will be delivered annually.

### 7.3 MODIS ~~Science~~ Team Leader Computing Facility Plan

The MODIS ~~Science~~ Team Leader Computing Facility ~~(SCF~~ (TLCF) Plan will identify and document the functional, operational and performance requirements, operations concepts, and science scenarios for the ~~SCF~~ TLCF.

The MODIS ~~SCF~~ TLCF must support pre and post launch algorithm development, integration, testing, validation, modification and evolution. It must also provide computing resources for the MODIS Team Leader and Goddard Team Members, and it will provide support for quality control and test of the MODIS products. Special products for the Team Leader and some of the Goddard team members, will be generated on the ~~SCF~~ TLCF. These requirements will be addressed in the ~~SCF~~ TLCF Plan.

The ~~SCF~~ TLCF computing capacity (CPU power, storage capacity, communications, displays, I/O, etc.) must grow in response to the increasing requirements resulting from scheduled growth and phasing of algorithm development, rehosting, integration, testing, and validation. Increasing capacity will also be needed to support instrument characterization and calibration. The design of the ~~SCF~~ TLCF must be responsive to the planned life-cycle evolution of requirements, operating environment, and expected work load. The ~~SCF~~ TLCF Plan will be based upon these life-cycle requirements.

The plan will include costs and schedules for the purchase of equipment and software, facilities and services to be provided by others, and the networking requirements.

A "strawman" version of the plan will be delivered in January 1992. The draft version will be delivered in June 1992. The final version will be delivered in June 1994. Revisions will be delivered as needed.

### 7.4 MAS Level-1 Data

Science data support will be provided for MODIS Airborne Simulator (MAS) experiments. Processing code (currently at Version 1.x stage) will be upgraded to Version 2.x. The code will also be modified and updated on a continuing basis as required or requested after feedback from the Science Team, King and Menzel. Imaging capabilities incorporating NetCDF on: VAS, IRIS, PC's, MAC, etc. will be implemented as part of the tools/utilities suite.

For each flight, the MAS Level-1B data product in NetCDF format will be delivered within five working days from receipt of the complete data set (Level-1A0 sensor data plus INS data). A "User's Guide" describing the data and indicating how it is to be read will be provided along with the data.

### 7.5 Schedule

{To be completed}

### 7.6 Level of Effort

{To be completed}

# APPENDIX A: MODIS DATA SIMULATIONS

## MODIS Data Product Algorithms

Algorithms developed for the generation of MODIS-N data products will differ from earlier remote sensing algorithms in several fundamental ways. First, the complexity of the computations will increase. Atmospheric corrections will be employed to perform quantitative, rather than qualitative, remote sensing of the Earth's surface. More information will be extracted from the higher spectral and spatial resolutions, made possible in part by improved confidence in the MODIS instruments' calibration and characterization. The increase in complexity, along with the higher sampling rates caused by the greater resolution in space and frequency and increased duty cycle, will drive up the CPU requirements. The move to quantitative remote sensing will necessitate the ingestion of a greatly increased amount of ancillary data, from collocated and coincident measurements from other EOS instruments when possible. Finally, the increase in sophistication of the algorithms will often result in additional data value dependent branching.

Clearly, full tests of MODIS science data product algorithms requires not only simulated MODIS data, but also data or simulated data from many other sources (potentially including other satellite, aircraft, and in situ datasets).

## Related EOS Instrument Simulations

As presently advocated by the EOS Payload Panel, MODIS-N instruments are recommended to fly on board sun-synchronous platforms in both the morning (AM descending node) and afternoon (PM ascending node).

Due to reduced cloud cover in the morning, the AM MODIS would offer the greatest ability to image the Earth's surface, thereby providing the primary science capability for the Land discipline. For the associated data reduction, requirements for atmospheric correction of the observed radiances over land will necessitate input moisture (and possibly temperature) profiles, as well as other atmospheric constituents (e.g., aerosols, total ozone, surface pressure). Other instruments recommended for the AM orbit include ASTER, CERES, and MISR, each of which offer substantial synergy with MODIS-N.

Due to the larger solar insolation and cloud amount, the PM MODIS will offer the greatest opportunity to study clouds and radiation (though complemented by the AM orbiter data). Other instruments recommended for the PM cluster include AIRS/AMSU-A/MHS, CERES, and MIMR.

Both the AM and PM orbits offer observing advantages to the ocean discipline for different areas of the Earth (note also SeaWiFS-2 as a free-flyer in the MODIS-N timeframe).

At this time, a number of MODIS-N simulation activities are occurring, as are simulations for EOS instruments closely tied to MODIS-N. At present, these are designed to address specific, science team unique, sets of questions. For example, the CERES science team is beginning to simulate CERES/MODIS/AIRS/AMSU through the joint use of recent historical ERBE/AVHRR/TOVS data from NOAA-9. In addition, the team has been conducting measurement simulations over 6-day periods using EOS-A overflights over a temporally and diurnally varying Earth specified by ISCCP GOES fields to optimize CERES spatial and angular sampling characteristics. In addition, the AIRS science team is evaluating alternative candidate profile retrieval algorithms through the use of line-by-line atmospheric transmittance simulations. In addition, the AIRS team is considering the use of an imbedded mesoscale model inside of a GCM to generate high spatial resolution simulation data sets. The MODIS science team has simulated spatial characteristics of MODIS through application of the instrument MTF to Landsat TM data, coverage and other effects of possibly conflicting land Bidirectional Reflectance Distribution Function (BRDF) model and ocean sunglint avoidance operating modes, and ocean bio-optical algorithm sensitivity to finite accuracy and resolution of ancillary data sets. The team is working towards developing a "math model" to accurately represent both geometry and radiometry in simulating MODIS-N and MODIS-T scenes.

**An End-to-End Concept for MODIS System Simulations**

A diverse set of variables must be considered in a generalized MODIS-N system simulation. In the atmosphere, the radiative effects of liquid water and ice clouds must be realistically treated, along with tropospheric and stratospheric aerosols, ozone, other trace gases, and the thermodynamic structure. Over the oceans, the sea surface temperature, optically active organic and inorganic oceanic constituents, and sea ice must be described, along with near-surface winds, wave spectra, and sea ice. Over land, the topography, snow and vegetation cover, along

with spectral surface properties must be specified. Finally, the solar and platform positions and viewing geometries must be specified, along with the forward radiative transfer models needed to create incident spectral radiances at the instrument apertures.

As required, the MODIS SDST will support the practical application of a coordinated Earth definition, where the physics must include a radiatively consistent treatment of the effects of each of the proposed core products. The geophysical parameter data requirements will flow from the Earth description (see above).

Tom Goff's Status
for
14 November, 1991

TGoff on GSFC mail, or teg@LTPIRIS2.GSFC.NASA.GOV

* The MAS engineering flight Level-1A data has been placed on the LTP VAX cluster. Three straight line flight track segments have been delineated. The MAS Level-1B program was able to produce two data sets before running out of disk space. These are 94 MByte and 330 MBytes in length. The first line segment has been converted to NetCDF format and resides on the LTP IRIS disk. The second segment conversion to NetCDF format was terminated after 24 hours of processing when the VAX cluster was shut down to perform Air Conditioning service. Our current disk quota on the VAX is 400 MByte, which will contain only the largest MAS Level-1B flight segment data set in NetCDF format. This segment is much larger than expected and is not expected to be this large (hopefully) in normal science flights. A request has been issued by the snow/ice investigators for the instrument to be turned on during the ferry flight from Ames to Houston which may product a large data set. Note that data sets can be broken into smaller segments. This may be desirable from a geolocation algorithm basis also.

  The first flight segment was converted from NetCDF format to the EASI/PACE image database format on the LTP IRIS. This flight segment has 9411 scan lines of data. The first three channels were examined with the following problems noted:

  > Channel 1 contains random noise. The System Sensitivity Performance from Daedalus (included in the 8 Nov 1991 SDST handout) indicates no data for channel 1.
  >
  > Channels 2 and 3 are spatially offset in the data base. This was due to a misinterpretation of the EASI/PACE database requirements and has been corrected in the NetDCF2PCI conversion program, but not verified yet.
  >
  > The snow signature for channels 2 and 3 appear to be inconsistent with the specified wavelengths. This is being investigated further.

  A data check word will be added to the Level-1B data records to be used as a sanity check to insure that data buffers are passed properly from the MAS Level-1B to the NetCDF generation processes.

* A "C" compiler for the Mac has been purchased that will be used to create a Mac version of the NetCDF libraries. This will be used on any Mac that happens to be currently available and removed after the NetCDF library has been created. The NetCDF library can then be ported, without royalty, to all interested Macintosh users. This effort involves the transportation of files from UNIX or VAX machines to Mac's using FTP, UNIX compression (Lempel-Ziv) on the Mac, and the UNIX TAR facility on the Mac.

* Version 2.0 of the NetCDF library has just been announced for distribution by UCAR. Our current versions will be updated as time allows - after the current flurry of MAS engineering and FIRE experiment data is processed.

Comments on the
University of **Miami DSP** imaging software package
as applicable to future MODIS navigation.
Thomas E. Goff
14 November, 1991

Background: It is useful to discuss satellite navigation by defining three spatial domains: **Instrument Scan Geometry** - the across track and along track coordinate system, **Imaging System Position** - the horizontal pixel number and vertical line number as seen on a CRT (or other) display device, and a **Mapped Domain** - represented by the Latitude and Longitude of any point in an image. A transformation among any of these domains may be as simple as a one-to-one viewing of the instrument scan data on a CRT, to a subsampled scan image on a CRT, to a fully mapped image in a map projection. These transformations should be fully invertible.

The U of Miami DSP system uses a simple transformation from the instrument scan position to the imaging system, possibly subsampled. An outline of the land water boundary is then applied as a graphics overlay to the image on a CRT. A human interpreter next moves the continental outline to best fit the visible data. The geographic boundary is transformed using satellite ephemeris information and instrument scan geometry from a Lat-Long database to the imaging system position coordinates. This coastal boundary is then translated and rotated in the image system coordinate system until a best fit is visually obtained. The satellite ephemeris information obtained from the original data source is subsequently modified to represent this updated ephemeris information via the inverse transformation from image system position to the instrument scan geometry.

After correction of the satellite ephemeris, the data are transformed from the instrument scan geometry to a mapping projection. The system is advertised as having 25 map projections, a list of which is to be investigated in the future. Also to be determined are the techniques and limitations of the mapping program (REMAP).

Co-registration of multiple images is determined visually in a mapped image, but not performed in a mapped image. Spatial data can only be corrected in the instrument scan geometry coordinate system.

Summary: DSP updates satellite ephemeris by human intervention on a CRT using coastal boundaries in the instrument scan geometry coordinate system. It does not navigate in a mapping coordinate system.

# MODIS TEAM LEADER COMPUTING FACILITY PLAN

## Near-Term MODIS SDST Activities

Data system issues affecting MODIS Science Team members in the early stages of algorithm development include:

1. Data transport across disparate platforms. Media incompatibilities can limit magnetic tape and other types of data exchange.

2. Data format incompatibilities between various Earth observation programs. Format conversion may be required before external data can be accessed at an SCF. Formats suitable for EOS products must be defined; EOS data products must be written in EOS-compatible formats.

3. Definition and use of utility algorithms. Science Team members may provide software modules from their individual product code for use as utility algorithms by any Science Team member preforming a similar function. The SDST may provide utilities addressing certain common data system requirements affecting many Science Team members. Utility algorithms are needed early in the program as new code is being prepared.

4. Software transport across disparate platforms. Besides the obvious need to move software from the SCF to production facilities, support software to be used by many or all Science Team members must operate on all platforms used by the Science Team. The SDST will need to port utility algorithms provided by one Science Team member to alternative platforms used by other team members.

These issues affect the very earliest Team Member efforts and assistance on these issues is needed as soon as possible in the program. The MODIS SDST is already processing MODIS Airborne Simulator (MAS) data and can serve as a testbed for the early identification and resolution of the data system issues such as those listed above.

The SDST will continue MAS processing and begin utility algorithm development early in the program. These two activities will provide an experience base for resolving the listed issues in a timely manner and for further defining SDST activities. Early plans for the MODIS TLCF will emphasize MAS processing and utility algorithm development.

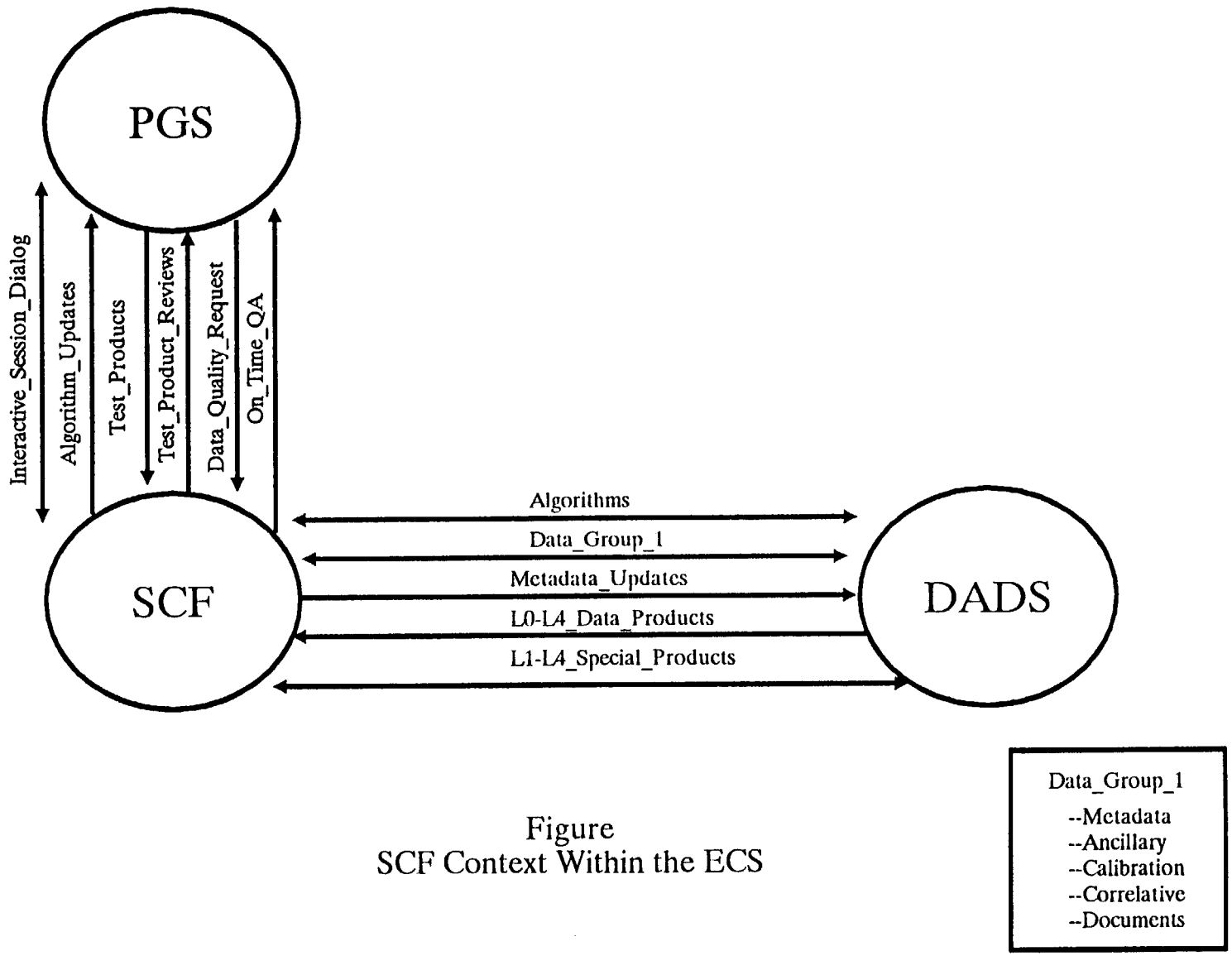


Figure
SCF Context Within the ECS

Data Dictionary for SCF Context

ALGORITHMS consist of the executable programs for science product generation, source code of these executable programs, job control scripts, and algorithm documentation. Algorithms are the result of new or updated science algorithms passing through the integration and test process, involving the scientist and the PGS's algorithm integration and test staff. After formal approval, algorithms are delivered by the PGS to the DADS for storage, and are retrieved as needed to support product production. The DADS shall also archive algorithms contributed as EOSDIS resources by other data centers. Algorithms shall be orderable and distributed to authorized users. Some frequently used algorithms may also be kept on line in the PGS.

ALGORITHM UPDATES are delivered to the PGS's integration and test environment by scientists at an SCF. They represent changes to existing production algorithms, or a new algorithm to produce a new Standard Product. Algorithm updates include the source code for the candidate algorithm, its associated documentation, and a job step control skeleton. The source code will be compiled to form an executable program suite as part of the integration and test process. The job step control skeleton contains instructions that control the sequence of execution of, and the interchange of data between programs from the executable program suite. Test data sets and calibration data should also be included.

PGS-0610 The PGS shall accept from the SCFs new or modified calibration coefficients to be validated in the test environment. Calibration coefficients shall contain the following information at a minimum:

a. Identification of coefficient data set
b. Calibration coefficients values
c. Author and version number
d. Identification of related processing algorithm
e. Start and stop date/time of applicability
f. Documentation (e.g., author, date and time, SCF identification, reasons for update, etc.)

PGS-0640 The PGS shall accept from the SCF new or modified Standard Product algorithms to be tested at the processing facility. This software shall be received into the test environment and shall contain the following information at a minimum:

a. Algorithm identification
b. Algorithm source code
c. List of required inputs
d. Processing dependencies
e. Test data and procedures
f. Algorithm documentation

ANCILLARY DATA refers to any data, other than Standard Products, that are required as input in the generation of a Standard Product. This may include selected engineering data from the EOS platform, ephemeris data, as well as non-EOS ancillary data. All ancillary data is received by the PGS from the DADS.

CALIBRATION is the collection of data required to perform calibration of the instrument science data, instrument engineering data, and the spacecraft or platform engineering data. It includes pre-flight calibration measurements, in-flight calibrator measurements, calibration equation coefficients derived from calibration software routines, and ground truth data that are to be used in the data calibration processing routine.

CORRELATIVE data are scientific data needed to evaluate and validate EOS data products.

DATA QUALITY REQUEST is a request issued by the PGS to a scientist at an SCF to perform QA of a particular product before future processing or distribution. A time window is applied to the request in keeping with the production schedule.

DOCUMENTS are the hardcopy or digitized references or records about an instrument or the products generated from its data. These shall be archived at the DADS.

INTERACTIVE SESSION DIALOG consists of messages that flow between a scientist at an SCF and the PGS that support general communication with the Integration and Test Service. This includes logins, mail messages, etc.

L0-L4 DATA PRODUCTS consist of L0 Data Products from the IPs, the ADCs and ODCs, and L1-L4 Standard Products produced in the PGS.

PGS-1260 The PGS shall send the DADS quick-look products for routing to the appropriate destination (e.g., ICC, SCF).

L1-L4 SPECIAL PRODUCTS are special science data products consisting of L1A, L1B, L2, L3, and L4 which are produced at the SCFs. These shall be archived at the DADS and distributed to authorized requestors.

METADATA is data which describes the content, format, and utility of a Standard Product. It includes standard metadata (i.e., algorithm and calibration numbers, size of product, date created, etc.), algorithm-derived metadata, QA information from the PI's, summary statistics and an audit trail. Metadata is received by each DADS with the corresponding data sets. DADS validates it physically, updates it with inventory information, enters it into a distributed database (to which the IMS has access), and archives it. Metadata about special products produced at SCF shall be sent to DADS along with their associated data products.

METADATA UPDATES are additional or changed items in the metadata for a previously delivered product.

ON TIME QA is a response to a data quality request that is received within the established production time window. It is received from a scientist at an SCF. It consists of data which will be used to complete the QA fields of the metadata. Overdue QA responses are sent directly to the DADS.

PGS-1130 The PGS shall receive product QA from the SCF which shall describe the results of the scientist's product quality review at an SCF. Product QA shall contain the following information at a minimum:

a. Identification of product
b. QA results
c. Product storage and processing instructions

TEST PRODUCTS are science products generated by new or updated algorithms during the integration and test period. Test products are delivered to scientists at an SCF.

PGS-0900 The PGS shall send test products to the SCF for analysis. These shall contain the results of algorithm testing and shall contain the following information at a minimum:

a. Algorithm identification
b. Test time(s)
c. Processor identification
d. Test results

TEST PRODUCT REVIEWS are evaluations of test products that are used to determine how to proceed in the integration and test process for a new or updated algorithm. A review may indicate the need for further algorithm refinement, or it may indicate that a candidate algorithm is ready for formal adoption into the production environment. Test product reviews are received by the PGS from scientists at an SCF.

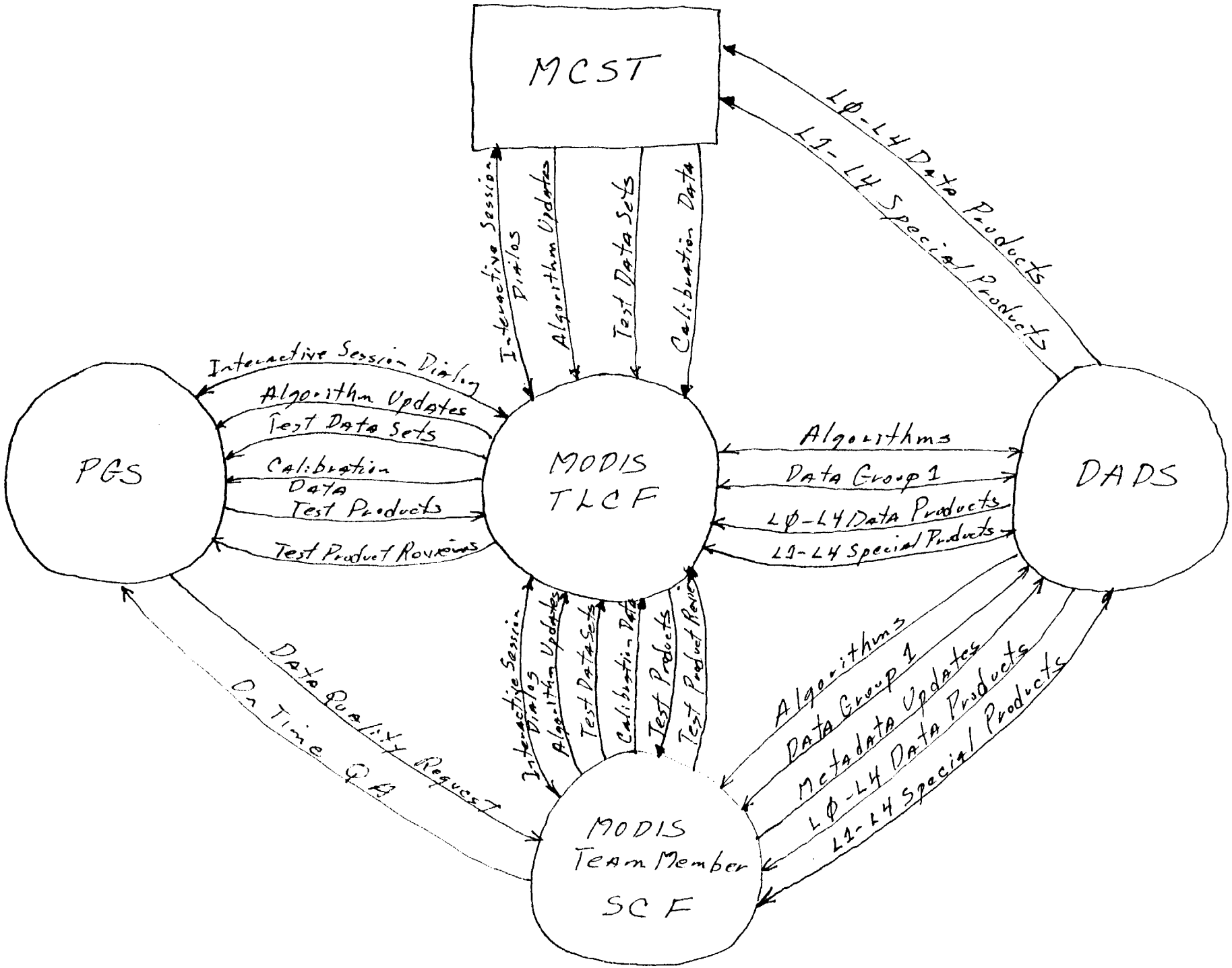
MCST
L0-L4 Data Products
L1-L4 Special Products
Interactive Session Dialogs
Algorithm Updates
Test Data Sets
Calibration Data
PGS
Interactive Session Dialog
Algorithm Updates
Test Data Sets
Calibration Data
Test Products
Test Product Reviews
MODIS TLCF
Algorithms
Data Group 1
L0-L4 Data Products
L1-L4 Special Products
DADS
Interactive Session Dialogs
Algorithm Updates
Test Data Sets
Calibration Data
Test Products
Test Product Reviews
Data Quality Request
On Time QA
Algorithms
Data Group 1
Metadata Updates
L0-L4 Data Products
L1-L4 Special Products
MODIS Team Member SCF