LIST OF ATTACHMENTS

1. Agenda	Wayne Esaias
2. Mission to Planet Earth Program Perspective	Nancy Maynard
3. OCTS — A Perspective	Hajime Fukushima
4. Outline of the Calibration/Validation for OCTS	Hajime Fukushima
5. OCTS Calibration and Validation: On Orbit Calibration Scheme	Masanobu Shimada
6. Current Status of Global Imager (GLI)	Masanobu Shimada
7. GLI: Science Goals and Sensor Team Activities	Hajime Fukushima
8. POLDER	Anne Lifermann
9. MERIS Mission Goals	Giancarlo Pitella & Roland Doerffer
10. Spaceborne Imaging Spectrometers for Ocean Color Remote Sensing: MOS-PRIRODA & MOS-IRS	Andreas Neumann
11. Request for Proposals for Ocean Color Imager (OCI)	Greg Mitchell
12. HSI Requirements Summary	Greg Mitchell
13. Midcourse Space Experiment: Introduction to the Spacecraft, Instruments, and Scientific Objectives	Steve Ackelson
14. Ultraviolet and Visible Imaging and Spectrographic Imaging Instrument	Steve Ackelson
15. Status of International Agreements	Stan Humphries
16. EOSDIS and Ocean Color Data Exchange	Martha Maiden
17. C.E.O.S: Committee on Earth Observation Satellites	Ichtiaque Rasool
18. International Programs	Otis Brown
19. EOS Mission Objectives	Michael King
20. Ocean Biology Program	Robert Frouin
21. NOAA Ocean Color Project	John Malay
22. Recommendations on Intercalibration of Ocean Color Sensors	Chuck McClain
23. Global Geophysical Product Validation	Wayne Esaias & Frank Muller-Karger
24. Product Comparisons and Merging Data	Janet Campbell & Watson Gregg
25. Data and Data System Requirements for Multisensor Data	Gene Feldman & Al Fleig
26. National and International Collaboration for Higher Quality, Long-Term, Global Ocean Color Products	Robert Frouin

Multisensor Ocean Color Workshop

RSMAS, University of Miami Feb. 22-24, 1995
Sheraton Biscayne Bay

Arrangements are proceeding for the workshop, although there was a delay in finalizing the agreement with the meeting contractor. Please call the Hotel for reservations (305-373-6000) and IDENTIFY yourself with the Jorge Scientific /NASA meeting. Reimbursement for travel for US academic (non government, non commercial) attendees will be through Jorge Scientific for those who need it. Kelly Whetzel at Jorge will contact you for information (whetzel@lptmail.gsfc.nasa.gov, or 301-220-1701. They can also make airline reservations. Others are on their own.

The meeting has been planned to take place at RSMAS, with the opening in the RSMAS auditorium. We will let you know if there are any changes.

Goal: To develop a plan and approach, with justification and costs, for coordinated cross-calibration and validation, and data system requirements necessary for combined use of satellite ocean color products from SeaWiFS, MODIS, OCTS, GLI, MERIS, POLDER, and other ocean color sensors, to address needs for decadal scale observations within the NASA Mission to Planet Earth and international Global Change framework.

Objective: Produce a document in draft form by April 15, 1995, and a final report by June 15, 1995, for NASA MTPE, which addresses:

1. Scientific and Agency Needs and Objectives.
2. Radiometric Calibration Requirements. and Approach
3. Global Geophysical Product Algorithm Validation.
4. Multisensor Data Comparison & Merging Procedures.
5. Data and Data System Requirements for Multisensor Data.
6. International and National Coordination.
7. Five year budget.

Preliminary AGENDA

The first plenary session will review status of the various mission specific data and validation plans and funding agency plans and objectives. The short talks should address the current status, especially with respect to the topics above. Speakers should provide written material before the meeting if at all possible. A suggested outline follows.

Wednesday February 22, 1995. RSMAS Auditorium

0800	Registration Auditorium	
0830	Welcome, Goals, Objectives	HQ
0900	SeaWiFS Summary	McClain
0930	MODIS Summary	Esaias et. al.

1000	Japan - OCTS/GLI Summary	Fukushima/Shimada
1030	Break	
1045	ESA/MERIS Summary	Rast/TBD
1115	POLDER Summary	Lifermann/Breon
1145	MOS Summary	Neumann
1200	Discussion - Commonality of approaches	
1215	Lunch	
1315	US Agency Plans, Objectives	
1310	NASA	Humphries/Maiden
1325	EOS	Michael King
1340	ONR and NAVY	Ackelson/Davis
1355	NOAA	Jon Malay
1410	DOE	Paul Falkowski
1425	USGS	Richard Stumpf
1440	US, International JGOFS & IGBP	Rasool/Yoder
1500	Break	
1530	Open Discussion related to present plans	
	Identification of key topics for report	
	Working Group assignments	
1800	Adjourn	

Thursday 23 February

0830	Groups 1 ,2, 5
1030	Break
1045	Groups 1 ,2, 5
1200	Lunches
1330	Groups 1, 2, 3, 4,
1500	Break
1330	Groups 1, 2, 3, 4,
1730	Adjourn

Friday 24 February

0830	Summary Session
	Reports from Groups
1030	Break
1100	Open discussion
1200	Lunch
1300	Budget realities

Groups, and topics to be addressed. These are intended to be food for thought. A proper combination of philosophy and real nuts and bolts is required. If plans go well, within a year there should be three sensors returning data, and within 4 years there could be 3 more. A realistic work plan is needed.

1) Radiometric calibration and characterization of sensors. Chuck McClain and Jim Mueller including both satellite sensors and instruments needed for vicarious calibration and algorithm validation. Instrument and artifact round-robins, buoy instruments. On orbit calibration/stability approaches, comparison of calibrations. Assess instrument approaches, identify needs for multisensor approaches, develop schedule and costs.

2) Global geophysical product validation. Frank Mueller-Karger and Wayne Esaias. Atmospheric correction, atmospheric properties, water leaving radiance/reflectance, bio-optical properties including chlorophyll and DOM, and primary productivity. Where are at-sea activities planned. Is spatial and temporal coverage of planned activities adequate, or where should priorities lie? Can a global systematic approach be developed which can address continuity concerns. Consider buoy arrays, time series stations, protocols. How are algorithms likely to change. What schedules can be developed to address known deficiencies. Emphasis is on individual sensor/mission products. Ship availability and scheduling concerns. [Balance/need for lots of cheap numbers vice fewer, pedigreed numbers]

3) (Global) multisensor product comparisons and merging data. Janet Campbell and Watson Gregg. What is the overlap among standard products and algorithms. How can differences in standard algorithms be resolved? Procedures for forming merged, multisensor, data sets considering differences in algorithms, accuracy, bands, SNR, spatial and temporal resolution, time of day, and availability. What are the planned algorithms, products, errors, and expected product differences between the non-NASA missions and SeaWiFS/MODIS. Is there a model for how data should be assimilated. How do these results feed back into better algorithms, and understanding of ocean and earth system science. Are data policies consistent with science needs.

4) Data system requirements. Gene Feldman and Ed Masuoka. Include ingest, processing, and archive considerations, for multi-sensor regional and global science perspectives (both satellite and in-situ observations). What are the roles of centralized, distributed, national, sensor team, and investigator level efforts. How do you plan to access foreign and field program data. Estimates of volumes of various processing levels for satellite data are needed. Format conversions and archive requirements need to be addressed. What software from various missions will be available, and what is required to port it to other systems.

5) National and International coordination. Robert Frouin and Ichtiaque Rasool. Summarize interactions with major national (such as LMER, LTER) and international field programs (such as JGOFS, LOICZ, ARM) and coordination between various US federal agencies) What interactions should be expected from GOOS, and NDBO? What do various programs (US and international) need from each other to augment validation and data use. Need to account for what NASA has to do in prioritizing resources. Ship and a/c time is but one area

of interaction, science utilization and assessment is another. How should assets be applied - would a national regional focus, or a national parameter focus be beneficial? Is there need for an international steering committee for satellite ocean imagery? Are there adequate mechanisms for joint international proposals? Are international data use and data exchange agreements adequate, or how can they be improved?

Budget - NASA cost estimates are needed at the sub element (group) level, for a five year period.

Suggested topics for mission briefings

15 minutes for:
Goals and objectives
Platform & sensor description, orbit, duty cycles, bands, etc.
Planned sensor characterization studies, on-orbit operations
Data characteristics, coverage, products, levels, grids, formats, media
Sensor data policy, use restrictions, redistribution policy.
Data source(s), interfaces, media, software tools.

15 minutes for :
Product (Algorithm) validation and calibration plan.
What vicarious and in-situ programs are tied into them.
    Who - what - where - when
What protocols are being used
What are potential joint activities
What are you counting on from other agencies to help your mission?
Status of in-situ data archives and data bases.

MTPE Science Priorities 1995

Must be good science but also provide relevant data which impact economies and quality of life

- Scientific Merit
- Programmatic Merit
- Public Policy Implications

MTPE Science Priorities
1995

Global Change "Signals"
only a hand-full known

- CO_2
- Ozone (stratospheric)
- Methane

NASA has Global Observing
Capability (tools)

Therefore, we should move
agressively to increase
understanding

Kennel letter

"It will be important to develop a costed plan for the intercalibration and validation of data from

SeaWiFs, MODIS, MERIS, OCTS
et al

In the 1998-2000 timeframe"

"We will then be able to make a final determination of how to provide ocean color in the future with

- the costed plan
- the SEAWIFS Data Ass't
- A description of alternate flight option (incl. cost)"

Changes in Context

1) Earth System Science → Climate Chang

2) Political Drivers
   - Biodiversity
   - Terrestrial Ecosystems
   - Ecosystem Vulnerability
   - Social Science + Env't

3) Budget Reductions - all Gov't
   - Deficit Red'n
   - NASA
     - Rescope
     - Rebaseline
     - > Reductions

4) Smaller, Faster, Cheaper ("New Millenium

5) "Relevance" of Science Results

6) "Partnering"
   - Interagency
   - International

7) The customer

MTPE RESEARCH IMPACTS THE NATION'S ECONOMY AND QUALITY OF LIFE

CURRENT CAPABILITY

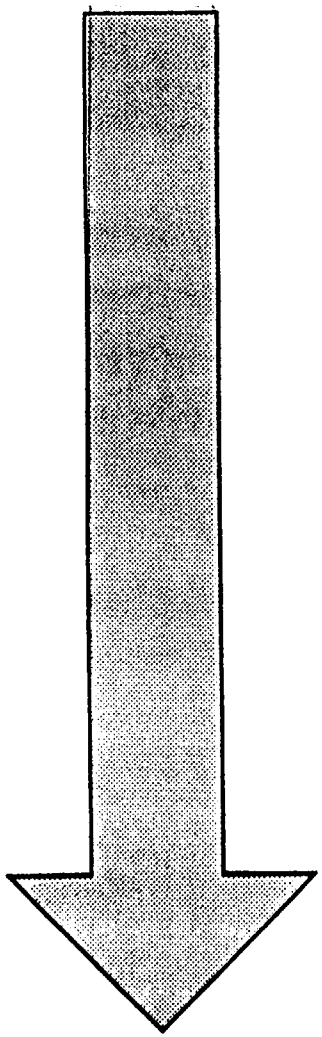

FUTURE CAPABILITY

OZONE DEPLETION

EL NIÑO

SEA LEVEL RISE

DEFORESTATION/BIODIVERSITY

FLOOD/PRECIPITATION PREDICTION

HAZARDS FORECASTING

IMPACT ON HUMANS

MTPE Goals

- **Goal 1**: Increase scientific understanding of the Earth as an integrated environmental system and its vulnerability to natural variations and anthropogenic influences.
- **Goal 2**: Observe and characterize the entire Earth system and make resultant data widely available.
- **Goal 3**: Contribute to wise and timely national and internation environmental policy.
- **Goal 4**: Foster the development of an informed and environmentally aware public
- **Goal 5**: Improve scientific return on investment and enhance U.S. industrial competitiveness by using advance, cost-effective engineering and scientific techniques haveing potential for mutiple uses.
- **Goal 6**: Ensure availability of human and physical resources necessary to achieve the MTPE mission over the long term.

UNCERTAINTY ABOUT EARTH: PRESENT AND FUTURE

- We are already detecting environmental change on a global scale
- Our understanding of most interactions between the parts (air, land, water, life) of the climate system is inadequate
- We do not know how global climate change selectively affects regions and nations
- We can pinpoint factors altering future global climate changes
  - World population increase by 50% in next 25 years
  - World economy will at least double
  - Much of the economic growth will be outside U.S.
  - One third of Earth's surface is already under cultivation
- A clear understanding is required before deciding the need for, and extent of, any corrective actions

NASA's Mission to Planet Earth

- Human society is increasingly vulnerable to environmental change
- We are altering the Earth on a global scale
- We are uncertain how these changes will affect the Earth
- NASA's unique contribution is the global view from space
- Pursuing this knowledge gives America a strategic advantage
- There has been good progress - with much more to come

MTPE RESEARCH IMPACTS THE NATION'S ECONOMY AND QUALITY OF LIFE

CURRENT CAPABILITY

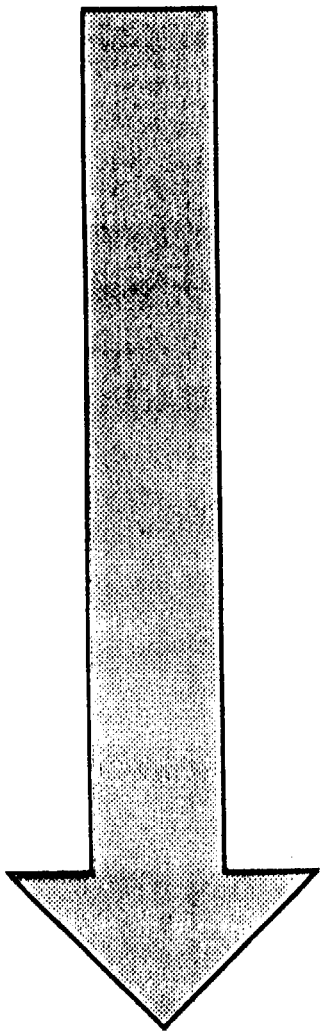

FUTURE CAPABILITY

OZONE DEPLETION

EL NIÑO

SEA LEVEL RISE

DEFORESTATION/BIODIVERSITY

FLOOD/PRECIPITATION PREDICTION

HAZARDS FORECASTING

IMPACT ON HUMANS

Ocean Color - Strategies

1. This Workshop → Plan + Approach for coord cross-calibration + validation + data system reqts - oc. color sensors

2. Ocean Color Science Team

3. NASA → Dev. overall oc. color program
   - organize
   - program, project, community

4. Interagency Working Group - Oc. Biol.

5. Data + Info Issues for all sensors

6. International coord'n plan

7. Ocean Biology → Relevance
   Accomplishments

MTPE Science Priorities
1995

Increased Emphasis
- Atmospheric Sciences
- Earth System + Ecol'l Modeling
- Nat'l Hazards (drought + floods)

Initiate Program
- Ecol'l Consequences of LCC

Maintain Current Program
- Phys. Ocy + Oc. Modeling

Reduce Slightly
- Ocean Biology
- Polar Program

Reduce Significantly
- Geology
- Geopotential fields
- Geodynamics

Customers

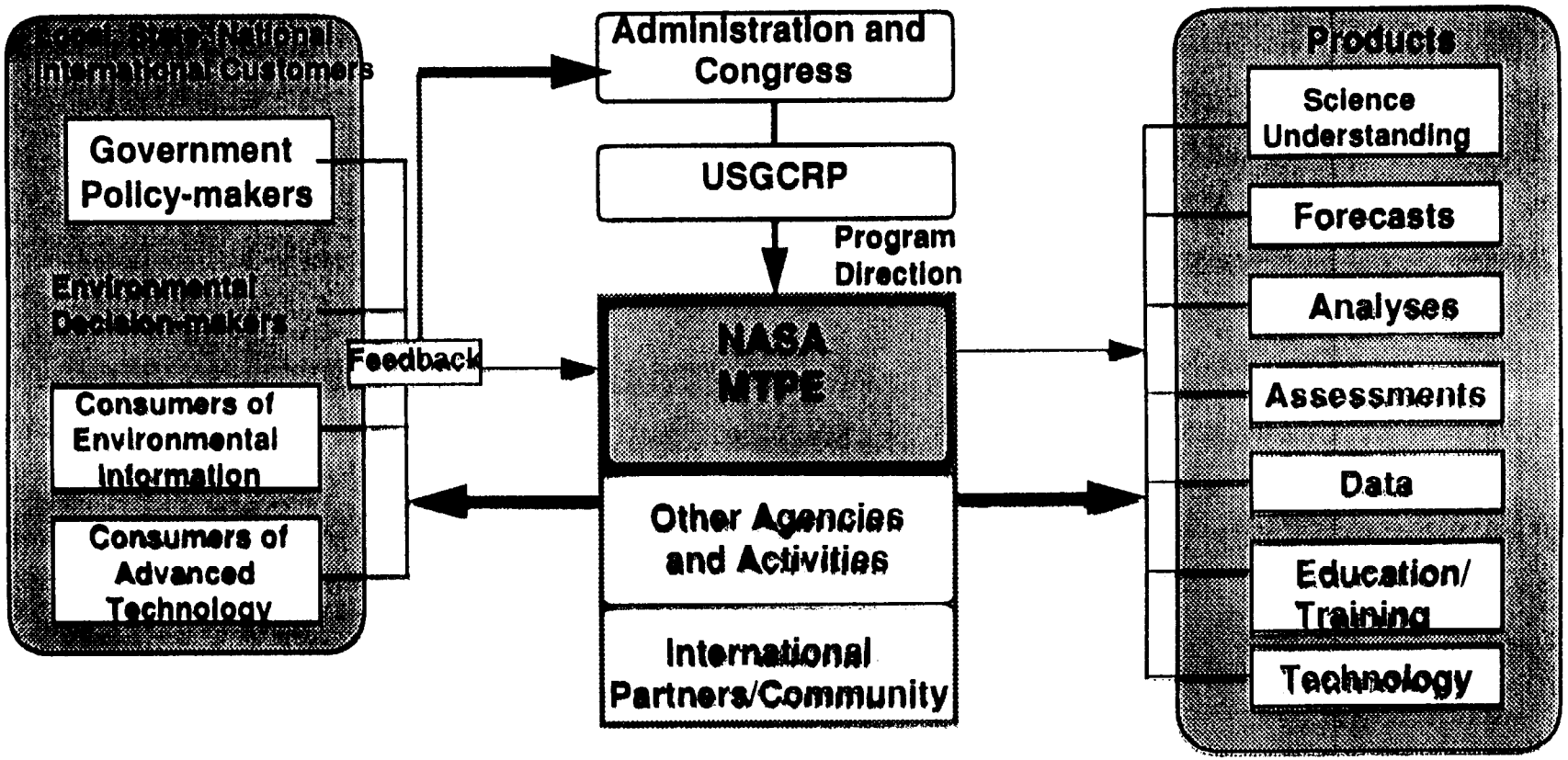
Local, State, National
International Customers
Government Policy-makers
Environmental Decision-makers
Consumers of Environmental Information
Consumers of Advanced Technology
Feedback
Administration and Congress
USGCRP
Program Direction
NASA MTPE
Other Agencies and Activities
International Partners/Community
Products
Science Understanding
Forecasts
Analyses
Assessments
Data
Education/ Training
Technology

OCTS - A PERSPECTIVE

Hajime Fukushima

Feb. 22, 1995

at Multisensor Workshop, RSMAS, Univ. of Miami

OCTS (Ocean Color and Temperature Scanner) is ...

- to fly on ADEOS
- together with
  - AVNIR
  - NSCAT
  - POLDER
  - TOMS
  - ILAS
  - IMG
  - RIS
- launched by H-II rocket in February, 1996

in the consequences of discussions in JUWOC meeting...

OCTS is an Ocean Color Sensor ...

- **that mostly shares mission objectives with SeaWiFS, and**
- **is highly compatible with SeaWiFS in**
  - **Sensor Specs,**
  - **Algorithms (eventually),**
  - **Data Products, and**
  - **?**
- **but not exactly the same as SeaWiFS**

Sensor Specs:

- visible bands mostly compatible with SeaWiFS in
  - Band Selection
  - Bandwidth
  - Similar Spatial Resolution : 700 m IFOV at nadir
  - Polarization Sensitivity
  - SNR
- Differences from SeaWiFS
  - Complicated band registration required
  - Fly with other sensors
  - Observes SST
  - Observes Land (even Snow/Ice)
  - Saturates at cloud in "ocean mode"
  - Performs less well in
    - Sensor Ringing

Product Specs:

- Compatibility to SeaWiFS considered
- Collect all the "Global" LAC (700m IFOV) data for future products

Algorithms:

- Atmospheric Correction
  - CZCS-type with Asian dust correction as "at launch"
  - SeaWiFS compatible algorithm in consideration
- Bio-optical Algorithm
  - Similar situation as for Atmospheric Correction

Mission Operation:

- Full operation in "sun-lit" area for 3 years
- Mostly operated in "ocean obs. mode"
- Operated in "land mode": about 10 % of total?

Calibration:

- Inter-calibration between SeaWiFS undergoing
  - Johnson - Sakuma in cooperation
- In-situ instrument round robin
  - participating in the SeaWiFS round robin
  - domestic round robin in extended form to be approved
    - NASDA/SIS be installed and calibrated
    - proposed starting "new" RR series in '95
      - Hindrance: Human Resource

Calibration (continued):

- Vicarious Calibration
  - Buoys
    - NASDA/YBOM - NASA/MOBY
    - Other Buoys?
  - Other in-situ
    - EORC data base system in design phase
    - JFA fleet to collect in-situ data based on the collaboration with NASDA
    - "Volunteer" effort be supported by NASDA
    - "Field Program Management" personnel wanted
    - International collaboration be sought but not easy?
      - NASDA-NASA agreement to go?
      - Collaboration with PML(U.K.) proposed

Data Systems

- In-situ data base under implementation
- Auxiliary data may be available only for ADEOS PIs
- High-speed link between NASDA/EOC and NASA via JPL
- Software support for the community proposed but...

International Coordination as International Liaison

- Language problem
- Lack of human resources & structure
- EORC (Earth Observation Research Center) is taking the responsibility

ADEOS/OCTS Project Structure

- **ADEOS Project Scientist: H. Shimoda**
- **OCTS Sensor Team: T. Takashima, chair**
- **OCTS Cal/Val WG: H. Fukushima**
- **OCTS Buoy WG: Y. Senga**
- **Marine Biology Science Team: T. Saino, chair**
  J.Ishizaka, vice chair
- **Project (at EORC, starting April?)**
  - OCTS Project Manager: TBD
  - Cal/Val Manager: M. Shimada

GLI in a word...

- Similar to MODIS-T as an ocean color sensor
- observes land/atmosphere/cryosphere in addition to color mission
- 1999-2002 mission planned
- 4-day cycle orbit with 1030 ECT
- Tilt/Non-tilt still in question
- More "internationally-oriented" team structure?
    - cooporation/collaboration with MODIS sought

(10) MTF >0.35

(11) Band to Band Registration

0.49pix (before geometric correction with GCP)

0.08pix (after correction)

ambiguity due to on-board thermal condition still remains

Outline of the Calibration / Validation for OCTS

H. Fukushima, Tokai University
(Lead, OCTS Cal/Val WG)

February 22, 1995 at RSMAS, Univ. of Miami
(originally presented at the 1st ADEOS Workshop in Dec. 1994)

Outline of the Calibration / Validation for OCTS

H. Fukushima, Lead, OCTS Cal/Val WG

Definition of Calibration and Validation

- to relate sensor output (DN) to input radiance with specified accuracy
- to specify the accuracy of derived geophysical parameters

OCTS Cal/Val Working Group

- WG Members: H.Fukushima, K. Arai, Y. Kawata, M. Kishino, Y. Mitomi, S. Saitoh, M. Shimada, S. Taguchi, T. Nakajima, K. Furuya, Y. Honda, Y. Yasuda, R. Yokoyama, Y. Senga
- To form an operational and effective single Cal/Val team in cooperation
- with the NASDA/EOC Cal/Val Team (after spring, 1995)
  - M.Shimada, K.Imaoka, H.Oaku
  - 2 from RESTEC
  - Some from NEC
  - TBD at Earth Obs. Res. Center (EORC)

OCTS Cal/Val Working Group (Cont'd)

- Objectives:
  - to Make Requirements on Cal/Val Plan
  - to Compose Cal/Val Plan
  - to Conduct Ground-Level Observation
  - to Collect Truth-Data with QC
  - to Update Satellite Sensor Calibration
  - to Evaluate Procedure for Algorithm Validation

Mission and Cal/Val Goals

- Ocean Color (Visible Band Data at "Ocean Observation Mode")
  - Pigment and Chl-a
    - ~30% accuracy required under clear sky
      - to perceive "Inter-annual variability"
    - Requires 5% accuracy in Lw
    - in turn requires 1% relative accuracy in Lt measurement
  - compatibility / inter-operability to SeaWiFS be attained
- Sea-Surface Temperature (TIR Band Data)
  - Requires TBD accuracy
  - Global SST Map for the 1st time by Japan
- Ground Reflectance (Visible Data at "Land Obs. Mode")
  - Vegetation
  - Ice/Snow
  - Reqirement on accuracy: TBD

Calibration/Validation Strategy

- General:
  - Procedure for Calibration be Studied Shortly (by January, 1995?)
  - Collect as much ground-truth data as we can
- Ocean Color Bands
  - Priority on Vicarious Calibration
    - for Calibration Monitoring
  - Quality Check for In-situ Data Required
  - SeaWiFS data also be used for Calibration and Validation
  - Collaboration with the SeaWiFS Project Planned
- Thermal Infrared Bands for SST
  - Routine Parameter Tuning Highly Desirable
    - by Match-up Data Set
    - in use of NOAA/JMA/other "near-real time" data

Field Programs

- ADEOS Campaign / OCTS Programs
- Ocean (Color and SST)
  - Ships
    - JFA Fleet Data Collection (Collaborative Program)
    - Organized Cruises (OCTS Cruises)
    - Ships of Opportunity
      - Cruise by OCTS PI or other researchers
  - Buoys
    - NASDA Buoy
      - will be called "YBOM" if successfully deployed to Yamato Bank, Japan Sea (Yamato Bank Optical Mooring)
      - efforts made to maintain the buoy
      - Advised by the Buoy Working Group headed by Y. Senga
    - NASA Buoys
      - MOBY at off Lanai
      - Bermuda Time Series?
      - Mississippi
    - Others?

Field Programs (conten'd)

- Atmosphere
  - Aureolemeter / Aerosol Sampler Network (Proposed)
    - Ground Stations:
      - One Island in addition to Niigata Planned
      - Additional Sites Proposed
    - Ship Observation:
      -
- Land
- Airplane Experiment
  - Joint Experiment with POLDER or AVNIR under planning
  - To be icluded into the ADEOS field campaign / Ocean
  - Periodical Calibration Experiment
    - Once per half year at White Sands with AVIRIS observation proposed

Other Proposed Cal/Val Activities

- Promote Standardized Measurement
  - Participate in Round-Robin
  - Compose Manual on Pigment Measurement and Primary Production Measurement
- Promote in-situ data exchange
- user-support
  - dissemination of information
  - Opportunities for discussions
    - E-mail system
  - Software for Processing be provided
  - News and Reports be provided
    - Mechanism to notify "calibration update" needed
    - same for "reprocessing" with new calibration / algorithms

Need discussions on ...

- Implementation of "international Cal/Val"
-

OCTS Calibration and Validation

- On Orbit Calibration scheme -

Masanobu Shimada, Keiji Imaoka,
Hiromi Oaku, Tsutomu Takashima
Earth Observation Center
National Space Development Agency of Japan

RSMAS U of Miami ~~Kyoto~~ ~~Japan~~
Feb 22 '95
~~Dec. 1 '94~~

Input Data for OCTS calibration

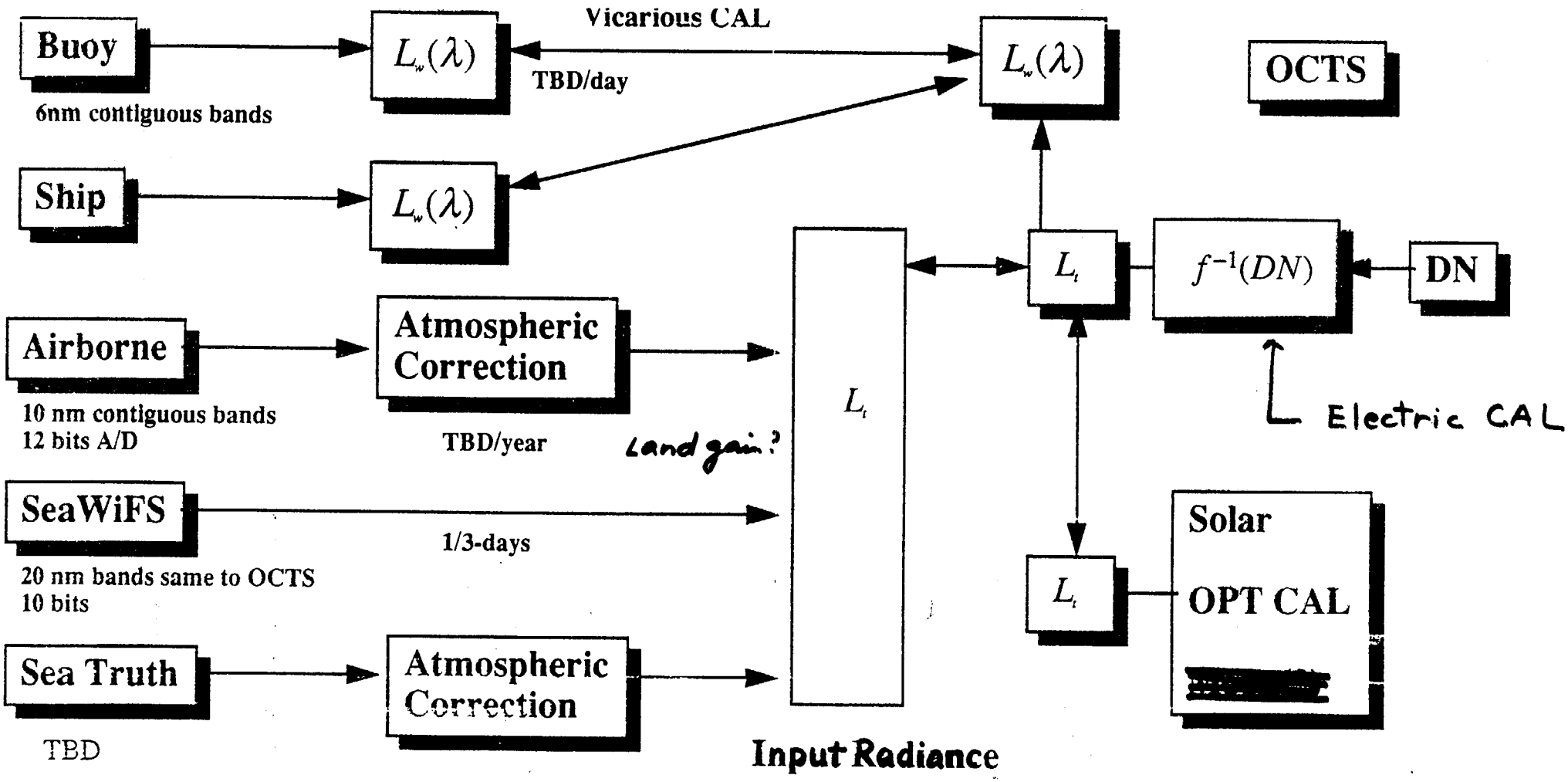

OCTS CAL/VAL time schedule and different signal sources

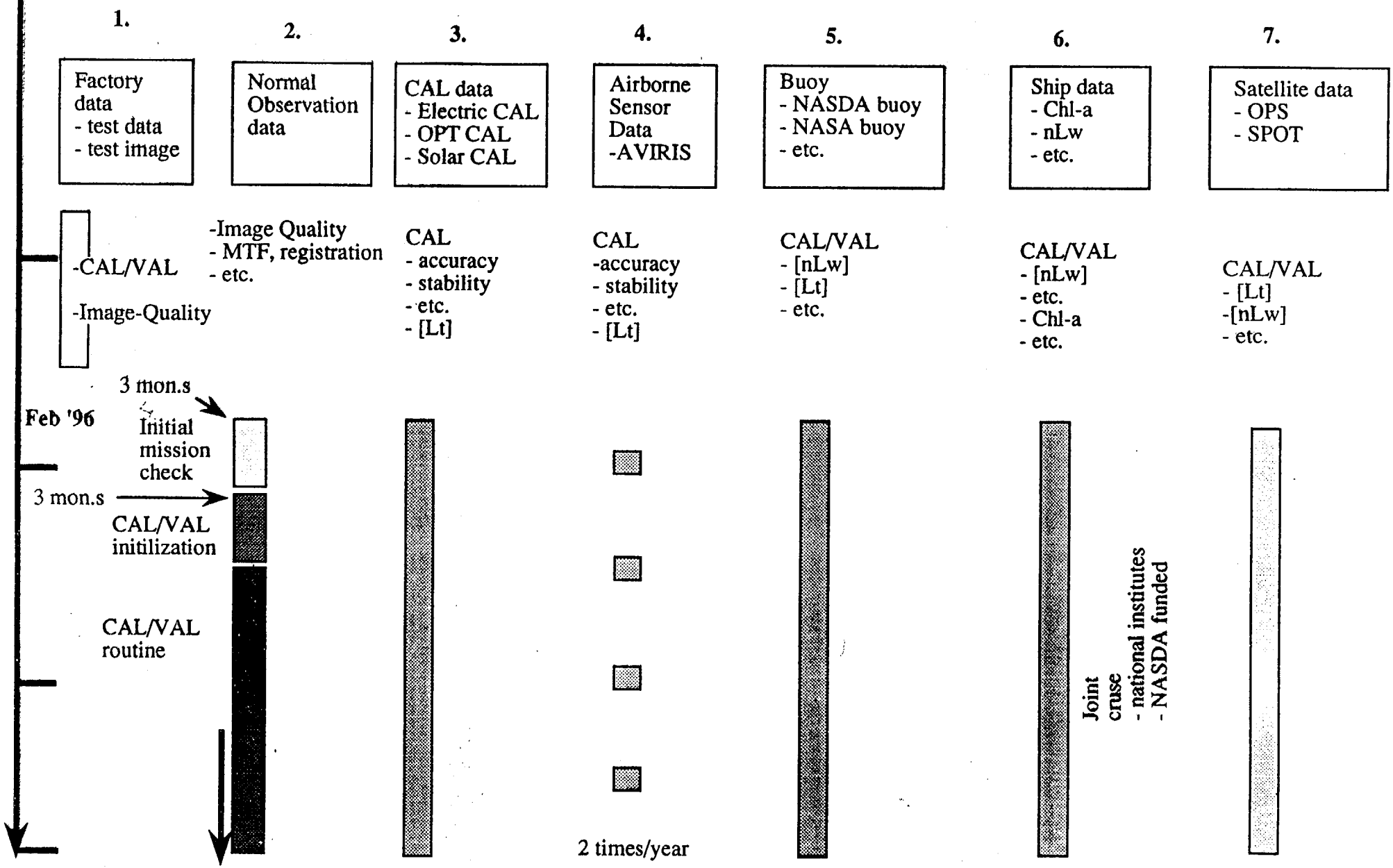

OCEAN COLOR AND TEMPERATURE SCANNER

OCTS

December, 6, 1994

NATIONAL SPACE DEVELOPMENT AGENCY OF JAPAN

NASDA

F I G. 1 DEVELOPMENT RESULT OF CORE SENSORS

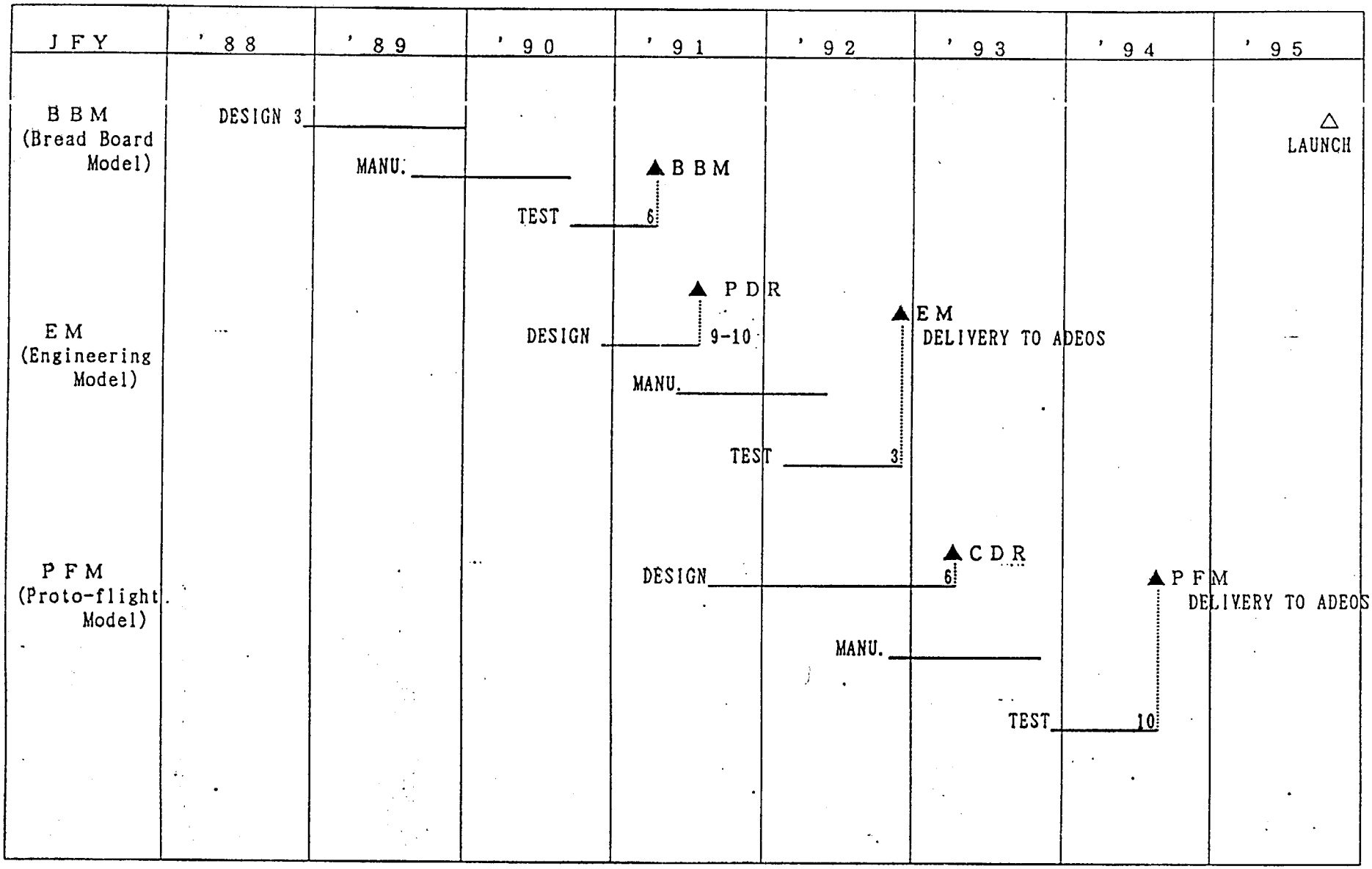

3. Main functions of OCTS

1) Multi-spectral and high sensitivity observation
2) Frequent observation of the same area by wide swathwidth
   swathwidth : ~1400km, every 3days
3) Tilt function : ±20deg along track
4) Optical calibration in visible and near-infrared region
   using sun light and halogen lamp
5) Two data transmission mode
   - Fine data transmission mode
     Each pixel data are transmitted through ADEOS MDP.
   - Coarse data transmission mode
     Sampled data are transmitted through ADEOS DTL.
     a) Bands : B2(443nm), B5(565nm), B6(667nm), B11(11μm)
     b) Sampling
        From 6×6km area one pixel data is sampled and transmitted as the typical data of that area.

Fig. 2 THE CONCEPT OF OCTS OBSEVATION

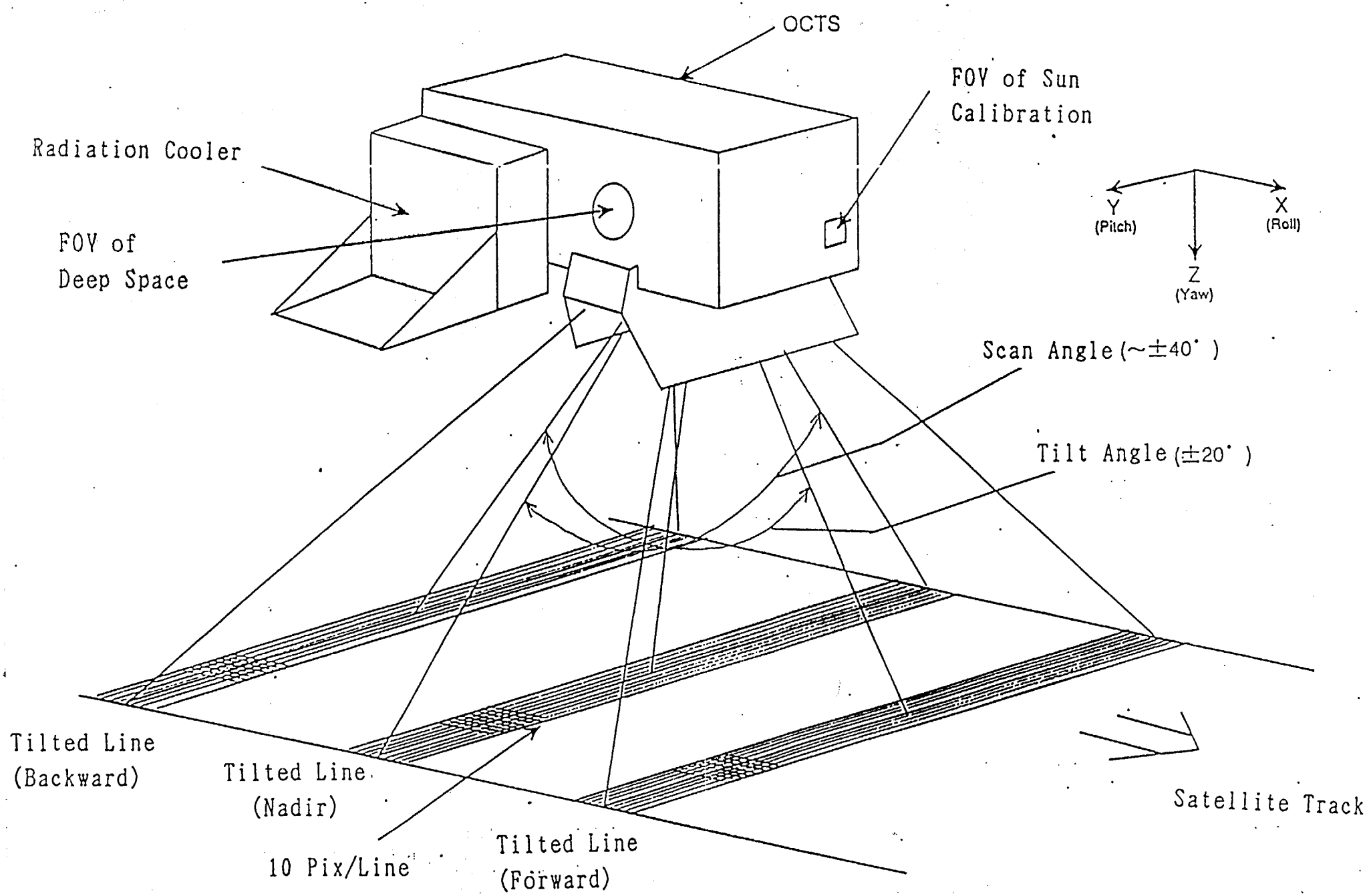

4. Outline of OCTS design

1) OCTS consists of two units, SRU and ELU.

2) Weight 375kg,

Electrical power consumption 330w

Design life 3years

Duty cycle 0.33

3) Optics and Beam splitter

- Catoptric and relay optics

  aperture size : 27cmϕ, silver coating mirror, effective Fno :~1.1

- 3 focal planes B1~B4 / B5~B8 / B9~B12

  trimming filter : on primary focus (B1 ~ B8)

  on focal plane (B9 ~ B12)

- Depolarizer for polarization sensitivity

4) Scanning mechanical assembly

- Scan mirror : Silver coating, 59×43cm
- Scanning mechanism : brushless DC motor
- Tilt mechanism

  step motor and harmonic gear

  Tilt axis is perpendicular to the scan axis.

5) Detectors

Linear array parallel to along track : 10pix/band

B1～B8 : Si

B9 : InSb

B10～B12 : HgCdTe

6) Radiation cooler

- Consists of two stages

  aperture size : 80×80cm

- Infrared focal plane is installed on second stage
- Constant temperature control : 100k

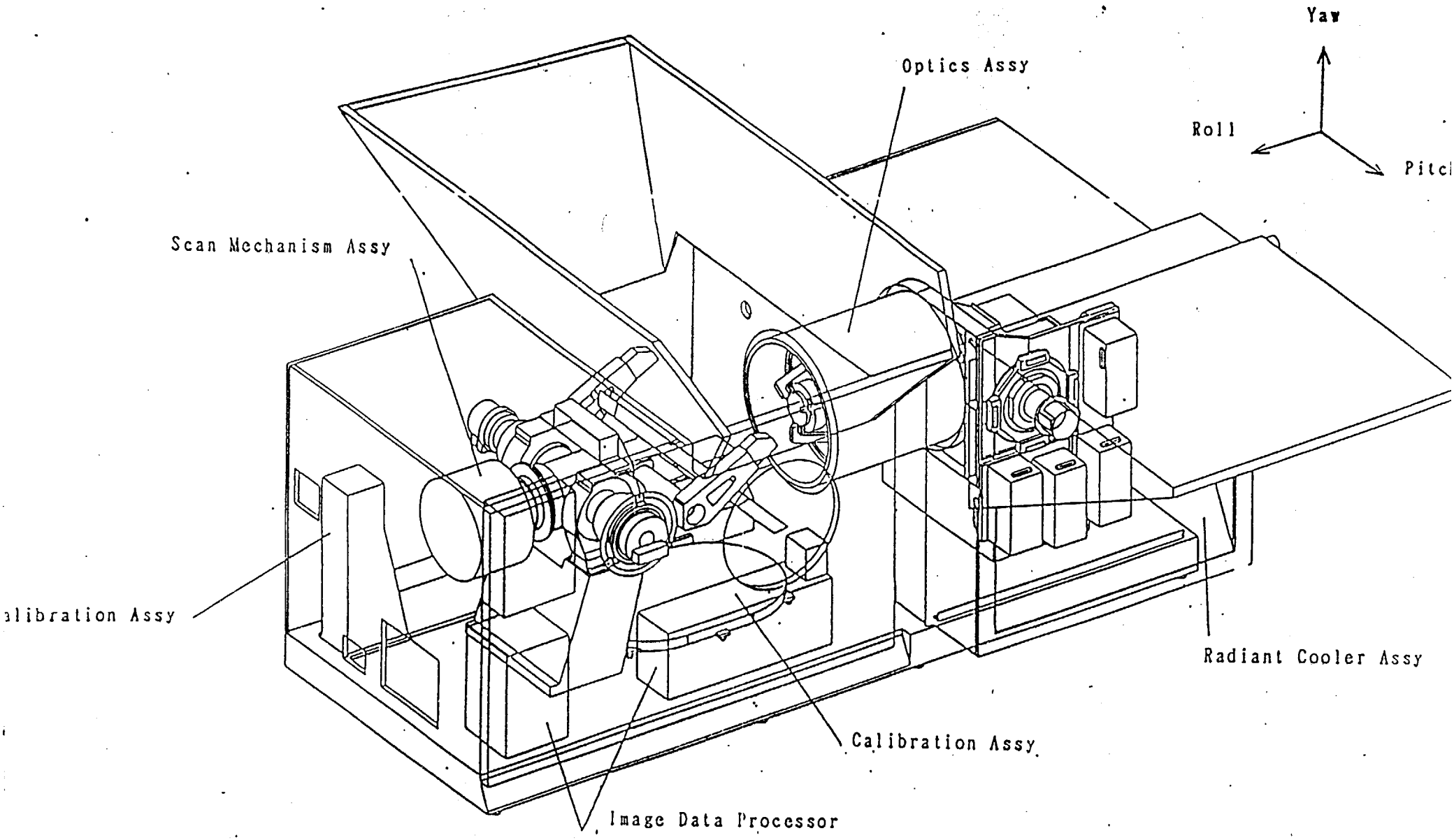

Ocean Color and Temperature Scanner (OCTS)

Scanning Radiometer Unit

5. Performance of PFM

(i) Observation wavelength

Band	Center Wavelength (μm)	Band Width (μm)
1	0.412	0.018
2	0.443	0.020
3	0.490	0.023
4	0.516	0.015
5	0.565	0.019
6	0.667	0.021
7	0.765	0.041
8	0.862	0.039
9	3.57 ~	3.85
10	8.26 ~	8.75
11	10.70 ~	11.35
12	11.43 ~	12.53

・Band shapes are shown in Fig. 3.

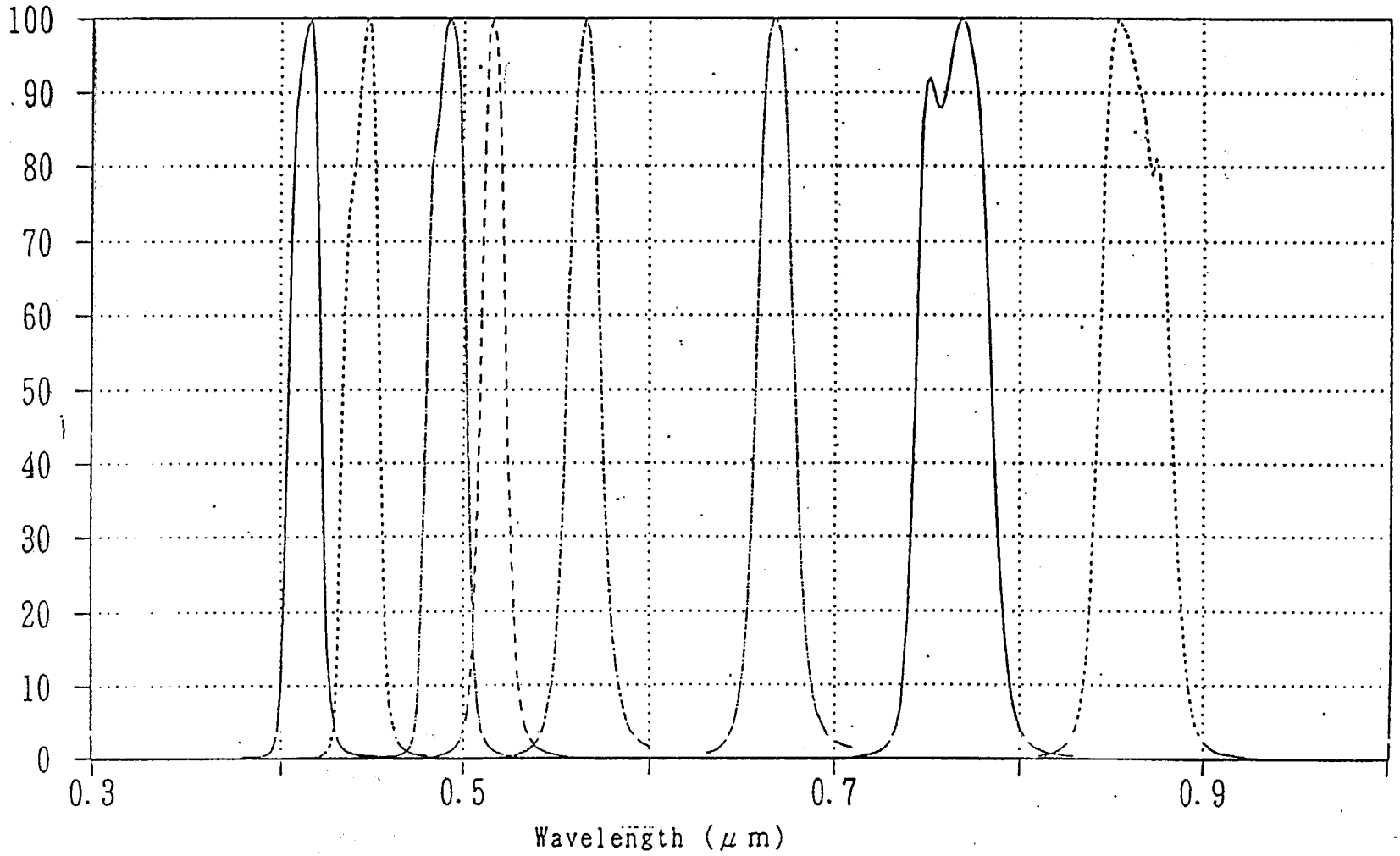

Fig. 3 (1/2) Band Shape (Visible & Near-infrared)

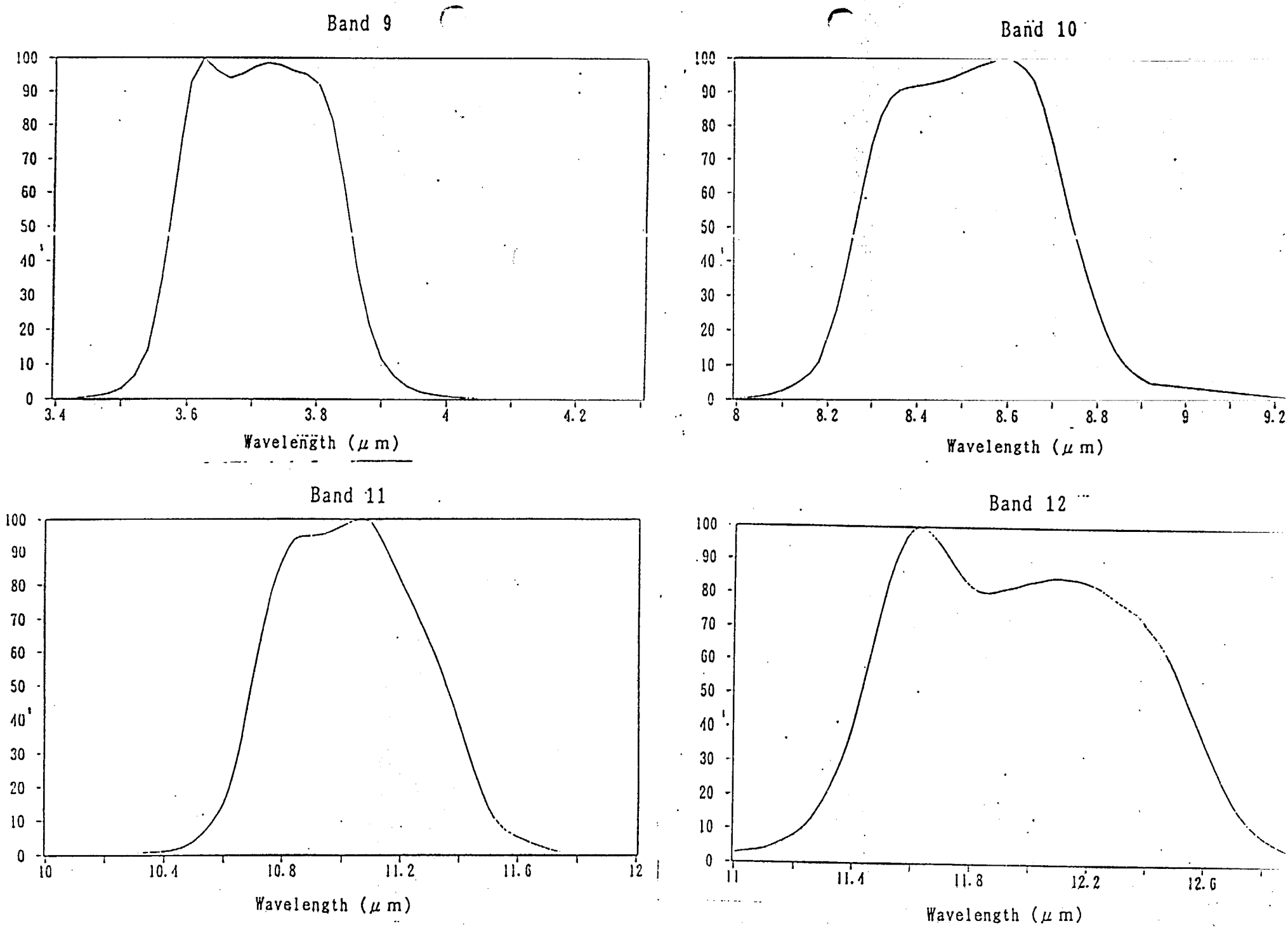

Fig. 3 (2/2) Band Shape (Infrared)

(2) Gain

1) Visible and Near-infrared Bands

OCTS has 4 gains. Each band can change its gain independently.
Maximum observable radiance with each gain is shown below.

(W/m²/St/μm)

Band	For Ocean Observation		For Land Observation	
	Normal Gain $L\lambda max(O)$	High Gain $L\lambda(O)$	Normal Gain $L\lambda max(L)$	High Gain $L\lambda(L)$
1	145	97	145	97
2	150	100	150	100
3	130	87	250	167
4	120	80	290	193
5	90	60	310	207
6	60	40	270	180
7	40	27	230	153
8	20	13	200	133

2) Infrared Bands

OCTS has 3 gains. Each band can change its gain independently.
Observable highest target temperature with each gain is shown below.

	Target Temperature (K)
Gain-1	340
Gain-2	320
Gain-3	300

(3) S/N and NEDT

1) Visible and Near-infrared Bands with Ocean Normal Gain

Band	High Input Level		Low Input Level	
	Input Radiance ($W/m^2/St/\mu m$)	S/N	Input Radiance ($W/m^2/St/\mu m$)	S/N
1	145	>450	10	>30
2	150	>700	8	>40
3	130	>1000	11	>100
4	120	>1000	12	>100
5	90	>1000	8	>100
6	60	>1000	3	>50
7	40	>1000	2	>60
8	20	>600	2	>70

2) Infrared Bands with Gain-1

Band	High Input Level		Low Input Level	
	NEDT	Target Temp. (K)	NEDT	Target Temp. (K)
9	<0.13	300	<1.3	250
10	<0.07	300	<0.4	200
11	<0.09	300	<0.6	180
12	<0.16	300	<1.1	180

(4) Stability of Sensitivity in Visible and Near-infrared Bands

<3.9% for thermal condition and electric power condition

(5) Polarization Sensitivity

Band	Sensitivity(%)
1	<0.58
2	<1.12
3	<1.05
4	<1.05
5	<1.63
6	<1.32
7	<1.83
8	<1.95

(6) Quantization Bit Number 10bits/pix

(7) Non-Linearity

Band1～8 : <±2%

Band9～12 : <±4% or 1count

(8) IFOV Band1～12 : 0.85mrad

(9) FOV Swathwidth : ～1400km

(10) MTF >0.35

(11) Band to Band Registration

0.49pix (before geometric correction with GCP)

0.08pix (after correction)

ambiguity due to on-board thermal condition still remains

(12) Bright Target Recovery

< 10pix from 0% to 100% (100% to 0%) of maximum output

(13) Stray Light

No stray light response is observed.

(14) Tilt

1)Step angle : -20deg, 0deg, +20deg

2)Settling time : <25sec

3)Tilt angle accuracy : <±0.024deg

4)Tilt angle knowledge

<±0.032deg (before correction)

<±0.0028deg (after correction with resolver data)

CURRENT STATUS OF GLOBAL IMAGER (GLI)

CURRENT SCHEDULE OF ADEOS-II & GLI

NASDA
NATIONAL SPACE DEVELOPMENT AGENCY OF JAPAN

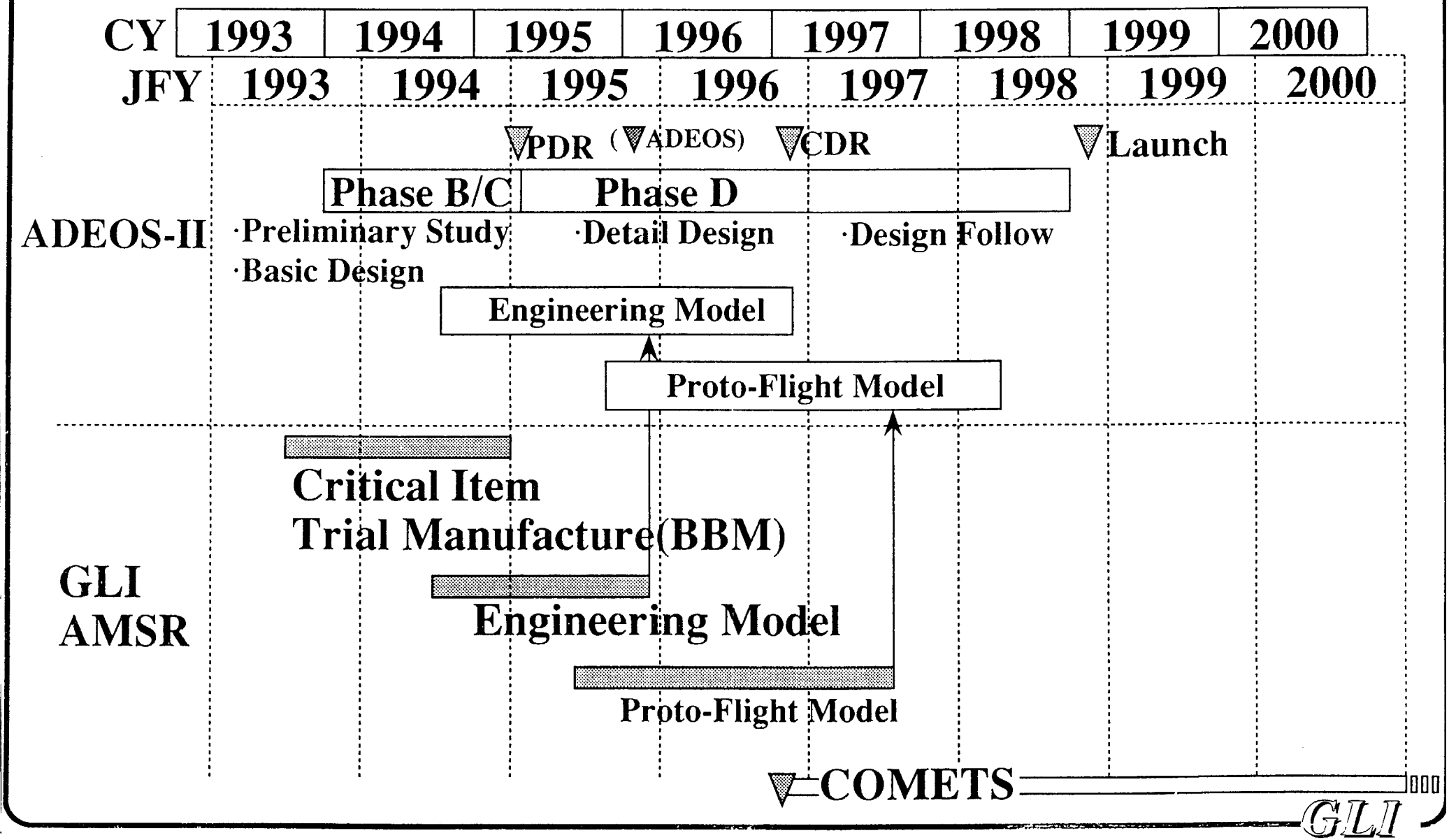

GLI

GLOBAL IMAGER CHARACTERISTICS

NASDA
NATIONAL SPACE DEVELOPMENT AGENCY OF JAPAN

- Multi Bands and High Spectral Resolution Imaging

- Visible and Near to Thermal Infra-Red Spectral Bands

PRIMARY SCIENTIFIC OBJECTIVES OF GLI

NASDA
NATIONAL SPACE DEVELOPMENT AGENCY OF JAPAN

- Ocean Dynamics
  - •sea surface temperature
- Ocean Biology
  - •sea surface color
- Ice and Snow
  - •Ice and snow cover

PRIMARY SCIENTIFIC OBJECTIVES OF GLI

NASDA
NATIONAL SPACE DEVELOPMENT AGENCY OF JAPAN

- Land
  - •global Vegetation Coverage
  - •land surface temperature
- Atmospheric Dynamics
  - •Atmospheric temperature
  - •cloud distribution

GLI CURRENT PROGRESS

NASDA
NATIONAL SPACE DEVELOPMENT AGENCY OF JAPAN

- 1990:Design Study
- 1991:Preliminary Design
- 1992:Key Component Fabrication and Test (Spectrometer)
- 1993-1994:*Trial manufacture of Critical component* (Breadboard model)
- 1994-1995:*Engineering Model*
- 1995-1997:Proto-Flight Model

BLOCK DIAGRAM OF GLI

NASDA
NATIONAL SPACE DEVELOPMENT AGENCY OF JAPAN

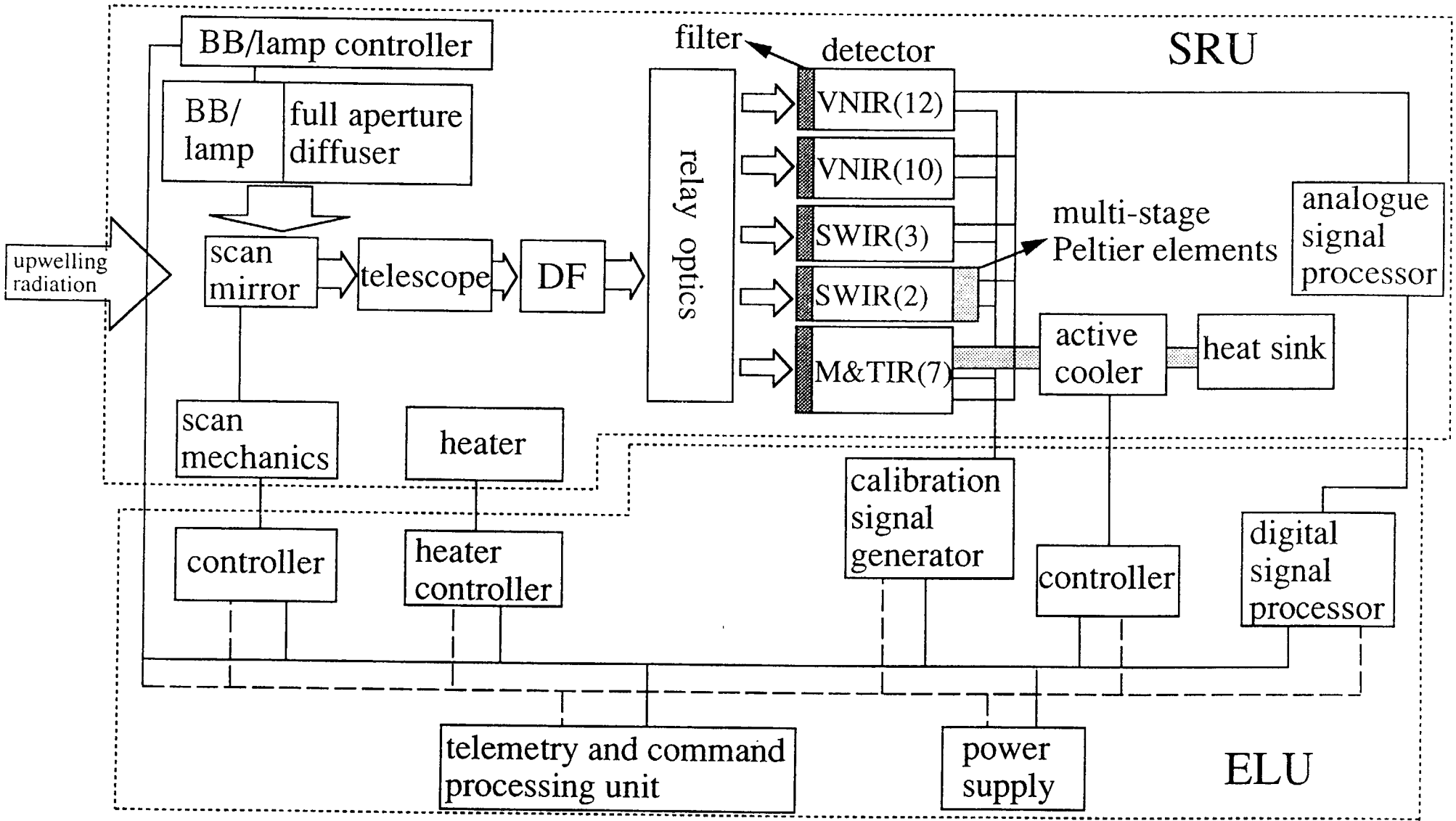

GLI

PERFORMANCE (PROVISIONAL)

NASDA
NATIONAL SPACE DEVELOPMENT AGENCY OF JAPAN

Spectral range	375nm-12.5μm (TBD)
Number of Spectral bands (under 1μm / 1-3μm / over 3μm)	34 (22 / 5 / 7)
Spectral bandwidth	10nm(visible/1km)
IFOV	312.5μrad/1.25mrad (250m/1km at nadir)
FOV	about ±43° (48°) (swath=1600km)

GLI

PERFORMANCE(PROVISIONAL)

NASDA
NATIONAL SPACE DEVELOPMENT AGENCY OF JAPAN

S/N,NEΔT	800,0.1K
Quantization	12 bits
Polarization sensitivity	under 2%
Data rate	4 Mbps (1km reso.) <16Mbps (250 m reso.)
Scanning method	Wiskbroom scan with flat mirror
Tilt angle	$\pm 20^\circ$

GLI

MISSION REQUIREMENT(VIS.&NIR)

NASDA
NATIONAL SPACE DEVELOPMENT AGENCY OF JAPAN

	wave length nm	Δλ nm	IFOV m	S/N	A/D
1	380	10	1000	>600	12
2	400	10	1000	>800	12
3	412	10	1000	>800	12
4	443	10	1000	>800	12
5	460	10	1000	>800	12
6	490	10	1000	>800	12
7	500	10	1000	>800	12
8	520	10	1000	>800	12
9	545	10	1000	>800	12
10	565	10	1000	>800	12
11	605	10	1000	>800	12
12	625	10	1000	>800	12
13	667	10	1000	>800	12
14	678	10	1000	>800	12
15	710	10	1000	>800	12
16	748	10	1000	>800	12
17	763	8	1000	>800	12
18	865	10	1000	>800	12
19	460	70	250	>200	12
20	550	60	250	>200	12
21	670	60	250	>200	12
22	825	110	250	>200	12

* *underline:piecewise linear*

MISSION REQUIREMENT(SWIR&MTIR)

NASDA
NATIONAL SPACE DEVELOPMENT AGENCY OF JAPAN

	wave length nm	Δλ nm	IFOV m	S/N	A/D
23	1050	20	1000	>TBD	12
24	1240	20	1000	>74	12
25	1380	40	1000	>TBD	12
26	1640	200	250	>109	12
27	2210	220	250	>105	12

	wave length μm	Δλ μm	IFOV m	NEΔT K	A/D
28	3.715	0.33	1000	<0.1	12
29	6.7	0.5	1000	<0.1	12
30	7.0	0.5	1000	<0.1	12
31	7.3	0.5	1000	<0.1	12
32	8.6	0.5	1000	<0.1	12
33	10.6	0.8	1000	<0.1	12
34	11.9	0.8	1000	<0.1	12

PERSPECTIVE VIEW OF GLI

NASDA
NATIONAL SPACE DEVELOPMENT AGENCY OF JAPAN

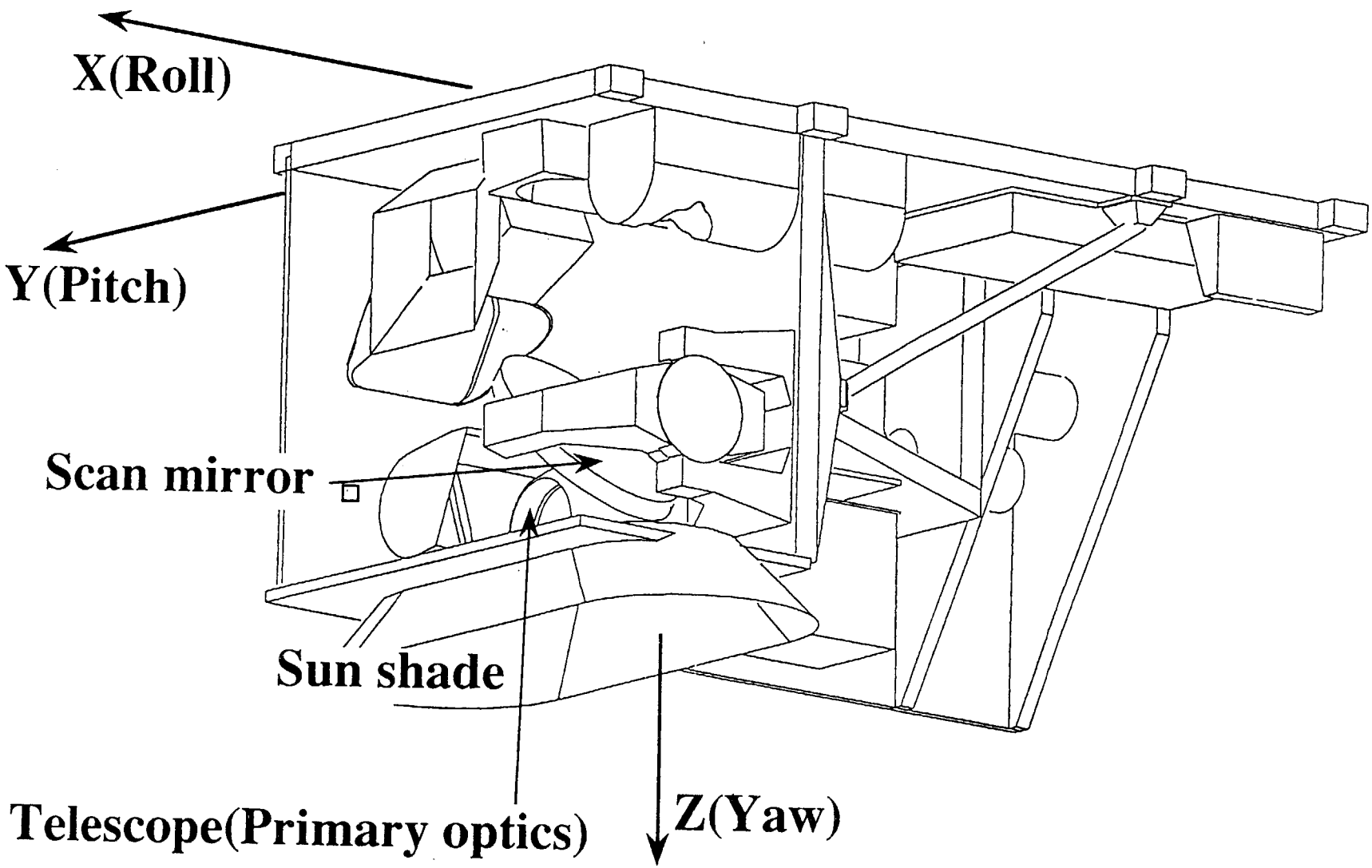

SCANNING CONCEPT

NASDA
NATIONAL SPACE DEVELOPMENT AGENCY OF JAPAN

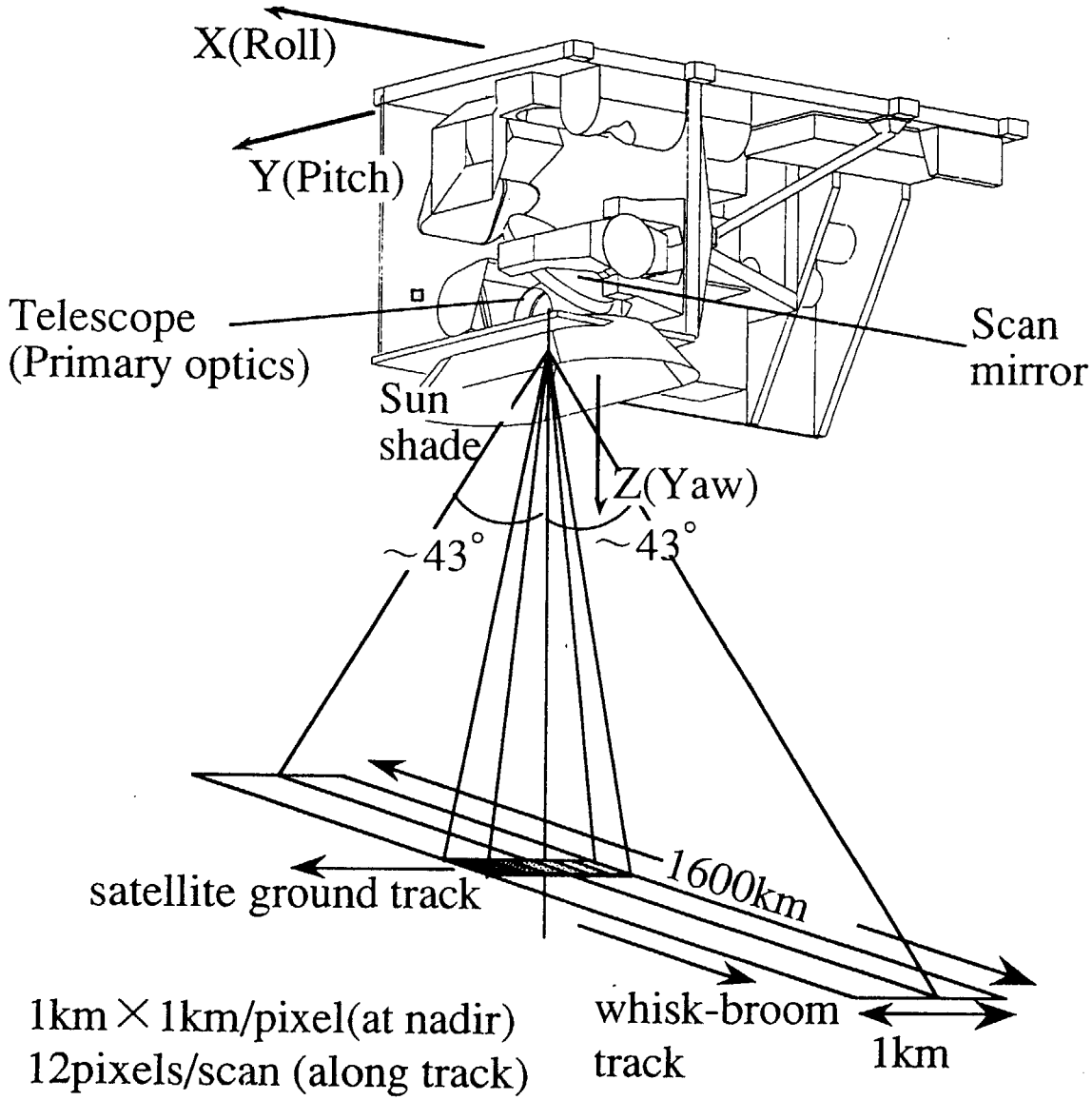

1km × 1km/pixel(at nadir)
12pixels/scan (along track)

GLI

VISIBLE AND NEAR INFRARED FOCAL PLANE

NASDA
NATIONAL SPACE DEVELOPMENT AGENCY OF JAPAN

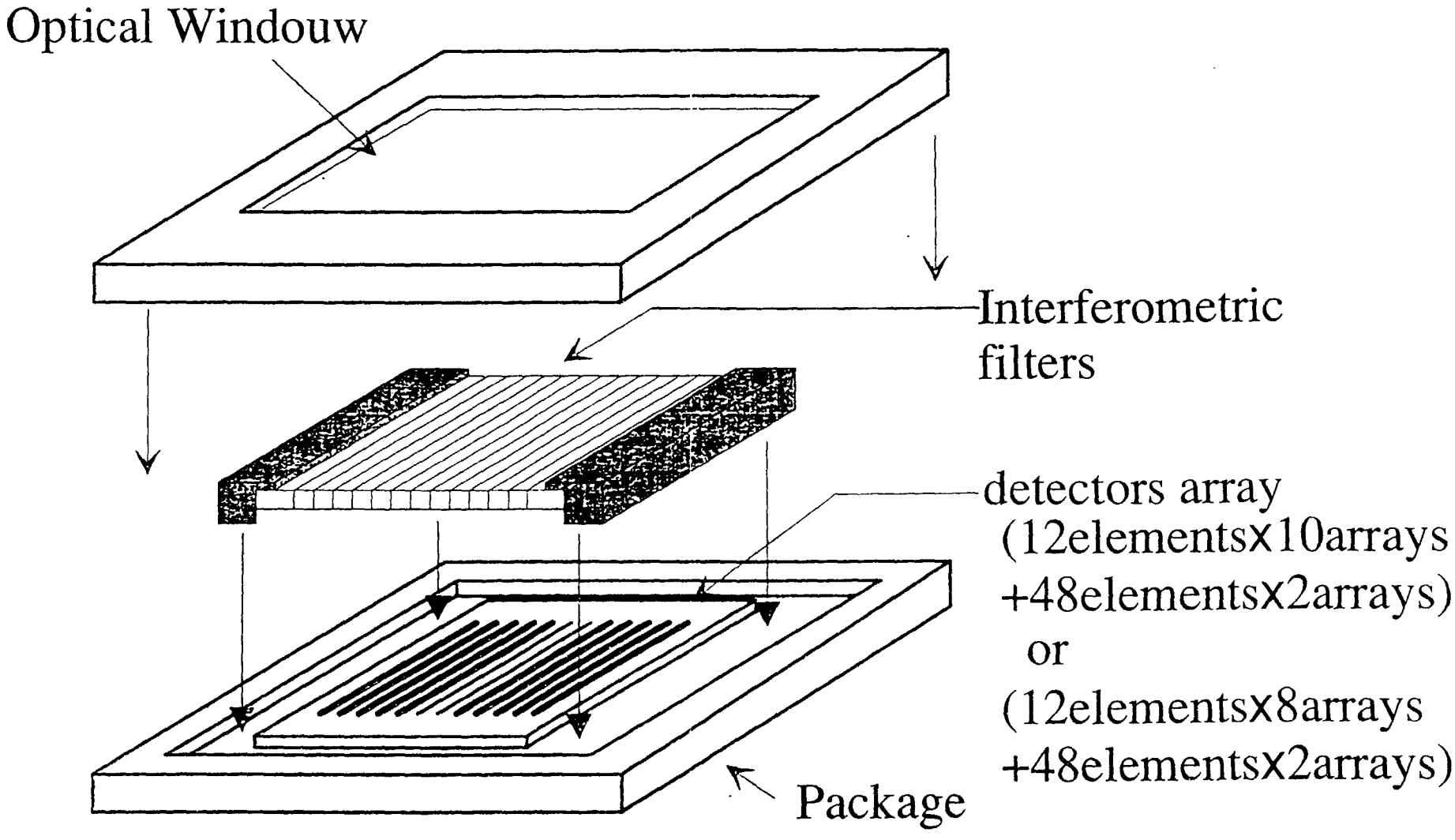

GLI

GLI OPTICS

NASDA
NATIONAL SPACE DEVELOPMENT AGENCY OF JAPAN

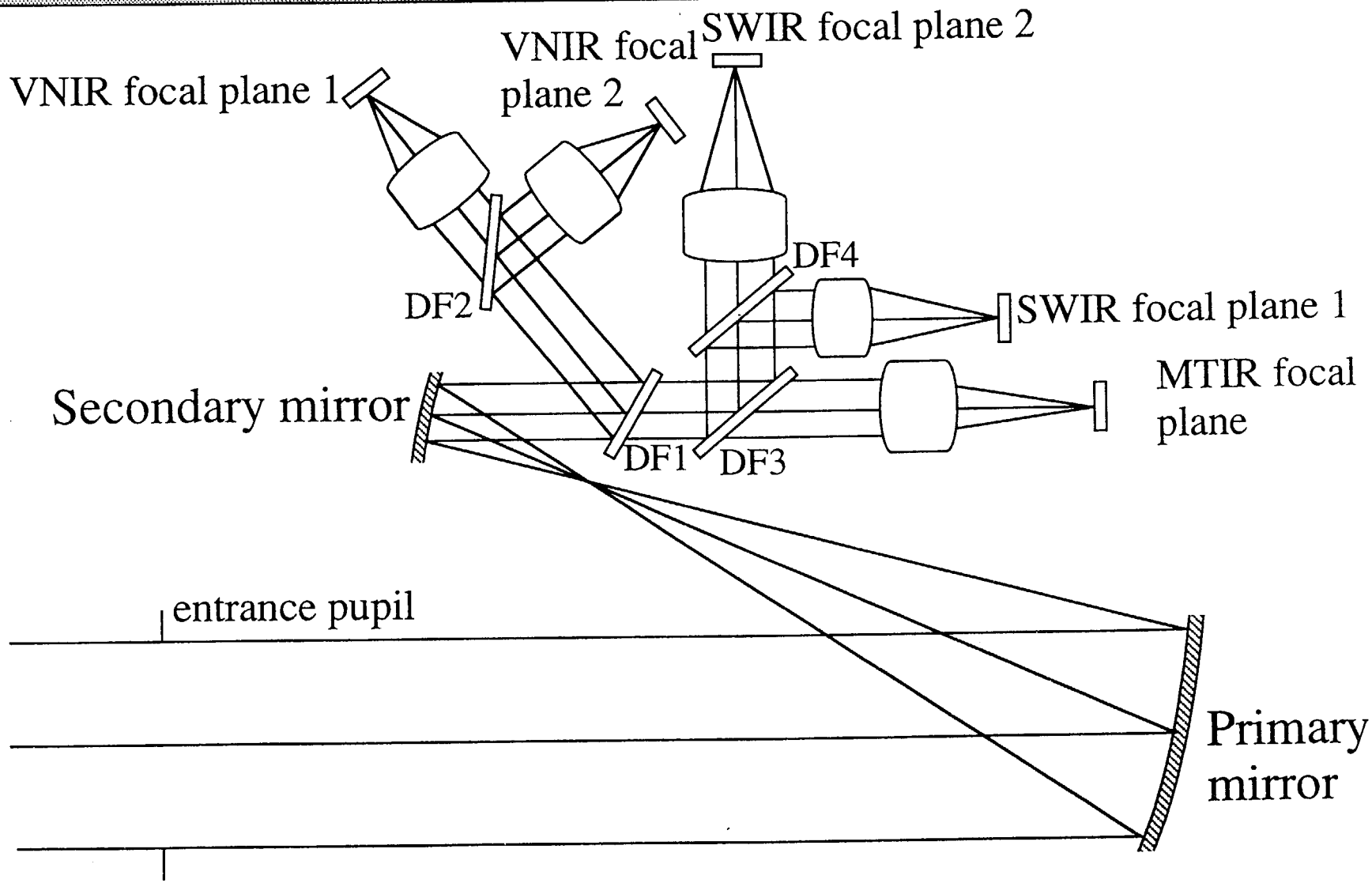

Feb. 22, 1995

GLI: Science Goals and Sensor Team Activities

prepared by Teruyuki Nakajima, CCSR/Univ. of Tokyo

presented by Hajime Fukushima, Tokai University

Features of GLI mission

Global imaging

Multi-wavelength VIS-IR radiometer

250 m - 1 km spatial resolution

↓

Near surface phenomena

↓

Environmental change/variability

Statistics for vegetation, land wetness, snow/ice, cloud microphysics, aerosols, ocean color

Global warming watching

SST, polar region, cloud amount

Fine-scale monitoring of atmosphere/land/cryosphere

Schedule for the GLI Project

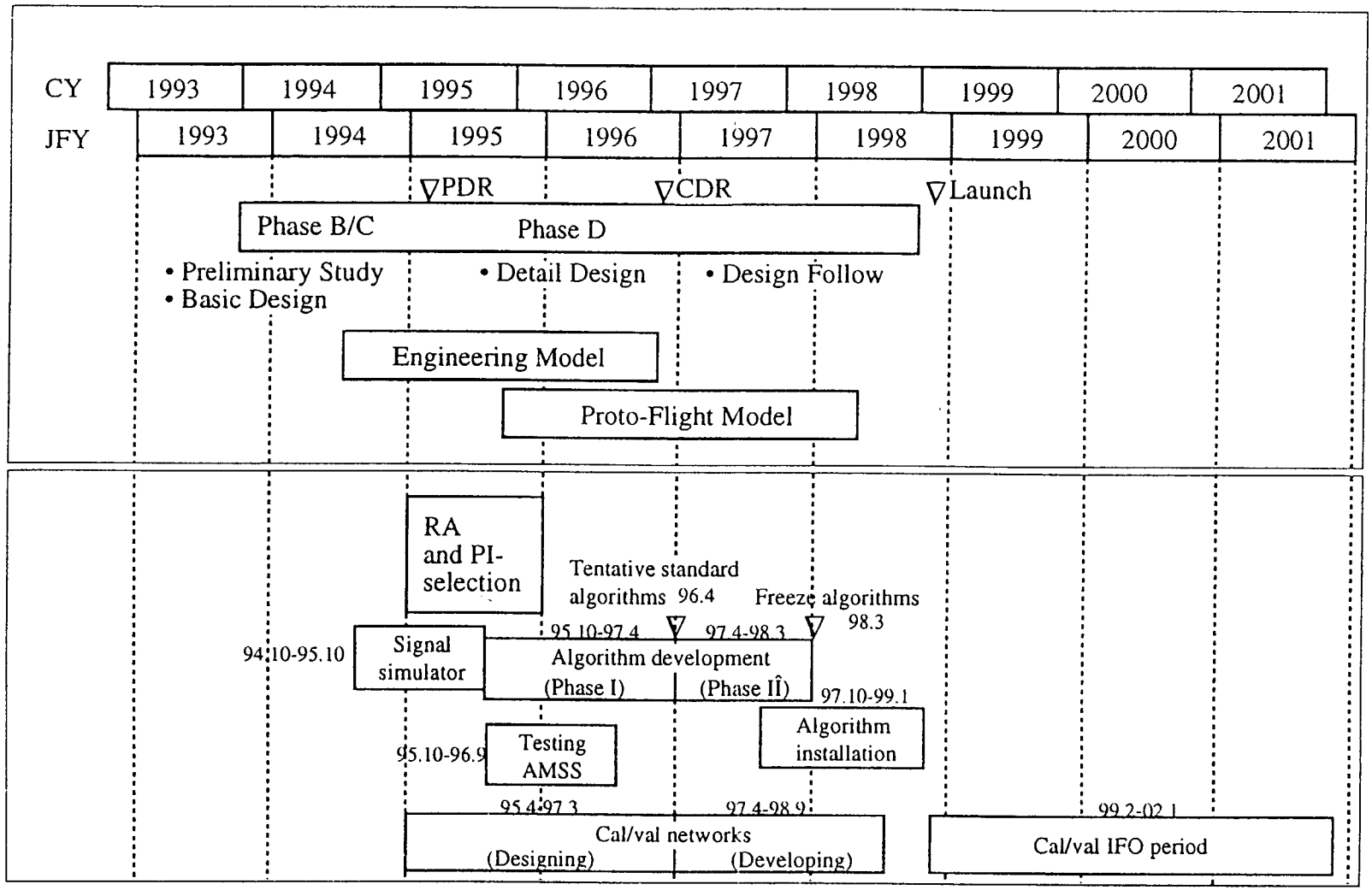

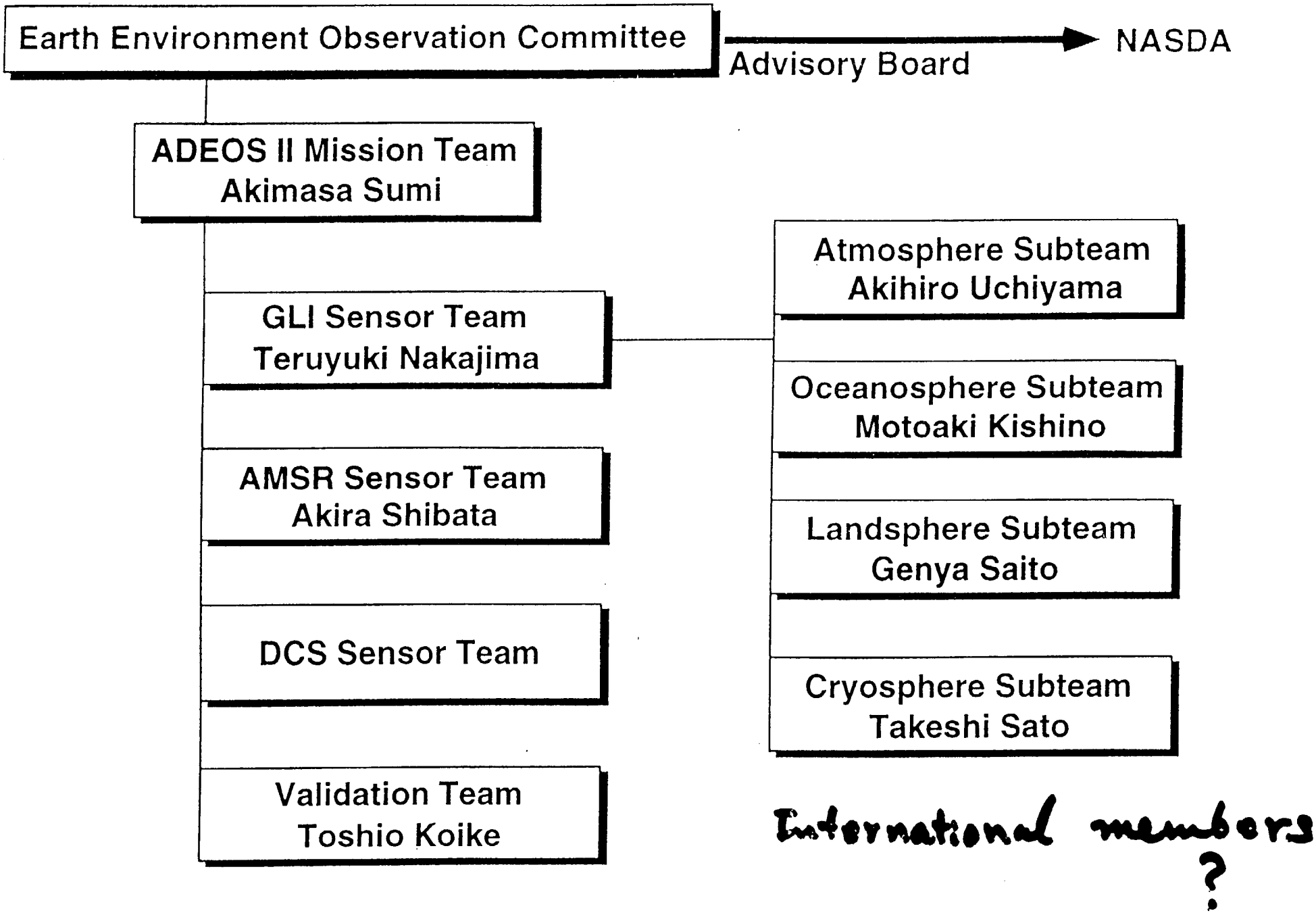
Earth Environment Observation Committee
Advisory Board
NASDA
ADEOS II Mission Team
Akimasa Sumi
GLI Sensor Team
Teruyuki Nakajima
AMSR Sensor Team
Akira Shibata
DCS Sensor Team
Validation Team
Toshio Koike
Atmosphere Subteam
Akihiro Uchiyama
Oceanosphere Subteam
Motoaki Kishino
Landsphere Subteam
Genya Saito
Cryosphere Subteam
Takeshi Sato
International members
?

The role of the sensor team

'94 GLI-sensor team ≡ Advisory board

1. Advises on the science of the GLI-mission.
2. Make a scientific scenario of the GLI-mission RA.

April '95 RA and selection of PIs ?

Opening the opportunity to all the scientists.
Establish a good NASDA-science community teamwork.

PIs + Advisory board ?

Science Team

ADEOS-II SATELLITE PROJECT ORGANIZATION

NASDA
NATIONAL SPACE DEVELOPMENT AGENCY OF JAPAN

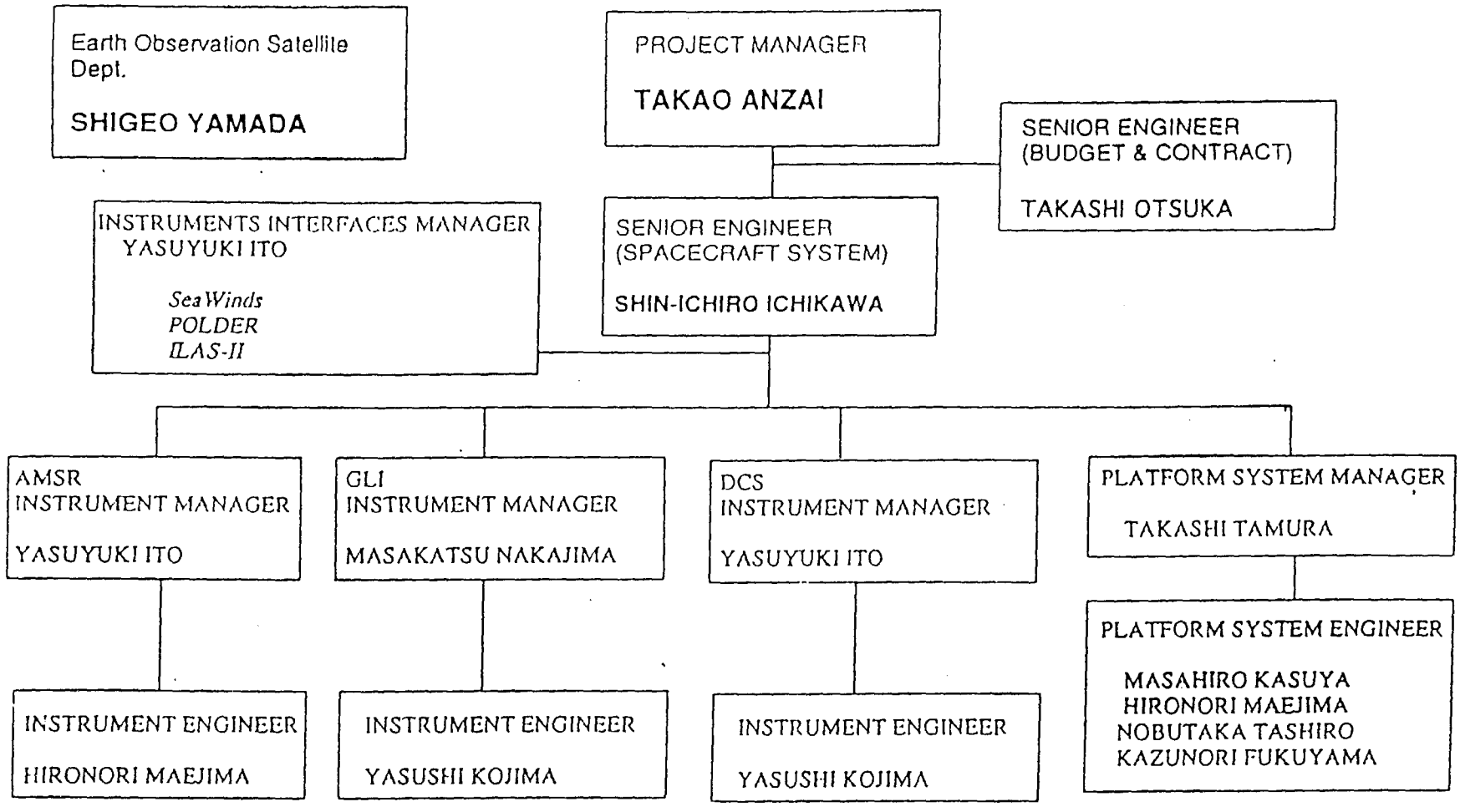

Sciences in the GLI Mission

Science Objectives:

1. Understanding of Energy/Water Circulation
2. Understanding of Carbon Cycle and Biomass Production
3. Global Change Watching

Related International Projects:

WCRP/GEWEX, CLIVAR, ACSYS; IGBP/JGOFS

Issues for High Level Products:

1. Global Scale Land/Ocean Biomass, Primary Production Annual Variability
2. Potential Land Biomass
3. Anthropogenic Pollution Effects on Cloud and Aerosol Fields
4. Water Vapor Field and Poleward Energy Transportation
5. Detection of Climate Change due to Greenhouse Gas increase

Sciences in the GLI Mission - continued

Issues for Products:

(A) Atmosphere

1. Cloud Optical Thickness, Cloud Water, Effective Radius
2. Cloud Base Height, Multi-layer Structure
3. Column Water Vapor Amount
4. Water Vapor Profile
5. Aerosol Amount, Effective Radius
6. PAR, SRB
7. Precipitation

(B) Oceanosphere

1. Pigment Concentration
2. Seston Concentration
3. Dissolved Organic Matter Concentration
4. Fluorescence
5. Photo-synthetic Activity, Primary Production
6. SST
7. Water Flow/Sea Ice Tracing by Ocean Color/SST

(C) Landsphere

1. Vegetation Classification
2. Land Use Classification
3. Biomass, Primary Production
4. Biomass Burning and Slashing
5. Deforestation, Change in Land Use
6. Chlorophyll Concentration
7. Plant Water Content, Plant Activity
8. Soil Organic Matter, Soil Iron Content
9. Land Surface Temperature
10. Methane Emission from swamps
11. Monitoring of Agricultural Production

(D) Cryosphere

1. Snow/Ice Area
2. Age, Contamination, Water Content
3. Sea Ice Watching
4. Watching of Snow-Vegetation Mixed Area
5. Watching of Permafrost Area
6. Snow/Ice Surface Temperature
7. Snow/Ice Albedo

Common problems for all the sub-teams

1. Cloud screening.
2. Atmospheric correction.
3. Updating physical parameters.
   a. Absorption coefficients
      gases: water vapor,
      water: 0.35-0.60 micron,
      ice: 2nm resolution (1/4 - 1/10 of GLI band resolution).
   b. Optical properties of sea-ice (thin layer in the initial stage).
   c. (P, T) dependence.
   d. Reflectivities, BDRF of land/ice-surfaces.
4. Climatologies of vegetation, ice/snow surface, aerosol, and planktons.
5. Non-spherical scattering.
6. Data archive architecture and alogirthms involving time-dependence.

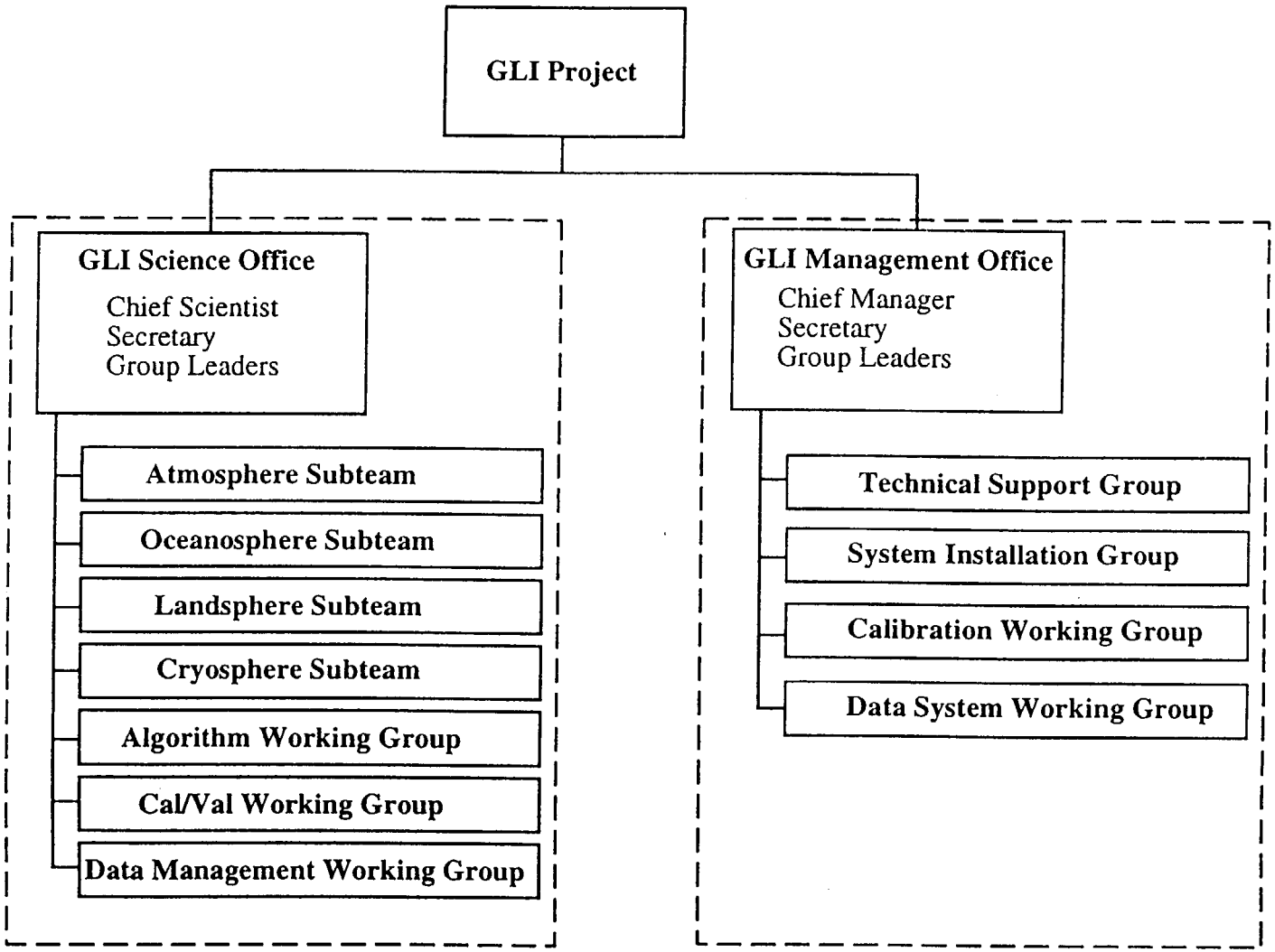
GLI Project
GLI Science Office
Chief Scientist
Secretary
Group Leaders
Atmosphere Subteam
Oceanosphere Subteam
Landsphere Subteam
Cryosphere Subteam
Algorithm Working Group
Cal/Val Working Group
Data Management Working Group
GLI Management Office
Chief Manager
Secretary
Group Leaders
Technical Support Group
System Installation Group
Calibration Working Group
Data System Working Group

POLDER

POLarization

Measurements include the polarization at selected wavelengths. The polarization helps to distinguish various scattering and reflection processes.

and **D**irectionality

The surface target is viewed from several (~ 10) directions.
Measurement of the reflectance angular variation.

of the **E**arth

Scientific objectives include the study of Atmospheric, Land and Oceanic processes.

Reflectances

The measurements are performed at selected wavelengths of the solar spectrum, in the visible and Near-Infrared spectral regions. No measurement in the thermal infrared region.

POLDER SPECTRAL AND POLARIZATION CHANNELS

Central wavelength (nm)	Band width (nm)	Polarization	Overall dynamic range	Mission Driver
443	20	no	0.05-0.22	Ocean colour
443	20	yes (3 angles/channels)	0.05 - 1.1	Aerosols, ERB
490	20	no	0.034 - 0.17	Ocean colour
565	20	no	0.019 - 0.11	Ocean colour
670	20	yes (3 angles/channels)	0.013 - 1.1	Vegetation, aerosols, ERB
763	10	no	0.007 - 1.1	Cloud top pressure
765	40	no	0.007 - 1.1	Aerosols
865	40	yes (3 angles/channels)	0.007 - 1.1	Vegetation, aerosols, ERB
910	20	no	0.007 - 1.1	Water vapour amount

POLDER PRIMARY FEATURES

• MASS :	32 KG
• VOLUME :	0.8 x 0.5 x 0.267 M^3
• POWER :	55 W (MAX)
• PIXEL CODING :	12 BITS
• DATA RATE :	882 KBITS / SECOND
• FIELD OF VIEW :	42° x 51°
	= 1800 KM (ALONG-TRACK)
	x 2400 KM (ACROSS-TRACK)

POLDER OBSERVATION CAPABILITY

TYPICAL OPERATION SEQUENCE

ALTERNATION OF "IMAGING" AND "STANDBY" MODES ON ONE ORBIT

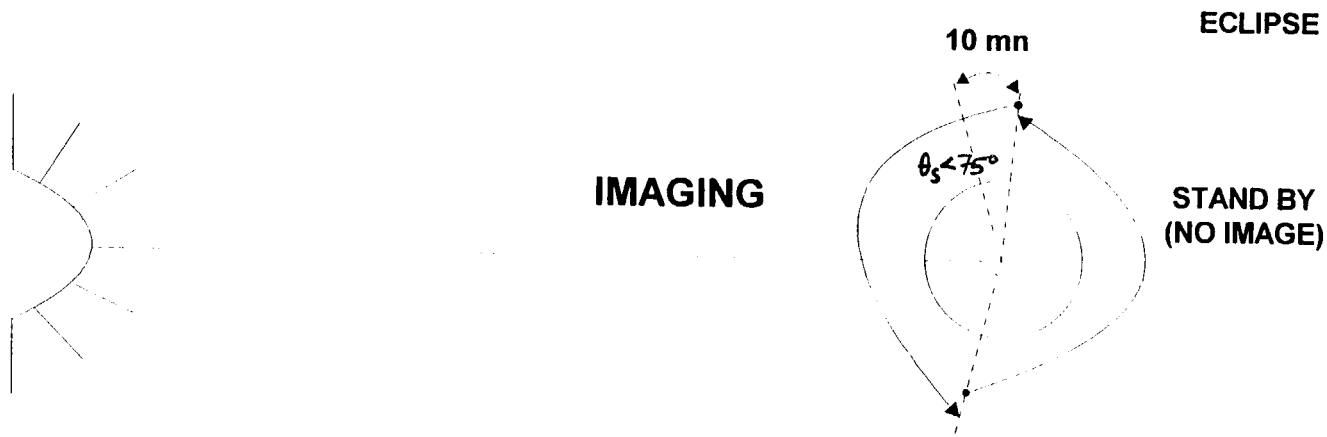

REPETITION OF THIS CYCLE ON SUCCESSIVE ORBITS

THIS OPERATION SEQUENCE COMBINED WITH THE WIDE FIELD OF VIEW OF THE INSTRUMENT ITSELF RESULTS IN A <u>GLOBAL DAILY COVERAGE</u>

POLDER INSTRUMENT VIEWING GEOMETRY

- **MAXIMUM FIELD OF VIEW : 114°**
- **MAXIMUM VIEW ANGLE (GROUND LEVEL) : 72°**
- **SCENE SIZE (ALONG TRACK) : 1825 KM**
  View angle (ground level) : 50°
- **SCENE SIZE (CROSS TRACK) : 2471 KM**
  View angle (ground level) : 60°
- **COVERAGE : GLOBAL DAILY**
- **PIXEL SIZE : 6 KM**
  Satifactory for global scale observations

POLDER Bidirectional Capabilities

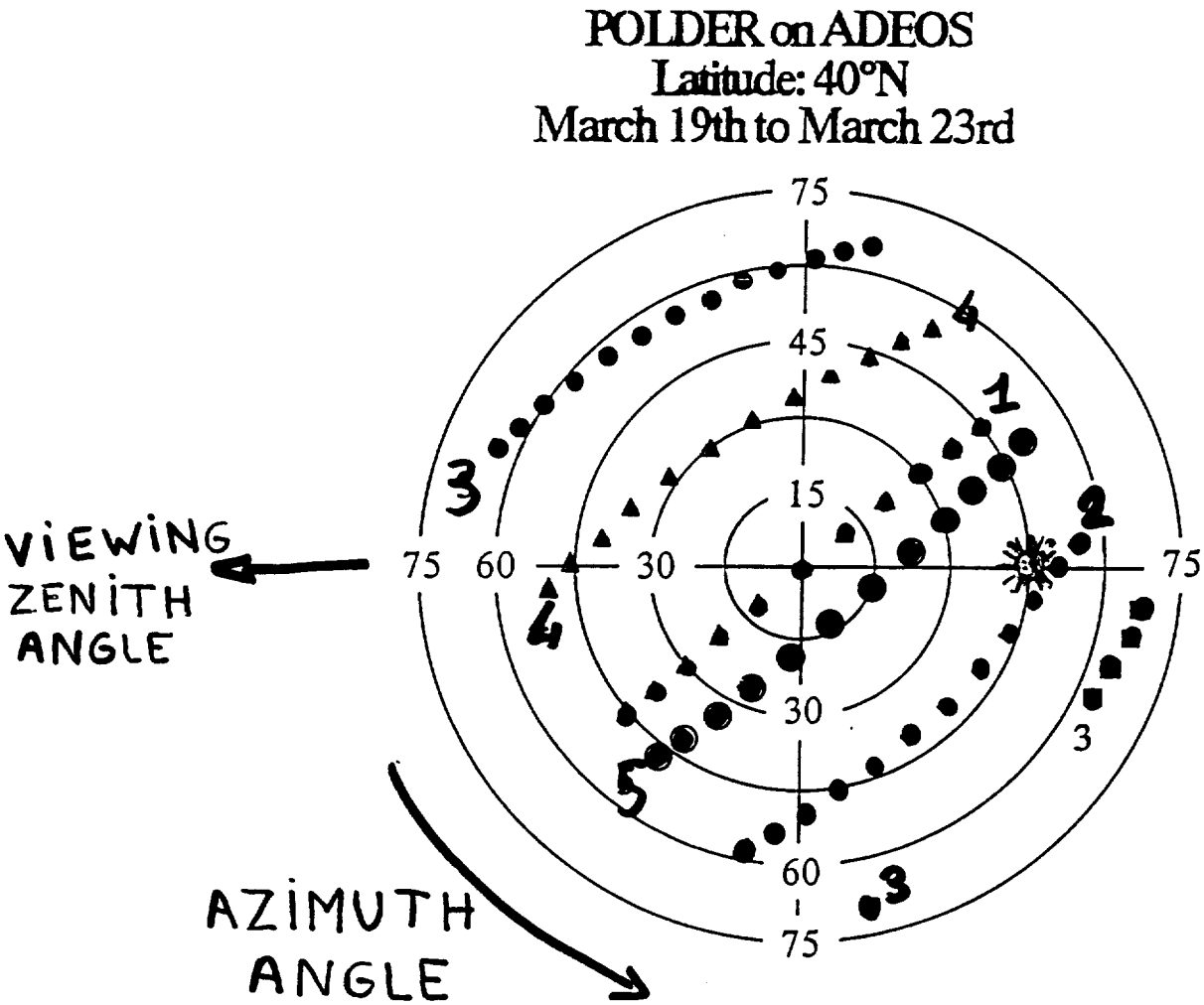

LOW DYNAMIC MODE AND HIGH DYNAMIC MODE

POLDER

PROBLEM : ACCOMODATION OF LARGE DYNAMIC RANGE (CLOUDS) AND HIGH RADIOMETRIC SENSITIVITY AT LOW SIGNAL LEVELS (OCEAN)

POLDER SOLUTION : SHORT AND LONG EXPOSURE TIMES ARE USED AND INTERLEAVED DURING POLDER OBSERVING SEQUENCE

SHORT EXPOSURE → HIGH DYNAMIC MODE
LONG EXPOSURE → LOW DYNAMIC MODE

CENTRAL WAVELENGTH (nm)	BAND WIDTH (nm)	HIGH DYNAMIC RANGE (HDM)	LOW DYNAMIC RANGE (LDM)	REMARK
443	20	0.05 - 1.1	---	For all 3 polarized channels
443	20	---	0.05 - 0.22	
490	20	---	0.034 - 0.17	
565	20	---	0.019 - 0.11	
670	20	0.1 - 1.1	0.013 - 0.25	For all 3 polarized channels
763	10	0.07 - 1.1	0.008 - 0.25	
765	40	0.07 - 1.1	0.008 - 0.25	
865	40	0.07 - 1.1	0.008 - 0.25	For all 3 polarized channels
910	20	0.1 - 1.1	0.007 - 0.25	

cnes

IMAGE SEQUENCING OF POLDER

A cycle (58.8 s in all) is composed of three subcycles of equal duration : one adapted to the low dynamic range (long exposure time) and two to the large dynamic range (short exposure time).
During each subcycle, the 16-image acquisition is performed during one filter wheel period.
No acquisition is performed during the following 3 periods.
Exposure and measurement transfers are performed during each image acquisition.

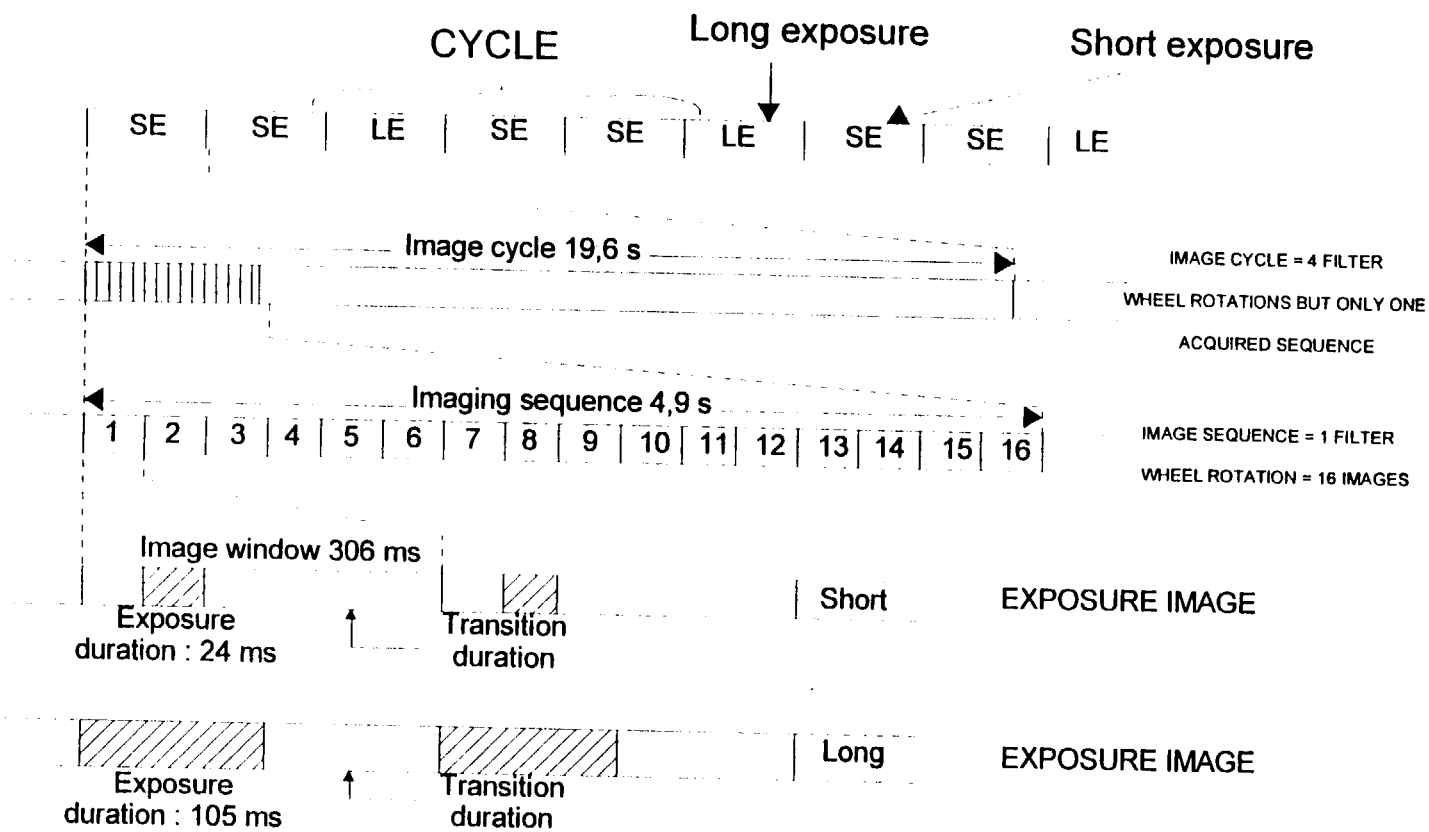

POLDER RADIOMETRIC PERFORMANCES

SIGNAL TO NOISE RATIO for a reflectance of 0.1 and sun at zenith

	443NP	443P	490NP	565NP	670P	763NP	765NP	865P	910NP
High Dynamic Mode Sequence	NA	189	NA	NA	196	149	196	196	188
Low Dynamic Mode Sequence	400	NA	500	714	500	385	476	476	357

ABSOLUTE CALIBRATION : 2% ($\lambda < 565$ nm) to 4% ($\lambda > 565$ nm)

INTERBAND CALIBRATION : 1%

POLDER DATA PRODUCTS CHARACTERISTICS

ALL PRODUCTS ARE GENERATED ON A UNIQUE, FIXED, GEOCODED PROJECTION GRID (EQUAL SINUSOIDAL PROJECTION)

LEVEL 1 :

- GEOCODED AND REGISTERED SPECTRAL NORMALIZED RADIANCES AND STOKES PARAMETERS CHARACTERIZING THE LINEAR POLARIZATION OF THE LIGHT (TOP OF ATMOSPHERE)
- SINGLE PASS PRODUCTS

BROWSE :

- SUBSAMPLED FROM LEVEL1 PRODUCT, WITH ONE SPECTRAL MEASUREMENT PER PIXEL

LEVEL 2 :

- GEOPHYSICAL PARAMETERS WITH ATMOSPHERIC CORRECTIONS
- SINGLE PASS PARAMETERS
- SPLIT INTO THREE "PRODUCT LINES" OR RESEARCH TOPICS, AND SEVERAL PRODUCTS PER LINE

LEVEL 3 :

- TIME AVERAGED GEOPHYSICAL PARAMETERS OBTAINED FROM SEVERAL SATELLITE PASSES (GLOBAL MAPS, TYPICAL TIME PERIOD FOR AVERAGING IS ONE MONTH)
- SPLIT INTO THE SAME THREE "PRODUCT LINES"

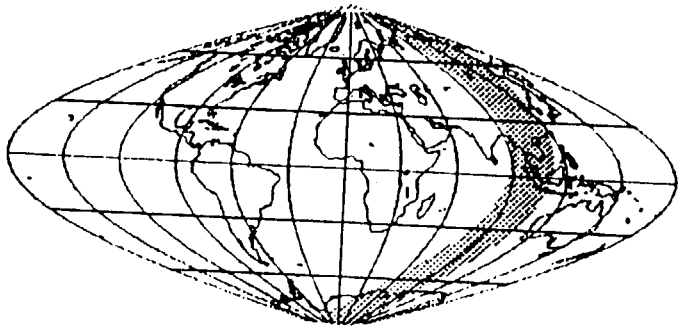

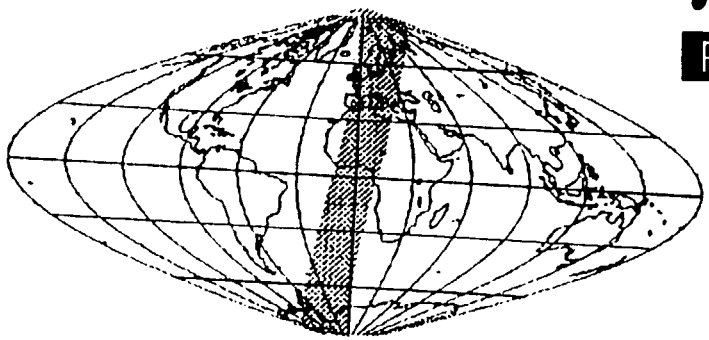

Examples of POLDER Data Segments over Asia (left) and Europe (right)

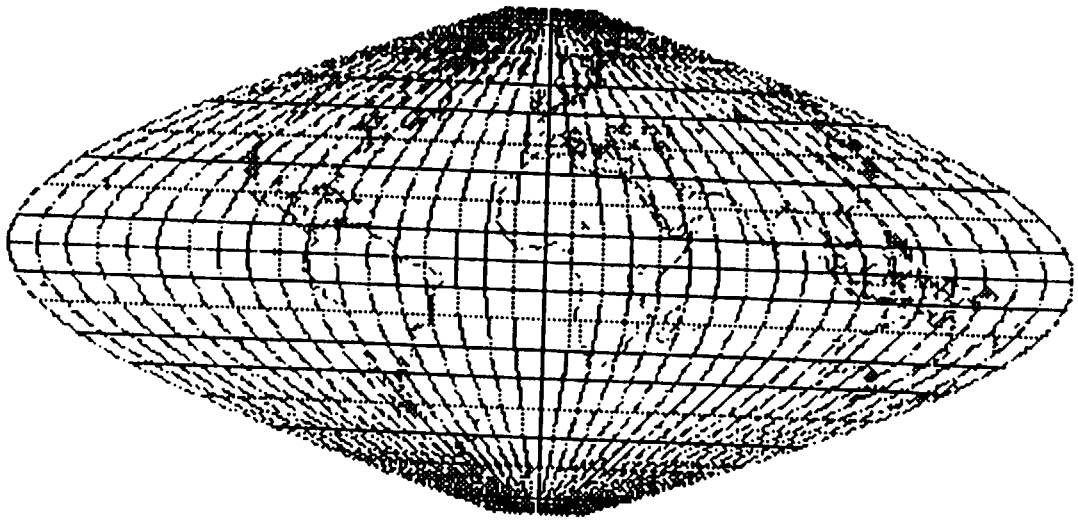

The POLDER Global Earth Grid

POLDER STANDARD PRODUCT DEFINITION

PRODUCT LEVEL	PRODUCT LINE	GENERIC CODE	COVERAGE /frequency	RESOLUTION (pixel x pixel) 1 pixel=6.17x6.17 km	MEDIA for global distribution**	PRODUCT SIZE ESTIMATION (Mbyte)
1		1	single pass •	1 x 1	DLT*	850
browse		browse	single pass •	5 x 5	CD-ROM	0.6
2	radiation budget, and clouds	non directional parameters	single pass •	9 x 9	CD-ROM*	2
		directional parameters	single pass •	9 x 9	CD-ROM*	6
		distributions	single pass •	9 x 9	CD-ROM*	2.5
	ocean colour and aerosols over ocean	directional parameters	single pass •	1 x 1	DLT*	85
		ocean colour parameters	single pass •	1 x 1	CD-ROM*	9
		aerosol parameters	single pass •	3 x 3	CD-ROM*	1.5
	land surfaces and aerosols over land	directional parameters	single pass •	1 x 1	DLT*	35
		water vapour and aerosol parameters	single pass •	3 x 3	CD-ROM*	0.5
3	radiation budget and clouds	radiation budget and clouds	global	9 x 9	CD-ROM	60
	ocean colour and aerosols over ocean	ocean colour parameters	global	1 x 1	CD-ROM	440
		aerosol parameters	global	3 x 3	CD-ROM	60
	land surfaces and aerosols over land	albedo and NDVI parameters	global	1 x 1	CD-ROM	110
		directional signature parameters	global	1 x 1	CD-ROM	250
		atmospheric parameters	global	3 x 3	CD-ROM	20

* Data subsets can be provided either on DLT or on EXABYTE

** All datasets for one product type during a given period (subscribing capability)

• single pass : 1 product per orbit (14 products/day)

Ocean Color Processing Line

Level 2 products

- Aerosol optical thickness
- Aerosol model description
- Water leaving radiances (directional)
- Ocean spectral reflectance (Corrected for directional effects)
- Chlorophyll pigments concentration
- Water turbidity index
- *Other parameters to assess the quality of the products*

Level 3 Products

- Aerosol optical thickness distribution
- Statistics on the Chlorophyll pigment concentration

DATA DISTRIBUTION

SCHEDULE AND ORGANIZATION

T0:	LAUNCH DATE
T0 to T0 + 3 MONTHS:	COMMISIONNING PHASE
T0 + 3 to T0+ 6 MONTHS:	CALIBRATION PHASE >> IN-FLIGHT ACCEPTANCE REVIEW
T0 + 6 MONTHS:	***DISTRIBUTION OF LEVEL 1 DATA***
	START OF THE VALIDATION PHASE
	ASAP ***DISTRIBUTION OF LIMITED SETS OF NON-VALIDATED/INTERIM PRODUCTS TO POLDER PIs***.
T0 + 12 MONTHS:	CAL/VAL ACCEPTANCE REVIEW
	Start of the ***DISTRIBUTION OF POLDER PRODUCTS TO ALL USERS***

DATA DISTRIBUTION

STANDARD PRODUCT PRODUCTION PHASE

DATA PRODUCTS DISTRIBUTED BY POLDER AND ADEOS GROUND SEGMENTS

- EXCLUSIVELY FOR PEACEFUL PURPOSES
- WITHOUT EXCLUSIVE USE:
  - free of charge for PIs
  - at no more that the price of filling the request for others users

LICENSE FOR USE

- PROTECTS CNES AND NASDA AGAINST
  - distribution of POLDER data by third parties
  - uses others than those for which they were requested

POLDER Calibration Plan

No on-board Calibration Device

Complexity due to

- Bidimensional Field of View
- Polarization Capabilities
- Calibration accuracy requirements

Pre-flight calibration

- All coefficients of the radiometric model (integrating sphere)

In-flight calibration on specific targets

• Absolute	=> Rayleigh Scattering	2-4 %
• Inter band	=> Glitter	2 %
• Polarization	=> Glitter	1-2 %
• CCD pixels Hight Frequency	=> Cloud reflectance statistics	0.4 %
• CCD pixels Low frequency	=> Desert targets	3 %

POLDER Validation Plan

Definition

List of product analyses which need to be performed before the POLDER products can be distributed to all interested investigators.

The validation plan includes :

- Consistency checks (Order of magnitude, temporal variation)
- Comparison with other satellite products
  - ISCCP
  - SeaWifs / OCTS
  - GOME
- Comparison with numerical weather model products
- Comparison with surface measurements.
- Comparison with airborne POLDER measurements

Sunphotometer deployment

A major objective of POLDER is the measurement of aerosol optical effects both for aerosol monitoring and for atmospheric effect correction

herefore:

The validation plan stresses the **importance of atmospheric optical measurements** in order to validate POLDER aerosol products.

⇨ Deployment of ≈10 automatic sunphotometers

- 5 over land
- 5 on small islands

These allow the measurement of :

- Aerosol optical thickness
- Aerosol phase function
- Aerosol polarization phase function

Other operational measurements of aerosol optical thickness can also be used for the validation of POLDER derived optical thicknesses.

POLDER PROJECT/PROGRAMME STATUS :

INSTRUMENT

TEST MODEL DELIVERED TO NASDA	AUG. 17TH, 94
INTEGRATED ON ADEOS P/F, ADEOS SYSTEM TESTS	
DELIVERY OF THE FLIGHT MODEL	MAY 15TH
UPGRADING OF THE TEST MODEL (SPARE MODEL)	JUNE/SEPTEMBER

GROUND SEGMENT

POLDER PROCESSING CENTER	UNDER DEVELOPMENT
ITT FOR THE "IMAGE QUALITY SYSTEM"	JANUARY
ITT FOR THE LEVEL 2 AND 3 PROCESSING LINES DEVELOPMENT	MARCH
DETAILED VALIDATION PLAN	JUNE

SCIENCE

INTERNATIONAL POLDER SCIENCE WORKING TEAM (IPSWT) OF 32 PIS	
FIRST MEETING OF IPSWT	KYOTO, DEC. 94

POLDER ON ADEOS 2 : TO BE DECIDED IN MARCH 95

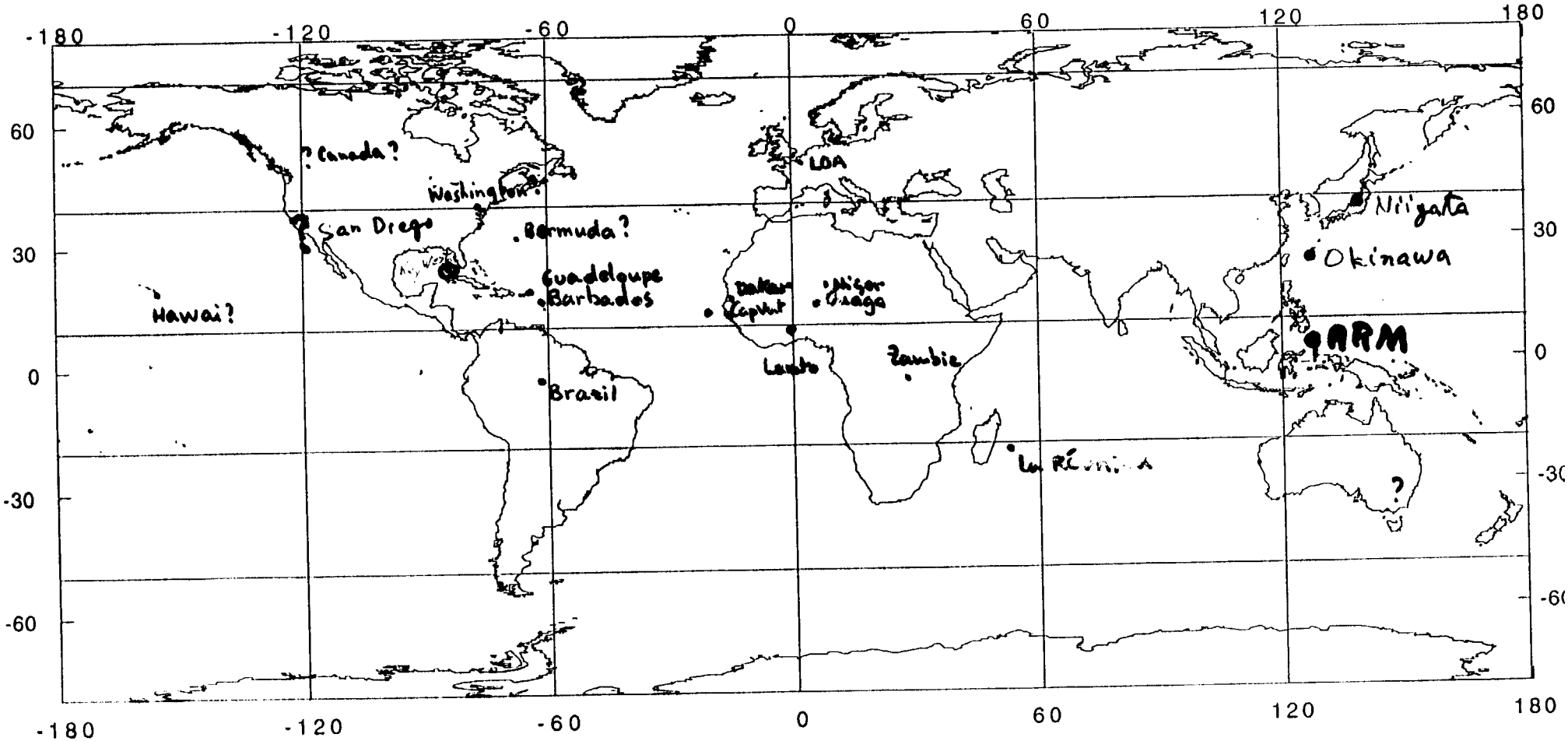

View from space
Equidistant Cylindrical Projection

CIMEL SUNPHOTOMETER NETWORK

- POLDER dedicated
- PHOTONS network
- Japanese PREDE Aureolometer
- Gordon/Voss (FIMS)

The ESA MEdium Resolution Imaging Spectrometer
MERIS

MERIS Mission Overview - G.Pittella ESA/ESRIN

MERIS Cal/Val - R.Doerffer GKSS, Germany

ENVISAT-1 Mission for MERIS

-MERIS is a passive, optical Earth remote sensing imager
with the primary goal to contribute to Ocean Colour Observations.

-As a moderate spatial resolution, wide swath sensor, MERIS will
provide inputs to global climatological and ecosystem models on a long term
basis. In order to satisfy the mission goals, a long lifetime plus
a stable performance of the sensor have to be ensured

The MERIS Mission Goals

Primary Mission Goals:
- Biooptical oceanography: Assessment of ocean surface optical properties and water
constituents, leading to phytoplancton biomass and productivity estimates via
measurements of various pigment concentrations.

Secondary Mission Goals:
-Atmospheric monitoring: Investigations of cloud and aerosol parameters namely
cloud top height, water vapour content, aerosol load.

-Land surface processes: Global scale monitoring of vegetation, assessment of
distribution and condition.

The MERIS Ocean Applications

The principal applications for MERIS data in the study of the upper layers of
the ocean are:

-The measurement of the photosyntetic potential by detection of
phytoplancton (algae)
-The detection of yellow substance (dissolved organic material)
-The detection of suspended matter (re-suspended or river borne sediments)

MERIS is driven by scientific requirements to monitor open ocean waters

---

MERIS preformances

Field ov View: 68.5 deg
Spatial res.: 1040x1200 m low
260x300 m high
Spectral bands: 15 bands programmable (fixed before launch)
Spectral Range: 400-1050 nm
Spectral bandwidth: 1.25 nm - 30 nm
Dynamic Range: up to 100% equiv. reflectance

MERIS Coverage

- Global at 1200m resolution using on-board recorder and dump via direct link (at Kiruna(SW) Station) and via Data Relay Satellite (at Frascati (IT) Station)

- Regional (over Coastal Zones and Land areas) at 300 m resolution for a maximum of 20 min of data per orbit via real-time link (x-band to Kiruna and Fucino for European coverage and Ka-band through DRS to Frascati for the remaining coverage)

MERIS Data products

- Level 0 : Decommutated instrument data stream. Not for distribution.

- Level 1 : Calibrated TOA reflectances. Base archive product. Systematically processed.

- Level 2 : Geophysical product including Ocean, Atmosphere and Land paramters

All products will be generated for both High and Low resolution data with different level of
accuracy depending on the delivery type. Fast delivery will use predicted orbit and climatology,
Off-line will use restituted orbit and up-dated auxiliary data for atm. corrections.

- Browse : Colour composite, subsampled product generated globally from Low res data and
archived in compressed form.
Used to visualize cloud cover and to enable order handling.

MERIS Calibration/Validation

The MERIS spectral bands

15 out of the following list of 16 will be selected

n.	Band Center(nm)	Band width(nm)	Lmin	Lsat
1	410	10	ocean	land
2	445	10	ocean	land
3	490	10	ocean	land
4	520	10	ocean	land
5	560	10	ocean	land
6	620	10	ocean	land
7	665	10	ocean	land
8	681.25	7.5	ocean	land
9	705	10	ocean	ocean
10	753.75	7.5	land	cloud
11	760	2.5	land	cloud
12	765	5.0	land	cloud
13	775	12.5	land	cloud
14	855	10	land	land
15	865	10	ocean	ocean
16	900	10	land	land

Instrument calibration

On board calibration principle

MERIS is calibrated with respect to the sun

Radiometric Calibration:
Use of 3 Flat plate spectralon diffuser:1 prime standard
1 for tracing degradation
1 grey level for low level signal
Calibration hardware is implemented on a rotating disk

Dark Calibration: Use of shutter

Wavelenght Calibration: Use of Fraunhofer lines

Radiometric calibration will be computed on-board and down-loaded into the telemetry without beeing applied to raw data.

Vicarious calibration/validation

Plan under development, will depend on final product and algorithm definition.

The following are the present assumptions:

Level 1: Top of Atmosphere reflectances

Level 2: For Ocean: Lw, water leaving radiances
Phytoplancton pigment case I
Suspended Matter
Fluorescenece
for Atmoshere: Cloud opt. thickness
Water vapour
aerosol type, concentration
for Land: Surface reflectance
Vegetation indices

MERIS Science Organization

SAG (Scientific Advisory Group) ch. M.Rast - ESA/ESTEC

2 Subgroups:
DPAD (Data Products and Algorithm Development) ch. V.Barale - CEC/JRC
CAL/VAL ch. R.Doerfer - GKSS

With the guidance of ESA's Science Advisory Group the mission requirements and performance
parameters are being monitored. In parallel retrival algorithms and data clibration/validation
procedures are being developed.

In support of these activities several mission and science related studies are being initiated
to substantiate and further the Ground Segment aspects of the Mission.

MERIS end-to-end simulator

Announcement of opportunuty will be issued in 1996

Complementary activity in course:

ESA-CEC/JRC joint projects (OCEAN, OCTOPUS)
CEC MAST III and PICASSO projects.

Deutsche Forschungsanstalt für Luft- und Raumfahrt e.V.
Institut für Weltraumsensorik

Multisensor Ocean Color Workshop
University of Miami, Feb. 1995

"Spaceborne Imaging Spectrometers for Ocean Color Remote Sensing

MOS-PRIRODA and MOS-IRS"

Andreas Neumann

German Aerospace Research Establishment - DLR
Institute for Space Senor Technology
Department of Sensor Data Utilization

Rudower Chausse 5
12484 Berlin - Germany

Phone: (+4930) 69545 640, FAX: (+4930) 69545 642
e-mail: neumann@dvi.ws.ba.dlr.de

Deutsche Forschungsanstalt für Luft- und Raumfahrt e.V.
Institut für Weltraumsensorik

Space Segment

The Modular Optoelectronic Scanner MOS is a spaceborne imaging pushbroom spectrometer in the visible and near infrared range of optical spectra which was specially designed for remote sensing of the ocean-atmosphere system. It will be flown on two satellite missions to be launched in the end of 1995: the PRIRODA-module which is a dedicated remote sensing module for the Russian space station MIR and the Indian IRS-P3 spacecraft in a polar orbit. Both instruments are basicaly identical, the newer one rebuild for the IRS spacecraft has one additional channel in the SWIR at 1.6m.

PRIRODA is a multisensor mission with a broad variety of remote sensing sensors, such as synthetic aperture radar, microwave radiometers, spatial high resolution optical scanners, a LIDAR system and an infrared scanner. MOS within this payload provides spectral high resolution measurements in 17 channels with high radiometric accuracy.

On the IRS-P3 satellite MOS will operate together with the Indian Wide Field Scanner WiFS.

MOS follows a concept of a specialized instrument for remote sensing of the atmosphere-ocean system that has been tested with non-imaging spectrometers built by the Institute for Space Research in Berlin for several missions (MKS, MKS-M on Intercosmos-21, space stations Salyut-7 and MIR). It consists of two separate spectrometer blocks with medium spatial resolution and appropriate chosen spectral channels and high radiometric resolution and accuracy. The atmospheric spectrometer MOS-A provides 4 narrow channels in the O_2A-absorption band at ~760 nm to allow measurements that can be used to estimate the aerosoloptical thickness and stratospheric aerosols. It measures simultaneously with the bio-spectrometer MOS-B that has 13 channels of 10 nm width in the range from 408 to 1010 nm. MOS-IRS provides a 14th channel from the MOS-C camera in the SWIR for improved surface term and roughness estimation. Using the MOS-A measurements and the NIR-channels of MOS-B it is possible to remove the atmospheric influence from the VIS - MOS-B data and one can compute the water leaving radiance (reflectance) on the surface level. The advantage of the O_2A-method is to provide additional measurements on aerosol content and profile.

The center wavelengths of the MOS-B channels are chosen in accordance with the spectral characteristics of ocean and coastal zones and appropriate to construct quantitative retrieval algorithms of different water constituents. They also give the opportunity of vegetation signature determination (red edge) and estimation of H_2O vapour content in the atmosphere from the NIR-measurements.

An overview on the instruments parameters is given in the tables.

Deutsche Forschungsanstalt für Luft- und Raumfahrt e.V.
Institut für Weltraumsensorik

Ground Truth Instruments

The importance of ground truth measurements for methodical validation of spaceborne sensors as well as for interpretation algorithms is evident. Therefore at DLR centre Berlin were built several ground instruments: a multichannel spectrometer MKS-BS providing 13 discrete measurement channels at the MOS-B wavelengths, and three High Resolution Environment Spectrometers HiRES. The HiRES-B with 0.3 nm spectral resolution is used for atmospheric transmission measurements in the O2-bands and chlorophyll fluorescence, HiRES-E and -ES with broader channels but extended wavelength range (400-800 nm) serve for measurements of spectral signatures of different remote sensing objects. Main parameters of the HiRES spectrometers are given in the table.

The following parameters can be measured:

- upwelling radiance
- global irradiance
- object reflectance
- atmospheric transmission

High Resolution Environment Spectrometers

	HiRES-B	HiRES-E	HiRES-ES
optical principle	Rowland-circle mounting, holographic concave reflective grating		
spectral range [nm]	650 - 780	400 - 800	400 - 800
max. selectable channels	430	50	200
spectral halfwidth [nm]	0.3	8.0	2.0
sensor	CCD Line	CCD-Line	CCD Line
A/D converter	16 bit		
dark value noise	<30 electrons at basic integrationtime		
integration time	20 ms - 10 s, adjustable		
max. sampling frequency	184 Hz		
field of view	1°, 22°, 180° (irradiance)		

measured parameters	radiance, reflectance, transmittance, irradiance (nadir, sky, global, sun)

Laboratory Calibration

The spaceborne sensor and the ground truth spectrometers are calibrated on laboratory radiance sources (spheres and lamps) available at the Institute for Space Sensor Technology. The sources are calibrated to the standards of the PTB (Physikalisch-Technische Bundesanstalt). The following parameters are measured and documented during laboratory calibration:

- DNSU, PRNU
- spectral alignment and calibration (,)
- spatial alignment and calibration (FOV, MTF)
- polarization sensitivity
- linearity, straylight
- temperature dependence
- absolute sensitivity (spatial and spectral)

In 1994 measurements on the comparision of DLR standard sources and SeaWiFS laboratory calibration standard at GSFC were made. The results showed quite significant deviations between the used radiation standards.

In-Flight Calibration

During flight are performed control measurements using internal reference lamps (each data take) and absolute sun calibration measurements via a diffuser in front of the entrance optics. This allows to perform:

- DSNU, PRNU
- absolute sensitivity calibration
- linearity control
- spectral alignment control

The sun-calibration is performed by cosmonaut action on PRIRODA and by command during terminator crossing on IRS.

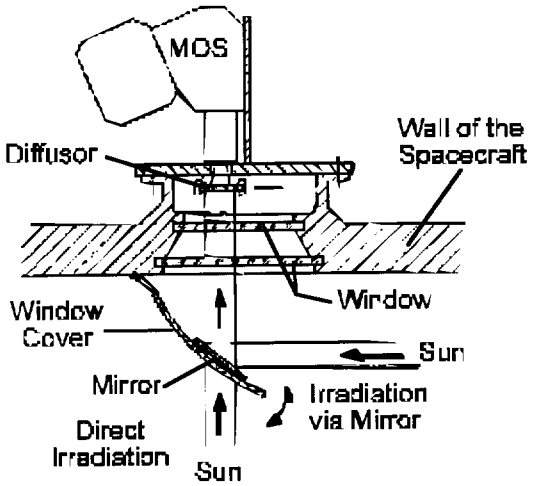

Principle of Direct an Indirect Sun Calibration (PRIRODA)

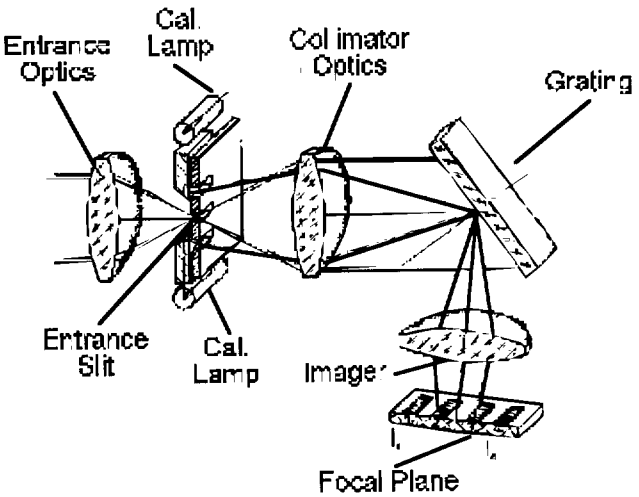

Principle of Internal Control by Calibration Lamps

Deutsche Forschungsanstalt für Luft- und Raumfahrt e.V.
Institut für Weltraumsensorik

DLR

Deutsche Forschungsanstalt für Luft- und Raumfahrt e.V.
Institut für Weltraumsensorik

Proposed Experiments SeaWiFS - MOS

Both SeaWiFS and MOS instruments will be operating in orbit at the same time (PRIRODA: 1996-1997, IRS-P3: 1996-1998). Because of the similarities in the mission goals (although MOS is a scientific experiment, not yet an operational device) there are proposed experiments for joint data utilization adressing the following topics:

Cal/Val Experiments:

Both instruments will be calibrated against the same radiometric laboratory standard (intercalibration campaign at GSFC, March 1994). This preflight intercalibration gives the opportunity of in-flight calibration intercomparisions:

- synchroneous data acquisition over designated test areas, including ground truth measurements, comparision and radiometric matching of the data (concrete areas tbd.)
- comparision of calibration results from in-orbit sun calibrations
- correction of the influence of the O_2A-absorber band in SeaWiFS channel 7 using MOS-A data
- in-orbit instrument parameter validation (accuracy, stability, noise, ...)

Ocean Algorithm Validation

Both instruments were optimized for ocean remote sensing. Compared to SeaWiFS MOS provides more spectral channels and higher spectral resolution. The spatial resolution is similar (using SeaWiFS LAC data):

- comparision of spectral information content, especially for coastal zones and turbid waters
- experimental validation of parameter retrieval algorithms for MOS, comparision of results to SeaWiFS, conclusion on suitability of instrument parameters and possible algorithm improvement using higher spectral resolution data from space
- joint ground truth campaigns within the frames of the SeaWiFS, PRIRODA and IRS-P3 programs, exchange of both space and ground data between the projects

Atmospheric Correction Problems

With the NIR channels up to 1.01 mm, the 1.6 m channel at MOS-IRS and the measurements in the Oxygen-absorber band MOS provides additional experimental data for the improvement of atmospheric correction of remote sensing data. It is proposed to validate algorithms on

- inversion techniques for correction on atmospheric state, polarization and surface roughness
- radiative transfer modell validation

MOS Data Availability

a) PRIRODA

The PRIRODA program is an open international research program with participants from several CIS and European countries and the USA. For MOS-PRIRODA receiving stations and data base systems are established in Moscow (RKK Energia, Institute for Radioengineering & Electronics RAS) and Neustrelitz, Germany, at the German Remote Sensing Data Centre DFD. Data will be available at copy costs for participants of the PRIRODA program via the PRIRODA User Data Centres.

US participants within the NASA part (among others):

- NASA HQ (Atmospheric Chemistry)
- NASA Goddard Space Flight Centre (Microwave Radiometer Calibration)
- NASA HQ / USF (Ocean Color)

b) IRS-P3

IRS-P3 will be launched with the third test launch of the Indian Polar Satellite Launch Vehicle PSLV. The satellite payload is financed within the frames of bilateral German - Indian agreement on scientific cooperation. The mission will be a pre-operational one. Up to now the following agreement exists on data policy:

- basicaly IRS-P3 is a scientific mission
- during the instrument validation phase (first three months after launch) data will be available to ISRO and DLR science teams only.
- after successful validation phase data shall be made available to a broader public (either at copy costs for scientific purposes or on comercial basis), DLR and ISRO will distribute a corresponding call for proposals to the user community.

Deutsche Forschungsanstalt für Luft- und Raumfahrt e.V.
Institut für Weltraumsensorik

MOS Data Products

Level 1:

For both missions several data products will be made available. The basic approach is to provide Level-1 calibrated TOA radiance data, i.e. for both spectrometers scenes containing all channels radiometrically corrected and calibrated, 16 bit per pixel, band interleaved by line plus a header containing information on:

- orbit number, reference to board time, operational modes
- UTC time referencing
- georeferencing (corner pixels, North and South direction)
- sun zenith and azimuth angles
- reference to raw data and calibration files
- minimum and maximum values for each channels
- classification map land/water/clouds

Higher Level Products:

Since both PRIRODA and IRS are mainly scientific missions up to now there is no final decision on the delivery of "standard" value added products for MOS. However, the MOS instrument team proposes to provide some basic products using simple processing algorithms. Actually the following parameters are considered:

- water-leaving radiance $L_W()$ for channels 1 to 8 of MOS-B (408 - 685 nm)
- water-leaving reflectance $R_W()$ for channels 1 to 8 of MOS-B (408 - 685 nm)
- aerosoloptical thickness $_A$, probably for 750 nm
- Angstroem-coefficient for extrapolation of $_A$
- "CZCS"-pigment
- normalized vegetation index NDVI

Deutsche Forschungsanstalt für Luft- und Raumfahrt e.V.
Institut für Weltraumsensorik

Detailed information on data formats and used processing algorithms are available from the MOS intrument team.

Deutsche Forschungsanstalt für Luft- und Raumfahrt e.V.
Institut für Weltraumsensorik

Modular Optoelectronic Scanners MOS (Overview)

	MOS-PRIRODA	MOS-IRS
optical principle	pushbroom imaging spectrometer	pushbroom imaging spectrometer + CCD line camera
spectral range	408 - 1010 nm	408 - 1010 nm, 1.6 mm
number of channels	17	18
spectral halfwidth	1.4 nm, 10 nm	1.4 nm, 10 nm, 100 nm
sensor	CCD Line-array	CCD Line-array
swath width	85 km	~200 km
pixel size	650 m	500 m
DL/L	<1% (VIS/NIR), 2% (SWIR)	<1% (VIS/NIR), 2% (SWIR)
quantization	12 bit	16 bit
in-flight calibration	internal lamps, sun calibration	

DLR

Deutsche Forschungsanstalt für Luft- und Raumfahrt e.V.
Institut für Weltraumsensorik

Modular Optical Scanner MOS-PRIRODA

Parameter	MOS-A	MOS-B
Spectral Range [nm]	755 - 768	408 - 1010
No. of Channels	4	13
Wavelengths [nm]	756.7; 760.6; 763.5; 766.4 O_2A-band	408; 443; 485; 520; 570; 615; 650; 685; 750; 870; 1010 815; 945 (H_2O-vapor)
spectral halfwidth [nm]	1.4	10
FOV along track x [deg] across track [deg]	0.343 13.6	0.1 13.3
Swath Width [km]	82	80
No. of Pixels	29	128
Pixel Size x*y [km^2]	2.87x2.87	0.7x0.65
Measuring Range L_{min} .. L_{max} [$Wcm^{-2}nm^{-1}sr^{-1}$]	0.1 .. 40	0.2 .. 65
L/L [%]	0.3	1.0

Modular Optical Scanner MOS-IRS

Parameter	MOS-A	MOS-B	MOS-C
Spectral Range [nm]	755 - 768	408 - 1010	SWIR
No. of Channels	4	13	1
Wavelengths [nm]	756.7; 760.6; 763.5; 766.4 O_2A-band	408; 443; 485; 520; 570; 615; 650; 685; 750; 870; 1010 815; 945 (H_2O-vapor)	1600
spectral halfwidth [nm]	1.4	10	100

FOV along track x [deg] across track [deg]	0.344 13.6	0.094 14.0	0.14 13.4
Swath Width [km]	195	200	192
No. of Pixels	140	384	299
Pixel Size x*y [km^2]	1.57x1.4	0.52x0.52	0.52x0.64
Measuring Range L_{min} .. L_{max} [$Wcm^{-2}nm^{-1}sr^{-1}$]	0.1 .. 40	0.2 .. 65	0.5 .. 18
L/L [%]	0.3	1.0	2.0

Deutsche Forschungsanstalt für Luft- und Raumfahrt e.V.
Institut für Weltraumsensorik

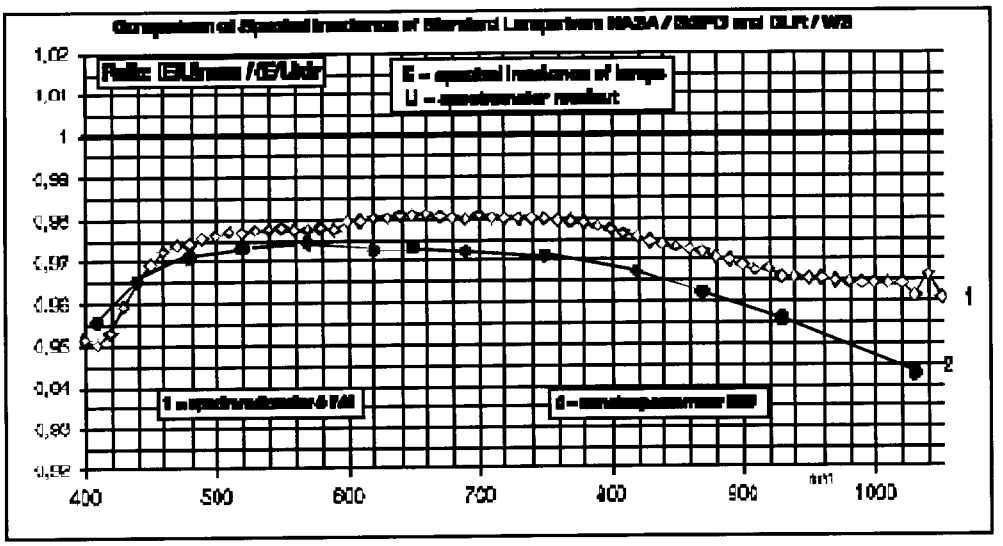

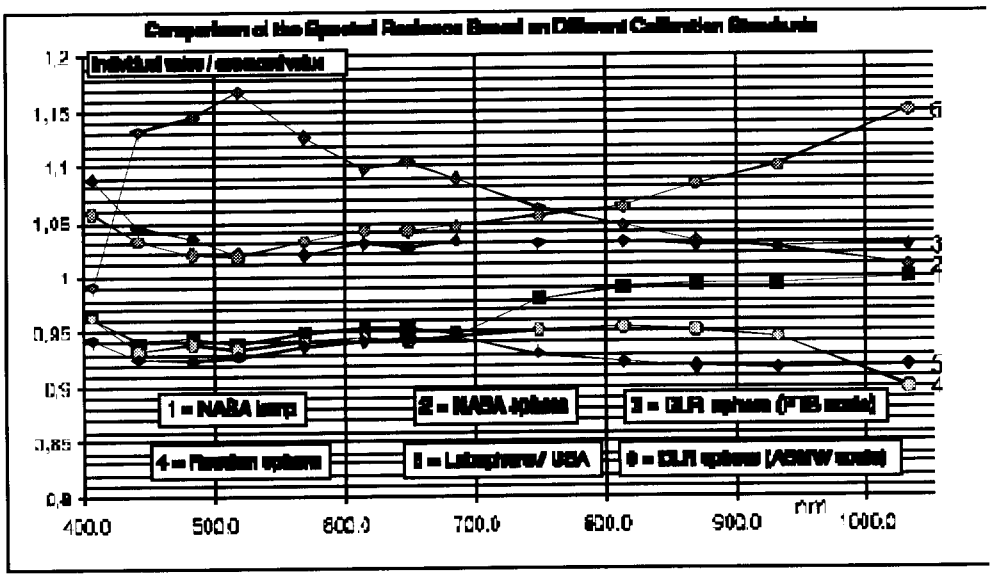

Comparision of DLR and GSFC Radiance Standards

MIAMI.DOC

DLR

Deutsche Forschungsanstalt für Luft- und Raumfahrt e.V.
Institut für Weltraumsensorik

DLR

Deutsche Forschungsanstalt für Luft- und Raumfahrt e.V.
Institut für Weltraumsensorik

MOS scene 82x82 km² (Orbit height 350 km / MIR-Station)
containing 32 swaths MOS-A (=32 subscenes)
and 128 swaths MOS-B

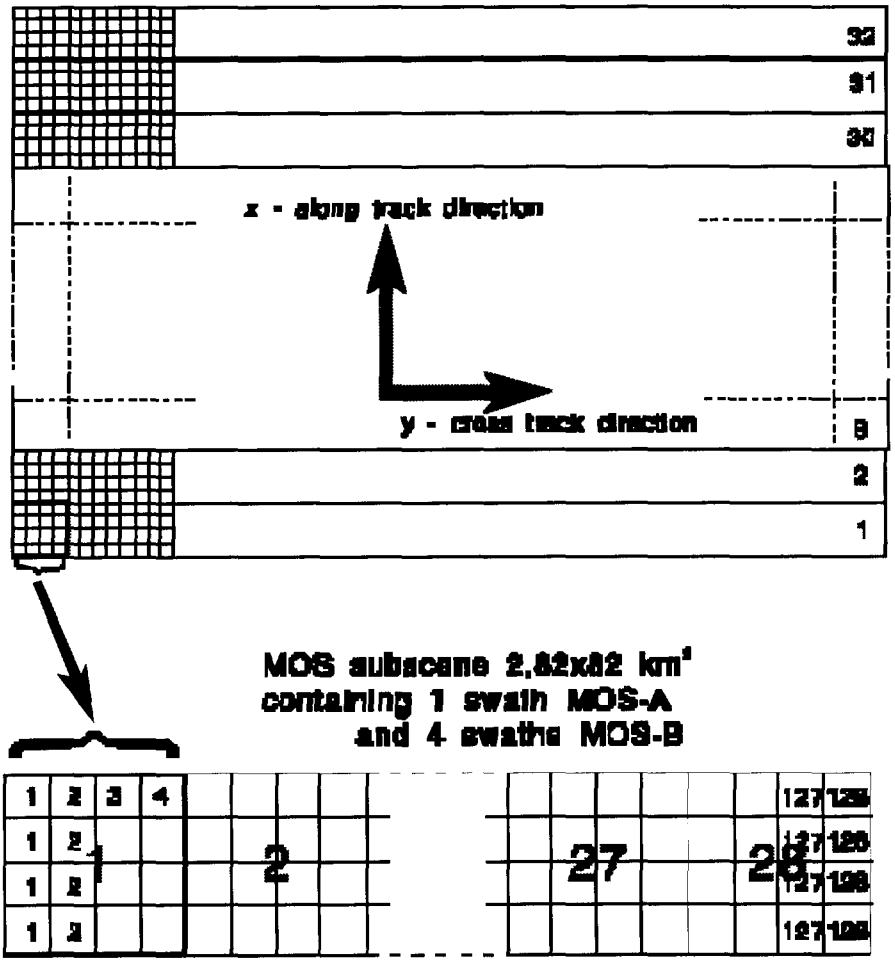

1, 2, ... MOS-A pixels, measured in 4 wavelengths

1, 2, ... MOS-B pixels, measured in 13 wavelengths

Scene Geometry MOS-PRIRODA

DLR

MOS scene 200x200 km2 (Orbit height 820 km IRS-P3)
containing 128 swaths MOS-A (=128 subscenes)
and 384 swaths MOS-B/-C

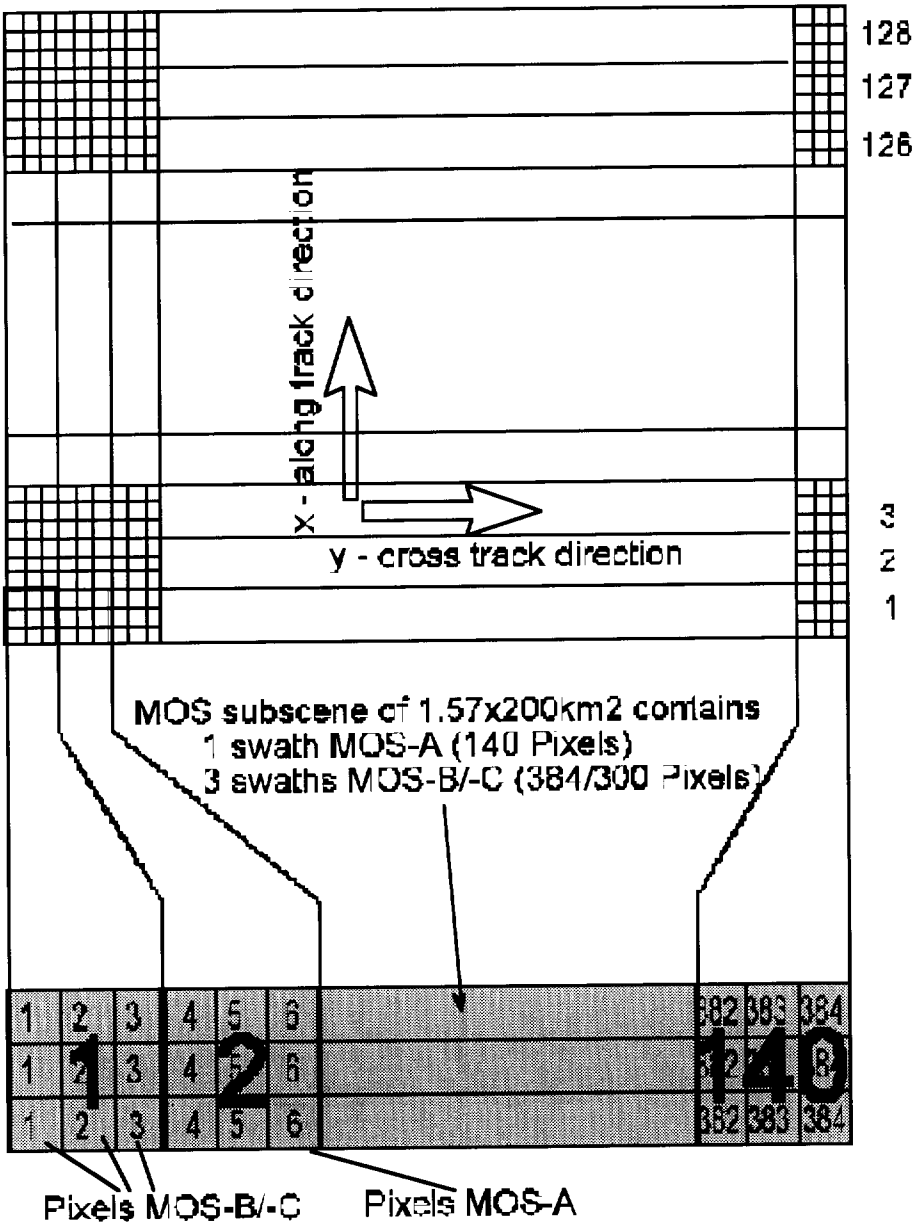

Deutsche Forschungsanstalt für Luft- und Raumfahrt e.V.
Institut für Weltraumsensorik

Scene Geometry MOS-IRS

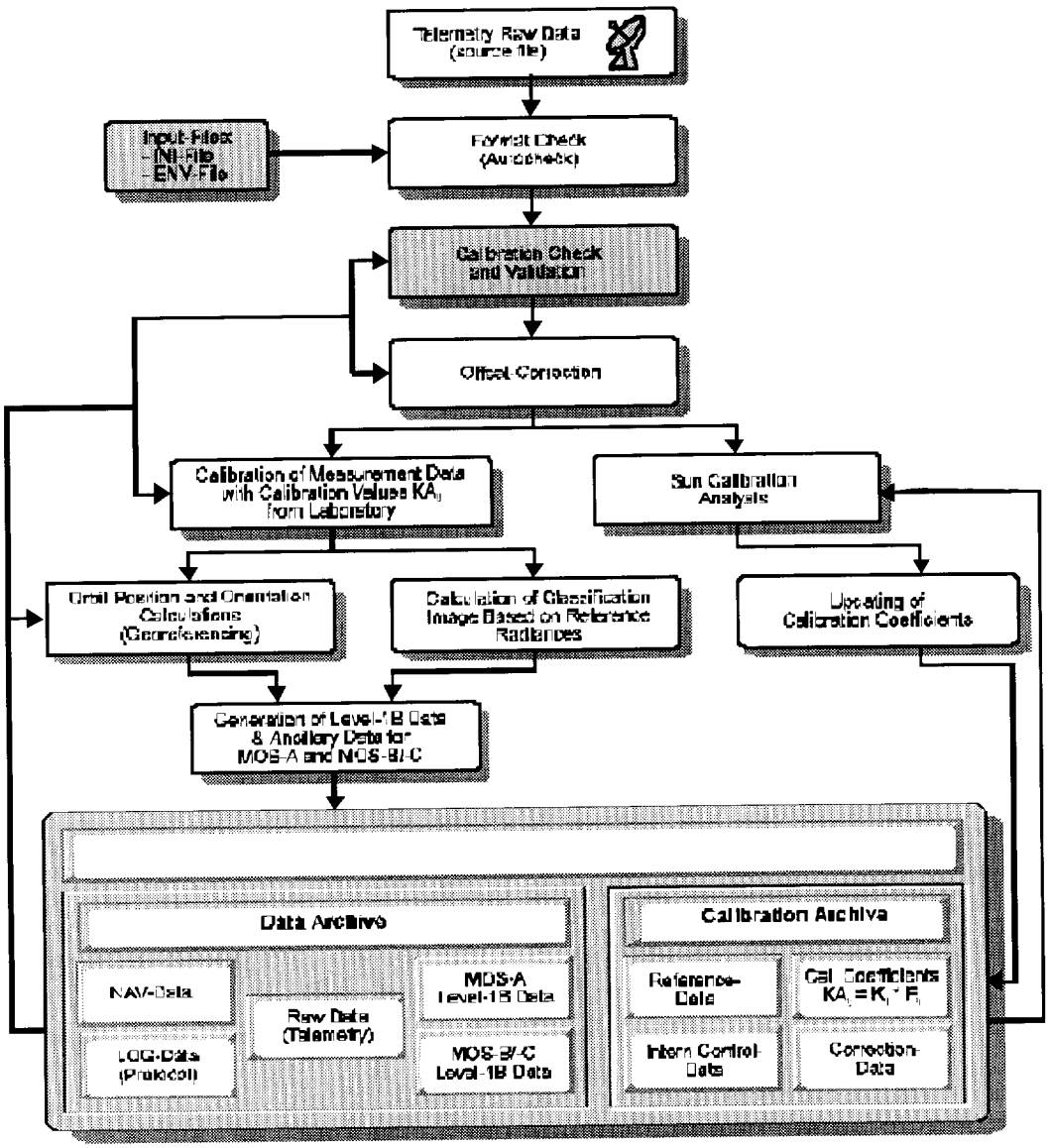

MOS Primary Processing

DLR

Deutsche Forschungsanstalt für Luft- und Raumfahrt e.V.
Institut für Weltraumsensorik

Instrument Status

MOS-PRIRODA:

- flight unit delivered to RKK ENERGIA in 1994
- exchange of recalibrated optics blocks and calibration unit in March '95
- final tests finished till September '95
- actual launch date: 12th December '95
- first data available: March '96

MOS-IRS P3:

- optics/electronics actually under construction
- expected delivery to ISRO September '95
- launch date: last quarter '95
- data avilable: 2nd quarter '96 (open to community)

DLR

Deutsche Forschungsanstalt für Luft- und Raumfahrt e.V.
Institut für Weltraumsensorik

Points of contact at DLR Institute for Space Sensor Technology:

- to get the institute dial (+4930) 695 45 plus 3 digits extension as shown below
- FAX (valid for all, please write name at the top) extension 642

Instrument PI of MOS-PRIRODA and MOS-IRS, Coordinator of German Science Program:

Prof. Dr. Gerhard Zimmermann	Phone:	669
	e-mail:	neumann@dvi.ws.ba.dlr.de

Calibration (laboratory and in-flight):

Dr. Karl-Heinz Sümnich	Phone:	570
	e-mail:	ws2i@arzsp7.rz.ba.dlr.de
Dr. Horst Schwarzer	Phone:	584
	e-mail:	ws2h@arzsp7.rz.ba.dlr.de

Ocean algorithms, data processing, IRS-P3 Science Plan, MOS-SeaWiFS interaction:

Dr. Andreas Neumann	Phone:	640
	e-mail:	neumann@dvi.ws.ba.dlr.de
Harald Krawczyk	Phone:	652
	e-mail:	harald@dvi.ws.ba.dlr.de

Radiative transfer modeling, O2A-data utilization:

Dr. Bernd Piesik	Phone:	656
	e-mail:	piesik@dvi.ws.ba.dlr.de
Bringfried Pflug	Phone:	655
	e-mail:	pflug@dvi.ws.ba.dlr.de

COPY #

National Space Program Office
National Science Council, Executive Yuan
Republic of China

Request For Proposal
for
Ocean Color Imager
(OCI)

(RFP No:OCI 8312-RFP-001)

Launch 1998

NSPO
Science Based Industrial Park
Hsin-Chu, Taiwan, R.O.C.

December 2 , 1994

Section 1

Bidder's Instructions

1.1 General Instructions

The National Space Program Office , acting as the execution office authorized by N: Science Council ,the Executive Yuan , the Republic of China is pleased to solicit pro from the prospective sources for the implementation phase of the Ocean Color Imager payload, to be flown on the ROCSAT-1 satellite. OCI is one of three payload instru selected for this mission. The other two are the Ionospheric Plasma and Electrodyr Instrument (IPEI) and the Experimental Communication Payload (ECP).

Ocean color imager (or OCI) is a remote sensing payload instrument to be flc ROCSAT-1, a low inclination (35° inclined from equatorial plane) and low orbit (6 above the sea level) nadir pointing scientific satellite. The intended imaging period is b 9:00-15:00, local time of passage. This translates into about 25% of duty cycle. The imaging will be much less because of the limited downlink rate, cloud covers an factors.

one downlink/uplink site

· Could NASA help with downlink?

OCI's scientific missions are

- mapping the pigment distribution in the low latitude oceans and generating spect for various scientific studies,
- studying marine productivity and dynamics of meso-scale eddies,
- studying the influence of atmospheric aerosols on remote sensing.

The expected period of performance is 50 months (26 months plus two-year warranty

Table 2 Minimum Spectral Transmission Characteristics (also see Fig. 1)

spectral band	λ_c(nm)	$\Delta\lambda$(50%) nm	$\Delta\lambda$(80%) nm	$\Delta\lambda$(10%) nm	out of band rejection (see Fig. 1)
B1	443±3	20±3	> 14	<$\Delta\lambda$(50%)+10 nm	0.4 %
B2	490±4	20±3	> 14	<$\Delta\lambda$(50%)+10 nm	0.4 %
B3	510±4	20±3	> 14	<$\Delta\lambda$(50%)+10 nm	0.4 %
B4	555±4	20±3	> 14	<$\Delta\lambda$(50%)+10 nm	0.4 %
B5	670±4	20±3	> 14	<$\Delta\lambda$(50%)+10 nm	0.4 %
B6	865±5	40±4	> 34	<$\Delta\lambda$(50%)+20 nm	0.4 %

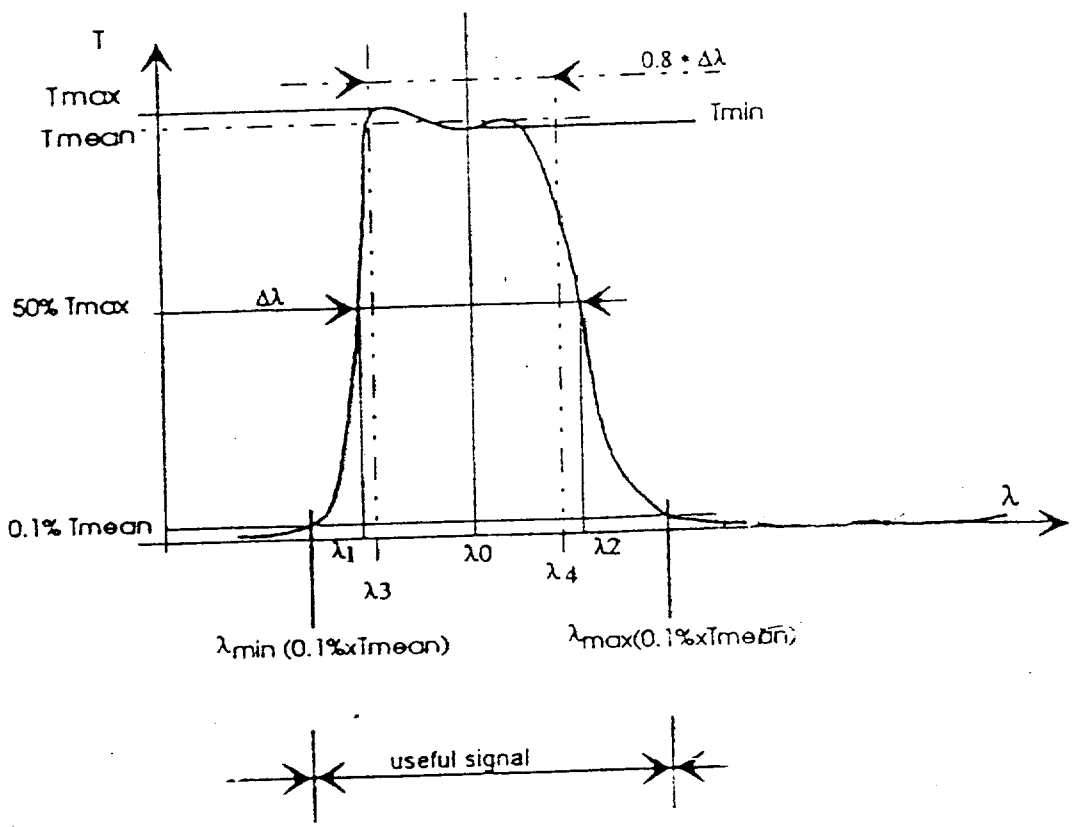

$$\text{Note : Rejection Ratio} = \frac{\int_{0.35\mu m}^{\lambda_{min}} T_{filter} R_{det} d\lambda + \int_{\lambda_{max}}^{1.1\mu m} T_{filter} R_{det} d\lambda}{\int_{0.35\mu m}^{1.1\mu m} T_{filter} R_{det} d\lambda}$$

R_{det} : Relative Spectral Responsivity of CCD : $T = T_{filter} R_{det}$

Fig. 1 Mimimum Spectral Characteristics

3.1 System Specification of the FM

The system specification for the FM is summarized in the following table.

Table 1 OCI FM System Specification

SPECIFICATION ITEM	REQUIREMENT					
Swath width	≥ 690 km @ 600 km					
Spatial resolution or IFOV @ 600 km altitude	800 m ± 20 m @ Nadir					
Signal digitization	minimum 10 bits; selectable gain of x1, x2 and x.5					
Spectral characteristics (system level)	B1	B2	B3	B4	B5	B6
Central wavelength(nm)	443	490	510	555	670	865
Tolerance of above(nm)	± 3	± 4	± 4	± 4	± 4	± 5
$\Delta\lambda$ @ 50% (nm)	20	20	20	20	20	40
Tolerance of above	± 3	± 3	± 3	± 3	± 3	± 4
Minimum SNR & MTF**	MTF @ BOL		SNR@ EOL			
	across track	along track	@ mean radiance*	mean radiance*	saturation radiance*	
B1	0.3	0.21	450	84.1	132.5	
B2	0.3	0.21	450	65.6	105	
B3	0.3	0.21	450	56.4	90.8	
B4	0.29	0.2	450	45.7	74.4	
B5	0.24	0.2	350	24.6	42	
B6	0.16	0.19	350	10.9	21.3	
Polarization sensitivity(goal)	≤ 2%					
Absolute radiometric accuracy	5 % or better at BOL					
Signal uniformity	+0/-35% at a uniform background					
Redundancy	channel B4 optics + CCD; Band 7					
Spectral Registration	all IFOV centroids within a circle of 1/3 IFOV					

Moving Parts	Not allowed
Reliability	≥ 0.90, 7 bands operating at the end of 2 years in orbit (+3% duty cycle)
Maximum envelope	volume ≤ 26 liters, envelope 30x30x35 cm (crosstrack x Nadir x velocity)
Mass	≤ 14 kg
Thermal design	self sufficient (see App IX for clear view factors)
Power	≤ 20 W during acquisition, ≤ 8 W standby. 28 ± 6V DC supply
Data Rate	< 750 kbps in mode FB via RS 422 (incl.CCSDS overhead)
Out of band Spectral rejection	0.4 % for all bands (see Table 2 & Fig. 1)

* radiance in W/(Sr-m^2 -um)

** The square wave MTF values which are measured at the Nyquist frequency apply to all pixels in a specific band.

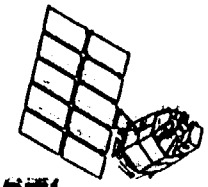

SSTI

HSI Requirements Summary

TRW

Parameter	Requirement	Capability
Altitude/Orbit	523 km, sun synch	Same
Ground Sample Distance (Nadir)	≤ 5 m, Pan/ ≤ 30 m, HS	Same
Swath Width	> 10 km Pan/> 5 km, HS	13.0 km/7.7 km
Spectral Response	0.48 - 0.75 μm Pan	Same
	0.4 - 2.5 μm HS	0.4 - 2.5
Spectral Resolution	< 10 nm	5 nm VNIR, 6 nm SWIR
Channel Banding	≥ 6 Landsat Bands	384 bands selectable
Boresight Knowledge	≤ 150 μradians, 1σ	135 μradians, 1σ
Pixel Timing Accuracy	≤ 2 msec	1 msec
Radiometric Accuracy	< 6%, 1σ, HS	Same
(Absolute)	< 16%, 1σ, Pan	Same
Pixel-Pixel Precision	< 2%, 1σ, HS	Same
(Relative)	< 4%, 1σ, Pan	Same
On-Orbit Calibration Drift	< 5%, 1σ, HS	Same
	< 15 %, Pan	Same
Quanitization	≥ 12 Bits HS	12 Bits
	≥ 8 Bits Pan	8 Bits
Signal-to-Noise Ratio	> 30, inband, 30% albedo	See Following Chart
Weight	≤ 21 kg	21 kg
Power	≤ 75 Watts, Avg	53 Watts, Avg
Lifetime	≥ 3 yrs	Same

SSTI

Signal-to-Noise Ratio
(30% Albedo, aggregated by 2)

TRW

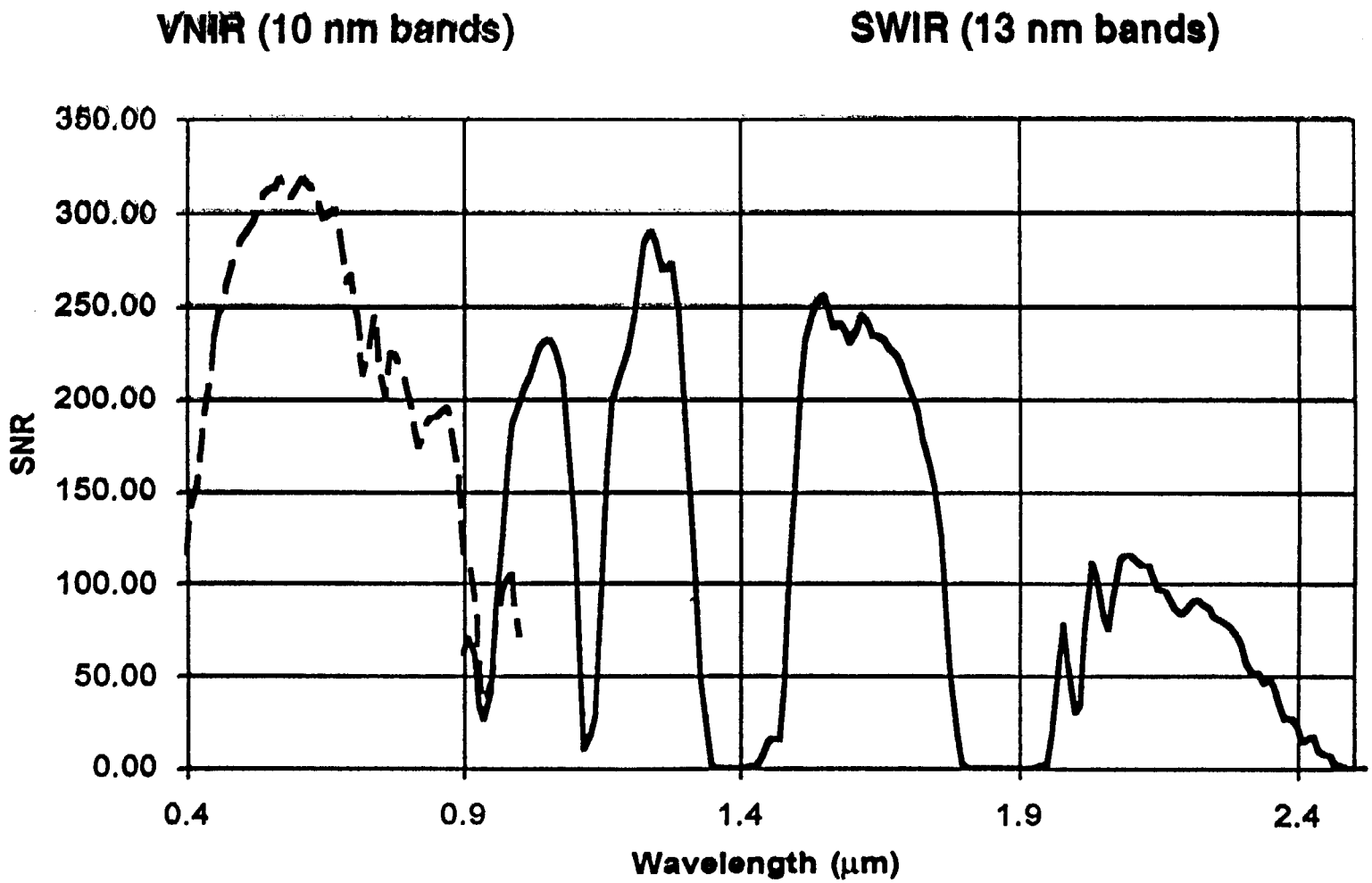

SMALL SATELLITE TECHNOLOGY INITIATIVE

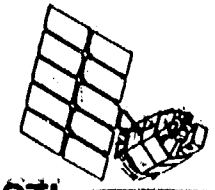

TRW SSTI Mission Overview

SSTI

LAUNCH Summer 1996

OVER 25 SPACECRAFT AND PAYLOAD TECHNOLOGIES DEMONSTRATED

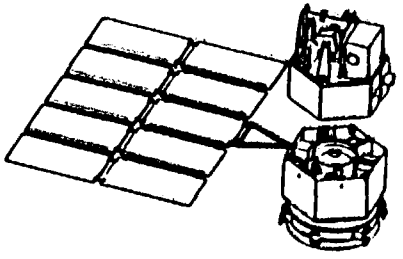

SSTI INSTRUMENTS:
- **HYPERSPECTRAL IMAGER (HSI)**
  - 384 SPECTRAL CHANNELS, 0.4 TO 2.5 μm
  - RADIOMETRIC ACCURACY: 6% HYPERSPECTRAL, 16% PAN
  - GROUND SAMPLE DISTANCE: 5M PANCHROMATIC, 30M HYPERSPECTRAL
- **LINEAR ETALON IMAGING SPECTRAL ARRAY (PLANETARY TECHNOLOGY)**
- **ULTRAVIOLET COSMIC BACKGROUND**

MATURE ADVANCED TECHNOLOGIES INTEGRATED INTO SPACECRAFT BUS

SEPARATE PAYLOAD AND TECHNOLOGY DEMONSTRATION MODULE

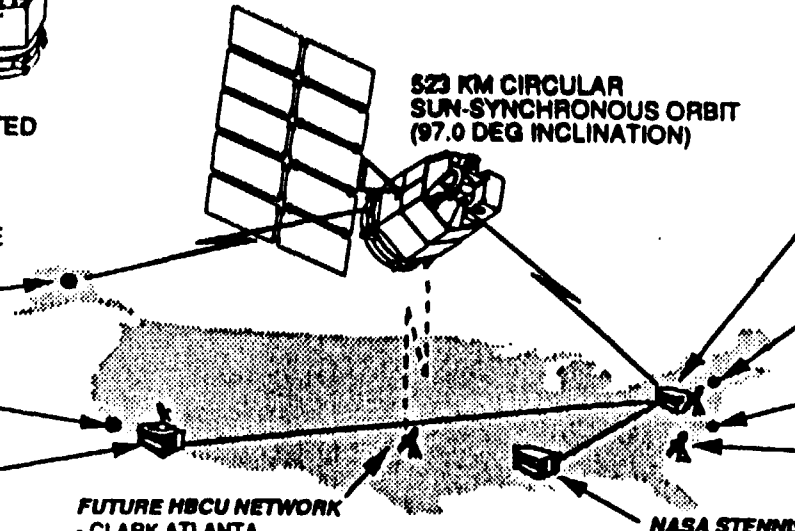

523 KM CIRCULAR SUN-SYNCHRONOUS ORBIT (97.0 DEG INCLINATION)

UNIV OF ALASKA (RECEIVE)

VANDENBERG AFB, CA
- PEGASUS XL
- L1011 LAUNCH

TRW SPACE PARK, CA
- HSI DATA ANALYSIS
- DEMONSTRATION RESULTS ANALYSIS

FUTURE HBCU NETWORK
- CLARK ATLANTA
- HAMPTON STATE
- JACKSON STATE
- MORGAN STATE

NASA STENNIS, MS
- HSI DATA CENTER (LEVEL I PROCESSING)
- DISTRIBUTION TO USERS
- BACKUP OPERATIONS

NASA DSN, WALLOPS
- EARLY ORBIT OPS AND CONTINGENCY

NASA LANGLEY, VA
- DEMONSTRATION RESULTS ANALYSIS

NASA GODDARD, MD
- LEISA DATA PROCESSING
- DEMONSTRATION RESULTS ANALYSIS

TRW (CHANTILLY, VA)
- SSTI PROGRAM OFFICE
- ORBITAL OPERATIONS
- MISSION DATA ARCHIVE AND DISTRIBUTION

JOURNAL OF SPACECRAFT AND ROCKETS
Vol. 31, No. 5, September–October 1994

Midcourse Space Experiment: Introduction to the Spacecraft, Instruments, and Scientific Objectives

John D. Mill*
Environmental Research Institute of Michigan, Arlington, Virginia 22209
Robert R. O'Neil† and Stephan Price‡
U.S. Air Force Phillips Laboratory, Hanscom AFB, Massachusetts 01731
Gerald J. Romick§ and O. Manuel Uy¶
Johns Hopkins University Applied Physics Laboratory, Laurel, Maryland 20723
E. M. Gaposchkin**
Massachusetts Institute of Technology, Lexington, Massachusetts 02173
Glenn C. Light††
The Aerospace Corporation, Los Angeles, California 90009-2970
W. Walding Moore Jr.‡‡
U.S. Army Space and Strategic Defense Command, Huntsville, Alabama 35807-3801
Thomas L. Murdock§§
General Research Corporation, Danvers, Massachusetts 01923
and
A. T. Stair Jr.¶¶
Visidyne, Burlington, Massachusetts 01803

A suite of state-of-the-art sensors, including a cryogenic infrared scanning radiometer and Fourier-transform spectrometer, several visible and ultraviolet imagers and spectrographic imagers, and a set of contamination instruments, are at present being integrated with a highly capable spacecraft for a planned 1994 launch into a polar orbit. The optical sensors cover the spectrum from the far ultraviolet through the longwave infrared (110 nm to 28 μm). The Midcourse Space Experiment (MSX) satellite, funded and managed by the Ballistic Missile Defense Organization, will be a long-duration, observatory-style measurement platform that will collect several terabytes of high-quality data on earth, earthlimb, and celestial backgrounds, ICBM-style targets, and resident space objects. While the principal focus of MSX is to collect phenomenology data in support of ballistic missile defense objectives, it will also be capable of collecting well-calibrated data in support of a variety of civilian science objectives in earth and atmospheric remote sensing and astronomy. This paper reviews the mission objectives, describes the spacecraft and the instrumentation, and discusses the planned observations. It also outlines an innovative approach to reducing, analyzing, and archiving the large database that will result from several years of data collection supporting a variety of scientific objectives.

Introduction

THE functions of Ballistic Missile Defense Organization (BMDO) midcourse sensor systems are to detect, acquire, and track targets and to discriminate lethal from nonlethal objects. To perform these functions, the design of a surveillance system must incorporate a full understanding of the behavior and resulting signatures of the expected targets and the effects of the backgrounds against which these targets must be viewed. This in turn requires detailed characterization and careful modeling of potential target objects and their associated phenomenology, and high-fidelity models of the terrestrial, earthlimb, and celestial backgrounds. These data and models are required across the optical spectrum, over the entire globe, and for an extended time period, to account for seasonal and geographic variations.

The BMDO, and its predecessor the Strategic Defense Initiative Organization (SDIO), have developed a suite of phenomenology models to address these issues, such as the Optical Signature Code (OSC) and the Strategic High Altitude Radiance Code[1] (SHARC). These models have been incorporated into a framework code called the Strategic Scene Generator Model[2] (SSGM), which provides validated scenes at resolution, wavelength, frame rate, and field of view of a candidate sensor under development or test. BMDO and SDIO

Received Sept. 13, 1993; revision received Feb. 17, 1994; accepted for publication Feb. 24, 1994. Copyright © 1994 by the American Institute of Aeronautics and Astronautics, Inc. All rights reserved.

*Research Scientist, Technical Operations Division, Washington Office; also MSX Technical Coordinator.
†Research Physicist, Simulation Branch, Optical Environment Division; also MSX Earthlimb Backgrounds PI.
‡Chief, Backgrounds Branch, Optical Environment Division; also MSX Celestial Backgrounds Principal Investigator (PI).
§Senior Research Scientist, Geospace Remote Sensing Group; also MSX Shortwave Terrestrial Backgrounds PI.
¶Supervisor, Materials Laboratory, Technical Services Department; also MSX Contamination PI.
**Senior Staff, Aerospace Division, Lincoln Laboratory; also MSX Surveillance PI.
††Senior Project Engineer, Surveillance and Defence Integration Division; also MSX Early Midcourse Targets PI.
‡‡Chief, Sensor Components Technology Branch, Optical Sensors Division; also MSX Late Midcourse PI.
§§Director, Science and Phenomenology Operations; also MSX Data Certification and Technology Transfer PI.
¶¶Senior Vice President; also MSX Chief Scientist.

have also sponsored a number of experiments to provide data to validate the codes. Past space experiments have included the so-called Delta series and two payloads on STS-39: the Infrared Background Signature Survey (IBSS) and the Cryogenic Infrared Radiometer and Interferometer System[3] (CIRRIS-1A). Although these experiments have returned valuable data, they were of short duration or limited resolution or sensitivity. MSX is designed to address these limitations and provide the necessary data sets over the globe, during all seasons, and at the resolution and sensitivity necessary to address system issues.

The primary purpose of the Midcourse Space Experiment (MSX) is therefore to collect and analyze target and background phenomenology data to address BMDO midcourse sensor requirements. MSX will demonstrate midcourse sensor functions from space, collect midcourse target and background databases, and demonstrate critical sensor technologies. MSX will perform optical measurements from the far ultraviolet (110 nm) to the very longwave infrared (28 μm) with fully characterized, carefully calibrated sensors. It will collect imagery at high sensitivity and high spatial resolution and spectra at moderate to high resolution and very high sensitivity.

The MSX satellite, with an expected five-year lifetime, is scheduled to be launched on a Delta II booster in 1994 from Vandenburg Air Force Base (VAFB), California, into a sun-synchronous orbit at an altitude of 898 km and an inclination of 99.16 deg. The MSX instruments are the Spatial Infrared Imaging Telescope (SPIRIT) III—a cryogenic radiometer and spectrometer with an estimated 18-month cryogen lifetime, the Ultraviolet/Visible Imaging and Spectrographic Imaging (UVISI) sensor system, the Space Based Visible (SBV) surveillance camera, the On-Board Signal and Data Processor (OSDP), and a suite of instruments to monitor contamination on and around the spacecraft. To augment the MSX sensor data and facilitate analysis, other spaceborne, ground-based, aircraft-based, and sea-based sensors will also be used throughout the mission. To conserve cryogen, activities during the cryogen lifetime will concentrate on above-the-horizon data collection and dedicated target missions, with only 50–100 h of below-the-horizon measurements.

MSX Hardware Description

Spacecraft

The MSX satellite[4] consists of the structure, five primary instrument systems, and the subsystems necessary for instrument support and spacecraft control. The spacecraft measures 510 cm in length and has a square cross section of 150 cm, excluding the two solar arrays. It weighs approximately 2700 kg.

The spacecraft (Fig. 1) is configured to separate the primary sensors from the support electronics to aid thermal control. The forward instrument section includes the sensors, a star camera, ring laser gyros, an S-band beacon receiver antenna, and six ejectable reference spheres. The SBV, UVISI, and SPIRIT III optical axes are coaligned and point in the $+X$ direction. The SPIRIT III cryogenic Dewar also lies along the X axis, running from the instrument section through the open midsection. The aft electronics section includes the power subsystem, the attitude control subsystem, the communications subsystem, the command and data-handling subsystem, the OSDP, and portions of the control electronics for the forward sensors.

Power is supplied by the solar arrays and a multicell nickel-hydrogen (NiH_2) battery. There are two identical solar arrays, each consisting of four 175- by 80-cm panels, attached on either side of the electronics section, providing approximately 1.2 kW at launch. The battery pack consists of 22 NiH_2 cells (1.3 V each) connected in series, with a total capacity of 50 A · h (Ref. 5).

The attitude system consists of several attitude sensors, attitude control units, and an attitude processor. Redundant three-axis ring-laser gyros and a star camera on a common optical bench provide the fundamental attitude reference. The star camera corrects for gyro drift error when MSX is collecting data. When MSX is in parked mode ($+X$ to the zenith) not collecting data, the gyros are supplemented by five digital solar attitude detectors, two horizon sensors, and a three-axis magnetometer. The attitude processor can be programmed to incorporate any combination of sensors, with any relative weight, in the attitude calculations. The attitude control hardware consists of four reaction wheels[6] and three magnetic torque rods. Three reaction wheels are required; the fourth provides redundancy. The reaction wheels can be slowly despun using the magnetic torque rods. This attitude-control-system design was chosen to avoid sensor contamination from the byproducts of thrusters and to minimize expendables.

The satellite communicates on three bands: the L band (1827.8 MHz), the S band (2282.5 MHz), and the X band (8475 MHz). The L band is used exclusively for command uplink and memory loads. The S band is used for 16-kbps housekeeping transmission and either ranging or 1-Mbps transmission of compressed or sampled science data. The X-band is used for 25-Mbps prime science data transmission from the data-recording system. The USAF Satellite Control Network (AFSCN) will monitor the S-band channels globally, but the 25-Mbps prime science data can only be received by the MSX Satellite Communication Facility at Johns Hopkins University

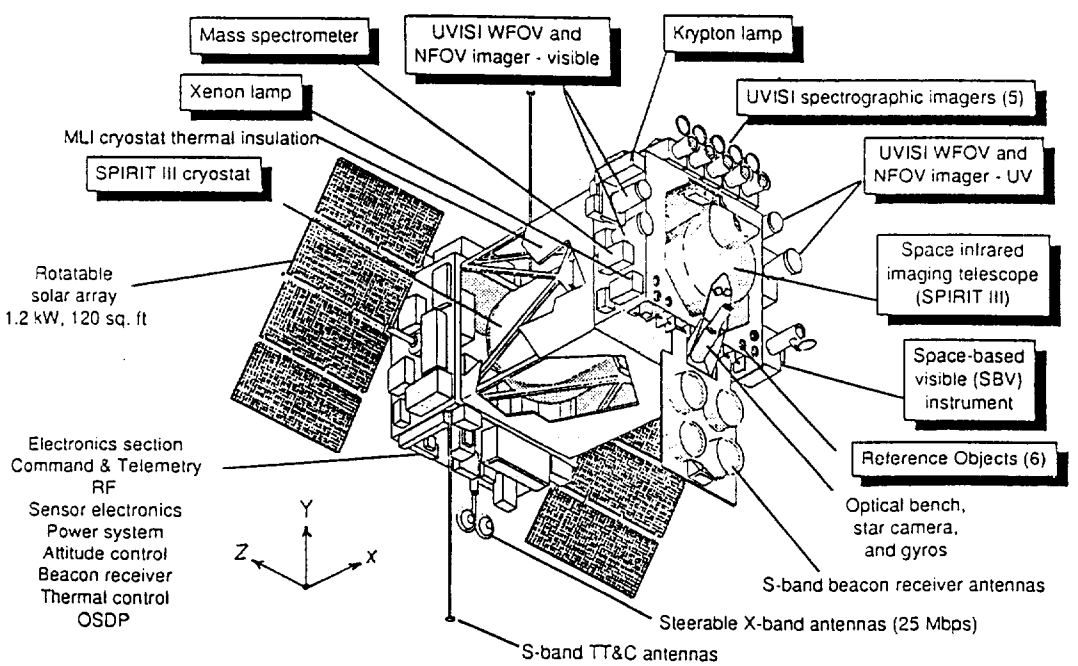

Fig. 1 MSX spacecraft layout.

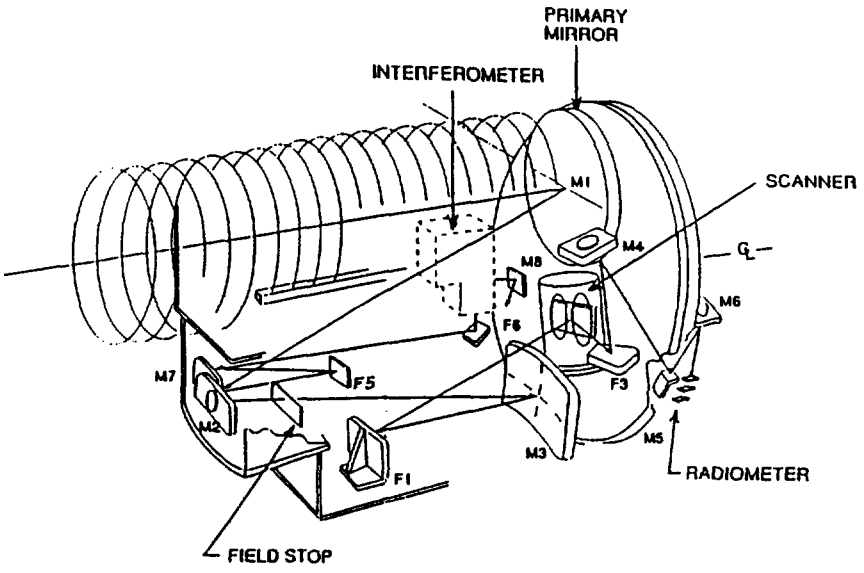

Fig. 2 Schematic diagram of the SPIRIT III sensor.

Table 1 SPIRIT III spectrometer passbands

Channel	Passband, μm
1	17.2–28.0
2	2.6–4.9
3	5.8–8.9
4	4.0–28.0
5	10.6–13.0
6	2.5–24.0

Table 2 SPIRIT III radiometer passbands, array sizes, and sensitivities

Band	Passband, μm	Active columns	Sensitivity (NEFD), 10^{-18} W/cm^2
A	6.0–10.9	8	1.1
B_1	4.22–4.36	2	10
B_2	4.24–4.45		
C	11.1–13.2	4	0.8
D	13.5–16.0	4	0.7
E	18.1–26.0	2	1.7

Applied Physics Laboratory in Laurel, Maryland, during up to six contacts per day, for a total of about 60 min of downlink. Redundant 54-gigabit (Gb) tape recorders will record experiment data for playback over the science data channel. The recording rate may be set at 5 Mbps or 25 Mbps, which correspond to 180 and 36 min of recording time per recorder, respectively. In either case, recorded data are transmitted to the ground station at 25 Mbps.

SPIRIT III

The Spatial Infrared Imaging Telescope (SPIRIT) III sensor is the primary instrument on MSX, covering the spectrum from the midwave infrared (MWIR) to the very longwave infrared (VLWIR).[7] SPIRIT III consists of an off-axis reimaging telescope with a 35-cm-diameter unobscured aperture, a six-channel Fourier-transform spectrometer, a five-band scanning radiometer, and a cryogenic Dewar/heat exchanger. SPIRIT III will demonstrate midcourse surveillance functions, collect target and background phenomenology data, and demonstrate advanced cryogenic sensor technologies in space.

The Dewar holds 944 liters of solid hydrogen that conductively cools the telescope, radiometer, and spectrometer. As the cryogen sublimes, gaseous hydrogen is circulated through a heat exchanger to cool the telescope forebaffle. The cryogen is expected to last at least 18 months and may last as long as 20 months.

The SPIRIT III telescope (Fig. 2) has three sections: the afocal foreoptics, the radiometer reimaging optics, and the spectrometer collimating optics. Between the sensor aperture and the primary mirror (M1), there are a series of baffle rings coated with flat black paint for improved stray-light rejection. The foreoptics use an off-axis, all-reflective design with superpolished mirrors composed of a gold overcoat on a nickel layer on an aluminum substrate. The primary mirror will operate at approximately 15–20 K. An autocollimator measures telescope alignment with respect to the spacecraft attitude system optical bench to an accuracy of 5 μrad.

The Fourier-transform spectrometer has six discrete arsenic-doped silicon (Si:As), impurity-band conduction (IBC) detectors operating at 10.5 to 11.0 K. It collects double-sided interferograms in six spectral bands with programmable spectral resolutions of 2, 3.9, or 20 cm^{-1} over sample times of 4.2, 2.2, and 0.55 s. The passbands of each channel are shown in Table 1. Channel 5 includes a slit mask to reduce sensitivity and increase vertical resolution, allowing ozone, nitric acid, and fluorocarbon measurements in the stratosphere. Channel 6 has a notch filter to reduce the photon noise contribution from CO_2 emissions around 15 μm.

The radiometer has five Si:As focal plane arrays of 8 × 192 pixels each, operating between 11 and 12 K. It collects data in six color bands with a spatial resolution of 90 μrad. The scan mirror can remain fixed or can operate at a constant 0.46-deg/s scan rate with programmable scan fields of regard of 1 × 0.75, 1 × 1.5, and 1 × 3 deg. The radiometer focal-plane assembly employs a combination of dichroic and bandpass filters to allow simultaneous measurements in bands A, D, and E and in bands B and C. The band-B focal plane is divided horizontally into two equal sections, each with a slightly different passband. Although all focal-plane arrays are fully populated at 8 × 192 pixels, not all detector columns are recorded. Table 2 lists the half-power passband, number of active columns, and projected sensitivity for each array.

SPIRIT III incorporates instruments to monitor contamination levels and their effects on the sensor. These include a cryogenic quartz crystal microbalance (CQCM) adjacent to the primary mirror to monitor condensable contaminant accumulation, and an off-axis emissive filament to monitor changes in the primary mirror scattering. There are also very stable emissive sources in several locations to monitor long-term stability.

OSDP

The On-board Signal and Data Processor (OSDP) is a fully redundant, radiation-hardened digital signal processor that will process data from a portion of the SPIRIT III focal plane in parallel with raw data collection and will demonstrate target detection and tracking. OSDP will also be used to collect statistics on the effects of single-event upsets (SEU) on spaceborne electronics. OSDP includes a special-purpose time-dependent processor (TDP), a general-purpose 1750A processor with object-dependent and mission-dependent processing (ODP/MDP) functions for single-scan and multiscan processing of target scenes, ancillary hardware

Table 3 SBV characteristics

Spectral range, μm	0.3–0.9
Spatial resolution	12.2″ (60 μrad)
Field of view, deg	1.4 by 6.6
Aperture, f/no.	15 cm, $f/3$
FPA size (four CCDs)	420 by 1680 pixels
Frame times, s	0.4, 0.5, 0.625, 1.0, 1.6, 3.125

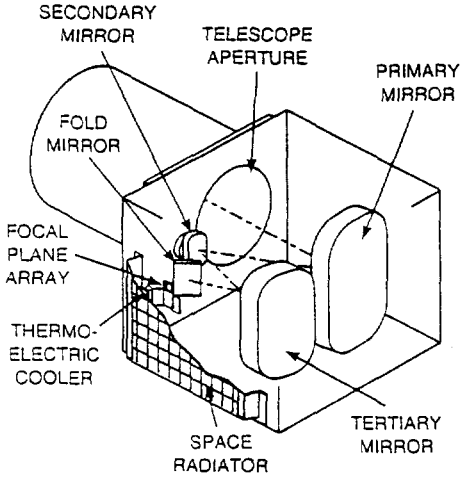

Fig. 3 SBV telescope schematic.

for accepting logic pulse commands from the spacecraft, and a memory card for SEU testing.

The OSDP has two operational modes. In the target track mode, OSDP receives digitized infrared sensor data from SPIRIT III bands A and D and filters the data to detect targets and form tracks. Metric state-vector data (angles and angle rates or position and velocity) are then developed for each target. The OSDP can also cooperate with the spacecraft tracking processor to provide MSX with a closed-loop tracking capability. In the test mode, OSDP will conduct 1750A computer self-checking, radiation-hardened memory SEU logging, and digital-logic upset rate testing.

SBV

The Space Based Visible (SBV) camera[8] will be used to collect data on target signatures at visible wavelengths, perform space surveillance demonstrations such as cataloging resident space objects, and demonstrate advanced visible sensor technologies in space for future development of operational sensors.

SBV incorporates a 15-cm-aperture off-axis, reimaging, all-reflective telescope (Fig. 3), a thermoelectrically cooled, front-illuminated, bare CCD focal plane, a signal processor, and a variety of support electronics including an experiment control system, a telemetry formatter, and a modest data buffer for temporary data storage. The SBV focal plane consists of four three-side-abuttable frame transfer CCDs with 420 by 420 27-μm pixels each. They exhibit 28% quantum efficiency and six noise electrons per sample at the −40°C operating temperature. SBV design characteristics are listed in Table 3.

The signal processor suppresses background clutter, detects moving targets, and generates target reports. It can operate in sidereal track mode, where it rejects stars and detects moving targets; or in a target track mode, where it rejects the moving background stars. In either case, the stars are used to determine the SBV boresight. The SBV Experiment Controller coordinates the operations of each SBV component (telescope, FPA, signal processor, and power converter) according to commands received from the ground, and may store a command sequence for later execution. The experiment controller may also be commanded to execute a closed-loop tracking sequence using data from the SBV focal plane, sent through the SBV signal processor, to determine the future position of an observed target in focal-plane coordinates.

UVISI

The Ultraviolet/Visible Imaging and Spectrographic Imaging (UVISI) sensor system consists of five spectrographic imagers (SPIMs) and four imagers. Together, the SPIMs cover a spectral range from far ultraviolet (110 nm) to near infrared (900 nm). The imagers include wide-field-of-view (WFOV) and narrow-field-of-view (NFOV) sensors in the visible and ultraviolet. UVISI's primary mission is to collect data on celestial and atmospheric backgrounds. Secondary missions include target characterization and contamination observations in conjunction with the contamination instruments.

All five SPIMs follow a similar all-reflective design (Fig. 4), incorporating an external sunshade, a scanning mirror, a slit/filter, a collimating mirror, a dispersive grating, and an intensified CCD focal plane. SPIM electronics perform pixel-summing operations on the 40-by-272 element SPIM focal plane array, yielding 40, 20, 10, or 5 bins in the spatial direction and 272, 136, or 68 bins in the wavelength direction. Each pixel has a 14-bit resolution, and data can be selectively filled to 16 bits or compressed to 8 bits before being passed to the MSX data-recording system. Passbands and spectral resolutions of the SPIMS are summarized in Table 4.

The spatial imager systems include an external sunshade, imaging optics, filter wheel and drive motor, and intensified CCD focal planes. Three of the four spatial imagers employ all-reflective optics. Both NFOV imagers use a Cassegrainian design; the UV WFOV imager uses an off-axis three-mirror design. The visible WFOV imager employs a four-lens refractive design. The dissimilarity in WFOV designs is a consequence of the need to control instrument weight. In the visible, the refractive optical design performs efficiently and weighs less than a comparable reflective design. The reflective design has greater throughput at far-UV wavelengths.

The commandable filter wheel in each imager houses three bandpass filters and a neutral-density filter, in addition to an open and a closed position. In the case of the visible WFOV imager, a lens is substituted for one of the filters. This lens is used to focus the near-field backscattered emissions from the xenon flashlamp as part of the MSX contamination experiment. Filter passbands were chosen to fulfill specific mission objectives. For example, the UV NFOV 200–230-nm filter is used for viewing the NO γ bands in airglow measurements or the CO Cameron bands in plume measurements. The UV WFOV 117–127-nm filter is used for viewing Lyman-α emission from hydrogen in the geocorona, from auroral hydrogen

Table 4 UVISI spectrographic-imager characteristics

Instrument	Passband, nm	Resolution, nm	
		0.10-deg slit	0.05-deg slit
SPIM1	113–173	0.8	0.5
SPIM2	162–252	1.2	0.9
SPIM3	251–388	1.8	1.5
SPIM4	377–582	2.8	2.1
SPIM5	589–902	4.3	2.9

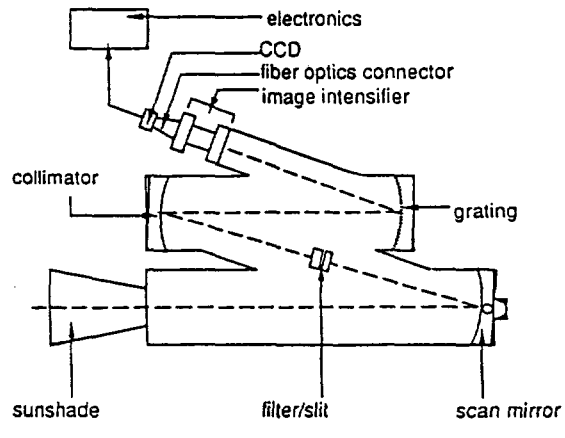

Fig. 4 Optical diagram of the UVISI spectral imagers.

Table 5 UVISI imager characteristics

Instrument	UV NFOV	UV WFOV	Vis NFOV	Vis WFOV
FOV, deg	1.28 × 1.59	10.5 × 13.1	1.28 × 1.59	10.5 × 13.1
Resolution, μrad	90	820	90	820
Passbands, nm:				
open	180–300	110–180	300–900	380–900
closed	—	—	—	—
ND filter	($\times 10^{-3}$)	($\times 10^{-3}$)	($\times 10^{-4}$)	($\times 10^{-4}$)
WB1 filter	200–230	117–127	305–315	426–429
WB2 filter	230–260	128–138	350–440	529–631
WB3 filter	260–300[a]	145–180	470–640	(Lens)

[a]Includes polarization filter.

precipitation, or from outgassing of the SPIRIT III cryogen. UVISI imager characteristics are listed in Table 5.

Each imager has a focal-plane array of 256 by 244 pixels with 12-bit resolution. Like the SPIMs, pixel data may be expanded to 16 bits or compressed to 8 bits. At the 2-Hz sample rate the full 256-by-244 pixel frame is used; the 4-Hz sampling rate uses a 256-by-100-pixel subframe. The combinations of different filters, slits, scan rates, and data compressions create many operational modes. These parameters may be set independently, either by command uplink or by the on-board image-processing software.

Contamination Instruments

MSX carries a suite of instruments[9] designed to characterize the molecular and particulate environment around the spacecraft. This suite includes five quartz-crystal microbalances (QCMs), ion and neutral mass spectrometers, a total-pressure sensor (TPS), a xenon flashlamp (XF), and a krypton flashlamp/radiometer (KF/KR).

The four temperature-controlled quartz-crystal microbalances (TQCMs) are distributed about the MSX instrument section, each oriented to view the mass flux arriving from a particular direction of interest. One faces parallel to the sensor's optical axis ($+X$); one faces in the direction of the orbital vector ($+Z$) and one faces into the sun ($-Y$) during parked mode; and one faces the electronics section and solar arrays ($-X$). Each TQCM unit incorporates two quartz crystals, one exposed to the spacecraft environment and one protected. The natural vibrational frequency of the exposed crystal changes as it accumulates mass, and the total mass deposited on the TQCM is measured by observing the beat frequency between the crystals. Each TQCM is maintained at a temperature less than (-50 ± 1)°C by an internal thermoelectric unit that can also be commanded to heat the crystal as part of a thermogravimetric gas analysis (TGA) to determine the composition of the deposits on the TQCM. A fifth QCM, the cryogenic quartz-crystal microbalance (CQCM), is mounted inside of SPIRIT III near the primary mirror. The CQCM temperature floats at the temperature of the SPIRIT III optical bench (15–20 K) and may also be commanded to perform a TGA. Both the CQCM and the TQCMs are sensitive to accumulations as small as 1.5×10^{-9} g/cm^2.

The neutral mass spectrometer is a closed-source quadrupole design with an electron-bombardment ion source. It faces the same direction as the MSX sensors ($+X$) and measures species ranging in mass from 1 to 150 atomic mass units (amu). The ion mass spectrometer is a Bennett-type instrument. It faces into ram during parked mode, 90 deg from the sensor lines of sight, and measures ions ranging in mass from 1 to 60 amu. Gas densities as low as 10^6 molecules and 10^3 ions per cm^3 can be measured by the neutral and ion mass spectrometers, respectively.

The total-pressure sensor measures ambient pressures ranging from 1×10^{-10} to 1×10^{-5} Torr. The sensor includes a permanent magnet and a 1000- to 10,000-V potential difference, which increases the collision rate between ions and neutral atoms. The resulting ion current is a measure of the ambient pressure.

The xenon flashlamp works in conjunction with the UVISI WFOV visible imager to track particles. The flashlamp produces 300- to 900-nm photons in a series of half-second pulses which intersect the imager line-of-sight at 200 cm. The imager collects a series of frames of the backscattered emissions, from which the size and velocity of particles as small as 0.5 μm may be deduced.

The krypton flashlamp/radiometer works in conjunction with the UVISI SPIM3 to measure the water-vapor concentration. The krypton flashlamp produces a beam of 123.6-nm photons, which intersects with the SPIM3 field of view at a distance of 95 cm. Water molecules are dissociated into atomic hydrogen and excited hydroxyl radicals, which promptly radiate at 306.5 nm at an intensity proportional to the water vapor concentration. Gas densities as low as 10^6 molecules/cm^3 can be measured.

MSX Scientific Objectives

Target Functional Demonstrations and Phenomenology

The MSX Early and Late Midcourse Targets Experiments principal investigator teams will carry out functional demonstrations and collect phenomenology data on well-characterized midcourse targets. Functional demonstrations will establish the ability to acquire and track threat objects in the presence of real backgrounds using current optical-sensor technology. Target phenomenology data will be used to validate target signature models, such as the Optical Signatures Code (OSC).

The early midcourse phase of a ballistic missile engagement begins with the release of the postboost vehicle (PBV). Subsequent activities include maneuvers to position the reentry vehicles (RV) for proper targeting, plus any activities associated with target deployment, such as spin-up and release. The late midcourse phase begins when the target complex is still seen as a cluster of closely spaced objects (CSO) but is beginning to evolve into individually resolved objects. In either phase, the PBV and RVs may use techniques to confuse the surveillance sensors, including, for example, the deployment of decoys that mimic warheads, traffic balloons to confuse tracking and discrimination sensors, and chaff. In addition, various design elements of the PBV or RVs may be intended to alter or eliminate signature features that could aid in discrimination.

The primary focus of the early midcourse target experiments is the resolution of issues in CSO tracking and evolution, metric and radiometric discrimination, deployment phenomenology, and PBV tracking. These experiments will also lead to the development, for the first time ever, of an extensive database of early midcourse target signature phenomenology observed from a space-based sensor.

The primary focus of the late midcourse target experiments is the resolution of acquisition, tracking, data fusion, and discrimination issues for the late midcourse phase of strategic or theater defense engagements. In addition, unique data are to be obtained on the behavior of longwave infrared and visible target signatures, which permit the detailed correlation of infrared signatures and their phenomenology with both body rotational dynamics and dynamical evolution.

The MSX target signature measurement requirements will be addressed in a dedicated MSX strategic missile flight, five cooperative Theater Missile Defense (TMD) targets, and probably other cooperative target launches or targets of opportunity (TOO). The MSX Early Midcourse dedicated flight will use the Operational Deployment Experiment Simulator (ODES) PBV to deploy a total of 26 midcourse objects of various types under differing deployment conditions. Two additional late-midcourse dedicated flights were to have used the Minuteman I (MMI) booster system and the Multi-Service Launch System (MSLS) payload platform to deploy two sets of threat objects each, but they are presently unfunded. A second dedicated ODES flight is also unfunded. The five TMD targets include three Black Brant X and two Talos/Sergeant/Aries launches from Wallops Island, VA, to test the ability of a space-based sensor to track theater missiles against an Earth background.

During all dedicated and cooperative target flights, the objects will be viewed simultaneously by the MSX satellite and a number of aircraft, ship, and ground-based sensors to establish ground truth and sensor-to-sensor correlation. Other experiments will acquire background data in target track mode with realistic engagements, to investigate acquisition and tracking functions under a variety of stressing background conditions.

The key targets on all flights are of near-term strategic and theater interest, and include re-entry-vehicle surrogates, lightweight replicas, traffic balloons, and a solid aluminum 18-cm sphere with an emissive coating, which functions as an in-flight calibration aid. At least one object in each class will carry lightweight dynamics and

temperature instrumentation to collect in-flight truth data. One object in each target complex will carry a Global Positioning System transponder for metric truth.

The MSX satellite will also be used to demonstrate space-object surveillance from a space platform, and develop a database of resident-space-object (RSO) observations. The object of space surveillance is to create and maintain current goniometric and radiometric information on all man-made objects in earth orbit. RSOs include active payloads, rocket bodies, upper stages, and space debris. The present ground-based Space Surveillance Network (SSN) has limitations in coverage, capacity, sensitivity, available optical wavelengths, and accuracy. MSX will be the first space-based platform covering optical wavelengths from UV to LWIR to investigate wide-area space surveillance.

Catalog maintenance experiments are designed to exploit the greater observing opportunities afforded by a space-based platform to address the issues of coverage and capacity. These experiments must account for spacecraft constraints, communication limitations, and data accuracy, as well as uncertainties in the existing catalog. Objects to be brought into the catalog come from new launches, lost objects, or breakups. New launches are the most stressing to the SSN, due to the requirement to catalog these objects during their first revolution if possible.

Photometric and radiometric data used with high-fidelity satellite models can be used to identify a particular satellite design (e.g., spin-stabilized cylinders) and operational status, a process called space-object identification (SOI). There are also three experiments concerning space debris. One will use all MSX sensors to develop a multispectral model of space debris. A second survey experiment will compile a database of existing debris. The third experiment will capture a satellite breakup, should one occur, and provide detailed data on the resulting debris and its relation to the debris population.

Background Phenomenology

A major objective of the MSX mission is to obtain definitive data sets of celestial, earthlimb, and terrestrial backgrounds that could be encountered by operational surveillance sensors. The general objectives of the background measurements are to obtain precise radiometric values in specific optical bandwidths at high spatial resolution to assess the operational limitations that infrared and ultraviolet background clutter impose on surveillance systems. These spatial clutter data are supplemented by the spectral sensors, which provide critical diagnostic information to understand the spectral content within the broad radiometer bands. The spectral sensors also provide additional data to validate the background models, such as the Strategic High Altitude Radiance Code (SHARC). The mission timeline is being designed to have the flexibility to observe transient geophysical and celestial phenomena (geomagnetic storms, volcanoes, asteroids, etc.) with a response time of 24 h or less.

The MSX mission provides unique capabilities to extend the observational database for celestial backgrounds. In the long-wavelength infrared (LWIR), the SPIRIT III sensor has about the same sensitivity as the Infrared Astronomy Satellite (IRAS) but some 30 times better spatial resolution. (IRAS was a NASA-UK-Netherlands satellite, which mapped 96% of the sky in four spectral bands from 8 to 120 μm during a 10-month mission in 1983.) The SPIRIT III interferometer spectral resolution ranges from comparable to 10 times better. In the ultraviolet, the imagers and spectral imagers will be by far the most sensitive ever flown for astronomical measurements.

Three celestial background experiments are designed to complete the LWIR database. They are to map: 1) the areas of the sky missed by IRAS; 2) high-source-density regions, primarily along the galactic plane, where the IRAS survey was confused by multiple sources on a detector; and 3) the sector less than 60 deg from the sun. Source lists from these experiments will be combined with the IRAS point-source catalog, and their positions improved by identification with stars in astrometric catalogs, to create an all-sky infrared astrometric catalog. LWIR photometry will be done on a number of stars for scaling spectral composites or templates, which will then be compiled into a Stellar Atlas to be used for in situ calibration of space-based systems. Asteroids will be observed to ascertain their suitability as calibration sources.

Other experiments include observations in the galactic plane to probe galactic structure; to map extended sources such as H II regions, large galaxies and areas of bright infrared structure due to interstellar dust; and to characterize fine-scale features in the solar system such as cometary dust trails and the zodiacal dust bands. Interferometry will be done on sources with infrared spectral features (AGB stars and other evolved objects, H II regions, planetary and reflection nebulae) as well as spectral mapping of large bright regions such as the galactic center and the Orion Nebula.

Atmospheric background measurements will be collected as a function of tangent altitude, latitude, season, and atmospheric conditions, including quiescent, geomagnetically disturbed, and auroral. The goal is to bound the intensity and spectral content of small-scale spatial irregularities of earthlimb ultraviolet, visible, and infrared backgrounds and to determine their global distributions, associations with specific phenomena, and frequencies of occurrence. Earthlimb background experiments will measure the radiance and structure from nadir to full limb viewing geometries at tangent heights up to 300 km. The atmospheric phenomena to be measured include aurora, airglow, mesospheric clouds, noctilucent clouds, Joule-heated atmospheres, and stratospheric warmings. Several experiments will be coordinated with ground-based facilities, principally sites for airglow and auroral observations, and space-based assets, such as DMSP and NOAA 11 and 12.

Due to the comprehensive nature of the MSX mission and its extensive instrumentation, this program is ideally suited to address many environmental issues of global atmospheric relevance. For example, the ultraviolet and visible emissions will be evaluated for key trace constituents to supplement the existing database on climate change. Earthlimb observations include a dedicated experiment to measure chlorofluorocarbons and nitric acid. The 10.6- to 13-μm band of the SPIRIT III interferometer has been designed to obtain data in the altitude range from 10 to 40 km. Dominant emissions in this band include nitric acid, chlorofluorocarbons (CFC), ozone, and the thermal signature of stratospheric aerosols. The capabilities of the MSX spectral sensors to measure the altitude dependence of atmospheric trace species and other constituents are shown in Fig. 5. The results will be available to the scientific community for incorporation into stratospheric chemistry models to support ozone depletion studies and other investigations.

Terrestrial backgrounds will be observed episodically by the MSX sensors with particular interest in two wavelength regions where the mean radiance and the spatial structure is reduced due to atmospheric absorption. In the 0.2- to 0.3-μm wavelength region, the middle ultraviolet (MUV), the solar albedo is approximately four orders of magnitude less than in the visible regions, due to absorption by ozone. An objective of the MSX program is to characterize small-scale MUV spatial structure in the nadir views of sunlit atmospheres. Similarly, middle-wavelength infrared (MWIR) terrestrial backgrounds will be observed in two selected bandwidths in the region of strong CO_2 absorption at 4.3 μm. Experiments are planned to probe the atmosphere for small-scale structure as a function of altitude. Observations coordinated with corollary assets will provide diagnostics of atmospheric conditions, cloud types, water-vapor profiles, aerosol content, and temperature profiles. Corollary sensors include the DOE Atmospheric Radiation Measurement (ARM) sites,[10] NOAA 11 and 12 satellites, and sites in the National Science Foundation Coupling, Energetics, and Dynamics of Atmospheric Regions (CEDAR) network.[11]

Calibration and Sensor Characterization

The accurate and precise calibration of the instruments aboard the MSX spacecraft is the critical component in the chain of events that leads from the collection of data to the correct scientific interpretation of those data. The MSX program has recognized this fact by insisting that the data from this experiment meet stringent quality requirements for accuracy and precision. Because of the amount and diversity of the data that will be collected during the mission, the MSX program cannot operate as similar programs have in the past.

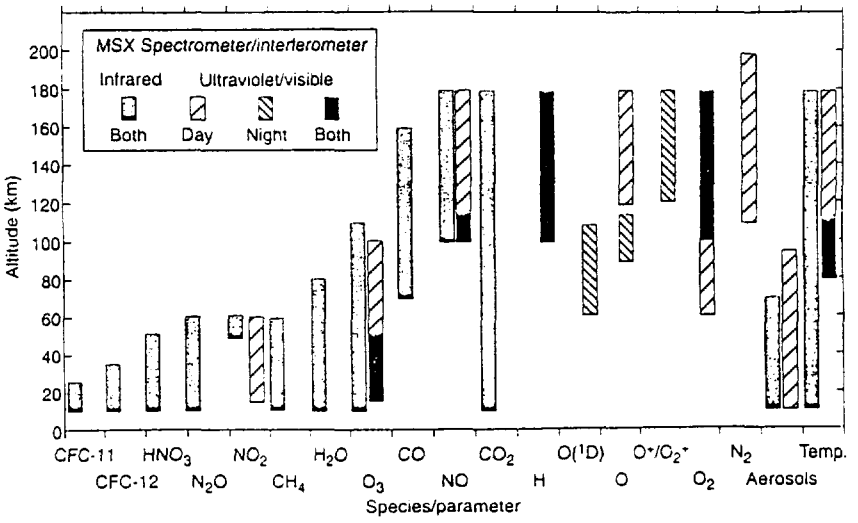

Fig. 5 Altitudes over which various atmospheric constituents can be measured by MSX.

Past practice has been to produce and archive a Level 2 database (in engineering units) as the standard product provided to investigators. However, many space programs in the past have produced calibrated Level 2 data products only to find that the calibration that was used was not correct or that the sensor had not been fully understood and the calibration was therefore inappropriate. The result was that the entire Level 2 database had to be produced again. For the MSX Program, where the volume of Level 1 data will be several terabytes, a reprocessing task of this magnitude would have enormous resource-allocation implications. The MSX Program has taken a different approach, producing the Level 2 data sets on an as-required basis. Thus, the scientific analysis begins with the best available calibration and instrument performance certification, and analysis that begins late in the program will have the benefit of the accumulated instrument and calibration experience up to that point.

The MSX flight data will be delivered to the scientific investigators along with the procedures and calibration routines required to convert the Level 1A data (digitized, decommutated, time-ordered) to Level 2 data (calibrated). This conversion will be performed at the investigator's home institution. The software package with which the data are converted from Level 1A to Level 2 is called CONVERT. The CONVERT process is certified by the Data Certification and Technology Transfer (DCATT) PI team and recertified each time the calibration of the instrument is adjusted during the mission. The certification process begins with the oversight of the instrument calibration and the design of the CONVERT algorithms and software. It is completed with the demonstration of successful conversion on standard test data, provided initially by the ground calibration and later by flight data.

The calibration of the optical instruments aboard MSX includes both ground testing and on-orbit measurements. The error budget for the calibration has been based on the final specification for the radiometry of the data produced by the MSX sensor suite. The ground-chamber testing probes all of the sensor's radiometric and goniometric performance specifications and will provide data that directly demonstrate that the instruments meet all of their performance specifications prior to flight. All of the ground-test-chamber data are traceable to NIST standards.

The on-orbit calibrations will use standard reference objects. Stars and other celestial objects will be used to verify the ground radiometric and goniometric calibrations. The MSX Program has supported a ground-based measurement program that has been designed to measure about 30 reference stars over five years, beginning two years before flight. These stars are the basis for the external calibration of the long- and short-term repeatability performance of the sensor. Because atmospheric absorption prevents the ground-based observations from covering the entire spectrum, the relative spectral response calibration will be based not only on the reference-star photospheric emission models, but also on the measurement of small black reference spheres, which will be periodically released from the spacecraft.[12] There are six of these spheres: five black emissive objects, which provide secondary infrared calibration sources, and one reflective object to validate models of the upwelling earthshine, which is one of the larger uncertainties in the radiometric error budget for the emissive spheres. The spheres have a diameter of 2 cm and are spring deployed at about 13 m/s.

The calibrated data from the MSX sensors will be radiometrically uniform to about 1% within a single waveband image. This level of relative radiometric uniformity is based on the excellent uniformity of responsivity shown in the component-level testing of the focal-plane arrays and the preliminary sensor level data, using the full optical path, taken on the ground calibrator during instrument testing. The spatial distortion uncertainty of the final images, after on-orbit calibration against known star fields, is expected to be on the order of 0.05 pixel (about 5 μrad) over the full 1-deg field.

Data Management

The effective exploitation of the valuable data collected during the life of the MSX program requires an up-front investment in a well-organized data system. Data management has been a key part of the MSX program planning and development process since the beginning.

There are two unique aspects to the data system concept designed for the MSX program. The first is the creation of a distributed system for data processing and analysis, rather than the centralized approach typical of many other experimental programs. A data-processing center has been created at each of the major sensor vendors with the responsibility of monitoring sensor performance, verifying the quality of the data, and providing a certified calibration package of software and conversion algorithms (the CONVERT package) for use by the entire MSX community. The value in this approach is that the engineers who are most familiar with the sensor characteristics are available to support the data verification process.

The second unique aspect of the data system is the parallel data flow. The data are sent simultaneously to the data-processing centers for verification and to the principal investigators to support rapid assessment and evaluation of technology questions. The results of the verification process and any changes or updates to the calibrations are then applied to the detailed analysis and interpretation of the data. Analysis is performed at data analysis centers created at the home institutions of each of the principal investigators.

Another important part of the MSX program is the involvement of the BMDO Phenomenology Data Centers as key components of the MSX Data System. BMDO created the Phenomenology Data Centers to act as repositories for the experimental data from BMDO experiments. The Backgrounds Data Center (BDC) at the Naval Research Laboratory is the primary archive for the MSX data and acts as the hub for the distribution of the MSX sensor data, supporting data such as attitude and ephemeris, operations planning informa-

tion, and the results of the verification process. The BDC will also archive and distribute the prelaunch calibration and test data and analysis results. The Midcourse Data Center at USASSDC is the BMDO repository for targets data and primarily serves the MSX target-related experiment analysis activities.

Concluding Remarks

The MSX satellite has a suite of state-of-the-art radiometers, imagers, and spectrometers covering the spectrum from the far ultraviolet to the very longwave infrared. It will not only provide data to answer fundamental questions about the performance of BMDO surveillance systems, but can serve as a highly capable observatory to collect data of broad scientific interest and of potentially high value to the nation. The infrastructure for experiment planning, operations, and data reduction and analysis is in place. It is expected that there will also be many lessons learned in operation of a tasked spacecraft, distributed data processing, and the efficient archiving of very large data sets that will be of interest to the civilian space community. Spacecraft integration is nearly complete, and launch is planned for late 1994.

Acknowledgments

We would like to thank Mrs. Mary McLean, who gathered much of the documentation used in preparing the hardware sections of the paper. We would also like to acknowledge the valuable assistance of the engineering staffs of the Johns Hopkins University Applied Physics Laboratory, the Utah State University Space Dynamics Laboratory, and the MIT Lincoln Laboratory, who reviewed the hardware sections for accuracy and currency.

The Midcourse Space Experiment is sponsored by the Ballistic Missile Defense Organization. We gratefully acknowledge the steadfast support of the BMDO and the program manager, Lt. Col. Bruce Guilmain, in making this program possible.

References

[1]Sharma, R. D., Duff, J. W., Sundberg, R. L., Bernstein, L. S., Gruninger, J. H., Robertson, D. C., and Healey, R. J., "Description of SHARC-2, The Strategic High-Altitude Radiance Code," U. S. Air Force Phillips Laboratory, PL-TR-91-2071 (NTIS No. ADA 239008), 1991.

[2]Heckathorn, H., and Anding, D., "Strategic Scene Generation Model: Baseline and Operational Software," *Proceedings of the SPIE Conference on the Characterization, Propagation and Simulation of Sources and Backgrounds III*, International Society for Optical Engineering, Vol. 1967, 1993, pp. 151–164.

[3]Bartschi, B., Steed, A. J., Blakely, J. G., Ahmadjian, M., Griffin, J. R., and Nadile, R. M., "Cryogenic Infrared Radiance Instrumentation for Shuttle (CIRRIS 1A) Instrumentation and Flight Performance," *Proceedings of the International Symposium on Optical Applied Science and Engineering*, International Society for Optical Engineering, Vol. 1765, 1992, pp. 64–74.

[4]Huebschman, R. K., and Pardoe, H. T., "The Midcourse Space Experiment Spacecraft," AIAA Paper 92-0977, Feb. 1992.

[5]Jenkins, J. E., "Design of the MSX NiH_2 battery," *Proceedings of the 26th Intersociety Energy Conversion Engineering Conference*, American Nuclear Society, Vol. 3, 1991, pp. 249–252.

[6]Marshall, T., Gunderman, T., and Mobley, F., "Reaction wheel control of the MSX satellite," *Proceedings of the American Astronautical Society Guidance and Control Conference*, AAS-91-038, 1991, pp. 136–143.

[7]Anon., *SPIRIT III Sensor User's Guide*, Revision 3, Utah State Univ. Space Dynamics Lab., SDL/92-041, Logan, UT, May 1993.

[8]Dyjak, C. P., and Harrison, D. C., "Space-based Visible Surveillance Experiment," *Proceedings of the SPIE Conference on Surveillance Technologies*, International Society for Optical Engineering, Vol. 1479, 1991, pp. 42–56.

[9]Uy, O. M., "Contamination Experiments in the Midcourse Space Experiment (MSX) Satellite," *Proceedings of the SPIE Conference on Optical System Contamination: Effects, Measurements, Controll III*, International Society for Optical Engineering, Vol. 1754, 1992, pp. 170–176.

[10]Anon., *The Possible Direct Use of Satellite Radiance Measurements by the Atmospheric Radiation Measurement Program*, U.S. Dept. of Energy, DOE/ER-0585T, March 1993.

[11]Romick, G. J., Killeen, T. L., Torr, D. G., Tinsley, B. A., and Behnke, R. A., "CEDAR: An Aeronomy Initiative," *Eos*, Vol. 68, No. 2, 1987, pp. 19–21.

[12]Kintner, E. C., and Sohn, R. B., "Emissive Reference Spheres as Absolute Calibration Sources for an Orbiting LWIR Sensor," *Proceedings of the SPIE Symposium on Aerospace and Remote Sensing*, International Society for Optical Engineering, Vol. 1938, 1993, pp. 153–162.

a reprint from Applied Optics

Ultraviolet and visible imaging and spectrographic imaging instrument

J. F. Carbary, E. H. Darlington, T. J. Harris, P. J. McEvaddy, M. J. Mayr, K. Peacock, and C. I. Meng

The Ultraviolet and Visible Imaging and Spectrographic Imaging experiment consists of five spectrographic imagers and four imagers. These nine sensors provide spectrographic and imaging capabilities from 110 to 900 nm. The spectrographic imagers share an off-axis design in which selectable slits alternate fields of view (1.00° × 0.10° or 1.00° × 0.05°) and spectral resolutions between 0.5 and 4 nm. Image planes of the spectrographic imager have a programmable spectral dimension with 68, 136, or 272 pixels across each individual spectral band, and a programmable spatial dimension with 5, 10, 20, or 40 pixels across the 1° slit length. A scan mirror sweeps the slit through a second spatial dimension to generate a 1° × 1° spectrographic image once every 5, 10, or 20 s, depending on the scan rate. The four imagers provide narrow-field (1.28° × 1.59°) and wide-field (10.5° × 13.1°) viewing. Each imager has a six-position filter wheel that selects various spectral regimes and neutral densities. The nine sensors utilize intensified CCD detectors that have an intrascene dynamic range of $\sim 10^3$ and an interscene dynamic range of $\sim 10^5$; neutral-density filters provide an additional dynamic range of $\sim 10^{2-3}$. The detector uses an automatic gain control that permits the sensors to adjust to scenes of varying intensity. The sensors have common boresights and can operate separately, simultaneously, or synchronously. To be launched aboard the Midcourse Space Experiment spacecraft in the mid-1990's, the ultraviolet and visible imaging and spectrographic imaging instrument will investigate a multitude of celestial, atmospheric, and point sources during its planned 4-yr life.

Key words: Ultraviolet–visible sensors, atmospheric remote sensing, intensified CCD sensors.

1. Introduction

Various agencies require scientific information about the terrestrial atmosphere and surface, the celestial scene, and objects appearing against such backgrounds during both day and night conditions. Instruments fulfilling these requirements should provide global or near-global remote sensing over an extended time span of several years. Furthermore, they should conduct observations over as wide a spectral and spatial range as possible. The ultraviolet and visible instrument on the Midcourse Space Experiment (MSX) mission[1] has been designed and constructed to satisfy these requirements in conjunction with other instruments onboard the spacecraft. The instrument has the acronym UVISI, which signifies ultraviolet and visible imaging and spectrographic imaging.

UVISI will play a unique role in remote sensing. The nine UVISI sensors sample the electromagnetic spectrum from 110 to 900 nm with a spectral resolution as good as 0.5 nm, a spatial resolution as good as ~ 100 μrad, and a time resolution as fast as 0.1 s. The intensified, filtered detectors can accommodate $\sim 10^{11}$ orders of magnitude in scene brightness. Furthermore, the UVISI instrument includes an image processor that can accept data from any of the imagers, perform a real-time analysis of the scene, and send tracking information to the spacecraft attitude system. This gives the instrument and the MSX the ability to perform autonomous acquisition and tracking of desired elements of a scene.

The five UVISI spectrographic imagers (SPIM's) will provide spatial maps of the spectra of various objects and backgrounds. Primary observations for the SPIM's include terrestrial dayglow and nightglow, auroral radiance, stellar and zodiacal light spectra, and plume contrails in the upper atmosphere. When suitably inverted, the spectral radiances of the airglow reveal properties of the atmosphere such as concentrations of major and minor constituents (including species such as O_2, N_2, NO, OH, and O_3),

The authors are with the Applied Physics Laboratory, The Johns Hopkins University, Laurel, Maryland 20723-6099.

Received 12 July 1993; revised manuscript received 12 October 1993.

0003-6935/94/194201-13$06.00/0.

© 1994 Optical Society of America.

temperature, and altitude profiles of both.[2–4] Because the SPIM's can sweep out a two-dimensional scene, these observations can also indicate the spatial structure of the observables. For example, observations of the Herzberg-band O_2 nightglow can outline spatial structures indicating wave motions of the upper atmosphere.[5] Spectrographic investigation of the aurora provides estimates of the fluxes and energies of the precipitating charged particles that cause the aurora, which in turn yield information about the ionosphere and magnetosphere.[6] Far-ultraviolet observations can provide such information even under sunlit conditions.[7] In the realm of astronomy, the SPIM's will undertake a measurement of the diffuse ultraviolet background of the sky.[8]

The four UVISI imagers will provide both wide and narrow field of view images and, through the use of an onboard image processor, supply information for acquiring and tracking point sources such as stars and extended sources such as aurora. With a higher time and spatial resolution than the SPIM's, the imager observations will complement those of the spectrographs. The use of coaligned imagery provides a precise measure of the position of a source in the spectrograph slits, which may be important for determining the source spectrum. A nominal time resolution of 0.5 s permits the imagers to make unprecedented observations of rapidly evolving phenomena in the upper atmosphere such as aurora.[9,10] Imager filters will permit the UVISI imager to investigate specific atmospheric processes. For example, a cross-polarizer filter on an ultraviolet imager will make the first polarization measurements of polar mesospheric clouds from space,[11] while the ratio of radiances from two narrow-band filters (one in the far-ultraviolet imager and one in the visible imager) can be used in the estimation of auroral particle fluxes and electron densities.[12]

Instruments similar to the UVISI instrument form an advanced class of intensified CCD systems that have recently become prominent in space remote sensing.[13] Early versions of these detector systems flew on long-term missions such as Voyager[14] as well as on short-term missions such as Spacelab.[15] Among the newer instruments of this type, the ultraviolet imager orbited on Sweden's Viking satellite in 1986 and provided an extremely rich sample of ultraviolet images of the dynamic aurora,[10,16] whereas the Arizona Imaging spectrograph provided spectrography and imagery of airglow and spacecraft glow from the STS-39 shuttle flight in 1991.[17,18]

The UVISI instrument itself derives from a succession of ultraviolet and visible instruments flown on orbital missions by The Johns Hopkins University Applied Physics Laboratory. The first of these, the auroral ionospheric mapper,[19] flew on the Hilat spacecraft launched in 1983, and the auroral ionospheric remote sensor[20] followed on the Polar Bear satellite in 1986. These two instruments operated at ultraviolet wavelengths and provided the first observations of the auroral oval in the daytime, confirming its continuity through 360° (Ref. 7). The Hopkins ultraviolet telescope, which was built at the Applied Physics Laboratory (APL), flew on the shuttle STS-35 mission on the Astro-1 Observatory in December 1990 and returned information on 77 astronomical ultraviolet spectra.[21] APL instruments similar to the UVISI instrument also flew on the Department of Defense series of Delta missions,[22] all of which carried ultraviolet and visible instruments built at APL. The U1 instrument on Delta 180 made the exoatmospheric observations of plume phenomena in 1986.[23] Two years later, the U2 instrument on Delta 181 observed various test objects, characterized plumes, and made detailed observations of the Earth limb at several local times.[24] In particular, the U2 sensors demonstrated the robust capabilities of intensified CCD's by observing the extreme scenes of the day, night, and twilight Earth limbs.[25,26]

Each of the UVISI sensors satisfies its design objectives by using intensified CCD's and small optics ($\sim$10-cm apertures, focal lengths $<$30 cm). The sensors achieve a spectral resolution of $\sim$1 nm or better, a time resolution as fast as 0.25 s, and an angular resolution of $\sim$100 μrad/pixel. With its improved sensitivity and spectrographic imaging capabilities, the UVISI instrument promises to continue making important observations in the field of remote sensing.

2. Instrumentation Overview

The UVISI instrument consists of a suite of five SPIM's and four imagers and their associated electronics (Fig. 1). An instrument-control processor and a telemetry formatter comprise the data-control system.

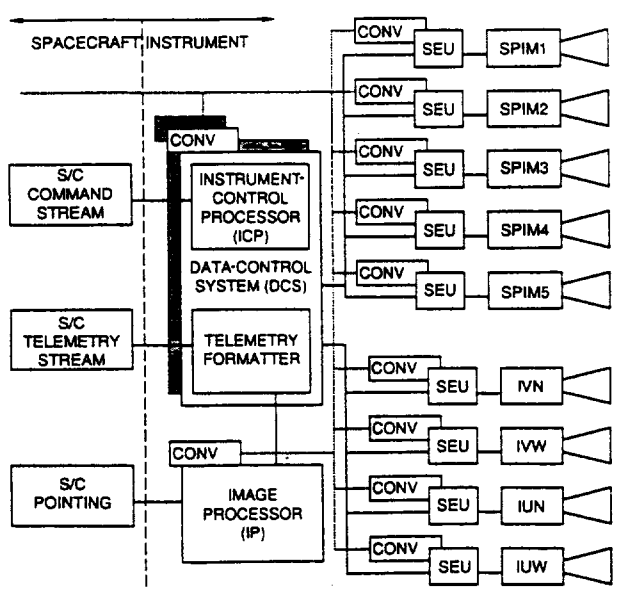

Fig. 1. Block diagram of the UVISI instrument. The solid lines indicate lines of communication (i.e., command, control, data), the dotted lines indicate lines of power, and the vertical dashed line indicates separation between the spacecraft (S/C) and the instrument systems. For redundancy, the instrument has two data-control systems, and each sensor has its own power converter (CONV) and SEM. The image processor has no redundancy.

This system sends commands from the spacecraft to the sensor electronics units, which actually control the individual sensors. Normally, the sensor electronics units operate each sensor autonomously, performing such functions as gain, gate, and filter control. The data-control system sends commands to the sensors to change modes or to turn on or shut down. The data-control system also parses sensor data to the spacecraft telemetry stream.

An image processor receives telemetry data from any one of the imagers and performs an analysis on the raw digital data. The image processor then communicates the results of its analysis with the data-control system. When programmed to do so, the data-control system can accept commands from the image processor to adjust the operation of the sensors. Finally, the image processor relays a list of potential targets of interest to the spacecraft pointing system, which weights the UVISI information with data from other sensors to determine spacecraft orientation.

The data-control system, the sensor electronic unit, and the image processor contain multiple processing units and memory. Many standard commands reside in read-only memory, and additional commands can be loaded and stored in electronically erasable programmable read-only memory. If desired, all software for the image processor program can be reloaded during flight.

The UVISI instrument employs a robust design based on redundancy and distribution of functions. Thus the data-control system has an identical back up unit that can take over control in the event that the primary system fails. Each of the nine sensors has an independent sensor electronics unit and power converter that permit the sensor to operate in the event that other units fail. Therefore, the single-point failure of one sensor by itself will only partially degrade the performance of the instrument as a whole. This design gives the UVISI instrument a projected operational lifetime of at least 4 years.

The UVISI sensors are mounted on the outside of the spacecraft platform, which can be considered a cylinder surrounded with a rectangular framework (Fig. 2). All the instruments view forward along the long axis of the cylinder and share a common boresight. The SPIM's occupy positions on a common pallet on the top of the platform, which is nominally on the surface pointed away from the Earth; the imagers occupy positions on either side of the cylinder, with fields of view oriented perpendicular to the nominal Earth horizon. The spectrograph slits lie parallel to and scan perpendicular to the Earth's horizon. The fields of view are unobstructed, and baffled sunshades on each unit limit the off-axis light scattered into the UVISI optics.

3. Spectrographic Imagers

The SPIM's satisfy several science requirements. First, they provide spectral characterization of objects within their fields of view at wavelengths from the vacuum ultraviolet (110 nm) to the near infrared (900 nm). Second, they have sufficient spectral resolution (~ 1 nm) to resolve the atomic and molecular band emissions of stellar and atmospheric sources. Third, they have sufficient spatial resolution to identify the source locations of these emissions to within a few kilometers at ranges of ~ 1000 km. Fourth, they operate sufficiently quickly that they can temporally resolve rapid atmospheric phenomena on time scales of a few seconds. Last, they can measure emissions from local molecular contaminants, particularly water (which is detected when solar ultraviolet

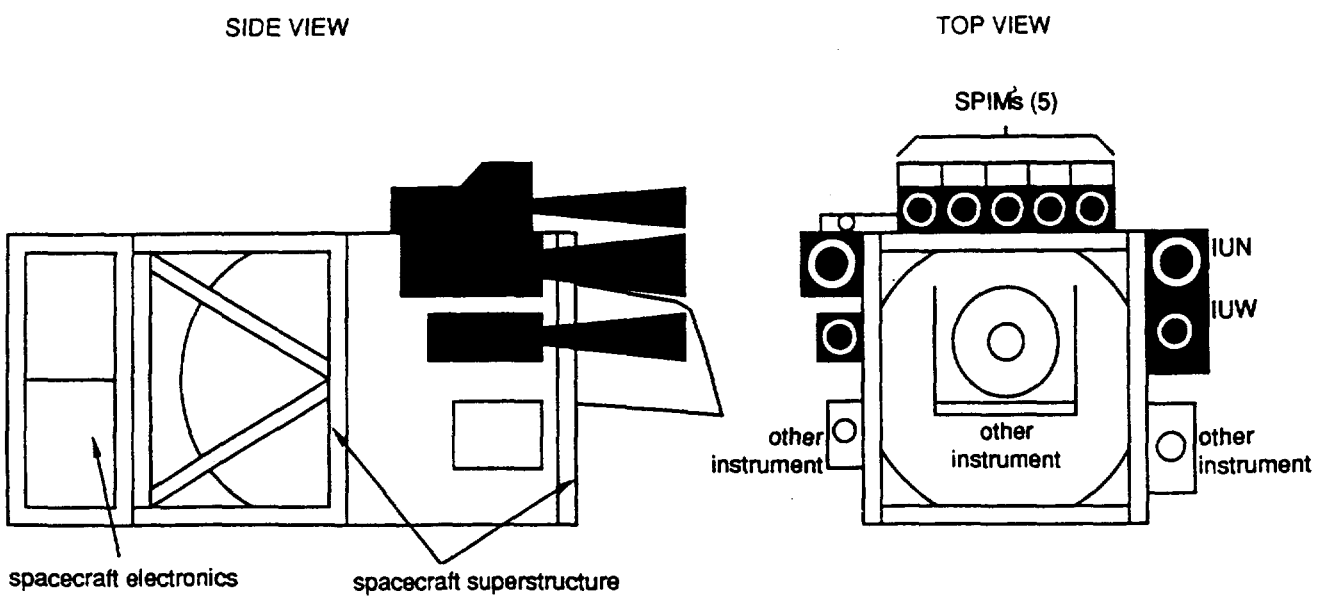

Fig. 2. Location of the UVISI sensors on the spacecraft platform. All sensors are coaligned and face in the forward direction. Spacecraft apparatus such as antennas and solar panels are omitted for clarity. In the nominal spacecraft orientation, the Earth would be at the bottom of the figure and the sky would be at the top.

causes H_2O to dissociate to OH*), as an adjunct to an onboard contamination experiment.

Figure 3 shows a schematic drawing of a UVISI SPIM. The SPIM's share a Wadsworth design consisting of a sunshade, a scanning telescope mirror, a slit-filter mechanism, a collimating mirror, a spherical grating, a two-dimensional focal plane assembly, and an electronics package called a sensor electronics unit. The telescope mirror collects incident light and images the scene on a selectable slit-filter mechanism. The slit-filter mechanism provides one of five possible configurations: a wide 0.1° slit with no attenuating filter (for low-intensity sources), a narrow 0.05° slit with no attenuating filter (for better spectral resolution), a wide slit with an attenuating neutral-density filter (neutral density ~1%), a narrow slit with an attenuating filter, and an opaque or closed filter that acts as a shutter. A spherical grating disperses the light in wavelength and focuses it onto an array of 272 × 40 pixels on the focal plane. The 272 elements represent a spectral dimension perpendicular to the slit, whereas the 40 elements represent the spatial dimension along the length of the slit. Sensor electronics can sum these pixels and sample the spectral dimension in groups of 272, 136, or 68 pixels and the spatial dimension in groups of 40, 20, 10, or 5 pixels (telemetry limitations permit only certain combinations of these groups). In conjunction with a particular slit, each sample represents a spectrum over an instantaneous field of view of either 1.0° × 0.05° or 1.0° × 0.10°. The sampling can be performed at a nominal rate of 2 Hz or at a fast rate of 4 Hz.

The scanning motion of the primary mirror sweeps the instantaneous field of view perpendicular to the slit and measures a second spatial dimension orthogonal to the slit's long dimension (see Fig. 4). Depending on the slit size, this scanned dimension effectively produces either 10 or 20 pixels in this direction. The mirror scans the field of regard in discrete increments of either 0.05° or 0.10° (i.e., the mirror stops scanning within each accumulation interval) so that the instrument can sample an unblurred, spatially contiguous scene of up to 1.0° × 1.0°. The mirror can dwell at a given angular position in its scan or dither between several adjacent scan steps. The limits of scanning can be adjusted so that the instrument samples any 1° region within a 1.2° total scan angle; this feature permits in-flight adjustment for small errors in alignment.

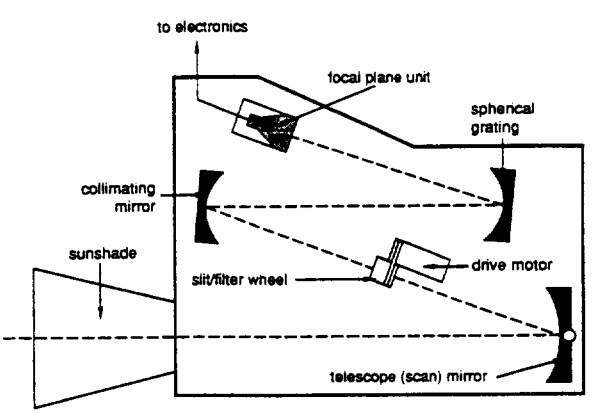

Fig. 3. Schematic diagram of a SPIM. All SPIM's have a common design and differ only in grating and in photocathode and window materials.

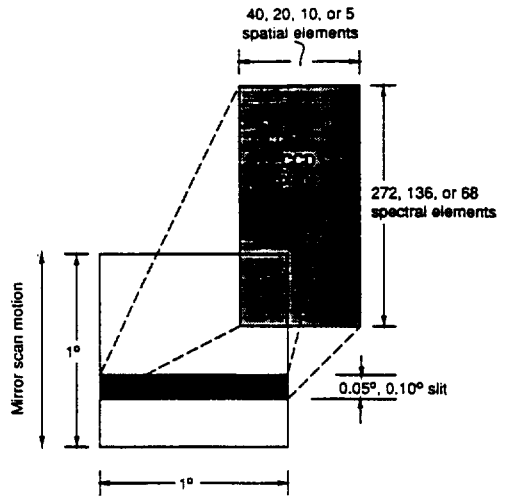

Fig. 4. Schematic illustration of how a SPIM constructs a two-dimensional image by scanning the slit through a 1° field of regard. Onboard electronics sums pixels in the focal plane to produce the combinations shown. Available space in telemetry may constrain the possible combinations of these array sizes.

All-aluminum construction minimizes thermal effects that can result from differential solar heating of the spacecraft. Mirrors, gratings, housings, fixtures, and mounting pallets all consist of aluminum and have identical coefficients of thermal expansion. This type of construction permits the SPIM's to operate at mean temperatures between −30 °C and −10 °C without serious degradation in optical performance from that at room temperature. That is, within this nominal operating regime, the optics and focal plane maintain focus and alignment to within 0.1 mm. A longitudinal thermal gradient of up to 10 °C and a lateral gradient of up to 5 °C can also exist on the pallet without degrading performance. In the most extreme case (for SPIM 1), a gradient of 10 °C would cause a spectral shift of less than 0.5 nm. Such a robust thermal design actually permits the sensors to be aligned at room temperature for operation at −30 °C.

Each SPIM shares a similar off-axis design differing only in mirror coating and grating characteristics. The telescope (scan) mirror is parabolic with a vertex radius of 800 nm, whereas the collimating mirror is parabolic with a vertex radius of 666.67 mm. Both are used off axis with a common optic axis. The concave diffraction grating has a 500-mm radius of curvature. Each grating is mechanically ruled and has a different line spacing so that the desired dispersions of the individual spectrographs are achieved. With 2572 lines/mm, the grating for SPIM 1 represents a state-of-the-art construction for far-ultraviolet spectroscopy. All gratings have surface

accuracies high enough so that, at their central wavelengths, ~90% of the energy of a parallel incident beam would produce at the focus a blur circle not more than ~0.025° in angular diameter. All optical elements are coated with reflective aluminum and have overcoatings of SiO_2 for visible wavelengths or MgF_2 for ultraviolet wavelengths. In SPIM 2 through SPIM 5, long-pass filters located past the slit eliminate higher spectral orders; in SPIM 1, the detector's MgF_2 coating eliminates higher orders.

Table 1 summarizes SPIM performance characteristics. Each column indicates the performance of one SPIM. The first row gives the nominal dispersion, and the second row gives the spectral resolution determined by the Rayleigh criterion. The sensitivity row indicates the minimum flux in one spectral bin (i.e., dispersion/272 pixels) required at the aperture to four photocathode events per accumulation. The next two rows indicate the photocathode and window materials; the coatings, the window, and the photocathode materials were optimized for the particular wave band of each SPIM. Here A_d indicates the effective aperture area and Ω_p indicates the geometric size of one spatial pixel.

The expected scene and the spacecraft recording rate dictate the various combinations of spatial–spectral pixels and slit sizes. At the nominal 2-Hz data rate, a single SPIM can transmit a full 1.0° × 1.0° scene in 10 s with a spatial resolution of 0.05° and a spectral resolution of ~1 nm. Each SPIM operates independently, so one SPIM could scan across a full 1.0° × 1.0° scene while another could dither within a few individual spatial pixels.

4. Imagers

The UVISI imaging science requirements dictate both a high spatial resolution and a wide field of view, which can be satisfied by the employment of imagers with narrow fields of view (NFOV) and imagers with wide fields of view (WFOV). One NFOV–WFOV imager pair operates in the ultraviolet and one operates in the visible; each imager must satisfy different requirements. The NFOV imagers must have a field of view and pixel size similar to those of other instruments onboard and must operate with low instrument background noise per pixel, so that faint objects such as stars and other faint point sources can be detected. The WFOV imagers must provide tracking of atmospheric and auroral features during both sunlit and dark conditions, instantaneously view the complete Earth limb, and participate in contamination assessment. The NFOV imagers, particularly the ultraviolet imager, must have sufficiently good spectral out-of-band rejection to ensure that red leak from longer-wavelength radiation does not corrupt measurements of the scene spatial content. Coincident with this spectral rejection, the NFOV imagers must have sufficient angular resolution to observe spatial variations of scene radiance at a scale of ~100 μrad. Science requirements also dictate that each set of NFOV–WFOV imagers make observations in both the visible and ultraviolet. In particular, much scientific and defense interest will focus on scene clutter measurements made by the middle ultraviolet imager.

In addition, all imagers must share several common features. All must have a fairly wide dynamic range to accommodate the observation of day limb, night limb, and celestial scenes. All imagers must sample fast enough to observe target and background dynamics, which can occur on time scales as fast as ~1 s. The imagers must also have a good off-axis rejection so that bright objects outside their fields of view do not overwhelm less bright objects within their fields of view.

Cost and weight considerations necessitated three different designs for the imagers. Figure 5 shows the schematic design of the UVISI NFOV imagers. Both the NFOV ultraviolet imager (IUN) and the visible NFOV imager (IVN) have the same design, which utilizes reflecting optics. Each imager consists of a sunshade, primary and secondary mirrors, a filter-wheel mechanism, a focal plane unit, and an associated sensor electronics unit (SEU). The IUN operates in the middle ultraviolet (180–300 nm), and the IVN actually operates from the near ultraviolet to

Table 1. Spectrographic Imager Performance

	SPIM				
Unit	1	2	3	4	5
$\lambda_1 - \lambda_2$ (nm)	110–170	165–258	251–387	381–589	581–900
$\Delta\lambda$ (nm)					
0.10° slit	0.8	1.2	1.8	2.8	4.3
0.05° slit	0.5	0.9	1.5	2.1	2.9
Sensitivity (photons/cm^2 s)	5	2	3	1	1
Photocathode	CsI	RbTe	KCsSb	Ext S20	Ext S20
Window	MgF_2	MgF_2	SiO_2	SiO_2	SiO_2
Total dynamic range			2^{42}		
Spatial resolution (sr)			3.81×10^{-7} (0.05° slit) or 7.62×10^{-7} (0.10° slit)		
Field of view			0.10° × 1.00° or 0.05° × 1.00°		
Collecting area (A_d)			110 cm^2		
Sampling time			0.50 s (nominal) or 0.25 s (fast)		
Scan time (1.0°)			5 s (at 4 Hz) or 10 s (at 2 Hz)		

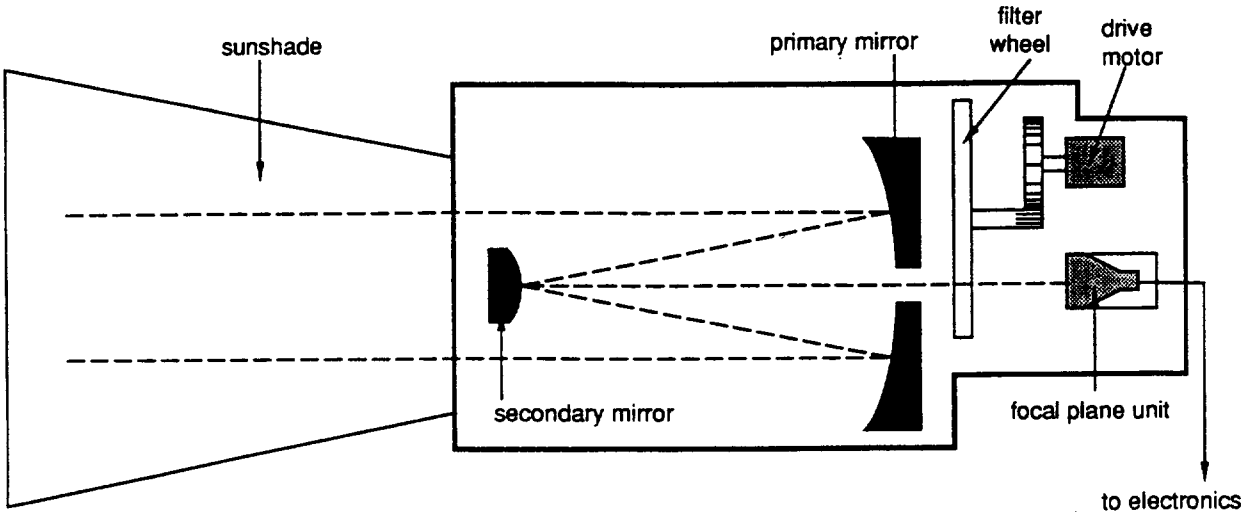

Fig. 5. Schematic diagram of the two UVISI NFOV imagers. One imager operates in the middle ultraviolet (180–300 nm), and the other operates from the near ultraviolet to the far infrared (300–900 nm).

the near infrared (300–900 nm). Both narrow-field imagers have a field of view of 1.28° × 1.59°.

The NFOV imagers use a Cassegranian telescope to collect light and direct it through a filter wheel to the sensor array. The parabolic primary mirror has a diameter of 140 mm and a radius of curvature (concave) of 723.26 mm; its inner hole is 44 mm in diameter. The hyperbolic secondary mirror has a diameter of 50 mm and a radius of curvature (convex) of 292 nm. As with the spectrographs, the NFOV imagers are built primarily of aluminum (aluminum mirrors, housing, and fixtures). The mirrors consist of an aluminum substrate coated with electroless nickel. The polished reflecting surface is coated with high-reflectance aluminum with a MgF_2 overcoating. The mirrors have a minimum reflectance of ~85% in the ultraviolet and ~90% in the visible. The mirror surfaces have an accuracy of ~0.3 waves (visible). All-aluminum construction gives the NFOV imagers robust thermal characteristics. The imagers will remain in focus in the normal operating range of −10 °C to −30 °C; they will also remain in focus against thermal gradients of up to 10 °C across any direction of their housing.

Figures 6 and 7 show the schematic designs for the UVISI WFOV imagers. The far-ultraviolet WFOV imager (IUW, Fig. 6) uses a three-mirror system to collect and focus light, whereas the visible WFOV

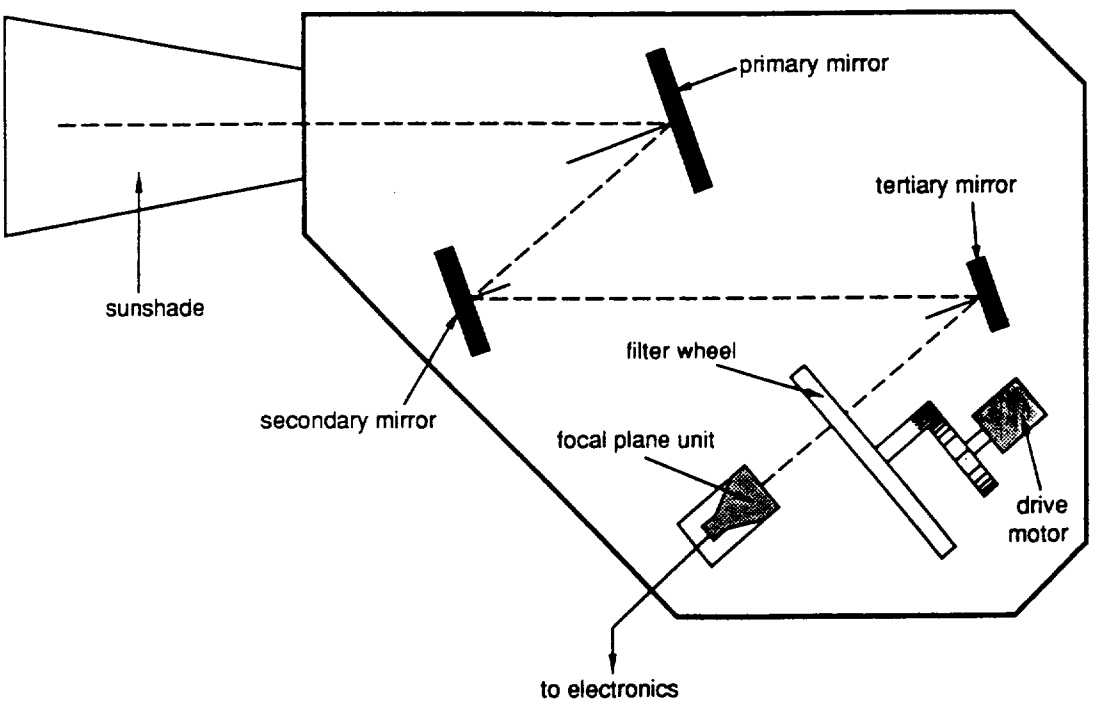

Fig. 6. Schematic diagram of the IUW, which operates in the far ultraviolet (110–180 nm).

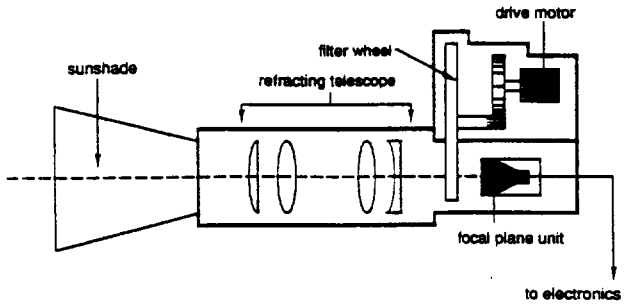

Fig. 7. Schematic diagram of the IVW, which operates from the visible to the near infrared (380–900 nm).

imager (IVW, Fig. 7) uses a five-element refracting telescope with radiation-resistant glasses. Refractive optics in the visible imager permit a lighter, more cost-effective unit; the ultraviolet imager, however, requires reflective optics because lens transmissivity degrades severely at shorter wavelengths. The IVW operates from the visible to the near infrared (380–900 nm), and the IUW operates in the far ultraviolet (110–180 nm). Both wide-field imagers have a field of view of 10.5° × 13.1°.

Sunshade design, internal baffling, and optical cleanliness during imager fabrication minimize off-axis light scattering onto the focal planes of all the imagers. Figure 8 shows the expected point-source transmittance for stray light for the NFOV and WFOV ultraviolet imagers. Outside the fields of view, the transmittances drop 4–5 orders of magnitude. To achieve this off-axis performance, the NFOV imagers use cylindrical baffles at both mirrors and a two-stage sunshade with vanes. As a way to maintain mirror cleanliness, the imagers (and the SPIM's) are assembled in a class 100 environment [i.e., fewer than 100 particles/ft^3 (3500 particles/m^3) of particles 0.5 μm in size, which compares to a typical surgical operating room of class ~100,000]. The design and the cleanliness precautions ensure that the scatter contribution is approximately no worse than that caused by mirror surface roughness.

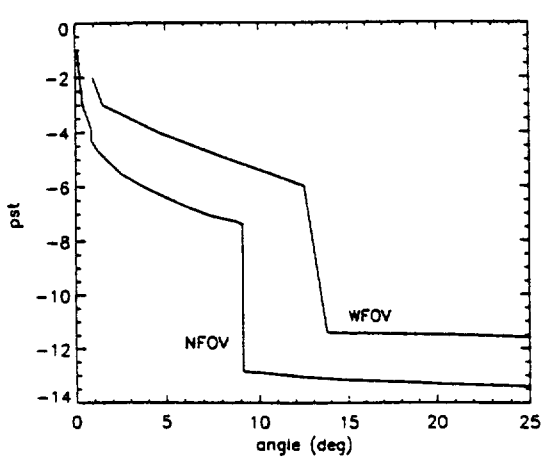

Fig. 8. Point source transmittance (pst, off-axis rejection) for the narrow- and wide-field ultraviolet imagers. The large drop-offs at ~9° and ~12° are caused by the sunshades.

Each imager has a six-position filter wheel that can be rotated so that an appropriate filter is selected. The filters have been chosen so that the observation of expected phenomena is optimized. Each wheel contains an open, full-wave-band filter for unattenuated viewing, a closed filter for protecting the electro-optical detector and for measuring instrument noise, and a neutral-density filter for full-wave-band observation of bright scenes. Rays converging through WFOV filters make angles less than 12° from the normal (which may appear to shift some of the narrower wave bands toward the blue), whereas rays converging through NFOV filters make angles less than 1.5° from the normal (which will have a negligible effect on the filter wave bands). Visible imagers have a neutral density 4 ($\times 10^{-4}$) attenuating filter, whereas ultraviolet imagers have a neutral density 3 ($\times 10^{-3}$) filter. The other filters select particular wave bands of interest. For example, the 200- to 230-nm filter (filter 4) in the IUN selects NO gamma bands for airglow measurements and nadir scene clutter. (The combination of filter cutoff and falling photocathode response should render the middle-ultraviolet filters impervious to the red leak of reflected solar radiation longward of 300 nm.) The 145- to 180-nm filter (filter 4) on the IUW screens out the bright Ly-α (121.4 nm) and oxygen emissions (130.4 nm) of the dayglow and permits the viewing of aurora emissions during the daytime. The 426- to 429-nm filter of the IVW selects the 428-nm emission of the N_2^+ (1N) system, which is prominent in airglow.

Two of the imager filters make UVISI unique among space-imaging experiments. A clear lens (filter 6) on the IVW provides a near-field focus of ~10 m for observing small particulates that may drift through the field of view. This lens is used in conjunction with an experiment that performs on-orbit measurements of particulate contaminants having sizes down to ~5 μm. A cross-polarization filter (filter 6) on the IUN permits evaluation of scattering properties of atmospheric particulates (one half of this filter is polarized 90° to the other half). The polarization filter will be used in the observation of polar mesospheric clouds, which are composed of ice crystals floating in the upper atmosphere. Polarization measurements can reveal the sizes and size distributions of such particles.

The UVISI imagers operate in a starting mode in which one full frame of data is accumulated all at once. No scene scanning takes place that might time bias a measurement. Each imager provides one full image of 256 × 244 pixels in a 0.5-s sample time (a 2-Hz frame rate). The imagers can also operate in a fast mode that provides one partial frame (122 × 256 pixels) in a 0.25-s sample time (a 4-Hz frame rate).

Table 2 summarizes the performance of the UVISI imagers. Each column in the table represents the performance of one particular imager. The first six rows indicate the nominal (FWHM) passbands of the imagers. The next row shows the expected sensitivi-

Table 2. Imager Performance

Unit	Ultraviolet Imager		Visible Imager	
	IUN	IUW	IVN	IVW
Nominal passbands (nm)				
1, Open	180–300	110–180	300–900	380–900
2, Closed	—	—	—	—
3, Neutral-density filter	180–300	110–180	300–900	380–900
4, Wave band 1 filter	200–230	110–123	305–315	426–429
5, Wave band 2 filter	230–260	128–138	350–440	529–631
6, Wave band 3 filter	260–300	145–180	470–640	380–900
Sensitivity (photons/cm^2 s)	2	5	1	6
Photocathode	RbTe	CsI	Ext S20	Ext S20
Window	MgF_2	MgF_2	SiO_2	SiO_2
Resolution				
Field of view	1.59° × 1.28°	13.1° × 10.5°	1.59° × 1.28°	13.1° × 10.5°
Pixel size (mrad^2)	0.108 × 0.092	0.892 × 0.751	0.108 × 0.092	0.892 × 0.751
Collecting area (A_p)	130 cm^2	25 cm^2	130 cm^2	25 cm^2
Total dynamic range	2^{41}			
Sampling rate	2 Hz (256 × 244 pixels) or 4 Hz (256 × 122 pixels)			

ies calculated when one assumes a square-wave spectrum with a width of 1 nm centered on the band of each of the open sensors; again, the fluxes refer to those needed to produce four photoevents at the photocathode. The following two rows give the photocathode material and its window material. The resolution rows indicate the full field of view and the geometric size of one pixel; the wide-field imagers have fields of view approximately 100 times as large as those of the narrow-field imagers. The collecting area refers to the effective collecting areas. The dynamic range row breaks down the several factors that give a total maximum dynamic range of 2^{41}–10^{12}. The final row indicates the time between successive frames or samples. Note that an increase in the sampling rate reduces the size of the image.

5. Electro-Optical Detectors

Both the imagers and the SPIM's utilize similar electro-optical detectors or focal plane units. Each detector consists of an image intensifier with a V-shaped microchannel plate, a green phosphor screen, a fiber-optic reducer, and a CCD that converts photons to electrical signals. Figure 9 illustrates the basic configuration of each focal plane unit. Light from the optical system strikes the photocathode at the focal plane and is converted into electrons. A high voltage across the microchannel plate cascade multiplies the electrons, which accelerate to a phosphor screen immediately behind the microchannel plate. The phosphor emits green light, which travels through a fiber-optic reducer to the CCD, which converts the light into an electronic signal for processing. Similar intensified devices have previously been flown.[13,26]

The Thompson TH7866 CCD used by the UVISI instrument has an active area of 6.6 mm × 8.8 mm, whereas the microchannel plate measures 40 mm in diameter. This size mismatch necessitates the use of a fiber-optic coupler with a 4.5:1 taper. Furthermore, the coupler has a circular footprint and the CCD has a rectangular shape, so a few CCD pixels at the corners of the imager arrays obtain no optical signal (see Fig. 9). However, the signal from the corners can be exploited as a way to determine the CCD zero offset, which must be subtracted from scene pixels. Exposure to radiation in space may cause the coupler transmissivity to degrade slowly

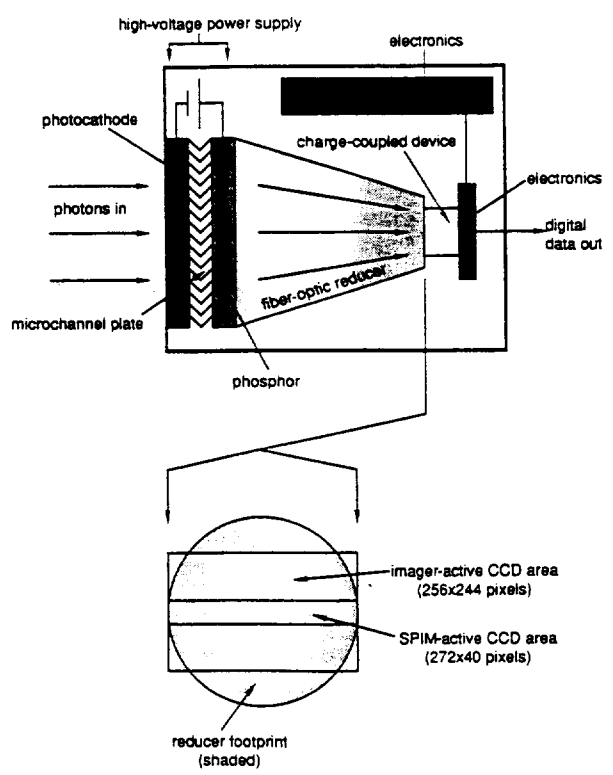

Fig. 9. Schematic diagram of a UVISI focal plane unit. All focal plane units have the same design and differ only in window and photocathode materials. Focal plane unit electronics report 12 bits per pixel to the data-control system.

over the lifetime of the instrument. The microchannel plate gain can be used for compensation of this effect, and periodic in-flight recalibration will monitor the degradation. A 2-mm-thick aluminum box houses the entire image intensifier unit, including the digitizing electronics, which greatly reduces the effects of energetic charged particles that exist in the terrestrial magnetosphere.

To obtain as wide a dynamic range as possible, the detectors feature a dual automatic gain control. This control adjusts the voltage across the microchannel plate (gain control) and the duration of the voltage across the photocathode (gate control). One can conceive of this operation by using an analogy with a simple single-lens reflex camera: the gain controls the film speed while the gate controls the exposure time. The voltage control provides a factor of $\sim 10^4$ in dynamic range, whereas the gate control provides a factor of $\sim 10^2$. Filters provide additional factors of $\sim 10^{3-4}$. The CCD itself provides 12 bits (=4096) of intrascene dynamic range per pixel. The combination of filter, gain, and CCD produces a total dynamic range of $\sim 10^{12}$.

During normal operations, the automatic gain control sets the gain; its circuitry monitors the previous two frames to set the gain for the current frame. A sophisticated automatic gain control algorithm determines scene brightness while allowing for a (programmable) number of isolated point sources to exceed brightness limits. Selected by command, different automatic gain control thresholding schemes or gain tables optimize the gain algorithm for differing situations such as staring at a star field or scanning the daytime limb. The algorithm also provides for a safety shutdown in case the UVISI instrument suddenly views a bright scene. Finally, commands can override the automatic gain control and allow the user to set the gain manually to a constant level or step the gain through a series of levels for in-flight calibration.

The CCD operates at a nominal rate of 2 Hz (0.50-s frame time). At this rate the CCD accumulates data over $\sim$468 ms and uses $\sim$32 ms to report data and reset the gain. However, the CCD can also operate at a faster rate of 4 Hz (0.25 s). At this speed the CCD accumulates data over $\sim$218 ms and again requires $\sim$32 ms for housekeeping functions. The spectrograph focal plane units report a full 272 × 40 pixels to the data-control system, regardless of whether they are operating at the 2- or the 4-Hz rate. However, the imager focal plane units report a full 256 × 244 pixels only while operating at the 2-Hz rate; at the 4-Hz rate, the imager focal plane units report a reduced array of the central 256 × 122 pixels. In the reduced scene, however, only approximately 256 × 100 pixels contain meaningful counts because the CCD cannot be read out fast enough.

A focal plane unit reports 12 bits of data per pixel for each frame, whether the data are imager data or spectrograph data. The data-control system can compress these data to 8 bits/pixel to save space. The data-compression scheme uses a constrained maximum error method, which for 12-to-8-to-12-bit conversion preserves the data within a maximum fractional error of less than 1%. The data, whether compressed or uncompressed, are then forwarded to the MSX recorder system for later transmission to the ground. The data arrive at ground receivers in the same compressed or uncompressed format as they were recorded onboard. Ground-data processing restores the compressed data to their original 12 bits per pixel.

The Thompson CCD features antiblooming circuitry, which prevents counts in a bright or saturated pixel from overflowing into adjacent pixels and affecting the quality of an extended region of the frame.

6. Image Processing for Tracking

The UVISI instrument includes an image-processing system that can isolate likely targets in the imager fields of view and communicate their positions to the MSX flight processor. As used here, target can refer either to a point source such as a star or to an extended source such as an auroral surge. (One assumes, of course, that the scale size of a target is much less than the scale of a field of view.) The image-processing system operates in real time, and, if desired, can automatically select operating modes for the UVISI sensors based on its results.

The system accepts image data from any one of the UVISI imagers and processes them with a 1750A microprocessor and a digital signal processing 2100 chip, which is used for onboard image processing. Internal software performs initialization and tracking functions that include filtering, smoothing, thresholding, and centroiding. The image processor seeks targets based on an *a priori* target-description file containing weights for a number of target features such as size, shape, brightness, and location. The image processor transforms locations of likely targets from UVISI pixel coordinates to spacecraft coordinates and passes them to the MSX flight processor, which performs Kalman filtering of other targeting inputs to select true targets for observation.

The image processor can function when the MSX processor has no definitive track (i.e., no predicted target trajectory) information and can track either a point source or an extended source. Point-source tracking will be exercised when tracking a point source such as a star being occulted by the atmosphere, whereas extended source tracking is necessary for tracking extended sources such as auroral surges or individual polar mesospheric clouds. Because some types of targets may move rapidly or change suddenly, the image processor operates only on single frames of data.

The image processor offers considerable flexibility in its operations. The nominal processor program determines likely targets based on a number of features (e.g., size, shape, brightness, location) contained in a target-description file uploaded prior to the observation. The software maximizes target like-

lihood by weighting these various features. Thus a star source might be weighted to optimize brightness, small size, and position features, whereas an active segment of the auroral oval would be weighted to optimize elongated shape and orientation features. The expected target characteristics will determine the weighting of the various features. Obviously, more than a single target can appear in one frame of data, so the image processor can accommodate up to 23 different targets at once. If necessary, one can reprogram the entire image processor in orbit by reloading its software modules.

7. Operating Mode Options

The UVISI instrument can operate in a staggeringly large number of modes. The use of each mode depends on the phenomena under observation, on the spacecraft power budget, and on the permitted data-recording rates. The spacecraft records data at either 25 Mbits/s or at 5 Mbits/s. The UVISI instrument can output data at rates of up to 5.5 Mbits/s, and this rate is sufficient for recording data from all five SPIM's and all four imagers at a nominal frame rate of 2 Hz. However, the UVISI instrument must share the telemetry with several other instruments. In the 5-Mbits/s recording mode, each instrument has a dominant mode in which it dominates the telemetry stream. When not dominant, the UVISI instrument contributes data at a rate of 1.1 Mbits/s, which permits data from five SPIM's and one imager in the telemetry. When the UVISI instrument dominates, it contributes data at 4.4 Mbit/s, which permits two imagers and all five SPIM's. In the 25 Mbits/s recording mode, the UVISI instrument contributes data at its full 5.5-Mbits/s rate. At any of the reduced data rates below 5.5 Mbit/s, the UVISI instrument can operate in a cyclic mode that permits data from multiple imagers to appear in a commutated telemetry segment. For example, the telemetry space for one imager can alternate between containing data from the IUN and containing data from the IVW.

Table 3 summarizes the operational options for each of the UVISI SPIM's. The slit-size option permits the selection of either high spectral resolution (0.05°) or high sensitivity (0.10°). The data-compression option chooses between 8-bits/pixel compressed data used for low data rates or 16-bits/pixel uncompressed data used for more accurate counting at high data rates. Gain control features four possibilities. The automatic gain control is used when the scene intensity is unknown or changing rapidly; the step gain control is used during instrument calibration; and the fixed gain control is used when the scene intensity is known and fairly stable. In addition, the gain can be mirror locked, which means the automatic gain control is used but is based on data from a given mirror position. The number of spectral and spatial bins permits adjustment of the spectral or spatial resolution. For example, the combination of 272 spectral bins with five spatial bins gives a maximum spectral resolution and a minimal spatial resolution, whereas the combination of 68 spectral bins and 40 spatial bins yields a maximum spatial resolution and a minimum spectral resolution. Restricted recording bandwidth and formatting do not necessarily permit all possible combinations of spectral bins, spatial bins, and rates. The mirror scan angle (the full angle through which the mirror scans) may be selected anywhere within a 1.00° window in 0.05° increments; the center of this scan angle (a boresight angle) can be selected anywhere within a 1.20° window. In-flight alignment calibrations will determine this center angle to within one pixel (0.05°). Note that scanning with a 0.10° slit permits ten cross-slit spatial bins per scan, whereas scanning with the 0.05° slit permits 20 cross-slit spatial bins. Filter options include a closed (opaque) filter for protective purposes, an open filter for dim scenes, and an attenuation filter for bright scenes. The attenuation filter effectively extends the dynamic range of the instrument. For the far-ultraviolet spectrograph (SPIM 1), the attenuation filter reduces the strong Ly-α emissions of the geocorona and the OI (1304) emissions of the dayglow (while the dramatic falloff of the CsI photocathode eliminates solar backscatter at longer wavelengths). All SPIM's can operate at either a 2- or a 4-Hz frame rate (0.50- or 0.25-s sample time), although data-recording rates may prevent the use of the faster rate. Finally, each unit can be independently turned on or off as a way to conserve power, which is severely rationed on the MSX spacecraft.

Table 4 gives the corresponding operating options for the UVISI imagers. As with the SPIM's, the imagers offer two types of data compression and several filter positions. With the exception of a mirror-locked mode (which is unique to the SPIM's), the imagers have the same gain options as the

Table 3. UVISI SPIM Options

Option	Choice
Slit size	0.05° or 0.10°
Data compression	8 or 16 bits
Gain control	automatic, step, fixed, or locked
Number of spectral bins (CCD)	68, 136, or 272
Number of spatial bins (CCD)	40, 20, 10, or 5
Size of mirror scan	0.00°–1.00°
Angle of mirror scan	0.00°–1.20°
Scan step size	0.025° or 0.050°
Filter selection	Closed, open, or neutral density
Sample time	0.25 or 0.50 s
On or off	Independent

Table 4. UVISI Imager Options

Option	Choice
Data compression	8 or 16 bits
Gain control	Automatic, step, or fixed
Filter wheel	Closed, open, neutral density, or bands
Sample time	0.50 or 0.25 s
On or off	Independent

spectrographs. The imagers' 8-bit compression option permits the use of a lower data rate at the expense of a slightly reduced count precision, whereas the 16-bit option permits the full dynamic range but requires a fast data-recording rate. Each imager has a six-position filter wheel (see Table 2). Each wheel has a closed position for protection, an open position for maximum sensitivity, and a neutral-density attenuation filter (either 10^{-3} or 10^{-4}) for viewing bright scenes. The remaining filters permit the observation of various wave bands believed by investigators to have scientific merit.

8. Calibration

The UVISI calibration primarily attempts to determine those factors necessary to convert raw sensor counts into photometric units such as irradiance (photons/cm^2 s) or spectral radiance (photons/cm^2 sr nm). For point sources, which are appropriate for the imagers, the conversion equation is

$$E_{ij} = \frac{C_{ij} - D(T)}{A_d G_n Q_f U_{ij} \tau_k}, \tag{1}$$

where E_{ij} is the irradiance for pixels i and j, C_{ij} is the digital counts, $D(T)$ is the dark count offset at temperature T, A_d is the effective aperture area (in square centimeters), G_n is the gain factor for level n, Q_f is the wavelength-intergrated conversion efficiency (counts/photon) for filter f, U_{ij} is the uniformity correction for the pixel, and τ_k is the accumulation time for gate level k. One can conceive of Q_f as the photocathode quantum efficiency $\varepsilon(\lambda)$ times filter response function $R(\lambda)$, integrated over the passband:

$$Q_f = \int_{\Delta\lambda} \varepsilon(\lambda) R(\lambda) \mathrm{d}\lambda. \tag{2}$$

The integral for Q_f extends over the characteristic width $\Delta\lambda$ of the filter response, nominally the FWHM of the filter transmission curve.

For extended sources, which are appropriate for the SPIM's, the conversion equation is

$$L_{ij} = \frac{1}{\Omega_p \Delta\lambda_s} \frac{C_{ij} - D(T)}{A_d G_n R_{ij} \tau_k}, \tag{3}$$

where the terms are the same as in Eq. (1) except that R_{ij} is the response (count/photon) for spectral bin i and spatial pixel j, Ω_p is the spatial size of a pixel (steradians) and $\Delta\lambda_s$ is the spectral size of a pixel (nanometers). One can convert the radiance to Rayleighs per nanometer by multiplying by $4\pi/10^6$.

Calibration specifically consists of determining the dark count $D(T)$ as a function of temperature, the gain curve G_n as a function of level n, the filter response curves as functions of wavelength λ, the flat-field function U_{ij} and the response R_{ij} as functions of pixels i and j, and the accumulation time τ_k as a function of gate index k and the field of view. From the field of view, one can calculate the pixel size Ω_p. For the SPIM's one also requires a wavelength calibration that relates spectral bin to wavelength, which has the form

$$\lambda_i = A_0 + A_1 i, \tag{4}$$

where i is the spectral bin number and A_0 and A_1 are coefficients. The precise metric calibration of the imagers requires characterization of the distortion and alignment.

Measurement of most of the calibration factors is straightforward. The dark-count function $D(T)$ results from measurements of the residual sensor counts in a dark environment at various temperatures. The $D(T)$ is also measured at various gain levels, with the intensifiers both on and off, and as a function of detector on time. (A dark-count measurement is automatically performed at the start and end of an orbital observation, and the addition of dark measurements during an observation ensures a good measurement of the dark current.) One determines the gain and gate functions G_n and τ_k by systematically varying the gain and gate for sources of constant intensity. The wide dynamic range of the sensors requires the use of devices such as filters and masks to vary source intensities. Measurement of the response functions necessitates two approaches. For most of the SPIM's, integrating spheres provide sources of known spectral radiance that fill the field and the apertures of the sensors and permit radiometric calibration of the full spectrographic array by using only a few accumulations. SPIM 1 and the imagers rely on a calibrated monochromator beam of known irradiance for determination of response. The latter approach requires a considerable number of accumulations to sample the entire spatial–spectral space of the sensor. Both the integrating spheres and the monochromator beam were calibrated with detectors traceable to the National Institute of Standards and Technology. In all cases, the response is measured at several temperatures in the operating range and for all filter or slit combinations. One also measures the response at wavelengths well outside the nominal sensor passband to determine the possibility of wavelength leakage.

One determines the fields of view by locking each individual sensor on a precision stage, illuminating the sensor with a collimated beam, and moving the stage to known positions of azimuth and elevation. Typically, spatial calibration involves 15–20 points equally spaced on the sensor array. This calibration is carried out at several temperatures within the operating range as well as at room temperature. Knowledge of the relative azimuth and elevation angles of the stage also permits this calibration to be used in the determination of the total distortion (optical plus focal plane) of the sensors.

Each individual sensor has undergone ground calibration at the Optical Calibration Facility at The Johns Hopkins University APL. The UVISI instrument team is now analyzing the ground-calibration data. Preliminary results suggest that the sensors

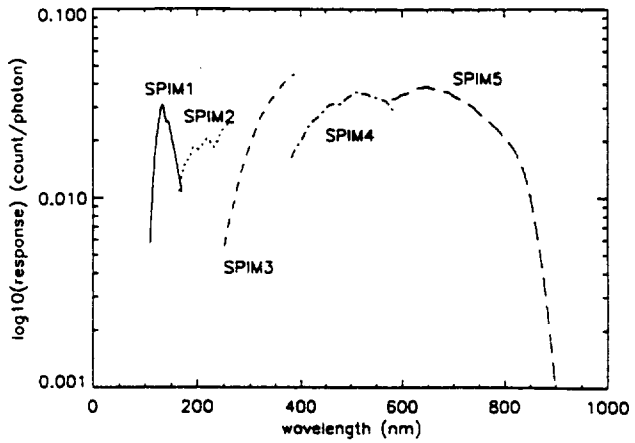

Fig. 10. Calculated response curves for the SPIM's. The curves apply to the wide slit without attenuation at maximum gain and gate. The curves include photocathode quantum efficiency, window transmissivity, grating efficiency, mirror reflectance, and any filter transmission effects.

have characteristics that agree well with their design expectations. Figures 10 and 11 show the calculated response curves of the SPIM's and the imagers.

During the mission, special calibration experiments will provide data to verify and adjust the calibrations. Because the UVISI instrument carries no calibration lamps, this in-flight calibration must rely exclusively on natural sources. For example, the known spectral irradiances of certain stars will provide radiometric recalibration, and the uniform airglow of the Earth will provide a source for checking the uniformity calibration. Gain and gate calibration use special observing modes of the sensors. So that the full dynamic range of the sensors is sampled, stars of various brightnesses will have to be sampled. The UVISI instrument team will analyze the flight calibration data and provide corrections to the calibration factors, which will undoubtedly change as the mission progresses.

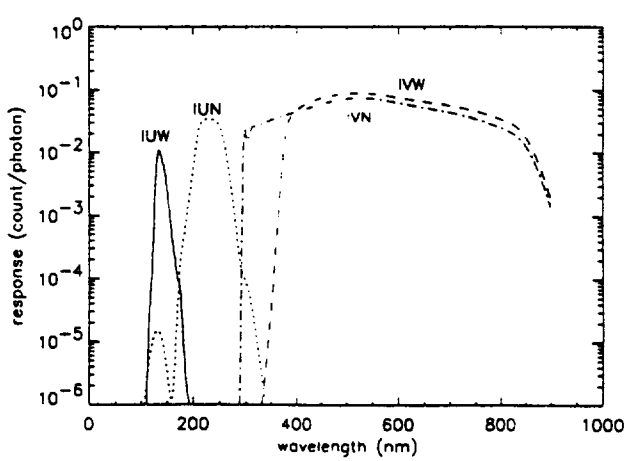

Fig. 11. Calculated response curves for the imagers. The response curves apply to the open filter positions of the filter wheels; the sensors operate at maximum gain and gate. The curves include photocathode quantum efficiency, window transmissivity, mirror reflectance, and any filter or lens transmission effects.

The authors thank the large number of supporting engineers and scientists who contributed to the development and construction of the UVISI instrument. Principal among these were K. Heffernan, instrument engineer, and J. Heiss, program manager. The UVISI instrument receives funding through the Ballistic Missile Defense Office, formerly the Strategic Defense Initiative Organization.

References

1. R. E. Heubschman and C. T. Pardoe, "The Midcourse Space Experiment Spacecraft," presented at the American Institute of Aeronautics and Astronautics 1992 Aerospace Design Conference, Irvine, California, February 1992.
2. S. C. Solomon, P. B. Hays, and V. J. Abreu, "Tomographic inversion of satellite photometry," Appl. Opt. **19**, 3409–3418 (1985).
3. R. R. Meier, "Ultraviolet spectroscopy and remote sensing of the upper atmosphere," Space Sci. Rev. **58**, 1–185 (1991).
4. D. J. Strickland, R. Link, and L. J. Paxton, "Far-UV remote sensing of thermospheric composition and the solar EUV flux," in *Ultraviolet Technology IV*, R. E. Huffman, ed., Proc. Soc. Photo-Opt. Instrum. Eng. **1764**, 117–131 (1992).
5. M. N. Ross, A. B. Christensen, C. I. Meng, and J. F. Carbary, "Structure in the UV nightglow observed from low earth orbit," Geophys. Res. Lett. **19**, 985–988 (1992).
6. D. J. Strickland, J. R. Jasperse, and J. A. Whalen, "Dependence of auroral FUV emissions on the incident electron spectrum and neutral atmosphere," J. Geophys. Res. **88**, 8051–8062 (1983).
7. C. I. Meng and R. E. Huffman, "Ultraviolet imaging from space of the aurora under full sunlight," Geophys. Res. Lett. **11**, 315–318 (1984).
8. R. C. Henry, J. Murthy, M. Allen, M. Corbin, and L. J. Paxton, "Spectroscopy and imaging of the cosmic diffuse UV background radiation," in *Ultraviolet Technology IV*, R. E. Huffman, ed., Proc. Soc. Photo-Opt. Instrum. Eng. **1764**, 61–71 (1992).
9. J. D. Craven and L. A. Frank, "The temporal evolution of a small auroral substorm as viewed from high altitudes with Dynamics Explorer 1," Geophys. Res. Lett. **12**, 465–468 (1985).
10. C. D. Anger, J. S. Murphree, A. Vallance Jones, R. A. King, A. L. Broadfoot, L. L. Cogger, F. Cruetzberg, R. L. Gattinger, G. Gustafsson, F. R. Harris, J. W. Haslett, E. J. Llewellyn, J. C. McConnel, D. J. McEwen, E. H. Richardson, G. Rostoker, B. R. Sandel, G. G. Shepherd, D. Venkatesan, D. D Wallis, and G. Witt, "Scientific results from the Viking ultraviolet imager: an introduction," Geophys. Res. Lett. **14**, 383–386 (1987).
11. G. E. Thomas and J. J. Olivero, "Climatology of polar mesospheric clouds," J. Geophys. Res. **94**, 14,673–14,681 (1989).
12. L. A. Frank and J. D. Craven, "Imaging results from dynamics Explorer I," Rev. Geophys. **26**, 249–283 (1988).
13. A. L. Broadfoot and B. R. Sandel, "Application of the intensified CCD to airglow and auroral measurements," Appl. Opt. **31**, 3097–3108 (1992).
14. A. L. Broadfoot, B. R. Sandel, D. E. Shemansky, J. C. McConnell, G. R. Smith, J. B. Holberg, S. K. Atreya, T. M. Donahue, D. F. Strobel, and J. L. Bertaux, "Overview of the Voyager ultraviolet spectrometry results through Jupiter encounter," J. Geophys. Res. **86**, 8259–8284 (1981).
15. D. G. Torr, R. W. Basedow, and G. H. Mount, "An imaging spectrometric observatory for Spacelab," Astrophys. Space Sci. **92**, 237–291 (1983).
16. C. D. Anger, S. K. Babey, A. L. Broadfoot, R. G. Brown, L. L. Cogger, R. Gattinger, J. W. Haslett, R. A. King, D. J. McEwen, J. S. Murphree, E. H. Richardson, B. R. Sandel, K. Smith, and A. Vallance Jones, "An ultraviolet auroral imager for the Viking spacecraft," Geophy. Res. Lett. **14**, 387–390 (1987).

17. A. L. Broadfoot, B. R. Sandel, D. Knecht, R. Viereck, and E. Murad, "Panchromatic spectrograph with supporting monochromatic imagers," Appl. Opt. **31**, 3083–3096 (1992).
18. B. R. Sandel, A. L. Broadfoot, B. Hatfield, E. Murad, and R. A. Viereck, "The Earth's dayglow spectrum from STS-39," Eos Suppl. **29**, 360 (1991).
19. F. W. Schenkel and B. S. Orgorzalek, "The Hilat vacuum ultraviolet auroral imager," APL Tech. Dig. **5**, 131–137 (1984).
20. F. W. Schenkel and B. S. Orgorzalek, "Auroral images from space: imagery, spectroscopy, and photometry," APL Tech. Dig. **8**, 309–317 (1987).
21. A. F. Davidson, K. S. Long, S. T. Durrance, W. P. Blair, C. W. Bowers, S. J. Conard, P. D. Feldman, H. C. Ferguson, G. H. Fountain, R. A. Kimble, G. A. Kriss, H. W. Moos, K. A. Potocki, "The Hopkins ultraviolet telescope: performance and calibration during the Astro-1 Mission," Astrophys. J. **392**, 264–271 (1992).
22. T. B. Coughlin, L. J. Crawford, J. Dassoulas, M. D. Griffin, P. E. Partridge, and M. R. Peterson, "Strategic Defense Initiative," APL Tech. Dig. **13**, 200–217 (1992).
23. M. D. Griffin and M. J. Rendine, "Delta 180/Vector Sum: the first powered space intercept," presented at the AIAA 26th Aerospace Sciences Meeting, Reno, Nev., 11–15 January 1988.
24. B. B. Holland, J. C. Ray, and A. J. Green, "Delta 181, the Thrusted Vector Mission," presented at the AIAA 27th Aerospace Sciences Meeting, Reno, Nev., 11–15 January 1989.
25. J. S. Hansen, G. H. Fountain, S. A. Gary, T. J. Harris, K. L. Harrison, S. E. Hawkins III, "Ultraviolet spectrographs using linear array technology," in *Ultraviolet Technology III*, R. E. Huffman, ed., Proc. Soc. Photo-Opt. Instrum. Eng. **1158**, 155–162 (1989).
26. J. F. Carbary and C. I. Meng, "Limb profiles from low Earth orbit," in *Ultraviolet Technology III*, R. E. Huffman, ed., Proc. Soc. Photo-Opt. Instrum Eng. **1158**, 155–162 (1989).

STATUS OF INTERNATIONAL AGREEMENTS

STAN HUMPHRIES
OFFICE OF EXTERNAL RELATIONS
NATIONAL AERONAUTICS AND SPACE ADMINISTRATION

FEBRUARY 22, 1995

ACCESS TO U.S. OCEAN COLOR DATA

Coastal Zone Color Scanner (CZCS) - Aboard the U.S. Nimbus-7 satellite from 1978 to 1986.

- Available to any requestor at the lowest possible cost, not to exceed the marginal cost of fulfilling the individual user request. Full data set available from GSFC DAAC; 9 other archives holding Level 1 and 2 (reduced resolution) and Level 3 data.

Sea-viewing Wide Field-of-view Sensor (SeaWiFS) - Instrument on Orbital Sciences Corporation (OSC) SeaStar spacecraft, scheduled to be launched September 1995

- NASA has contracted with OSC for the research use of a 5-year ocean color data set.
- Researchers may request and be granted authority by NASA to receive data from the NASA SeaWiFS archive; such data will be provided to researchers 2-4 weeks after data acquistion.
- Researchers may request and be granted authority by NASA to directly receive encrypted data (1 km resolution) broadcast by the SeaWiFS/SeaStar satellite as it passes overhead. Stations licensed by NASA under this arrangement receive decryption codes to permit data processing 2-4 weeks following data acquisition.
- Redistribution by researchers is limited to other NASA-approved researchers
- Under special circumstances, NASA may grant a temporary (2 week) real-time license to a ground station for support of specific authorized research users.
- Operational and commercial users must apply for a license to OSC directly.

ACCESS TO U.S. OCEAN COLOR DATA (con't)

Moderate-Resolution Imaging Spectroradiometer (MODIS) - Instrument on NASA EOS-AM1, scheduled to be launched in 1998, and EOS-PM1, scheduled for launch in 2000.

- All EOS data will be made available to any requestor at the lowest possible cost, not to exceed the marginal cost of fulfilling the individual user request.

BMDO MSX - DOD satellite scheduled for launch May 1995 timeframe

- NASA-DOD MOU for access to data still be negotiated
- NASA science working group will be established to develop guidelines for access to data

Hyper-Spectral Imager (HSI) - Instrument on NASA Lewis Smallsat, scheduled for launch June/July 1996.

- NASA owns all data per contract
- Commercial partners' data rights still being negotiated
- All data acquired will be available for research use
- Research users authorized through SSTI RFP

AGREEMENTS FOR U.S. ACCESS TO SPECIFIC FOREIGN OCEAN COLOR DATA SETS

Ocean Color Temperature Scanner (OCTS) - NASDA instrument aboard Japanese Advanced Earth Observation Satellite (ADEOS).

- Data exchange as per IEOS Data Exchange Principles included as part of the NASA-NASDA ADEOS Memorandum of Understanding.
- All ADEOS data available to NASA and NOAA and their designated users at the lowest possible cost for non-commercial use in the following categories: Research, Applications, and Operational Use for the Public Benefit.
- Users for Research and Applications Use are selected through Announcements of Opportunity or similar processes.

AGREEMENTS FOR U.S. ACCESS TO SPECIFIC FOREIGN OCEAN COLOR DATA SETS (con't)

Polarization and Directionality of the Earth's Reflectance (POLDER) - French (CNES) instrument aboard Japanese Advanced Earth Observation Satellite (ADEOS).

- NASDA-CNES MOU for POLDER defines POLDER data policy; NASDA-NASA MOU provides U.S. access to all ADEOS data consistent with IEOS Data Exchange Principles and NASDA-CNES MOU.
- POLDER standard data products will be available for the following non-commercial uses: internal NASDA and CNES use; use by International POLDER Science Team; and other non-commercial data use.
- All POLDER data provided to users for non-commercial data use is provided under a standard "license for use." This license protects against redistribution to third parties and unauthorized use (i.e. commercial use).
- POLDER standard products will be made available to users for non-commercial data use at no more than the marginal cost of fulling the specific user request (members of POLDER Science Team receive data and products free of charge).

AGREEMENTS FOR U.S. ACCESS TO SPECIFIC FOREIGN OCEAN COLOR DATA SETS (con't)

Modular Optoelectronic Scanning Spectrometer (MOS A/B) - DARA instrument aboard Russian Priroda module on Mir.

- Priroda data currently available only to Principal Investigators
- NASA interested in obtaining data via NASA-DARA agreement

Medium Resolution Imaging Spectrometer (MERIS) - ESA instrument on ESA Envisat mission.

- NASA and ESA will complete an agreement providing for the exchange of ENVISAT and EOS-AM1 data, based on the IEOS Data Exchange Principles.

Global Imager (GLI) - NASDA instrument on ADEOS-2

- NASA-NASDA ADEOS-2 MOU, incorporating IEOS DEP, is in negotiation.

U.S. COOPERATIVE ACTIVITIES IN DATA SYSTEM INTEROPERABILITY

GOAL: To coordinate development of U.S. and foreign data and information systems so as to facilitate system interoperability. This goal demands attention in the following areas:

1. Definition, development, and commitment to the use of standards
2. Definition and development of user and system interfaces based on those standards
3. Identification and description of user requirements for access to and utilization of each other's data and information systems
4. Establishment of network connections to accomodate the flow of data; and
5. Collaboration in data set algorithm development.

Bi-lateral Interoperability Agreements:

- NASA-NASDA Interoperability Agreement linking NASA EOSDIS and NASDA EOIS
  -- Pilot projects to be identified

- NASA-DARA Interoperability Agreement linking NASA EOSDIS and DARA/DLR ISIS
  -- Specific data sets to be made available can be agreed on a case-by-case basis

- U.S. and Russia have agreed to establish interconnectivity between EOSDIS and Russian data and information systems, and to exchange Earth science data. Details are being worked out. Goal is to have full plan agreed by June/July 1995 (next GCC). Likely nodes are Roshydromet and Russian Academy of Science/IRE.

U.S. COOPERATIVE ACTIVITIES IN DATA SYSTEM INTEROPERABILITY (con't)

Collaboration on Data System Integration:

- U.S.-Japan Global Observation Information Network (GOIN) initiative
- CEOS CINTEX
- CEOS WGINS

OTHER COOPERATION

NASA-NASDA Ocean Color Collaboration

5/5/94 NASA/Kennel letter to NASDA/Tateno proposing closer collaboration in the area of ocean color research. Specific areas identified include:

- Regional distribution by NASDA to researchers of SeaWiFS LAC data received at Japanese institutions under license from NASA, and GAC data received by NASA. Researchers must receive license from NASA.
- Regional distribution by NASA to researchers of OCTS LAC and GAC data. Researchers must receive license from NASDA.
- Development of coordinated plan for joint in-flight calibration and validation, and pre-flight cross calibration between the two instruments.
- Development of a joint field program aimed at validating the sensors, developing in-water and atmospheric algorithms for processing of data, and developing applications.
- Exchange of ancillary data, including hydrographic profiles, wind fields, and other relevant data necessary for proper adjustment of regional atmospheric and bio-optical algorithms.
- All aspects to be coordinated through joint science team meetings.

Committee on Earth Observation Satellites (CEOS)

Created in 1984 to coordinate all spaceborne Earth observation missions

Members

CSA (Canada)	NASA (US)	EUMETSAT (Europe)	NRSCC (China)
CNES (France)	NOAA (US)	SNSB (Sweden)	NSAU (Ukraine)
ESA (Europe)	BNSC (UK)	ROSHYDROMET (Russia)	EU (Europe)
ISRO (India)	ASI (Italy)		
INPE (Brazil)	DARA (Germany)	RSA (Russia)	
STA (Japan)	CSIRO (Australia)	CAST (China)	

Observers

NSC (Norway)	CCRS (Canada)	CRI (New Zealand)	OSTC (Belgium)

Affiliates

ICSU	WCRP	GCOS	OOSA (United Nations)
IGBP	WMO	GOOS	
IOC	UNEP	FAO	

EOSDIS and Ocean Color Data Exchange

Martha Maiden
NASA Headquarters

Multisensor Ocean Color Workshop
February 22-24, 1995

U.S. COOPERATIVE ACTIVITIES IN DATA SYSTEM INTEROPERABILITY

GOAL: To coordinate development of U.S. and foreign data and information systems so as to facilitate system interoperability. This goal demands attention in the following areas:

1. Definition, development, and commitment to the use of standards
2. Definition and development of user and system interfaces based on those standards
3. Identification and description of user requirements for access to and utilization of each other's data and information systems
4. Establishment of network connections to accomodate the flow of data; and
5. Collaboration in data set algorithm development.

Bi-lateral Interoperability Agreements:

- NASA-NASDA Interoperability Agreement linking NASA EOSDIS and NASDA EOIS
  -- Pilot projects to be identified

- NASA-DARA Interoperability Agreement linking NASA EOSDIS and DARA/DLR ISIS
  -- Specific data sets to be made available can be agreed on a case-by-case basis

- U.S. and Russia have agreed to establish interconnectivity between EOSDIS and Russian data and information systems, and to exchange Earth science data. Details are being worked out. Goal is to have full plan agreed by June/July 1995 (next GCC). Likely nodes are Roshydromet and Russian Academy of Science/IRE.

EOSDIS Science Advisory Process

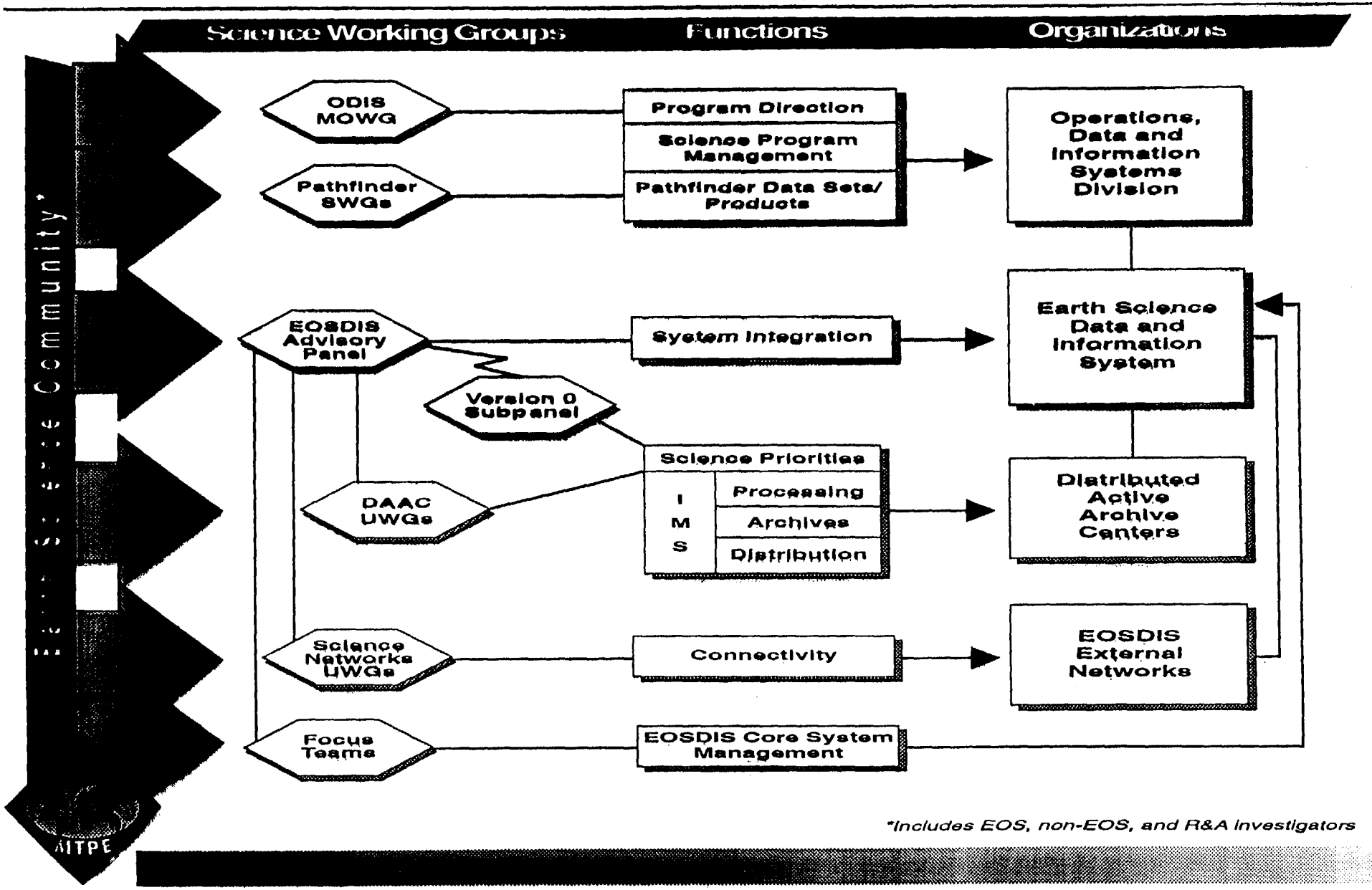

*Includes EOS, non-EOS, and R&A Investigators

EOSDIS and Ocean Color Data Exchange, cont.

Known Data Priorities of EOSDIS Users

- OCTS
  - GSFC DAAC plans to be North America distribution site
  - GSFC DAAC to receive "subscription copy" of L3 data
  - OCTS being produced in HDF format similar to SeaWiFS
  - Status: working with Japanese to understand data set details
- MOS-Obsor
  - NASA EOSDIS Version 0 interoperable with DLR ISIS
  - NASA has expressed interest in access to MOS data
  - MOS data will reside at DLR/Neustalitz, at ISIS node

EOSDIS and Ocean Color Data Exchange, cont.

International Earth Observing System Data Exchange

- For Ocean Color, includes MERIS on Envisat and GLI on ADEOS , and follow-ons
- IEOS Data Exchange Principles
  - No period of exclusive access
  - Data to be available at lowest possible cost for non-commercial use
- IEOS Implementation Plan presently being written
  - details data exchange implementation
  - data acquisition requests to be honored by Partner agencies for regional data takes
  - bilateral agreements will be attached to the Plan

EOSDIS and Ocean Color Data Exchange, cont.

- MODIS

  - Levels 1, 2, and 3 suite of ocean color and related products including SST
  - 1-4 km resolutions (TBD)
  - EOSDIS will provide data on -line according to EOS data policy

EOSDIS and Ocean Color Data Exchange

GSFC DAAC has EOSDIS responsiblity for ocean color data

- Contact: Becky Farr, Lead, Ocean Color Data Support Team, farr@daac.gsfc.nasa.gov

Present Plans:

NASA MO&DA Supported Data

- SEAWIFS
  - GSFC DAAC will distribute all GAC, and LAC from 5 North American coastal stations
  - Levels 1,2,3 data will be provided, abiding by data policy
  - DAAC will have on-line capabilites to step through approval process to order data

EOSDIS Data is Distributed

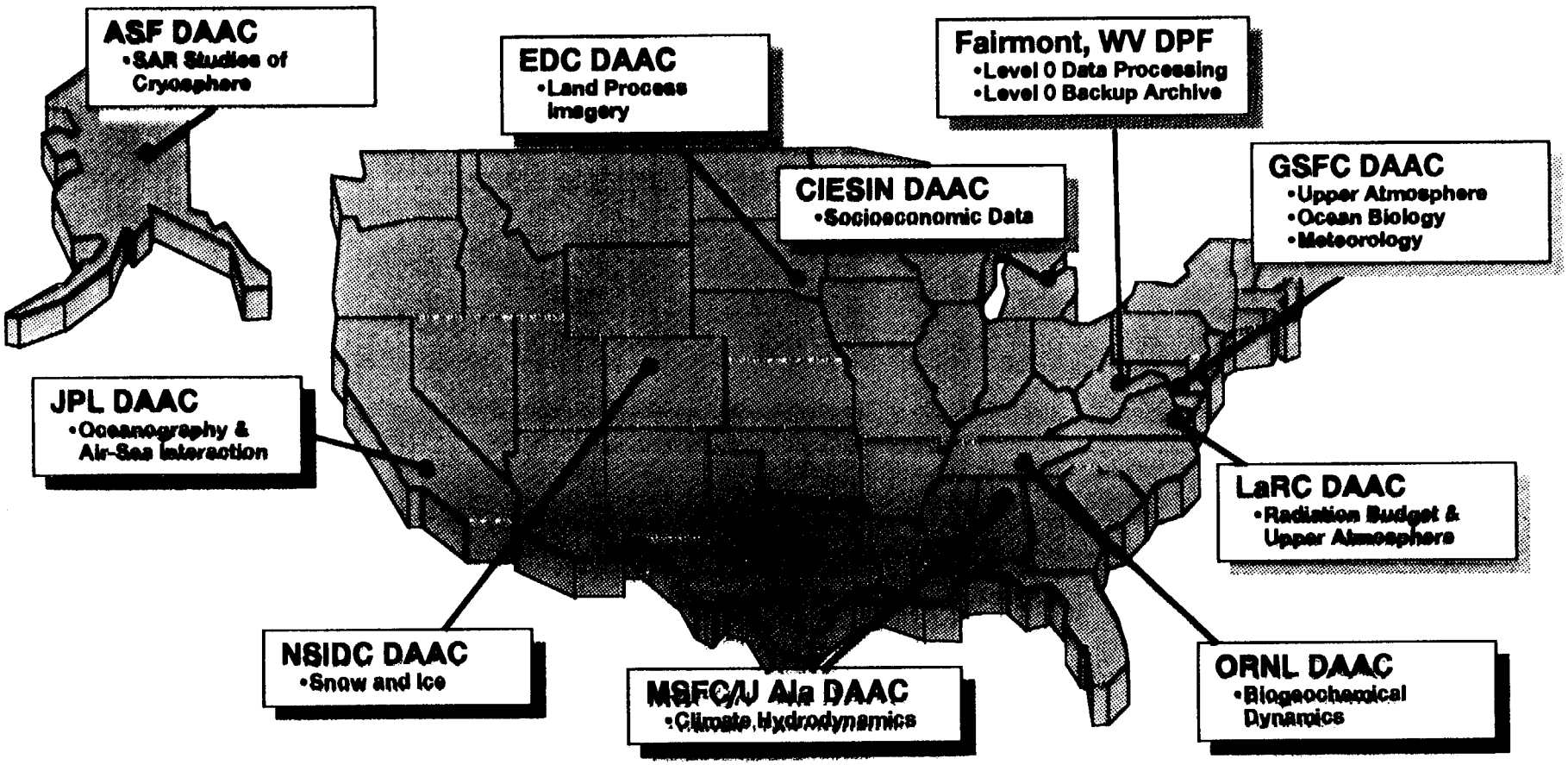

- *Co-locate expertise and data at Distributed Active Archive Centers (DAACs)*
- *Use existing facilities and selected new investments*

European Science Networks

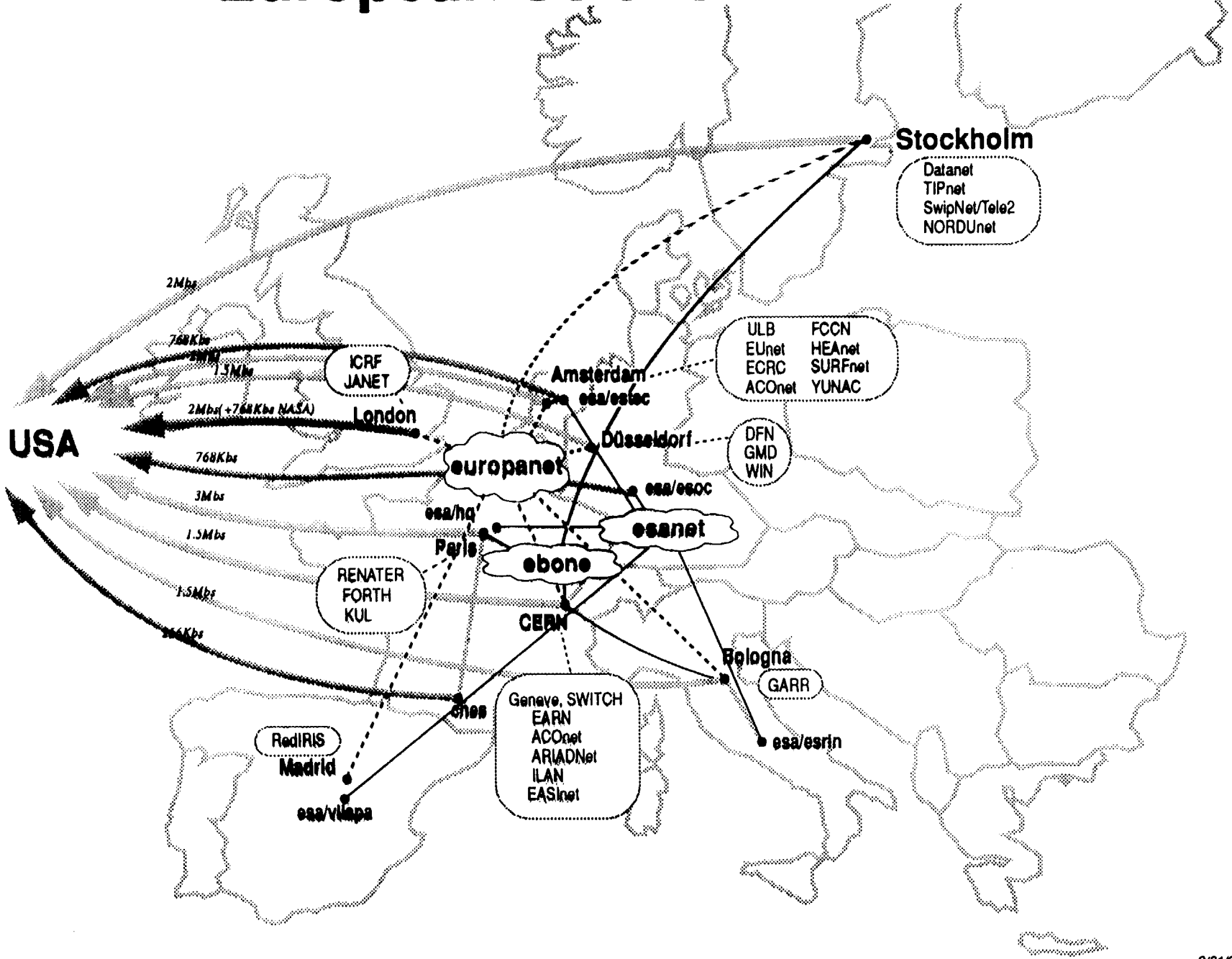

9/21/94 W. Van Camp
Sterling Software, NSI

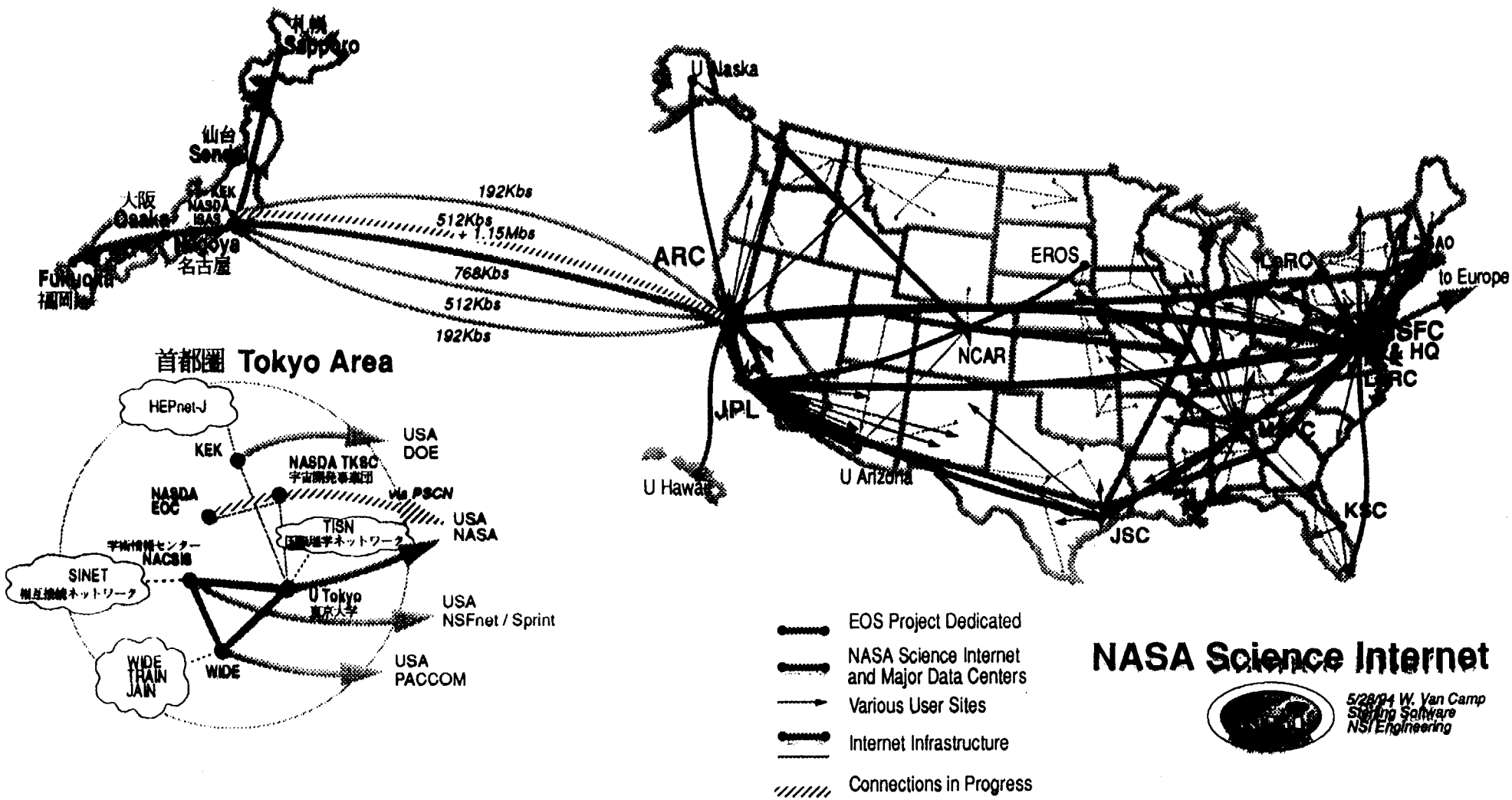
札幌
Sapporo
仙台
Sendai
大阪
Osaka
KEK
NASDA
IBAS
Nagoya
名古屋
Fukuoka
福岡
192Kbs
512Kbs
+ 1.15Mbs
768Kbs
512Kbs
192Kbs
ARC
U Alaska
EROS
GSFC
& HQ
to Europe
NCAR
JPL
U Hawaii
U Arizona
JSC
KSC
首都圏 Tokyo Area
HEPnet-J
KEK
USA
DOE
NASDA TKSC
宇宙開発事業団
NASDA
EOC
via PSCN
TISN
USA
NASA
NACSIS
SINET
相互接続ネットワーク
U Tokyo
東京大学
USA
NSFnet / Sprint
WIDE
TRAIN
JAIN
WIDE
USA
PACCOM
EOS Project Dedicated
NASA Science Internet
and Major Data Centers
Various User Sites
Internet Infrastructure
Connections in Progress
NASA Science Internet
5/28/94 W. Van Camp
Sterling Software
NSI Engineering

CEOS Network Sites
External Network Routing

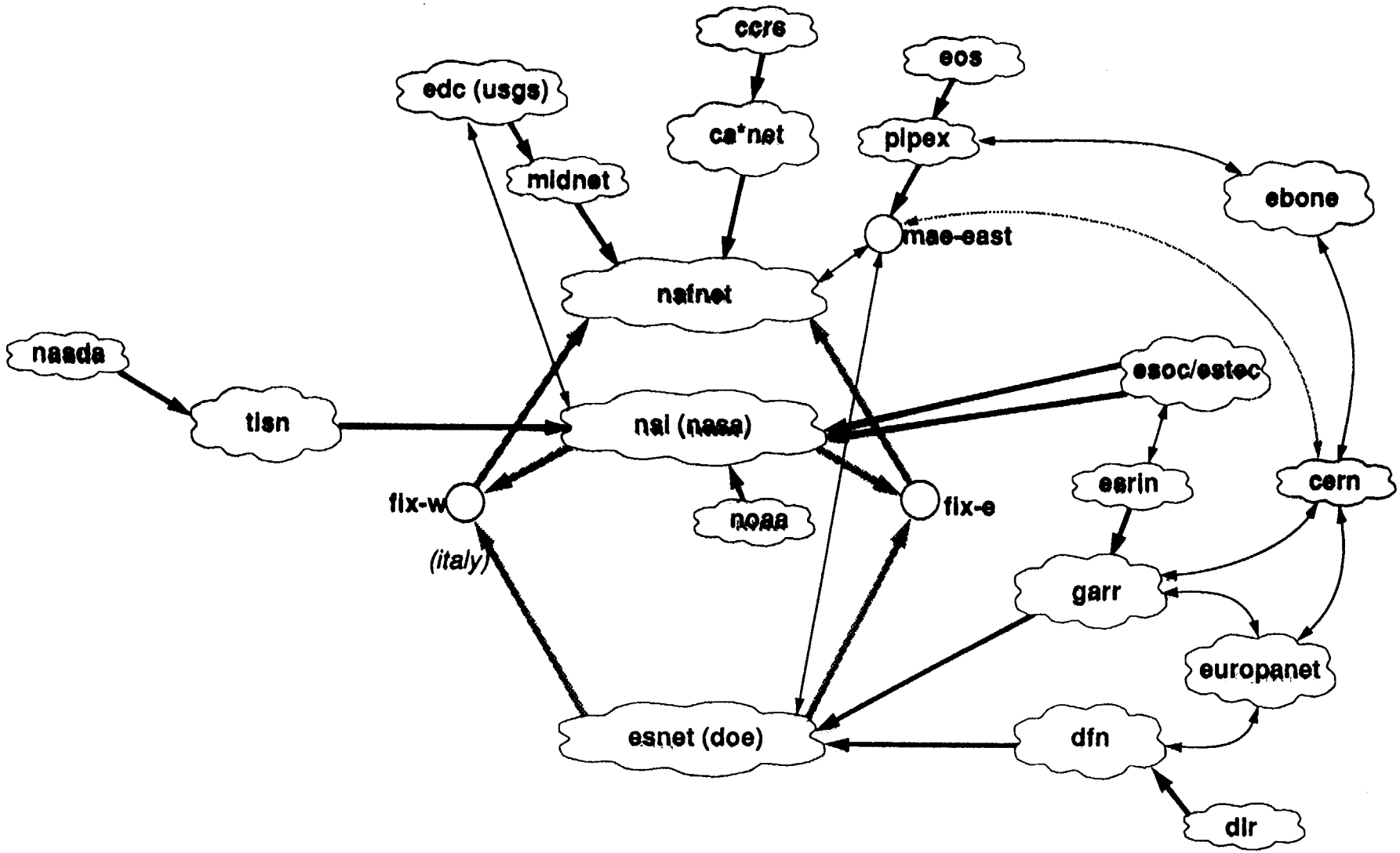

W. Van Camp
NSI Engineering
9/15/94

NASA Science Internet

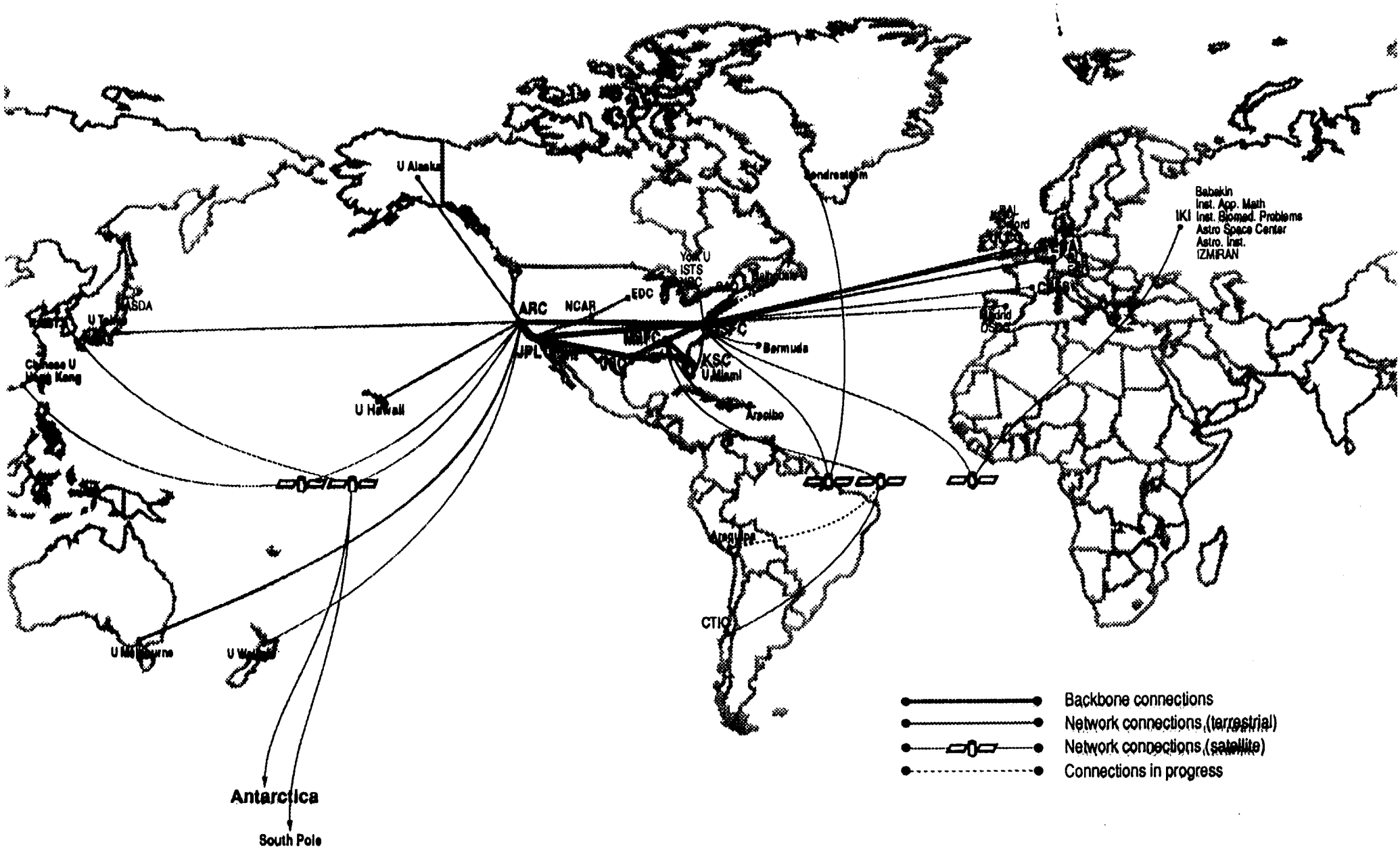

6/17/94 W. Van Camp
Sterling Software, NSIO

C. E. O. S

Committee on Earth Observation Satellites

- 20 Space Agencies
- 9 Affiliates
- 5 Observers

CEOS

Committee on Earth Observations Satellites

Volume I

1992 Yearbook

A Statement of Satellite Missions of CEOS Members

DRAFT

CEOS OBJECTIVES

- To optimize the benefits of spaceborne Earth observations through cooperation.

- To serve the international user community by acting as the focal point for international coordination of space-related Earth observations.

- To develop policies on data and information exchange among spaceborne Earth observations systems and users.

WORK PACKAGES (REVISED)

- Analysis of overall user requirements interpretated in terms of priorities amongst Application and Research Programs
- Analysis of instruments feasibility for required measurements
- Definition of an adequate space observing system responsive to user needs
- Comparison of current and planned space observing systems with the one defined above
- Identification of gaps and duplications in the various space programs
- Assessment of information in CEOS Dossiers and proposals for modification (if any)

REVISED TERMS OF REFERENCE

The charge to the task force is :

- **to analyse the users requirements, initially as reported in the CEOS Affiliates' Dossier (Volume C), interpreted and complemented as necessary**

- **to assess whether current and planned satellite instrumentation, as reported in the Dossier Volume A (complemented as necessary), provide information sufficient to meet the users requirements**

- **to identify possible improvements which CEOS members could achieve through enhanced co-operation and co-planning**

- **to iterate all findings with a User Workshop in the May/June '95 time frame and to report on all results to the 9th CEOS Plenary in October '95**

- **as a by-product of this work, to advise about possible improvements of the next edition of the Dossier to be published during 1996**

Range of Data Exchange Mechanisms (continued)

- Once the data pool is populated, availability of those data at reduced cost is :

  - open to all scientific users
  - restricted by proposal acceptance.

- Data in one part of the world is available at reduced price but over other parts of the world "to be negotiated".

Range of Data Exchange Mechanisms

- All data available at "reduced" price to all non-commercial users.

- Agencies must buy the requested scenes at full commercial prices to populate the pool. This therefore depends on :

  - funds
  - identification of partners to share the cost burden
  - national priorities.

Current or Proposed IGBP-GCTE Transect Studies

IGBP-DIS / CEOS PILOT PROJECT ON DATA EXCHANGE

Objective :

To evaluate the applicability of the newly enunciated CEOS Satellite Data Exchange Principles for High Resolution Data in support of Global Change Research.

Participants :

CNES
NASA
NASDA
(ESA)
(ISRO)

IGBP-DIS
(representing IGBP core projects)

CEOS
Satellite Data Exchange Principles for Global Change Research - 1993 (cont'd)

4. Maximizing use of satellite data being the fundamental objective : exchange / sharing mechanism is the essential first step ...

5. Non-discriminatory access to satellite data by all users for Global Change research is essential and should be achieved by exchange/sharing mechanism set up by CEOS members.

6. No exclusive period of data use. Goal should be to release data within 3 months after the start of routine acquisition.

7. Criteria and priorities for data archiving, purging, etc, to be harmonized.

CEOS
Satellite Data Exchange Principles for Global Change Research - 1993

"Recognizing the common goal of providing data to Global Change researches on a consistent basis reflecting primarily the cost of filling the request ..."

1. Preservation of all data needed for long term Global Change research.

2. Data archiving with meta-data and including quality control.

3. Following international standards for storage, processing, etc.

CEOS RECENT ACTIONS

- New Data Policy Statement
- IGBP-DIS / CEOS Pilot Project for High Resolution Data for Global Change
- A New Task Force for Evaluating CEOS Long-Term Plan (co-chairs : Bizarro Bizarri / Ichtiaque Rasool)

CEOS Working Group Structure

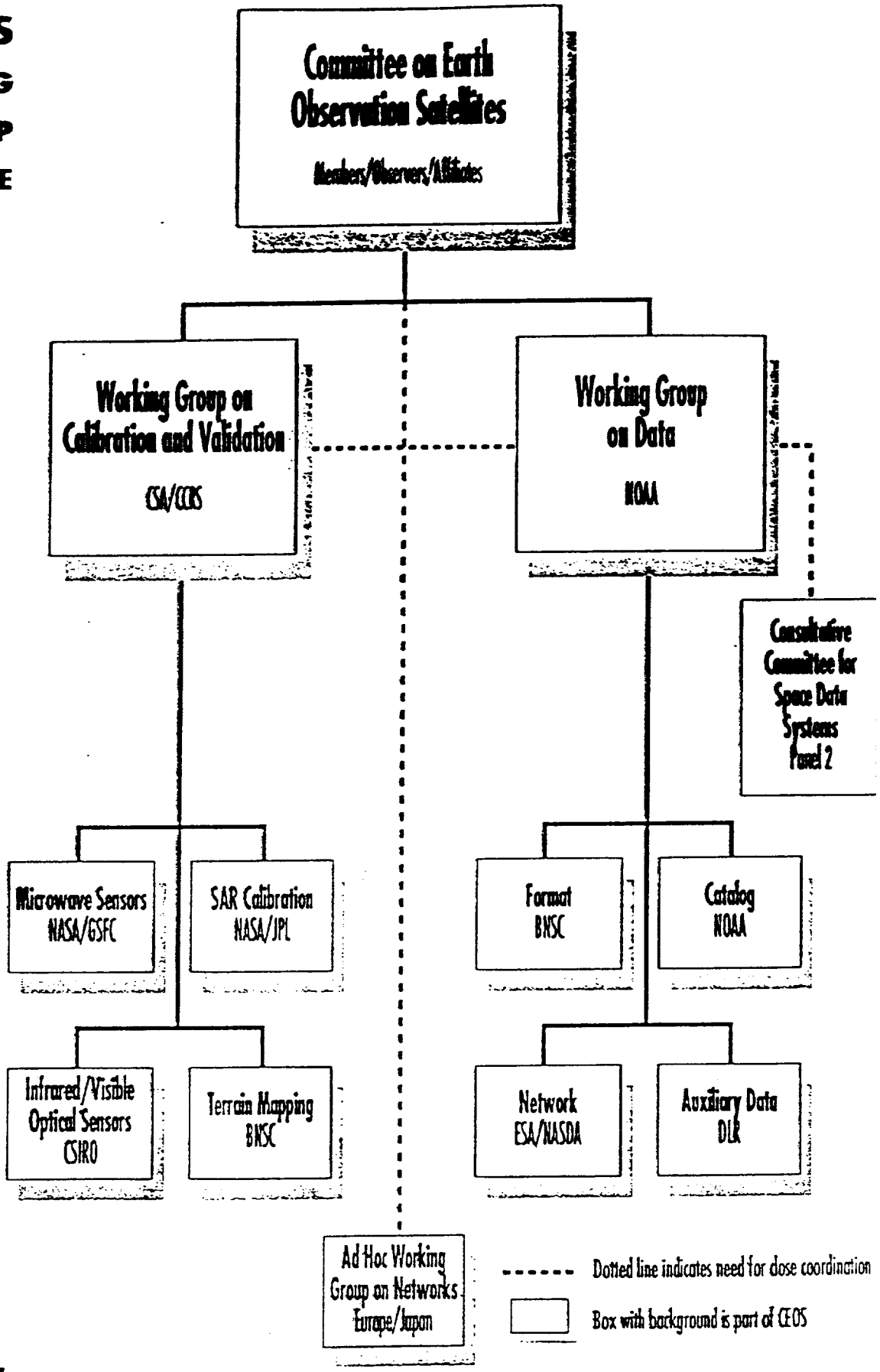

WCRP Satellite Data Requirements [illegible]		
[illegible]	[illegible] type	[illegible] sensor
Solar irradiance at TOA	Solar flux radiometer	ACRIM
Earth radiation fluxes at TOA (SW & LW)	Earth radiation budget radiometer	ScaRaB, CERES
Earth surface/cloud multi-directional reflectance	Multi-directional radiometer (vis, IR)	ATSR, MISR, POLDER
Multispectral albedo	Imaging multi-spectral (vis, IR) radiometer	AVHRR(2), AVNIR, MODIS, MERIS, MISR, OCTS, GLI
Ocean colour	Ocean colour radiometer	SeaWiFS, OCTS, MODIS, MERIS, EOS-COLOR, GLI
Sea surface temperature (SST)	Imaging multi-spectral (IR) radiometer Atmospheric sounder (IR) Multi-directional radiometer (IR)	AVHRR(2), OCTS, MODIS, MERIS, VTIR, GLI AIRS, IASI ATSR
Land temperature	Imaging multi-spectral (IR) radiometer Atmospheric sounder (IR) Multi-directional radiometer (IR)	AVHRR(2), OCTS, MODIS, MERIS, VTIR, GLI AIRS, IASI ATSR
Ocean surface wind vector	Wind (microwave) scatterometer	AMI, NSCATT
Ocean wave height	Radar altimeter	RA, ALT, SSALT
Ocean surface topography	Precision radar altimetry package	Single or 2-frequency altimeter; GPS + water vapour radiometer or DORIS
Sea ice cover	Imaging multi-spectral (microwave) radiometer	SSM/I, MIMR, MSR, AMSR
Sea ice edge	Mapping radar (SAR)	AMI, SAR, RADARSAT
Sea ice motion	Mapping radar (SAR)	AMI, SAR, RADARSAT
Snow cover	Imaging multi-spectral (vis, microwave) radiometer	AVHRR, MODIS, SSM/I, MIMR, MERIS, OCTS, GLI, AMSR

CEOS

Committee on Earth Observation Satellites

1993 CEOS DOSSIER

VOLUME C

The Relevance of Satellite Missions to Global Environmental Programmes

Agency	ESA
Missions - instruments	**ERS-1** AMI, RA, ATSR **ERS-2** As ERS-1 plus enhanced version of ATSR, GOME, PRARE **ARISTOTELES** Gravity gradiometer, GPS receiver, Vector and scalar magnetometer **POEM-1** AMI (ASAR (?)), MERIS, MIMR (?), MIPAS, RA-2, AATSR, GOMOS, PRAREE, SCIAMACHY, ScaRaB/CERES VIRSR, IRTS, MTS, MHS, IASI (?), SEM, S&R, MCP - see EUMETSAT Polar System Mission **ESA Future Missions** All POEM-1 instruments, ALADIN, AMAS, ASCATT, ATLID, Rain/Cloud radar

Mission (Agency)	Status	Launch date/ Duration	Orbit details	Instruments	Primary application areas
LAGEOS I (NASA)	in service	1976 10000 year design life	110 degree inclination, 5900km	Laser retroreflectors	Crustal motion, Gravity field
LANDSAT 4 (NOAA)	in service	July 1982 3 years	Near polar sun synchronous, 705km	MSS, TM	Land
LANDSAT 5 (NOAA)	in service	Mar 1984 3 years	Near polar sun synchronous, 705km	MSS, TM	Land
SPOT 1 (CNES)	in service	Feb 1986 3 years	Sun synchronous	HRV	Land
GOES 7 Geostationary Operational Environmental Satellite (NOAA)	in service	Feb 1987 5 years	Geostationary	VAS, SEM, WEFAX, DCS	Atmospheric dynamics/water and energy cycles
IRS-1a Indian Remote Sensing Satellite (ISRO)	in service	Mar 1988 3 years	Polar, sun-synchronous	LISS I&II	Land
METEOSAT 3 (EUMETSAT)	in service	June 1988 3 years	Geostationary	MVIRI	Atmospheric dynamics/water and energy cycles
NOAA 11 (NOAA)	in service	Sept 1988 31 months	Polar, sun synchronous, 850km, pm crossing	AVHRR/2, HIRS/2, SSU, MSU, SBUV/2, S&R, ARGOS	Oceans, Land, Ice and Snow, Atmospheric dynamics/water and energy cycles, Atmospheric chemistry
METEOSAT 4 (EUMETSAT)	in service	Mar 1989 5 years	Geostationary	MVIRI	Atmospheric dynamics/water and energy cycles
GMS-4 Geostationary Meteorological Satellite 4 (JMA/NASDA)	in service	Sept 1989 5 years	Geostationary	VISSR	Atmospheric dynamics/water and energy cycles
SPOT 2 (CNES)	in service	Jan 1990 3 years	Sun synchronous	HRV	Land
MOS 1b Marine Observation Satellite (NASDA)	in service	Feb 1990 2 years	Sun synchronous	MSR, VTIR, MESSR	Ice and snow, Atmospheric dynamics/water and energy cycles, Ocean dynamics, Land
METEOSAT 5 (EUMETSAT)	in service	Mar 1991 5 years	Geostationary	MVIRI	Atmospheric dynamics/water and energy cycles

INTERNATIONAL PROGRAMS

Otis B. Brown
University of Miami

Overview

- Timeline
- Components
- Rationale
- Background

Timeline

- World Climate Research Programme [WCRP] [Physical Climate]
  - GEWEX, TOGA, WOCE
- International Geosphere Biosphere Programme [IGBP] [Climate System]
  - Pages, JGOFS, BAHC

Timeline (continued)

- Present - Future (late 90's next millenium)

WCRP

CLIVAR, SPARC, GEWEX

IGBP

LOICZ, GOESS, GAIM, GCTE, IGAC

PAGES, START, DIS, BAHC, JGOFS

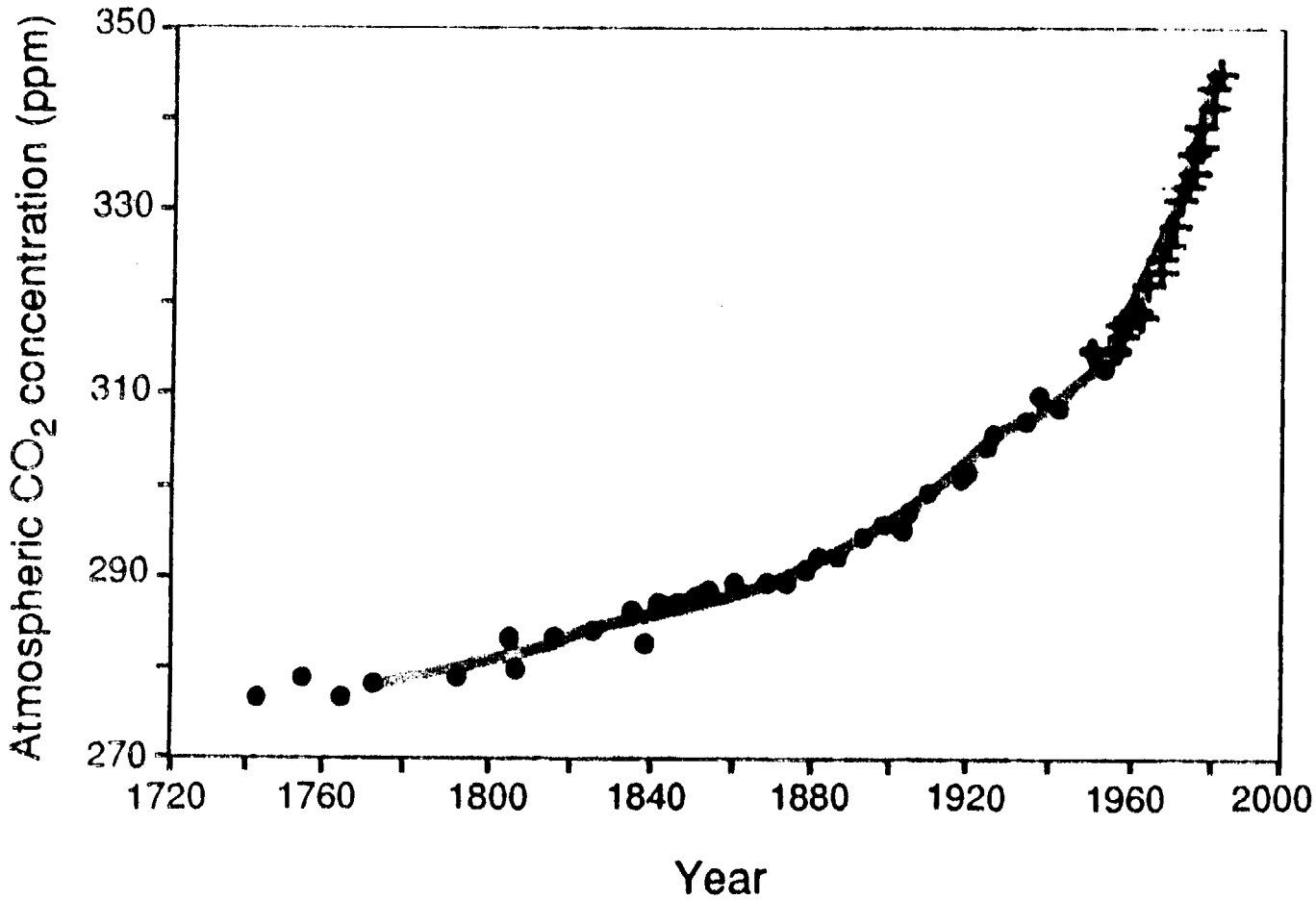

Figure 3. Record of the atmospheric concentration of carbon dioxide (adapted from Siegenthaler and Oeschger, 1987). Circles refer to the composition of air bubbles trapped in Antarctic ice. Crosses are annual values measured at the Mauna Loa Observatory.

Rationale

- Observed steady increase in atmospheric CO_2
- Trends in global temperature records
- Increased impact of severe weather events

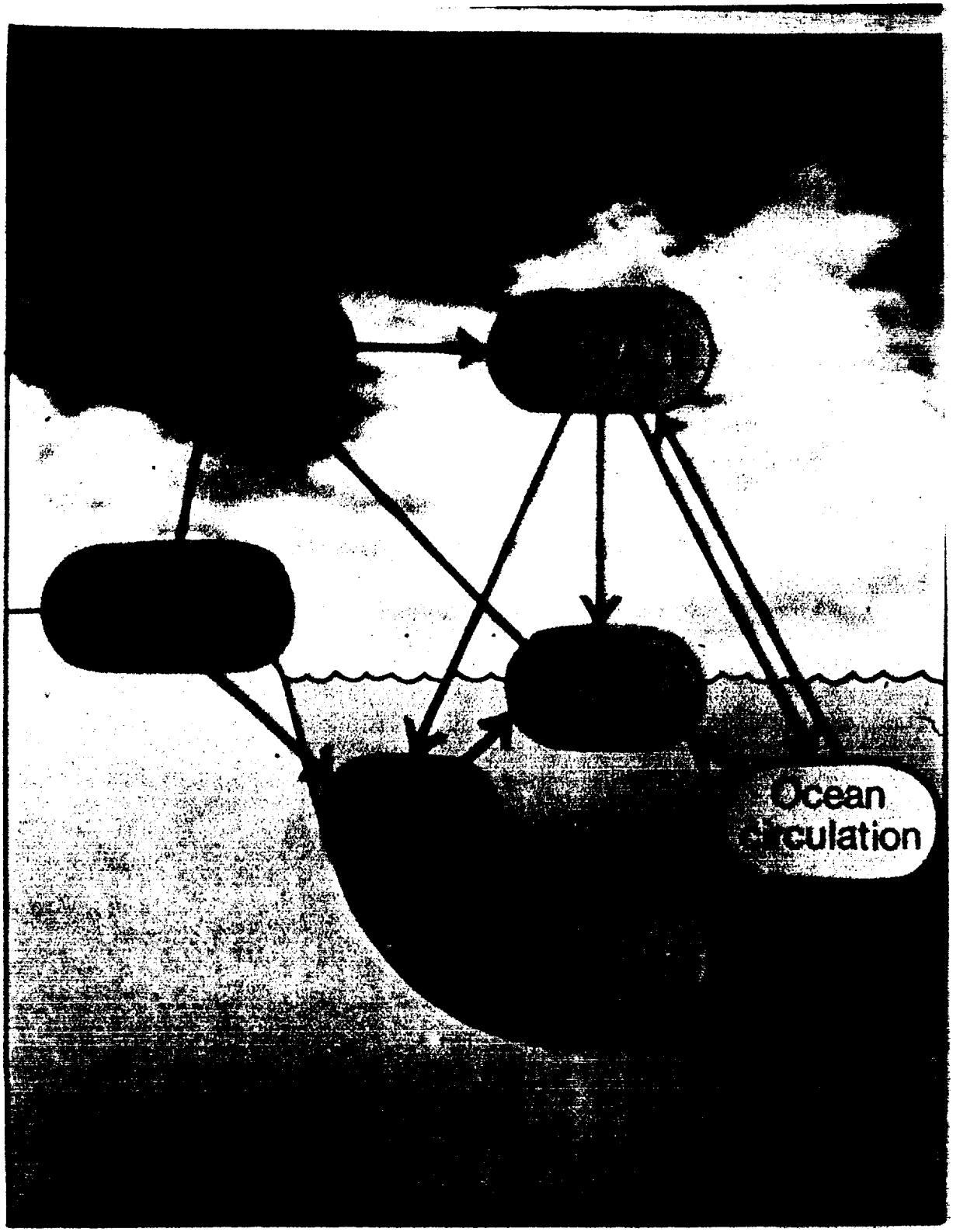
Ocean
rculation

CO_2 Cycle

- Relative roles of air/land/ocean are not well quantified
- A major unknown is the flux in/out of the ocean

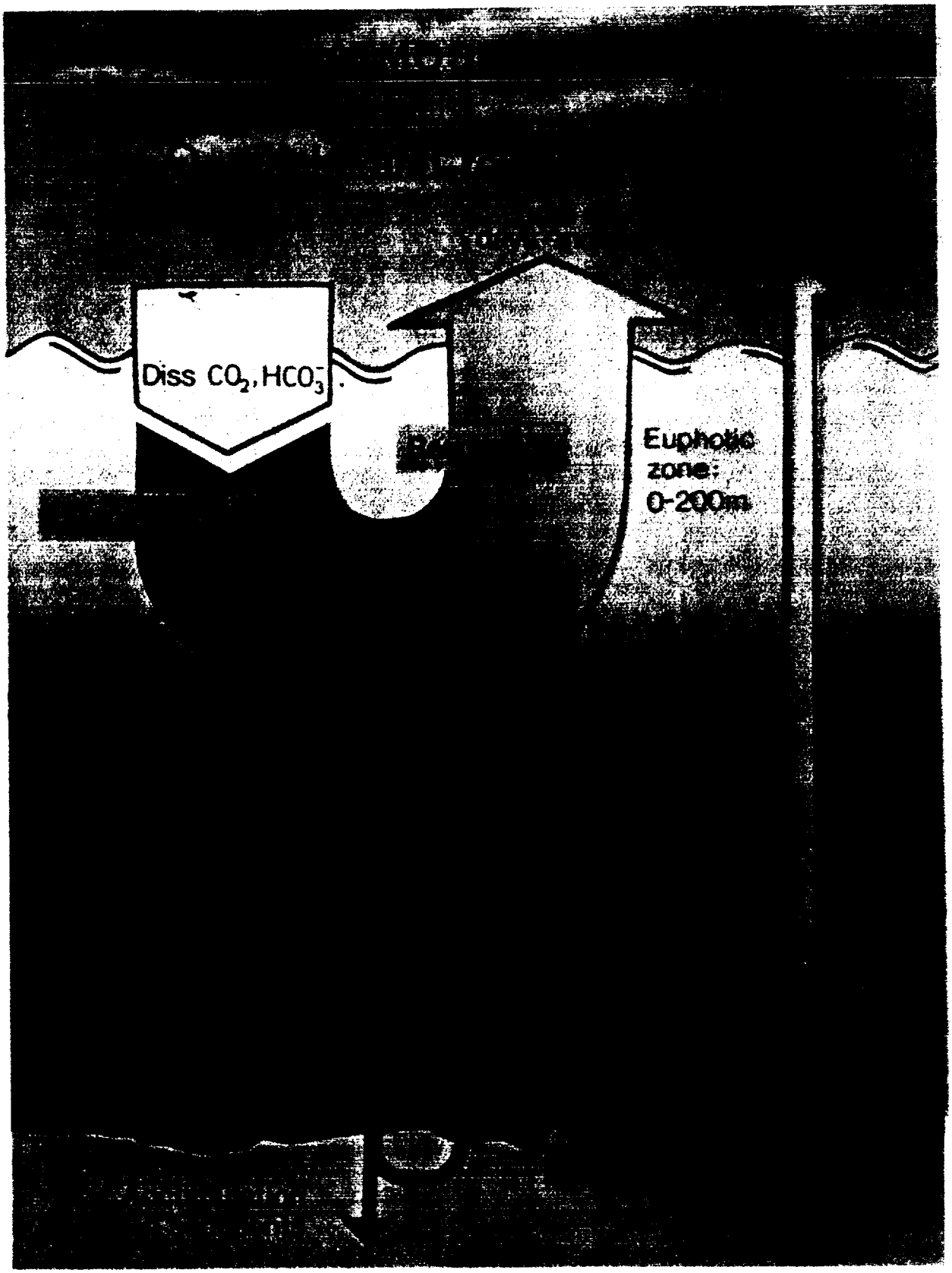
Diss CO_2, HCO_3^-
Euphotic zone: 0-200m

JGOFS Purpose

To assess more accurately, and understand better, the processes controlling regional to global and seasonal to interannual fluxes of carbon between the atmosphere and ocean interior, and their sensitivity to climate changes.

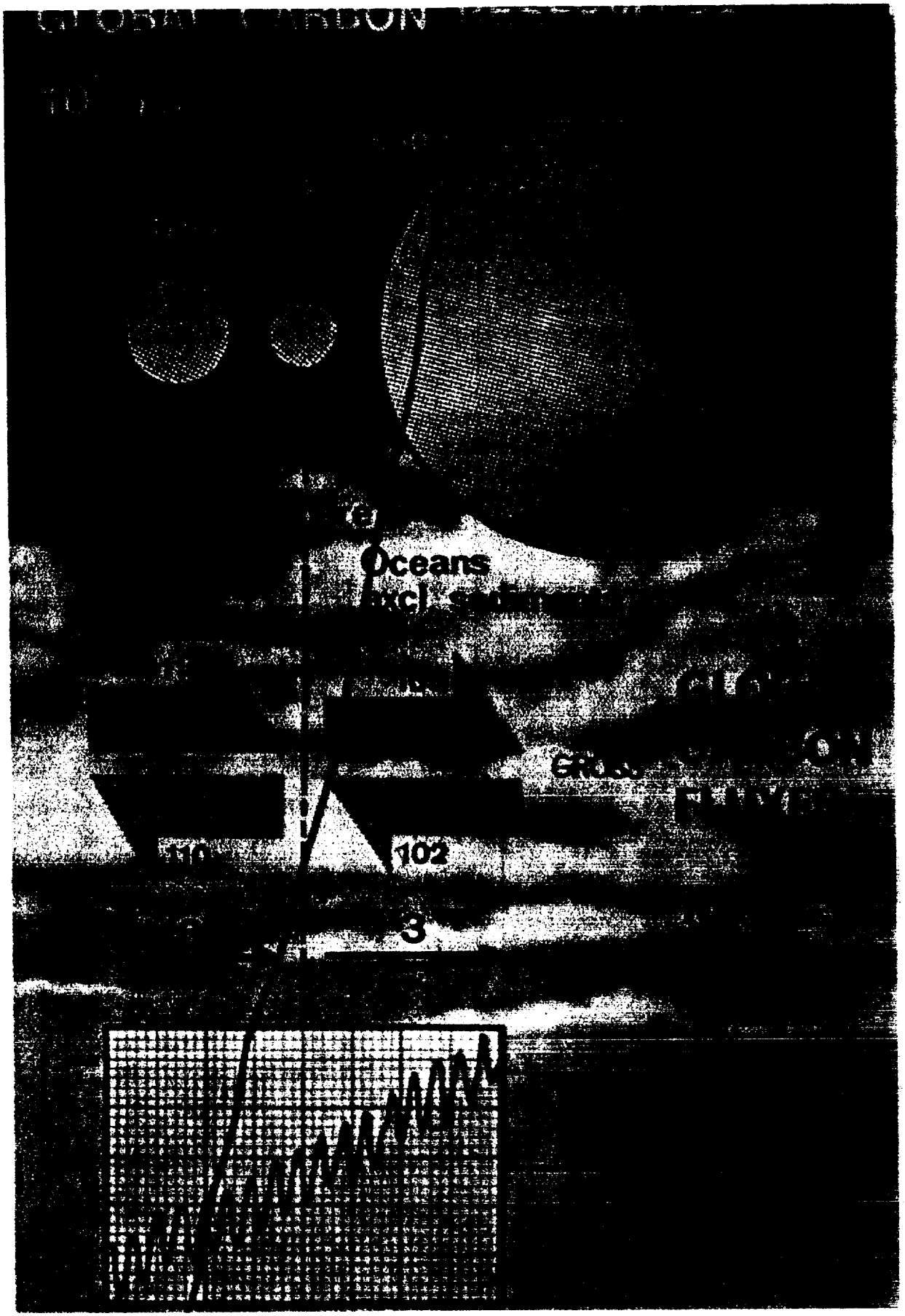
Oceans
102
3

- [illegible]

- [illegible] LAST ONE [illegible] 10^{15} TONS OF C) EXPORTED FROM SURFACE LAYER BY SINKING

- [illegible] THE BIOS[illegible]

- SCALE OF COMPARISON:
  FOSSIL FUEL EMISSIONS ARE [illegible] 5×10^{9} TONS PER ANNUM

JGOFS Objectives

- To characterize the present geographical distribution of key biogeochemical properties and rate processes pertinent to the oceanic carbon system, as a necessary prerequisite to predicting change in the system.

JGOFS Objectives (continued)

- To identify and quantify the biogeo -chemical mechanisms, including trophodynamic and physio-chemical processes, that control the forms in which carbon moves with and through the water via ocean currents, mixing, diffusion, and particle sinking, and the rates of processes transforming carbon among dissolved and particulate, living and nonliving, organic and inorganic forms.

JGOFS Objectives (continued)

- To develop coupled physical and biogeochemical models of the ocean for the purposes of testing our understanding and improving our ability to predict future climate-related change.

JGOFS Objectives (continued)

- To improve observational constraints on the passive uptake of anthropogenic CO_2 by the oceans, and to improve our understanding of the potential for changes in ocean circulation and biology to modify the oceanic uptake.

IMPROVED INTERPRETATION
ALGORITHM DEVELOPMENT
SITE SELECTION
VALIDATION
MODEL DEVELOPMENT
PREDICTION
CRUISE DESIGN

JGOFS - Current Status

- EqPac Process Study complete, data analysis and synthesis started.
- Arabian Sea Process Study underway.
- Southern Ocean Process Study approved for CY1996/1997.
- Data Management efforts progressing.

JGOFS - Current Status (Con't)

- Cooperative WOCE/JGOFS/DOE CO_2 Survey on schedule.
- Coupled modeling going forward with the initiation of the NOAA supported Carbon Modeling Center.
- Program-wide synthesis activities starting with EqPac, NABE, Survey, Time-series and modeling results.

Ocean Color Context

Primary uses are:

- Testing of coupled models
- Synthesis
- Regional - Basin - Global Estimates

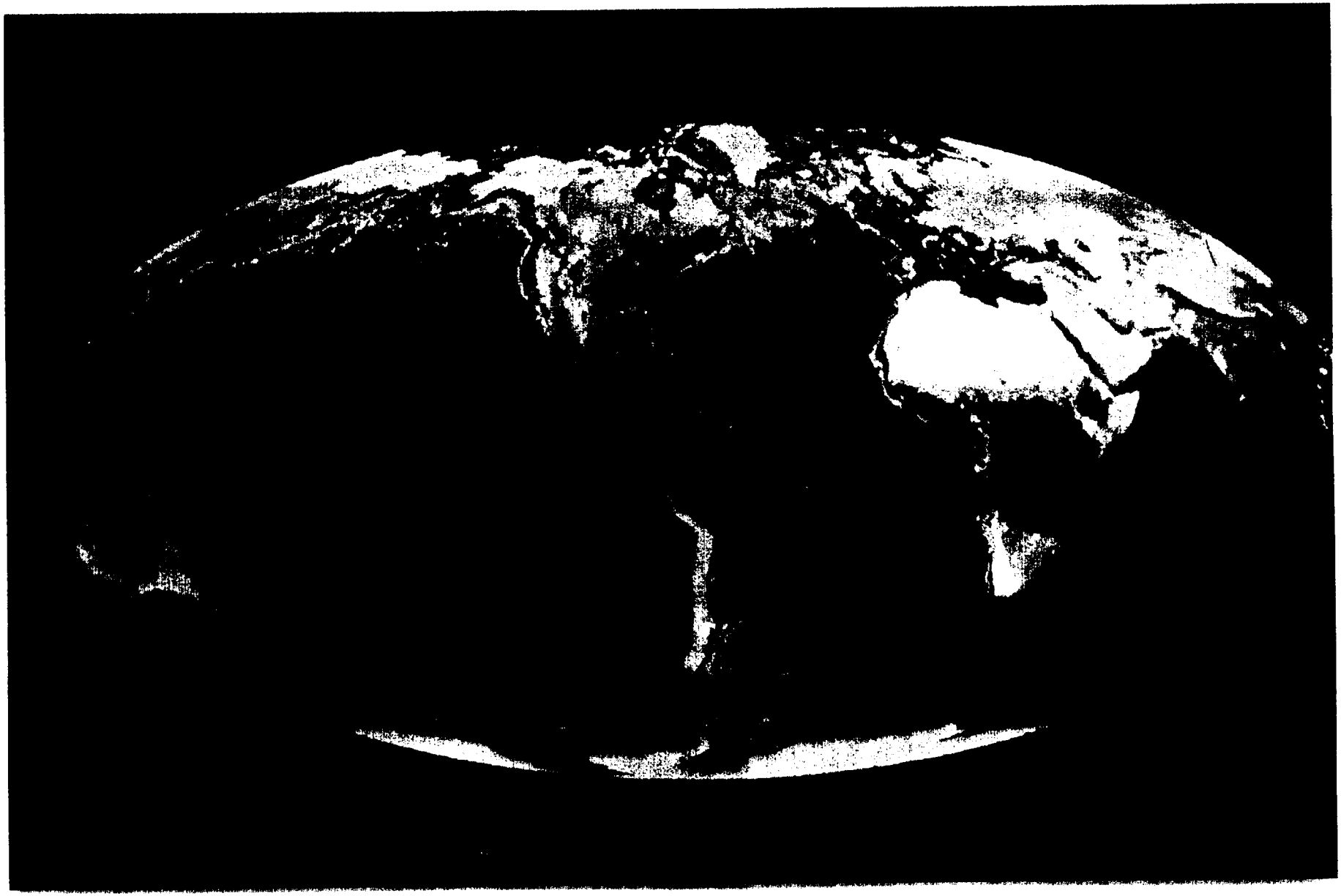

Summary...

Satellite observations

put the

"G"

in JGOFS!

EOS Mission Objectives

- Create an integrated scientific observing system that will enable multidisciplinary study of earth system science
- Develop a comprehensive data and information system, including a data retrieval and processing system
- Acquire and assemble a global database emphasizing remote sensing measurements from space over a decade or more
- Improve predictive models of the Earth system

REBASELINED EOS MISSION PROFILE

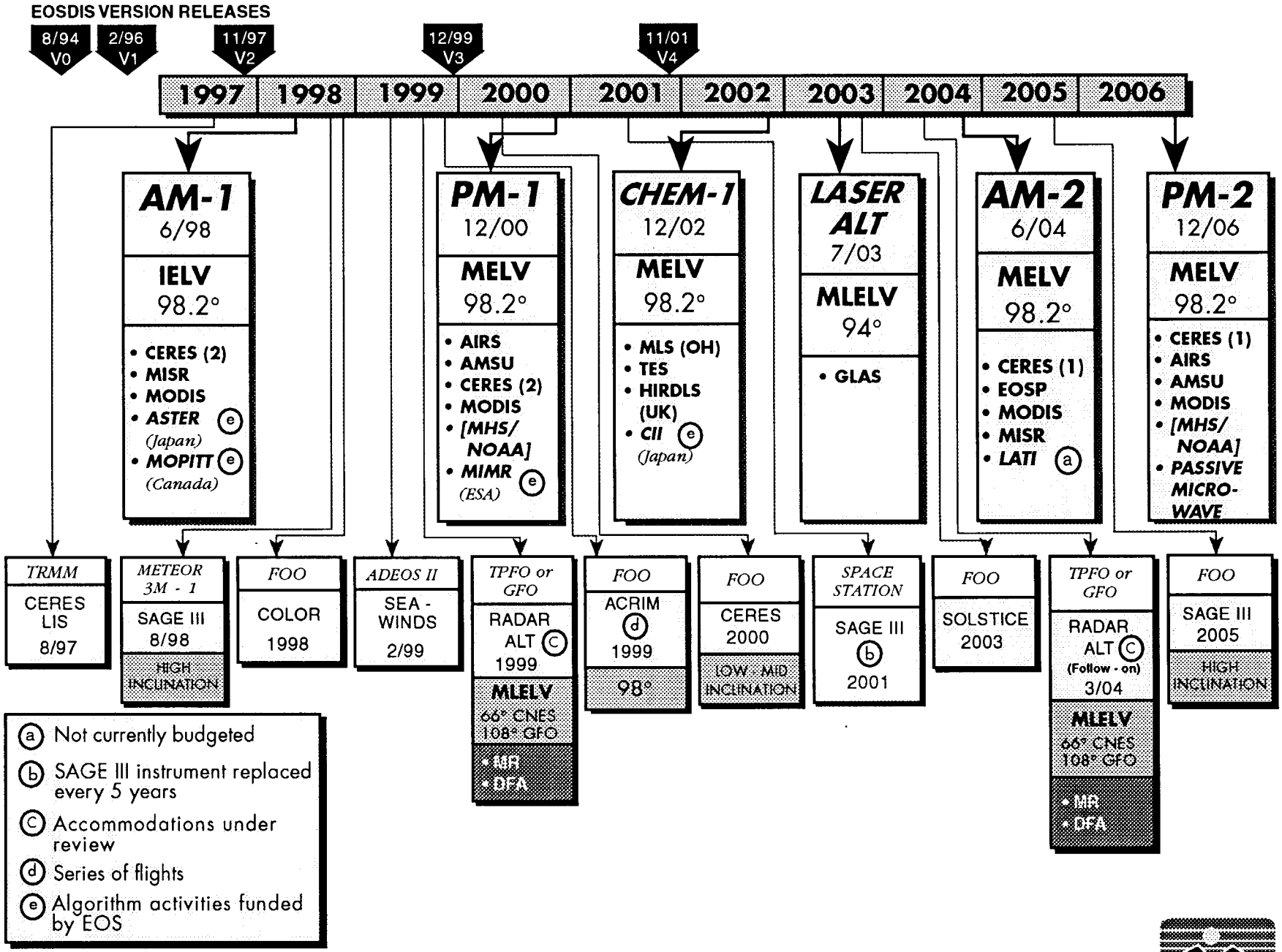

- Spacecraft reflights continue beyond 2006 to support generation of the 15-year science data set
- *Italics denote elements not funded by the EOS program*
- Second MOPITT flight opportunity - TBD

INITIAL FLIGHTS OF EOS PLATFORMS / INSTRUMENTS

ACRIM (1999)
- Solar irradiance

SOLSTICE (2003)
- Solar ultraviolet spectral irradiance

AM-1 (6/98)
- Clouds, aerosols, and radiative balance
- Characterization of terrestrial surface
- Carbon cycle

CERES (2) MODIS ASTER MISR MOPITT

ADEOS II (2/99)
Japan
- Surface wind speed and direction over the global oceans

SEAWINDS

PM-1 (12/00)
- Clouds, precipitation, and radiative balance
- Atmospheric temperature / moisture profile
- Terrestrial snow and sea ice
- Sea-surface temperature and ocean productivity

CERES (2) MODIS AIRS / AMSU / MHS MIMR

CHEM-1 (12/02)
- Atmospheric chemical species and their transformation

HIRDLS MLS TES ODUS

STRATOSPHERE

METEOR 3M-1 (8/98)
- Atmospheric aerosols
- Atmospheric chemical species

SAGE III

RADAR ALT (1999)
- Ocean circulation
- Sea level

MR DFA

SPACE STATION (2001)
- Atmospheric aerosols
- Atmospheric chemical species

SAGE III

LASER ALT (7/03)
- Ice sheet mass balance
- Cloud heights

GLAS

LANDSAT-7 (12/98)
- Terrestrial surface

TM

TROPOSPHERE

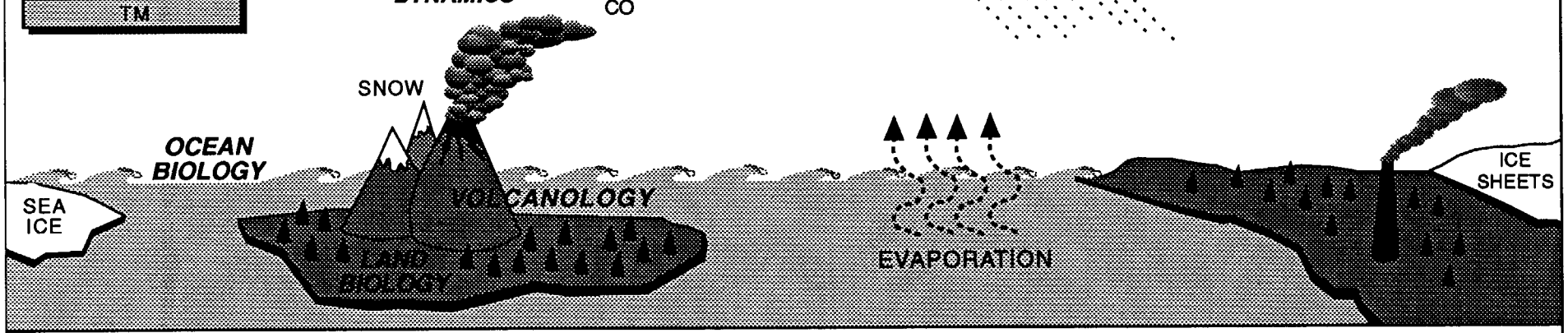

- A BLACK BOX WITH WHITE TEXT (A) INDICATES AN INSTRUMENT PROVIDED BY AN INTERNATIONAL PARTNER
- A WHITE BOX WITH BLACK TEXT (A) INDICATES A JOINT US / INTERNATIONAL PARTNERSHIP

1 / 95

EOS Science Program

- Algorithm development by science teams
- Interdisciplinary science investigations
  - Earth system model development
  - Atmospheric 4-D data assimilation
- Calibration
  - Support of EOS sensor development (transfer radiometers, round-robin calibrations, lunar characterization, etc.)
- Validation
  - Pre- and post-launch activities (airborne simulators, HITRAN database, field experiments, correlative measurement program)

Status of EOS Validation Program

Data Quality Panel

- Chair - Michael Freilich
- Provide guidance and advice relative to validation
- Create a strawman (or template) Validation Plan
- Propose policies about validation and release of data
- Oversee the implementation of approaches for joint collection of validation data

EOS Validation Plan

Goals

- The EOS Validation Plan is a *coordination* plan to assure that the EOS-derived geophysical data products meet the accuracies needed to achieve the science objectives specified in the Project Plan
- Oversee the implementation of approaches for joint collection of validation data
  - Field campaigns (e.g., BOREAS, SCAR, FIRE, JGOFS)
  - Coordinated baseline test sites (e.g., ARM, LTER)
  - Comparison and consistency checks (e.g., CERES)

EOS Requirements Summary

- Develop a long-term calibrated set of measurements
- Measurement requirements and payload complements established
  - EOS investigators provide input and priority
  - Overall priority and focus documented by the IPCC
- EOS is composed of three main elements
  - Spacecraft and instruments
  - Ground data system to process, store, distribute, and archive data
  - Science analysis and ground truth to interpret data

OCEAN BIOLOGY PROGRAM

—

OFFICE OF MISSION
TO PLANET EARTH

↓

SCIENCE DIVISION

↓

OCEANS, SOLID EARTH,
NATURAL HAZARDS BRANCH

↓

OCEAN BIOLOGY PROGRAM

—

- FUNDING LEVEL: ~ 7M IN FY 1995 ↘

—

- OVERALL GOAL
  - IMPROVE OUR UNDERSTANDING OF OCEAN BIOGEOCHEMICAL CYCLES
- FOCUS
  - EXCHANGE OF CARBON WITH THE ATMOSPHERE, SEA FLOOR, AND CONTINENTAL BOUNDARIES
  - RESPONSE OF MARINE BIOTA TO ANTHROPOGENIC PERTURBATIONS AND CLIMATE CHANGE
- ISSUES
  - PROCESSES CONTROLLING OCEAN BIOGEOCHEMICAL CYCLES
  - MAGNITUDE AND VARIABILITY OF PRIMARY PRODUCTION
  - ULTRAVIOLET LIGHT AND MARINE LIFE
  - MARINE BIOTA AND AIR-SEA EXCHANGE OF CO_2 AND DMS
  - BIOLOGICAL - PHYSICAL COUPLING

—

- APPROACH / STRATEGY
  - OBSERVATIONS
    - SATELLITE (CZCS, SEAWIFS, ETC.)
    - AIRCRAFT (AOL, AVIRIS, ETC.)
    - LABORATORY, IN-SITU
  - BIOGEOCHEMICAL / PHYSICAL MODELING
- MAJOR ELEMENTS
  - OCEAN PRODUCTIVITY (VARIABILITY, FORCING BY PHYSICAL PROCESSES)
  - ALGORITHM DEVELOPMENT (ATMOSPHERIC CORRECTION SCHEMES, BIO-OPTICAL ALGORITHMS, PRIMARY PRODUCTION MODELS)
  - AIR-SEA FLUXES (P_{CO_2} VARIABILITY, DMS PRODUCTION)
- INTERFACES
  - CENR SUBCOMMITTEE ON GLOBAL CHANGE
  - US GLOBAL CHANGE RESEARCH PROGRAM
  - INTERNATIONAL GEOSPHERE-BIOSPHERE PROGRAM
  - GLOBAL OCEAN OBSERVING SYSTEM
  - EARTH OBSERVING SYSTEM

- LINK WITH EOS

  - EOS WILL PROVIDE LONG-TERM SATELLITE OBSERVATIONS OF OCEAN COLOR, SST, WINDS, AEROSOLS, OZONE, ETC. TO ADDRESS RANDA PROGRAM'S OBJECTIVES

  - ALGORITHMS, PREDICTIVE EQUATIONS, MODELS DEVELOPED IN RANDA PROGRAM WILL BE USED IN EOS INTERDISCIPLINARY INVESTIGATIONS - SEAWIFS → PATHFINDER

  - COMPLEMENTARY CALIBRATION/VALIDATION ACTIVITIES

- CHALLENGES

  - INTEROPERABILITY OF SATELLITE SENSORS

  - OBSERVING SYSTEM (BUOYS, PLATFORMS) TO EVALUATE/COMPLEMENT OBSERVATIONS FROM SPACE

  - LAND/OCEAN INTERACTIONS.

—

DOE PROGRAMS RELEVANT TO OCEAN STUDIES (COLOR)

D OMP - Ocean Margins Program -

1996-7 field year - Cape Hatteras

27 moorings with optical sensors

"OPERATIONAL" CASE II ALGORITHMS

To assess role of anthropogenic forcing at ocean margins on global carbon cycle.

2) WOCE / CO_2 survey - through 1998

- high precision / intercalibrated TCO_2 measurements in global ocean -

No biology at present

3) ARM - Atmospheric RADIATION Measurements

$40 million / year -

TWP ARCS station around 5°S

- will need SST, cloud and aerosol measurements.

- opacity / albedo of ocean (latent heat)

- SeaWIFS aerosols - in global albedo studies - Atmospheric Science (DOE)

- OCEAN COLOR / NSTAT Budgets / gas budgets (FEEDBACKS)

NOAA Ocean Color Project
Fiscal Year 1995 Implementation Plan

Table of Contents

I. Program Introduction . . . 1
- A. Background . . . 1
- B. Goals . . . 1
- C. Objectives . . . 2
- D. Approach . . . 2
- E. Management Structure . . . 4

II Fiscal Year 1994 Report . . . 4
- A. Progress . . . 4
  - Hawaii Strategic Site . . . 4
  - West Coast Strategic Site . . . 6
  - Gulf of Mexico Strategic Site . . . 6
  - Algorithm Development . . . 7
    - University of Hawaii . . . 7
    - Scripps Institution of Oceanography . . . 8
    - Stennis Space Center . . . 9
  - NOAA/NASA SeaWiFS Level 1A Data Archive . . . 10
- B. Accomplishments . . . 11
- C. Applications . . . 11
- D. Critical Evaluation of Project Performance . . . 12
- E. Response to Reviews . . . 13
- F. FY 1994 Spending Reports . . . 14

III. FY 1995 Implementation . . . 17
- A. Objectives . . . 17
- B. Strategic Sites . . . 17
  - Hawaii Strategic Site . . . 17
  - West Coast Strategic Site . . . 18
  - Gulf of Mexico Strategic Site . . . 18
  - Alaska Strategic Site . . . 18
  - NOAA/NASA SeaWiFS Archive . . . 19
- C. Budget . . . 21

IV. Project Outlook . . . 24
- A. Timeline . . . 24
- B. Future Requirements . . . 24
- C. COP's Ocean Color Program Funding History . . . 25

Appendix 1 - Review Panel Membership I

Appendix 2 - Hawaii Strategic Site Proposal II

Appendix 3 - West Coast Strategic Site Proposal III

Appendix 4 - Gulf of Mexico Strategic Site Proposal IV

Appendix 5 - SeaWiFS Archive Report V

Appendix 6 - Alaska Strategic Site Proposal VI

NOAA Ocean Color Project
Fiscal Year 1995 Implementation Plan

I. Program Introduction

A. Background

The importance of remotely sensed ocean color data to understanding the ocean's role in coastal and global biogeochemistry, climate, and change became apparent to the oceanographic community through retrospective analyses of Coastal Zone Color Scanner (CZCS) data. The projected 1995 launch of NASA's Sea-viewing Wide Field-of-view Sensor (SeaWiFS) will restore and improve the ocean color remote sensing capability lost in 1986 with the cessation of the CZCS.

In cooperation with the NASA SeaWiFS Project, the Coastal Ocean Program Office (COP) initiated the NOAA Ocean Color Project in FY 1993 to realize the applications of SeaWiFS high resolution (1-km) ocean color data to coastal research and resource management. NASA is concentrating its efforts on the acquisition, archiving, and research applications of open ocean data; COP's investment is in the collection, algorithm development, and applications of high resolution, local area data in the coastal ocean, estuaries, and Great Lakes. The collaborative efforts of both agencies will ensure comprehensive acquisition and availability of both global and local area coverage data (GAC and LAC, respectively) for the entire U. S. coastal regime. Access to a complete coastal SeaWiFS HRPT data archive, in conjunction with regional algorithm research, will support a stream of ocean color data and high quality data products.

Ocean color data will have applications in the research and management efforts of the NOAA strategic elements Coastal Ecosystem Health, Building Sustainable Fisheries, and Advance Short-term Forecast and Warning Services. The Interagency Coastal Water Color Workshop (January, 1994) demonstrated the interest in coastal ocean color data expressed by participants from NASA, the Department of the Navy, EPA, USGS, state agencies and academic researchers. Anticipated applications include: monitoring eutrophication and potentially harmful algal blooms; analysis of physical processes and feature tracking; biogeochemical process analysis; sediment transport; pollutant transport; and atmospheric chemistry.

B. Goals

To make high resolution, coastal ocean color data and data products available to users in the research and coastal resource management communities

To demonstrate and improve applications of satellite ocean color data to coastal resource management and research.

C. Objectives

To ensure comprehensive acquisition of the high resolution, 1-kilometer SeaWiFS ocean color data for U.S. coastal waters.

To establish a central archive and distribution center of Level 1A[1] full resolution (1-km) SeaWiFS data for U.S. coastal waters.

To develop and validate region specific algorithms to translate observations of coastal ocean color to local and regional estimates of phytoplankton pigment concentration, and phytoplankton biomass and productivity.

To develop methods for using ocean color data to improve our understanding of the physical and biogeochemical processes of the coastal ocean.

To promote science application demonstrations which utilize ocean color data products (and derived products) to facilitate coastal resource and environmental management.

D. Approach

Fiscal Year 1993

The Coastal Ocean Program's Ocean Color Project was initiated in FY 1993. Initial investments were made in acquisition and science efforts at strategic sites selected to provide comprehensive, high resolution data coverage of the coastal U.S. It was determined that four strategic sites would provide regional coverage for Alaska, the central Pacific Ocean, the U.S. West Coast, and the Gulf of Mexico. Coverage of the U.S. East Coast and Great Lakes regions will be the responsibility of NASA operations. Strategic sites are co-located with CoastWatch regional nodes to take advantage of CoastWatch communications and satellite processing resources. The ocean color acquisition and science sites selected in FY 1993 were: the National Marine Fisheries Service Southwest Fisheries Science Center (NMFS/SWFSC) - Honolulu Laboratory (Honolulu, HI), the NMFS/SWFSC at La Jolla, CA , and the NMFS Southeast Fisheries Science Center - Mississippi Laboratories (Stennis Space Center, MS). Funding for the fourth site, the NWS Office in Anchorage, AK, was deferred pending future funding availability.

Strategic sites are required to provide for data acquisition schedules and processing appropriate to establishing a comprehensive Level 1A data archive. Level 1A high

---

[1] *There are several types of data and data products resulting from various degrees of data processing or data blending. The "raw data" captured by a receiving station is processed to Level 0, a format required by NASA's processing software (SeaDAS). Level 1A data is raw data at full resolution, time-referenced and annotated with ancillary information, radiometric and geometric calibration coefficients, and georeferencing parameters. Level 1B is Level 1A data with radiometric and geometric coefficients applied. Level 2 is derived from Level 1 data, such as diffuse attenuation coefficients, water-leaving radiances, pigment concentrations, etc. Level 3 are global gridded products derived from Level 1 and other data.*

resolution picture transmission (HRPT) data will be transmitted regularly to a central archive located at Goddard Space Flight Center (GSFC). The three sites also support collaborative research directed to regional coastal algorithm development.

Fiscal Year 1994

Implementation of the Ocean Color Project involved continued investment in data acquisition preparations at Hawaii, West Coast, and Gulf of Mexico strategic sites. Funding for the purchase of data storage media at the three established acquisition sites was made available through an FY 1993 ESDIM grant[2]. SeaWiFS launch delays allowed for an investigation into establishing the Alaska acquisition site at a reduced cost to NOAA through leveraging facilities at the NWS Anchorage Office. A revised proposal (the original proposal was considered and revised as part of the 1993 solicitation process) was submitted to COP in FY 1994 and that site will be funded in FY 1995.

Funding for collaborative science efforts, specifically in coastal algorithm development was also continued. Future science endeavors will be guided by the strategies developed at the Interagency Coastal Ocean Color Workshop, held January 11-12, 1994. This workshop was coordinated by NASA, NOAA, and USN representatives; participants included field scientists involved in coastal ocean color research. The workshop proceedings are contained in a final report, identifying strategies for the development of coordinated and scientifically sound, ocean color research and application activities.

The CZCS experience continues to demonstrate that much of the scientific utility of ocean color data is realized retrospectively. The accuracy and comparability of ocean color data products will depend upon the ongoing activity of coastal (Case 2) algorithm development; and so the reprocessing of SeaWiFS data will also be a continuing activity. Reprocessing requires an accessible, comprehensive data archive. For this purpose, COP provided support for the establishment of a collaborative NOAA/NASA SeaWiFS HRPT Level 1 data archive at GSFC.

Within the context of continuing and expanding NOAA's ocean color science efforts in FY 1994, a proposal was submitted to establish a science based ocean color processing, product development, and product archive capability for the East Coast and Great Lakes regions. This capability, as proposed, will be located at the NOAA Center for Coastal Ecosystem Health, Charleston, NC.

Fiscal Year 1995

This is the last year of funding for the 3-year proposals approved for the West Coast, Hawaii, and Gulf of Mexico sites. All sites will continue to upgrade processing software and participate in data file transfer and communications testing with the

---

[2] *1993 ESDIM proposal, "Archival Support for Coastal 1-km SeaWiFS Data," Kent Hughes, principal investigator.*

SeaWiFS Project and the NOAA/NASA SeaWiFS data archive. The Alaska site will be established at the NWS Alaska Office, Anchorage, AK and is expected to be data ready by commencement of the data stream (90 days after sensor launch). In addition, planning for a cooperative NOAA Remote Sensing Research Program will begin during this fiscal year.

E. Management Structure

Proposals were solicited in March 1993 from investigators at the four strategic sites (Alaska, Hawaii, West Coast, and Gulf of Mexico). Proposals were to address the set up for data acquisition, data archive, and applications of SeaWiFS LAC data in U.S. coastal waters. Investigators were also encouraged to include collaborative research focussed on coastal (Case 2) algorithm development. Proposals were evaluated by a six-member NOAA Ocean Color Review Panel and a three-member External Review Panel (see Appendix 1 for panel membership). Three of the four proposals were revised and funded in FY 1993.

Funding was awarded for three years. Funding for the second and third years was based on submission of revised proposals, containing annual progress and workplans (including progress and workplans for collaborative research). The revised proposals were reviewed by a subset of the FY 1993 NOAA Panel; revised proposals for FY 1995 were reviewed by the COP Ocean Color Project Coordinator.

The management structure for future Ocean Color Project activities, including research, will be defined in FY 1995 as part of the NOAA Remote Sensing Research Program. This will be a cooperative effort and it is anticipated that NOAA line organizations will participate in planning, support, and implementation.

II Fiscal Year 1994 Report

A. Progress - *Strategic Sites, Algorithm Development, and Data Archive*

Hawaii Strategic Site

The Hawaii Strategic Site is located at the NMFS Southwest Regional Science Center - Honolulu Laboratory. Funding for the Hawaii NOAA Ocean Color site began in the third quarter of FY 1993. Funding was directed toward initial equipment purchases and support for non-NOAA collaboration. The collaborative research is in cooperation with the University of Hawaii. See the FY 1995 revised proposal for this site for details (Appendix 2).

In FY 1994, the Hawaii site concentrated efforts on readying computer and network equipment and software for acquiring, processing, archiving and distributing SeaWiFS data. In addition, the Hawaii site continued support for research to develop ocean

color algorithms specific for local waters.

In order to accomplish the goals of acquiring, processing, and redistributing ocean color data, the Hawaii site developed the following tasks for FY 1994:

a. *Gain access to the National Weather Service (NWS) High Resolution Picture Transmission (HRPT) receiving station to capture raw SeaWiFS L-band data*[3]. A signed Memorandum of Agreement (MOA) between the NWS and the Hawaii site has been obtained. This MOA states that the NWS will allow the Hawaii site to use the NWS satellite receiving station, located at Ewa Beach, to acquire SeaWiFS data.

b. *Acquire hardware and software to decode SeaWiFS L-band data to Level 0.* In order to process raw SeaWiFS L-band data to Level 0 data using the NWS satellite receiving station, additional hardware and software components were installed.

c. *Design and implement a network to transfer SeaWiFS data from the NWS to the Hawaii site.* A T1 communication system and Wide Area Network (WAN) connecting Ewa Beach and the Hawaii Site has been implemented.

d. *Acquire computer equipment to process and store SeaWiFS data.* An SGI Indigo workstation was installed and made operational during FY 1994. This hardware system fulfills the requirements outlined by the NASA SeaDAS Development Team for workstation hardware. Also, a 20 GB jukebox was installed and will store approximately 200 LAC passes or six months of data.

e. *Obtain software to process SeaWiFS data to higher level data products (e.g., Level 1A, 2 and 3 products).* Software components necessary to process SeaWiFS data have been installed as well as earlier versions of the SeaDAS software. The final distribution of SeaDAS software is awaited.

f. *Test SeaWiFS processing software using simulated data.* SeaWiFS simulation data are now available from the SeaDAS Development Team and may be accessed over Internet using FTP (file transfer protocol). Testing of SeaWiFS simulation data will be concurrent with testing of the newest version of SeaDAS software.

g. *Acquire ancillary data needed in the SeaWiFS bio-optical algorithms for the development of SeaWiFS data products.* During the recent SeaWiFS training workshop, sources for ancillary data were identified. Zonal and meridional winds, atmospheric pressure and relative humidity will be acquired from the National Meteorological Center (NMC). Ozone data will be acquired from the Total Ozone

---

[3]*The SeaWiFS LAC data will be transmitted by the SeaStar spacecraft using an L-band downlink. The L-band downlink are encrypted data in a format compatible with the HRPT data from the Advanced Very High Resolution Radiometer (AVHRR) sensor. These data are often referred to as "raw LAC" data.*

Mapping Spectrometer (TOMS) project. Arrangements are now being made to acquire these ancillary data directly from the data source over Internet.

h. *Develop procedures to transfer data in near real-time to the NOAA/NASA SeaWiFS archive.* Internet has been used to automatically transfer AVHRR satellite data to the NOAA/NODC central archive. Similar software and methodology will be used to transfer SeaWiFS data to the joint NOAA/NASA ocean color archive.

i. *Attend SeaDAS and HRPT site training workshops at Goddard Space Flight Center in Greenbelt, Maryland.* A representative from the Hawaii site attended both the SeaDAS and HRPT site training workshops held at GSFC. The workshop familiarized personnel with SeaDAS software, HDF data formats, IDL software, SeaWiFS sensor characteristics, SeaWiFS navigational routines, Level 1 through Level 3 LAC data processing, HRPT site requirements and hardware, and ancillary data sources such as gridded pressure fields and sensor calibration coefficients.

West Coast Strategic Site

This site is located at the NMFS Southwest Fisheries Science Center, La Jolla. The algorithm development is a collaboration with the University of California - San Diego, Scripps Institute of Oceanography. Refer to this site's FY 1995 Proposal in Appendix 3 for details.

System administration for the SGI Indigo2 was implemented during FY 1994 and included establishing account directories, systems security, and upgrading operating system software. The RAM of the SGI has been expanded to 128 MB and a used 20 GB optical drive to serve as a backup data archive has been installed. Site personnel attended SGI sponsored classes in UNIX system administration, the SEADAS tutorial and HRPT workshops at NASA/GSFC.

The request for bid to contract for acquisition of SeaWiFS data from a private vendor has been delayed to FY 1995; this is the result of launch delays. Funds for this purpose were carried over into FY 1995.

Gulf of Mexico Strategic Site

The site is a collaborative effort between the NMFS Southeast Science Center Mississippi Laboratories and the Naval Research Laboratory (NRL), both located at Stennis Space Center. For specific details on progress at this site, refer to the FY 1995 Proposal in Appendix 4.

All hardware for the NOAA facility is now installed and fully operational. This includes the Silicon Graphics Indigo workstation (128 MB memory, 3.2 GB hard disk, CD ROM, and extend warranty), PV-WAVE software license, SGI Network File System and

optical disk jukebox. All hardware is also fully installed and operational on the NRL network backbone and file transfer speed tests between NMFS/SEFSC and NRL were completed with an acceptable level of transfer speed.

At NRL, a SeaSpace satellite receiving system has been installed and is operational at SSC. Currently all AVHRR Gulf of Mexico passes are collected and stored. Passes with 25% or more Gulf of Mexico coverage are placed into a database using an automatic batch processing system developed for this project. This database is full resolution (1 km) and is available about 30 minutes after the overpass. The data are then made available on the Mosaic World Wide Web server. This is the anticipated mode of operation for the SeaWiFS data stream.

FY 1994 activities concentrated on the acquisition and installation the software required for data formatting, transfer, and processing. Software development was focused in two areas: 1) automatic batch processing, and 2) customized data analysis. Software was installed to automatically process regional areas for both ocean color (CZCS) and sea surface temperature (SST) into an online database. The automatic processing system enables new algorithms to be tested on large amounts of satellite data. This software will be used to collect and process the SeaWiFS data at SSC.

Algorithm Development

University of Hawaii

Dr. R. Bidigare of the University of Hawaii is coordinating the effort to develop algorithms to estimate pigment biomass and primary production for local waters using ocean color satellite data. The research is centered on the use of radiative transfer models to develop improved algorithms for chlorophyll and detrital pigments, and primary production through development of an absorption-based production model. Radiative transfer models will be used to simulate the water leaving radiance as a function of water column optical properties. The radiances modelled will include those wavelengths seen by SeaWiFS.

The field effort is focussed on collecting data to describe the specific optical properties of pure water, phytoplankton, and detritus. The development of accurate regional algorithms for estimating chlorophyll and detritus concentrations requires local measurement of atmospheric and *in situ* optical and particle properties. This work leverages on the Office of Naval Research (ONR)/NASA support to the University of Hawaii (Dr. Bidigare is a member of the SeaWiFS Science Team) for characterization of aerosols to improve regional atmospheric algorithms, the *in situ* optical data collected by NOAA/NASA-funded Marine Optical Buoy (MOBY) overseen by Dennis Clark of NOAA/NESDIS, and the pigment data furnished by the NSF-funded Hawaii Ocean Time Series.

Modeling efforts have already shown that Raman scattering from relatively clear waters must be taken into account when using radiance measurements from the

SeaWiFS sensors. Their collaborative work with the MOBY project will provide essential calibration and validation data for all optical algorithm development for the Hawaiian area. With respect to the problem of determining the vertical distribution of chlorophyll from satellite data, preliminary results suggest that SeaWiFS may have insufficient wavelengths and sensitivity to estimate the vertical distribution of pigments.

The numerical model simulating radiative transfer with chlorophyll profiles is running. The incorporation of detritus and coastal runoff components is in progress. The basic equations for estimating primary productivity are determined; the implementation is in progress. The initial development of a local aerosol algorithm has been completed.

NOAA funded investigators will participate in the MOBY quarterly cruises. The productivity, pigment, and photosynthetic parameters measured, along with optical data from MOBY (deployed February 1994) will facilitate testing and refinement of productivity models for coastal Hawaii. The radiative transfer and productivity modeling will continue as more buoy and ship data become available. The development, testing, and refinement of models in advance of the SeaWiFS launch will reduce the time required to adapt models for SeaWiFS after the data stream starts.

Scripps Institution of Oceanography

Algorithm research is headed by Dr. B. Greg Mitchell of the University of California - San Diego, Scripps Institution of Oceanography (USCD/SIO). The focus of this effort is the development of methods for improving estimates for surface pigments and primary productivity in Case II waters. This involves development of improved multi-spectral algorithms, corrected for dissolved and detrital absorption, pigment package effects, and suspended inorganic solids. Extensive data sets of *in situ* multi-spectral optics (absorption and attenuation at 10 wavelengths), particle optics, suspended material, and phytoplankton pigments are required. Most of these data are being collected on quarterly CalCOFI cruises and monthly 1-day cruises off the SIO Pier at La Jolla.

Despite the lack of a satellite data stream, the optical data is being modeled to first develop reliable *in situ* algorithms. The relationships among dissolved and particulate constituents, and the optical properties of coastal waters is still being defined and modelled. The optical classification of Southern California Bight waters is critical, pre-launch information. The optical data collected will be used to establish an objective, mechanistic criterion for classification of water types, this criterion will in turn be related to the water leaving radiances observed by SeaWiFS. This will automate the process of algorithm selection.

This work leverages heavily on ongoing NOAA and NSF funded optical research, and NOAA and California State support of the California Cooperative Oceanic Fisheries Investigations (CalCOFI). COP's funding expands measurements to Case II waters, adding particulate inorganic compounds to the CalCOFI data set and supporting the

monthly 1-day cruises off the SIO Pier. The Dr. Mitchell is a member of the SeaWiFS Science Team and is currently funded by NASA for development of Case I algorithms.

Efforts over the last year have been concentrated in the principal areas of:

a. *Compatibility of the SIO data system with NMFS/SWFSC and GSFC data systems.* The SeaWiFS data system at SIO has been upgraded to fully conform to SeaDAS requirements. This system is capable of serving as an operational backup should the NMFS/SWFSC system develops hardware problems.

b. *Collection and analysis of dissolved and particulate materials in Case II waters of the California coastal zone.* Studies were initiated on the March 1994 CalCOFI cruise to look at relationships between dissolved organic matter (DOM) fluorescence and absorption to develop a more sensitive assay of DOM absorption and improve absorption coefficients. These methods have been and will be applied to the CalCOFI grid in future cruises. These data will be used in the interpretation of NASA-funded *in situ* optical data.

c. *Evaluating algorithms for application of ocean color remote sensing in the California Current.* Re-processed CZCS West Coast Time Series data is now available. The CalCOFI data base and newly acquired optical data are being used to determine the reasons for historical overestimate of pigment concentrations by CZCS imagery. The lines of research being pursued are in single versus multiple-scattering atmospheric corrections, and cloud masking algorithms. Analysis of *in situ* bio-optical data is in progress; spectral particulate absorption per chlorophyll analysis is complete. The evaluation of cloud screen problems in the CZCS data set should result in more accurate methods of cloud screening for SeaWiFS data.

Stennis Space Center

Algorithm development for the Gulf of Mexico is a collaborative effort of NOAA/SEFSC and Robert Arnone of the Naval Research Laboratory. CZCS and AVHRR satellite data have been used as test data streams in preparation for SeaWiFS. The CZCS processing for atmospheric removal and extraction of coastal optical properties has been improved through the use of recent *in situ* measurements in the Gulf of Mexico. Measured optical properties collected on a Navy/NASA cruise for SeaWiFS calibration/validation in April 1993 have been used to tune the coastal optical algorithms. An iterative approach using band ratios of 443, 520, and 550 nanometers was used to extend CZCS ocean color data into turbid coastal areas in the Gulf. These improvements were incorporated into the batch processing and database development.

Improved algorithms for coastal waters were also applied to CZCS data and databases generated for the Gulf of Mexico, Arabian Sea, and the Sea of Japan. This software is now being extended to handle the SeaWiFS modules through NASA's SeaDAS program.

NOAA/NASA SeaWiFS Level 1A Data Archive

The NASA SeaWiFS Project has agreed to coordinate and facilitate the transmission of SeaWiFS HRPT Level 1A data from four NOAA coastal acquisition sites to the SeaWiFS Project via Internet (see the project report in Appendix 5). The Goddard HRPT station will provide SeaWiFS HRPT data to the SeaWiFS Project to complement NOAA data acquisition in building a SeaWiFS high resolution data archive for U.S. coastal waters. The SeaWiFS Project will ensure that the NOAA HRPT and Goddard HRPT data files are forwarded to the Goddard Distributed Active Archive Center (DAAC) in accordance with standard procedures for exchange of SeaWiFS data.

The Goddard DAAC will ingest and catalog the SeaWiFS HRPT Level 1A data received from the SeaWiFS Project. The Goddard DAAC will provide cataloging and user interface services for the distribution of the SeaWiFS HRPT level 1A data to the user community.

Implementation of three major coordinated activities required to achieve the objective of a NOAA/NASA archive of SeaWiFS HRPT data were initiated in FY 1994. Those activities are:

a. *SeaWiFS Project Interface with NOAA HRPT Acquisition Sites.* The SeaWiFS Project is coordinating with NOAA sites to ensure that: sites have obtained proper licensing for data acquisition and processing; data formats and processing are compatible with SeaWiFS Project requirements; data communications links are adequate and NOAA sites have the capability to provide for backup data; and SeaWiFS data processing software is installed locally to generate standard SeaWiFS HDF format Level 1A data products, consistent with archive requirements.

Coordination with the NOAA sites to support the NOAA/NASA SeaWiFS archive is ongoing. Three sites (Hawaii, West Coast, and Gulf of Mexico) have obtained NASA approved real-time HRPT licenses and have the Internet connectivity necessary to support data file transmission to the SeaWiFS Project. The Level 0 to 1A data processing software has been installed and tested at two of the sites (West Coast and Gulf of Mexico).

SeaWiFS simulated data file automated interfaces between three of the NOAA sites, the SeaWiFS Data Processing System and the Goddard DAAC have been tested in the SeaWiFS Project end-to-end testing scenarios. These tests have successfully demonstrated the automated retrieval of data files from the NOAA sites, their ingest into the SeaWiFS data processing system for cataloging and process tracking, the automated transfer of the files to the Goddard DAAC, and their retrieval from the DAAC cataloging and user interface (IMS) system.

NOAA FTE support to the SeaWiFS Project has been in place since September 13,

1993 and will continue as a two year assignment.

b. *Goddard DAAC Interface with the SeaWiFS Project.* The Goddard DAAC has been establishing and communicating its data ingest requirements to the SeaWiFS Project. Communication between the Goddard DAAC and the SeaWiFS Project continues. Two members of the DAAC Ocean Color Data Support Team (OCDST) attend regular SeaWiFS meetings and the NOAA representative from the SeaWiFS Project attends regular DAAC OCDST meetings.

c. *Interface of the Goddard DAAC IMS (Information Management System) and Data Archive with the User Community.* The Goddard DAAC will establish user interface (IMS) access to, and distribution services for, the HRPT Level 1A data in accordance with SeaWiFS Project agreements. The IMS is operational and ready to support SeaWiFS HRPT data. In order to provide additional data archive and staging capacity for HRPT data the DAAC has procured additional tape and disc storage. Password issuance to authorized users will commence immediately after launch and will be completed within 30 days following launch.

B. Accomplishments

All sites have successfully participated in data file transfer and communications tests with the NASA SeaWiFS Project and NOAA/NASA SeaWiFS archive.

Over 150 stations of complete optical, pigment, particle absorption information, and COP funded dissolved absorption (to be expanded with ONR funding) have been collected in the California Current System.

Regional algorithms for Gulf of Mexico waters have been implemented for the CZCS archive.

An automated tape library system has been procured to accommodate the NOAA HRPT site data files at the Goddard DAAC.

An interagency Coastal Water Color Workshop was convened January 11-12, 1994. The resulting report provides guidance for future investments in ocean color research (see reference the Applications section) and established the points of contact for interagency coordination.

C. Applications

The CZCS ocean color and AVHRR products at the Gulf of Mexico Site have been extended to the general scientific community through the Mosaic WWB server. The CZCS and AVHRR databases, NRL journal publications, and project and software descriptions are available on the NRL Ocean Color Mosaic Home Page

(http://www7240.nrlssc.navy.mil/ocolor).

Abstracts:

An evaluation of overestimation of pigments in off-shore waters of the California Current. M. Kahru and B. Greg Mitchell. Presented at the 1994 CalCOFI Conference.

SeaWiFS and CZCS algorithms for phytoplankton pigments and particle absorption in the California Current. B. Greg Mitchell, E. Brody and M. Kahru. Presented at the 1994 CalCOFI Conference.

Manuscripts Submitted or Presented:

Oriol, R.A., P.M. Martinolich, and R.A. Arnone. Development of an 800 meter (M) bio-optical database from satellite ocean color for applications in coastal processes. Presented at the Second Thematic Conference on Remote Sensing for Marine and Coastal Environments, 31 Jan. - 2 Feb. 1994.

Waters, K.J. Effects of Raman scattering on the water-leaving radiance, *J. Geophys. Res.* Submitted March 1994.

Waters, K.J., and R.C. Smith. Converting apparent to inherent optical properties: How well can we do? *J. Geophys. Res.* Submitted March 1994.

Reports:

Research and Management Requirements for Environmental Monitoring of Coastal Waters Using Ocean Color Satellites. A report from the Coastal Water Color Workshop, January 11-12, 1994, sponsored by the NOAA Coastal Ocean Office.

D. Critical Evaluation of Project Performance

The performance of the Strategic Sites can be evaluated by each site's ability to accomplish the following three objectives:

1) Consistent acquisition, processing, and archiving of SeaWiFS LAC data.

2) Distribution of processed SeaWiFS LAC data to authorized users.

3) Development and implementation of accurate regional algorithms.

In evaluating the performance of an operational data acquisition program, perhaps the best measurement of performance is the consistency with which data are acquired, processed, archived and distributed. The sites should aim to: 1) acquire at least 95% of the daily SeaWiFS passes; 2) process these data to Level 1A; and 3) successfully

archive at least 95% of the Level 1A data at the NOAA/NASA SeaWiFS archive. Thus, operational performance can be objectively evaluated by measuring the percentage of data successfully acquired and delivered to the archive. Performance can also be subjectively evaluated by Level 2 product production and consistency of delivery to authorized users (researchers, resource managers, etc.).

The performance of the research and algorithm development aspects of this program, is evaluating the ability of these locally developed algorithms to improve upon present algorithms for estimating chlorophyll and related pigment concentrations. Evaluations can be made by comparing *in situ* measurements of ocean color properties with those estimated using NASA algorithms and those estimated using the locally developed algorithms.

Based on the progress reported, it is expected that the four strategic sites will be data ready by the time the SeaWiFS data stream begins. The parameters for critical evaluation of performance will be applied when the actual data capture, processing, and data and data product distribution begin.

E. Response to Reviews

In May 1994, the National Academy of Science Sciences Panel on the NOAA Coastal Ocean Program reviewed the implementation and accomplishments of the Ocean Color Project. They expressed approval of the approach to data acquisition and algorithm development. The Panel also strongly urged COP to find the resources to fund an Alaska Strategic Site. Through the cooperation of the NWS Alaska Regional Forecast Office and long distance transmission capabilities provided by NESDIS, it is possible to implement the Alaska Strategic Site this fiscal year.

The West Coast Strategic Site is the only site in the situation of having to arrange for SeaWiFS HRPT data purchase from a private vendor. Inquiries have been made into the potential for acquiring data from the NWS Redwood City, now Monterey Office. The NWS is still adjusting to the relocation of operations. At this time, acquiring SeaWiFS data at this office is a low priority. The options for the near future are to proceed with the data purchase or investigate the purchase of an antenna and associated hardware for the West Coast Site.

F. FY 1994 Spending Reports

Ocean Color Program FY 1994 Budget Summary
The individual strategic site and archive spending plans are presented below.

	dollars in thousands
Strategic Sites	
Hawaii	137.1
West Coast	98.7
Gulf of Mexico	57.4
NOAA/NASA SeaWiFS Data Archive	265.0
PROGRAM TOTAL	**557.2**

Hawaii Strategic Site

R. Michael Laurs, Principal Investigator
Craig Motel, Operations Manager
NMFS Southwest Fisheries Science Center - Honolulu Laboratory

Robert Bidigare, Principal Investigator
Kirk Waters
Department of Oceanography - University of Hawaii

FY 1994 funding for the Hawaii Site operations was $137.0K. Due to the delayed launch of the SeaWiFS satellite, $35.0K of these funds have been carried over as part of a contract with the University of Hawaii - Joint Institute for Marine and Atmospheric Research. Expenditures were distributed as follows:

	dollars in thousands
Labor[1]	16.5
Contracts[2]	112.4
Equipment	3.7
Supplies	0.8
Travel	3.6
TOTAL	**137.0**

---

[1]Labor	-- M.Laurs at 5%, C.Motell at 20%	
[2]Contracts	-- UH Algorithm Development	$ 55.0K
	-- Communication (Internet/T1 lines)	$ 12.5K
	-- Carry-over	$ 35.0K
	-- Software (scheduler/frame formatter)	$ 8.0K
	-- Site preparation	$ 3.9K

West Coast Strategic Site

Ronald Lynn, Principal Investigator
Ken Bliss, Operations Manager
NMFS Southwest Regional Science Center - La Jolla, CA

B. Greg Mitchell, Principal Investigator
Mati Kahru
University of California San Diego, Scripps Institute of Oceanography

	dollars in thousands
USCD/SIO Grant	50.1
Travel	4.0
Equipment (DAT drive)	1.5
Equipment Maintenance	5.6
Supplies and furniture	2.5
Carry over to FY 1995*	35.0
TOTAL	**98.7**

* Funds for data purchase and some salary for the operations manager were not used as a result of SeaStar launch delays.

Gulf of Mexico Strategic Site

Thomas Leming, Principal Investigator
Charles Morgan, Operations Manager
NMFS Southeast Fisheries Science Center, Stennis Space Center, MS

Robert Arnone, Principal Investigator
Naval Research Laboratory, Stennis Space Center, MS

	dollars in thousands
64 MB memory expansion to SGI Indigo	4.0
IDL license	3.0
Data storage media	2.0
Paper, film, reproduction	2.0
Equipment maintenance contract	3.4
1/2 NRL contract programmer	40.0
Travel	4.0
TOTAL	**57.4**

NOAA/NASA SeaWiFS Level 1A Data Archive

Paul Chan, Head Goddard Distributed Active Archive Center
Gene Feldman, Data Systems Manager, SeaWiFS Project Office
NASA Goddard Space Flight Center, Greenbelt, MD

Goddard DAAC Requirements

	dollars in thousands	
Hardware and Media	171.5	
Software Development	11.0	
Operations Staffing Support	27.5	
Subtotal		210.0
NOAA personnel support - 1 FTE (or 50.0K)		

SeaWiFS Project Office Requirements

Mass Storage Device (8 mm Jukebox)	55.0	
NOAA personnel support - 1 FTE		
Subtotal		55.0
Total Funds Received		**265.0**

III. FY 1995 Implementation

A. Objectives

The common objectives of the NOAA strategic sites for this fiscal year are:

To be operationally prepared for acquisition, processing, and timely distribution of SeaWiFS LAC data for the coastal U.S. by commencement of the data stream.

To continue supporting collaborative research in the bio-optical characterization of surface coastal waters and development of regional algorithms for the processing of ocean color data.

B. Strategic Sites

Hawaii Strategic Site

The workplan of the Hawaii Strategic Site is focussed on three objectives:

a. *To assemble the operational system at Ewa Beach to acquire L-band SeaWiFS LAC data, process these data to Level 0, and transfer the Level 0 data to the Hawaii Site.* The activities supporting the first objective include completion of the installation and testing of acquisition hardware and communications at the NWS Ewa Beach HRPT receiving station.

b. *To store and deliver Level 1A data to the NOAA/NASA archive in near real-time.* The communications between the Hawaii Site and the NOAA/NASA archive will be tested; NASA will provide the software (SeaDAS) to process Level 0 data to the required Level 1A.

c. *To process Level 1A data to Level 2 products, and make these products available to authorized users and the SeaWiFS product archive.* Activities in support of this objective will include acquisition of ancillary data, including archiving AVHRR HRPT data. There will be continued collaboration with SIO researchers to test locally developed ocean color algorithms for application to the SeaWiFS data stream when it commences.

University of Hawaii investigators will continue the radiative transfer modeling with attempts to include the optical properties of additional in-water constituents, particularly those associated with coastal waters. The data from the MOBY buoy will be used for comparison of radiative transfer models, in conjunction with *in situ* measurements of the pigment concentrations. Investigators will also begin to incorporate primary production models based upon SeaWiFS data (as it becomes available) and other satellite data, and compare model estimates to *in situ*

measurements at the MOBY site.

West Coast Strategic Site

The West Coast Strategic Site will continue installation and testing of NASA SeaDAS processing software. Simulated SeaWiFS large volume files will be transferred to the NOAA/NASA archive.

A contract for purchase of Level 1 SeaWiFS LAC data will be issued during FY 1995. The purchase of a receiving station for the West Coast Site is also being investigated.

Algorithm development will continue as the optical data set expands. This development will focus on two hypotheses: 1) that inadequate cloud screening results in errors causing pigment overestimates, and 2) that bio-optical algorithms traditionally used by NASA overestimate offshore pigment concentrations, a result of the presence of picoplankton with high absorption per chlorophyll. Complete analysis of the effect of spectral absorption per chlorophyll on reflectance algorithms. Analysis of the CZCS-WCTS data and algorithms will continue.

SIO investigators will evaluate the general SeaDAS algorithms for producing Level 2 data sets. Modified algorithms specifically geared towards California Current waters will be implemented based on *in situ* data sets. System inter-operability (SIO - GSFC - SWFSC) testing will continue.

The newly purchased AC-10 (10-band) light meter, measuring spectral absorption and beam attenuation, will be integrated into the optical profiling system containing the NASA instrument which measures spectral reflectance. This combined data set will greatly improve the characterization of Case 2 waters. SIO investigators will participate in a NOAA survey cruise in September and continue participation in CalCOFI cruises and SIO Pier sampling.

Gulf of Mexico Strategic Site

The goal at this strategic site is to acquire, process, and archive every overpass, process to Level 3 data products, transfer Level 1A data to the NOAA/NASA archive, and archive Levels 2 and 3 products in an automatic mode. In support of that goal, NMFS/SERSC will continue installation of the required hardware and software for total NRL-NOAA processing compatibility, and collect Gulf-wide chlorophyll data for ground truth of SeaWiFS algorithms, as SeaWiFS data become available. NRL will continue its research to improve algorithms for Case 2 waters.

Alaska Strategic Site

The Alaska Strategic Site was identified at the start of the NOAA Ocean Color Program but limited resources delayed its implementation. The Alaska site will be implemented this year based on the revised workplan and budget in Appendix 6. This

site will leverage heavily on the existing high resolution image processing system (HIPS) at the NWS Alaska Region for the capture, processing, distribution, and display of SeaWiFS HRPT data. Distribution of SeaWiFS data and products will be facilitated by an existing T-1 line from the Anchorage HIPS to the NOAA Science Center in Suitland.

It is projected that four passes of SeaWiFS data per day can be captured using the NWS HIPS system without degradation to current operations, and that four passes per day will meet user needs. Methods will be established for the ingest, processing, and production of SeaWiFS data and products using a combination of NASA and Global Imaging software. This aspect of the Alaska Site data acquisition is similar to that of the Hawaii Site; the principal investigators at both locations are working closely to share common information and technology.

The Anchorage HIPS system will require some hardware and software modifications in order to accommodate the ingestion and preprocessing of SeaWiFS data. The SGI workstation requested will perform the Level 1 processing and will be integrated into the HIPS network. Once this is accomplished, testing data file transfer and communications with the SeaWiFS Project and the NOAA/NASA archive will begin.

No science effort at this site will be initiated this year. It is a programmatic decision of the COP to postpone algorithm development, a result of SeaWiFS launch delays and limitations in resources.

NOAA/NASA SeaWiFS Archive

The GSFC/DAAC will continue simulated data file transfers with the NOAA strategic sites and the SeaWiFS Project. The NOAA/NASA archive will be ready before launch.

Ocean Color Program Milestones

The major project milestones are listed below. For more detailed information and milestones for each of the strategic sites, refer to the proposals contained in the Appendices.

First Quarter

The Hawaii Strategic Site tests communications to the NOAA/NASA archive.

Second Quarter

Installation of hardware, including OSC decoder box (pending delivery by Orbitical Sciences Corporation) at the Ewa Beach HIPS.
Completion of CZCS algorithm analyses for West Coast coastal waters.

Third Quarter

Implementation of NASA SeaDAS processing software at Hawaii, West Coast, and Gulf of Mexico Sites.

Fourth Quarter

Test full operability of the acquisition systems, processing software, and Level 1 data file transfers.

Initial operational testing using SeaWiFS data (pending launch).

Begin file transfer and communications testing at the Alaska Strategic Site.

The production of Level 2 and 3 data products will begin within six months of SeaWiFS launch.

C. Budget

The SeaWiFS Project recommended the addition of a 9.0 GB hard disk memory to the SGI Indigo Extreme workstations to accommodate data processing software. This adjustment was made to the budgets of the three existing strategic sites.

FY 1995 Budget for NOAA Strategic Sites
Individual budgets for the strategic sites are presented below.

	dollars in thousands
Hawaii (operations and research)	92.8
West Coast (operations and research)	85.7
Gulf of Mexico (operations and research)	55.9
Alaska (operations only)	82.0
TOTAL	**316.4**

Hawaii Strategic Site

The proposed operations in FY 1995 will require a total budget of $134.4K. Carry-over funds from FY 1994, $35.0K, reduces the amount of funding needed to $99.4K. A breakdown of the budget by categories follows:

	dollars in thousands
Labor[1]	35.0
Contracts[2]	69.7
Equipment (additional optical storage)[3]	16.1
Supplies	2.0
Travel	5.0
Total	127.8
Total Request	**92.8**

---

[1]Labor -- $35.5K will be available from ocean color carry-over which will be used to fund a JIMAR computer specialist to operate the site after a successful SeaWiFS launch.

[2]Contracts -- Shared cost of Internet and T1 leased-lines is $4.8K; $2.5K for maintenance of computer equipment, and $62.4K for University of Hawaii research.

[3]Equipment -- $12.5 K for additional optical disk storage; $3.6K for 9 GB hard disk.

West Coast Strategic Site

	dollars in thousands
Data Purchase	30.0
Travel	3.0
Supplies and Materials	2.0
Labor	2.5
Computer maintenance	5.0
IDL maintenance	0.5
Cruise supplies	3.5
Contracts	12.5
Equipment and Software	7.0
UCSD/SIO JIMO Contract	54.7
Total	120.7
FY 1994 Carryover	35.0
Total Request	**85.7**

Gulf of Mexico Strategic Site

	dollars in thousands
9.0 GB disk drive	4.0
Supplies and Materials	
data storage media	3.0
paper, film, reproduction	2.0
Equipment maintenance contract	3.5
IDL software maintenance	0.5
Contract*	40.0
Travel	3.0
Total Request	**55.9**

* 1/2 contract programmer for NRL collaborator.

Alaska Strategic Site

	dollars in thousands
Hardware	
receiver/synchronizer upgrade	5.0
cables, etc.	1.0
SGI 2XZ (R4400 150 MHz)	45.0
tower	10.0
HIPS software upgrade and installation	21.0
Total Request	**82.0**

IV. Project Outlook

A. Timeline

Fiscal year 1995 will have been the third year of the original three-year funding effort. It is anticipated that by the end of this fiscal year, all four strategic sites will be data ready and operational. The progress reported in three of the four sites indicates this will be the case; assuming a launch date at the end of this fiscal year, the Alaska site should also be ready.

It is anticipated that outyear operational activities will continue with the same objectives of acquiring, processing, distributing and archiving data; however, the funding emphasis will change from funding algorithm development to funding data distribution, data product improvements, and product applications.

B. Future Requirements - FY 1996 Projected Budget, and Collaboration

In outyears, project resources will primarily be orientated to funding of labor and communication, acquiring storage media, and equipment maintenance. Savings in budget can be obtained by discontinuing support of non-NOAA research on algorithm development; however, there will be increases in the amount needed to fund labor for a fully operational SeaWiFS acquisition sites. Present funding of labor for ocean color support has been minimal because of the delay in the launch of the SeaWiFS satellite. In later years, labor will be needed full-time to support operational SeaWiFS data acquisition. For FY 1996 the following budget is as estimate of the operational costs of the Ocean Color Program. At this time, the budget for research is projected to be in a separate, joint NOAA Remote Sensing Science Program.

	dollars in thousands
Hawaii	90
West Coast	110
Gulf of Mexico	60
Alaska	40
NOAA/NASA Archive	50
FY 1996 Estimated Total	**350**

C. Transition of Operations

The three years of COP support to the Ocean Color Project is an important investment in the demonstration of the applications of ocean color data to coastal research and

resource management. By the end of this fiscal year, the hardware, processing software, data transmission paths, and, for the western U.S. and Gulf of Mexico, improved regional algorithms will be implemented and tested. As the data stream becomes available, this demonstration project will move into the "operational" production and distribution of SeaWiFS data and derived data products. Analogous to the successful transitions of the NOAA CoastWatch and Coastal Change Analysis Programs, the operational and management aspects of the Ocean Color Project will transition to participating NOAA line organizations (e.g., NMFS, NWS) and the remote sensing capability to be established at the Center for Coastal Ecosystem Health, respectively. COP will continue support in ocean color research and resource management applications through its investments in the Coastal Remote Sensing Science program to be implemented in FY 1995. The transition of the operational aspects of the Ocean Color Project will begin in FY 1996.

C. COP's Ocean Color Program Funding History

	dollars in thousands
FY 1993	358.4
FY 1994	557.2
FY 1995	316.4
TOTAL	**1,232.0**

Appendix 1 - Review Panel Membership

Ocean Color Review Panel

NOAA Participants:	John Calder (OAR) - Chair Jim Bisagni (NMFS Narragansett) Ronald Gird (NWS) Susan Ludwig (COP) Andrew Robertson (NOS) Alan Strong (NESDIS)
External Participants:	Frank Muller-Karger NASA Headquarters Washington, D.C. Richard Stumpf USGS Center for Coastal Geology St. Petersburg, Florida James Yoder University of Rhode Island Narragansett, Rhode Island

Appendix 5 - SeaWiFS Archive Report

Project Report for the
NOAA/NASA SeaWiFS Data Archive.

NOAA COASTAL OCEAN PROGRAM

OCEAN COLOR PROJECT

NOAA/NASA Cooperative Ocean Color Data Archive

in collaboration with

NASA, GODDARD DISTRIBUTED ACTIVE ARCHIVE CENTER
NASA, SEAWIFS PROJECT OFFICE

FY94 Funds - 265K

Project Report

Sept. 30, 1994

I. Objective

To establish a central archive and distribution center of Level 1A full resolution (1 km) SeaWiFS data for U.S. coastal waters.

II. Approach

The SeaWiFS Project will coordinate and facilitate the transmission of SeaWiFS HRPT level 1A data from four NOAA coastal acquisition sites to the SeaWiFS Project via Internet. The Goddard HRPT station will provide SeaWiFS HRPT data to the SeaWiFS Project to complement NOAA data acquisition in building a SeaWiFS high resolution data archive for U.S. coastal waters. The SeaWiFS Project will ensure that the NOAA HRPT and Goddard HRPT data files are forwarded to the Goddard DAAC in accordance with standard procedures for exchange of SeaWiFS data between the SeaWiFS Project and the Goddard DAAC.

The Goddard DAAC will ingest and catalog the SeaWiFS HRPT level 1A data received from the SeaWiFS Project. The Goddard DAAC will provide cataloging and user interface services for the distribution of the SeaWiFS HRPT level 1A data to the user community.

III. Work Plan

There are three major functional components which must coordinate development of implementation efforts to achieve the objective of a cooperative NOAA/NASA archive of SeaWiFS HRPT data. The major functional components are: NOAA Acquisition Sites, NASA SeaWiFS Project, and the NASA Goddard DAAC. Coordinating activities relevant to the HRPT data archive effort are addressed for each of the components. All work plan activities will be completed by the satellite launch date, currently scheduled for May 31, 1995.

1. SeaWiFS Project Interface with NOAA HRPT Acquisition Sites

Coordinate with NOAA sites to ensure that:

- *NOAA sites have obtained proper licensing for data acquisition and processing*
- *Frame formatter output is compatible with SeaWiFS Project Level 0 to 1A processing software requirements*
- *Data communications links are adequate for transmission of SeaWiFS HRPT data files*
- *NOAA sites have capability to provide for backup data transmission on 4mm or 8mm tape*
- *SeaWiFS data processing software is installed locally to generate standard SeaWiFS HDF format level 1A data products*

Preliminary tests of automated data file exchange between the NOAA sites and the SeaWiFS project will be conducted prior to launch.

SeaWiFS data processing system will be designed to accommodate NOAA site HRPT data volumes and metadata fields for data cataloging and transfer to the Goddard DAAC.

2. Goddard DAAC Interface with the SeaWiFS Project

Establish and communicate DAAC data ingest requirements to the SeaWiFS Project. Requirements include:

- *Ingested files must be in standard level 1A format*
- *HRPT level 1A files will be handled like all other SeaWiFS level 1A data*
- *Metadata must be in a SeaWiFS standard format*

Implementation of automated data file transfers of the HRPT site data files from the SeaWiFS Data Processing System to the DAAC.

3. *Goddard DAAC IMS (Information Management System) and Data Archive - Interface with the User Community*

The Goddard DAAC will establish user interface (IMS) access to the HRPT level 1A data in accordance with SeaWiFS Project agreements.

The Goddard DAAC will provide distribution services (FTP, 8 and 4 mm tape, or 9-track tape) for the HRPT data to researchers on the list of authorized users provided by the SeaWiFS Project.

The IMS will be designed to allow all DAAC users to view the HRPT granule metadata, authorized users will be able to retrieve SeaWiFS data by placing orders. The DAAC User Services Office will control authorized user access to the data.

Additional hardware and media will be procured to support the substantial increase in SeaWiFS HRPT data volumes resulting from the addition of the NOAA site data files.

Preliminary testing of DAAC user interface and data retrieval systems for SeaWiFS HRPT data will be conducted prior to launch.

IV. Funding Requirements

1. *Goddard DAAC Requirements*

Hardware and Media -	*171.5K*
Software Development -	*11.0K*
Operations Staffing Support -	*27.5K*

Total - 210.0K

NOAA personnel support - 1 FTE (or 50.0K)

2. *SeaWiFS Project Office Requirements*

Mass Storage Device (8 mm Jukebox) - 55.0K

Total - 55.0K

NOAA personnel support - 1 FTE

Total Funds Recieved FY94 - 265.0K

V. Status

1. SeaWiFS Project Interface with NOAA HRPT Acquisition Sites

NOAA FTE support to the SeaWiFS Project has been in place since Sept. 13, 1993 (2 yr assignment).

Coordination with the NOAA sites to support the HRPT archive is ongoing, three sites (Stennis, Hawaii, La Jolla) have obtained NASA approved real-time HRPT licenses and have the Internet connectivity necessary to support data file transmission to the SeaWiFS Project. The Level 0 to 1A data processing software has been installed and tested at two of the sites (Stennis and La Jolla).

SeaWiFS simulated data file automated interfaces between two of the NOAA sites, the SeaWiFS Data Processing System and the Goddard DAAC have been tested in the SeaWiFS Project end to end testing scenarios. These tests have successfully demonstrated the automated retrieval of data files from the NOAA sites, their ingest into the SeaWiFS data processing system for cataloging and process tracking, the automated transfer of the files to the Goddard DAAC, and their retrieval from the DAAC cataloging and user interface (IMS) system.

The SeaWiFS Data Processing System has incorporated NOAA site specific metadata fields for file identification and cataloging purposes, the automated processing system will accommodate procedures for ingest, validation, and transfer of NOAA HRPT level 1A data files.

The SeaWiFS Data Systems Element has purchased a Spectra Logic 8 mm automated tape library system to accommodate increased data processing loads incurred from the addition of the NOAA HRPT site data files.

2. Goddard DAAC Interface with the SeaWiFS Project

The Goddard DAAC has provided the SeaWiFS Project with metadata submission guidelines.

Communication between the Goddard DAAC and the SeaWiFS Project continues. Two members of the DAAC Ocean Color Data Support Team (OCDST) attend regular SeaWiFS meetings and the NOAA representative from the SeaWiFS Project attends regular DAAC OCDST meetings. These meetings are weekly and back to back.

It is anticipated that inter-team communications between the Goddard DAAC and the SeaWiFS Project will improve via these meetings over the next six months as launch approaches. This communication will continue at a high level until data ingest and distribution activities have been well streamlined following launch.

3. *Goddard DAAC IMS (Information Management System) and Data Archive - Interface with the User Community*

   The Goddard DAAC has developed a tool that will be used to issue passwords to authorized SeaWiFS (and HRPT data) users. SeaWiFS users are being encouraged to use the IMS in order to prepare for the issuing of passwords. Password issuance will commence immediately after launch and will be completed within 30 days following launch.

   The IMS is operational and ready to support SeaWiFS HRPT data.

   In order to provide additional data archive and staging capacity for HRPT data, the Goddard DAAC has procured an additional Metrum tape drive, 200 additional Metrum tapes and an additional disc drive with 8 GB of disc storage. In order to provide increased data distribution capacity, an additional 8mm tape drive with stacker has also been acquired.

NASA, GODDARD DISTRIBUTED ACTIVE ARCHIVE CENTER

Paul Chan — 14 Oct 1994

Dr. Paul Chan, Head — *Date*

NASA, SEAWIFS PROJECT OFFICE

Gene Feldman — 14 October 1994

Dr. Gene Feldman, Data Systems Manager — *Date*

NOAA Satellite Ocean Remote Sensing

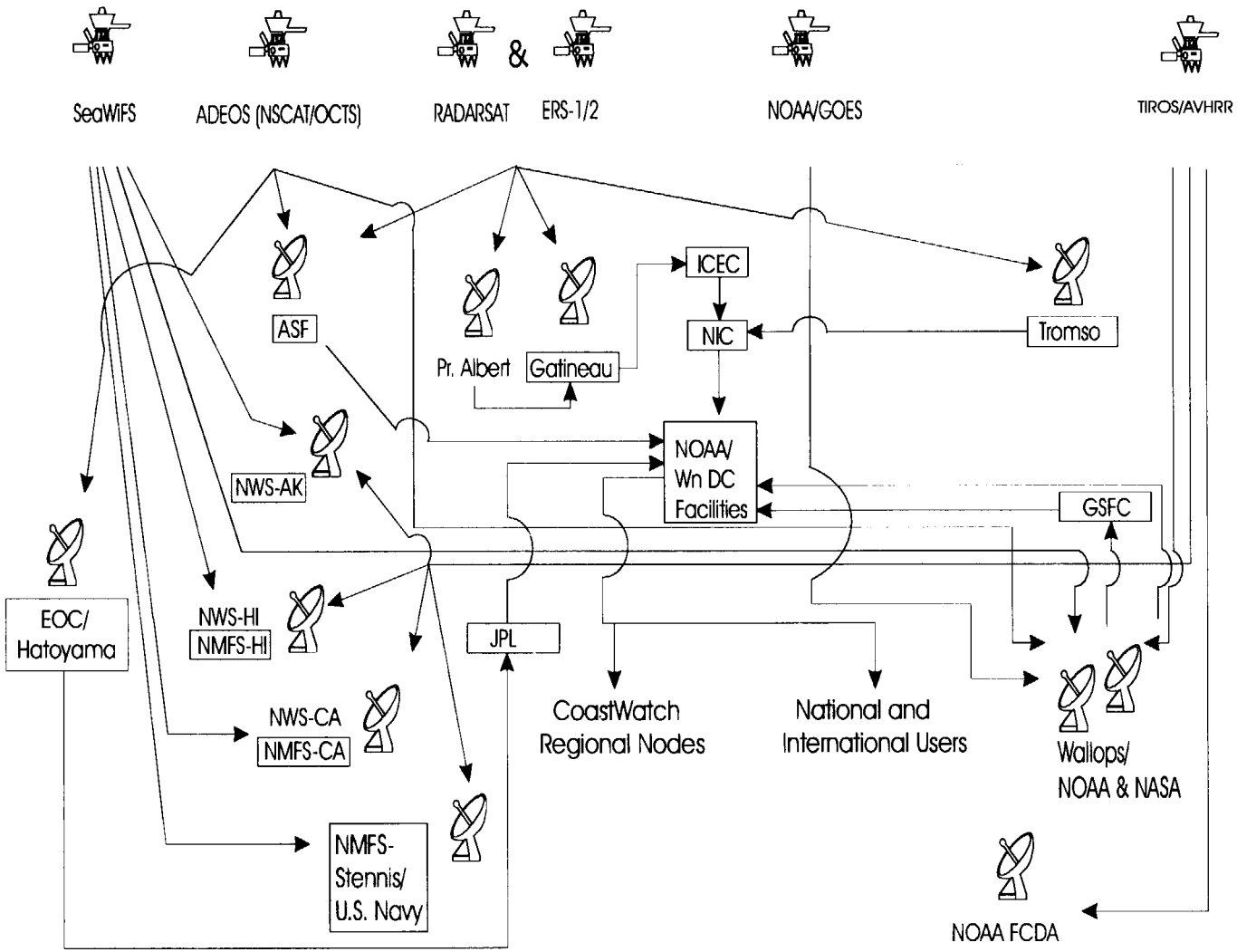

Kent H. Hughes
February 21, 1995
nsors/gndarch1

Group 1

Recommendations on Intercalibration of Ocean Color Sensors

Comment: recommendations build on the framework developed under the joint SeaWiFS - MODIS calibration and validation program.

1. Form a U.S. ocean color intercalibration executive committee to oversee this program.

2. Continue development of calibration measurement protocols (laboratory and field) including those of IOP's.

Laboratory Calibration

3. Expand the scope of the Calibration Round-robin
   a. continue the present calibration source round-robin to be hosted at NIST, i.e. one every 1 - 2 years.

   b. initiate calibration training workshops at NIST

   c. incorporate solar based plaque calibration

   d. incorporate in situ instrument calibration comparisons

   e. develop scheme for SXR rotation to color community calibration facilities.

4. If NIST stability monitor design proves viable, obtain multiple copies for loan to community.

5. Provide resources for community instrument calibration support.

6. Develop a pre-launch sensor characterization standard which describes the key parameters and tests that should be performed and documented.

Post-launch On-board Calibration and Stability

7. Develop a cumulative description of the solar calibration, internal lamp calibration, calibration pulse, dark current, and sensor engineering data collection schemes for the present suite of ocean color sensors.

8. Endorse the EOS support of Hugh Kiefer lunar measurement program.

9. Obtain, if possible, witness filter samples for all U.S. ocean color instruments and maintain samples in a vacuum environment.

10. Support efforts, e.g. field studies, to evaluate and correct sensor anomalies such as stray light and bright target recovery.

Vicarious Calibration

11. Support additional calibration moorings
    a. one at mid to high latitudes in the Southern Ocean, e.g. east or west of Australia.

    b. one near the Canary Islands

    c. one at high northern latitudes (how this might be accomplished was unclear)

12. Support vicarious calibration programs at both high latitudes and high altitudes. Note: could not define a suitable vicarious calibration approach at high latitudes in northern hemisphere.

13. Support atmospheric optical measurments near calibration mooring sites (sun photometry is a minimum).

14. Support a program for advanced measurement techniques for sensor calibration, e.g. towed arrays and drifters.

15. Support U.S. initialization cruises for every ocean color mission launch (U.S. and foreign).

16. Support an effort for implementing a common atmospheric correction scheme for a suite of suitable ocean color sensors.

17. International agreements
    a. exchange of high resolution level 0 and engineering data at calibration sites and over regions of concurrent swath overlap.

    b. explore feasibility of MERIS channel reconfiguration in situations where concurrent observations occur.

c. exchange of in situ data from calibration moorings and platforms, initialization and calibration cruises, and prelaunch calibration and characterization data.

18. Support development of conceptual and theoretical formalisms for evaluating and comparing on-board and vicarious calibration information and associated uncertainty budgets.

Data Processing and Archival

19. Support an ocean color calibration data archive for pre- and post-launch satellite calibration, characterization and sensor engineering data, match-up data and calibration round-robin data.

GROUP 2 VALIDATION

Validation is the process of defining the spatial and temporal error fields and regional limits for a given geophysical product throughout the mission. Extends algorithm validation. Comparison of satellite derived values with real in-situ values is the basis for determining the accuracy of a data product in extended ranges.

Error fields can also be interpreted in terms of the spatial and temporal statistics of the geophysical variables, of interest.

The error forms the basis of performance comparisons, algorithm comparison/improvement, and is necessary for assimilation of satellite data into coupled models.

Given the range of geographic and temporal variations, large numbers of comparison data are required to establish the error fields.

Every mission has very basic, minimal validation program, but none are global. Some are tuned to regions and sensor of interest.

Benefits of International approach, and sharing of validation data (in-situ/ancillary) immediately increase by 10x the spatial and temporal coverage of error field determination, and to enable cross-comparison of data products.

Int'ln provides a mechanism for increased participation and sharing of responsibilities by non-mission programs, and can be useful in obtaining observations in remote, critical areas in a cost effective manner.

Sharing of ancillary and in-situ validation data is a zero order requirement, and validation data should be explicitly included in every satellite data exchange agreement.

Further research is also needed in methodology for determining the impacts of spatial and temporal autocorrelation functions, error propagation, and small scale (intrapixel) variability.

Mission plans, buoy maps

Identify key regions, areas which may have inadequate in-situ validation activities. Prioritize ship, a/c, buoy to augment planned activities

Focused field expeditions provide interrupted time series of important variables. Global inventory cruises can provide unique data in very poorly sampled regions. Implementation plan must await international coordination, but several areas of concern are clearly identified.

- Extreme optical environments
- High latitude bio-optical mooring (LTER site begun at Palmer, NP. analog to NA site is missing)
- Increased sampling of the Southern Ocean (JGOFS connection)
- Tropical Atlantic - NW Africa for dust (YBOM covers yellow dust)
- Major river plumes
- Wallops recommended for aerosol od

To what extent can data collected for validation of sensor A product be used to validate products from sensor B: - there is very good coherence in data products between missions. Some differences are very complementary (eg POLDER). Radiance/reflectance not a big issue

Validation data collection should emphasize
nLw, Chl a, aerosol od. k, ss, productivity, coccoliths, suspended sed, fluorescence

- Should make allowance for research products (absorbance)
- Multiple parameters are nice, but not essential

Accuracy of validation products is important - need qc function - but levels of accuracy can vary according to use. (Chl along track at ±30% is useful in some regions which have a ±100% bias)

nLw validation has uses other than for vicarious cal, especially spectrally normalized validation data in coastal zones.

Atmospheric correction (error fields of epsilon or Angstrom coefficient

Primary metric is nLw,

Spectral Photometer network of POLDER, CIMEL should be augmented.
B. Holben/NASA sites/D. Tanre/Niigata/ Okinawa

Need high latitude, dusty, and coastal sites.

East, West Coast US have predominately continental/marine aerosols and a pair of stations would encompass a large range of variability

Sun Phots provide some, but not all info necessary for validation

Sensors on buoys are not widely available, need to increase island stations

Ongoing? sites
YBOM, Niigata station
    Gobi dust
European activities in Med - Saharan northern flow
MOBY,
HOTS & BATS
Resolute/Ellesmere Island
North Sea (MAST III/Picasso)
Palmer, LTER site
Monterey (MBARI)
NOAA FOCI program in Bering - lacks radiometers on mooring
    but has AC-9 and fluorometer
Low latitude - strong look at instrumenting some TOGA moorings
ARM site
Instrumented platforms (Adriatic, also Black Sea)
Evaluation plan for Ambrose, GofMexico tower

Need High Latitude productivity time series

Global Geophysical Algorithm and Product Validation

Issue 2.3. International protocols:

Why:
- -Need for data consistency
- -Standardized and simplified collection methods
- -International community participation will:
  - augment scope of validation network and
  - augment utility of diverse color satellite data

Goal:
- -Define a basic set of validation parameters and methods
  - Include: Lu, Lw, Ed, chlorophyll, DOC, absorption
- -Define candidate variables for automated measurement:
  - -Attended vs unattended sampling platforms
  - -Address biofouling
- -Guidance on algorithm adjustment for baseline products

Recommendations:
- - Establish working group within international forum
- -Methods for standard products already exist:
  - need to compile and disseminate
- -Define protocols tailored for area of interest:
  - coastal vs. global ocean
- -Need to define protocols for Primary Productivity:
  - protocols do not exist
  - (protocol requirement established previously by NASA productivity working group)

Global Geophysical Algorithm and Product Validation

Issue 2.4. International validation database

Why:
- Augment validation data base severalfold for each international partner
- Validation effort becomes global in scope

Background:
- Each international partner has existing plans which need to be coordinated
- Current databases have limited access and life

Recommendation:
- Complete open access to data
- Simple construct (e.g. WWW / ftp - gopher site)
- Establish international agreement to: including validation data in satellite data exchange agreements and MOU's.

Global Geophysical Algorithm and Product Validation

Issue 2.5. Global automated observation network:

Background:

- -System like NOAA/WMO SST buoy network or Dobson/UV monitoring network does not exist for ocean biogeochemistry
- -Several buoy/mooring systems for meteorology or physical oceanography are in place (e.g. TOGA/TAO, NDBC met. Towers and buoys, international navigation/met. Buoys and towers)

Why:

- -Near real-time validation database
- -Fine tune products with global database

Requirements:

- -Technology does not exist, needs development:
  - -biofouling
  - -attended vs unattended

Recommendation:

- -move slow at this stage but begin engineering studies
- -assess type of platform needed
- -assess number of platforms required
- -begin with small set of platforms
- -coordinate with international partners

Global Geophysical Algorithm and Product Validation

Issue 2.6. Ship of opportunity / automated measuring systems

Background:

- -Large number of commercial vessels
  - Shipping lanes repeatedly covered
  - Fisheries grounds covered
- -Operational assets (NOAA, NAVY) increasingly available for dual-use

Why:

- -Research vessels cannot cover globe repeatedly
- -Technology is available
- -Time series possible

Recommendation:

- -Conduct feasibility study on selected shipping lanes
- -Refine technology and protocols to ensure data quality
- -Establish international framework to ease sampling restrictions in foreign waters

Working Group 3: Data Merging and Long-Time Series

Thursday, February 23, 1994

It is well recognized that oceanic primary production plays a major role in the global carbon cycle, accounting for approximately 50% of global photosynthetic carbon fixation, and yet there is no reason to predict that increases in atmospheric carbon dioxide will have a direct impact on oceanic primary production (since carbon doesn't limit production). Thus, most global climate models do not include biological forcings, but rather consider them to be in steady state. However, we have no observational data on the scales needed to test, confirm or refute that belief.

Small changes in primary production could produce a major perturbation in carbon cycling, and certainly the phytoplankton are quick to respond to environmental forcings. Historically, our first awareness of El Ninos was the result of its biological impact on the fisheries in the western tropical Pacific.

The goal is to determine the response of the ocean biota to climate change, by identifying feedbacks that exist between changes in ocean wind forcings, circulation, radiative heat fluxes, cloud cover, and the ocean biology. Responses may be direct or indirect. The most direct effect is likely to occur in coastal and continental shelf areas, where human impacts are being felt today and will become more critical in the coming decades as a result of human population growth and its concentration in coastal areas. Ocean color data will be a tool for fisheries managers, coastal geologists and hydrologists, and for state and local agencies that monitor water quality.

The only method for monitoring oceanic (or terrestrial) primary production is from space. Our long-range goal is to produce a set of continuous time series of bio-optical and geophysical variables derived from Ocean Color satellite data. This will establish the data base necessary to monitor for changes in coastal and open ocean biological production that might occur as a direct or indirect result of climate change and human population growth.

The time series will begin in 1996 with SeaWiFS and OCTS data, and subsequently incorporate data from the MERIS, MODIS and GLI sensors. All of these sensors draw from the common heritage of the Coastal Zone Color Scanner, and thus, there is a basis for merging data. Because of their high degree of compatibility, data from SeaWiFS and OCTS will be the easiest to merge. Changes in spatial and spectral resolution will make the task more challenging as the later sensors come on line.

It is unclear whether data from other sensors (POLDER, MOS Priroda, URS-P3, and others) will be merged because these sensors employ techniques or have other differences that may render them incompatible. We propose to create a data set (see below) that will allow us to determine whether the data from these sensors can be merged.

What "products" will be merged?

The purpose of the time series is to monitor for environmental change. Thus, the variables chosen include (to begin with): a CZCS-like pigment concentration (derived from CZCS bands) that will enable us to begin the time series in 1978 with CZCS data, chlorophyll-a, diffuse attenuation coefficient, and aerosol optical depths. Other variables (e.g., primary

productivity, coccolithophore concentration, etc.) will be added as these become operational products at a later date.

We do not recommend the production of time series for variables (e.g., water leaving radiances, epsilons, etc.) solely for the purpose of interpreting the higher-level derived variables. These data sets will exist within the project.

However, we anticipate the need to make adjustments or corrections to make data sets compatible. No doubt, data from the earlier satellites (SeaWiFS and OCTS) will have to be "corrected" to make them compatible with later sensors. To this end, we recommend the creation of a Test Data Set (or Diagnostic Data Set) that will contain the information necessary to figure out how to accomplish the adjustments. This information (calibration constants, sensor gains, raw digital counts, algorithm parameters, etc.) is readily available and accessible during the initial processing of the data, but is highly inaccessible after the data are processed. Thus, we recommend that **at the time that the initial data are processed** a Diagnostic Data Set be created by each sensor project.

The Diagnostic Data Set will contain data and ancillary information for individual pixels located at a fixed spatial grid. The grid-point spacing will be relatively large in open ocean areas but will get finer near shore. The total number of grid points will be on the order of 1 million points globally. Thus, the diagnostic data volume will be manageable, not overly burdensome, but extremely valuable in later years as we work out the details of how to merge the data from multiple sensors over a 15 year time period.

Working Group # 4 on Data and Data System Requirements for Multisensor Data

Gene Feldman and Ed Masuoka

Issue 1. For specific uses and merged products defined in other Working Groups, define required data sets by source, processing level, spatial and temporal needs and volumes. In addition to satellite-derived data, include ship and in situ data observations.

Issue 2. What needs to be done to provide access to or obtain the above mentioned data products, in addition to the current mission plans and national plans for data access and distribution.

Issue 3. What are the proper roles of centralized, distributed, national, sensor team, and investigator level efforts in obtaining, processing, and distributing the above data.

Issue 4. What software from various missions will be available, and what is required to port it to other systems.

Issue 5. Size data system hardware, software, and operations efforts and costs for candidate scenarios and function's (as stand-alone and integrated with existing or planned systems).

Issue 6. Identify the best organizations within the EOSDIS framework to accomplish this activity. What functionality is required, and where is it found currently.

Group Thoughts

1. Establish a Home Page for the Ocean Color community (what community?)

2. For every involved Ocean Color Project there should be something like a MOSAIC based browser for distributed data servers running SEABASS or a similar system in which the project rapidly puts its in-situ data for public access.

3. Put together an actual data set package from a field program (perhaps Southern Ocean JGOFS October 96-April 97, again October 97-April 98) which includes current ship data, buoys/moorings and perhaps other data. Suggest the addition of other data (e.g. instrument cross calibration, scatterometer, ?) which would augment the current plan. Generate the metadata for each of the data sets.

4. Establish a group/program/investigator or whatever to develop an ongoing effort which would evolve from the preceding prototype into an ongoing operational effort to support the collection, formatting, cataloging and distribution of Ocean Color in-situ and/or field support data. This may be done

by providing links to a highly distributed system or by coalescing the data into a DAAC or some other way

5. Recommend that for all the spacecraft Ocean Color missions that will be in operation during JGOFS there is a data collection and distribution system which will provide access to full/ high resolution coincident satellite data in near real time for distribution to a wide audience (or to the JGOFS folks)

6. There should be an effort (under the oversight of another of the groups here-probably Chuck's) to identify a consistent set of meta-data which should be provided as a minimum for all in-situ data sets.

6. We assume that there will be a recommendation (probably from group 3) for the adoption of a standard grid, probably the ISCCP 1 km and nested up grid.

7. Assert that the needed system is highly variable and not currently well defined as a stable operation. As such it is probably not well suited for implementation in a production oriented DAAC at this time.

8. Note that we appear to be recommending an operational long term ongoing task. Where does this get funded from, why is it just a NASA effort

9. Is there any specific set of tasks for collecting, processing and distributing MODIS validation data?

Assignments/Voluteers
Gene Feldman
Gerald Moore (in-situ data integration)
Ed Masuoka (for volume estimates (Issue 5)
Al Fleig (quibling)
Mark Abbott (Call Bob Anderson about JGOFS and clarify the objectives of this effort)

****Group 5 Summary Report: National and International Collaboration for Higher Quality, Long-Term, Global Ocean Color Products** (Given by Robert Frouin)**

•Why? Data needed for:

- Interannual phenomena description (El Nino)
- Global change model validation
- Carbon cycle quantification (ocean uptake, carbon sequestering)
- Spatial upscaling
- Coastal change monitoring

•Opportunity

- At least 6 sensors (SeaWiFS, MODIS, OCTS, POLDER, MERIS, & GLI) are going to be in space: 3 next year, 5 in 1998-1999
- => great opportunity to start building a long-term, consistent database of credible scientific quality

•What do we need to get there?
(1) Develop composite cal/val dataset
(2) Pool metadata on sensor characteristics
(3) Compare and assess algorithms for product extraction
(4) [After launch] Arrange for Level 1 data exchange
(5) Evaluate final product and distribute

•How to do it?

Science Working Group on Ocean Color (e.g., extended JUWOC) to make recommendations, planning -->

Space Agencies/Government bodies &/or CEOS to arrange for data policies, multilateral agreements, Memoranda of Understanding, implementation

The United States should establish an interagency working group on Ocean Color to facilitate coordination of programs, funding, etc.

•Demonstration Projects
(1) Ross Sea '96 - '98 (JGOFS Southern Ocean Experiment) - 1 km
- International
- OCTS, POLDER, SeaWiFS (& scatterometers, altimeters, etc.), PCO2 measurements

(2) Coastal, Global 1-km dataset
- LOICZ context
- CENR emphasis

- Navy could invest resources for cal/val activities
- NOAA (fisheries, coastal management)
- USGS