SRCA STRUCTURAL LAYOUT

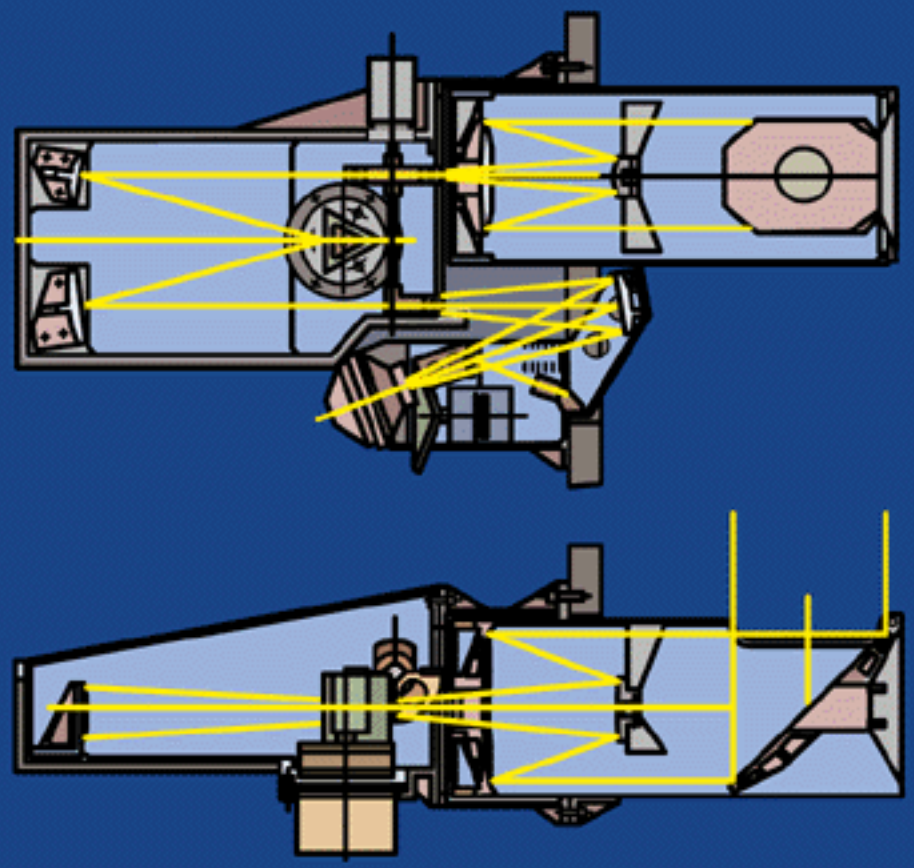

L137.02S