# NASA AIRCRAFT-SATELLITE INSTRUMENT CALIBRATION PROJECT • • •

PRINCIPAL INVESTIGATOR:

PETER ABEL
NASA/GSFC

FAX: (301) 286-9200
OFFICE: (301) 286-6829

OBJECTIVE:

To calibrate *visnir* satellite sensors with high absolute accuracy and short response and data turnaround time.

IMPLEMENTATION:

- Record several radiance spectra of a suitable target with a well calibrated spectrometer on an aircraft.
- Fly above 90% of the atmospheric mass using an ER-2 aircraft flying at 19 km to minimize atmospheric path correction.
- Underfly the satellite, which observes the target with congruent geometry.
- Convolute each spectrum with satellite spectral response function, and correct to satellite altitude with LOWTRAN-7.
- Fine-tune navigation with spatial correlations between satellite counts and equivalent radiances.
- Compare satellite counts integrated across the spectrometer's footprint with radiance at satellite altitude to derive gain.

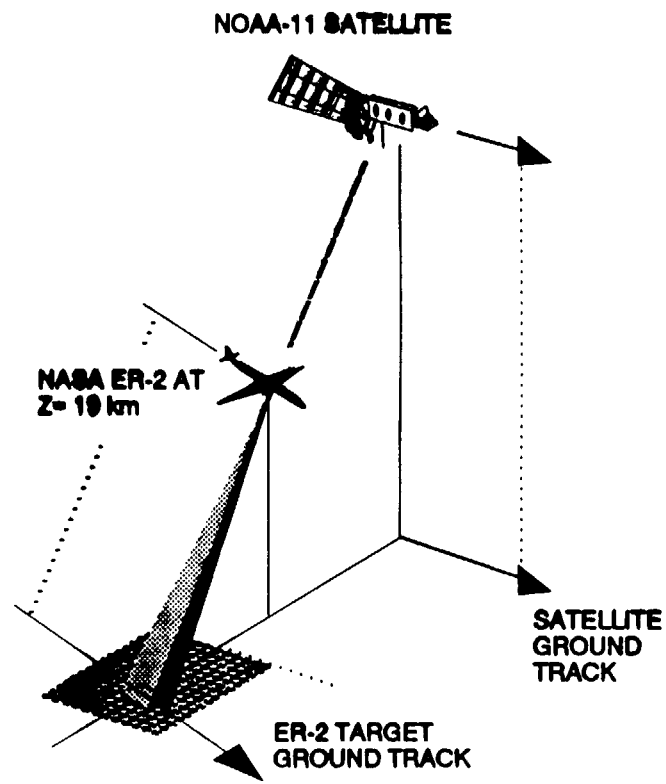

# 1/8 Meter Zero Dispersion Ebert Double Monochromator

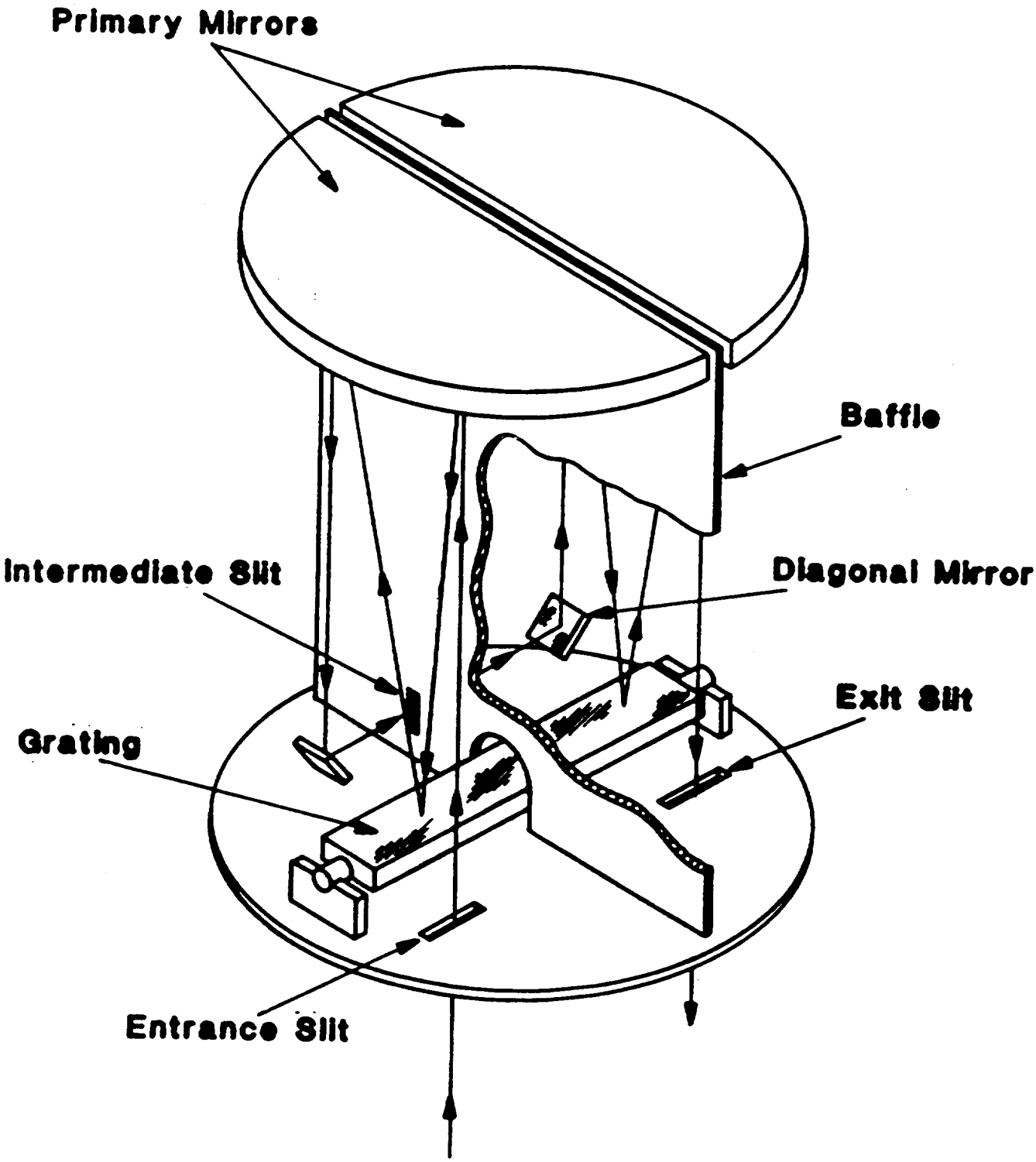

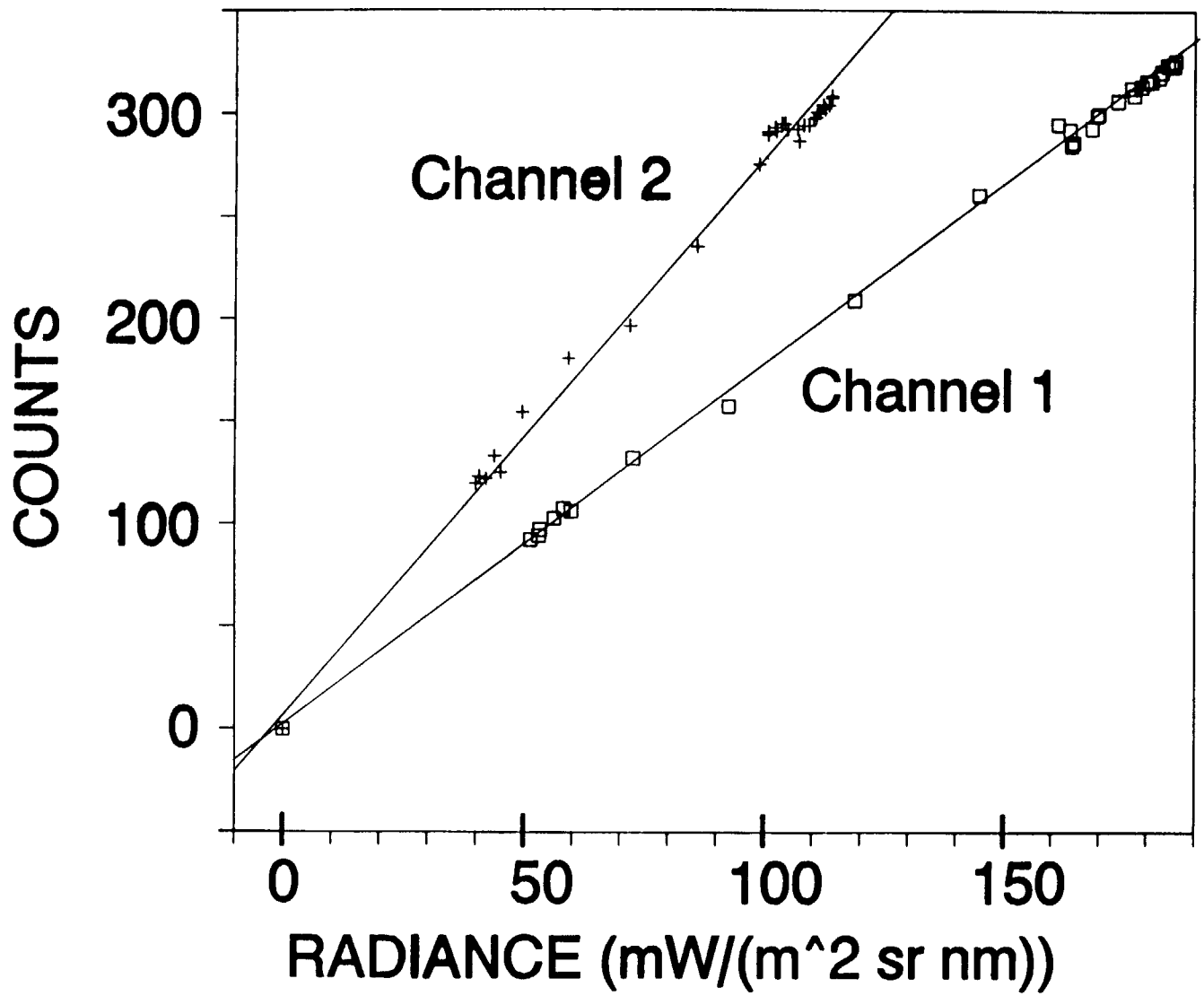
Channel 2
Channel 1
COUNTS
300
200
100
0
0
50
100
150
RADIANCE (mW/(m^2 sr nm))

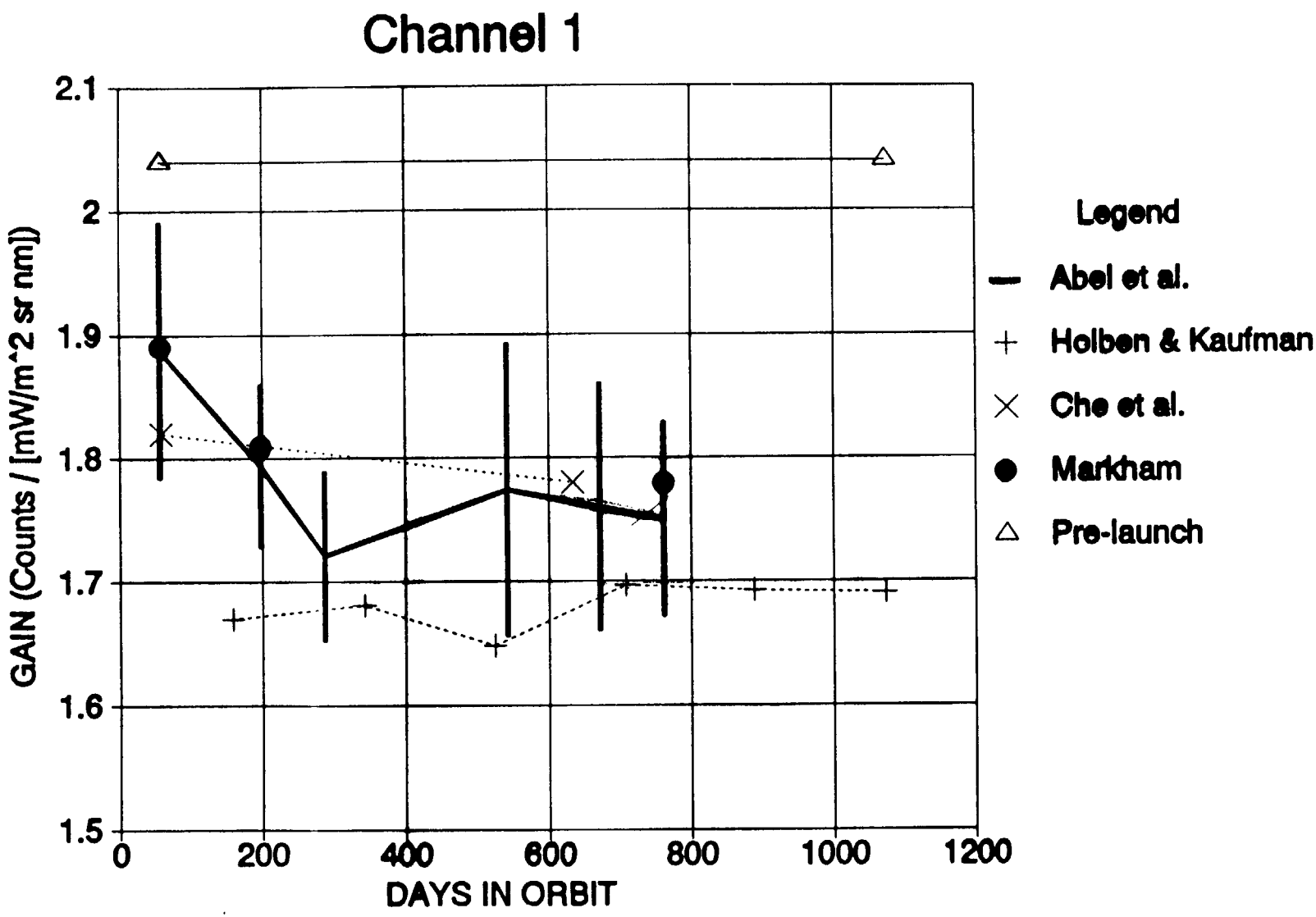
Channel 1
GAIN (Counts / [mW/m^2 sr nm])
2.1
2
1.9
1.8
1.7
1.6
1.5
0
200
400
600
800
1000
1200
DAYS IN ORBIT
Legend
Abel et al.
Holben & Kaufman
Che et al.
Markham
Pre-launch

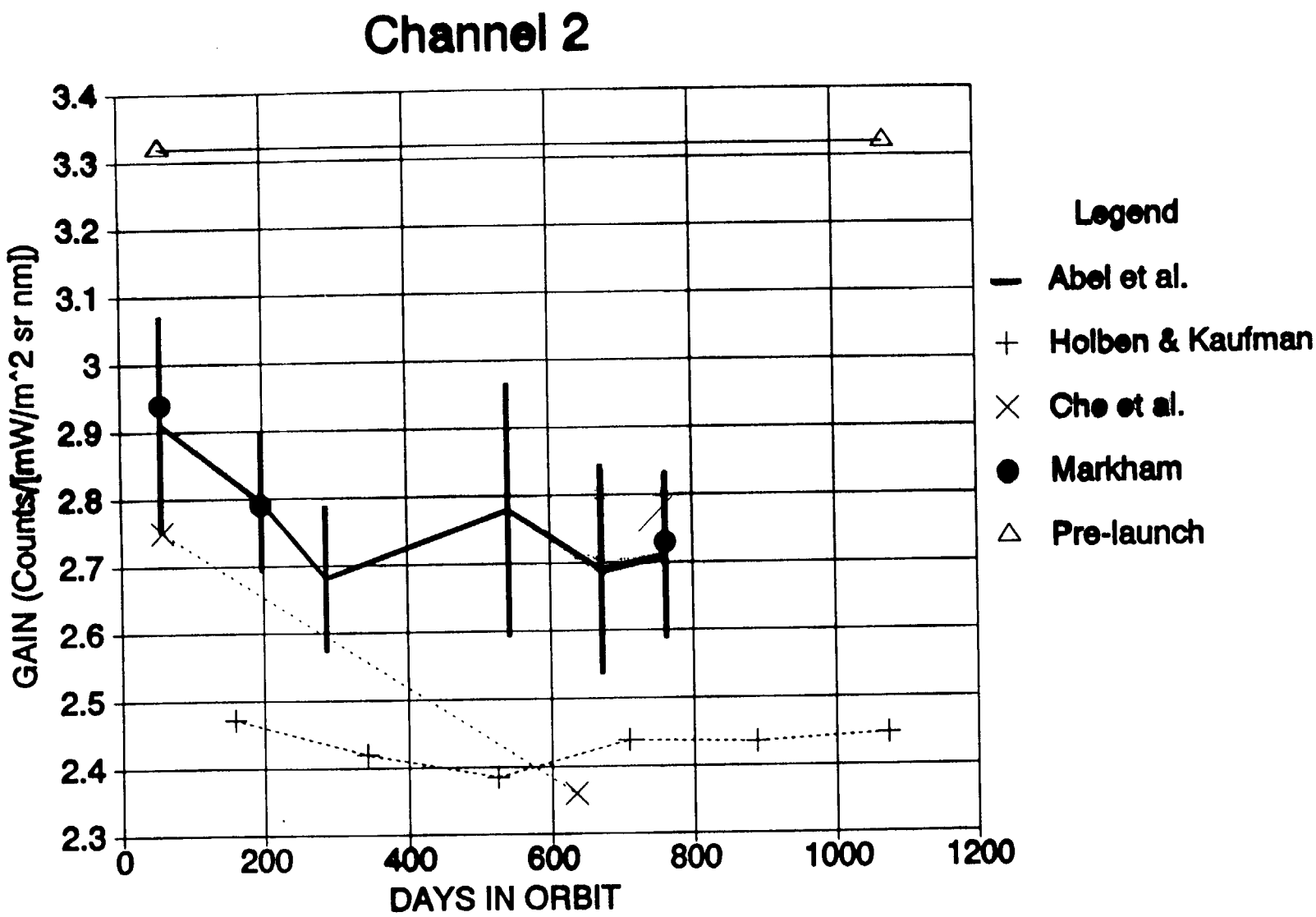
Channel 2
GAIN (Counts/[mW/m^2 sr nm])
3.4
3.3
3.2
3.1
3
2.9
2.8
2.7
2.6
2.5
2.4
2.3
0
200
400
600
800
1000
1200
DAYS IN ORBIT
Legend
Abel et al.
Holben & Kaufman
Che et al.
Markham
Pre-launch

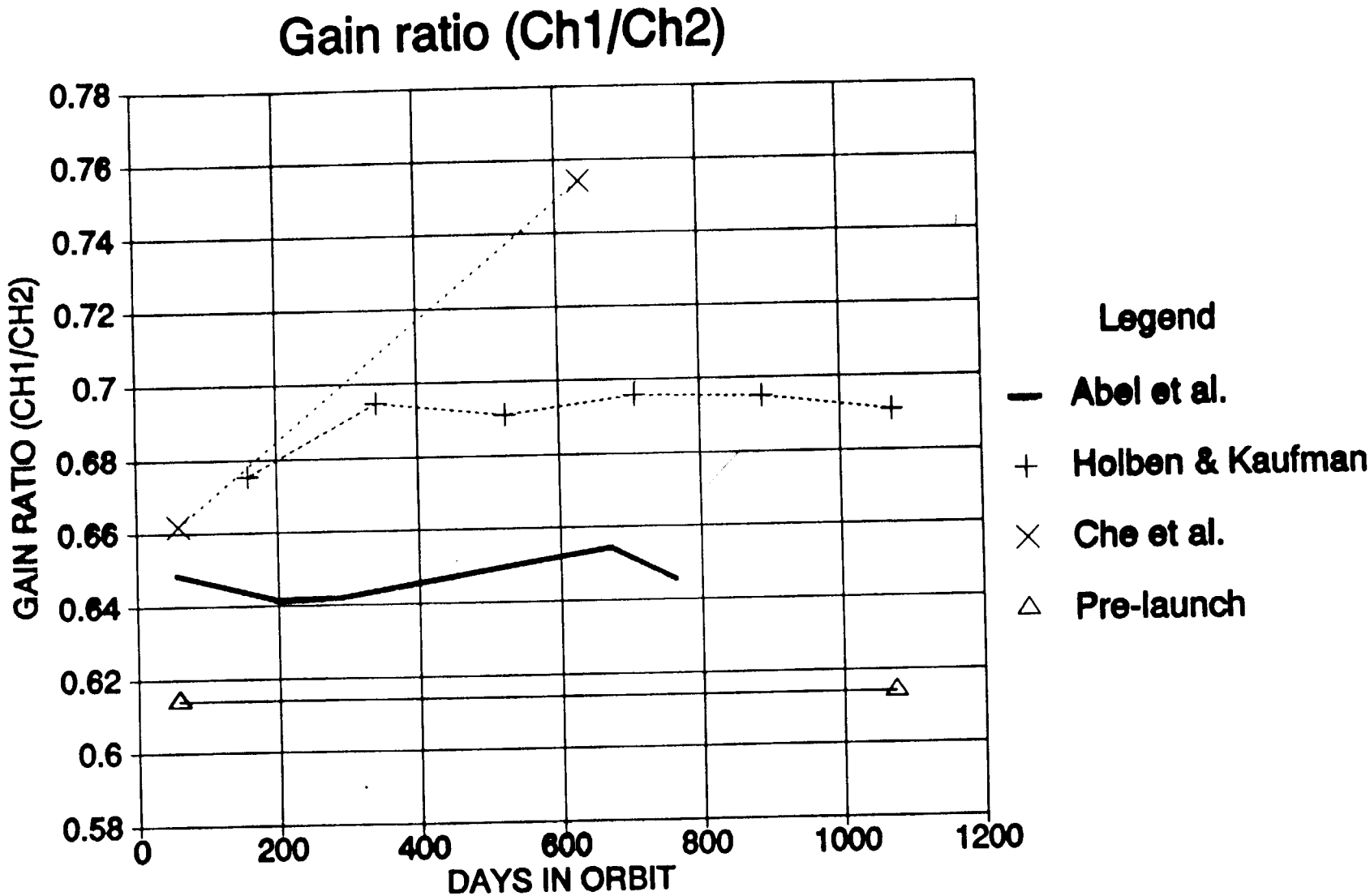
Gain ratio (Ch1/Ch2)
GAIN RATIO (CH1/CH2)
0.78
0.76
0.74
0.72
0.7
0.68
0.66
0.64
0.62
0.6
0.58
0
200
400
600
800
1000
1200
DAYS IN ORBIT
Legend
Abel et al.
Holben & Kaufman
Che et al.
Pre-launch

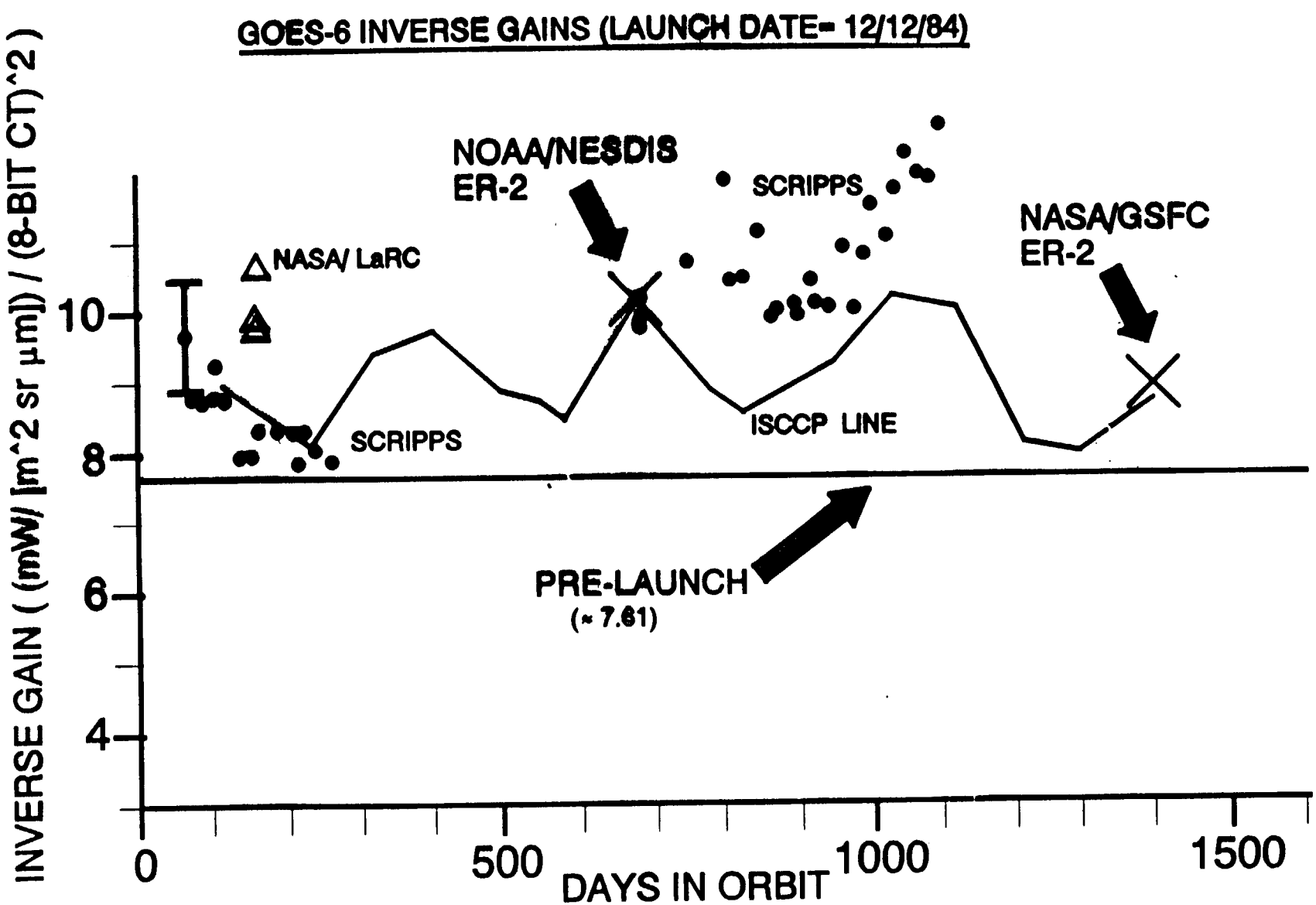
GOES-6 INVERSE GAINS (LAUNCH DATE= 12/12/84)
INVERSE GAIN ( (mW/ [m^2 sr µm]) / (8-BIT CT)^2 )
10
8
6
4
0
500
1000
1500
DAYS IN ORBIT
NASA/ LaRC
SCRIPPS
NOAA/NESDIS
ER-2
SCRIPPS
NASA/GSFC
ER-2
ISCCP LINE
PRE-LAUNCH
(≈ 7.61)

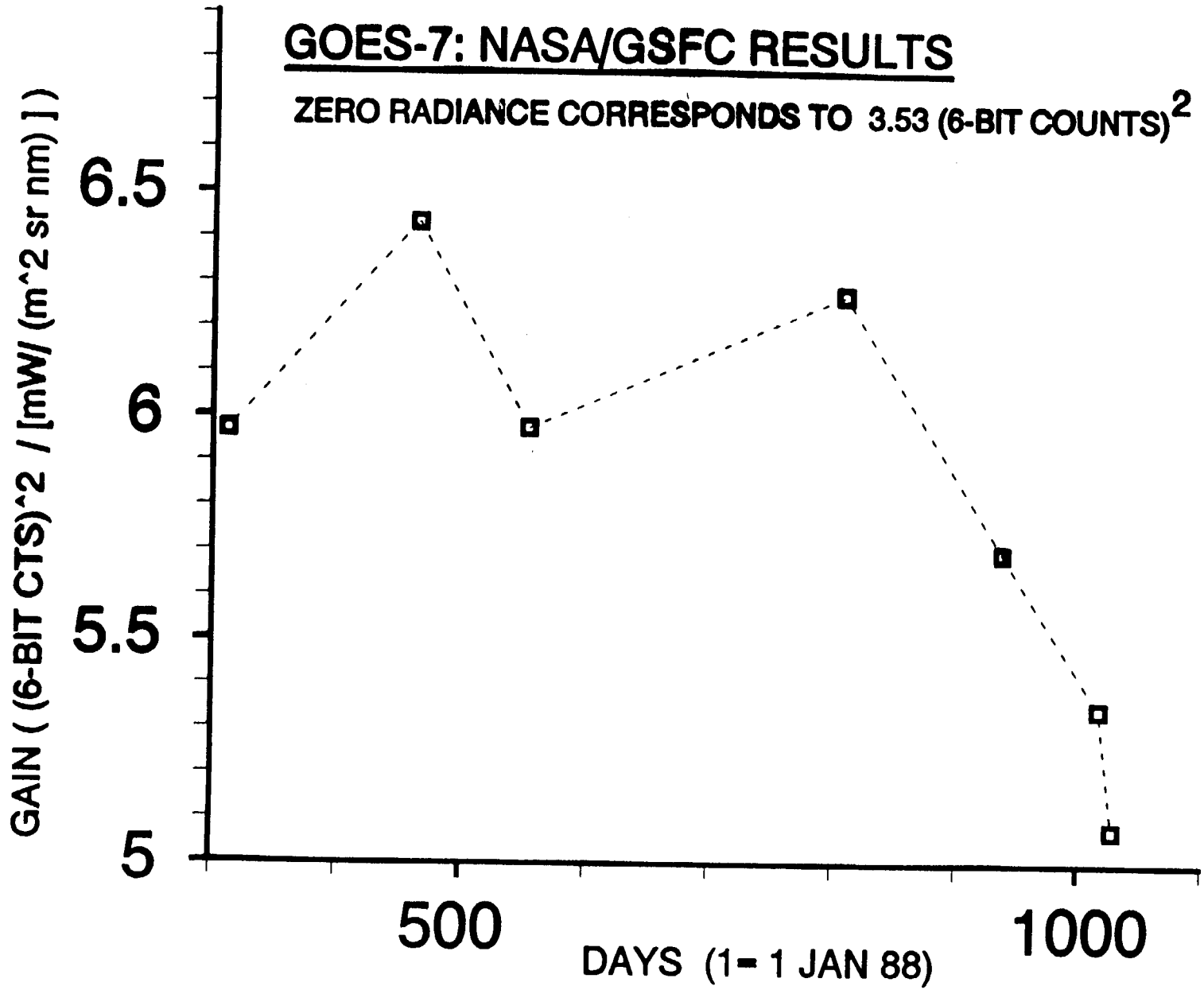
GOES-7: NASA/GSFC RESULTS
ZERO RADIANCE CORRESPONDS TO 3.53 (6-BIT COUNTS)2
GAIN ( (6-BIT CTS)^2 / [mW/ (m^2 sr nm) ] )
6.5
6
5.5
5
500
1000
DAYS (1= 1 JAN 88)

| SOURCE OF UNCERTAINTY | % UNCERTAINTY IN GAIN [% GOAL] |
|---|---|
| LAB. CAL. PRECISION | 0.3 [0.2] |
| LAB. CAL. ACCURACY (A) | 2.0 [0.5] |
| SCENE REGISTRATION (D) | 3.0 [0.5] |
| ATMOS. CORRECTION | 0.5 [0.2] |
| RESIDUAL POLARIZATION | 2.0 [0.2] |
| WINDOW TRANSMITTANCE (B) | 0.5 [0.2] |
| OBSERVATION GEOMETRY (C) | 1.0 [0.5] |
| WAVELENGTH CAL. | 0.2 [0.1] |
| RSS TOTAL (ACCURACY) | 4.3 [1.0] |
| RSS TOTAL (PRECISION) | 3.6 [0.8] |

(A) 4% for flight #4 (March 1990)

(B) For the last 2 flights. 1% elsewhere.

(C) Includes angular alignment uncertainty on the aircraft, field-of-view effects, and change in solar zenith angle.

(D) Varies according to the position of the flight target track, and observation geometry. Fo the 6 flights, estimates are ±4.4, 1.8, 2.3, 4.7, 4.6, and 3.0%.

# IMPROVEMENTS IN PROGRESS

- OPTIMIZE GROUND TRACK SELECTION;
- OPTIMIZE SPECTRAL SCAN SEQUENCES;
- FULLY CHARACTERIZE THE FIELD-OF-VIEW;
- BAFFLE OUT-OF-FIELD RESPONSE;
- REAL-TIME QUALITY CHECKS ON LABORATORY DATA;
- INCLUDE THE WINDOW IN ALL LABORATORY RADIANCE CALIBRATIONS;
- INTRODUCE NIST STANDARD DETECTORS INTO THE LABORATORY CALIBRATION PROCESS;
- REDUCTION OF INSTRUMENT TEMPERATURE EFFECTS;
- IMPROVE POINTING ACCURACY;
- IMPROVE NAVIGATIONAL ACCURACY;
- IMPROVE STABILITY & RELIABILITY OF ELECTRONICS & MOTOR DRIVES.

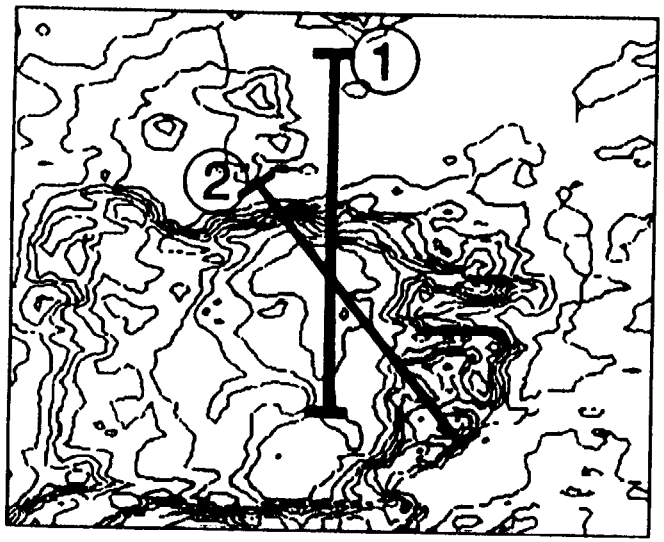


(A) AVHRR CHANNEL 1 COUNT CONTOURS, SHOWN WITH (1) THE PRESENT GROUND OBSERVATION TRACK, AND (2) A PROPOSED FUTURE GROUND TRACK.

(B) CORRELATION COEFFICIENT CONTOURS (INTERVAL IS 0.01) FOR TRACK 1 SPATIAL DISPLACEMENTS OF ± 5 km

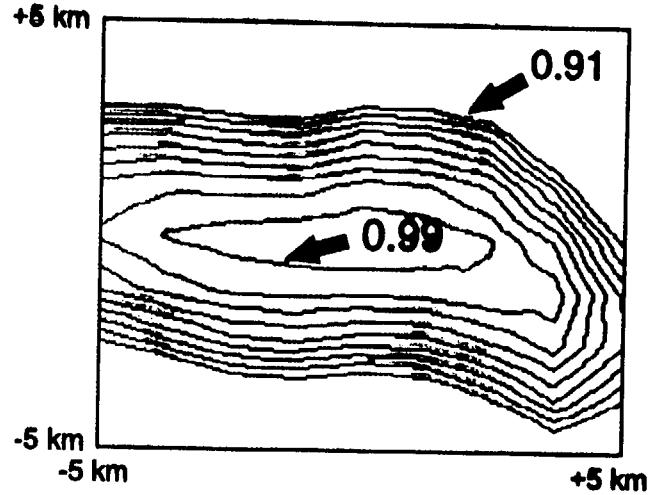


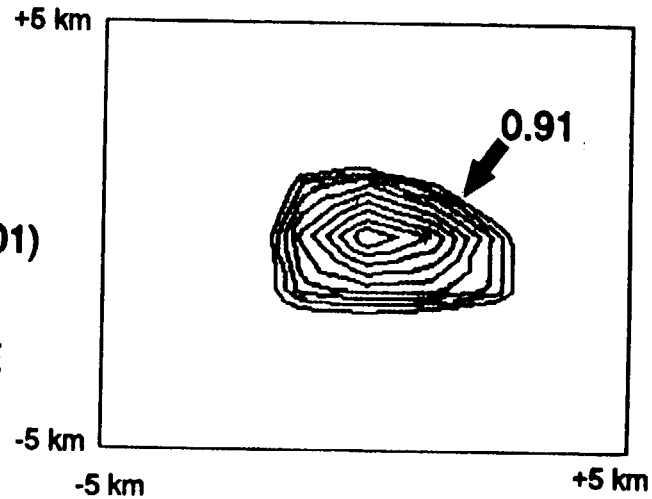


(C) CORRELATION COEFFICIENT CONTOURS (INTERVAL IS 0.01) FOR TRACK 2 SPATIAL DISPLACEMENTS OF ± 5 km, SHOWN ON THE SAME SCALE AS (B)
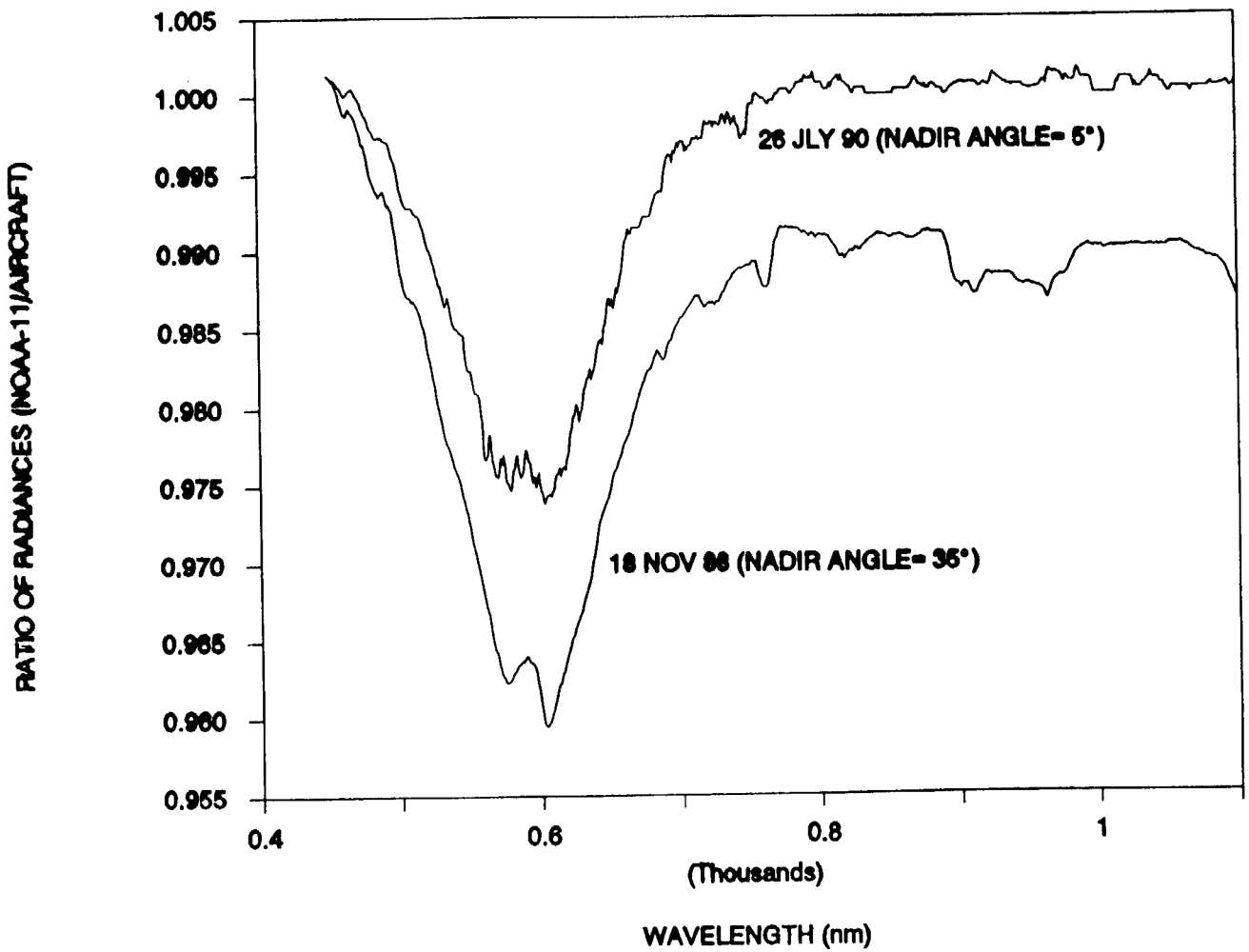
# LOWTRAN-7 RESULTS