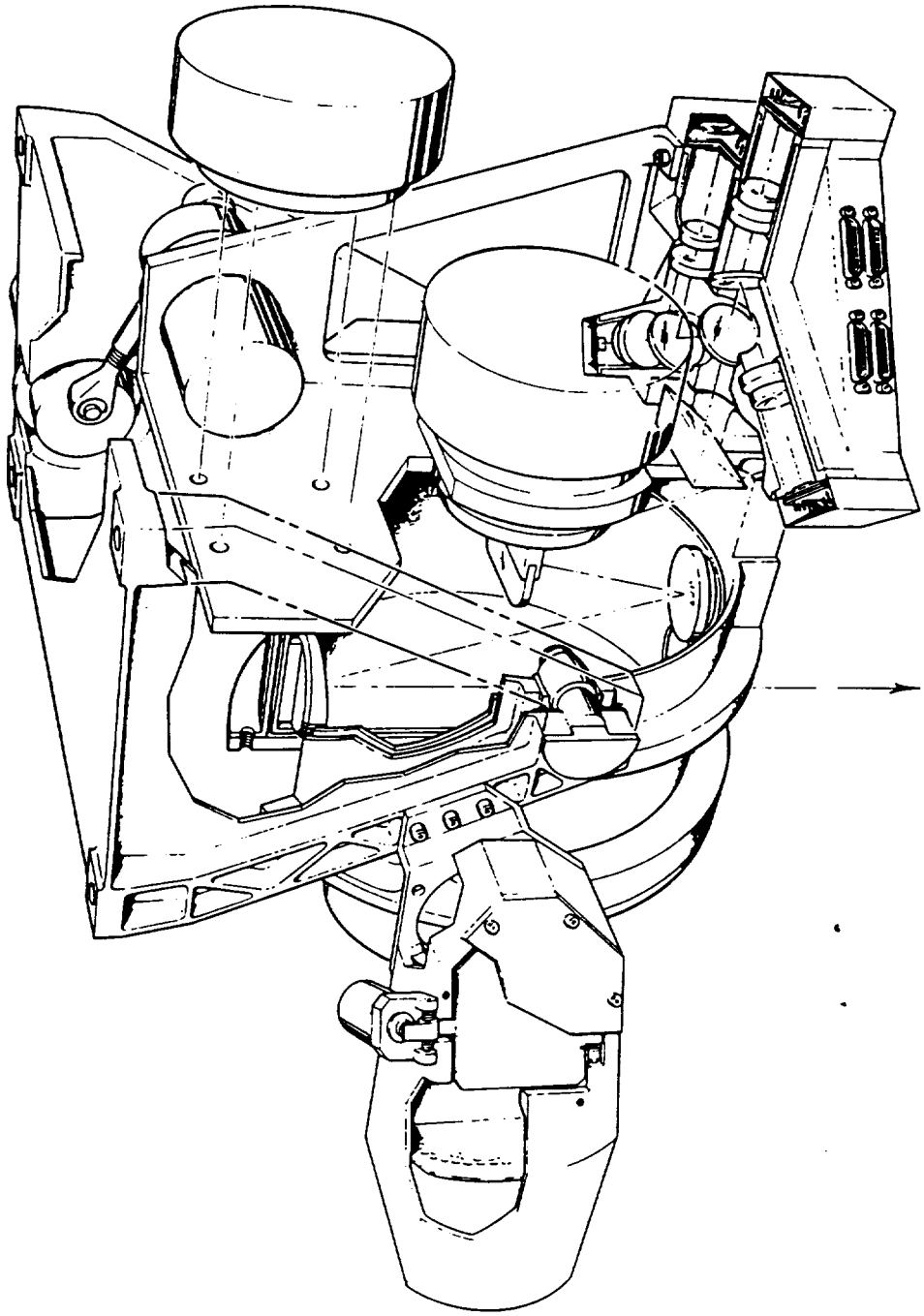

Attachment 3.8

SeaWiFS
SEA-VIEWING, WIDE FIELD-OF-VIEW SENSOR

HUGHES

SANTA BARBARA RESEARCH CENTER
a subsidiary

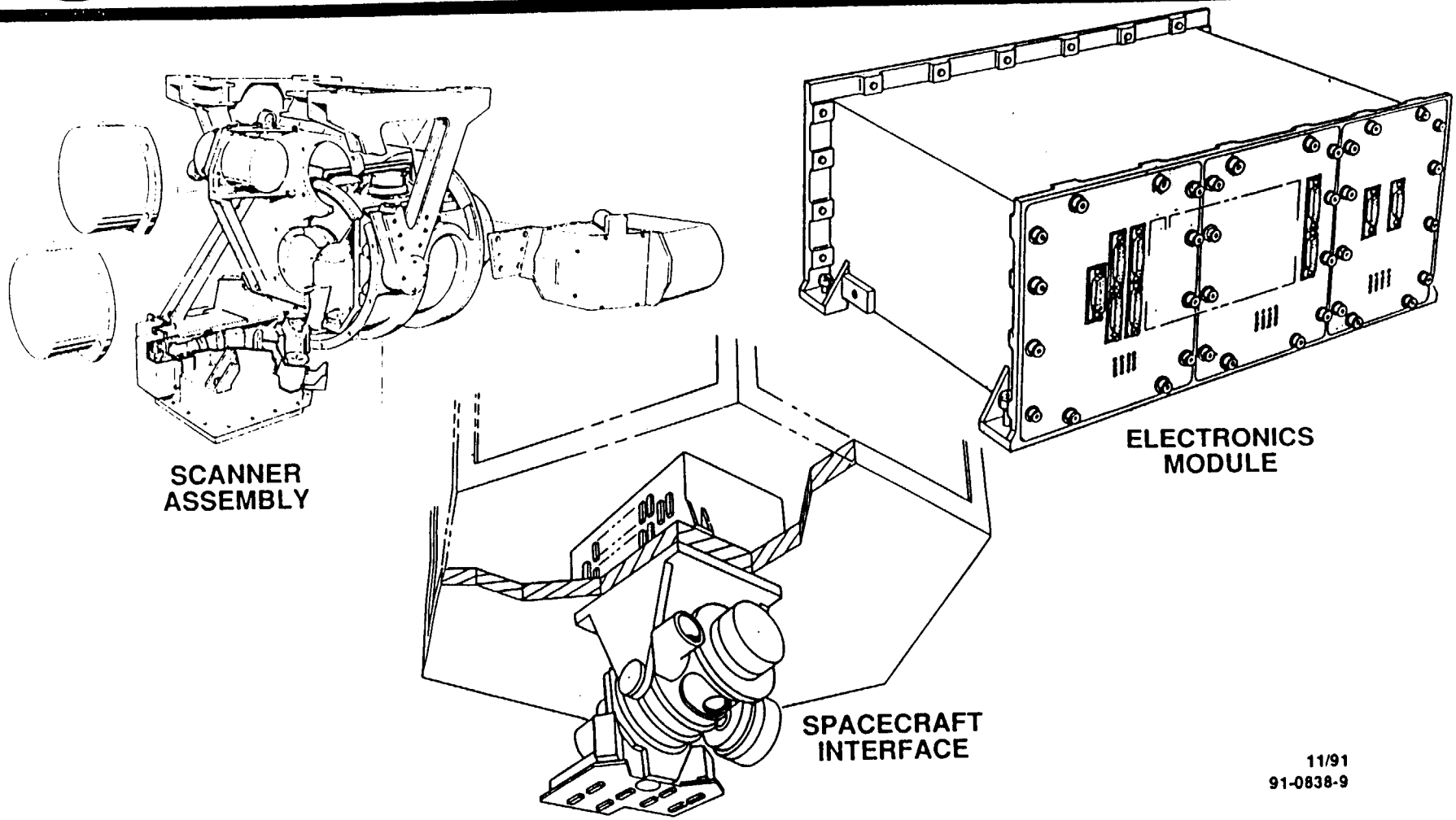

11/91
91-0838-9

SCANNER ASSEMBLY

HUGHES

SANTA BARBARA RESEARCH CENTER
a subsidiary

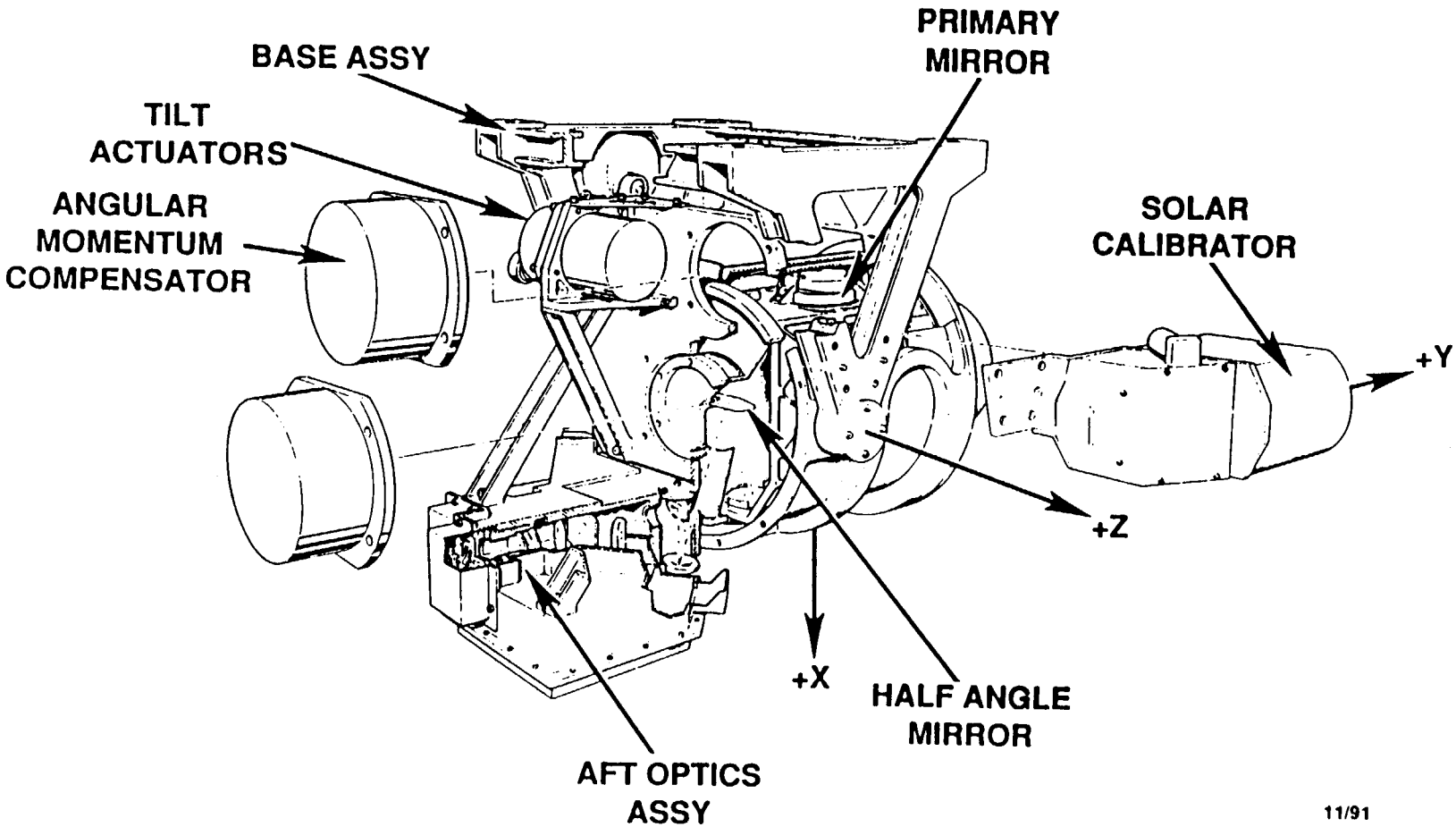

11/91
91-0838-10

SOLAR CALIBRATOR ASSEMBLY USES A DOOR TO PROTECT DIFFUSER DURING ORBIT INSERTION

HUGHES

SANTA BARBARA RESEARCH CENTER

a subsidiary

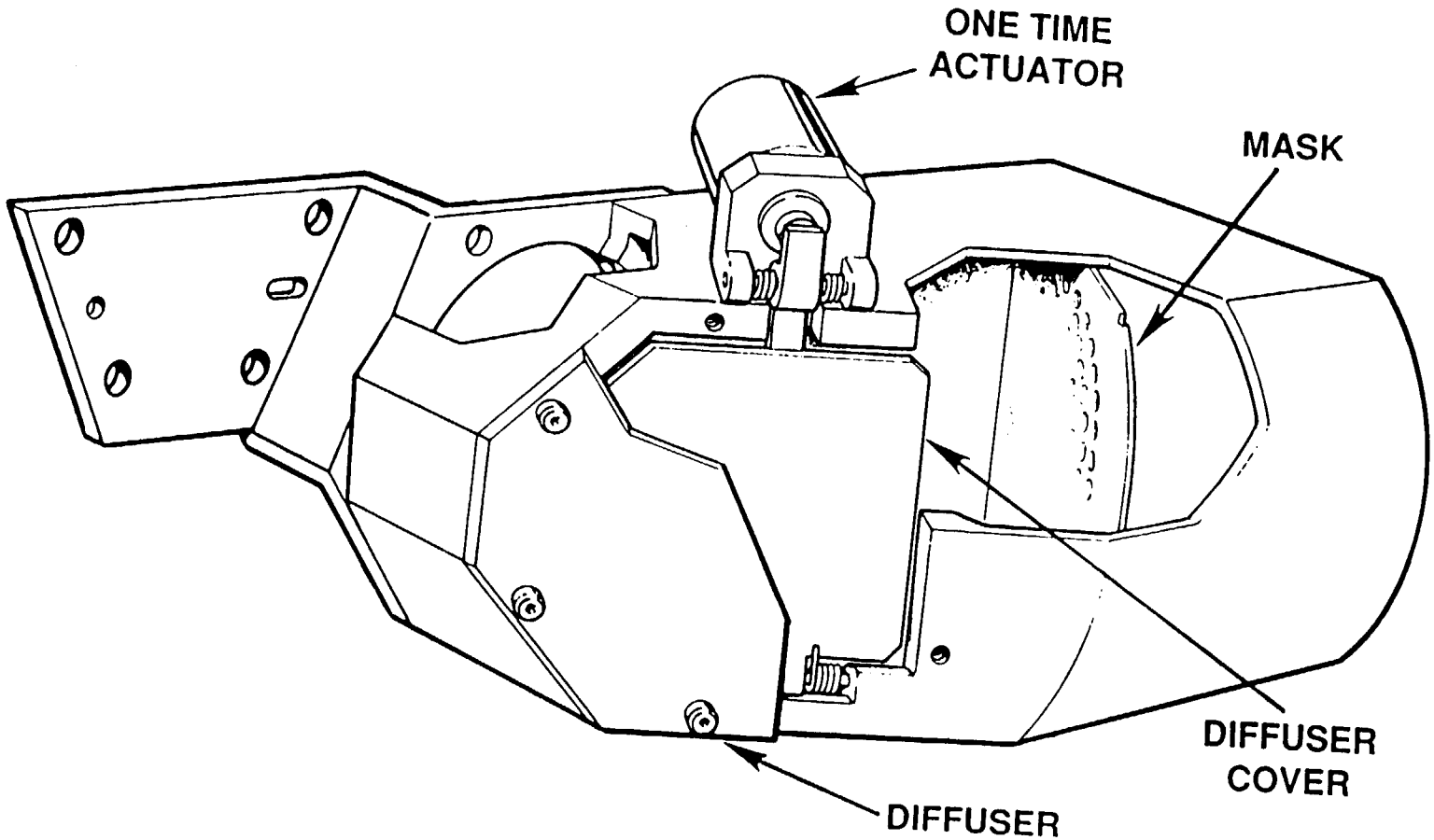

11/91
91-0838-61

SeaWiFS INSTRUMENT IS CONTROLLED BY AN HP COMPUTER THROUGH VXI CARDS

HUGHES

SANTA BARBARA RESEARCH CENTER
a subsidiary

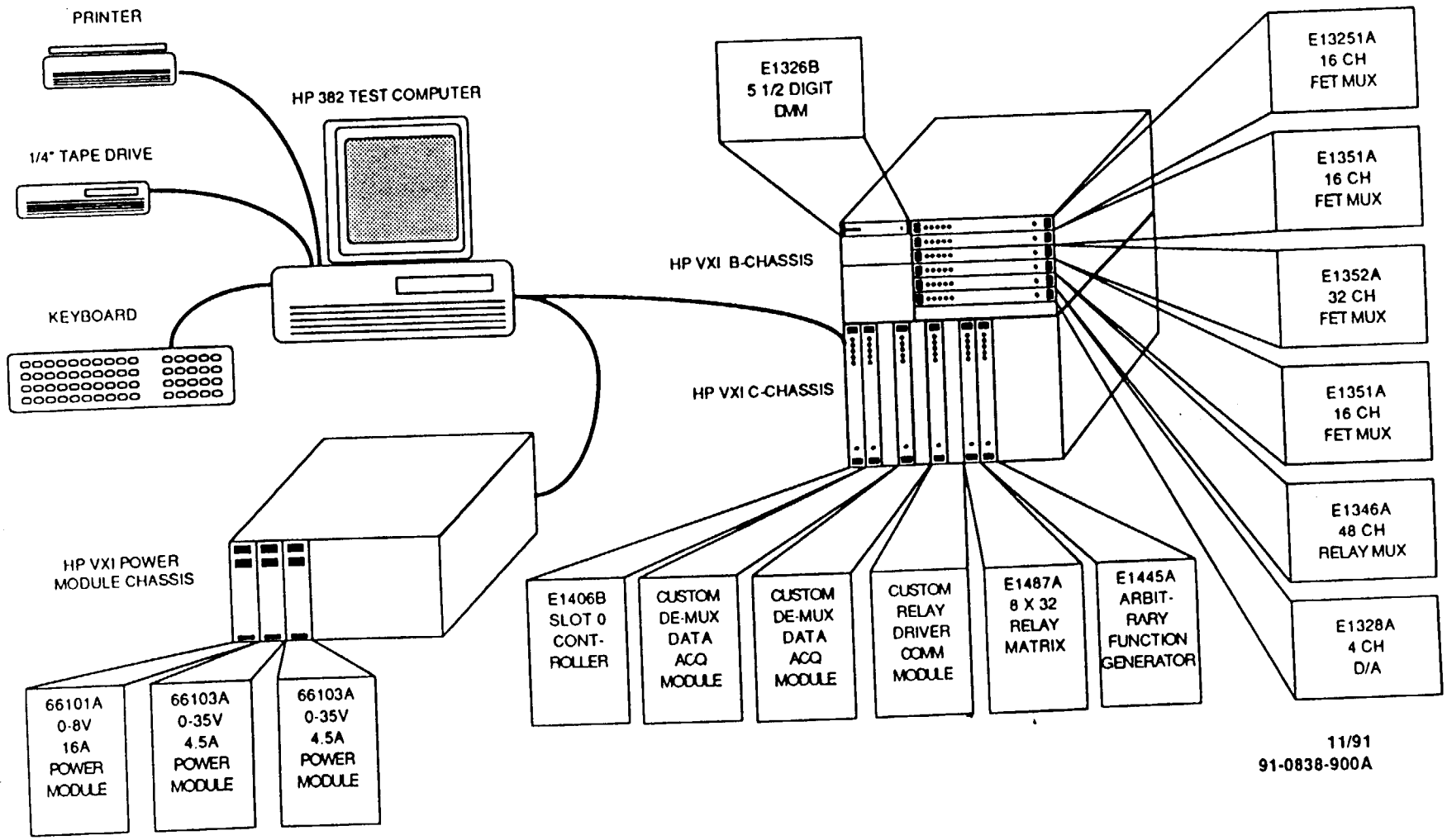

11/91
91-0838-900A

SeaWiFS BTCE: BLOCK DIAGRAM

HUGHES
SANTA BARBARA RESEARCH CENTER
a subsidiary

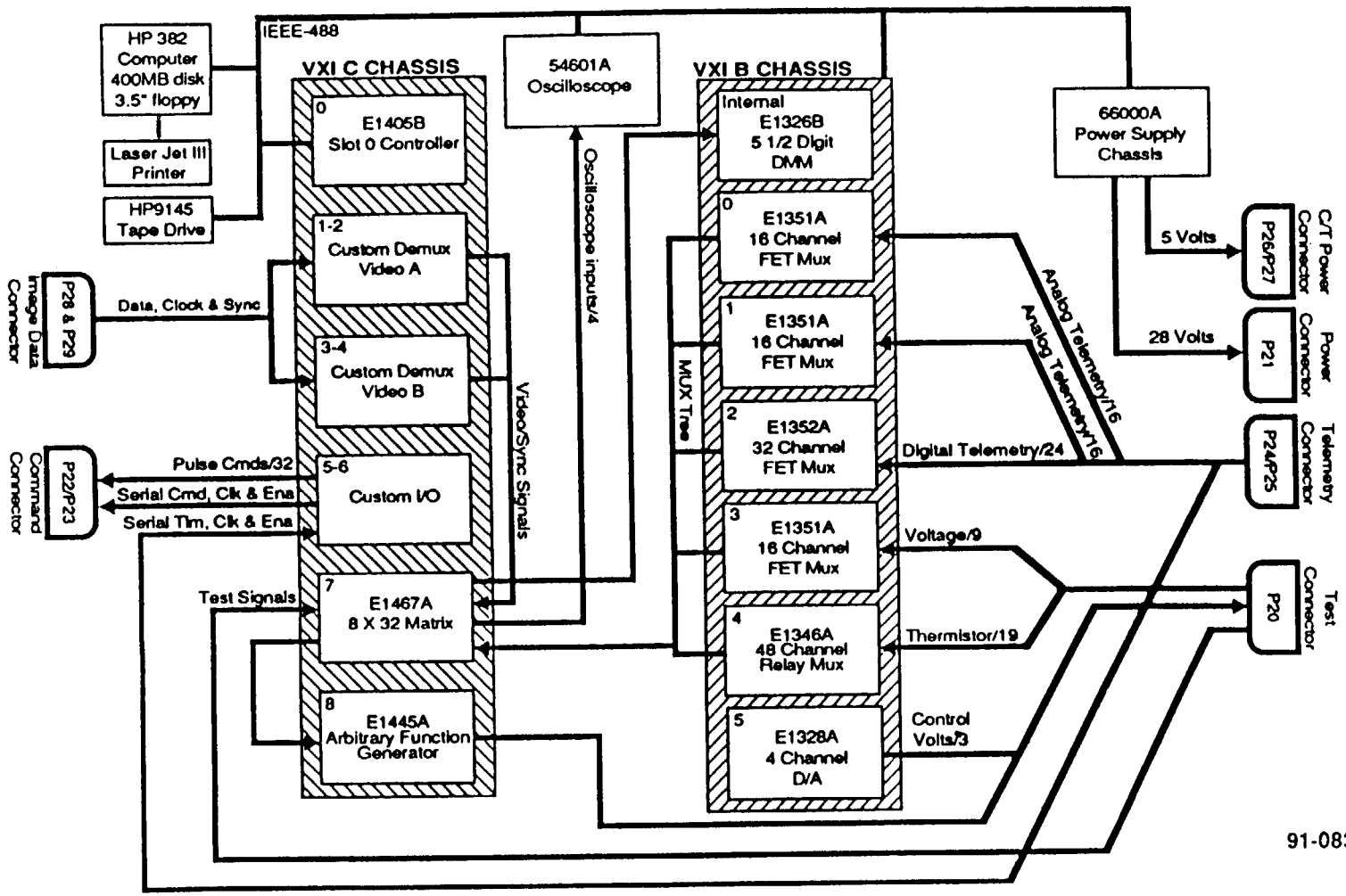

11/91
91-0838-901

Store 300 scan lines or any portion (i.e. 600 2 scans)

INSTRUMENT INTEGRATION AND CALIBRATION SEQUENCE

HUGHES

SANTA BARBARA RESEARCH CENTER
a subsidiary

INTEGRATION TESTS

- GROUND ISOLATION
- POWER AND VOLTAGE MEASUREMENTS
- COMMAND/TELEMETRY VERIFICATION
- MECHANICAL FUNCTIONAL
- VIDEO SIGNAL PATH FUNCTIONAL
- RADIOMETRIC ADJUSTMENT
- POSITIONAL ADJUSTMENT
- TDI TEST
- COHERENT NOISE
- TRANSIENT POWER

MASS PROPERTIES AND EMI

- WEIGHT
- CENTER OF GRAVITY
- MOMENT OF INTERTIA
- UNCOMPENSATED ANGULAR MOMENTUM MEASUREMENT
- EMI TESTS

BASELINE FUNCTIONAL TEST

- GROUND ISOLATION
- POWER AND VOLTAGE MEASUREMENTS
- COMMAND/TELEMETRY VERIFICATION
- MECHANISM FUNCTIONAL
- CLOCK FREQUENCIES
- COHERENT NOISE
- GAIN AND OFFSET MEASUREMENT
- SNR MEASUREMENT
- MTF MEASUREMENTS
- POSITIONAL CALIBRATION
- CROSS-STRAP TEST

RADIOMETRIC CALIBRATION

- ABSOLUTE SENSITIVITY
- SCAN MODULATION
- RELATIVE SPECTRAL RESPONSE
- POLARIZATION VARIATION
- SOLAR CALIBRATOR CHARACTERIZATION

VIBRATION

11/91
91-0838-1001

INSTRUMENT INTEGRATION AND CALIBRATION SEQUENCE (CONT.)

HUGHES

SANTA BARBARA RESEARCH CENTER
a subsidiary

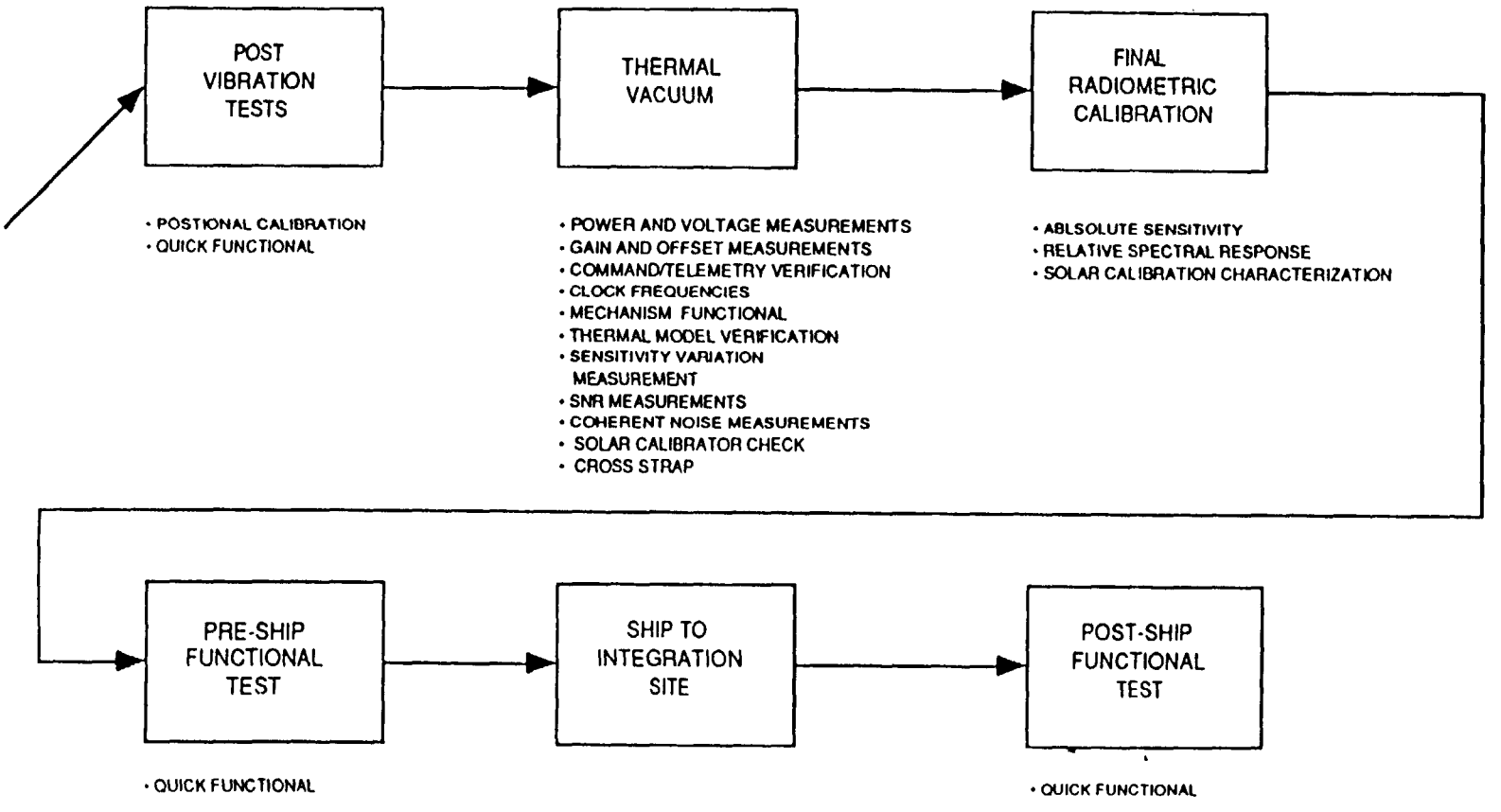

11/91
91-0838-1002

NOMINAL SNR EXPECTED EXCEEDS REQUIREMENTS

HUGHES

SANTA BARBARA RESEARCH CENTER
a subsidiary

1/17/92

BAND	λ_{CENTER}	SNR, 4:1 TDI	SNR, 2:1 TDI	SPEC
1	412	804 974	728	499
2	443	913 1040	781	674
3	490	1020 1100	833	667
4	510	994 1040	782	616
5	555	967 967	722	581
6	670	801 797	584	447
7	765	968 874	645	455
8	864	776 770	563	467

- ESTIMATE ASSUMES RESISTOR NOISE LIMITED PREAMP, AND SPECIFIED MINIMUM RESPONSIVITIES AND OPTICAL THROUGHPUT

INSTRUMENT CALIBRATION SEQUENCE

HUGHES

SANTA BARBARA RESEARCH CENTER
a subsidiary

- PRE INTEGRATION:
  - CHARACTERIZE OPTICAL COMPONENTS
    - SPECTRAL BAND PASS FILTERS
    - DICHROIC FILTERS
    - LENSES
    - MIRRORS
  - USE WITNESS PIECES

INSTRUMENT CALIBRATION SEQUENCE (CONTINUED)

HUGHES

SANTA BARBARA RESEARCH CENTER
a subsidiary

- POST INTEGRATION:
  - PERFORM PRE-CALIBRATION RADIOMETRIC MEASUREMENTS
  - ADJUST VIDEO POST AMPLIFIER GAINS
  - PERFORM GAIN AND OFFSET MEASUREMENTS
  - RADIOMETRIC CALIBRATION (PRE-THERMAL VACUUM)
  - PERFORM SCAN MODULATION MEASUREMENTS
  - CALIBRATE SOLAR DIFFUSER (Send witness samples to GSFC)
  - PERFORM RELATIVE SPECTRAL RESPONSE MEASUREMENTS
  - PERFORM SENSITIVITY VARIATION MEASUREMENTS IN THERMAL VACUUM (INCLUDING CHAMBER WINDOW THROUGHPUT MEASUREMENTS)
  - PERFORM POST-THERMAL VACUUM FINAL RADIOMETRIC CALIBRATION

RADIOMETRIC CALIBRATION OF THE INSTRUMENT WILL MEASURE ABSOLUTE SENSITIVITY

HUGHES

SANTA BARBARA RESEARCH CENTER
a subsidiary

- AMBIENT MEASUREMENTS:
  - FOUR APPROXIMATELY EQUALLY SPACED RADIANCE LEVELS RANGING FROM AS NEAR SATURATION AS POSSIBLE TO DARK
  - COLLECT 4:1 TDI DATA

- THERMAL VACUUM MEASUREMENTS:
  - A MINIMUM OF TWO RADIANCE LEVELS: AS NEAR SATURATION AS POSSIBLE, AND ZERO
  - COLLECT 4:1 DATA
  - DATA COLLECTED DURING 40% DUTY PERIODS

We do orbital sim.
Eco off in dark side

11/91
91-0838-1021

"IN-AIR" RADIOMETRIC MEASUREMENT SETUP

HUGHES

SANTA BARBARA RESEARCH CENTER
a subsidiary

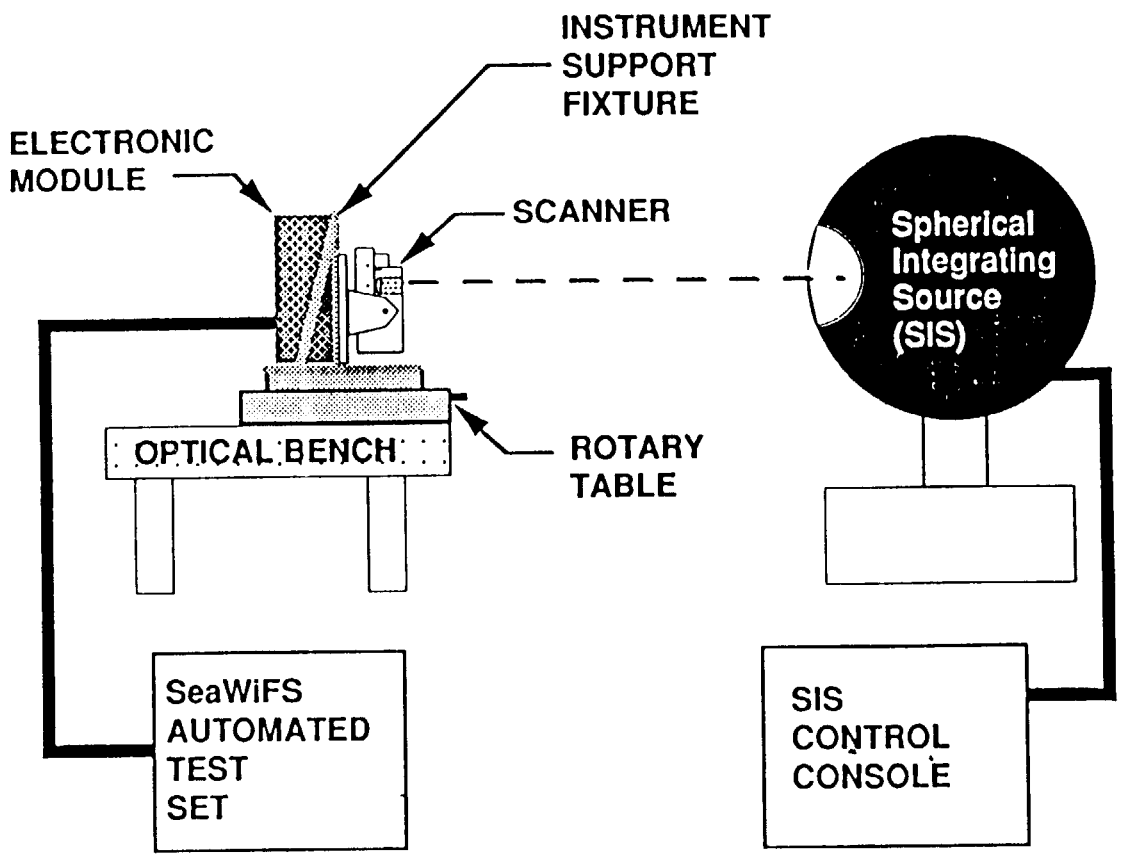

11/91
91-0838-1022

POLARIZATION SENSITIVITY MEASUREMENTS WILL DEMONSTRATE INSTRUMENT'S IMMUNITY TO EFFECTS OF POLARIZED LIGHT

HUGHES

SANTA BARBARA RESEARCH CENTER
a subsidiary

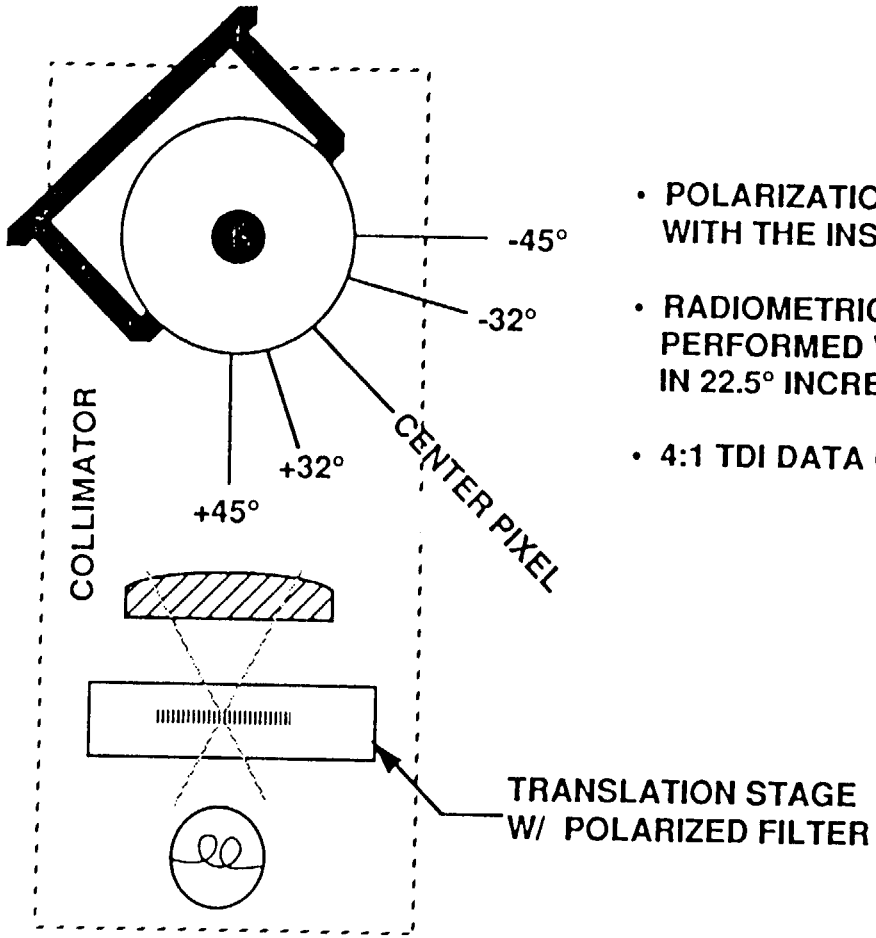

- POLARIZATION SENSITIVITY MEASUREMENTS ARE MADE WITH THE INSTRUMENT AT CENTER PIXEL, ± 45° AND ± 32°.
- RADIOMETRIC SENSITIVITY MEASUREMENTS ARE PERFORMED WITH THE FILTER ROTATED FROM 0° TO 360° IN 22.5° INCREMENTS (16 POSITIONS)
- 4:1 TDI DATA COLLECTED

11/91
91-0838-1026

DYNAMIC IFOV, BBR, AND MTF MEASUREMENTS ARE PERFORMED ON A COLLIMATOR

HUGHES

SANTA BARBARA RESEARCH CENTER
a subsidiary

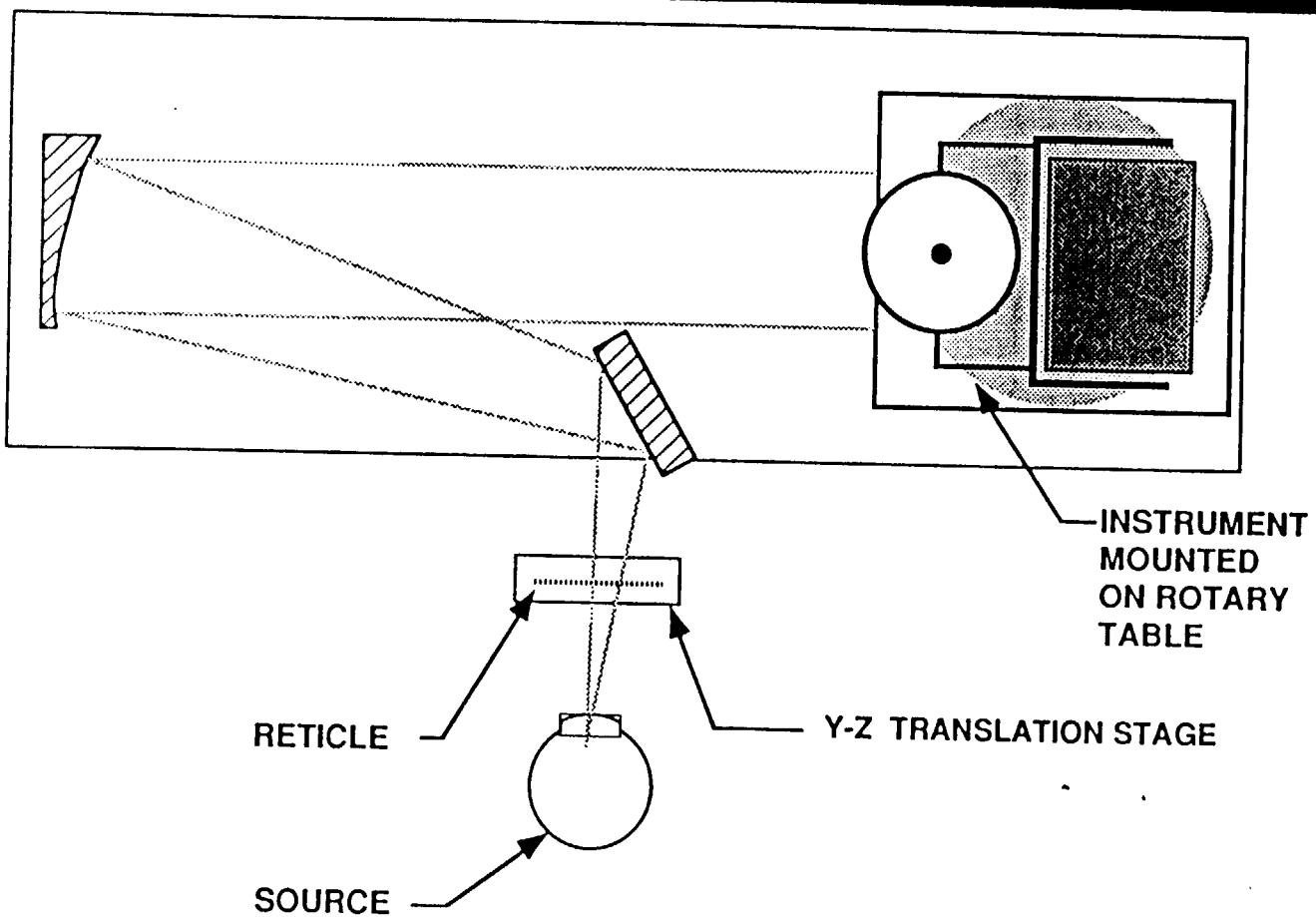

11/91
91-0838-1027

SeaWiFS/THERMAL VACUUM CHAMBER LAYOUT

HUGHES

SANTA BARBARA RESEARCH CENTER
a subsidiary

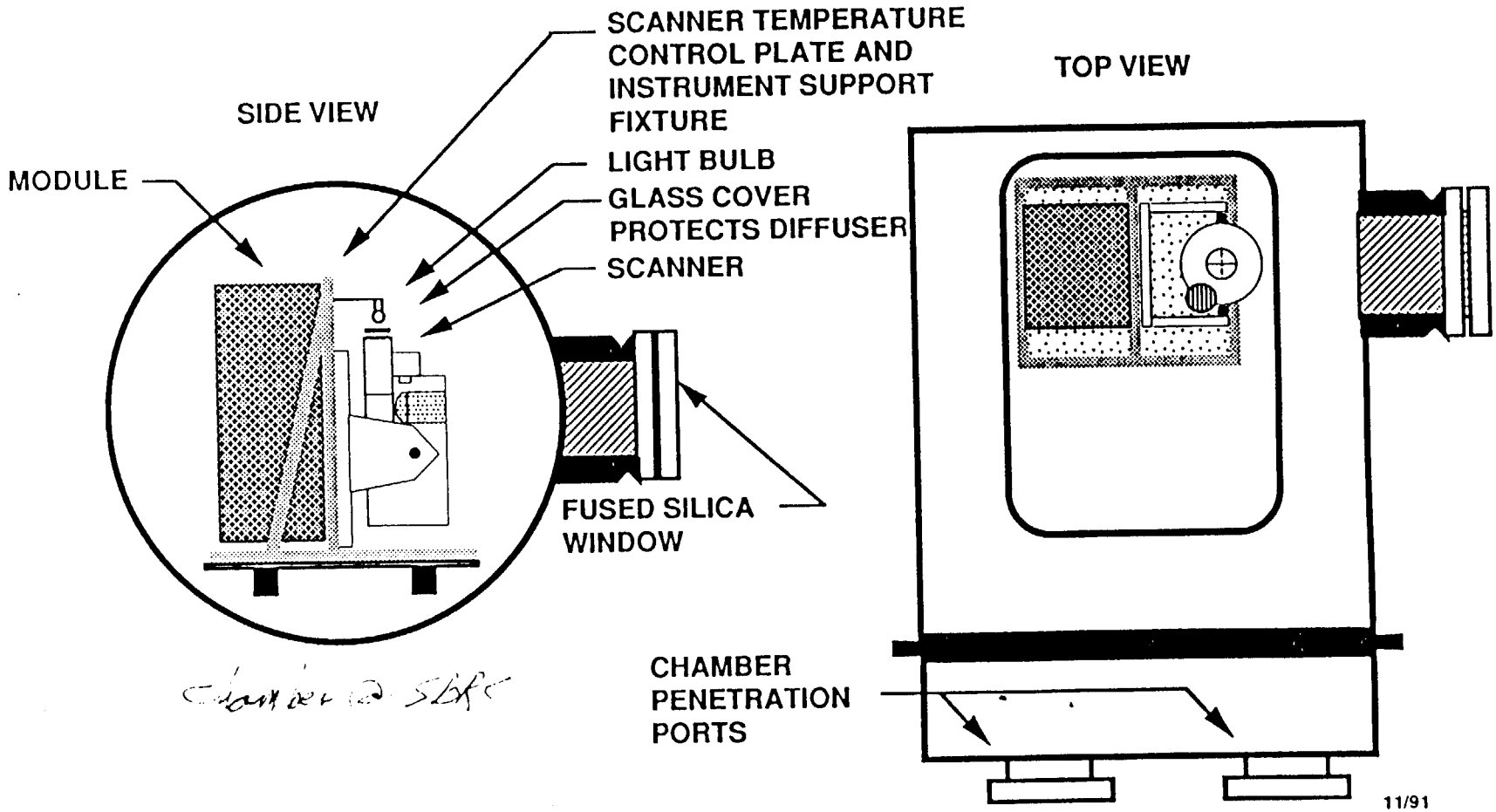

11/91
91-0838-1038

THERMAL VACUUM TESTING IS PERFORMED AT THREE TEMPERATURES

HUGHES

SANTA BARBARA RESEARCH CENTER
a subsidiary

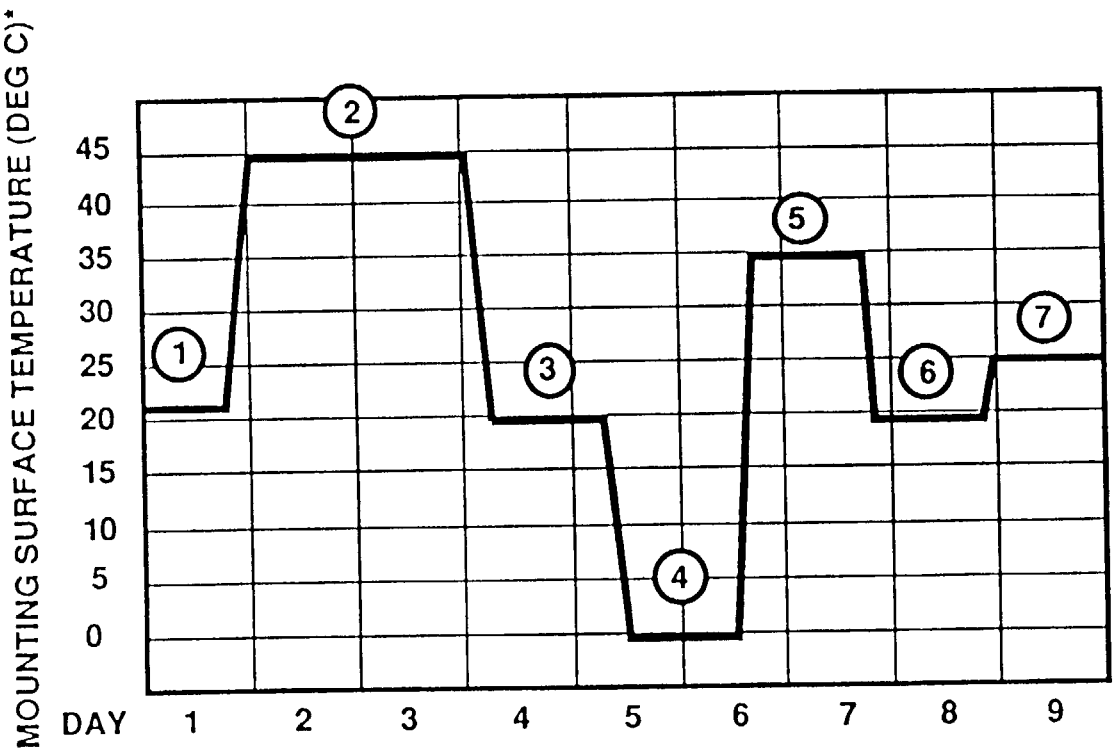

NOTE: TIME AT TEMPERATURE PLATEAUS AND TEMPERATURE TRANSITION CURVES ARE SYMBOLIC.

* THERMAL INPUTS WILL BE DESIGNED TO VERIFY THERMAL MODEL

TEST EVENTS:

1. INSTALL INSTRUMENT PERFORM WINDOW THRU-PUT MEASUREIMENT.
2. BAKE OUT AT 45 ° C.
3. CALIBRATION CHECK AND TEST AT 20 ° C.
4. CALIBRATION CHECK AND TEST AT 0 ° C. (Radiom. Ch.
5. CALIBRATION CHECK AND TEST AT 35 ° C.
6. CALIBRATION CHECK AND TEST AT 20 ° C.
7. RETURN TO AMBIENT. PERFORM IN-AIR CALIBRATION CHECK. REMOVE INSTRUMENT FROM CHAMBER .

11/91
91-0838-1039