ATTACHMENT 9

MODIS

Effect of Replan on Test & Cal

Presented to NASA GSFC
Greenbelt, Maryland

5 May, 1994

T. Pagano

Attachment 9

HUGHES

SANTA BARBARA RESEARCH CENTER
a subsidiary

Critical EM Testing Preserved

HUGHES
SANTA BARBARA RESEARCH CENTER
a subsidiary

Test	EM	PF
• Radiometric Response SNR, Linearity, Dy. Range, Noise	Ambient T/V	Ambient T/V
• Spectral Response C.W.L, B.W., O.O.B	Ambient T/V*	Ambient T/V
• Spatial Response Registration, IFOV, MTF	Ambient T/V*	Ambient T/V
• Transient Response Ghosting, Crosstalk, Scatter	Ambient	Ambient
• Stray Light	Ambient	Ambient
• Polarization Response	Ambient	Ambient

* No MWIR/LWIR Due to Window Absorption

MODIS Test & Calibration Activities Overview

HUGHES
SANTA BARBARA RESEARCH CENTER
a subsidiary

- Engineering Model

  All Performance Tests Performed on EM Except

  a) MWIR/LWIR Spectral in T/V
  b) MWIR/LWIR Registration in T/V
  c) Warm-Target Within-Field Stray Light

  Additional Tests Not Performed on EM

  a) 1g Release, Pointing Accuracy
  b) On-Board Calibrator Check-outs
  c) Mass Properties, Modal Survey
  d) Acoustics, Magnetic Mapping, EMI/EMC

- Protoflight Model

  All Test Performed

REQUIRED TESTS FOR SYSTEM LEVEL CALIBRATION AND CHARACTERIZATION

HUGHES

SANTA BARBARA RESEARCH CENTER
a subsidiary

TEST PARAMETER	SPEC PARA	TEST PROCEDURE	TEST ENVIRONMENT	SCAN MIRROR STATUS	GSE OPTICAL STIMULI
SPATIAL - IFOV RESPONSE UNIFORMITY	3.3.1 3.4.5.4	152781	AMB LAB	NON-SCANNING	IAC WITH SLITS
SPECTRAL WAVELENGTH TOLERANCE OUT OF BAND RIPPLE WAVELENGTH STABILITY WAVELENGTH ACCURACY	3.3.3 3.3.3.2 3.3.3.3 3.3.3.4 3.4.7.4 3.4.7.5	152792	AMB LAB AND T/V AMB LAB AND T/V AMB LAB AMB LAB AND T/V AMB LAB AND T/V AMB LAB AND T/V	NON-SCANNING	MGBC+MONOCHROMATOR (SSMA FOR EM) ↑ Spectral scatter mod assembly
POLARIZATION	3.3.5	152793	AMB LAB	NON-SCANNING	COLLIMATOR +POLARIZER PRISM
MTF	3.4.2	152788	AMB LAB AND T/V	SCANNING	MGBC+SLITS; IAC + SLITS
TRANSIENT RESPONSE	3.4.4	152789	AMB LAB	SCANNING	~~MGBC+RETICLES~~ SSMA
RADIOMETRIC PERFORMANCE DYNAMIC RANGE SNR SYSTEM NOISE MEAS CH TO CH UNIFORMITY SYSTEM NOISE LINEARITY SYSTEM CROSSTALK GHOSTING	3.4.5 3.4.1 3.4.1 3.4.5.5 3.4.5.3.2 3.4.5.5 3.4.5.3.3 3.4.5.5	VIS/NIR/SWIR 152784 MWIR/LWIR 152785 152787 ( )	AMB LAB AND T/V AMB LAB AMB LAB	SCANNING SCANNING SCANNING	SIS(100) AND BCS ~~MGBC + WIDE SLITS~~ ~~MGBC + FULL FIELD~~ SSMA
GEOMETRIC PERFORMANCE POINTING KNOWLEDGE ALIGNMENT CHANGE SPECTRAL BAND REG	3.4.6 3.4.6.1 3.4.6.2 3.4.6.3	 152791 152791 152790	 AMB LAB AMB LAB AMB LAB AND T/V	 NON-SCANNING NON-SCANNING SCANNING	 MGBC + PTG ASSY MGBC + PTG ASSY (IAC FOR EM) MGBC+SBR RETICLES
RADIOMETRIC STABILITY SHORT TERM LONG TERM SPECTRAL BAND TO BAND	3.4.7 3.4.7.1 3.4.7.2 3.4.7.3	VIS/NIR/SWIR 152784 MWIR/LWIR 152785	 AMB LAB ANALYSIS AMB LAB AND T/V	SCANNING	 SIS(100) AND BCS NA SIS(100) AND BCS
STRAY LIGHT DIRECT SUNLIGHT BRIGHT TARGET DARK TARGET WARM TARGET	3.4.8 3.4.8.1 3.4.8.2 3.4.8.3 3.4.8.4	 152797 152794 152794 152796	AMB LAB AMB LAB AMB LAB AMB LAB AMB LAB	SCANNING	 SOLAR TEST SOURCE SIS(100) SIS(100) MGBC-TARGET (NO EM) RETICLE

12/93
93-0868-660

Calibration Equipment
EM to PF

HUGHES
SANTA BARBARA RESEARCH CENTER
a subsidiary

Test	EM	PF
• Radiometric Response SNR, Linearity, Dy. Range, Noise	SIS, BCS	SIS, BCS
• Spectral Response C.W.L, B.W., O.O.B	SSMA	MGBC
• Spatial Response Registration, IFOV, MTF	IAC	MGBC
• Transient Response Ghosting, Crosstalk, Scatter	SSMA	SSMA
• Stray Light	SIS*	SIS, MGBC
• Polarization Response	PMA	PMA

* No Warm-Target Within Field Stray Light

SIS(100) SYSTEM DESIGN

HUGHES

SANTA BARBARA RESEARCH CENTER
a subsidiary

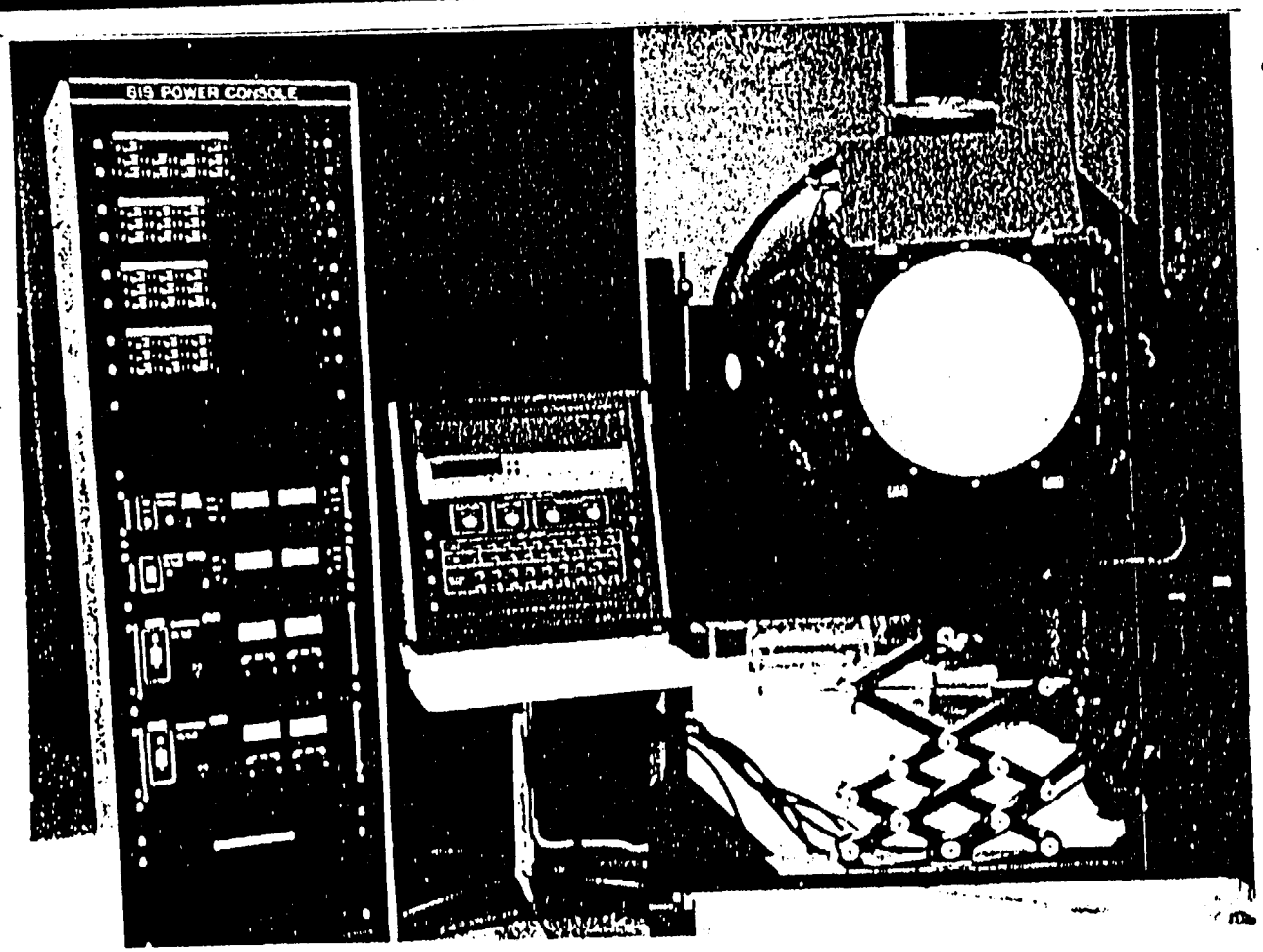

- SPHERE DIA. 100 cm(40 inch)
- APERTURE DIA. 45.7 cm(18 inch)
- 37 INDIVIDUALLY SWITCHED QUARTZ HALOGEN LAMPS
- 4050 TOTAL WATTS
- SPECTRAFLECT INTERIOR COATING
- EXTRA BACK HEMISPHERE WITH PORTHOLE FOR MODIS STRAY LIGHT TESTING

SIS(100) REQUIREMENTS

HUGHES
SANTA BARBARA RESEARCH CENTER
a subsidiary

TESTS

SNR	STRAY LIGHT	DYNAMIC RANGE	RADIOMETRIC CALIBRATION	RADIOMETRIC STABILITY	CHANNEL TO CHANNEL UNIFORMITY

REQUIREMENTS

TYPE OF REQUIREMENT	MODIS PRIME ITEM REQUIREMENT	SIS(100) DERIVED REQUIREMENT	SIS(100) PREDICTED PERFORMANCE
• RADIOMETRIC ACCURACY @ Ltyp BANDS 1-19,& 26 (<3.0μm). **	5%, 1 SIGMA	< 3.4%, 1 SIGMA	< 3.0%, 1 SIGMA
• RADIOMETRIC ACCURACY BETWEEN 0.3Ltyp & 0.9Lmax	<6%, 1 SIGMA	< 3.9%, 1 SIGMA	< 3.5%, 1 SIGMA
• RADIOMETRIC STABILITY (short term: < 2 weeks)	<+/- 1.0%	<+/- 1.0%	<+/- 1.0%
• RADIOMETRIC STABILITY (long term: >2 weeks)	<+/- 2.0%	<+/- 2.0%	<+/- 2.0%
• RADIANCE UNIFORMITY		< 0.3%	< 0.25%

BLACKBODY CALIBRATION SOURCE ASSEMBLY

HUGHES
SANTA BARBARA RESEARCH CENTER
a subsidiary

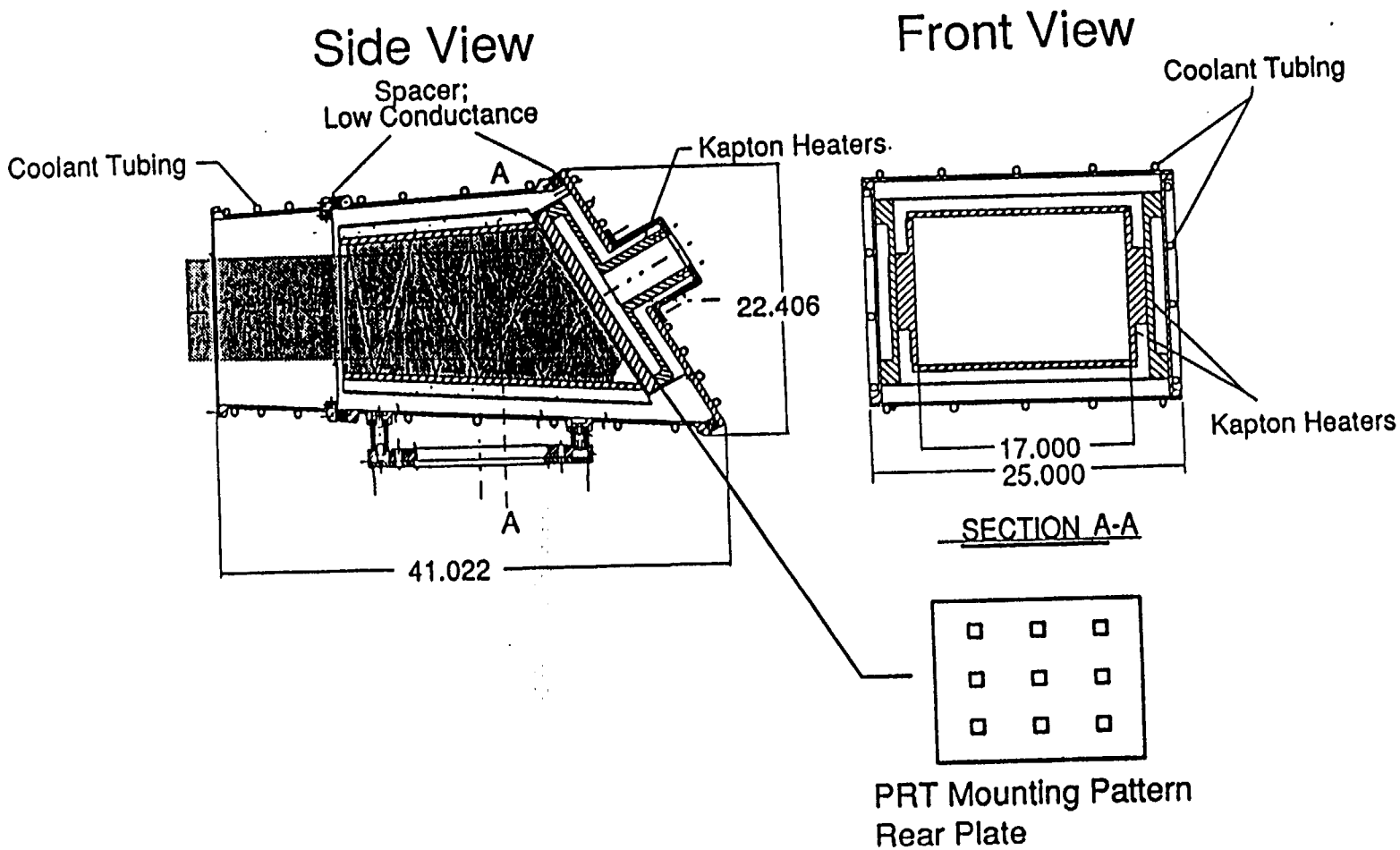

BLACKBODY CALIBRATION SOURCE

94-3-131 (23)

HUGHES

SANTA BARBARA RESEARCH CENTER
a subsidiary

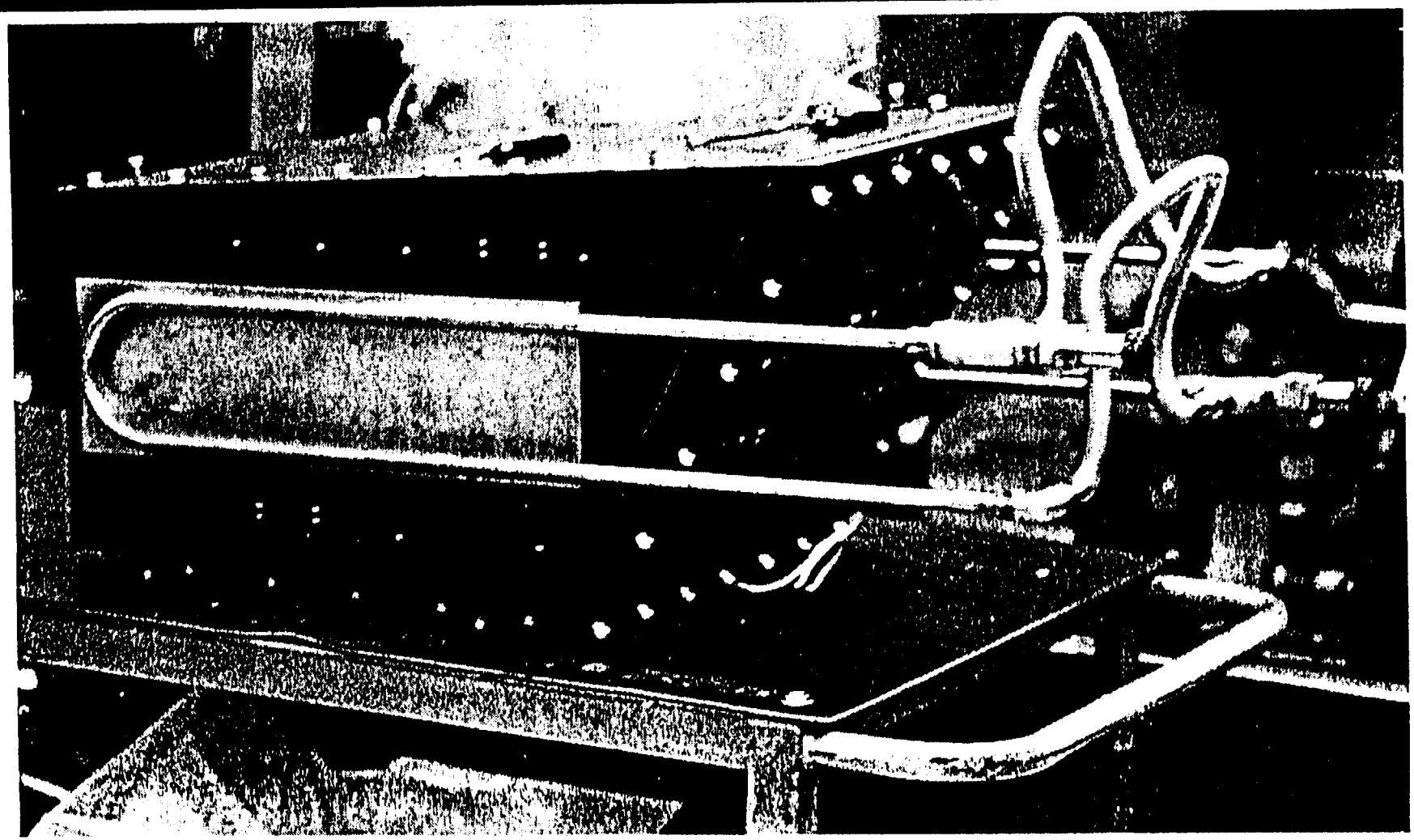

T/V CALIB AD Chart 9-1

FIG. 1

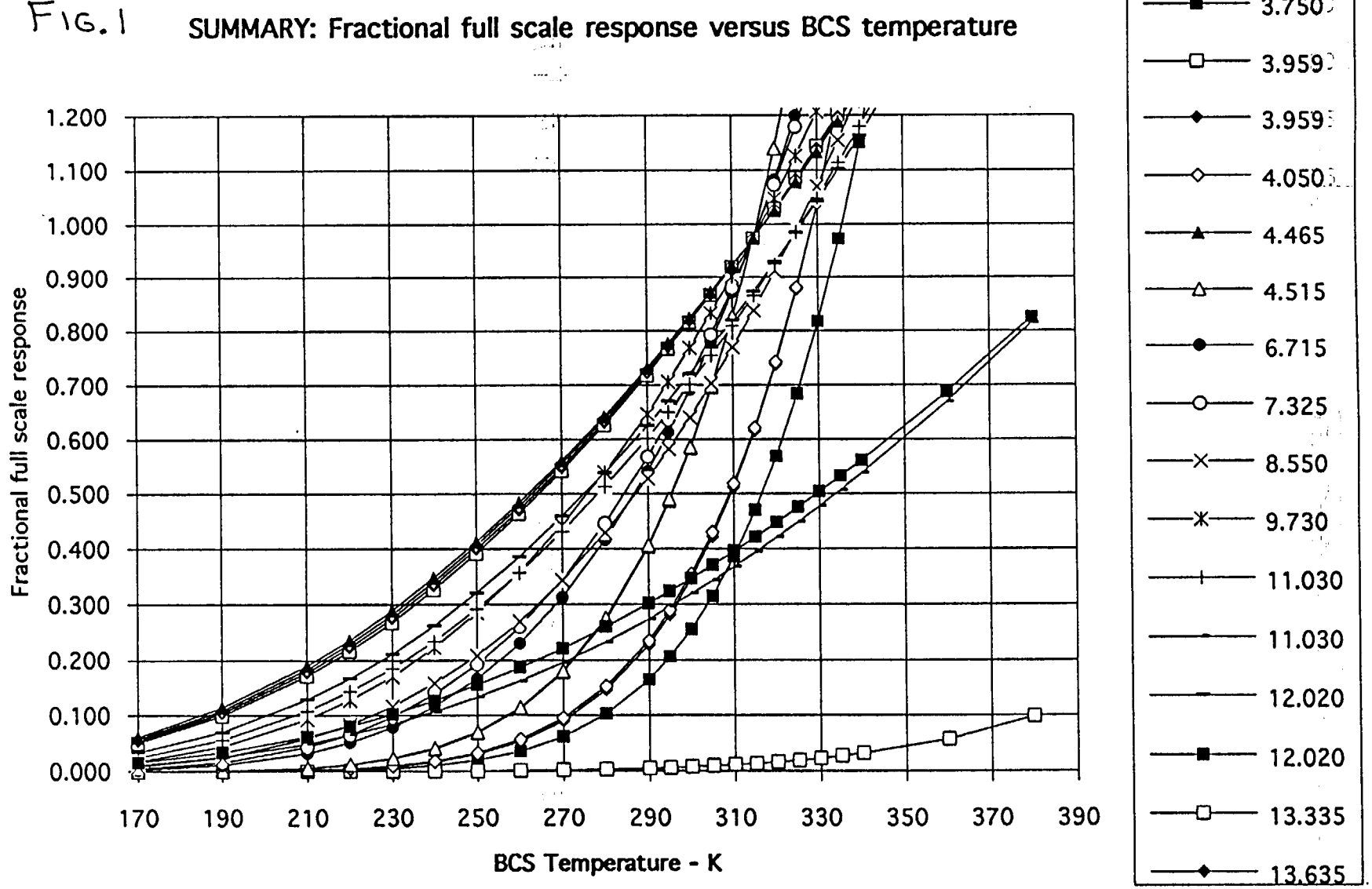

SSMA Spectral/Scatter Measurement Assy

HUGHES
SANTA BARBARA RESEARCH CENTER
a subsidiary

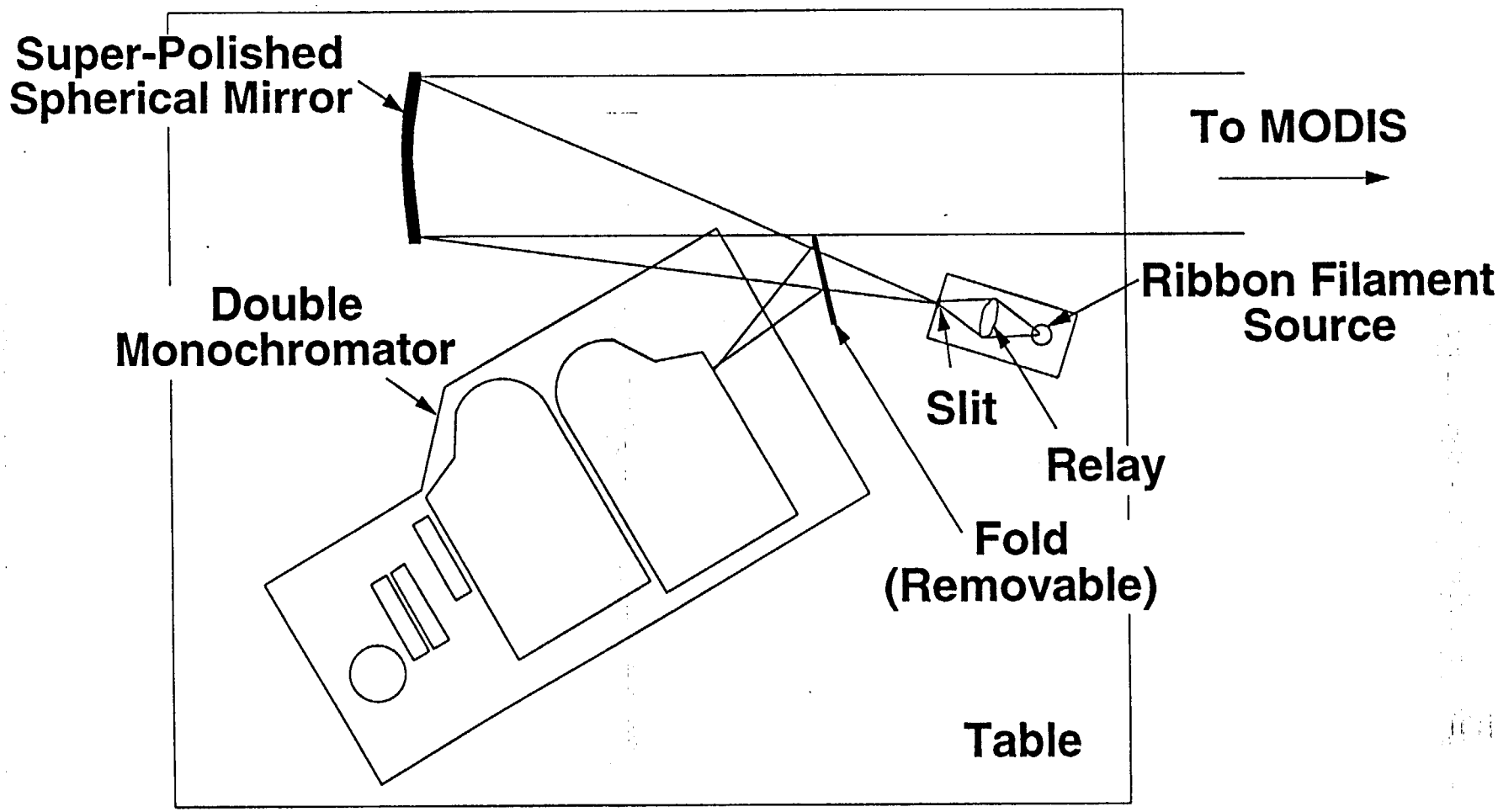

ORIEL DOUBLE MONOCHROMATOR IN HOUSE

94-3-137

HUGHES

SANTA BARBARA RESEARCH CENTER
a subsidiary

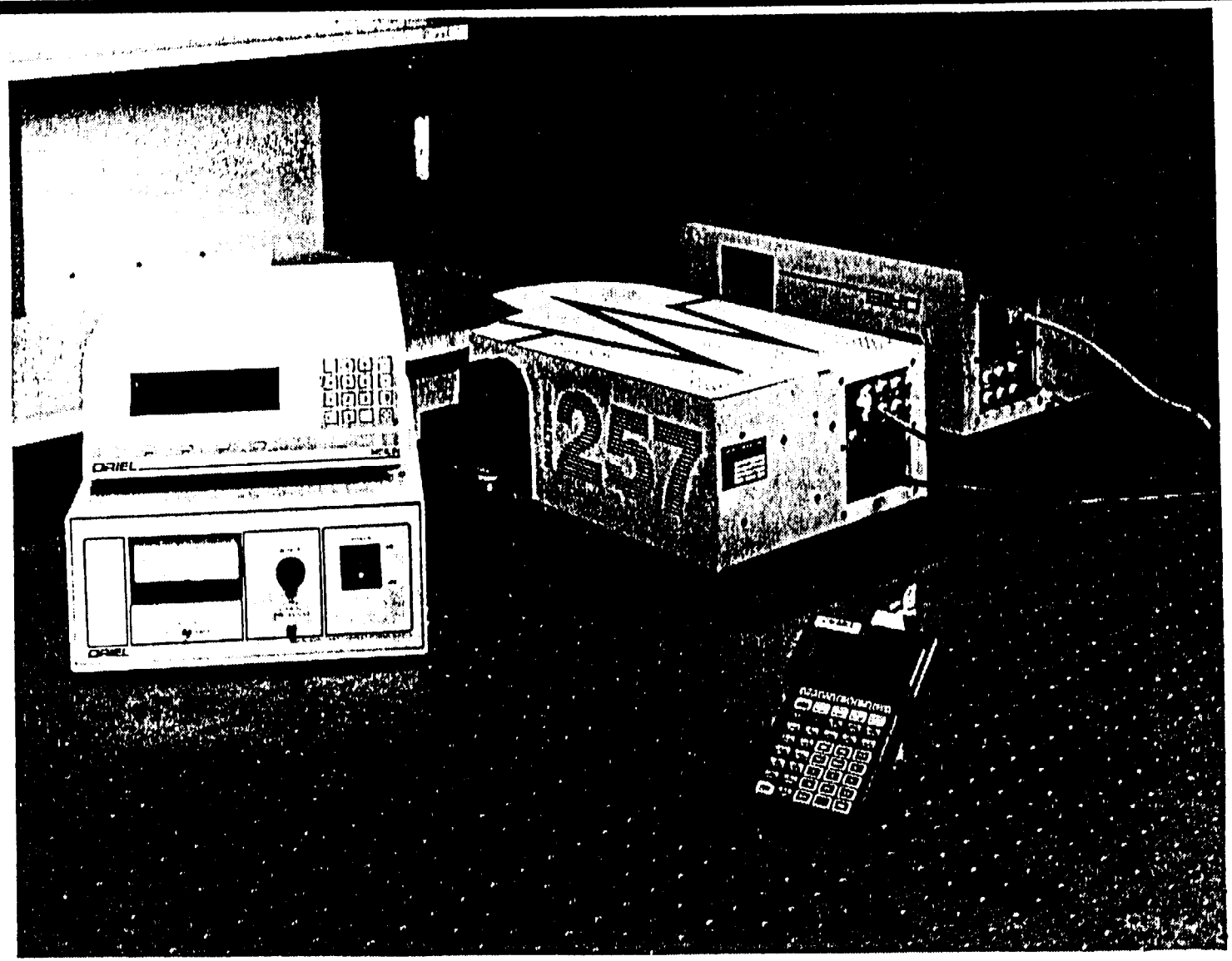

SPECTRAL MEASUREMENTS ASSEMBLY

HUGHES
SANTA BARBARA RESEARCH CENTER
a subsidiary

DOUBLE GRATING SUBTRACTIVE MONOCHROMATOR SUBSYSTEM

EXIT SLIT MICROPOSITIONING AND REFERENCE DETECTOR ASSEMBLY

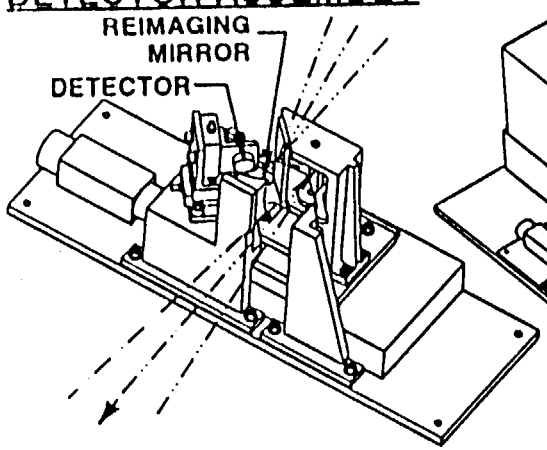

- PYROELECTRIC DETECTOR FOR RELATIVE SPECTRAL RESPONSE MEASUREMENTS
- EXIT SLIT CAN BE POSITIONED ON MODIS FOCAL PLANE WITH VERNIER POSITIONING

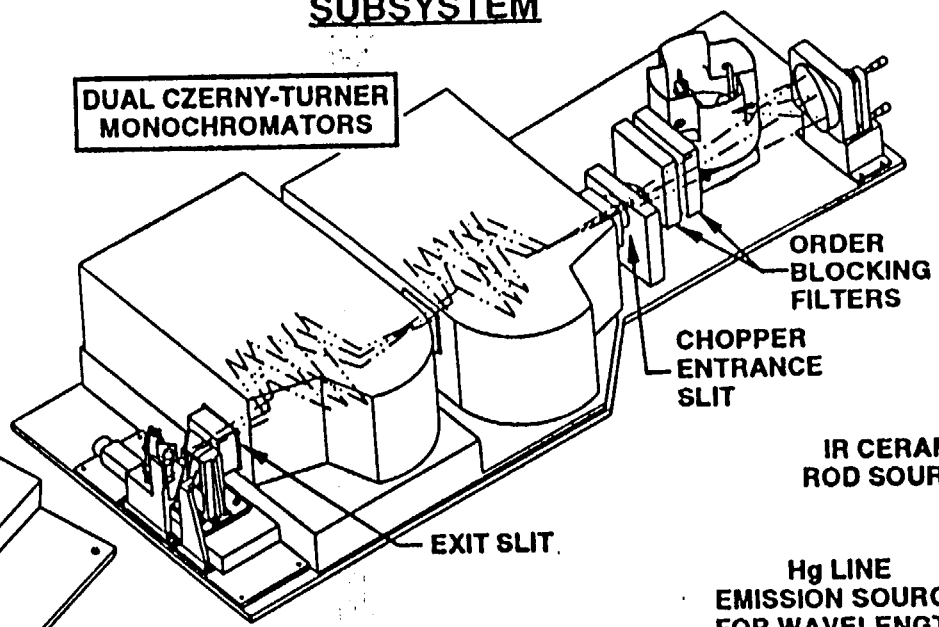

- WAVELENGTH RANGE COVERED IS 0.4UM TO 14.3UM
- SPECTRAL BANDWIDTHS FROM 2NM TO 300NM
- AUTOMATIC SLIT WIDTH CONTROL (3 SLIT MECHANISMS) FOR MAXIMIZING THROUGHPUT

SOURCE ASSEMBLY

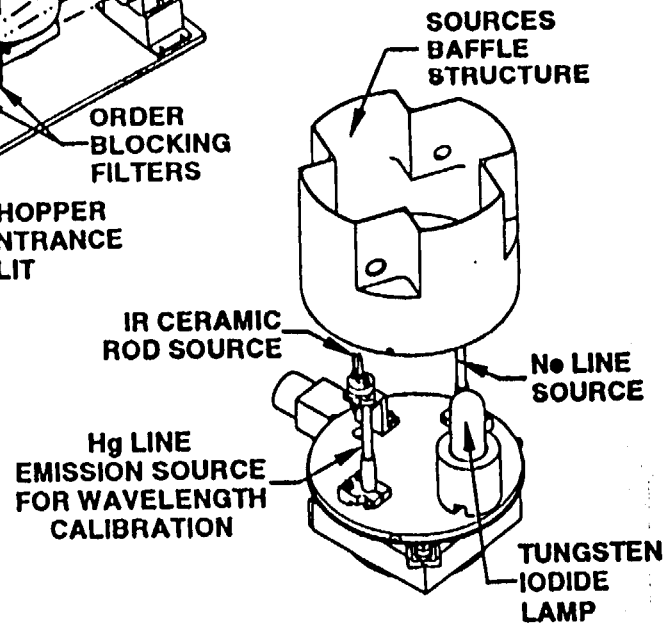

- LINE SOURCES PROVIDE WAVELENGTH CALIBRATION OVER ENTIRE RANGE
- TUNGSTEN SOURCE COVERS VIS/NIR/SWIR
- CERAMIC ROD SOURCE COVERS MWIR/LWIR

MGBC SYSTEM DESIGN CONFIGURATION

HUGHES

SANTA BARBARA RESEARCH CENTER, a subsidiary

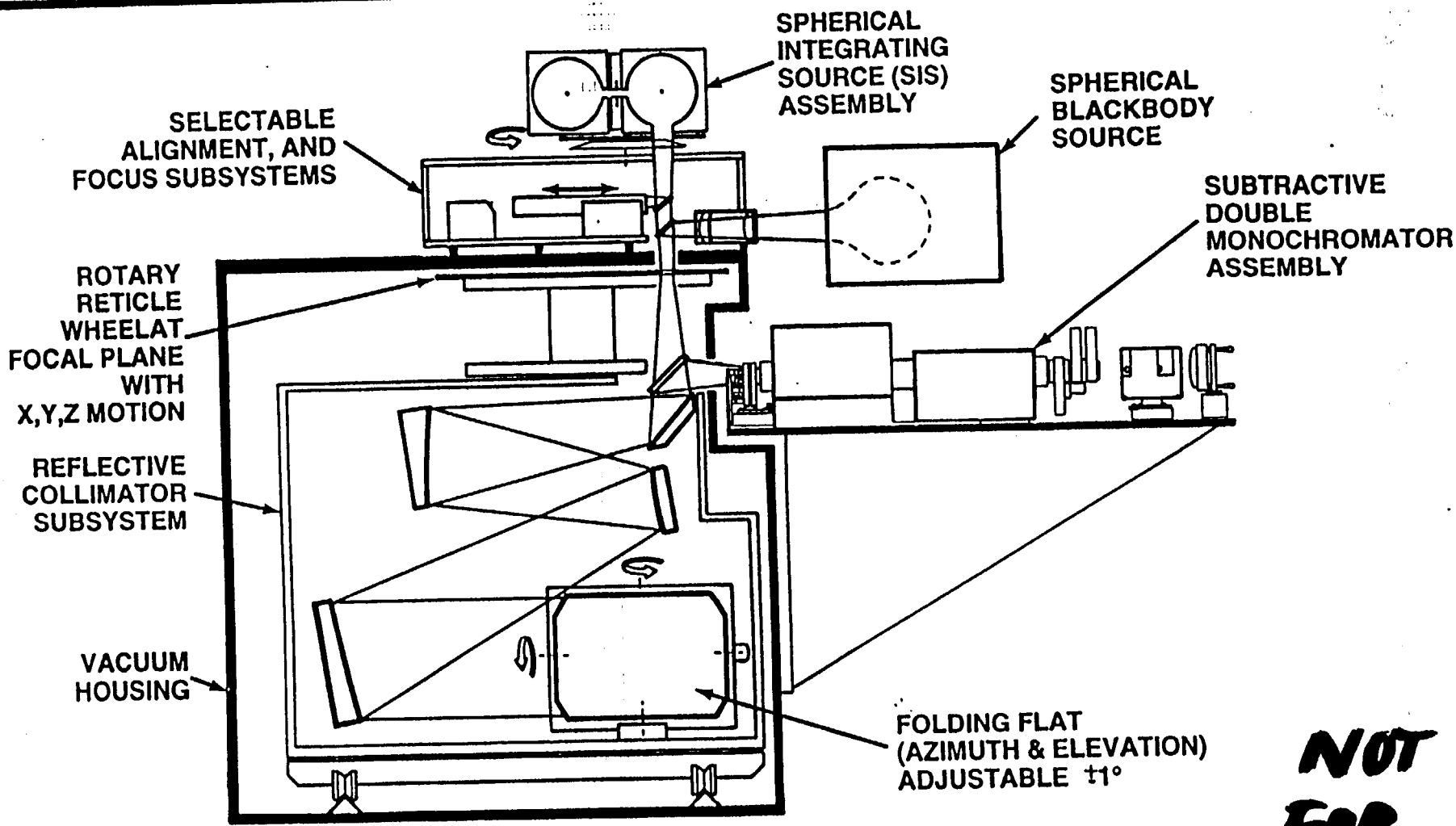

NOT FOR EM

INTEGRATION AND ALIGNMENT COLLIMATOR DESIGN

HUGHES

SANTA BARBARA RESEARCH CENTER
a subsidiary

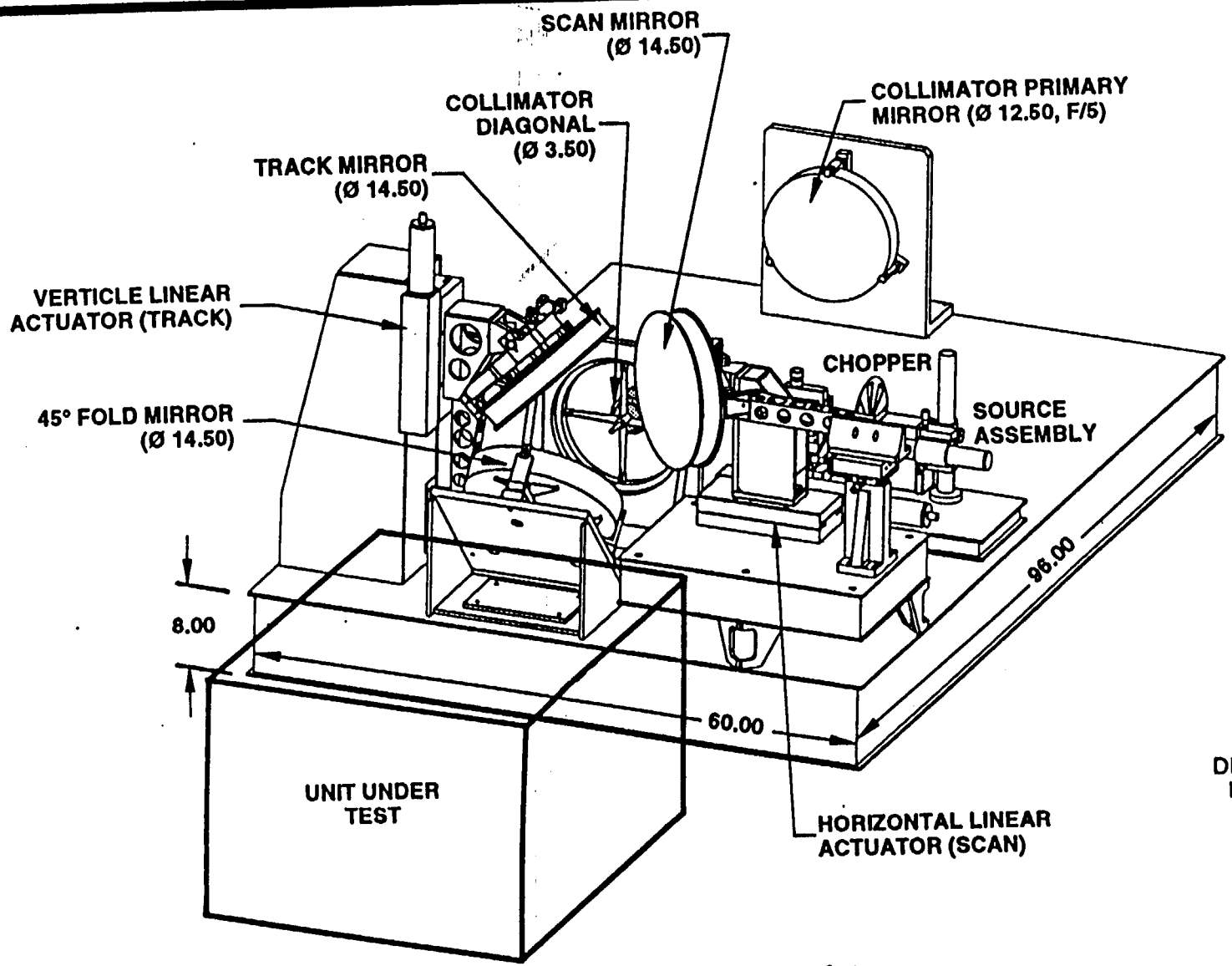

DIMENSIONS
IN INCHES

IAC IN HIGHBAY CLEAN ROOM

94-3-133

HUGHES

SANTA BARBARA RESEARCH CENTER
a subsidiary

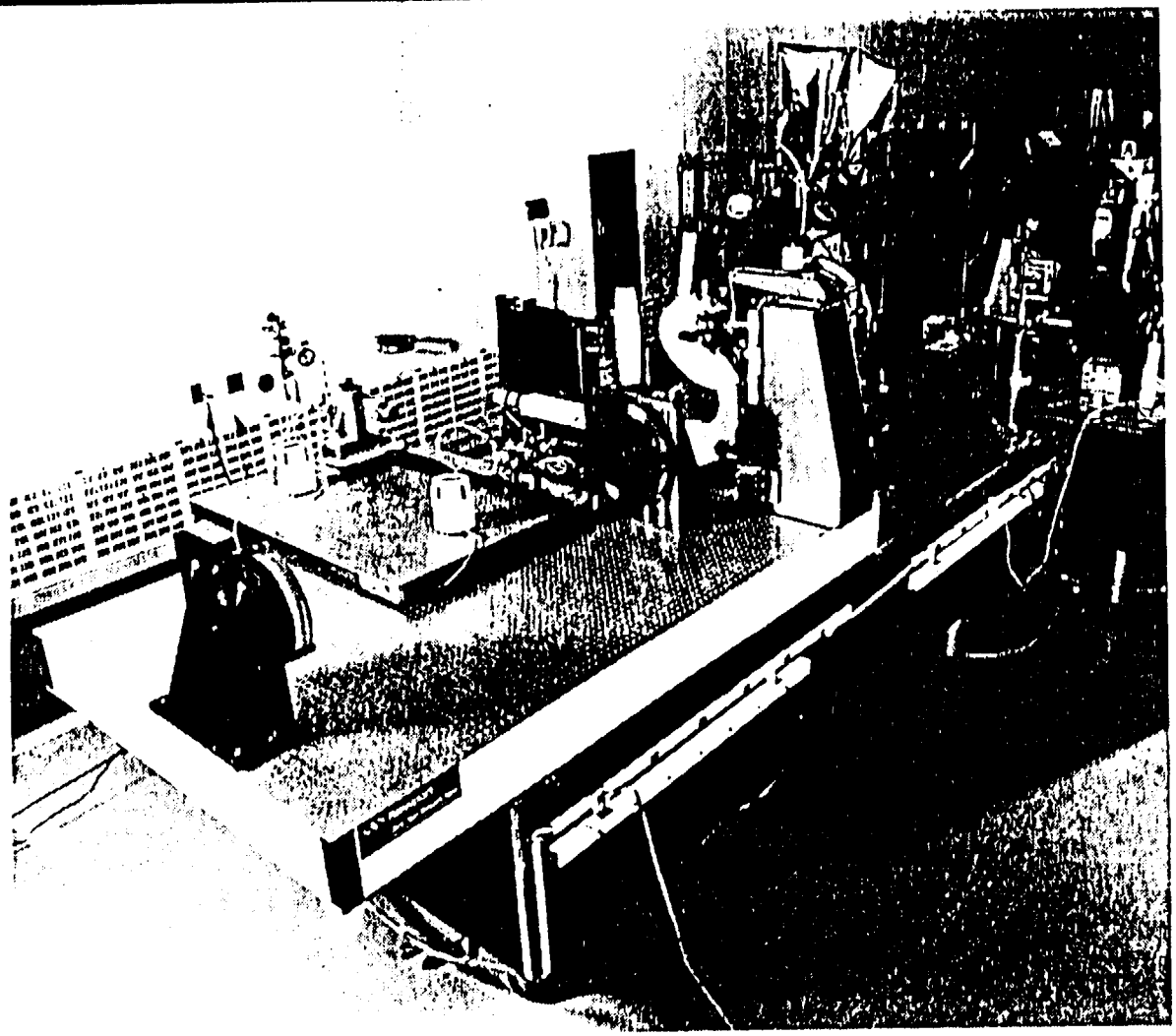

STRAY LIGHT TEST CONFIGURATION

HUGHES

SANTA BARBARA RESEARCH CENTER
a subsidiary

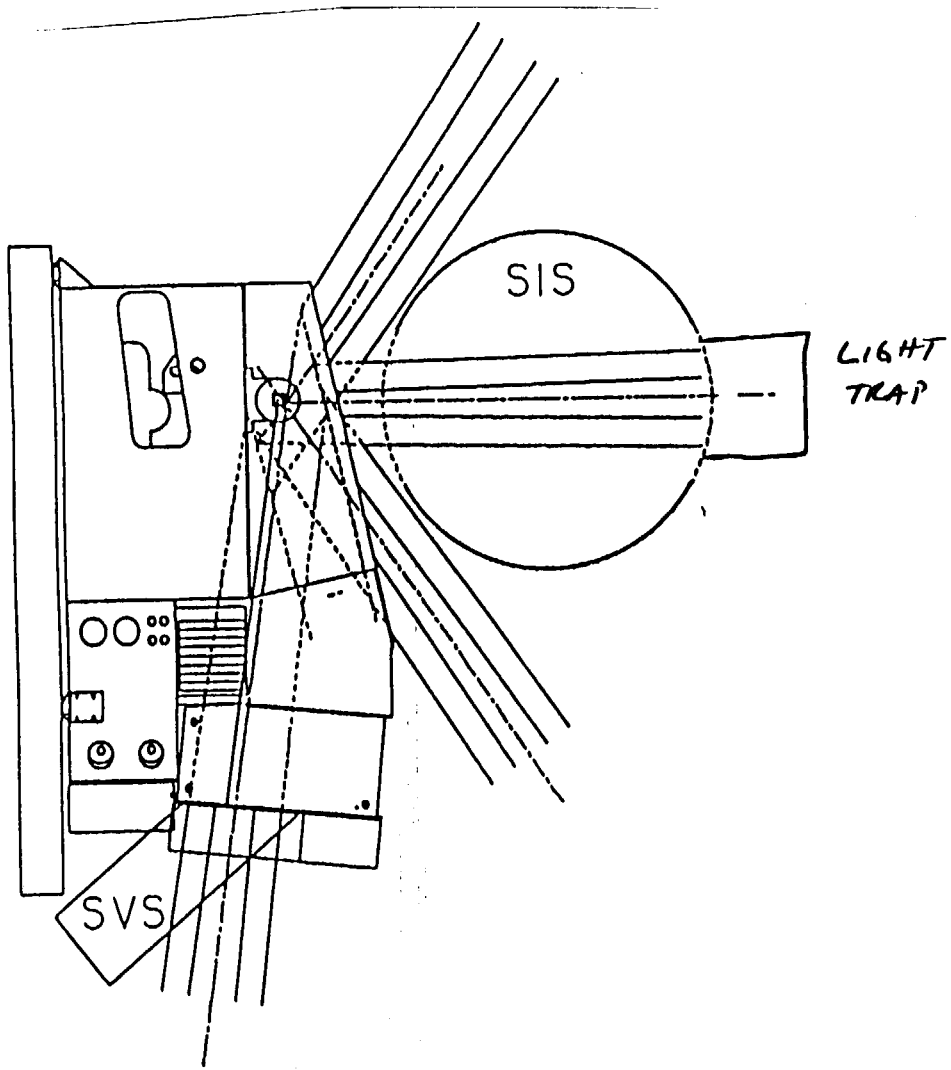

MODIS POLARIZANCE IS CHARACTERIZED WITH A STAND-ALONE POLARIZER SUBSYSTEM

HUGHES

SANTA BARBARA RESEARCH CENTER
a subsidiary

- DESIGN TBR MOVING TOWARDS REFLECTIVE APPROACH

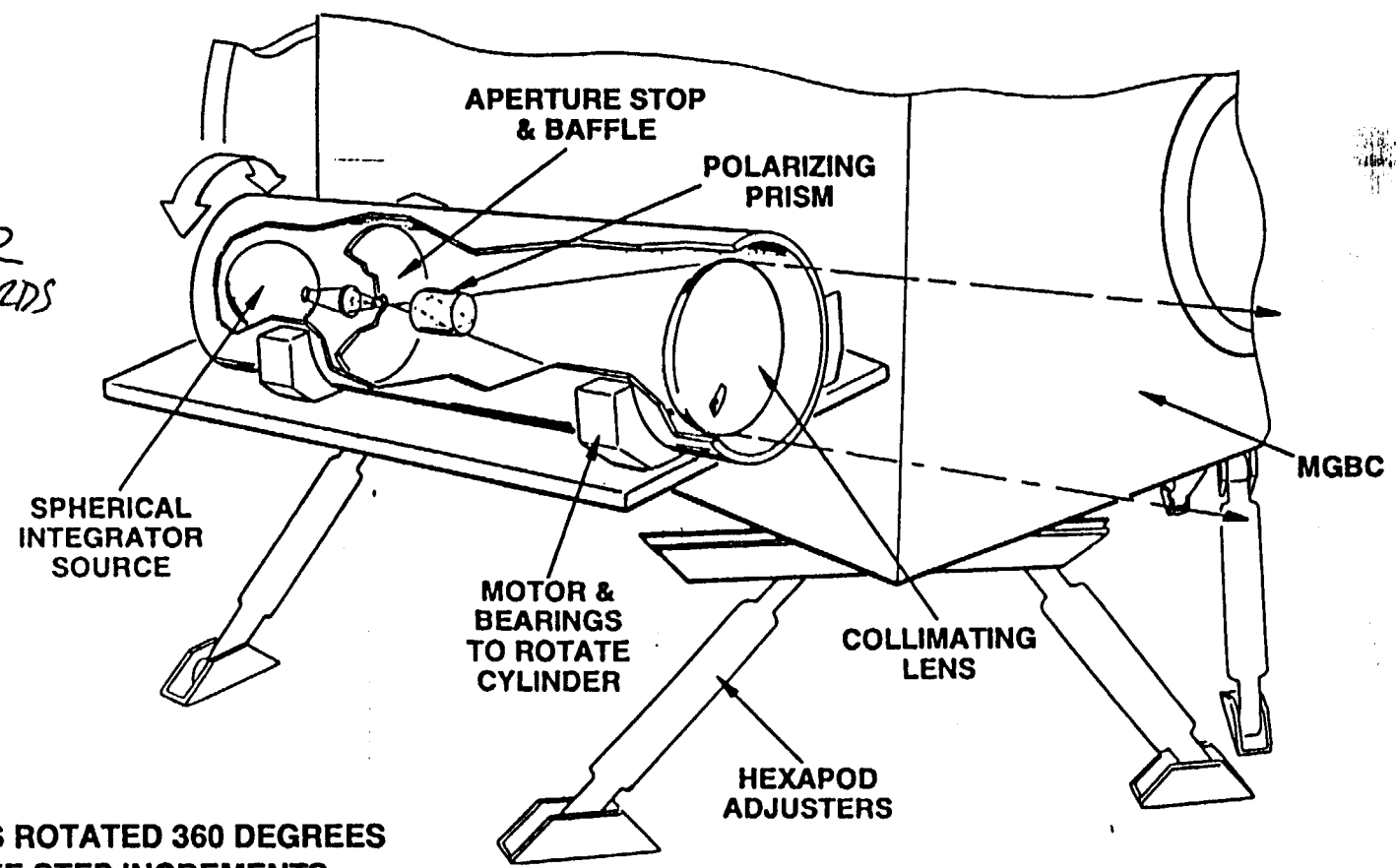

- CYLINDER IS ROTATED 360 DEGREES IN 15 DEGREE STEP INCREMENTS

Copyright 1984 Santa Barbara Research Center
PUBLISHED WORK - ALL RIGHTS RESERVED

NOTES: UNLESS OTHERWISE SPECIFIED

INTERPRET DRAWING PER DOD-STD-100.

BREAK SHARP EDGES .06 MAX.

MATERIAL AND FINISHES SHALL BE SELECTED BY VENDOR AND SUBMITTED TO SBRC FOR APPROVAL.

CLEAR APERTURE (C.A.) SHALL BE THE CENTRAL AREA Ø11.25 MIN.

SURFACES MARKED "P" SHALL BE POLISHED; ALL OTHER SURFACES FINE GRIND.

SURFACE QUALITY OF POLISHED SURFACE TO BE 60-40 PER MIL-O-13830 (PARA 3.3). INSIDE CLEAR APERTURE (C.A.), AND 100-80 OUTSIDE THE CLEAR APERTURE. SURFACE ROUGHNESS OF THE POLISHED SURFACE SHALL BE LESS THAN 5 ANGSTROMS RMS INSIDE THE CLEAR APERTURE. THE TOTAL INTEGRATED SCATTER SHALL BE 1.0% X 10E-4 WHEN MEASURED AT A WAVELENGTH OF .6328 MICROMETERS OUTSIDE INSIDE THE CLEAR APERTURE. INTEGRATION OF TOTAL INTEGRATED SCATTER SHALL BE FROM 1.5 TO 90 DEGREES. MEASUREMENTS ARE TO BE MADE IN ORTHOGONAL PAIRS AT A MINIMUM OF FIVE LOCATIONS CHOSEN TO BE CHARACTERISTIC OF THE MIRROR'S CONDITION.

ACCURACY OF THE POLISHED SURFACE SHALL BE DEFINED AS SHAPE OF A TRUE SPHERE, MAXIMUM SLOPE ERROR OF 1 WAVE PER INCH, AND 1 WAVE PEAK-VALLEY WITHIN THE CLEAR APERTURE. MEASUREMENT WAVE LENGTH SHALL BE .6328 MICRONS.

COAT ENTIRE FRONT SURFACE MARKED "P" FOR THE FOLLOWING SPECTRAL PERFORMANCE AT 0 TO 10 DEGREES ANGLE OF INCIDENCE FROM THE NORMAL:

(A) A PROTECTED SILVER COATING IS REQUIRED WHICH MEETS THE TECHNICAL REQUIREMENTS OF THIS NOTE, THE SCATTERING REQUIREMENTS OF NOTE 6 AND THE DURABILITY AND QUALITY OF NOTE 11.

(B) TO ASSURE LONG-TERM STABILITY, SBRC CONCURRENCE SHALL BE REQUIRED FOR THE SELECTION OF A COATING FACILITY. SUCH APPROVAL SHALL BE OBTAINED IN WRITING FROM SBRC BY THE MIRROR SUPPLIER BEFORE AUTHORIZING THE COATING.

THE AVERAGE REFLECTANCE AND PERFORMANCE FOR THE SBRC PSA MIRROR SHALL BE THE FOLLOWING SPECTRAL REQUIRE SHALL BE:

[illegible]	[illegible]	[illegible]	[illegible]	[illegible]
[illegible]	[illegible]	[illegible]	[illegible]	[illegible]

SPECTRAL REFLECTANCE REQUIRE

SPECTRAL REFLECTANCE REQUIRE

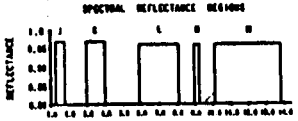

9. NO COATING JIG MARKS ALLOWED ON POLISHED SURFACE.

10. A MINIMUM OF FOUR COATING WITNESS SAMPLES SHALL BE FABRICATED WITH THE MIRROR MEETING THE FOLLOWING REQUIREMENTS:
   A. 25 MM (1.0 IN) DIAMETER X 6 MM (0.25 IN) THICK
   B. MATERIAL: PER NOTE 1
   C. POLISH ONE SIDE FLAT TO ONE WAVE, 1/4 WAVE UNCERTAINTY - .6328 MICRONS
   D. SURFACE QUALITY 60/40 PER MIL-O-13830. CLEAR APERTURE TO WITHIN 1.0 MM (0.04 IN) OF EDGE.

11. THE COATING SHALL BE SUBJECTED TO THE TEMPERATURE INFLUENCE, HUMIDITY, AND ADHERENCE TESTS OF MIL-M-13508 IN THE SEQUENCE LISTED HERE. (EXCEPT THAT THE TEMPERATURE INFLUENCE SHALL BE FROM -18°C ± 2°C TO 55°C ± 2°C (57° ± 4°F TO 131°F ± 4°F). THE HUMIDITY LEVEL SHALL BE 90% TO 95%. THE ONLY CRITERIA FOR JUDGING WHETHER THE COATED SURFACE HAS PASSED OR FAILED THESE TESTS SHALL BE:
   (A) CONFORMANCE OF COATED CLEAR APERTURE TO SURFACE QUALITY REQUIREMENTS (SCRATCH AND DIG) SPECIFIED IN NOTE 9.
   (B) CONFORMANCE OF COATED CLEAR APERTURE TO THE REFLECTANCE REQUIREMENTS OF NOTE 8
   (C) CONFORMANCE WITH TAPE ADHERENCE TEST PER MIL-M-13508.

12. REFLECTANCE, ENVIRONMENTAL AND DURABILITY TESTS MAY BE PERFORMED ON WITNESS SAMPLES PER NOTE 10 OF THE SAME MATERIAL AS, AND COATED WITH, THE DELIVERABLE HARDWARE. REFLECTANCE SHALL BE MEASURED AT AN ANGLE OF INCIDENCE BETWEEN 0 AND 10 DEGREES FROM THE NORMAL.

13. FOR THE PURPOSE OF JUDGING THE COATING PER NOTE 12, THE CLEAR APERTURE OF A WITNESS SAMPLE SHALL BE DEFINED AS A CENTRAL REGION OF THE COATED SAMPLE SURFACE HAVING DIMENSIONS EQUAL TO THE OUTSIDE DIMENSIONS OF THE SAMPLE SURFACE.

14. THE REFLECTANCE DATA, SCATTER MEASUREMENTS, ENVIRONMENTAL TEST REPORTS, AND AT LEAST TWO WITNESS SAMPLES, FROM EACH COATING RUN, MUST ACCOMPANY THE DELIVERABLE HARDWARE. CLEAN, HANDLE AND PACKAGE PER SP00003 (PARTS SHALL BE HANDLE ONLY WITH CLEAN LINT FREE GLOVES, TAGS ON HATS TO BE NON-ADHESIVE LINT FREE, GREASE FREE AND DRY). THE PACKAGE SHALL BE MARKED WITH: "OPTICAL PART, OPEN ONLY UNDER THE SUPERVISION OF THE RESPONSIBLE OPTICAL PERSONNEL".

15. IDENTIFICATION: DAG AND TAG WITH 11323-700. DO NOT MARK PART.

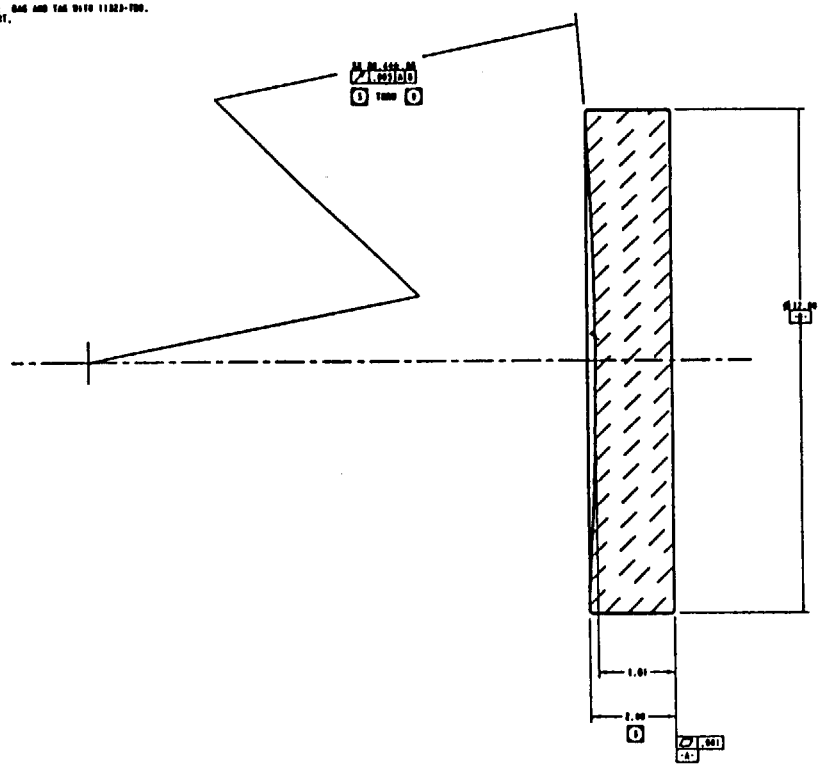

CAD PREPARED DRAWING USING Pro/ENGINEER 11.0
NOT TO BE MANUALLY ALTERED.

DIMENSIONS ARE IN INCHES		
± .01	± .005	± 0.1°
D		

DRAWN	11/6/2	[illegible]
CHK		
APPLICATION		

CONTRACT NO NAS5-30800

SANTA BARBARA RESEARCH CENTER
A SUBSIDIARY OF HUGHES AIRCRAFT COMPANY
GOLETA, CALIFORNIA

MIRROR, PRIMARY, PSA-MODIS

SIZE E | CODE IDENT NO 11323 | DWG NO 219273

SCALE | SHEET

9710-HEER

C7782

MODIS TEST LAYOUT IN CLASS 10,000 CLEAN ROOM

HUGHES

SANTA BARBARA RESEARCH CENTER
a subsidiary

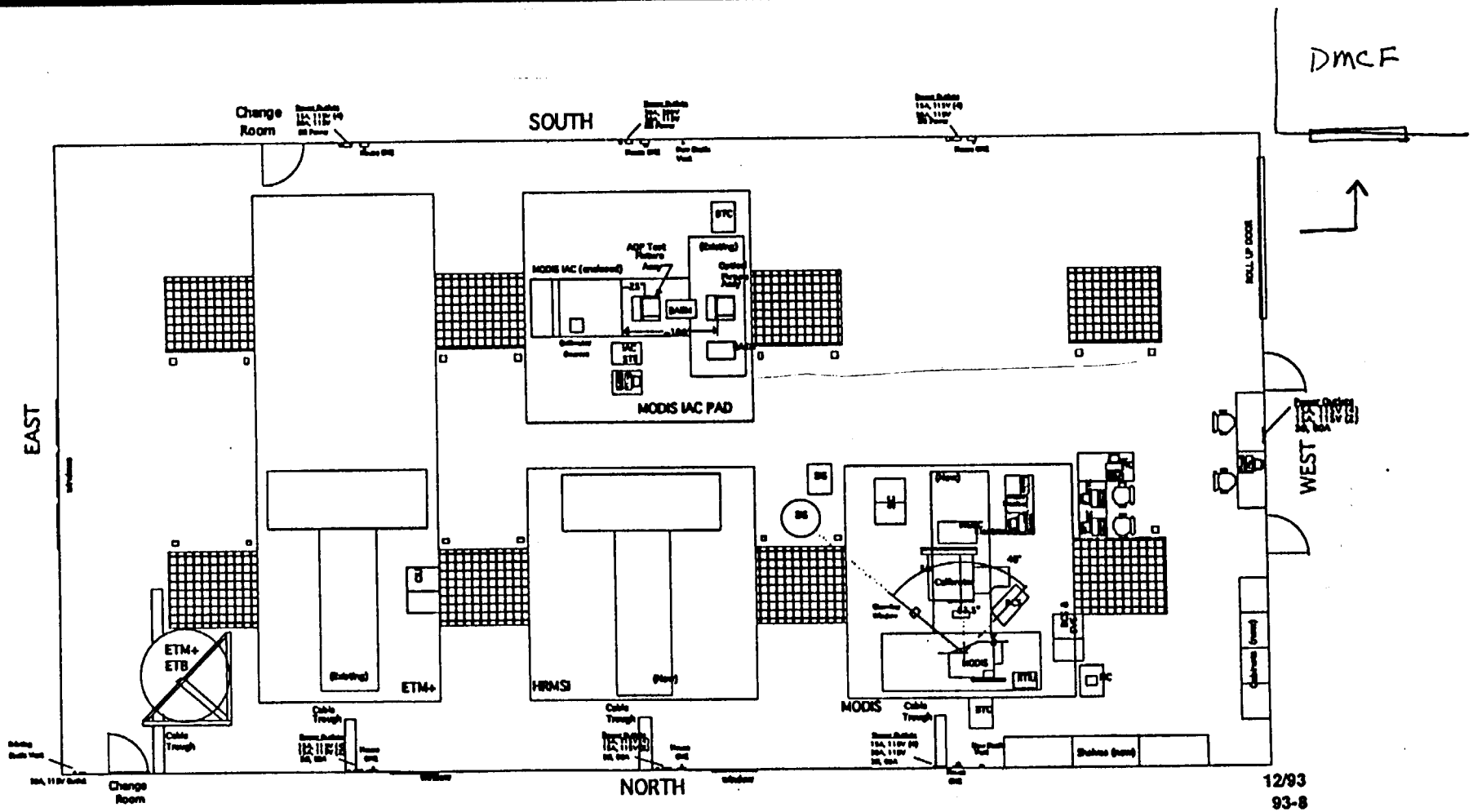

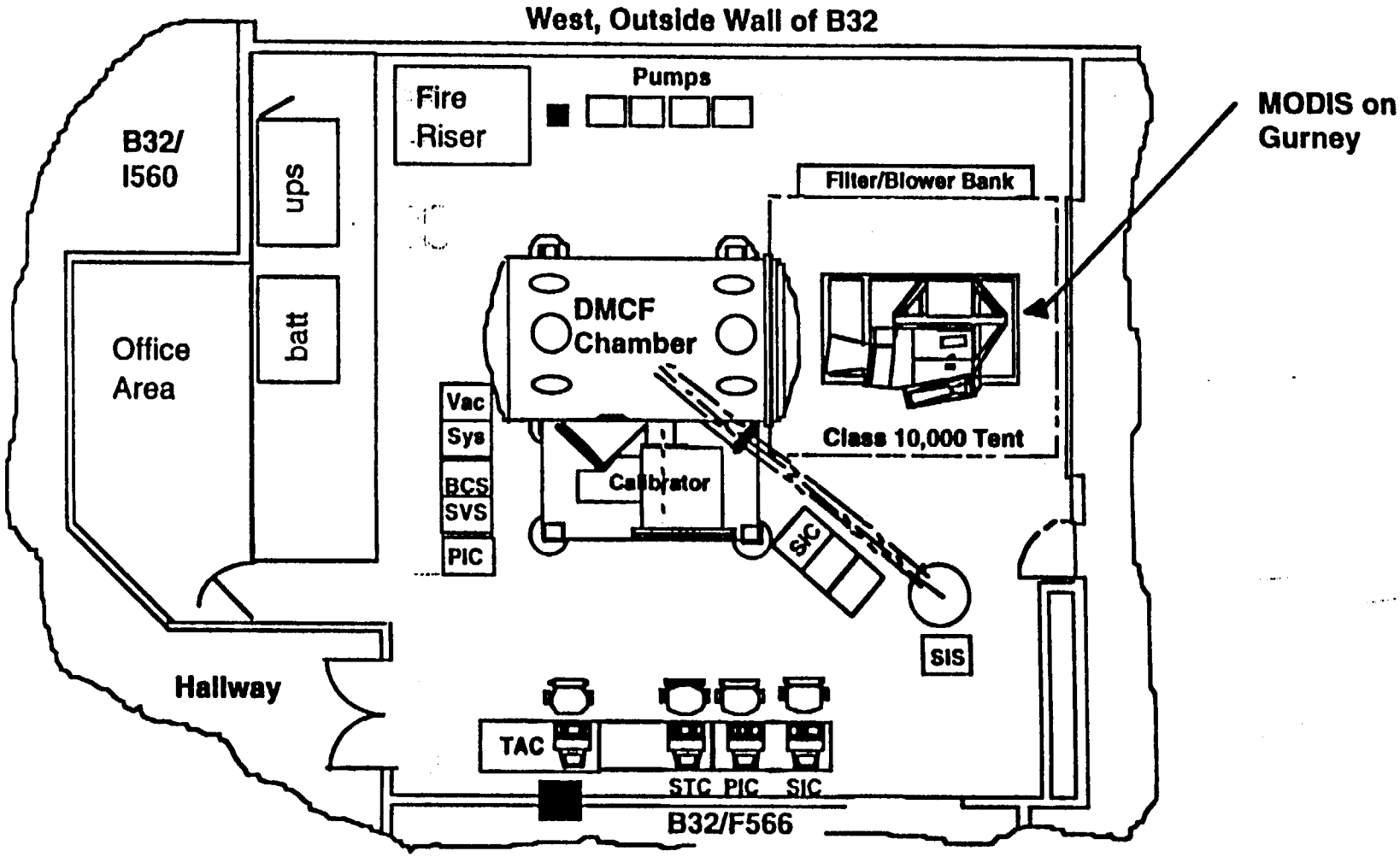

Dedicated MODIS Calibration Facility

Building B32/RoomG562

FIGURE 1

SPC93-0000

SB 0122B PC REV JUNE 90 (FRM90-0792)

SIZE	CAGE CODE	NUMBER
A	11323	152891

SCALE | REV 1 | SHEET 20 OF 37

DMCF Can Accommodate IAC

HUGHES

SANTA BARBARA RESEARCH CENTER
a subsidiary

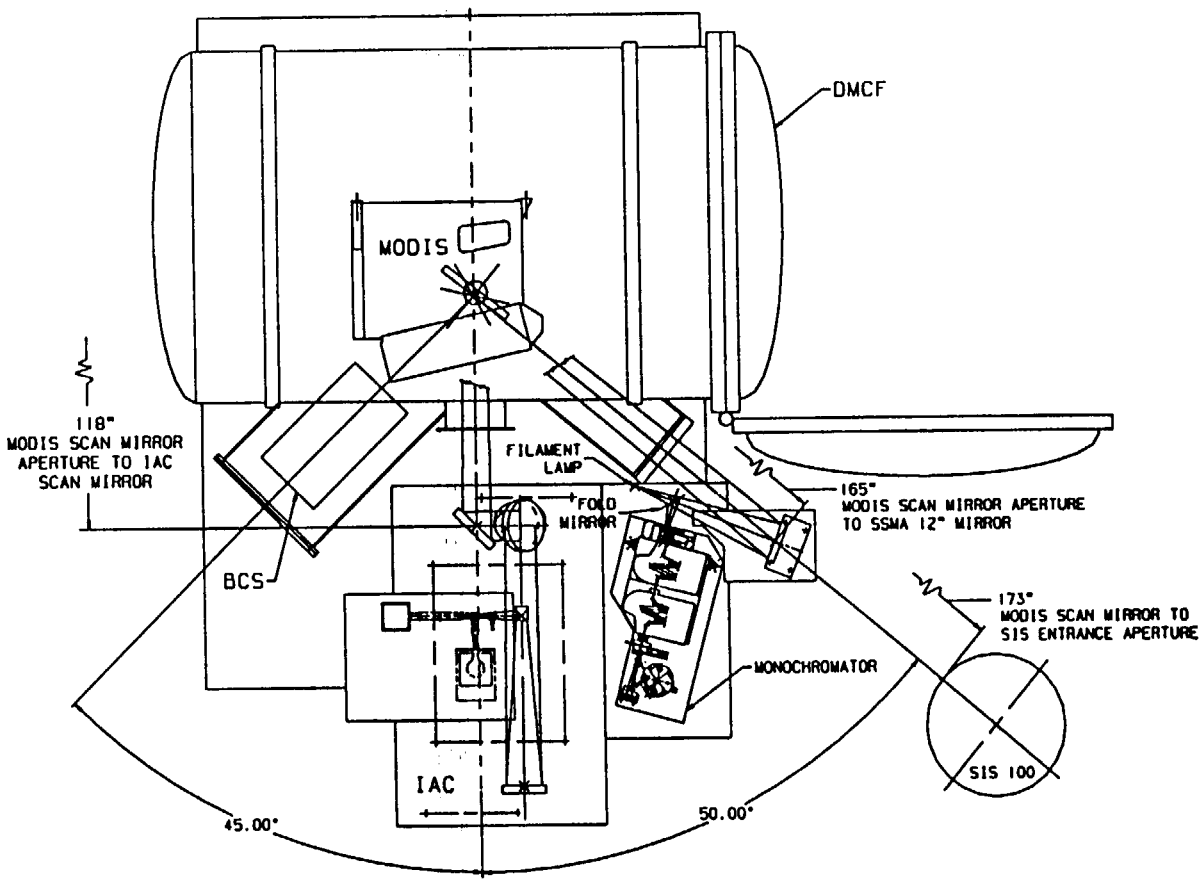

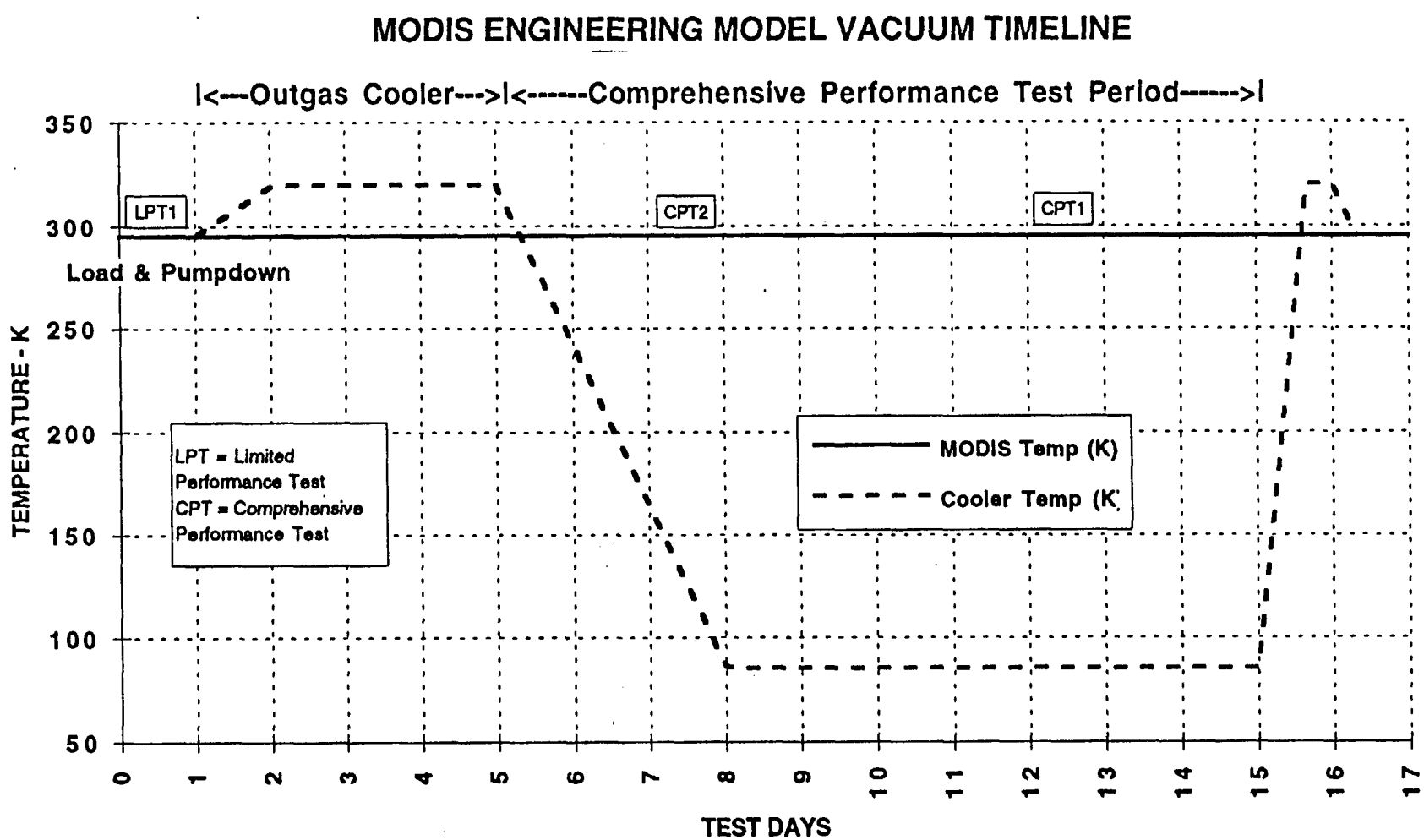
MODIS ENGINEERING MODEL VACUUM TIMELINE
|<---Outgas Cooler--->|<------Comprehensive Performance Test Period------>|
LPT1
CPT2
CPT1
Load & Pumpdown
LPT = Limited Performance Test
CPT = Comprehensive Performance Test
MODIS Temp (K)
Cooler Temp (K)
TEMPERATURE - K
350
300
250
200
150
100
50
0
1
2
3
4
5
6
7
8
9
10
11
12
13
14
15
16
17
TEST DAYS

MODIS PROTOFLIGHT MODEL THERMAL-VACUUM TIMELINE

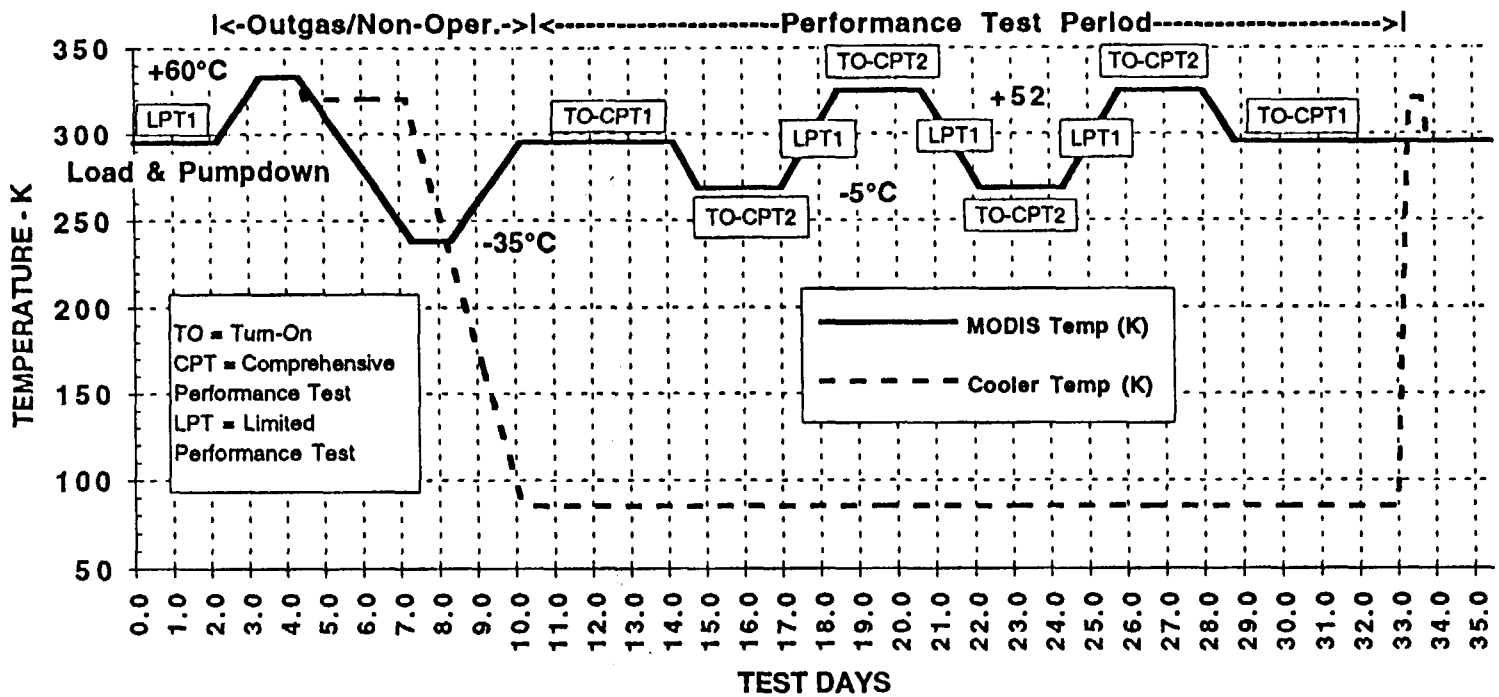

Remaining Questions

HUGHES

SANTA BARBARA RESEARCH CENTER
a subsidiary

- Can a suitable 16" window be found to cover all spectral regions? (Assuming we can live without a few bands in VIS & LWIR)
- Polarization, Mirror Reflectance, & Pointing are only parameters to be measured across the scan line. Any others needed?
- How do we measure IR scatter/ghosting without MGBC on EM? Will IAC work?
- How long will each of these tests take? What special fixturing is required?
- What are restrictions on software for data reduction? Can we re-use EM integration and evaluation software for PF?

Systems Evaluation of EM Replan

HUGHES
SANTA BARBARA RESEARCH CENTER
a subsidiary

- Early Testing Reduces Overall Technical Risk
- Conversion of Structural Model: Moderate Risk
- Delete Cube and Pointing Measurements, EMI/EMC: Low Risk
- Delete One-g Gravity Release Assessment: Moderate Risk
  Perform on PF; Difficulties Encountered Will Show Up Late
- Maintain Polarization Measurements
- Minimize Ambient Radiometic Testing. IR Bands Invalid Due to High Backgrounds. Emphasize VIS, NIR, SWIR Tests
- Maintain Thermal/Vacuum Radiometric Tests: Necessary to Evaluate Cold Shielding & Cooler Performance. Emphasize IR Bands
- Thermal Balance: Single Configuration
- IAC for Registration Tests Before and in T/V (Dewar Stem Shift)
- Perform Spectral Tests Before and in T/V (Limited Spectral in T/V)
- Maintain Stray Light Tests on EM